पेटेंट कार्यालय
शासकीय जर्नल

OFFICIAL JOURNAL
OF
THE PATENT OFFICE

निर्गमन सं. 12/2014	शुक्रवार	दिनांक: 21/03/2014
ISSUE NO. 12/2014	FRIDAY	DATE: 21/03/2014

पेटेंट कार्यालय का एक प्रकाशन

PUBLICATION OF THE PATENT OFFICE

INTRODUCTION

In view of the recent amendment made in the Patents Act, 1970 by the Patents (Amendment) Act, 2005 effective from 01st January 2005, the Official Journal of The Patent Office is required to be published under the Statute. This Journal is being published on weekly basis on every Friday covering the various proceedings on Patents as required according to the provision of Section 145 of the Patents Act 1970. All the enquiries on this Official Journal and other information as required by the public should be addressed to the Controller General of Patents, Designs & Trade Marks. Suggestions and comments are requested from all quarters so that the content can be enriched.

(**Chaitanya Prasad**)
CONTROLLER GENERAL OF PATENTS, DESIGNS & TRADE MARKS

21ST MARCH, 2014

CONTENTS

THE PATENT OFFICE
KOLKATA, 21/03/2014
Address of the Patent Offices/Jurisdictions
The following are addresses of all the Patent Offices located at different places having their Territorial Jurisdiction on a Zonal basis as shown below:-

1	Office of the Controller General of Patents, Designs & Trade Marks, Boudhik Sampada Bhavan, Near Antop Hill Post Office,S.M.Road,Antop Hill, Mumbai – 400 037 Phone: (91)(22) 24123311, Fax : (91)(22) 24123322 E-mail: cgpdtm@nic.in	4	The Patent Office, Government of India, Intellectual Property Rights Building, G.S.T. Road, Guindy, Chennai – 600 032. Phone: (91)(44) 2250 2081-84 Fax : (91)(44) 2250 2066 E-mail: chennai-patent@nic.in ❖ The States of Andhra Pradesh, Karnataka, Kerala, Tamil Nadu and the Union Territories of Puducherry and Lakshadweep.
2	The Patent Office, Government of India, Boudhik Sampada Bhavan, Near Antop Hill Post Office,S.M.Road,Antop Hill, Mumbai – 400 037 Phone: (91)(22) 24137701 Fax: (91)(22) 24130387 E-mail: mumbai-patent@nic.in ❖ The States of Gujarat, Maharashtra, Madhya Pradesh, Goa and Chhattisgarh and the Union Territories of Daman and Diu & Dadra and Nagar Haveli	5	The Patent Office (Head Office), Government of India, Boudhik Sampada Bhavan, CP-2, Sector –V, Salt Lake City, Kolkata- 700 091 Phone: (91)(33) 2367 1943/44/45/46/87 Fax: (91)(33) 2367 1988 E-Mail: kolkata-patent@nic.in ❖ Rest of India
3	The Patent Office, Government of India, Boudhik Sampada Bhavan, Plot No. 32., Sector-14, Dwarka, New Delhi – 110075 Phone: (91)(11) 2808 1921 – 25 Fax: (91)(11) 2808 1920 & 2808 1940 E.mail: delhi-patent@nic.in ❖ The States of Haryana, Himachal Pradesh, Jammu and Kashmir, Punjab, Rajasthan, Uttar Pradesh, Uttaranchal, Delhi and the Union Territory of Chandigarh.		

Website: www.ipindia.nic.in
www.patentoffice.nic.in

All applications, notices, statements or other documents or any fees required by the Patents Act, 1970 and The Patents (Amendment) Act, 2005 or by the Patents (Amendment) Rules, 2006 will be received only at the appropriate offices of the Patent Office.

Fees: The Fees may either be paid in cash or may be sent by Bank Draft or Cheques payable to the Controller of Patents drawn on a scheduled Bank at the place where the appropriate office is situated.

पेटेंट कार्यालय

कोलकाता, दिनांक 21/03/2014

क्कार्यालयों के क्षेत्राधिकार के पते

विभिन्न जगहों पर स्थित पेटेंट कार्यालय के पते आंचलिक आधार पर दर्शित उनके प्रादेशिक अधिकार क्षेत्र के साथ नीचे दिए गए है:-

1	कार्यालय : महानियंत्रक, एकस्व, अभिकल्प तथा व्यापार चिह्न, एंटोप हिल डाकघर के समीप, एस. एम. रोड, एंटोप हिल, मुम्बई- 400 037, भारत, फोन: (91) (22) 24123311 फ़ैक्स: (91) (22) 24123322 ई. मेल: cgpdtm@nic.in	4	पेटेंट कार्यालय, भारत सरकार इंटेलेक्चुअल प्रॉपर्टी राइट्स बिल्डिंग, इंडस्ट्रियल इस्टेट एसआईडीसीओ आरएमडी गोडाउन एरिया एडजसेन्ट टु ईगल फ्लास्क, जी. एस. टी. रोड, गायन्डी चेन्नई - 600 032. फोन: (91)(44) 2250 2081-84 फ़ैक्स: (91)(44) 2250-2066 ई. मेल: chennai-patent@nic.in ❖ आन्ध्र प्रदेश, कर्नाटक, केरल, तमिलनाडु तथा पुडुचेरी राज्य क्षेत्र एवं संघ शासित क्षेत्र, लक्षदीप
2	पेटेंट कार्यालय, भारत सरकार बौद्धिक संपदा भवन, एंटोप हिल डाकघर के समीप, एस. एम. रोड, एंटोप हिल, मुम्बई- 400 037, फोन: (91) (22) 24137701 फ़ैक्स: (91) (22) 24130387 ई. मेल: Mumbai-patent@nic.in ❖ गुजरात, महाराष्ट्र, मध्य प्रदेश, गोवा तथा छत्तीसगढ़ राज्य क्षेत्र एवं संघ शासित क्षेत्र, दमन तथा दीव, दादर और नगर हवेली.	5	पेटेंट कार्यालय, भारत सरकार कोलकाता, (प्रधान कार्यालय) बौद्धिक संपदा भवन, सीपी-2, सेक्टर- V, साल्ट लेक सिटी, कोलकाता-700 091, भारत. फोन: (91)(33) 2367 1943/44/45/46/87 फ़ैक्स:/Fax: (91)(33) 2367 1988 ई. मेल: kolkata-patent@nic.in ❖ भारत का अवशेष क्षेत्र
3	पेटेंट कार्यालय, भारत सरकार बौद्धिक संपदा भवन, प्लॉट सं. 32, सेक्टर- 14, द्वारका, नई दिल्ली- 110 075. फोन: (91)(11) 2808 1921-25 फ़ैक्स: (91)(11) 2808 1920, 2808 1940 ई. मेल: delhi-patent@nic.in हरियाणा, हिमाचल प्रदेश, जम्मू तथा कश्मीर, पंजाब,राजस्थान, उत्तर प्रदेश, दिल्ली तथा उत्तरांचल राज्य क्षेत्रों, एवं संघ शासित क्षेत्र चंडीगढ़		

वेबसाइट: **http://www.ipindia.nic.in**

www.patentoffice.nic.in

पेटेंट अधिनियम, 1970 तथा पेटेंट (संशोधन) अधिनियम, 2005 अथवा पेटेंट (संशोधन) नियम, 2006 द्वारा वांछित सभी आवेदन, सूचनाए, विवरण या अन्य दस्तावेज़ या कोई शुल्क पेटेंट कार्यालय के केवल उपयुक्त कार्यालय में स्वीकृत होंगे।

शुल्क: शुल्क या तो नगद रूप में या Controller of Patents के नाम में देय बैंक ड्राफ्ट या चेक के द्वारा भेजी जा सकती है जो उसी स्थान के किसी अनुसूचित बैंक में प्रदत्त हो जहाँ उपयुक्त कार्यालय स्थित है ।

SPECIAL NOTICE

18 Months publication as required under Section 11A of the Patents Act, 1970 as amended by the Patents (Amendment) Act, 2005.

Notice is hereby given that any person at any time before the grant of Patent may give representation by way of opposition to the Controller of Patents at appropriate office on the ground and in a manner specified under section 25(1) of the Patents (Amendment) Act, 2005 read with Rule 55 of the Patents (Amendment) Rules, 2006.

Notice is also given that if any interested person requests for copies of the complete specification, drawing and abstract of any application already published, the photocopy of the same can be supplied by the Patent Office as per the jurisdiction on payment of prescribed fees of Rs.4/- per page. If any further details are required to be obtained, the same can be provided by the respective Patent Offices on request.

(**Chaitanya Prasad**)
CONTROLLER GENERAL OF PATENTS, DESIGNS & TRADE MARKS

SPECIAL NOTICE

Under the new provision of the Patents Act, 1970 as amended by the Patents (Amendment) Act, 2005 and Rules there under, Publication of the matter relating to Patents in the Official Gazette of India Part III, Section 2 has been discontinued and instead The Official Journal of the Patent Office is being published containing all the activities of The Patent Office such as publication of all the patent applications after 18th months , grant of patents & all other information in respect of the proceedings as required under the provisions of the Patents (Amendment) Act, 2005 and Rules thereunder on weekly basis on every **Friday**.

The Journal is uploaded in the website every Friday. So Paper form and CD-ROM form of the Journal are discontinued from 01/01/2009.

SPECIAL NOTICE

Every effort is being taken to publish all the patent applications under section 11(A) of the Patents Act. However, if duplication of publication of any application is found, then earlier date of publication will be taken for the purpose of provisional protection for applicant and Patent Office will grant Patent not before six months from the date of second publication, provided that there is there is no third party representation.

PUBLIC NOTICE FOR ENTRIES IN PATENT REGISTER U/S (58)(3)
IN PATENT 197257 (DELHI)

The public is hereby informed that for Patent No. 197257 granted in patent application No. 2769/DEL/1997, and published u/s 43(2) on 22/06/2007 in Official Journal No. 25/2007, the earlier granted specification stands amended as directed by Hon'ble Intellectual Appellate Board (IPAB) vide Order No.139/2012, Dated 01st June 2012 in OA/4/2007/PT/DEL and OA/17/2010/PT/DEL.

Controller has issued order in file for taking in record the amended specification found in order for grant on 09.02.2005 by substituting the word roller with pad in specification and claims and necessary entry and reference of the same in patent register and publication in official journal accordingly.

Early Publication:

The following patent applications have been published under section 11A (2) of The Patents (Amendment) Act 2005 and rule 24A of The Patents (Amendment) Rules, 2006. Any person may file representation by way of opposition to the Controller of Patents at the appropriate office against the grant of the patent in the prescribed manner under section 25(1) of the Patents (Amendment) Act 2005 read with the rule 55 of The Patents (Amendment) Rules, 2006:

(12) PATENT APPLICATION PUBLICATION

(19) INDIA

(21) Application No.758/DELNP/2014 A

(22) Date of filing of Application :03/02/2014

(43) Publication Date : 21/03/2014

(54) Title of the invention : EASY PULL BOTTLE CAP

(51) International classification	:B65D 41/32
(31) Priority Document No	:13/267264
(32) Priority Date	:06/10/2011
(33) Name of priority country	:U.S.A.
(86) International Application No	:PCT/US2012/053131
Filing Date	:30/08/2012
(87) International Publication No	:WO 2013/052219
(61) Patent of Addition to Application Number	:NA
Filing Date	:NA
(62) Divisional to Application Number	:NA
Filing Date	:NA

(71)**Name of Applicant :**

1)FRISHMAN Abe

Address of Applicant :2924 Cambridgeshire Carrollton TX 75007 U.S.A.

(72)**Name of Inventor :**

1)FRISHMAN Abe

(57) Abstract :

A crown for a bottle or other container has a top portion and an annular skirt that descends contiguously from the top portion. An opener assembly and an arrangement of frangible scoring lines on the crown allow for ease of opening the bottle or container. Corrugated embodiments provide material strengthening for a reduced gauge crown.

No. of Pages : 65 No. of Claims : 20

(12) PATENT APPLICATION PUBLICATION
(19) INDIA
(22) Date of filing of Application :17/02/2014
(21) Application No.440/DEL/2014 A
(43) Publication Date : 21/03/2014

(54) Title of the invention : SYSTEMS AND METHODS FOR PROVIDING ADVANCED SECURITY WITH MONITORING AND AUTOMATION CAPABILITIES OVER A GLOBAL NETWORK

(51) International classification :G06F
(31) Priority Document No :NA
(32) Priority Date :NA
(33) Name of priority country :NA
(86) International Application No :NA
Filing Date :NA
(87) International Publication No : NA
(61) Patent of Addition to Application Number :NA
Filing Date :NA
(62) Divisional to Application Number :NA
Filing Date :NA

(71)**Name of Applicant :**
1)Shashank Maheshwari
Address of Applicant :I 1612, CR Park, Near CR Park Police Station, New Delhi 110019 India
(72)**Name of Inventor :**
1)Shashank Maheshwari

(57) Abstract :
An automated system for providing advanced security with monitoring and automation capabilities over a network arrangement comprises, multiple sensors configured to capture any combination of various parameters and identity motion movement in a vicinity of multiple data collecting devices installed or attached to nearby facilities; a central monitoring and detecting device in communication with the sensors and with a means for data transmission and communication. The system further comprises an application configured to execute on a handheld device, and a controlling server coupled to the central monitoring and detecting device, the remote station and the application.

No. of Pages : 24 No. of Claims : 15

(12) PATENT APPLICATION PUBLICATION
(19) INDIA
(22) Date of filing of Application :14/02/2014
(21) Application No.425/DEL/2014 A
(43) Publication Date : 21/03/2014

(54) Title of the invention : LAMITUBE MAKING MACHINE

(51) International classification :B31C
(31) Priority Document No :NA
(32) Priority Date :NA
(33) Name of priority country :NA
(86) International Application No :NA
Filing Date :NA
(87) International Publication No : NA
(61) Patent of Addition to Application Number :NA
Filing Date :NA
(62) Divisional to Application Number :NA
Filing Date :NA

(71)**Name of Applicant :**
1)MR. PRANAV ARORA
Address of Applicant :MANPURA, BADDI-173205, HIMACHAL PRADESH, INDIA.
(72)**Name of Inventor :**
1)MR. PRANAV ARORA

(57) Abstract :
The present invention is equipment that can be used to make lamitubes in various industries such as packing creams, gels, ointment, in pharmaceuticals, cosmetics, food processing and allied industries.

No. of Pages : 9 No. of Claims : 7

(12) PATENT APPLICATION PUBLICATION
(19) INDIA
(22) Date of filing of Application :30/12/2013
(21) Application No.3821/DEL/2013 A
(43) Publication Date : 21/03/2014

(54) Title of the invention : LPG CAR ME AVERAGE BADANE KA

(51) International classification :F02D
(31) Priority Document No :NA
(32) Priority Date :NA
(33) Name of priority country :NA
(86) International Application No :NA
Filing Date :NA
(87) International Publication No : NA
(61) Patent of Addition to Application Number :NA
Filing Date :NA
(62) Divisional to Application Number :NA
Filing Date :NA

(71)**Name of Applicant :**
1)DHARAMPAL RAJORIYA
Address of Applicant :B-1, ANAND PURI, JAIPUR-4 Rajasthan India
(72)**Name of Inventor :**
1)DHARAMPAL RAJORIYA

(57) Abstract :
If L.P.G & C.N.G. vehicle is driven by mixing a little amount of diesel then the running cost is reduced by 40% to 50%.

No. of Pages : 13 No. of Claims : 5

(12) PATENT APPLICATION PUBLICATION
(19) INDIA
(22) Date of filing of Application :19/06/2012
(21) Application No.805/DEL/2012 A
(43) Publication Date : 21/03/2014

(54) Title of the invention : A PROCESS FOR THE SYNTHESIS OF MONODISPERSED GOLD NANOPARTICLES IN A SINGLE-STEP PROCESSING USING BROMELAIN

(51) International classification :C07C
(31) Priority Document No :NA
(32) Priority Date :NA
(33) Name of priority country :NA
(86) International Application No :NA
Filing Date :NA
(87) International Publication No :NA
(61) Patent of Addition to Application Number :NA
Filing Date :NA
(62) Divisional to Application Number :NA
Filing Date :NA

(71)**Name of Applicant :**
1)MOHD. SAJID KHAN
Address of Applicant :FACULTY ROOM NO. 3, DEPARTMENT OF BIOTECHNOLOGY, INTEGRAL UNIVERSITY, DASAULI, KURSI ROAD, LUCKNOW-226026, Uttar Pradesh India
2)SAYED MOHD. DANISH RIZVI
(72)**Name of Inventor :**
1)MOHD. SAJID KHAN
2)SAYED MOHD. DANISH RIZVI

(57) Abstract :
The present invention relates to the method for producing gold nanoparticles having readily controlled sizes using Bromelain as both reducing and capping agent. Furthermore this invention will not only synthesize the stabilized gold nanoparticles but also provide an improved anticancer preparation of Bromelain.

No. of Pages : 17 No. of Claims : 10

(12) PATENT APPLICATION PUBLICATION
(19) INDIA
(22) Date of filing of Application :05/03/2014
(21) Application No.1108/CHE/2014 A
(43) Publication Date : 21/03/2014

(54) Title of the invention : NANO CATALYTIC INSTANT WATER CONVERTER

(51) International classification :C02F1/00
(31) Priority Document No :NA
(32) Priority Date :NA
(33) Name of priority country :NA
(86) International Application No :NA
Filing Date :NA
(87) International Publication No : NA
(61) Patent of Addition to Application Number :NA
Filing Date :NA
(62) Divisional to Application Number :NA
Filing Date :NA

(71)**Name of Applicant :**
1)BANDARU SITARAO
Address of Applicant :PLOT-118, FLAT-4D, DOYE VILLA, SRINAGAR COLONY, HYDERABAD - 500 073 Andhra Pradesh India
(72)**Name of Inventor :**
1)BANDARU SITARAO
2)MOLUGU BHARRATH
3)CHINTAKRINDI JAGAN MOHAN RAO

(57) Abstract :
As the water available from the Bore wells and other resources is neither potable nor can be used directly for industrial usage like steam boilers cooling towers and other refrigeration purposes. If the same water if passed through the NANO CATALITIC INSTANT WATER CONVERTER most of the physical properties of the above said water shall be changed by particle division into microns and the hardness in terms of calcium carbonate gets changed from calcite condition to aragonite and the hardness of the scales becomes smoother and can easily be removed or eliminated with the force of flow of water and the bio film formation which is a food source for algae gets removed by providing a small electrical charge of Dc supply with mille amps of power. The bio film formation gets avoided and the cohesiveness are the molecules of the compounds dissolved in water gets weakened and it will be easy for subsequent operations of this water either in RO plant or DM plant and the maintenance cost shall get reduced abruptly and thus the consumption of chemicals gets reduced drastically. In agricultural sector salinity of soil gets reduced by using this converter and the osmosis of the earth increases and the penetration of the water through the soil to the plant get increased and the yield also increases.

No. of Pages : 68 No. of Claims : 17

(12) PATENT APPLICATION PUBLICATION
(19) INDIA
(22) Date of filing of Application :10/03/2014
(21) Application No.1215/CHE/2014 A
(43) Publication Date : 21/03/2014

(54) Title of the invention : DTMF CONTROL LOGIC FOR WINDSHIELD WIPER AND WASHER SYSTEM

(51) International classification :H04M1/00
(31) Priority Document No :NA
(32) Priority Date :NA
(33) Name of priority country :NA
(86) International Application No :NA
Filing Date :NA
(87) International Publication No : NA
(61) Patent of Addition to Application Number :NA
Filing Date :NA
(62) Divisional to Application Number :NA
Filing Date :NA

(71)**Name of Applicant :**
1)VIMALKUMAR C R
Address of Applicant :VISHNUSREE PERUMKULANGARA, KOTTAYI (PO), PALAKKAD - 678 572 Kerala India
(72)**Name of Inventor :**
1)VIMALKUMAR C R

(57) Abstract :
The present invention disclosed herein relates to vehicle communication and control system that can be readily installed in a vehicle and utilizes minimal additional wiring. It is a DTMF based system for Wind shield wiper and washer device especially for automobiles. Digital audio clips made out of DTMF tones control the windshield wiper & washer timing. The DTMF audio clip includes DTMF tones in a preset time mode. The audio clip works as a controlled logic to control electrical devices of automobiles. It is applicable for windshield wiper and washer motors; automobiles with no intermittent windshield wipers could also be enabled with customized time shift wiper.

No. of Pages : 11 No. of Claims : 7

(12) PATENT APPLICATION PUBLICATION
(19) INDIA
(22) Date of filing of Application :10/03/2014
(21) Application No.1217/CHE/2014 A
(43) Publication Date : 21/03/2014

(54) Title of the invention : SYSTEMS AND METHODS FOR BUFFER STATUS REPORTING IN WIRELESS COMMUNICATION SYSTEMS

(51) International classification :H04L12/00
(31) Priority Document No :NA
(32) Priority Date :NA
(33) Name of priority country :NA
(86) International Application No :NA
Filing Date :NA
(87) International Publication No : NA
(61) Patent of Addition to Application Number :NA
Filing Date :NA
(62) Divisional to Application Number :NA
Filing Date :NA

(71)**Name of Applicant :**
1)WIPRO LIMITED
Address of Applicant :Doddakannelli, Sarjapur Road, Bangalore 560035, Karnataka, India.
(72)**Name of Inventor :**
1)AVIJIT MANNA
2)SAPTARSHI CHAUDHURI

(57) Abstract :
A method and system for efficient buffer status reporting at a base station is provided. The method may include identifying a transmission opportunity associated with a first protocol layer of the base station, where the transmission opportunity indicates a transmission capacity of the base station. The method may further include determining, via one or more hardware processors, a time interval for sending a buffer status report from a second protocol layer of the base station to the first protocol layer based on at least the transmission opportunity. The method may further include determining, via the one or more hardware processors, an expected buffer occupancy based on at least the time interval and a packet incoming rate associated with downlink packets, and sending the buffer status report from the second protocol layer to the first protocol layer based on at least the time interval.

No. of Pages : 30 No. of Claims : 21

(12) PATENT APPLICATION PUBLICATION
(19) INDIA
(22) Date of filing of Application :28/02/2014
(21) Application No.1061/CHE/2014 A
(43) Publication Date : 21/03/2014

(54) Title of the invention : AN IMPROVED DEALS SHARING SYSTEM AND METHOD FOR FINDING A PARTNER TO BUY PRODUCTS AND AVAIL DISCOUNTS ASSOCIATED

(51) International classification :G06Q30/00
(31) Priority Document No :NA
(32) Priority Date :NA
(33) Name of priority country :NA
(86) International Application No :NA
Filing Date :NA
(87) International Publication No : NA
(61) Patent of Addition to Application Number :NA
Filing Date :NA
(62) Divisional to Application Number :NA
Filing Date :NA

(71)**Name of Applicant :**
1)Soma Praveen Kumar
Address of Applicant :1-20-385/4,Venkata Sai Nagar, West Venkatapuram, Tirumalagiri, Rangareddi, Andhra Pradesh India
(72)**Name of Inventor :**
1)Soma Praveen Kumar

(57) Abstract :
A deals sharing system on a network for collective buying and sharing of discounts associated thereof is disclosed. The system is aninformation providing network environment characterized to deliver discounted products which are bought by collective users. Server sends a message of deal information to another user with the details of a deal and it enables a buyer search for a partner to collectively purchase the discounted item. At least some aspects of the techniques may be facilitated by the system and a method to create a group of users based upon a discounted offer. The system creates a group by the name of discount or with the discount provider and it allows number of users to come forcollectivebuying based upon their request.

No. of Pages : 15 No. of Claims : 7

(12) PATENT APPLICATION PUBLICATION
(19) INDIA
(22) Date of filing of Application :11/03/2014
(21) Application No.1256/CHE/2014 A
(43) Publication Date : 21/03/2014

(54) Title of the invention : SYSTEM AND METHOD FOR IMPROVED TRANSACTION BASED VERIFICATION OF DESIGN UNDER TEST (DUT) TO MINIMIZE BOGUS FAILS

(51) International classification :G06Q10/00
(31) Priority Document No :NA
(32) Priority Date :NA
(33) Name of priority country :NA
(86) International Application No :NA
Filing Date :NA
(87) International Publication No : NA
(61) Patent of Addition to Application Number :NA
Filing Date :NA
(62) Divisional to Application Number :NA
Filing Date :NA

(71)**Name of Applicant :**
1)WIPRO LIMITED
Address of Applicant :Doddakannelli, Sarjapur Road, Bangalore 560035, Karnataka, India.
(72)**Name of Inventor :**
1)JENTIL JOSE

(57) Abstract :
Disclosed herein is a method and a system for transaction based verification of a design under test (DUT) by a test bench. The method includes configuring the design under test with at least one configuration, the at least one configuration comprising one or more configuration values, the one or more configuration values changing during a transaction; applying at least one input to the DUT to generate at least one output, the at least one output based on a configuration value; associating a list of changed one or more configuration values with at least one abstract input transaction to generate at least one input transaction, the at least one abstract input transaction being generated by abstracting the at least one input; associating a list of changed one or more configuration values with one or more abstract output transactions to generate at least one output transaction, the one or more abstract output transactions being generated by abstracting the at least one output; determining one or more expected transactions based on the at least one input transaction using one or more transfer functions; generating an outcome as pass/fail based on comparing the at least one output transaction with each of the one or more expected transactions.

No. of Pages : 25 No. of Claims : 14

(12) PATENT APPLICATION PUBLICATION
(19) INDIA
(22) Date of filing of Application :11/03/2014
(21) Application No.1266/CHE/2014 A
(43) Publication Date : 21/03/2014

(54) Title of the invention : METHOD AND SYSTEM FOR NEIGHBOR REPORTING IN A MOBILE COMMUNICATION NETWORK

(51) International classification :H04W24/00
(31) Priority Document No :NA
(32) Priority Date :NA
(33) Name of priority country :NA
(86) International Application No :NA
Filing Date :NA
(87) International Publication No : NA
(61) Patent of Addition to Application Number :NA
Filing Date :NA
(62) Divisional to Application Number :NA
Filing Date :NA

(71)**Name of Applicant :**
1)WIPRO LIMITED
Address of Applicant :Doddakannelli, Sarjapur Road, Bangalore 560035, Karnataka, India.
(72)**Name of Inventor :**
1)SAPTARSHI CHAUDHURI
2)AVIJIT MANNA
3)SHYAM SUNDAR PAL

(57) Abstract :
A method and system for neighbor reporting in a wireless communication network is disclosed. The method comprises categorizing, by a neighbor relation maintenance device, a plurality of Mobile Stations (MSs) into one or more groups; determining, a primary neighbor BS for each group of the one or more groups of MSs; instructing each MS of each group to report signal strength measurements between the each MS and the corresponding primary neighbor BS associated with the each group in a first time period; and instructing each MS of each group to report signal strength measurements between the each MS and each neighbor BS in a predefined neighbor list associated with the each MS in a second time period.

No. of Pages : 26 No. of Claims : 14

(12) PATENT APPLICATION PUBLICATION
(19) INDIA
(22) Date of filing of Application :11/03/2014
(21) Application No.1267/CHE/2014 A
(43) Publication Date : 21/03/2014

(54) Title of the invention : SYSTEM AND METHOD FOR DATA VALIDATION

(51) International classification :G06F11/00
(31) Priority Document No :NA
(32) Priority Date :NA
(33) Name of priority country :NA
(86) International Application No :NA
Filing Date :NA
(87) International Publication No : NA
(61) Patent of Addition to Application Number :NA
Filing Date :NA
(62) Divisional to Application Number :NA
Filing Date :NA

(71)**Name of Applicant :**
1)WIPRO LIMITED
Address of Applicant :Doddakannelli, Sarjapur Road, Bangalore 560035, Karnataka, India.
(72)**Name of Inventor :**
1)DHARMENDRA JHA

(57) Abstract :
Systems and methods for validating data in a communication network environment are described herein. In one example, the method comprises receiving, a data transformation specification from a user and analyzing the data transformation specification to determine data transformation rules, wherein the data transformation rules are indicative of a relationship between corresponding fields of the source repository and the target repository. The method further comprises generating test cases and test scripts based on the data transformation rules and executing the test cases and the test scripts on the source repository and the target repository to validate the relationship between the corresponding fields of the source repository and the target repository. Thereafter, a log file, indicative of the outcome of the execution of the test cases and the test scripts, is generated.

No. of Pages : 29 No. of Claims : 12

(12) PATENT APPLICATION PUBLICATION
(19) INDIA
(22) Date of filing of Application :03/04/2013
(21) Application No.1512/CHE/2013 A
(43) Publication Date : 21/03/2014

(54) Title of the invention : HERBAL STYPTIC TO TREAT BLOOD IN MILK OF POSTPARTUM COWS

(51) International classification :A61K36/00
(31) Priority Document No :NA
(32) Priority Date :NA
(33) Name of priority country :NA
(86) International Application No :NA
Filing Date :NA
(87) International Publication No : NA
(61) Patent of Addition to Application Number :NA
Filing Date :NA
(62) Divisional to Application Number :NA
Filing Date :NA

(71)**Name of Applicant :**
1)U. UMADEVI
Address of Applicant :JAI SREE RAM ILLAM, YELUMALAIYAN NAGAR, MAKKINAMPATTY (PO), POLLACHI (TK), COIMBATORE (DT) 642 001 Tamil Nadu India
(72)**Name of Inventor :**
1)U. UMADEVI
2)DR. T. UMAKANTHAN

(57) Abstract :
The novel inventive subject matter relates to a herbal combination to treat blood in milk of recently calved cows. The ingredients are curry leaves, Lemon and white sugar.

No. of Pages : 5 No. of Claims : 5

(12) PATENT APPLICATION PUBLICATION
(19) INDIA
(22) Date of filing of Application :05/03/2014
(21) Application No.1135/CHE/2014 A
(43) Publication Date : 21/03/2014

(54) Title of the invention : SYSTEMS AND METHODS FOR DESIGNING AN OPTIMIZED INFRASTRUCTURE FOR EXECUTING COMPUTING PROCESSES

(51) International classification :G06F9/00
(31) Priority Document No :NA
(32) Priority Date :NA
(33) Name of priority country :NA
(86) International Application No :NA
Filing Date :NA
(87) International Publication No : NA
(61) Patent of Addition to Application Number :NA
Filing Date :NA
(62) Divisional to Application Number :NA
Filing Date :NA

(71)**Name of Applicant :**
1)WIPRO LIMITED
Address of Applicant :Doddakannelli, Sarjapur Road, Bangalore 560035, Karnataka, India.
(72)**Name of Inventor :**
1)ABHISHEK SUMAN
2)SUMANTA LAHA

(57) Abstract :
This disclosure relates generally to optimizing computing resources and, more particularly, to systems and methods for dynamically determining an optimized infrastructure for processing data. In one embodiment, a method for dynamically determining an optimized infrastructure for processing data is disclosed, comprising: receiving a task-processing request. The method may also include identifying, based on the received task-processing request, one or more rules associated with performing the task-processing request. The method may further include accessing historical learning information associated with performing at least one past task-processing request. The method may further include allocating computing resources for performing the task-processing request based on the identified one or more rules, accessed historical learning information, and available computing resources associated with a distributed computing environment. The method may further include determining the optimized infrastructure based on the allocated computing resources.

No. of Pages : 43 No. of Claims : 21

(12) PATENT APPLICATION PUBLICATION
(19) INDIA
(22) Date of filing of Application :10/03/2014
(21) Application No.1244/CHE/2014 A
(43) Publication Date : 21/03/2014

(54) Title of the invention : AN ADJUSTABLE SHELVING ASSEMBLY AND THE METHOD THEREOF

(51) International classification :A47B
(31) Priority Document No :NA
(32) Priority Date :NA
(33) Name of priority country :NA
(86) International Application No :NA
Filing Date :NA
(87) International Publication No : NA
(61) Patent of Addition to Application Number :NA
Filing Date :NA
(62) Divisional to Application Number :NA
Filing Date :NA

(71)**Name of Applicant :**
1)WIPRO LIMITED
Address of Applicant :Doddakannelli, Sarjapur Road, Bangalore 560035, Karnataka, India.
(72)**Name of Inventor :**
1)JEJJU JACOB
2)PUNEET MAKKAR

(57) Abstract :
An adjustable shelving assembly, comprising: at least two support rails; at least one geared rack provided in each of the at least two support rails; and an actuating mechanism placed adjacent to the at least one geared rack, the actuating mechanism configured to support at least one shelf and facilitates movement of the at least one shelf along the at least two support rails; wherein the actuating mechanism comprising: a pinion mating with the at least one geared rack, a plurality of permanent magnets mounted coaxially inside the pinion, ferromagnetic disks provided on either ends of the pinion, and a shaft placed axially in the pinion, connecting the permanent magnets, such that the permanent magnets magnetizes or demagnetizes the ferromagnetic disks when the shaft is rotated for locking or unlocking the at least one shelf.

No. of Pages : 17 No. of Claims : 10

(12) PATENT APPLICATION PUBLICATION
(19) INDIA
(22) Date of filing of Application :08/04/2013
(21) Application No.1571/CHE/2013 A
(43) Publication Date : 21/03/2014

(54) Title of the invention : ALBIZZIA LEBBECK - A RELIABLE ANTIOXIDANT AND ANTICANCER ACTIVITY SOURCE

(51) International classification	:A61K36/00	(71)**Name of Applicant :**
(31) Priority Document No	:NA	**1)MRS. VASANTHI.P.**
(32) Priority Date	:NA	Address of Applicant :1, 6/43/1, TRIVENI GARDENS, IIIRD AVENUE, GORIMEDU, SALEM 636 008 Tamil Nadu India
(33) Name of priority country	:NA	(72)**Name of Inventor :**
(86) International Application No	:NA	**1)MRS. VASANTHI.P.**
Filing Date	:NA	**2)DR. MANIMEKALAI**
(87) International Publication No	: NA	
(61) Patent of Addition to Application Number	:NA	
Filing Date	:NA	
(62) Divisional to Application Number	:NA	
Filing Date	:NA	

(57) Abstract :
Albizia lebbeck (Benth) is anticancerous.

No. of Pages : 30 No. of Claims : 5

(12) PATENT APPLICATION PUBLICATION
(19) INDIA
(22) Date of filing of Application :11/03/2014
(21) Application No.1263/CHE/2014 A
(43) Publication Date : 21/03/2014

(54) Title of the invention : METHODS FOR IMPROVING CLAIMS PROCESSING FOR A VEHICLE IN AN EVENT AND DEVICES THEREOF

(51) International classification :G06F21/00
(31) Priority Document No :NA
(32) Priority Date :NA
(33) Name of priority country :NA
(86) International Application No :NA
Filing Date :NA
(87) International Publication No : NA
(61) Patent of Addition to Application Number :NA
Filing Date :NA
(62) Divisional to Application Number :NA
Filing Date :NA

(71)**Name of Applicant :**
1)WIPRO LIMITED
Address of Applicant :Doddakannelli, Sarjapur Road, Bangalore 560035, Karnataka, India.
(72)**Name of Inventor :**
1)RAMACHANDRA BUDIHAL
2)RAGUPATHY JAYARAJ
3)RAMPRASAD KANAKATTE RAMANNA
4)MUKESH MANJUNATH PRABHU

(57) Abstract :
A method, device, and non-transitory computer readable medium that improves claims processing for a vehicle in an event includes receiving an application code and one or more images of the vehicle captured by a photographic device in a portable computing device based on received guidance. A claims application for a user is filled based on the application code and the one or more images. The claims application is authenticated and a claim amount is calculated based on the authenticated claims application. A determination is made whether the calculated claim amount is approved for the claims application based on a stored claim limit associated with the user. An indication on the determination of whether the calculated claim amount is approved is provided.

No. of Pages : 26 No. of Claims : 17

(12) PATENT APPLICATION PUBLICATION
(19) INDIA
(22) Date of filing of Application :21/11/2013
(21) Application No.5369/CHE/2013 A
(43) Publication Date : 21/03/2014

(54) Title of the invention : POTENTIATOR-3

(51) International classification :C01D9/00
(31) Priority Document No :NA
(32) Priority Date :NA
(33) Name of priority country :NA
(86) International Application No :NA
Filing Date :NA
(87) International Publication No : NA
(61) Patent of Addition to Application Number :NA
Filing Date :NA
(62) Divisional to Application Number :NA
Filing Date :NA

(71)**Name of Applicant :**
1)U. UMADEVI
Address of Applicant :VETERINARY HOSPITAL, KANJAMPATTY (PO), POLLACHI (TK), COIMBATORE (DT), PIN: 642 003 Tamil Nadu India
2)T. UMAKANTHAN
(72)**Name of Inventor :**
1)U. UMADEVI
2)T. UMAKANTHAN

(57) Abstract :
The inventive subject matter relates to the combination of chemicals which would be used as potentiator and named as POTENTIATOR 3. Potentiator-3 is used for metal alloy production and transmutation among transitional metals and with poor metal.

No. of Pages : 6 No. of Claims : 4

(12) PATENT APPLICATION PUBLICATION
(19) INDIA
(22) Date of filing of Application :11/03/2013
(21) Application No.1022/CHE/2013 A
(43) Publication Date : 21/03/2014

(54) Title of the invention : AN INNOVATIVE TECHNIQUE FOR DOMESTIC WASTE MANAGEMENT IN URBAN LOCALITIES

(51) International classification	:C02F11/00	(71)**Name of Applicant :**
(31) Priority Document No	:NA	**1)V.J. GEORGE**
(32) Priority Date	:NA	Address of Applicant :A-3 DREAMICTY APARTMENTS
(33) Name of priority country	:NA	MINI BYEPASS ROAD PUTHIYARA P.O CALICUT - 673 004
(86) International Application No	:NA	Kerala India
Filing Date	:NA	(72)**Name of Inventor :**
(87) International Publication No	: NA	**1)V.J. GEORGE**
(61) Patent of Addition to Application Number	:NA	
Filing Date	:NA	
(62) Divisional to Application Number	:NA	
Filing Date	:NA	

(57) Abstract :
A method of managing the household waste by treating the waste with mixture of ecofriendly chemicals, drying in solar net drier and further converting to organic manure by mixing the dried treated waste with soil.

No. of Pages : 19 No. of Claims : 5

(12) PATENT APPLICATION PUBLICATION
(19) INDIA
(22) Date of filing of Application :11/03/2014
(21) Application No.1258/CHE/2014 A
(43) Publication Date : 21/03/2014

(54) Title of the invention : A METHOD AND A GUIDED IMAGING UNIT FOR GUIDING A USER TO CAPTURE AN IMAGE

(51) International classification :G06K9/00
(31) Priority Document No :NA
(32) Priority Date :NA
(33) Name of priority country :NA
(86) International Application No :NA
Filing Date :NA
(87) International Publication No : NA
(61) Patent of Addition to Application Number :NA
Filing Date :NA
(62) Divisional to Application Number :NA
Filing Date :NA

(71)**Name of Applicant :**
1)WIPRO LIMITED
Address of Applicant :Doddakannelli, Sarjapur Road, Bangalore 560035, Karnataka, India.
(72)**Name of Inventor :**
1)RAMACHANDRA BUDIHAL

(57) Abstract :
Embodiments of the present disclosure provide a method for guiding a user to capture an image of a target object using an image capturing device. In an embodiment, the method of the present disclosure comprises determining a bounding area for image to be captured and capturing at least one frame of the image upon detecting image to be inside the bounding area. Then, the target object in captured at least one frame is segmented by separating the target object from the rest of the image. Further, at least one of symmetry and self-similarity of the segmented target object is determined. In addition, at least one image parameter is determined by a sensor. The method then provides inputs for guiding user to capture a final image of the target object, based on at least one of determined symmetry, self-similarity, and at least one image parameter.

No. of Pages : 27 No. of Claims : 20

(12) PATENT APPLICATION PUBLICATION
(19) INDIA
(22) Date of filing of Application :03/12/2012
(21) Application No.5029/CHE/2012 A
(43) Publication Date : 21/03/2014

(54) Title of the invention : OINTMENT FOR THE TREATMENT OF SKIN DISEASE ON DOMESTIC ANIMALS

(51) International classification :A61K36/00
(31) Priority Document No :NA
(32) Priority Date :NA
(33) Name of priority country :NA
(86) International Application No :NA
Filing Date :NA
(87) International Publication No : NA
(61) Patent of Addition to Application Number :NA
Filing Date :NA
(62) Divisional to Application Number :NA
Filing Date :NA

(71)**Name of Applicant :**
1)U. UMADEVI
Address of Applicant :PG & RESEARCH DEPARTMENT OF BOTANY, PSGR KRISHNAMMAL COLLEGE FOR WOMEN, COIMBATORE Tamil Nadu India
2)DR. M. KAMALAM
(72)**Name of Inventor :**
1)U. UMADEVI
2)DR. M. KAMALAN

(57) Abstract :
The inventive subject matter relates to an ointment mat would be used in the treatment of skin disease on domestic animals. More especially the invention relates to a composition comprising therapeutically effective amounts of extracts from Andrographis particulate!, (Leaves), Lawsonia inemtis (Leaves) and Madhuca longifolia (seed oil). The novel composition obtained can be used for skin disease treatment on domestic animals.

No. of Pages : 10 No. of Claims : 7

(12) PATENT APPLICATION PUBLICATION
(19) INDIA
(22) Date of filing of Application :19/07/2013
(21) Application No.3226/CHE/2013 A
(43) Publication Date : 21/03/2014

(54) Title of the invention : POTENTIATOR

(51) International classification :A61K33/00
(31) Priority Document No :NA
(32) Priority Date :NA
(33) Name of priority country :NA
(86) International Application No :NA
Filing Date :NA
(87) International Publication No : NA
(61) Patent of Addition to Application Number :NA
Filing Date :NA
(62) Divisional to Application Number :NA
Filing Date :NA

(71)**Name of Applicant :**
1)T. UMAKANTHAN
Address of Applicant :VETERINARY HOSPITAL, KANJAMPATTY (PO), POLLACHI (TK), COIMBATORE (DT) 642 003 Tamil Nadu India
2)U. UMADEVI
(72)**Name of Inventor :**
1)T. UMAKANTHAN
2)U. UMADEVI

(57) Abstract :
The inventive subject matter relates to the combination of chemicals which would be used as potentiator and also named by me as POTENTIATOR. Potentiator increases the normal potency of any chemical when combined. The potentiator can be used to increase the potency of antibiotics, petrochemicals, agrochemicals, kerosene, edible oils, textiles, cement, milk, rubber, vaccines, etc..

No. of Pages : 37 No. of Claims : 5

(12) PATENT APPLICATION PUBLICATION
(19) INDIA
(22) Date of filing of Application :24/02/2014
(21) Application No.1448/CHENP/2014 A
(43) Publication Date : 21/03/2014

(54) Title of the invention : IMAGE PROCESSING FOR HDR IMAGES

(51) International classification :G06T5/00,G06T5/50
(31) Priority Document No :61/681061
(32) Priority Date :08/08/2012
(33) Name of priority country :U.S.A.
(86) International Application No :PCT/US2013/053036
Filing Date :31/07/2013
(87) International Publication No :WO 2014/025588
(61) Patent of Addition to Application Number :NA
Filing Date :NA
(62) Divisional to Application Number :NA
Filing Date :NA

(71)**Name of Applicant :**
1)DOLBY LABORATORIES LICENSING CORPORATION
Address of Applicant :100 Potrero Avenue San Francisco California 94103 4813 U.S.A.
(72)**Name of Inventor :**
1)SHAH Ankur
2)NINAN Ajit
3)JIA Wenhui
4)TONG Huiming
5)YANG Qiaoli
6)TEN Arkady
7)WANG Gaven

(57) Abstract :
Image encoding is described. Log luminances in an HDR input image are histogrammed to generate a tone map along with which a log global tone mapped luminance image is computed. The log global tone mapped luminance image is downscaled. The log luminances and the log global tone mapped luminance image generate a log ratio image. Multi scale resolution filtering the log ratio image generates a log multi scale ratio image. The log multi scale ratio image and the log luminances generate a second log tone mapped image which is normalized to output a tone mapped image based on the downscaled log global tone mapped luminance image and the normalized image. The HDR input image and the output tone mapped image generate a second ratio image which is quantized.

No. of Pages : 58 No. of Claims : 83

(12) PATENT APPLICATION PUBLICATION
(19) INDIA
(22) Date of filing of Application :21/11/2013
(21) Application No.5370/CHE/2013 A
(43) Publication Date : 21/03/2014

(54) Title of the invention : POTENTIATOR-2

(51) International classification :A23L1/00
(31) Priority Document No :NA
(32) Priority Date :NA
(33) Name of priority country :NA
(86) International Application No :NA
Filing Date :NA
(87) International Publication No : NA
(61) Patent of Addition to Application Number :NA
Filing Date :NA
(62) Divisional to Application Number :NA
Filing Date :NA

(71)**Name of Applicant :**
1)U. UMADEVI
Address of Applicant :VETERINARY HOSPITAL, KANJAMPATTY (PO), POLLACHI (TK), COIMBATORE (DT), PIN: 642 003 Tamil Nadu India
2)T. UMAKANTHAN
(72)**Name of Inventor :**
1)U. UMADEVI
2)T. UMAKANTHAN

(57) Abstract :
The inventive subject matter relates to the combination of chemicals which would be used as potentiator and also named by us as POTENTIATOR-2. Potentiator-2 enhances the normally present taste and aroma of the food. The shelf life of any prepared food is increased from 3-6 months. Also reduces the agrochemical residues in variety of agro products. Increases the vitality of cells of any living beings and blood may be stored safely for long time even at room temperature.

No. of Pages : 7 No. of Claims : 5

(12) PATENT APPLICATION PUBLICATION
(19) INDIA
(22) Date of filing of Application :05/03/2014
(21) Application No.1120/CHE/2014 A
(43) Publication Date : 21/03/2014

(54) Title of the invention : SYSTEM AND METHOD FOR REAL TIME ASSESSMENT OF CARGO HANDLING

(51) International classification :G06Q10/00
(31) Priority Document No :NA
(32) Priority Date :NA
(33) Name of priority country :NA
(86) International Application No :NA
Filing Date :NA
(87) International Publication No : NA
(61) Patent of Addition to Application Number :NA
Filing Date :NA
(62) Divisional to Application Number :NA
Filing Date :NA

(71)**Name of Applicant :**
1)WIPRO LIMITED
Address of Applicant :Doddakannelli, Sarjapur Road, Bangalore 560035, Karnataka, India.
(72)**Name of Inventor :**
1)MANJUNATHA NARASIMHA MURTHY
2)SAVITA NARAIN NARANG
3)SUSHRUTHA BANKAPURA
4)PANNEER SELVAM JAYAVEERA PANDIAN

(57) Abstract :
Disclosed herein are a method and a system for real time assessment of cargo handling. The method comprises: receiving a cargo plan for at least one stage of transportation of the cargo; creating at least one first sensor configuration corresponding to the at least one stage of transportation based on the cargo plan; enabling each of at least one first sensor configuration corresponding to the stage of transportation, the at least one first sensor configurations monitoring physical condition of the cargo and the at least one container; receiving dynamic data associated with the cargo and the at least one container; creating at least one context based on analysis of the dynamic data; enabling at least one second sensor configurations based on the at least one context; detecting damage to the cargo and the at least one container based on data received from the at least one second sensor configuration; recommending change in the cargo plan and repackaging of the cargo based on the damage.

No. of Pages : 29 No. of Claims : 26

Publication After 18 Months:

The following Patent Applications have been published under Section 11A (3) of The Patents (Amendment) Act, 2005. Any Person may file representation by way of opposition to the Controller of Patents at the appropriate office against the grant of the patent in the prescribed manner under section 25(1) of the Patents (Amendment) Act, 2005 read with the rule 55 of The Patents (Amendment) Rules, 2006:

(12) PATENT APPLICATION PUBLICATION

(21) Application No.7604/DELNP/2012 A

(19) INDIA

(22) Date of filing of Application :31/08/2012

(43) Publication Date : 21/03/2014

(54) Title of the invention : METHOD FOR PRODUCING SOLUBLE RECOMBINANT INTERFERON PROTEIN WITHOUT DENATURING

(51) International classification	:C07K14/555,C12N15/20,C12N15/63
(31) Priority Document No	:61/310671
(32) Priority Date	:04/03/2010
(33) Name of priority country	:U.S.A.
(86) International Application No	:PCT/US2011/026921
Filing Date	:02/03/2011
(87) International Publication No	:WO 2011/109556
(61) Patent of Addition to Application Number	:NA
Filing Date	:NA
(62) Divisional to Application Number	:NA
Filing Date	:NA

(71)**Name of Applicant :**

1)PFENEX INC.

Address of Applicant :10790 Roselle Street San Diego CA 92121 U.S.A.

(72)**Name of Inventor :**

1)ALLEN Jeffrey

2)FENG Ping Hua

3)PATKAR Anant

4)HANEY Keith L.

5)CHEW Lawrence

6)SENGCHANTHALANGSY Lei Lei Phokham

(57) Abstract :

The present invention relates to the field of recombinant protein production in bacterial hosts. It further relates to extraction of soluble active recombinant protein from an insoluble fraction without the use of denaturation and without the need for a refolding step. In particular the present invention relates to a production process for obtaining high levels a soluble recombinant Type 1 interferon protein from a bacterial host.

No. of Pages : 63 No. of Claims : 35

(12) PATENT APPLICATION PUBLICATION
(19) INDIA
(22) Date of filing of Application :31/08/2012
(21) Application No.7605/DELNP/2012 A
(43) Publication Date : 21/03/2014

(54) Title of the invention : ELECTRICAL DEVICES CONTAINING CARBON NANOTUBE INFUSED FIBERES AND METHODS FOR PRODUCTION THEREOF

(51) International classification :H01G4/008
(31) Priority Document No :61/309827
(32) Priority Date :02/03/2010
(33) Name of priority country :U.S.A.
(86) International Application No :PCT/US2011/026824
Filing Date :02/03/2011
(87) International Publication No :WO 2011/109485
(61) Patent of Addition to Application Number :NA
Filing Date :NA
(62) Divisional to Application Number :NA
Filing Date :NA

(71)**Name of Applicant :**
1)APPLIED NANOSTRUCTURED SOLUTIONSLLC
Address of Applicant :2323 Eastern Blvd. Baltimore MD 21220 U.S.A.
(72)**Name of Inventor :**
1)FLEISCHER Corey Adam
2)HETZEL Lawrence P.
3)SHAH Tushar K.

(57) Abstract :
Electrical devices containing continuous fibers that are infused with carbon nanotubes are described herein. The electrical devices contain at least a first electrode layer and a second electrode layer where the first and second electrode layers each contain a plurality of continuous fibers that are infused with carbon nanotubes. In some embodiments the electrical devices can be supercapacitors further containing at least a base plate a layer of separator material disposed between the first and second electrode layers and an electrolyte in contact with the first and second electrode layers. The first and second electrode layers can be formed by conformal winding of the continuous fibers. The electrical devices can contain any number of additional electrode layers each being separated from one another by a layer of separator material. Methods for producing the electrical devices are also described herein.

No. of Pages : 53 No. of Claims : 44

(12) PATENT APPLICATION PUBLICATION
(19) INDIA
(22) Date of filing of Application :31/08/2012
(21) Application No.7606/DELNP/2012 A
(43) Publication Date : 21/03/2014

(54) Title of the invention : SPIRAL WOUND ELECTRICAL DEVICES CONTAINING CARBON NANOTUBE INFUSED ELECTRODE MATERIALS AND METHODS AND APPARATUSES FOR PRODUCTION THEREOF

(51) International classification :H01M4/60,B23K35/00
(31) Priority Document No :61/309828
(32) Priority Date :02/03/2010
(33) Name of priority country :U.S.A.
(86) International Application No :PCT/US2011/026819
Filing Date :02/03/2011
(87) International Publication No :WO 2011/109480
(61) Patent of Addition to Application Number :NA
Filing Date :NA
(62) Divisional to Application Number :NA
Filing Date :NA

(71)**Name of Applicant :**
1)APPLIED NANOSTRUCTURED SOLUTIONS LLC
Address of Applicant :2323 Eastern Blvd. Baltimore MD 21220 U.S.A.
(72)**Name of Inventor :**
1)FLEISCHER Corey Adam
2)SHAH Tushar K.
3)HETZEL Lawrence P.
4)MALECKI Harry C.

(57) Abstract :
Electrical devices having electrodes containing carbon nanotubes infused to a substrate are described herein. The electrical devices contain at least a first electrode material containing a first plurality of carbon nanotubes infused to a first substrate and a second electrode material containing a second plurality of carbon nanotubes infused to a second substrate. The first electrode material and the second electrode material are wound in a spiral configuration about a central axis. The electrical devices can be supercapacitors which also contain at least an electrolyte in contact with the first electrode material and the second electrode material and a first separator material disposed between the first electrode material and the second electrode material. Methods and apparatuses for making the electrical devices are also disclosed herein.

No. of Pages : 69 No. of Claims : 49

(12) PATENT APPLICATION PUBLICATION
(19) INDIA
(22) Date of filing of Application :31/08/2012
(21) Application No.7607/DELNP/2012 A
(43) Publication Date : 21/03/2014

(54) Title of the invention : PLUG TYPE CONNECTOR

(51) International classification :H01R4/48,H01R13/11,H01R13/40
(31) Priority Document No :10 2010 011 371.9
(32) Priority Date :12/03/2010
(33) Name of priority country :Germany
(86) International Application No :PCT/EP2011/053753
Filing Date :11/03/2011
(87) International Publication No :WO 2011/110688
(61) Patent of Addition to Application Number :NA
Filing Date :NA
(62) Divisional to Application Number :NA
Filing Date :NA

(71)**Name of Applicant :**
1)PHOENIX CONTACT GMBH & CO. KG
Address of Applicant :Flachsmarktstrae 8 32825 Blomberg Germany
(72)**Name of Inventor :**
1)NEHM Detlef
2)FHRER Thomas
3)SCHULTE Hans Hilmar

(57) Abstract :
The subject matter of the invention is a plug type connector comprising a contact carrier element (10) wherein a contact element (16) for receiving a litz wire (12) of a cable is arranged in the contact carrier element (10) wherein the contact element (16) is fixed in the contact carrier element (10) wherein in the event of a force being exerted on the contact element (16) which is greater than the holding force of the fixing the fixing can be released and the contact element (16) is mounted movably in the contact carrier element (10).

No. of Pages : 14 No. of Claims : 5

(12) PATENT APPLICATION PUBLICATION
(19) INDIA
(22) Date of filing of Application :31/08/2012
(21) Application No.7608/DELNP/2012 A
(43) Publication Date : 21/03/2014

(54) Title of the invention : TREATMENT OF CHICORY

(51) International classification :A23F5/44,A23L1/015,A23B7/01
(31) Priority Document No :NA
(32) Priority Date :NA
(33) Name of priority country :NA
(86) International Application No :PCT/EP2010/052926
Filing Date :08/03/2010
(87) International Publication No :WO 2011/110215
(61) Patent of Addition to Application Number :NA
Filing Date :NA
(62) Divisional to Application Number :NA
Filing Date :NA

(71)**Name of Applicant :**
1)NESTEC S.A.
Address of Applicant :Avenue Nestl 55 CH 1800 Vevey Switzerland
(72)**Name of Inventor :**
1)LABRUNIE Thierry
2)KILCHHERR Sylvain
3)DUFFEY Jean Louis
4)MATHYS Alexander
5)PALZER Stephan
6)THEURILLAT MORITZ Viviane Andre Claude

(57) Abstract :
The invention relates to a method of treatment of chicory pieces which comprises a step of soaking non roasted chicory pieces with an aqueous solution comprising divalent cations followed by a step of steaming said chicory pieces.

No. of Pages : 20 No. of Claims : 11

(12) PATENT APPLICATION PUBLICATION
(19) INDIA
(22) Date of filing of Application :05/09/2012
(21) Application No.2739/DEL/2012 A
(43) Publication Date : 21/03/2014

(54) Title of the invention : DEVICE FOR SUPPLYING RINSING MEDIUM IN HAMMER DRILL

(51) International classification :B25D
(31) Priority Document No :1294/2011
(32) Priority Date :08/09/2011
(33) Name of priority country :Austria
(86) International Application No :NA
Filing Date :NA
(87) International Publication No : NA
(61) Patent of Addition to Application Number :NA
Filing Date :NA
(62) Divisional to Application Number :NA
Filing Date :NA

(71)**Name of Applicant :**
1)TMT-BBG RESEARCH AND DEVELOPMENT GMBH
Address of Applicant :WERK VI-STRASSE 55, A-8605 KAPFENBERG, AUSTRIA
(72)**Name of Inventor :**
1)ROMAIN CLESEN
2)MICHAEL WOLFSBERGER

(57) Abstract :
The invention relates to a device for feeding a rinsing medium to the tool of a hammer drill, composed essentially of a rotatable and/or axially displaceable drilling tool holding means with at least one supply channel for the rinsing medium, a transfer part (2) interacting with the holding means (1), a housing (3) and a feed means (4) as well as a holding part with a rinsing medium inlet. In order to extend the service life of the sealing system, it is provided according to the invention that a feed means (4) shaped essentially in an axially symmetrical manner and the associated holding part (5) form a preferably permanently connected component, wherein the feed means (4) has on both sides respectively distally friction bearings (41,41), in particular guide belts and seals (42, 42) towards the drilling tool holding means (1) and the holding part (5) is radially displaceable in limits with bending with respect to the housing (3) and/or a fixing ring (31) connected thereto, but is positively fixed tangentially.

No. of Pages : 9 No. of Claims : 2

(12) PATENT APPLICATION PUBLICATION
(19) INDIA
(22) Date of filing of Application :04/09/2012
(21) Application No.7711/DELNP/2012 A
(43) Publication Date : 21/03/2014

(54) Title of the invention : SHAVING RAZORS AND CARTRIDGES

(51) International classification :B26B21/40,B26B21/22
(31) Priority Document No :12/724737
(32) Priority Date :16/03/2010
(33) Name of priority country :U.S.A.
(86) International Application No :PCT/US2011/027564
Filing Date :08/03/2011
(87) International Publication No :WO 2011/115782
(61) Patent of Addition to Application Number :NA
Filing Date :NA
(62) Divisional to Application Number :NA
Filing Date :NA

(71)**Name of Applicant :**
1)THE GILLETTE COMPANY
Address of Applicant :World Shaving Headquarters IP/Legal Patent Department 3E One Gillette Park Boston Massachusetts 02127 U.S.A.
(72)**Name of Inventor :**
1)BRUNO Michael Hal

(57) Abstract :
A shaving system (10) has a cap (12) a skin engaging member (14) at least one blade (16) between the skin engaging member and the cap and a guard bar (18) between the skin engaging member and the blade. The guard bar has a first set of spaced apart projections (34) offset from a second set of spaced apart projections (36) in a first direction parallel to the blade and in a second direction transverse to the blade. The first set of projections and the second set of projections define a plurality of open channels (50) extending transverse to the blade. The open channels have a width of about 0.20mm to about 0.50mm.

No. of Pages : 20 No. of Claims : 15

(12) PATENT APPLICATION PUBLICATION
(19) INDIA
(22) Date of filing of Application :04/09/2012
(21) Application No.7713/DELNP/2012 A
(43) Publication Date : 21/03/2014

(54) Title of the invention : PROCESS FOR THE PREPARATION OF BORTEZOMIB

(51) International classification :C07F5/02
(31) Priority Document No :273/DEL/2010
(32) Priority Date :09/02/2010
(33) Name of priority country :India
(86) International Application No :PCT/IB2011/050555
Filing Date :09/02/2011
(87) International Publication No :WO 2011/098963
(61) Patent of Addition to Application Number :NA
Filing Date :NA
(62) Divisional to Application Number :NA
Filing Date :NA

(71)**Name of Applicant :**
1)RANBAXY LABORATORIES LIMITED
Address of Applicant :Head Office: 12th Floor Devika Tower 06 Nehru Place New Delhi Delhi 110019 India
(72)**Name of Inventor :**
1)KUMAR Satish
2)DURVASULA Venugopal Venkatarama
3)RATHOD Parendu Dhirajlal
4)ARYAN Ram Chander

(57) Abstract :
The present invention relates to a process for the preparation of bortezomib (Formula I) and its intermediates.

No. of Pages : 36 No. of Claims : 19

(12) PATENT APPLICATION PUBLICATION
(19) INDIA
(22) Date of filing of Application :07/09/2012
(21) Application No.7815/DELNP/2012 A
(43) Publication Date : 21/03/2014

(54) Title of the invention : ELECTRIC HEATING COOKER WITH WEIGHING FUNCTION AND WEIGHING CONTROL METHOD THEREOF

(51) International classification	:A47J27/00,A47J36/00,G01G19/52
(31) Priority Document No	:201010112847.0
(32) Priority Date	:22/02/2010
(33) Name of priority country	:China
(86) International Application No	:PCT/CN2011/071132
Filing Date	:21/02/2011
(87) International Publication No	:WO 2011/100896
(61) Patent of Addition to Application Number	:NA
Filing Date	:NA
(62) Divisional to Application Number	:NA
Filing Date	:NA

(71)**Name of Applicant :**
1)XIE Guohua
Address of Applicant :Room 1404 Unit 1 Building No. 3 Bo Ya De Yuan Xi Er Qi HaiDian Beijing 100085 China
(72)**Name of Inventor :**
1)XIE Guohua

(57) Abstract :
An electric heating cooker with weighing function and a weighing control method thereof are provided. An electronic scale (5) with weighing function is added to the bottom of a traditional electric heating cooker and a cooking process experience database and a food information database are stored in the electronic scale (5). The weighing control method enables the user to accurately determine the amount of water which should be added into the food with a certain weight and designs heating power experience curve at different weight points for the food such as rice and meat. The method can make adjustment intelligently according to the taste feedback from the user so that the next cooking can be more suitable for the user s taste requirement and by using the method mentioned above the cooker can display the total or average intake of calorie value cholesterol content protein content fat content edible salt amount and edible oil amount of various food in current cooking and whether there is mutually restricting food or not.

No. of Pages : 34 No. of Claims : 11

(12) PATENT APPLICATION PUBLICATION
(19) INDIA
(22) Date of filing of Application :07/09/2012
(21) Application No.7816/DELNP/2012 A
(43) Publication Date : 21/03/2014

(54) Title of the invention : SINGLE SPEED TRANSMISSION FOR PLUGIN HYBRID ELECTRIC VEHICLE WITH TWO DISCONNECTS

(51) International classification :B60K20/02,F16H55/30,B60K6/50
(31) Priority Document No :61/309022
(32) Priority Date :01/03/2010
(33) Name of priority country :U.S.A.
(86) International Application No :PCT/US2011/025825
Filing Date :23/02/2011
(87) International Publication No :WO 2011/109196
(61) Patent of Addition to Application Number :NA
Filing Date :NA
(62) Divisional to Application Number :NA
Filing Date :NA

(71)**Name of Applicant :**
1)BORGWARNER INC.
Address of Applicant :Patent Department 3850 Hamlin Road Auburn Hills Michigan 48326 U.S.A.
(72)**Name of Inventor :**
1)KELLER Robert F.

(57) Abstract :
A power transfer system (10) for a vehicle to be driven by a prime mover through a first input drive shaft (12) and an electric motor through a second input drive shaft (14) carried by the vehicle. A power transfer system (10) supports the first and second input drive shafts (12 14) to be mechanically interconnected to an output drive shaft (16) for driving driven wheels of the vehicle. A clutch (18) engages (18a) and disengages (18b) the first input drive shaft (12) with respect to the output drive shaft (16). A first output drive sprocket (24) is connected to the output drive shaft (16) a second output drive sprocket (22) is connected to the second input drive shaft (14) and an endless loop sprocket engaging drive member (26) extends between the first and second sprockets (24 22). A disconnect mechanism (20) engages (20b) and disengages (20a) the second input drive shaft (14) with respect to the output drive shaft (16). The disconnect mechanism (20) is located between one of the sprockets (24 22) and its corresponding drive shaft (16 14).

No. of Pages : 18 No. of Claims : 15

(12) PATENT APPLICATION PUBLICATION
(19) INDIA
(22) Date of filing of Application :03/09/2012
(21) Application No.2722/DEL/2012 A
(43) Publication Date : 21/03/2014

(54) Title of the invention : CENTRAL UNIT, INFORMATION PROCESSING SYSTEM, INFORMATION PROCESSING METHOD AND PROGRAM

(51) International classification	:G06F
(31) Priority Document No	:2011-205303
(32) Priority Date	:20/09/2011
(33) Name of priority country	:Japan
(86) International Application No	:NA
Filing Date	:NA
(87) International Publication No	: NA
(61) Patent of Addition to Application Number	:NA
Filing Date	:NA
(62) Divisional to Application Number	:NA
Filing Date	:NA

(71)**Name of Applicant :**
1)MURATA MACHINERY, LTD.
Address of Applicant :3, MINAMI OCHIAI-CHO, KISSHOIN, MINAMI-KU, KYOTO-SHI, KYOTO 601-8326 JAPAN
(72)**Name of Inventor :**
1)TAIJI NAKANO
2)KUNIO KINOSHITA

(57) Abstract :
An object of the present invention is to provide a central device or the like that can store a plurality of pieces of operation information of textile machines provided in a plurality of plants, and also can generate report information including the plurality of pieces of operation information of textile machines and abnormality information of each plant.- A server computer 1 (central device) of the present invention receives from a client computer 2 plant identification information, machine identification information, unit identification information and a plurality of pieces of operation information on operating states of a textile machine 3 and units 4. The server computer 1 stores the received a plurality of pieces of operation information in a storing section in association with the plant identification information, the machine identification information, and the unit identification information. When the operation information stored in the storing section exceeds a threshold, the server computer 1 determines that the information is abnormal. The server computer 1 also generates report information per plant identification information, including the operation information of each textile machine 3 and each unit 4 of the textile machine 3, and abnormality information to identify the determined abnormal operation information.

No. of Pages : 110 No. of Claims : 20

(12) PATENT APPLICATION PUBLICATION
(19) INDIA
(22) Date of filing of Application :06/09/2012
(21) Application No.7772/DELNP/2012 A
(43) Publication Date : 21/03/2014

(54) Title of the invention : NORBORNANE-2-SPIRO-A-CYCLOALKANONE-A'-SPIRO-2-NORBORNANE-5,5,6,6-TETRACARBOXYLIC DIANHYDRIDE, NORBORNANE-2-SPIRO-A-CYCLOALKANONE-A'-SPIRO-2-NORBORNANE-5,5,6,6-TETRACARBOXYLIC ACID AND ESTER THEREOF, METHOD FOR PRODUCING NORBORNANE-2-SPIRO-A-CYCLOALKANONE- A'-SPIRO-2-NORBORNANE-5,5,6,6-TETRACARBOXYLIC DIANHYDRIDE, POLYIMIDE OBTAINED USING SAME AND METHOD FOR PRODUCING POLYIMIDE

(51) International classification :C07D493/10,C07C69/757,C08G73/10
(31) Priority Document No :2010026952
(32) Priority Date :09/02/2010
(33) Name of priority country :Japan
(86) International Application No :PCT/JP2011/052739
Filing Date :09/02/2011
(87) International Publication No :WO 2011/099518
(61) Patent of Addition to Application Number :NA
Filing Date :NA
(62) Divisional to Application Number :NA
Filing Date :NA

(71)**Name of Applicant :**
1)JX Nippon Oil & Energy Corporation
Address of Applicant :6-3 Otemachi 2-chome Chiyoda-ku Tokyo 1008162 JAPAN
(72)**Name of Inventor :**
1)MATSUMOTO Toshihiko
2)KOMATSU Shinichi

(57) Abstract :
Disclosed is a norbornane 2 spiro a cycloalkanone a spiro 2 norbornane 5 5 6 6 tetracarboxylic dianhydride represented by general formula (1) wherein n represents an integer of 0 to 12 and R R and R each independently represent a hydrogen atom or the like.

No. of Pages : 147 No. of Claims : 9

(12) PATENT APPLICATION PUBLICATION
(19) INDIA
(22) Date of filing of Application :10/09/2012
(21) Application No.7885/DELNP/2012 A
(43) Publication Date : 21/03/2014

(54) Title of the invention : ALKYLATED AROMATICS PRODUCTION

(51) International classification :C07C2/66,C07C15/00,C07C7/00
(31) Priority Document No :NA
(32) Priority Date :NA
(33) Name of priority country :NA
(86) International Application No :PCT/US2010/026844
Filing Date :10/03/2010
(87) International Publication No :WO 2011/112189
(61) Patent of Addition to Application Number :NA
Filing Date :NA
(62) Divisional to Application Number :NA
Filing Date :NA

(71)**Name of Applicant :**
1)EXXONMOBIL CHEMICAL PATENTS INC.
Address of Applicant :A Corporation of The State of Delaware 5200 Bayway Drive Baytown TX 77522 2149 U.S.A.
2)STONE & WEBSTER INC.
(72)**Name of Inventor :**
1)VINCENT Matthew J.
2)NANDA Vijay
3)BHANDARKAR Maruti
4)MAERZ Brian
5)HELTON Terry E.

(57) Abstract :
Disclosed is a process for the production of alkylated aromatics by contacting a feed stream comprising an alkylatable aromatic an alkylating agent and trace amounts of water and impurities in the presence of first and second alkylation catalysts wherein the water and impurities are removed in order to improve the cycle length of such alkylation catalysts. Water and a portion of impurities are removed in a dehydration zone. A first alkylation zone having a first alkylation catalyst which in some embodiments is a large pore molecular sieve acts to remove a larger portion of impurities such as nitrogenous and other species and to alkylate a smaller portion of the alkylatable aromatic compound. A second alkylation zone which in some embodiments is a medium pore molecular sieve acts to remove a smaller portion of impurities and to alkylate a larger portion of the alkylatable aromatic compound.

No. of Pages : 42 No. of Claims : 24

(12) PATENT APPLICATION PUBLICATION
(19) INDIA
(22) Date of filing of Application :10/09/2012
(21) Application No.7886/DELNP/2012 A
(43) Publication Date : 21/03/2014

(54) Title of the invention : SENSOR UNIT FOR A DISK BRAKE

(51) International classification :F16D66/02
(31) Priority Document No :20 2010 003 737.9
(32) Priority Date :17/03/2010
(33) Name of priority country :Germany
(86) International Application No :PCT/EP2011/001208
Filing Date :11/03/2011
(87) International Publication No :WO 2011/113553
(61) Patent of Addition to Application Number :NA
Filing Date :NA
(62) Divisional to Application Number :NA
Filing Date :NA

(71)**Name of Applicant :**
1)HALDEX BRAKE PRODUCTS AB
Address of Applicant :Box 501 S 261 24 Landskrona Sweden
(72)**Name of Inventor :**
1)WELIN Hans

(57) Abstract :
The invention relates to a sensor device (91) for determining the pad wear in a disk brake comprising a brake caliper (1) and a brake actuating mechanism (2) which lies in the brake caliper (1) and which has a pressure piece (4) that directly or indirectly interacts with a brake pad (6) such that the movement of the brake pad (6) corresponds to the movement of the pressure piece (4). The sensor device (91) can be inserted backwards as a unit into the housing of the brake caliper (1).

No. of Pages : 16 No. of Claims : 6

(12) PATENT APPLICATION PUBLICATION
(19) INDIA
(22) Date of filing of Application :10/09/2012
(21) Application No.7900/DELNP/2012 A
(43) Publication Date : 21/03/2014

(54) Title of the invention : TIMING OF UPLINK TRANSMISSIONS IN A MULTI CARRIER COMMUNICATION SYSTEM

(51) International classification :H04W56/00
(31) Priority Document No :61/319318
(32) Priority Date :31/03/2010
(33) Name of priority country :U.S.A.
(86) International Application No :PCT/EP2011/054708
Filing Date :28/03/2011
(87) International Publication No :WO 2011/120910
(61) Patent of Addition to Application Number :NA
Filing Date :NA
(62) Divisional to Application Number :NA
Filing Date :NA

(71)**Name of Applicant :**
1)TELEFONAKTIEBOLAGET L M ERICSSON (PUBL)
Address of Applicant :SE 164 83 Stockholm Sweden
(72)**Name of Inventor :**
1)LINDOFF Bengt
2)WALL‰N Anders
3)ANDGART Niklas
4)KAMUF Matthias
5)BERGLJUNG Christian

(57) Abstract :
A terminal with transmitter and receiver operates in a multi carrier communication system and receives at least two downlink carriers. One or more timing advance commands are received each associated with a group of one or more uplink carriers each group being associated with one or more of the received downlink carriers. For each downlink carrier associated with one of the groups of uplink carriers one is selected as a reference downlink carrier; the reference downlink carrier timing is ascertained; and a transmission time period is ascertained based on the timing of the downlink reference carrier and an offset specified by the timing advance command associated with the group of uplink carriers. The transmission time period comprises a start time and a stop time. Transmission is initiated at an earliest transmission start time of the ascertained transmission time periods and is ceased at a latest ascertained stop time.

No. of Pages : 32 No. of Claims : 24

(12) PATENT APPLICATION PUBLICATION
(19) INDIA
(22) Date of filing of Application :10/09/2012
(21) Application No.7901/DELNP/2012 A
(43) Publication Date : 21/03/2014

(54) Title of the invention : CIRCUIT AND METHOD FOR INTERFERENCE REDUCTION

(51) International classification :H04B1/04,H03F1/32
(31) Priority Document No :NA
(32) Priority Date :NA
(33) Name of priority country :NA
(86) International Application No :PCT/SE2010/050319
Filing Date :23/03/2010
(87) International Publication No :WO 2011/119078
(61) Patent of Addition to Application Number :NA
Filing Date :NA
(62) Divisional to Application Number :NA
Filing Date :NA

(71)**Name of Applicant :**
1)TELEFONAKTIEBOLAGET L M ERICSSON (PUBL)
Address of Applicant :S 164 83 Stockholm Sweden
(72)**Name of Inventor :**
1)DALIPI Spendim

(57) Abstract :
A radio frequency transmitter comprises an amplifier an antenna port an isolator adapted to isolate an output of the amplifier from an interfering signal of the antenna port a linearization loop and a transmission line comprising a first part (coupling a signal source to an input of the amplifier) a second part (coupling the output of the amplifier to an input of the isolator) and a third part (coupling an output of the isolator to the antenna port). The linearization loop is adapted to reduce non linearity of the isolator and comprises a first directional coupler coupled to the third part of the transmission line a loop impedance and at least one further linearization loop element adapted to adjust a linearization signal and to feed the adjusted linearization signal to the transmission line. The radio frequency transmitter also comprises an interference reducing circuit adapted to reduce an influence of the interfering signal on the linearization loop. The circuit comprises a variable gain and phase shifter and second and third directional couplers. The variable gain and phase shifter is coupled to the third part of the transmission line via the second directional coupler which extracts a compensation signal from the transmission line and is adapted to adjust amplitude and phase of the compensation signal based on the amplitude and phase of the interfering signal passing through the loop impedance. The third directional coupler couples the variable gain and phase shifter to the loop feed line and feeds the adjusted compensation signal thereto.

No. of Pages : 27 No. of Claims : 15

(12) PATENT APPLICATION PUBLICATION
(19) INDIA
(22) Date of filing of Application :10/09/2012
(21) Application No.7902/DELNP/2012 A
(43) Publication Date : 21/03/2014

(54) Title of the invention : FAN AND FILTER UNIT

(51) International classification :H05K7/20,B01D46/00
(31) Priority Document No :102010016519.0
(32) Priority Date :19/04/2010
(33) Name of priority country :Germany
(86) International Application No :PCT/EP2011/053837
Filing Date :15/03/2011
(87) International Publication No :WO 2011/131421
(61) Patent of Addition to Application Number :NA
Filing Date :NA
(62) Divisional to Application Number :NA
Filing Date :NA

(71)**Name of Applicant :**
1)RITTAL GMBH & CO. KG
Address of Applicant :Auf dem St¼tzelberg 35745 Herborn Germany
(72)**Name of Inventor :**
1)HARTMANN Reiner
2)LEHNERT Bernd
3)SCHNEIDER Stefan

(57) Abstract :
The invention relates to a fan and filter unit to be mounted in the wall of a switch cabinet or housing comprising a fan unit (50) inserted in a fan housing (10) a filter mat arrangement (20) mounted upstream of the fan unit and a fan cover (30) immobilizing the filter mat. According to an advantageous embodiment of the fan and filter unit the fan and filter unit has a filter mat monitoring unit (40) which is designed to detect the service life and/or a degree of soiling of the filter mat arrangement (20) and which comprises an insert (41) integrated into the fan housing or the fan cover (30) and having an illuminated display (45) visible from the exterior of the fan cover (30) facing away from the fan unit (50). Said display is designed to display information at least when a service life that is predetermined or can be predetermined and/or a degree of soiling that is predetermined or can be predetermined is exceeded.

No. of Pages : 14 No. of Claims : 7

(12) PATENT APPLICATION PUBLICATION
(19) INDIA
(22) Date of filing of Application :05/09/2012
(21) Application No.2757/DEL/2012 A
(43) Publication Date : 21/03/2014

(54) Title of the invention : ELECTROMAGENTIC DEVICE

(51) International classification :G10F
(31) Priority Document No :13/292,832
(32) Priority Date :09/11/2011
(33) Name of priority country :U.S.A.
(86) International Application No :NA
Filing Date :NA
(87) International Publication No : NA
(61) Patent of Addition to Application Number :NA
Filing Date :NA
(62) Divisional to Application Number :NA
Filing Date :NA

(71)**Name of Applicant :**
1)HAMILTON SUNDSTRAND CORPORATION
Address of Applicant :ONE HAMILTON ROAD, WINDSOR LOCKS, CT 06096 U.S.A.
(72)**Name of Inventor :**
1)WILKINSON SCOTT P.
2)HERNDEN MICHAEL R.

(57) Abstract :
An electromagnetic device is provided and includes a stator defining a bore, a rotor rotatable within the stator bore and having permanent magnetic elements disposed about an outer surface thereof to define a series of magnetic poles, power coils configured to generate a power current as a first portion of the magnetic poles pass each of the power coils due to rotor rotation and sense coils configured to generate a sense current as a second portion of the magnetic poles pass each of the sense coils due to the rotor rotation.

No. of Pages : 19 No. of Claims : 22

(12) PATENT APPLICATION PUBLICATION
(19) INDIA
(22) Date of filing of Application :05/09/2012
(21) Application No.2758/DEL/2012 A
(43) Publication Date : 21/03/2014

(54) Title of the invention : METHODS AND APPARATUS TO DETECT UNINSTALLATION OF AN ON-DEVICE METER

(51) International classification :G06F
(31) Priority Document No :61/531,487
(32) Priority Date :06/09/2011
(33) Name of priority country :U.S.A.
(86) International Application No :NA
Filing Date :NA
(87) International Publication No : NA
(61) Patent of Addition to Application Number :NA
Filing Date :NA
(62) Divisional to Application Number :NA
Filing Date :NA

(71)**Name of Applicant :**
1)THE NIELSEN COMPANY (US), LLC
Address of Applicant :150 NORTH MARTINGALE ROAD, SCHAUMBURG, ILLINOIS 60173, U.S.A.
(72)**Name of Inventor :**
1)CARY PILLERS

(57) Abstract :
Example methods and apparatus to detect uninstallation of an on-device meter are disclosed. An example method includes receiving, at a second application on the mobile device, a notification that a first application is to be uninstalled. An uninstallation notification is transmitted, with a transmitter on the mobile device, to a remote data collector, the uninstallation notification including an identifier to identify at least one of the mobile device associated with the uninstallation or a user of the mobile device.

No. of Pages : 46 No. of Claims : 32

(12) PATENT APPLICATION PUBLICATION
(19) INDIA
(22) Date of filing of Application :05/09/2012
(21) Application No.2759/DEL/2012 A
(43) Publication Date : 21/03/2014

(54) Title of the invention : DIAGONAL MOUNTING BRACKET FOR A PHOTOVOLTAIC MODULE

(51) International classification :H01L
(31) Priority Document No :61/532,450
(32) Priority Date :08/09/2011
(33) Name of priority country :U.S.A.
(86) International Application No :NA
Filing Date :NA
(87) International Publication No : NA
(61) Patent of Addition to Application Number :NA
Filing Date :NA
(62) Divisional to Application Number :NA
Filing Date :NA

(71)**Name of Applicant :**
1)FIRST SOLAR, INC.
Address of Applicant :28101 CEDAR PARK BOULEVARD, PERRYSBURG, OHIO 43551, U.S.A.
(72)**Name of Inventor :**
1)MARKUS EBERHARD BECK
2)RAFFI GARABEDIAN
3)PEDRO GONZALEZ

(57) Abstract :
A photovoltaic module has a diagonal mounting bracket for structural attachment of the module to a support structure. The photovoltaic module has a back cover with an outer surface and a diagonal mounting bracket is attached to the back cover and extends along at least a portion of a diagonal of the back cover. A method of forming a photovoltaic module with a diagonal mounting bracket is also described.

No. of Pages : 21 No. of Claims : 37

(12) PATENT APPLICATION PUBLICATION
(19) INDIA
(22) Date of filing of Application :10/09/2012
(21) Application No.7895/DELNP/2012 A
(43) Publication Date : 21/03/2014

(54) Title of the invention : BENZISOXAZOLES AND AZABENZISOXAZOLES AS MGLUR4 ALLOSTERIC POTENTIATORS COMPOSITIONS AND METHODS OF TREATING NEUROLOGICAL DYSFUNCTION

(51) International classification :A01N43/76,A61K31/42
(31) Priority Document No :61/303481
(32) Priority Date :11/02/2010
(33) Name of priority country :U.S.A.
(86) International Application No :PCT/US2011/024627
Filing Date :11/02/2011
(87) International Publication No :WO 2011/100614
(61) Patent of Addition to Application Number :NA
Filing Date :NA
(62) Divisional to Application Number :NA
Filing Date :NA

(71)**Name of Applicant :**
1)VANDERBILT UNIVERSITY
Address of Applicant :305 Kirkland Hall Nashville Tennessee 37240 U.S.A.
(72)**Name of Inventor :**
1)CONN P. Jeffrey
2)LINDSLEY Craig W.
3)HOPKINS Corey R.
4)WEAVER Charles David
5)NISWENDER Colleen M.
6)ENGERS Darren W.

(57) Abstract :
Benzisoxazole and azabenzisoxazole compounds which are useful as allosteric potentiators/positive allosteric modulators of the metabotropic glutamate receptor subtype 4 (mGluR4); synthetic methods for making the compounds; pharmaceutical compositions comprising the compounds; and methods of using the compounds for example in treating neurological and psychiatric disorders or other disease state associated with glutamate dysfunction.

No. of Pages : 112 No. of Claims : 91

(12) PATENT APPLICATION PUBLICATION
(19) INDIA
(22) Date of filing of Application :10/09/2012
(21) Application No.7896/DELNP/2012 A
(43) Publication Date : 21/03/2014

(54) Title of the invention : BRAKING DEVICE AND VEHICLE

(51) International classification :B60T11/20,B60T8/18
(31) Priority Document No :2010056625
(32) Priority Date :12/03/2010
(33) Name of priority country :Japan
(86) International Application No :PCT/JP2011/055840
Filing Date :11/03/2011
(87) International Publication No :WO 2011/111840
(61) Patent of Addition to Application Number :NA
Filing Date :NA
(62) Divisional to Application Number :NA
Filing Date :NA

(71)**Name of Applicant :**
1)TOYOTA JIDOSHA KABUSHIKI KAISHA
Address of Applicant :1 Toyota cho Toyota shi Aichi 4718571 Japan
(72)**Name of Inventor :**
1)OSAKABE Taro
2)KANEKO Takayuki

(57) Abstract :
A vehicle (10) comprises a vehicle body (11) and a braking device (20) for causing braking force to act on the vehicle body (11) and the braking device (20) makes the braking force on the side close to the center of gravity larger than the braking force on the side far from the center of gravity in the direction orthogonal to the direction in which the vehicle body is headed in the state in which the driver is riding in a vehicle as initial setting by the mechanical structure such as the difference in hydraulic pressure to be supplied or the difference in brake performance or the electrical setting such as the difference in expression for calculation. Consequently the deflection of the vehicle body at the time of braking can be effectively suppressed.

No. of Pages : 39 No. of Claims : 9

(12) PATENT APPLICATION PUBLICATION
(19) INDIA
(22) Date of filing of Application :10/09/2012
(21) Application No.7897/DELNP/2012 A
(43) Publication Date : 21/03/2014

(54) Title of the invention : BALLAST FLOCCULATION AND SEDIMENTATION WATER TREATMENT SYSTEM WITH SIMPLIFIED SLUDGE RECIRCULATION AND PROCESS THEREFOR

(51) International classification :C02F11/00,C02F1/52,C02F11/12
(31) Priority Document No :NA
(32) Priority Date :NA
(33) Name of priority country :NA
(86) International Application No :PCT/CA2010/000261
Filing Date :25/02/2010
(87) International Publication No :WO 2011/103651
(61) Patent of Addition to Application Number :NA
Filing Date :NA
(62) Divisional to Application Number :NA
Filing Date :NA

(71)**Name of Applicant :**
1)VEOLIA WATER SOLUTIONS & TECHNOLOGIES SUPPORT
Address of Applicant :1 Place Montgolfier F 94417 St Maurice Cedex France
(72)**Name of Inventor :**
1)QUEVILLON Luc

(57) Abstract :
A process for water treatment including a combination of methods from the group comprising coagulation sedimentation flocculation and ballast flocculation which is further improved by the addition of a simplified sludge recirculation system. The recirculation system corresponding to this process allows higher sludge density as well as less significant water volume losses by making the sludge accumulating at the bottom of the sedimentation zone go through a hydro cyclone a certain number of times in repeated cycles thus augmenting the solid particles density of the extracted sludge. The system may also be controlled by a suspended solid analyser a flow meter and/or a timer. The present invention also includes a method of producing specific fluid flow control behaviour with this simplified sludge recirculation system which furthermore improves the efficiency of the process.

No. of Pages : 28 No. of Claims : 20

(12) PATENT APPLICATION PUBLICATION
(19) INDIA
(22) Date of filing of Application :06/09/2012
(21) Application No.2776/DEL/2012 A
(43) Publication Date : 21/03/2014

(54) Title of the invention : POWER SUPPLY CONTROLLER WITH MINIMUM-SUM MULTI-CYCLE MODULATION

(51) International classification :H02M
(31) Priority Document No :13/242,947
(32) Priority Date :23/09/2011
(33) Name of priority country :U.S.A.
(86) International Application No :NA
Filing Date :NA
(87) International Publication No : NA
(61) Patent of Addition to Application Number :NA
Filing Date :NA
(62) Divisional to Application Number :NA
Filing Date :NA

(71)**Name of Applicant :**
1)POWER INTEGRATIONS, INC.
Address of Applicant :5245 HELLYER AVENUE, SAN JOSE, CA 95138, U.S.A.
(72)**Name of Inventor :**
1)MINGMING MAO

(57) Abstract :
A power supply controller is disclosed. An example power supply controller includes a signal separator circuit coupled to generate a feedback signal in response to a sense signal representative of an output of a power supply. An error signal generator is coupled to generate an error signal in response to the feedback signal and a reference signal. A control circuit is coupled to generate a drive signal in response to the error signal. The drive signal is coupled to control switching of a switch of the power supply. A multi-cycle modulation circuit is included in the control circuit and is coupled to generate a skip signal in response to a start skip signal, a stop skip signal and a skip mask signal. The skip mask signal is generated in response to the skip signal. The start skip and stop skip signals are coupled to cause the drive signal to start skipping or stop skipping, respectively, on-time intervals of cycles. The skip mask signal is coupled to disable the start skip signal from causing the drive signal to start skipping the on-time intervals of cycles.

No. of Pages : 32 No. of Claims : 29

(12) PATENT APPLICATION PUBLICATION
(19) INDIA
(22) Date of filing of Application :10/09/2012
(21) Application No.7903/DELNP/2012 A
(43) Publication Date : 21/03/2014

(54) Title of the invention : AIR GUIDANCE SYSTEM

(51) International classification :H05K7/20
(31) Priority Document No :10 2010 016 507.7
(32) Priority Date :19/04/2010
(33) Name of priority country :Germany
(86) International Application No :PCT/EP2011/053900
Filing Date :15/03/2011
(87) International Publication No :WO 2011/131426
(61) Patent of Addition to Application Number :NA
Filing Date :NA
(62) Divisional to Application Number :NA
Filing Date :NA

(71)**Name of Applicant :**
1)RITTAL GMBH & CO. KG
Address of Applicant :Auf dem St¼tzelberg 35745 Herborn Germany
(72)**Name of Inventor :**
1)HARTMANN Reiner
2)SCHNEIDER Stefan
3)RONZHEIMER Claudia Christine

(57) Abstract :
The invention relates to an air guidance system having an air guidance housing (30) and an air passage grating (10) fastened thereto the air passage grating being held on the air guidance housing by means of a snap lock connection. In order to simplify maintenance of such an air guidance system the air guidance system carries at least one latch (35) having a snap in shoulder (35.1) that can be engaged in a snap lock seat (14.1) of the air passage grating. The air passage grating swivelably accommodates a handle (20) in a bearing seat said handle disengaging the latch from the snap lock seat when set from the locking position to the unlocking position.

No. of Pages : 9 No. of Claims : 7

(12) PATENT APPLICATION PUBLICATION
(19) INDIA
(22) Date of filing of Application :10/09/2012
(21) Application No.7904/DELNP/2012 A
(43) Publication Date : 21/03/2014

(54) Title of the invention : HEATING DEVICE FOR INSTALLATION IN A SWITCHGEAR CABINET

(51) International classification :H02B1/56
(31) Priority Document No :10 2010 016 177.2
(32) Priority Date :29/03/2010
(33) Name of priority country :Germany
(86) International Application No :PCT/EP2011/053260
Filing Date :04/03/2011
(87) International Publication No :WO 2011/120759
(61) Patent of Addition to Application Number :NA
Filing Date :NA
(62) Divisional to Application Number :NA
Filing Date :NA

(71)**Name of Applicant :**
1)RITTAL GMBH & CO. KG
Address of Applicant :Auf dem St¼tzelberg 35745 Herborn Germany
(72)**Name of Inventor :**
1)BRAUN R¼diger
2)LOH Friedhelm

(57) Abstract :
The invention relates to a heating device for installation in a switchgear cabinet having a support and a heating body wherein the support replaceably accommodates the heating body in a holder. Simple and secure mounting of the heating body on the support is achieved in that the holder has a contact surface to which limiting elements are attached in that the limiting elements immobilize the heating body in a form fitting manner transversely to the contact surface plane and in that one or a plurality of locking elements are provided in the region of the holder which immobilize the heating body in a form fitting manner perpendicularly to the contact surface.

No. of Pages : 12 No. of Claims : 7

(12) PATENT APPLICATION PUBLICATION
(19) INDIA
(22) Date of filing of Application :10/09/2012
(21) Application No.7905/DELNP/2012 A
(43) Publication Date : 21/03/2014

(54) Title of the invention : LOUVERED GRILLE

(51) International classification :H05K7/20
(31) Priority Document No :10 2010 016 505.0
(32) Priority Date :19/04/2010
(33) Name of priority country :Germany
(86) International Application No :PCT/EP2011/053898
Filing Date :15/03/2011
(87) International Publication No :WO 2011/131425
(61) Patent of Addition to Application Number :NA
Filing Date :NA
(62) Divisional to Application Number :NA
Filing Date :NA

(71)**Name of Applicant :**
1)RITTAL GMBH & CO. KG
Address of Applicant :Auf dem St¼tzelberg 35745 Herborn Germany
(72)**Name of Inventor :**
1)SCHNEIDER Stefan
2)WAGNER Steffen
3)HARTMANN Reiner

(57) Abstract :
The invention relates to a louvered grille for an air conduction housing comprising a plurality of louvers which are spaced apart from one another to form air passage openings wherein the louvers extend in the widthwise direction of the louvered grille and have an upper louver face that is directed toward the exterior and inclined transversely with respect to the vertical direction of the louvered grille. For better IP protection of such a louvered grille according to the invention the upper louver face of at least some of the louvers has a convex curvature in at least some areas of the louvers both in the widthwise direction of the louvered grille and in the in the vertical direction of the louvered grille.

No. of Pages : 10 No. of Claims : 11

(12) PATENT APPLICATION PUBLICATION
(19) INDIA
(22) Date of filing of Application :04/09/2012
(21) Application No.7696/DELNP/2012 A
(43) Publication Date : 21/03/2014

(54) Title of the invention : A NOVEL ETHANOLOGENIC *CLOSTRIDIUM* SPECIES *CLOSTRIDIUM COSKATII*

(51) International classification :C12N1/20,C12P7/06,C12R1/145
(31) Priority Document No :12/727320
(32) Priority Date :19/03/2010
(33) Name of priority country :U.S.A.
(86) International Application No :PCT/US2011/028711
Filing Date :16/03/2011
(87) International Publication No :WO 2011/116124
(61) Patent of Addition to Application Number :NA
Filing Date :NA
(62) Divisional to Application Number :NA
Filing Date :NA

(71)**Name of Applicant :**
1)COSKATA INC.
Address of Applicant :4575 Weaver Parkway Suite 100 Warrenville IL 60555 U.S.A.
(72)**Name of Inventor :**
1)ZAHN James A.
2)SAXENA Jyotisna

(57) Abstract :
Clostridium coskatiicoskatii22A novel Clostridia bacterial species (ATCC No. PTA 10522 PS02) is provided. Under anaerobic conditions C. can convert CO and/or H and/or CO to ethanol or acetate. Thus this novel bacterium is capable of transforming waste gases (e.g. syngas and refinery wastes) into useful products.

No. of Pages : 88 No. of Claims : 15

(12) PATENT APPLICATION PUBLICATION
(19) INDIA
(22) Date of filing of Application :04/09/2012
(21) Application No.7698/DELNP/2012 A
(43) Publication Date : 21/03/2014

(54) Title of the invention : ANTIBACTERIAL 5',5-DISUBSTITUTED 3,3'-DIALKOXY-2,2'-DIHYDROXY-1,1'-BIPHENYL COMPOUNDS AND RELATED METHODS

(51) International classification :A61K 31/09
(31) Priority Document No :60/662,992
(32) Priority Date :18/03/2005
(33) Name of priority country :U.S.A.
(86) International Application No :PCT/US2006/009212
Filing Date :14/03/2006
(87) International Publication No :WO 2006/101864
(61) Patent of Addition to Application Number :NA
Filing Date :NA
(62) Divisional to Application Number :7632/DELNP/2007
Filed on :14/03/2006

(71)**Name of Applicant :**
1)COLGATE-PALMOLIVE COMPANY
Address of Applicant :300 PARK AVENUE, NEW YORK, NY 10022 U.S.A.
(72)**Name of Inventor :**
1)SUBRAMANYAM RAVI

(57) Abstract :
The invention provides an antiplaque oral composition that includes an orally acceptable carrier; and an antibacterially effective amount of a compound of structure (I) In the structure, R1 and R2 are independently selected from a lower C1-4 alkyl group and R3 and R4 are independently an alkenyl or alkyl group having from 1 to 20 carbon atoms. Also included in the invention are toothpastes or tooth gels that include at least one humectant; at least one abrasive compound; and an antibacterially effective amount of the compound represented by the structure of formula (I). Also provided are methods of inhibiting bacterial growth in the oral cavity of an animal by application of the compound of formula (I).

No. of Pages : 17 No. of Claims : 12

(12) PATENT APPLICATION PUBLICATION
(19) INDIA
(22) Date of filing of Application :11/09/2012
(21) Application No.7916/DELNP/2012 A
(43) Publication Date : 21/03/2014

(54) Title of the invention : LIQUID ACTIVATING AND DISPENSING VALVE WITH VERTICAL OUTLET AND MANUAL PUMP

(51) International classification :G01F11/16,F16K21/16,B67D3/02
(31) Priority Document No :CO1015880
(32) Priority Date :12/02/2010
(33) Name of priority country :COLUMBIA
(86) International Application No :PCT/IB2011/050587
Filing Date :11/02/2011
(87) International Publication No :WO 2011/098977
(61) Patent of Addition to Application Number :NA
Filing Date :NA
(62) Divisional to Application Number :NA
Filing Date :NA

(71)**Name of Applicant :**
1)GAVIRIA SANTACRUZ Alberto
Address of Applicant :Avenida 5A Norte #21 35 Cali COLUMBIA
(72)**Name of Inventor :**
1)GAVIRIA SANTACRUZ Alberto

(57) Abstract :
This invention relates to a liquid activating and dispensing valve with vertical outlet which is attached to the upper part of any type of manual pump for extracting liquids contained in a recipient. Said valve is activated manually to dispense a suitable measure by outputting the fluids vertically upwards using a single hand both to push the valve downwards and to receive the liquid coming out of the upper part of the valve all simultaneously in a single movement without needing to handle incline or squeeze the recipient.

No. of Pages : 25 No. of Claims : 6

(12) PATENT APPLICATION PUBLICATION
(19) INDIA
(22) Date of filing of Application :11/09/2012
(21) Application No.7917/DELNP/2012 A
(43) Publication Date : 21/03/2014

(54) Title of the invention : METHOD AND SYSTEM FOR CONDUCTING IDENTITY MATCHING

(51) International classification :G06F21/00
(31) Priority Document No :12/714568
(32) Priority Date :01/03/2010
(33) Name of priority country :U.S.A.
(86) International Application No :PCT/US2011/026009
Filing Date :24/02/2011
(87) International Publication No :WO 2011/109208
(61) Patent of Addition to Application Number :NA
Filing Date :NA
(62) Divisional to Application Number :NA
Filing Date :NA

(71)**Name of Applicant :**
1)DAON HOLDINGS LIMITED
Address of Applicant :c/o The Harbour Trust Co. Ltd. P.O. Box 1787 One Capital Place Georgtowngrand Cayman Cayman Island
(72)**Name of Inventor :**
1)LANGLEY Richard Jay

(57) Abstract :
A method of managing large scale biometric data identity matching includes identifying a plurality of biometric modalities to be used in conducting identity matches determining one of the biometric modalities to be a primary biometric modality and determining whether at least one matching algorithm is compatible with matrix entries. When the at least one matching algorithm is compatible with a matrix entry the method includes assigning a plurality of matching systems to the matrix entry. The matching systems are configured to conduct 1 : 1 or 1 :few matching after conducting a 1 :N identity matching. Furthermore the method includes comparing a probe against enrollment data records stored in a corresponding matching system and storing information regarding a matching enrollment data record in a queue when the probe matches an enrollment data record.

No. of Pages : 36 No. of Claims : 16

(12) PATENT APPLICATION PUBLICATION
(19) INDIA
(22) Date of filing of Application :11/09/2012
(21) Application No.7918/DELNP/2012 A
(43) Publication Date : 21/03/2014

(54) Title of the invention : CONTAINER SEAL WITH DEFLECTING LIP

(51) International classification :B65D43/02
(31) Priority Document No :12/824383
(32) Priority Date :28/06/2010
(33) Name of priority country :U.S.A.
(86) International Application No :PCT/US2011/041439
Filing Date :22/06/2011
(87) International Publication No :WO 2012/005950
(61) Patent of Addition to Application Number :NA
Filing Date :NA
(62) Divisional to Application Number :NA
Filing Date :NA

(71)**Name of Applicant :**
1)MEAD JOHNSON NUTRITION COMPANY
Address of Applicant :2400 W. Lloyd Expressway Evansville Indiana 47721 0001 U.S.A.
(72)**Name of Inventor :**
1)HORTON Thomas C.
2)WIGGINS Robin
3)MINNETTE Jeffrey
4)JULIAN Randall

(57) Abstract :
A container for storing matter provides a container body (12) having a resilient flange (20) protruding outward therefrom to form a seal between the container body and a mating closure (14). The resilient flange (20) is deflected by the inner surface (30) of the mating closure to form a first releasable seal (44) between the closure (14) and the container body (12). The resilient flange (20) includes an aspect ratio of length divided by thickness. A second releasable seal (54) is formed in some embodiments between the upper edge of the side wall (16) and the closure (14) when the mating closure is positioned on the container body.

No. of Pages : 23 No. of Claims : 13

(12) PATENT APPLICATION PUBLICATION
(19) INDIA
(22) Date of filing of Application :04/09/2012
(21) Application No.7705/DELNP/2012 A
(43) Publication Date : 21/03/2014

(54) Title of the invention : REDOX FLOW BATTERY

(51) International classification :H01M8/18
(31) Priority Document No :2010056441
(32) Priority Date :12/03/2010
(33) Name of priority country :Japan
(86) International Application No :PCT/JP2011/055418
Filing Date :08/03/2011
(87) International Publication No :WO 2011/111717
(61) Patent of Addition to Application Number :NA
Filing Date :NA
(62) Divisional to Application Number :NA
Filing Date :NA

(71)**Name of Applicant :**
1)SUMITOMO ELECTRIC INDUSTRIES LTD.
Address of Applicant :5 33 Kitahama 4 chome Chuo ku Osaka shi Osaka 5410041 Japan
(72)**Name of Inventor :**
1)DONG Yongrong
2)SHIGEMATSU Toshio
3)KUMAMOTO Takahiro
4)KUBATA Michiru

(57) Abstract :
Disclosed are: a redox flow battery (RF battery) that can minimize the precipitation of precipitates while still producing a high emf; and a method for running a redox flow battery. The disclosed RF battery (100) charges and discharges a battery cell by supplying a positive electrode electrolyte solution and a negative electrode electrolyte solution thereto. Said battery cell is provided with a positive electrode (104) a negative electrode (105) and a barrier membrane (101) interposed between the electrodes (104 and 105). The positive electrode electrolyte solution contains either manganese ions or both manganese ions and titanium ions. The negative electrode electrolyte solution contains at least one of the following metal ions: titanium ions vanadium ions chromium ions zinc ions and lead ions. By including titanium ions in the positive electrode electrolyte solution and running the RF battery (100) such that the charging depth of the positive electrode electrolyte solution is at most 90% the precipitation of precipitates such as MnO is minimized resulting in good charging and discharging characteristics. Also the disclosed RF battery (100) produces an emf equivalent to or greater than that of conventional vanadium redox flow batteries.

No. of Pages : 73 No. of Claims : 22

(12) PATENT APPLICATION PUBLICATION
(19) INDIA
(22) Date of filing of Application :06/09/2012
(21) Application No.7802/DELNP/2012 A
(43) Publication Date : 21/03/2014

(54) Title of the invention : CD37 BINDING MOLECULES AND IMMUNOCONJUGATES THEREOF

(51) International classification :A61K39/395
(31) Priority Document No :61/313628
(32) Priority Date :12/03/2010
(33) Name of priority country :U.S.A.
(86) International Application No :PCT/US2011/028172
Filing Date :11/03/2011
(87) International Publication No :WO 2011/112978
(61) Patent of Addition to Application Number :NA
Filing Date :NA
(62) Divisional to Application Number :NA
Filing Date :NA

(71)**Name of Applicant :**
1)IMMUNOGEN INC.
Address of Applicant :830 Winter Street Waltham Massachusetts 02451 U.S.A.
(72)**Name of Inventor :**
1)DECKERT Jutta
2)PARK Peter
3)TAVARES Daniel
4)RUI Lingyun

(57) Abstract :
Novel anti cancer agents including but not limited to antibodies and immunoconjugates that bind to CD37 are provided. Methods of using the agents antibodies or immunoconjugates such as methods of inhibiting tumor growth are further provided.

No. of Pages : 187 No. of Claims : 66

(12) PATENT APPLICATION PUBLICATION
(19) INDIA
(22) Date of filing of Application :11/09/2012
(21) Application No.7925/DELNP/2012 A
(43) Publication Date : 21/03/2014

(54) Title of the invention : CONTAINER WITH SCOOPING UNTENSIL AND SCOOPING RETAINER IN THE CLOSURE

(51) International classification :B65D77/24,B65D51/24
(31) Priority Document No :12/824447
(32) Priority Date :28/06/2010
(33) Name of priority country :U.S.A.
(86) International Application No :PCT/US2011/041616
Filing Date :23/06/2011
(87) International Publication No :WO 2012/009125
(61) Patent of Addition to Application Number :NA
Filing Date :NA
(62) Divisional to Application Number :NA
Filing Date :NA

(71)**Name of Applicant :**
1)MEAD JOHNSON NUTRITION COMPANY
Address of Applicant :2400 W. Lloyd Expressway Evansville Indiana 47721 0001 U.S.A.
(72)**Name of Inventor :**
1)HORTON Thomas C.
2)WIGGINS Robin
3)MINNETTE Jeffrey
4)JULIAN Randall

(57) Abstract :
An improved container (10) provides a container body (12) and a closure (14). In some embodiments a scooping utensil retainer (20) is disposed on the closure. The scooping utensil retainer includes opposing flanges (30 32) protruding from the closure surface (18). A flange rib (34) protrudes from the first flange (30) into the flange gap extending from the closure surface to the distal end of the flange. A tapered retainer gap (42) is provided between flanges for resiliently clamping the handle (24) of a scooping utensil (22). In some embodiments the closure can include an annular ridge (110) shaped for engaging a downwardly extending skirt (98) on a like container when two like containers are vertically stacked. In some embodiments the container body includes an in mold label (124) affixed to a substantially straight side wall and covering at least about 95% of the exterior surface area of the container body.

No. of Pages : 30 No. of Claims : 20

(12) PATENT APPLICATION PUBLICATION
(19) INDIA
(22) Date of filing of Application :11/09/2012
(21) Application No.7926/DELNP/2012 A
(43) Publication Date : 21/03/2014

(54) Title of the invention : REFILLABLE PRODUCT DISPENSER SYSTEM

(51) International classification :B65D77/04
(31) Priority Document No :12/824366
(32) Priority Date :28/06/2010
(33) Name of priority country :U.S.A.
(86) International Application No :PCT/US2011/041614
Filing Date :23/06/2011
(87) International Publication No :WO 2012/009124
(61) Patent of Addition to Application Number :NA
Filing Date :NA
(62) Divisional to Application Number :NA
Filing Date :NA

(71)**Name of Applicant :**
1)MEAD JOHNSON NUTRITION COMPANY
Address of Applicant :2400 W. Lloyd Expressway Evansville Indiana 47721 0001 U.S.A.
(72)**Name of Inventor :**
1)SIDDIQUI Kamran
2)SCHAUER Brigitte
3)SLY Pat
4)WALKER Hollie

(57) Abstract :
A refillable product dispenser system for powdered infant formula includes a reusable container (16) having an initial product bag (18) received in the container. Refills for the reusable container are provided in similar refill product bags which may be of lesser volume than the initial product bag. The refill bags may be packaged in a refill outer package (22) containing two or more refill bags (24 26).

No. of Pages : 22 No. of Claims : 19

(12) PATENT APPLICATION PUBLICATION
(19) INDIA
(22) Date of filing of Application :11/09/2012
(21) Application No.7927/DELNP/2012 A
(43) Publication Date : 21/03/2014

(54) Title of the invention : DEVICE FOR HOLDING AND REPLACING A CASTING PLATE IN A CASTING INSTALLATION METALLIC CASING OF CASTING PLATE AND CASTING PLATE PROVIDED WITH MEANS INTERACTING WITH A DEVICE DETECTOR

(51) International classification :B22D41/24,B22D41/34,B22D41/38
(31) Priority Document No :10157129.7
(32) Priority Date :19/03/2010
(33) Name of priority country:EPO
(86) International Application No :PCT/EP2011/001323
Filing Date :17/03/2011
(87) International Publication No :WO 2011/113596
(61) Patent of Addition to Application Number :NA
Filing Date :NA
(62) Divisional to Application Number :NA
Filing Date :NA

(71)**Name of Applicant :**
1)VESUVIUS GROUP S.A.
Address of Applicant :Rue de Douvrain 17 B 7011 Ghlin Belgium
(72)**Name of Inventor :**
1)BOISDEQUIN Vincent
2)COLLURA Mariano

(57) Abstract :
The invention relates to a device for holding and replacing a casting plate in a continuous casting installation metallurgical vessel. A detector limit switch assembly automatically moves a casting plate to the casting position or to the sealing position depending on whether a replacement plate is on standby on the device or not. The invention relates to a metallic casing of casting plate and a casting plate provided with means interacting with the device detector.

No. of Pages : 31 No. of Claims : 19

(12) PATENT APPLICATION PUBLICATION
(19) INDIA
(22) Date of filing of Application :06/09/2012
(21) Application No.2770/DEL/2012 A
(43) Publication Date : 21/03/2014

(54) Title of the invention : OXYGEN-CONSUMING ELECTRODE AND PROCESS FOR PRODUCTION THEREOF

(51) International classification :C25B
(31) Priority Document No :102011083316.1
(32) Priority Date :23/09/2011
(33) Name of priority country :Germany
(86) International Application No :NA
Filing Date :NA
(87) International Publication No : NA
(61) Patent of Addition to Application Number :NA
Filing Date :NA
(62) Divisional to Application Number :NA
Filing Date :NA

(71)**Name of Applicant :**
1)BAYER INTELLECTUAL PROPERTY GMBH
Address of Applicant :ALFRED-NOBEL-STRASSE 10, 40789 MONHEIM, GERMANY
(72)**Name of Inventor :**
1)JAKOB JORISSEN
2)GREGOR POLCYN
3)FLORIAN VERFUSS
4)GABRIEL TOEPELL

(57) Abstract :
An oxygen-consuming electrode is described, more particularly for use in chloralkali electrolysis, comprising a novel catalyst coating, as is an electrolysis apparatus. Also described is a production process for the oxygen-consuming electrode and the use thereof in chloralkali electrolysis or fuel cell technology. The oxygen-consuming electrode is based on a gas diffusion layer as a porous film of a fluorinated polymer, into which fine crystal needles of a catalyst metal have been introduced as the catalytically active component and are connected with electrical conduction to the current collector.

No. of Pages : 15 No. of Claims : 20

(12) PATENT APPLICATION PUBLICATION
(19) INDIA
(22) Date of filing of Application :06/09/2012
(21) Application No.2771/DEL/2012 A
(43) Publication Date : 21/03/2014

(54) Title of the invention : EMBROIDERY MACHINE

(51) International classification :D01H1/00
(31) Priority Document No :01478/11
(32) Priority Date :08/09/2011
(33) Name of priority country :Switzerland
(86) International Application No :NA
Filing Date :NA
(87) International Publication No : NA
(61) Patent of Addition to Application Number :NA
Filing Date :NA
(62) Divisional to Application Number :NA
Filing Date :NA

(71)**Name of Applicant :**
1)LAESSER AG
Address of Applicant :HOHENEMSERSTRASSE 17, 9444 DIEPOLDSAU, SWITZERLAND
(72)**Name of Inventor :**
1)FRANZ LAESSER

(57) Abstract :
An embroidery machine, in particular a shuttle embroidery machine or quilting machine, has a front throat plate with a needle hole and at least one shuttle race provided behind the front throat plate and having a running surface over which a shuttle can be moved back and forth. A shuttle drive for the shuffle comprises a transmission (not shown in detail) :which is connected to a driver device for generating the back-and-forth movement. A needle guide element (41) which runs along with the shuttle drive and is arranged in front of the shuttle pushes the needle (43) back into the needle channel (39) so that a collision between the shuttle (15) and the needle (43) is reliably avoided.

No. of Pages : 19 No. of Claims : 9

(12) PATENT APPLICATION PUBLICATION
(19) INDIA
(22) Date of filing of Application :06/09/2012
(21) Application No.2772/DEL/2012 A
(43) Publication Date : 21/03/2014

(54) Title of the invention : A CONTRAST AGENT PERFUSION ADAPTIVE IMAGING SYSTEM

(51) International classification :A61B
(31) Priority Document No :61/532,587
(32) Priority Date :09/09/2011
(33) Name of priority country :U.S.A.
(86) International Application No :NA
Filing Date :NA
(87) International Publication No : NA
(61) Patent of Addition to Application Number :NA
Filing Date :NA
(62) Divisional to Application Number :NA
Filing Date :NA

(71)**Name of Applicant :**
1)SIEMENS MEDICAL SOLUTIONS USA, INC.
Address of Applicant :51 VALLEY STREAM PARKWAY, MALVERN, PA 19355-1406, U.S.A.
2)SIEMENS AKTIENGESELLSCHAFT
(72)**Name of Inventor :**
1)KATHARINE LYNN ROWLEY GRANT
2)BERNHARD SCHMIDT

(57) Abstract :
An imaging system selects a medical imaging protocol using a repository of information associating multiple ranges of contrast agent peak time with corresponding different imaging protocols. An imaging protocol comprises a method for acquiring images using an imaging system and using data identifying at least one of (a) an imaging rate within an imaging scan cycle and (b) an interval between imaging scans. A contrast agent peak time comprises a time a contrast agent concentration substantially reaches a peak value in an anatomical region of interest of a patient relative to a time of start of contrast agent injection. A contrast agent peak time detector detects a contrast agent peak time. An imaging processor adaptively selects an imaging protocol from the imaging protocols in response to a comparison of a detected contrast agent peak time with at least one of the plurality of ranges.

No. of Pages : 24 No. of Claims : 24

(12) PATENT APPLICATION PUBLICATION
(19) INDIA
(22) Date of filing of Application :11/09/2012
(21) Application No.7937/DELNP/2012 A
(43) Publication Date : 21/03/2014

(54) Title of the invention : STEEL PIPE PRODUCTION EQUIPMENT

(51) International classification :B21B23/00,B21C37/30,B21C51/00
(31) Priority Document No :2010069181
(32) Priority Date :25/03/2010
(33) Name of priority country :Japan
(86) International Application No :PCT/JP2011/057103
Filing Date :24/03/2011
(87) International Publication No :WO 2011/118681
(61) Patent of Addition to Application Number :NA
Filing Date :NA
(62) Divisional to Application Number :NA
Filing Date :NA

(71)**Name of Applicant :**
1)Sumitomo Metal Industries Ltd.
Address of Applicant :5 33 Kitahama 4 chome Chuo ku Osaka shi Osaka 5410041 Japan
(72)**Name of Inventor :**
1)HIGUCHI Keiji
2)YANO Yuuichi
3)ARITA Tsutomu
4)MURATA Kei

(57) Abstract :
Disclosed is steel pipe production equipment that has excellent steel pipe production efficiency and can carefully manage the traceability of the steel pipes. The steel pipe (P) production equipment (100) is equipped with a pipe production line (10) a heat treatment line (20) that is directly connected to the pipe production line and a refinement line (30) that is directly connected to the heat treatment line and is characterized in that at least a correction step for correcting bending in the steel pipe an ultrasonic flaw detection step for detecting flaws in the steel pipe using ultrasonic waves a surface inspection step for inspecting the surface of the pipe a hydraulic test step for testing the hydraulic pressure in the steel pipe an actual weight/length measurement step for measuring the weight and length of the steel pipe and a marking step for marking the steel pipe with a stencil are executed in the refinement line (30) and in that the steel pipe is not conveyed off the line en route from the entrance of the pipe production line until the exit of refinement line.

No. of Pages : 17 No. of Claims : 2

(12) PATENT APPLICATION PUBLICATION
(19) INDIA
(22) Date of filing of Application :04/09/2012
(21) Application No.2729/DEL/2012 A
(43) Publication Date : 21/03/2014

(54) Title of the invention : HANDWRITTEN INFORMATION INPUTTING DEVICE AND PORTABLE ELECTRONIC APPARATUS INCLUDING HANDWRITTEN INFORMATION INPUTTING DEVICE

(51) International classification	:G06F
(31) Priority Document No	:2012-036910
(32) Priority Date	:23/02/2012
(33) Name of priority country	:Japan
(86) International Application No	:NA
Filing Date	:NA
(87) International Publication No	: NA
(61) Patent of Addition to Application Number	:NA
Filing Date	:NA
(62) Divisional to Application Number	:NA
Filing Date	:NA

(71)**Name of Applicant :**
1)WACOM CO., LTD.
Address of Applicant :2-510-1 TOYONODAI, KAZO-SHI, SAITAMA 349-1148, JAPAN
(72)**Name of Inventor :**
1)JOSEPH SLIGER

(57) Abstract :
A handwritten information inputting device includes an inputting region into which handwritten information is inputted with a pointer such as an electronic pen or a finger. The device also includes a function disposition region in which a plurality of operational elements (e.g., graphic icons) are disposed, each assigned a process related to the inputted handwritten information such as enlarging or rotating the inputted handwritten information. In response to a continuous operation for a defined period of time of any of the operational elements, operational element disposition information regarding the operational elements disposed in the function disposition region is displayed on an external display apparatus, to which the handwritten information inputting device is connected. Also, the operated (selected) operational element is displayed visually distinguishable from the rest of the operational elements. Thus, an operator can confirm his operation of the operational elements without taking his eyes off the external display apparatus.

No. of Pages : 71 No. of Claims : 26

(12) PATENT APPLICATION PUBLICATION
(19) INDIA
(22) Date of filing of Application :04/09/2012
(21) Application No.7708/DELNP/2012 A
(43) Publication Date : 21/03/2014

(54) Title of the invention : ABRASIVE GRAINS BASED ON ZIRCONIA ALUMINA

(51) International classification :C09K3/14
(31) Priority Document No :NA
(32) Priority Date :NA
(33) Name of priority country :NA
(86) International Application No :PCT/EP2010/002882
Filing Date :10/05/2010
(87) International Publication No :WO 2011/141037
(61) Patent of Addition to Application Number :NA
Filing Date :NA
(62) Divisional to Application Number :NA
Filing Date :NA

(71)**Name of Applicant :**
1)CENTER FOR ABRASIVES AND REFRACTORIES RESEARCH & DEVELOPMENT C.A.R.R.D. GMBH
Address of Applicant :Seebacher Allee 64 9524 Villach Austria
(72)**Name of Inventor :**
1)KNUTH Gebhardt

(57) Abstract :
The invention relates to abrasive grains based on zirconia alumina melted in an electric arc furnace comprising a content of 52 to 62 wt % Al2O3 and 35 to 45 wt % ZrO2 wherein the high temperature phases of the zirconia are stabilized by a combination of reduced Ti compounds and yttrium oxide.

No. of Pages : 24 No. of Claims : 5

(12) PATENT APPLICATION PUBLICATION
(19) INDIA
(22) Date of filing of Application :04/09/2012
(21) Application No.7709/DELNP/2012 A
(43) Publication Date : 21/03/2014

(54) Title of the invention : COMBINATION SHAVING AND TRIMMING DEVICE

(51) International classification :B26B19/38,B26B21/40
(31) Priority Document No :12/722840
(32) Priority Date :12/03/2010
(33) Name of priority country :U.S.A.
(86) International Application No :PCT/US2011/027563
Filing Date :08/03/2011
(87) International Publication No :WO 2011/112592
(61) Patent of Addition to Application Number :NA
Filing Date :NA
(62) Divisional to Application Number :NA
Filing Date :NA

(71)**Name of Applicant :**
1)THE GILLETTE COMPANY
Address of Applicant :World Shaving Headquarters IP/Legal Patent Department 3E One Gillette Park Boston Massachusetts 02127 U.S.A.
(72)**Name of Inventor :**
1)REHBEIN Stefan
2)PEREZ LOPEZ Cirilo Javier
3)ROENNEBERG Gerrit
4)MAICHEL Michael

(57) Abstract :
A combination shaving and trimming device (10) includes a handle (12) having an upper end (14) and lower end a powered trimmer (30) disposed adjacent the upper end a wet shaving razor attachment (20) adapted for mounting over the trimmer onto the upper end of the handle. The wet shaving razor attachment is removably connected to the trimmer via a releasable locking mechanism (22).

No. of Pages : 25 No. of Claims : 15

(12) PATENT APPLICATION PUBLICATION
(19) INDIA
(22) Date of filing of Application :11/09/2012
(21) Application No.7930/DELNP/2012 A
(43) Publication Date : 21/03/2014

(54) Title of the invention : THERMOSTATIC VALVE HAVING A SLEEVE

(51) International classification :F16K31/00,F01P7/16,G05D23/02
(31) Priority Document No :1051743
(32) Priority Date :11/03/2010
(33) Name of priority country :France
(86) International Application No :PCT/FR2011/050472
Filing Date :08/03/2011
(87) International Publication No :WO 2011/110783
(61) Patent of Addition to Application Number :NA
Filing Date :NA
(62) Divisional to Application Number :NA
Filing Date :NA

(71)**Name of Applicant :**
1)VERNET
Address of Applicant :21/27 Route dArpajon F 91340 Ollainville France
(72)**Name of Inventor :**
1)ROMAN Jean Michel

(57) Abstract :
The invention relates to a valve (1) which comprises a housing (10) defining fluid inlet and outlet openings (11 12) as well as a sleeve (20) for controlling the circulation of said fluid through the housing the movement of said sleeve along the axis (X X) thereof being controlled by a thermostatic element (40). In order to increase the maximum flow of fluid said valve can take in the valve also comprises a seat part (30) which is fixedly mounted on the housing (10) and which includes a fluid tight wall (31) one of the two opposite surfaces thereof extending transversely to the axis (X X) of the sleeve (20) to define a seat (32) for bearing the sleeve (20) while the other one of said two opposite surfaces defines between the latter and a wall of the housing (1) in the direction of the axis (X X) of the sleeve a free space (V) into which one (11) of the openings (11 12) leads and through which the fluid flows being distributed over the entire periphery of the sleeve when said sleeve is in the open position thereof.

No. of Pages : 15 No. of Claims : 10

(12) PATENT APPLICATION PUBLICATION
(19) INDIA
(22) Date of filing of Application :11/09/2012
(21) Application No.7931/DELNP/2012 A
(43) Publication Date : 21/03/2014

(54) Title of the invention : GROMMET

(51) International classification :H02G3/22,B60R16/02,H01B17/58
(31) Priority Document No :2010076209
(32) Priority Date :29/03/2010
(33) Name of priority country :Japan
(86) International Application No :PCT/JP2011/051871
Filing Date :31/01/2011
(87) International Publication No :WO 2011/122091
(61) Patent of Addition to Application Number :NA
Filing Date :NA
(62) Divisional to Application Number :NA
Filing Date :NA

(71)**Name of Applicant :**
1)SUMITOMO WIRING SYSTEMS LTD.
Address of Applicant :1 14 Nishisuehiro cho Yokkaichi shi Mie 5108503 Japan
2)SUZUKI MOTOR CORPORATION
(72)**Name of Inventor :**
1)SUEHIRO Shinichi
2)KURODA Masaki
3)TANAHASHI Hisayuki
4)YAMAMOTO Hiroya

(57) Abstract :
Disclosed is a grommet such as a door grommet the installed position of which is opened and closed wherein buckling thereof is prevented from happening. The grommet which is comprised of rubber or elastomer and which is to be externally fitted onto a wire harness bridging a vehicle body panel and an opening/closing body comprised of a door or a trunk lid of a vehicle is provided with a pleated cylindrical section (2); bent cylindrical sections (3 4) that connect to the end sections of the pleated cylindrical section; and large diameter cylindrical sections (5 6) arranged at the front tip of the bent cylindrical sections. Vehicle body latching recess sections (7 8) are formed on the outer circumference faces of the large diameter cylindrical sections or resin inner members with vehicle body latching pawls formed thereon are internally fitted into the large diameter cylindrical sections and reinforcement ribs (10) for withstanding buckling are formed on the outer circumference faces and/or the inner circumference faces of the bent cylindrical sections (3 4).

No. of Pages : 36 No. of Claims : 1

(12) PATENT APPLICATION PUBLICATION
(19) INDIA
(22) Date of filing of Application :31/08/2012
(21) Application No.7609/DELNP/2012 A
(43) Publication Date : 21/03/2014

(54) Title of the invention : METHODS FOR ENHANCING THE PALATABILITY OF COMESTIBLE COMPOSITIONS

(51) International classification :A23K1/18
(31) Priority Document No :61/340924
(32) Priority Date :24/03/2010
(33) Name of priority country :U.S.A.
(86) International Application No :PCT/US2011/000514
Filing Date :18/03/2011
(87) International Publication No :WO 2011/119210
(61) Patent of Addition to Application Number :NA
Filing Date :NA
(62) Divisional to Application Number :NA
Filing Date :NA

(71)**Name of Applicant :**
1)NESTEC S.A.
Address of Applicant :Avenue Nestle 55 CH 1800 Vevey Switzerland
(72)**Name of Inventor :**
1)TISSOT FAVRE Delphine
2)PAN Yuanlong
3)BHATNAGAR Sandeep
4)LEYVA Manuel Felipe
5)LYN Sandra

(57) Abstract :
The invention provides methods for enhancing the palatability of comestible compositions by combining the comestible compositions with a palatability enhancing amount of one or more fatty acid alkanolamides and the compositions produced by such methods.

No. of Pages : 24 No. of Claims : 67

(12) PATENT APPLICATION PUBLICATION
(19) INDIA
(22) Date of filing of Application :05/09/2012
(21) Application No.7726/DELNP/2012 A
(43) Publication Date : 21/03/2014

(54) Title of the invention : MULTI LAYER OPTICAL RECORDING MEDIUM

(51) International classification :G11B7/24
(31) Priority Document No :2010063998
(32) Priority Date :19/03/2010
(33) Name of priority country :Japan
(86) International Application No :PCT/JP2011/001429
Filing Date :11/03/2011
(87) International Publication No :WO 2011/114674
(61) Patent of Addition to Application Number :NA
Filing Date :NA
(62) Divisional to Application Number :NA
Filing Date :NA

(71)**Name of Applicant :**
1)SONY CORPORATION
Address of Applicant :1 7 1 Konan Minato ku Tokyo 1080075 Japan
(72)**Name of Inventor :**
1)SAKAMOTO Tetsuhiro
2)MIYAMOTO Hirotaka
3)NAKANO Jun
4)YASUDA Kouichi

(57) Abstract :
A problem is to prevent multiple beam interference which is a practical problem caused by stray light, in relation to a multi-layer optical recording medium having N (N ‰ 5) number of boundary surfaces where incident light could be reflected. To resolve that problem, each boundary surface of M units (M ‰ N) elected from an N number of boundary surfaces is defined as Li (i = 0, 1, ¦ M; at this time, as the value of i is smaller, the boundary surface formed at a bottom layer side looking from an uppermost surface as a light incidence plane), and when j < k ‰ l < m ‰ M, satisfy a condition that a difference of the total sum of Sj - k of spacer thicknesses formed between the boundary surfaces of Lj and Lk, and the total sum of Sl - m ,Sj-k ˆ' Sl-m, of spacer thicknesses formed between the boundary surfaces of Ll and Lm, is larger than nÎ»/NA2 (n = refraction index of the spacer) for the boundary surface Lk, boundary surface Lm, boundary surface Ll, and boundary surface Lj that generate stray light by reflecting three times via Lk (or Ll) †' Lm †' Ll (or Lk), when light is converged at an object lens of a numerical aperture NA by a wavelength Î» with boundary surface Lj as a target.

No. of Pages : 50 No. of Claims : 4

(12) PATENT APPLICATION PUBLICATION
(19) INDIA
(22) Date of filing of Application :11/09/2012
(21) Application No.7941/DELNP/2012 A
(43) Publication Date : 21/03/2014

(54) Title of the invention : METHOD AND APPARATUS FOR RECORDING ELECTRICAL CONSUMPTION AND PRODUCTION

(51) International classification :H02J3/00,H02J13/00
(31) Priority Document No :10 2010 002 914.9
(32) Priority Date :16/03/2010
(33) Name of priority country :Germany
(86) International Application No :PCT/EP2011/050588
Filing Date :18/01/2011
(87) International Publication No :WO 2011/113623
(61) Patent of Addition to Application Number :NA
Filing Date :NA
(62) Divisional to Application Number :NA
Filing Date :NA

(71)**Name of Applicant :**
1)ROBERT BOSCH GMBH
Address of Applicant :Postfach 30 02 20 70442 Stuttgart Germany
(72)**Name of Inventor :**
1)FRIEDE Wolfgang
2)DA SILVA Pedro

(57) Abstract :
The invention relates to a method and device for recording electrical consumption and production in an energy management network which has at least one energy management unit and wherein a number of electrical consumers or consumer groups and a number of producers are interconnected in accordance with the purchase price and the supply numeration in a power distribution system by means of associated components in the form of switching elements and energy meters which are influenced or evaluated by the energy management unit.

No. of Pages : 25 No. of Claims : 13

(12) PATENT APPLICATION PUBLICATION
(19) INDIA
(22) Date of filing of Application :11/09/2012
(21) Application No.7942/DELNP/2012 A
(43) Publication Date : 21/03/2014

(54) Title of the invention : ARRANGEMENT COMPRISING AN ELECTRIC AND/OR ELECTRONIC MODULE AND A CIRCUIT CARRIER

(51) International classification :H05K3/32
(31) Priority Document No :10 2010 002 943.2
(32) Priority Date :17/03/2010
(33) Name of priority country :Germany
(86) International Application No :PCT/EP2011/053976
Filing Date :16/03/2011
(87) International Publication No :WO 2011/113863
(61) Patent of Addition to Application Number :NA
Filing Date :NA
(62) Divisional to Application Number :NA
Filing Date :NA

(71)**Name of Applicant :**
1)ROBERT BOSCH GMBH
Address of Applicant :Postfach 30 02 20 70442 Stuttgart Germany
(72)**Name of Inventor :**
1)HEIM Michael
2)BRAUN Sigmund

(57) Abstract :
The invention relates to an arrangement comprising an electric and/or electronic module (10) and a circuit carrier (12) wherein at least one electric connecting line (14) of the electric and/or electronic module (10) can be accommodated in a recess (16) of the circuit carrier (12). The arrangement comprises at least one clamping element (18a 18b 18c 18d) which immobilizes the at least one connecting line (14) in the recess (16) once it has been introduced into the recess (16).

No. of Pages : 22 No. of Claims : 10

(12) PATENT APPLICATION PUBLICATION
(19) INDIA
(22) Date of filing of Application :11/09/2012
(21) Application No.7943/DELNP/2012 A
(43) Publication Date : 21/03/2014

(54) Title of the invention : SAFETY DEVICE FOR A PERISTALTIC PUMP

(51) International classification :F04B43/12,F04B49/10
(31) Priority Document No :10 2010 002 133.4
(32) Priority Date :18/02/2010
(33) Name of priority country :Germany
(86) International Application No :PCT/EP2011/052389
Filing Date :18/02/2011
(87) International Publication No :WO 2011/101430
(61) Patent of Addition to Application Number :NA
Filing Date :NA
(62) Divisional to Application Number :NA
Filing Date :NA

(71)**Name of Applicant :**
1)FRESENIUS MEDICAL CARE DEUTSCHLAND GMBH
Address of Applicant :Else Krner Strae 1 61352 Bad Homburg Germany
(72)**Name of Inventor :**
1)NRNBERGER Thomas

(57) Abstract :
A peristaltic pump preferably for a dialysis device has a rotor receptacle and has a rotor which can be connected to the rotor receptacle. Said rotor has preferably a multiplicity of marking devices the type and/or arrangement of which serve(s) to encode at least one characteristic of the rotor. The peristaltic pump furthermore has a safety device with at least one sensing device by means of which the at least one characteristic of the rotor encoded by means of the marking device(s) can be checked and which can be activated as a function of at least one of said characteristics of the rotor.

No. of Pages : 16 No. of Claims : 13

(12) PATENT APPLICATION PUBLICATION
(19) INDIA
(22) Date of filing of Application :04/09/2012
(21) Application No.2733/DEL/2012 A
(43) Publication Date : 21/03/2014

(54) Title of the invention : VEHICLE BODY

(51) International classification :F16F
(31) Priority Document No :VR2011A000174
(32) Priority Date :06/09/2011
(33) Name of priority country :Italy
(86) International Application No :NA
Filing Date :NA
(87) International Publication No : NA
(61) Patent of Addition to Application Number :NA
Filing Date :NA
(62) Divisional to Application Number :NA
Filing Date :NA

(71)**Name of Applicant :**
1)GIANFRANCO NATALI
Address of Applicant :VIA CASTELLETTO 8, 6924 SORENGO, SWITZERLAND
(72)**Name of Inventor :**
1)NATALI, GIANFRANCO

(57) Abstract :
A vehicle body comprises at least one openable side board (4) and at least one hooking unit (1) for locking the openable side board (3), comprising a supporting body (2) and a hooking element (3) rotatably connected to a pin (12) fixed to the supporting body (2) and able to rotate between a locking position and a releasing position. The hooking element (3) comprises a first, operating end (8), and a second end (9) which in use can be hooked to a fixed contact element (10). The hooking element (3) is also able to move, relative to the supporting body (2), orthogonally to the main axis of rotation, between an extended position and a retracted position; there being elastic return means (11) interposed between the supporting body (2) and the hooking element (3) for pushing the hooking element (3) towards the retracted position. The hooking element (3) comprises a housing (13) rotatably and slidably associated with the pin (12), sealed, and in which the elastic return means (11) are positioned.

No. of Pages : 24 No. of Claims : 14

(12) PATENT APPLICATION PUBLICATION
(19) INDIA
(22) Date of filing of Application :04/09/2012
(21) Application No.2734/DEL/2012 A
(43) Publication Date : 21/03/2014

(54) Title of the invention : TAPPET

(51) International classification :F16F
(31) Priority Document No :102011082434.0
(32) Priority Date :09/09/2011
(33) Name of priority country :Germany
(86) International Application No :NA
Filing Date :NA
(87) International Publication No : NA
(61) Patent of Addition to Application Number :NA
Filing Date :NA
(62) Divisional to Application Number :NA
Filing Date :NA

(71)**Name of Applicant :**
1)SCHAEFFLER TECHNOLOGIES AG & CO. KG
Address of Applicant :INDUSTRIESTRAE 1-3 91074 HERZOGENAURACH, GERMANY
(72)**Name of Inventor :**
1)STEFAN DORN
2)NORBERT GEYER
3)MARCO JUNKER

(57) Abstract :
The invention proposes a tappet (1) for a high pressure fuel pump, said tappet comprising a housing (2) which receives, in the region of its drive side front end (3), a roller (4) for abutment of a periodic stroke producing element, said housing (2) being penetrated axially below the roller (4) by a bridge member (6) which is connected to an inner peripheral wall (5) of the housing (2), an underside (8) of the bridge member (6) turned towards a driven side front end (7) of the housing (2) serving, at least indirectly, as a support for a tappet follower, an upper side (9) of the bridge member (6) comprising a dish-type depression (10) in which a movable dish segment (12) separated out of a ring (11) is seated, said roller (4) being slidingly mounted on an inner running surface (13) of the dish segment (12), wherein at least one axial guide column (14) is arranged on the inner peripheral wall (5) of the housing (2), on which guide column (14), the dish segment (12) is arranged, secured against turning out, by means of a respective corner recess (15) provided on a separating front end (16).

No. of Pages : 11 No. of Claims : 9

(12) PATENT APPLICATION PUBLICATION
(19) INDIA
(22) Date of filing of Application :04/09/2012
(21) Application No.2735/DEL/2012 A
(43) Publication Date : 21/03/2014

(54) Title of the invention : MOTOR-DRIVE CONTROLLER AND AIR CONDITIONER

(51) International classification :G05B
(31) Priority Document No :2011-213690
(32) Priority Date :29/09/2011
(33) Name of priority country :Japan
(86) International Application No :NA
Filing Date :NA
(87) International Publication No : NA
(61) Patent of Addition to Application Number :NA
Filing Date :NA
(62) Divisional to Application Number :NA
Filing Date :NA

(71)**Name of Applicant :**
1)HITACHI APPLIANCES, INC.
Address of Applicant :16-1, KAIGAN 1-CHOME, MINATO-KU, TOKYO, JAPAN
(72)**Name of Inventor :**
1)SATOSHI SUMITA
2)TATSUYA TOIZUME
3)YASUO NOTOHARA

(57) Abstract :
In order to achieve position-sensorless drive control of an AC motor having multiple phases with a small current distortion, enable detection of the position of the rotor in the entire speed range including the standstill, and dispense with detection of the neutral potential, in a motor-drive controller for driving the AC motor including an inverter, a current detection unit, a voltage detection unit, a PWM control unit performing PWM control of the inverter by outputting PWM control signals for the respective phases so as to realize 180-degree commutation: a part of the PWM control signals corresponding to one of the phases is stopped for one or more stop periods in each electrical cycle, and the one or more stop periods are variably controlled according to the operating state of the AC motor at the rotational speed equal to or lower than a predetermined speed.

No. of Pages : 43 No. of Claims : 14

(12) PATENT APPLICATION PUBLICATION
(19) INDIA
(22) Date of filing of Application :12/09/2012
(21) Application No.7959/DELNP/2012 A
(43) Publication Date : 21/03/2014

(54) Title of the invention : GUERBET ALCOHOL ALKOXYLATE SURFACTANTS AND THEIR USE IN ENHANCED OIL RECOVERY APPLICATIONS

(51) International classification :C09K8/584,C11D1/29,B01F17/42
(31) Priority Document No :61/325015
(32) Priority Date :16/04/2010
(33) Name of priority country :U.S.A.
(86) International Application No :PCT/US2011/032166
Filing Date :12/04/2011
(87) International Publication No :WO 2011/130310
(61) Patent of Addition to Application Number :NA
Filing Date :NA
(62) Divisional to Application Number :NA
Filing Date :NA

(71)**Name of Applicant :**
1)BOARD OF REGENTS THE UNIVERSITY OF TEXAS SYSTEM
Address of Applicant :201 West 7th Street Austin TX 78701 U.S.A.
2)BASF SE
(72)**Name of Inventor :**
1)WEERASOORIYA Upali P.
2)POPE Gary A.
3)BITTNER Christian
4)OETTER Gunter
5)TINSLEY Jack F.
6)SPINDLER Christian
7)JURGENSON Gabriela Alvarez
8)VOGEL Sophie

(57) Abstract :
Compositions and methods of synthesis of anionic surfactants by alkoxylation of a Guerbet alcohol (GA) having 12 to 36 carbon atoms using butylene oxide and optionally propylene oxide and/or ethylene oxide followed by the incorporation of a terminal anionic group are described herein. The GA of the present invention is made by a facile and inexpensive method that involves high temperature base catalyzed dimerization of alcohols with 6 to 18 carbon atoms. The large hydrophobe ether surfactants of the present invention find uses in enhanced oil recovery (EOR) applications where it is used for solubilization and mobilization of oil and for environmental cleanup. Further the hydrophobe alkoxylated GA without anionic terminal group can be used as an ultra high molecular weight non ionic surfactant.

No. of Pages : 39 No. of Claims : 44

(12) PATENT APPLICATION PUBLICATION
(19) INDIA
(22) Date of filing of Application :12/09/2012
(21) Application No.7963/DELNP/2012 A
(43) Publication Date : 21/03/2014

(54) Title of the invention : PROCESS FOR THE PREPARATION OF 5 SUBSTITUTED 1 ALKYLTETRAZOLES

(51) International classification :C07D257/04
(31) Priority Document No :10156377.3
(32) Priority Date :12/03/2010
(33) Name of priority country :EPO
(86) International Application No :PCT/EP2011/053660
Filing Date :11/03/2011
(87) International Publication No :WO 2011/110651
(61) Patent of Addition to Application Number :NA
Filing Date :NA
(62) Divisional to Application Number :NA
Filing Date :NA

(71)**Name of Applicant :**
1)BAYER INTELLECTUAL PROPERTY GMBH
Address of Applicant :Alfred Nobel Strasse 10 40789 Monheim Germany
(72)**Name of Inventor :**
1)CAILLON MORISSEAU Stphane
2)COQUERON Pierre Yves
3)HEINRICH Jens Dietmar
4)LUI Norbert

(57) Abstract :
The present invention relates to a process for the preparation of 5 substituted 1 alkyltetrazoles.

No. of Pages : 11 No. of Claims : 6

(12) PATENT APPLICATION PUBLICATION
(19) INDIA
(22) Date of filing of Application :12/09/2012
(21) Application No.7964/DELNP/2012 A
(43) Publication Date : 21/03/2014

(54) Title of the invention : PLANT HEALTH COMPOSITIONS COMPRISING A WATER SOLUBLE PESTICIDE AND A WATER INSOLUBLE AGROCHEMICAL

(51) International classification	:A01N25/04,A01N57/20,A01N25/02
(31) Priority Document No	:61/313436
(32) Priority Date	:12/03/2010
(33) Name of priority country	:U.S.A.
(86) International Application No	:PCT/US2011/028375
Filing Date	:14/03/2011
(87) International Publication No	:WO 2011/113052
(61) Patent of Addition to Application Number	:NA
Filing Date	:NA
(62) Divisional to Application Number	:NA
Filing Date	:NA

(71)**Name of Applicant :**
1)MONSANTO TECHNOLOGY LLC
Address of Applicant :800 North Lindbergh Boulevard St. Louis Missouri 63167 U.S.A.
(72)**Name of Inventor :**
1)ZHANG Junhua
2)KOHN Frank C.
3)WRIGHT Daniel R.
4)DYSZLEWSKI Andrew D.
5)ABRAHAM William
6)HEMMINGHAUS John W.

(57) Abstract :
Compositions for improving plant health the compositions comprising at least one water soluble pesticide and at least one non herbicidal water insoluble agrochemical are described. Also described are processes for preparing the compositions and methods of improving agronomic crop plant health using the compositions.

No. of Pages : 143 No. of Claims : 126

(12) PATENT APPLICATION PUBLICATION
(19) INDIA
(22) Date of filing of Application :12/09/2012
(21) Application No.7965/DELNP/2012 A
(43) Publication Date : 21/03/2014

(54) Title of the invention : ELECTRODE FOR A SCANNING ELECTRICAL IMPEDANCE TOMOGRAPHY DEVICE AND A SCANNING ELECTRICAL IMPEDANCE TOMOGRAPHY DEVICE

(51) International classification :A61B5/053,G01N27/04
(31) Priority Document No :364/10
(32) Priority Date :16/03/2010
(33) Name of priority country :Switzerland
(86) International Application No :PCT/CH2011/000051
Filing Date :15/03/2011
(87) International Publication No :WO 2011/113169
(61) Patent of Addition to Application Number :NA
Filing Date :NA
(62) Divisional to Application Number :NA
Filing Date :NA

(71)**Name of Applicant :**
1)SWISSTOM AG
Address of Applicant :Schulstrasse 1 CH 7302 Landquart Switzerland
(72)**Name of Inventor :**
1)BRUNNER Josef X.
2)ROBITAILLE Nicolas
3)GAGGERO Pascal Olivier

(57) Abstract :
An electrode assembly for an EIT scanning device (11) including an electrode (15) a current supply unit (17) a voltage buffer unit (19) a switch logic unit (21) and lines for connecting the different elements whereby the switch logic unit (21) comprises at least one element of a first shift register (27) and at least one element of a second shift register (29). A belt like device comprising a plurality of said electrode assemblies. A method of measuring an EIT image using such electrode assemblies preferably arranged in such a belt like device.

No. of Pages : 47 No. of Claims : 27

(12) PATENT APPLICATION PUBLICATION
(19) INDIA
(22) Date of filing of Application :12/09/2012
(21) Application No.7966/DELNP/2012 A
(43) Publication Date : 21/03/2014

(54) Title of the invention : METHODS AND COMPOSITIONS FOR TREATING DEGOS DISEASE

(51) International classification :A61K39/00,A61P7/00,A61P37/02
(31) Priority Document No :61/309393
(32) Priority Date :01/03/2010
(33) Name of priority country :U.S.A.
(86) International Application No :PCT/US2011/026602
Filing Date :01/03/2011
(87) International Publication No :WO 2011/109338
(61) Patent of Addition to Application Number :NA
Filing Date :NA
(62) Divisional to Application Number :NA
Filing Date :NA

(71)**Name of Applicant :**
1)ALEXION PHARMACEUTICALS INC.
Address of Applicant :352 Knotter Drive Cheshire CT 06410 U.S.A.
(72)**Name of Inventor :**
1)MAGRO Cynthia

(57) Abstract :
The present disclosure relates to compositions containing an inhibitor of human complement and/or an inhibitor of interferon alpha and the use of the compositions in methods for treating or preventing Degos disease in a subject. In some embodiments the inhibitor is an antibody or antigen binding fragment thereof that binds to a human complement component C5 protein or to a biologically active fragment of C5 such as C5a or C5b. In some embodiments the inhibitor is an antibody or an antigen binding fragment thereof that binds to interferon alpha or to an interferon alpha receptor.

No. of Pages : 103 No. of Claims : 52

(12) PATENT APPLICATION PUBLICATION
(19) INDIA
(22) Date of filing of Application :12/09/2012
(21) Application No.7967/DELNP/2012 A
(43) Publication Date : 21/03/2014

(54) Title of the invention : APPARATUS FOR VAPOR PHASE PROCESSING OPHTHALMIC DEVICES

(51) International classification :B29D11/00
(31) Priority Document No :12/722820
(32) Priority Date :12/03/2010
(33) Name of priority country :U.S.A.
(86) International Application No :PCT/US2011/027961
Filing Date :10/03/2011
(87) International Publication No :WO 2011/112847
(61) Patent of Addition to Application Number :NA
Filing Date :NA
(62) Divisional to Application Number :NA
Filing Date :NA

(71)**Name of Applicant :**
1)JOHNSON & JOHNSON VISION CARE INC.
Address of Applicant :7500 Centurion Parkway Jacksonville 32256 U.S.A.
(72)**Name of Inventor :**
1)ENNS John B.
2)WIDMAN Michael F.
3)WOOD Joe M.
4)POWELL P. Mark
5)KINDT LARSEN Ture

(57) Abstract :
This invention discloses apparatus for processing one or more of a Lens Precursor (201) a Lens Precursor Form and an ophthalmic Lens. The apparatus comprises a mandrel (212) and a chamber (203) enclosing a vapor phase environment around the Lens Precursor.

No. of Pages : 30 No. of Claims : 22

(12) PATENT APPLICATION PUBLICATION
(19) INDIA
(22) Date of filing of Application :12/09/2012
(21) Application No.7968/DELNP/2012 A
(43) Publication Date : 21/03/2014

(54) Title of the invention : SUSPENSION DEVICE FOR VEHICLE

(51) International classification :F16B2/06,B60K15/067,F01N13/18
(31) Priority Document No :10503456
(32) Priority Date :08/04/2010
(33) Name of priority country :Sweden
(86) International Application No :PCT/SE2011/050408
Filing Date :06/04/2011
(87) International Publication No :WO 2011/126443
(61) Patent of Addition to Application Number :NA
Filing Date :NA
(62) Divisional to Application Number :NA
Filing Date :NA

(71)**Name of Applicant :**
1)SCANIA CV AB
Address of Applicant :S 151 87 Sdertlje Sweden
(72)**Name of Inventor :**
1)KARLSSON Pr
2)KARLSSON Ulric

(57) Abstract :
The invention relates to a suspension device or bracket (3 19)for releasable fitting of a device to another e.g. fitting a silencer (1) a tank or the like to a vehicle comprising at least two bracket parts (4 5 21a 21b) one of them mounted for example on the truck and one on the unit which is to be connected to the truck and at least two locking elements (6 20a 20b). The invention is achieved by one locking element (6 20a 20b) being adapted to being fitted activated from one side of the bracket (3 19) preferably from above and the other locking element (6 20a 20b) being adapted to being fitted activated from the other side of the bracket (3 19) preferably from below and by the bracket (3 19) being so arranged that only one of the locking elements (6 20a 20b) need be released for it to be possible to take the bracket (3 19) apart and by the bracket (3 19) being so arranged that it is taken apart irrespective of which locking element (6 20a 20b) is released.

No. of Pages : 21 No. of Claims : 5

(12) PATENT APPLICATION PUBLICATION
(19) INDIA
(22) Date of filing of Application :11/09/2012
(21) Application No.7951/DELNP/2012 A
(43) Publication Date : 21/03/2014

(54) Title of the invention : A DEVICE FOR HEATING A LIQUID COMPRISING A SOLVENT AND SOLUTE AND SEPARATING THE SOLVENT AND SOLUTION

(51) International classification :B01D1/18,C02F1/12
(31) Priority Document No :2010900741
(32) Priority Date :23/02/2010
(33) Name of priority country :Australia
(86) International Application No :PCT/AU2011/000192
Filing Date :23/02/2011
(87) International Publication No :WO 2011/103622
(61) Patent of Addition to Application Number :NA
Filing Date :NA
(62) Divisional to Application Number :NA
Filing Date :NA

(71)**Name of Applicant :**
1)AQUAMILL FIVE STAR PTY LTD
Address of Applicant :C/ Masons Accountants Suite 7 412 Toorak Road Toorak Victoria 3142 Australia
(72)**Name of Inventor :**
1)ZMOOD Ronald Barry
2)WITHINGTON Simon John
3)BOTCHER Carl Nicholas

(57) Abstract :
A device for treating a liquid comprising a solvent and a solute and separating the solvent and solute the device comprising a continuous flow treatment chamber including: (a) one or more drying zones (101 102); (b) one or more return zones (103 104) to circulate heating fluid continuously through drying zone(s) (101 102) and return zone(s) (103 104) sequentially; (c) a heating fluid inlet(s) in at least one of the return zones (103 104) for the introduction of the heating fluid; (d) a circulating fan (105) to circulate the heating fluid; (e) a liquid inlet(s) in the drying zone(s) (101 102) including nozzles (108) though which liquid to be treated is introduced in misted form into the zones (101 102); (f) a solute collector(s) (109) located in the drying zone(s) (101 102) downstream of the liquid inlet(s); wherein the introduced liquid is heated by the heating fluid and the solute is separated from the liquid in the solute collector(s) (109).

No. of Pages : 23 No. of Claims : 16

(12) PATENT APPLICATION PUBLICATION
(19) INDIA
(22) Date of filing of Application :12/09/2012
(21) Application No.7955/DELNP/2012 A
(43) Publication Date : 21/03/2014

(54) Title of the invention : NUT CARRIER FOR BODY PIERCING INSTRUMENT

(51) International classification :A44C7/00
(31) Priority Document No :12/730705
(32) Priority Date :24/03/2010
(33) Name of priority country :U.S.A.
(86) International Application No :PCT/US2011/029015
Filing Date :18/03/2011
(87) International Publication No :WO 2011/119432
(61) Patent of Addition to Application Number :NA
Filing Date :NA
(62) Divisional to Application Number :NA
Filing Date :NA

(71)**Name of Applicant :**
1)REIL Vladimir
Address of Applicant :521 W. Rosecrans Boulevard Gardena CA 90248 U.S.A.
(72)**Name of Inventor :**
1)REIL Vladimir

(57) Abstract :
Apparatuses and systems for ornamental piercing of body parts are disclosed. Various embodiments of the invention employ a nut carrier (120) which includes a vertical engagement feature (146) and molded spring fingers (148a 148b) to couple to a body piercing instrument (100). The vertical engagement feature prevents rotation of the nut carrier relative to the body piercing instrument and the molded spring fingers provide a secure engagement over a rounded flange (132) of the body piercing instrument. The nut carrier is implemented as a component in a body piercing system that employs separate carriers for the nut (124) and the post (128). The novel nut carrier simplifies manufacturing eliminating a welded two part flange previously employed in the body piercing instrument.

No. of Pages : 30 No. of Claims : 20

(12) PATENT APPLICATION PUBLICATION
(19) INDIA
(22) Date of filing of Application :12/09/2012
(21) Application No.7956/DELNP/2012 A
(43) Publication Date : 21/03/2014

(54) Title of the invention : ANTIMICROBIAL COMPOSITIONS

(51) International classification :A61K31/4172,A61K31/4164,A61K31/221
(31) Priority Document No :61/316575
(32) Priority Date :23/03/2010
(33) Name of priority country :U.S.A.
(86) International Application No :PCT/US2011/029293
Filing Date :22/03/2011
(87) International Publication No :WO 2011/119517
(61) Patent of Addition to Application Number :NA
Filing Date :NA
(62) Divisional to Application Number :NA
Filing Date :NA

(71)**Name of Applicant :**
1)GOJO INDUSTRIES INC.
Address of Applicant :One GOJO Plaza Suite 500 Akron OH 44311 U.S.A.
(72)**Name of Inventor :**
1)EDMONDS Sarah
2)BINGHAM James
3)COHEN Mitchell
4)BURK Helen

(57) Abstract :
Environmentally beneficial antimicrobial compositions are described that include a cationic surfactant and certain antimicrobial agents or preservatives. Useful cationic surfactants include lauric arginate (LAE). Advantageously the pH of the composition may be adjusted to reduce irritancy.

No. of Pages : 33 No. of Claims : 32

(12) PATENT APPLICATION PUBLICATION
(19) INDIA
(22) Date of filing of Application :12/09/2012
(21) Application No.7957/DELNP/2012 A
(43) Publication Date : 21/03/2014

(54) Title of the invention : METHOD OF DIRECTING AN OPTICAL RECEIVER TOWARD A LIGHT SOURCE AND AN APPARATUS OF PRACTISING THE METHOD

(51) International classification :H04B10/10,H04B10/02
(31) Priority Document No :20100377
(32) Priority Date :16/03/2010
(33) Name of priority country :Norway
(86) International Application No :PCT/NO2011/000082
Filing Date :14/03/2011
(87) International Publication No :WO 2011/115499
(61) Patent of Addition to Application Number :NA
Filing Date :NA
(62) Divisional to Application Number :NA
Filing Date :NA

(71)**Name of Applicant :**
1)POLEWALL AS
Address of Applicant :Gimlemoen 19 N 4630 Kristiansand Norway
(72)**Name of Inventor :**
1)EIDE Jan

(57) Abstract :
A method and an apparatus for directing an optical receiver (1) toward a light source using a plurality of light detectors (9) arranged around the receiver s (1) optical axis (10) to check where light (L) hits the light detectors (9) relative to the optical axis (10) the method including the steps of: A) arranging the receiver (1) defocused to embrace a largest possible field of view of the area wherein the light source may be located and refracting the light with largest possible spread angle; B) letting the receiver (1) search for the light source until the light (L) hits at least one of the light detectors (9); C) calculating where the light hits relative to the optical axis and adjusting the receiver directing the light toward the optical axis; D) reducing the field of view embraced by the receiver; and E) repeating the steps C and D until the light is concentrated in a smallest possible area.

No. of Pages : 34 No. of Claims : 12

(12) PATENT APPLICATION PUBLICATION
(19) INDIA
(22) Date of filing of Application :03/09/2012
(21) Application No.7643/DELNP/2012 A
(43) Publication Date : 21/03/2014

(54) Title of the invention : PROCESSES FOR THE PREPARATION OF LINEZOLID

(51) International classification :C07D263/20
(31) Priority Document No :595/DEL/2010
(32) Priority Date :15/03/2010
(33) Name of priority country :India
(86) International Application No :PCT/IB2011/000527
Filing Date :14/03/2011
(87) International Publication No :WO 2011/114210
(61) Patent of Addition to Application Number :NA
Filing Date :NA
(62) Divisional to Application Number :NA
Filing Date :NA

(71)**Name of Applicant :**
1)JUBILANT LIFE SCIENCES LIMITED
Address of Applicant :Plot 1A Sector 16A 201301 Noida Uttar Pradesh India
(72)**Name of Inventor :**
1)GUPTA Ashish Kumar
2)SINGH Shishupal
3)PANDA Atulya Kumar
4)BISWAS Sujay
5)VIR Dharam

(57) Abstract :
Disclosed herein a process for preparing linezolid, wherein the resultant linezolide is devoid of impurities and in- volve easy and economical process. The present invention further relates to preparation of linezolid by employing an azide inter - mediate and process for said intermediate.

No. of Pages : 39 No. of Claims : 38

(12) PATENT APPLICATION PUBLICATION
(19) INDIA
(22) Date of filing of Application :03/09/2012
(21) Application No.7644/DELNP/2012 A
(43) Publication Date : 21/03/2014

(54) Title of the invention : DYNAMIC INSULATION

(51) International classification :E04B1/76,E04B1/80,E04C2/52
(31) Priority Document No :1003383.5
(32) Priority Date :01/03/2010
(33) Name of priority country :U.K.
(86) International Application No :PCT/GB2011/000276
Filing Date :01/03/2011
(87) International Publication No :WO 2011/107731
(61) Patent of Addition to Application Number :NA
Filing Date :NA
(62) Divisional to Application Number :NA
Filing Date :NA

(71)**Name of Applicant :**
1)ENERGYFLO CONSTRUCTION TECHNOLOGIES LIMITED
Address of Applicant :49 Queen Street Edinburgh EH2 3NH U.K.
(72)**Name of Inventor :**
1)BROWN Alexander
2)PEACOCK Andrew

(57) Abstract :
Dynamic Insulation for a building or structure comprising an external surface and an internal surface; at least one heat transfer layer between the internal and external surface; a supply for supplying air to the heat transfer layer and a collector for collecting air that has flowed through the heat transfer layer. Pressure is regulated through the dynamic insulation. Air is supplied to the dynamic insulation from the interior or the exterior of the building or structure and/or exhausted to the Interior or exterior of the building or structure.

No. of Pages : 37 No. of Claims : 32

(12) PATENT APPLICATION PUBLICATION
(19) INDIA
(22) Date of filing of Application :05/09/2012
(21) Application No.7755/DELNP/2012 A
(43) Publication Date : 21/03/2014

(54) Title of the invention : INHIBITORS OF SEMICARABAZIDE SENSITIVE AMINE OXIDASE

(51) International classification :C07D471/04,C07D487/04,C07D498/08
(31) Priority Document No :1004311.5
(32) Priority Date :15/03/2010
(33) Name of priority country :U.K.
(86) International Application No :PCT/EP2011/053818
Filing Date :14/03/2011
(87) International Publication No :WO 2011/113798
(61) Patent of Addition to Application Number :NA
Filing Date :NA
(62) Divisional to Application Number :NA
Filing Date :NA

(71)**Name of Applicant :**
1)Proximagen Limited
Address of Applicant :3rd Floor 91 93 Farringdon Road London EC1M 3LN U.K.
(72)**Name of Inventor :**
1)EVANS David
2)CARLEY Allison
3)STEWART Alison
4)HIGGINBOTTOM Michael
5)SAVORY Edward
6)SIMPSON Iain
7)NILSSON Marianne
8)HARALDSSON Martin
9)NORDLING Erik
10)KOOLMEISTER Tobias

(57) Abstract :
Compounds of formula (I) are inhibitors of Semicarbazide sensitive amine oxidase wherein R A X and R are as defined in the claims.

No. of Pages : 118 No. of Claims : 43

(12) PATENT APPLICATION PUBLICATION
(19) INDIA
(22) Date of filing of Application :07/09/2012
(21) Application No.7861/DELNP/2012 A
(43) Publication Date : 21/03/2014

(54) Title of the invention : ANTIBODIES WITH PH DEPENDENT ANTIGEN BINDING

(51) International classification :C07K16/40
(31) Priority Document No :61/313102
(32) Priority Date :11/03/2010
(33) Name of priority country :U.S.A.
(86) International Application No :PCT/IB2011/050989
Filing Date :09/03/2011
(87) International Publication No :WO 2011/111007
(61) Patent of Addition to Application Number :NA
Filing Date :NA
(62) Divisional to Application Number :NA
Filing Date :NA

(71)**Name of Applicant :**
1)RINAT NEUROSCIENCE CORPORATION
Address of Applicant :230 East Grand Avenue South San Francisco California 94080 U.S.A.
2)PFIZER INC.
(72)**Name of Inventor :**
1)PONS Jaume
2)CHABOT Jeffrey Raymond
3)CHAPARRO RIGGERS Javier Fernando
4)GOMES Bruce Charles
5)LIANG Hong
6)MAYAWALA Kapil
7)METTETAL II Jerome Thomas
8)RAJPAL Arvind
9)SHELTON David Louis

(57) Abstract :
The present invention relates to antibodies with pH dependent binding to its antigen such that the affinity for antigen binding at physiological pH (i.e., pH 7.4) is greater than at endosomal pH (i.e., pH 6.0 or 5.5). In other words, the KD or koff ratio at pH 5.5/ pH 7.4 or at pH 6.0/ pH 7.4 is more than, or ranges between, 2, 3, 4, 8, 10, 16, 20, 30, 40, or 100 or more. Such pH dependent antibodies preferentially dissociate from the antigen in the endosome. This can increase antibody half life, as compared to antibodies with equivalent K s at pH 7.4 but with no pH dependent binding, when the antigen is one that undergoes antigen-mediated clearance (e.g., PCSK9). Antibodies with pH dependent binding can decrease total antigen half life when the antigen undergoes reduced clearance when bound to antibody (e.g., IL6). Antibodies with pH dependent binding can also prolong the decrease in antigen which is not antibody-bound. This can be important when antagonizing a target antigen typically present at high levels (e.g., IgE, DKK1, C5 and SOST). In addition, such antibodies can increase antigen half life when the antigen is a receptor and the receptor has increased clearance when bound to antibody (e.g, GMCSF receptor).

No. of Pages : 112 No. of Claims : 31

(12) PATENT APPLICATION PUBLICATION
(19) INDIA
(22) Date of filing of Application :12/09/2012
(21) Application No.7973/DELNP/2012 A
(43) Publication Date : 21/03/2014

(54) Title of the invention : FERRITE STAINLESS STEEL SHEET HAVING HIGH THERMAL RESISTANCE AND PROCESSABILITY AND METHOD FOR MANUFACTURING THE SAME

(51) International classification :C22C38/00,C21D9/46,C22C38/38
(31) Priority Document No :2010072889
(32) Priority Date :26/03/2010
(33) Name of priority country :Japan
(86) International Application No :PCT/JP2011/058373
Filing Date :25/03/2011
(87) International Publication No :WO 2011/118854
(61) Patent of Addition to Application Number :NA
Filing Date :NA
(62) Divisional to Application Number :NA
Filing Date :NA

(71)**Name of Applicant :**
1)Nippon Steel & Sumikin Stainless Steel Corporation
Address of Applicant :6 1 Otemachi 2 chome Chiyoda ku Tokyo 1000004 Japan
(72)**Name of Inventor :**
1)HAMADA Junichi
2)TERAOKA Shinichi
3)INOUE Yoshiharu
4)KANNO Norihiro

(57) Abstract :
Provided is a low cost ferrite stainless steel sheet for an exhaust part which exhibits little deterioration in strength even after exposure to a long thermal history wherein the ferrite stainless steel sheet comprises: less than 0.010 mass% of C; 0.020 mass% or less of N; more than 0.1 mass% and 2.0 mass% or less of Si; 2.0 mass% or less of Mn; 12.0 to 25.0 mass% of Cr; more than 0.9 mass% and 2 mass% or less of Cu; 0.05 to 0.3 mass% of Ti; 0.001 to 0.1 mass% of Nb; 1.0 mass% or less of Al; and 0.0003 to 0.003 mass% of B wherein Cu/(Ti+Nb) is 5 or more and the balance is Fe and unavoidable impurities.

No. of Pages : 25 No. of Claims : 3

(12) PATENT APPLICATION PUBLICATION
(19) INDIA
(22) Date of filing of Application :05/09/2012
(21) Application No.2754/DEL/2012 A
(43) Publication Date : 21/03/2014

(54) Title of the invention : POSITION SENSOR

(51) International classification :G01B
(31) Priority Document No :2011-198562
(32) Priority Date :12/09/2011
(33) Name of priority country :Japan
(86) International Application No :NA
Filing Date :NA
(87) International Publication No : NA
(61) Patent of Addition to Application Number :NA
Filing Date :NA
(62) Divisional to Application Number :NA
Filing Date :NA

(71)**Name of Applicant :**
1)KABUSHIKI KAISHA TOKAI RIKA DENKI SEISAKUSHO
Address of Applicant :260, TOYOTA 3-CHOME, OHGUCHI-CHO, NIWA-GUN, AICHI 480-0195, Japan
(72)**Name of Inventor :**
1)IWATA, MASAYOSHI

(57) Abstract :
A position sensor (1) for a transmission mode selector lever (50) includes a magnet (10) and three magnetic flux detection elements (21, 22, 23) that detect magnetic flux of the magnet. A determination circuit (30) determines an operation position of the transmission mode selector lever based on output levels of detection signals generated by the magnetic flux detection elements. The magnet includes first and second magnetized regions (10A, 10B) . The first and second magnetized regions are formed so that when the magnet is moved relative to the magnetic flux detection elements along a straight line, output levels of the detection signals generated by the magnetic flux detection elements change in accordance with a proportional relationship having a first or second gradient relative to the distance of the movement. The three detection elements are spaced apart from each other on a straight line that is parallel to the first and second straight lines.

No. of Pages : 40 No. of Claims : 7

(12) PATENT APPLICATION PUBLICATION
(19) INDIA
(22) Date of filing of Application :05/09/2012
(21) Application No.2756/DEL/2012 A
(43) Publication Date : 21/03/2014

(54) Title of the invention : TEXTILE MACHINERY

(51) International classification :D01H1/00
(31) Priority Document No :2011-206364
(32) Priority Date :21/09/2011
(33) Name of priority country :Japan
(86) International Application No :NA
Filing Date :NA
(87) International Publication No : NA
(61) Patent of Addition to Application Number :NA
Filing Date :NA
(62) Divisional to Application Number :NA
Filing Date :NA

(71)**Name of Applicant :**
1)MURATA MACHINERY, LTD.
Address of Applicant :3, MINAMI OCHIAI-CHO, KISSHOIN, MINAMI-KU, KYOTO-SHI, KYOTO 601-8326 JAPAN
(72)**Name of Inventor :**
1)HIROYUKI SUSAMI

(57) Abstract :
If a yarn joining operation is required to be executed with respect to a spinning unit (2) facing an overlapping region (T), that is, a spinning unit (2) that can receive the yarn joining operation from a first yarn joining cart (31) and a second yarn joining cart (32), a yarn joining cart (3) to execute the yarn joining operation is selected in accordance with an occurrence status of a yarn joining request made from the spinning unit (2) facing exclusive regions (SI) and (S2) of each yarn joining cart (3) . The yarn joining cart (3) is selected according to processing ability with respect to the yarn joining request, and the yarn joining operation can be executed with respect to the spinning unit (2) facing the overlapping region (T) by the selected yarn joining cart (3).

No. of Pages : 40 No. of Claims : 12

(12) PATENT APPLICATION PUBLICATION
(19) INDIA
(22) Date of filing of Application :05/09/2012
(21) Application No.7760/DELNP/2012 A
(43) Publication Date : 21/03/2014

(54) Title of the invention : METHOD FOR PREPARING CARBOXYLIC ACIDS BY OXIDATIVE CLEAVAGE OF A VICINAL DIOL

(51) International classification :C07C51/29,C07C51/31,C07C67/313
(31) Priority Document No :1051627
(32) Priority Date :05/03/2010
(33) Name of priority country :France
(86) International Application No :PCT/FR2011/050456
Filing Date :04/03/2011
(87) International Publication No :WO 2011/107721
(61) Patent of Addition to Application Number :NA
Filing Date :NA
(62) Divisional to Application Number :NA
Filing Date :NA

(71)**Name of Applicant :**
1)ORGANISATION NATIONALE INTERPROFESSIONNELLE DES GRAINES ET FRUITS OLEAGINEUX ONIDOL
Address of Applicant :11 13 rue de Monceau F 75008 Paris France
2)CENTRE NATIONAL DE LA RECHERCHE SCIENTIFIQUE
3)UNIVERSITE CLAUDE BERNARD LYON I
(72)**Name of Inventor :**
1)LEMAIRE Marc
2)FAVRE REGUILLON Alain
3)PAQUIT Bndicte
4)CLAUDE Sylvain
5)RAOUL Yann

(57) Abstract :
The present invention relates to a method for preparing carboxylic acids, in particular mono- and dicarboxylic acids, by oxidative cleavage of a vicinal diol. According to the invention, said method consists of reacting a vicinal diol of formula I: where p is an integer comprised between 1 and 6; R1 and R2 are, separately: an alkyl or hydroxyl group having 1 to 12 carbon atoms; a -(CH2)n-C02M group where n, which can be identical or different in R1 and R2, is an integer comprised between 1 and 11 and M is a hydrogen atom or an alkyl group having 1 to 4 carbon atoms or an alkaline cation; or R1 and R2 jointly form an alkylene -(CH2)m- group where m is an integer comprised between 2 and 10, preferably between 2 and 6; with industrial-grade sodium hypochlorite (or bleach), in the absence of an organic solvent and without adding a catalyst, preferably at room temperature. The invention can be used for recycling natural vegetable oils.

No. of Pages : 16 No. of Claims : 10

(12) PATENT APPLICATION PUBLICATION
(19) INDIA
(22) Date of filing of Application :12/09/2012
(21) Application No.7984/DELNP/2012 A
(43) Publication Date : 21/03/2014

(54) Title of the invention : TRANSPORT VEHICLE FOR ROTOR BLADES AND/OR TOWER SEGMENTS OF WIND POWER PLANTS AND TRANSPORT RACK FOR A TRANSPORT VEHICLE

(51) International classification :B60P3/40,F03D1/00
(31) Priority Document No :10 2010 003 694.3
(32) Priority Date :07/04/2010
(33) Name of priority country :Germany
(86) International Application No :PCT/EP2011/055282
Filing Date :05/04/2011
(87) International Publication No :WO 2011/124574
(61) Patent of Addition to Application Number :NA
Filing Date :NA
(62) Divisional to Application Number :NA
Filing Date :NA

(71)**Name of Applicant :**
1)WOBBEN PROPERTIES GMBH
Address of Applicant :Dreekamp 5 26605 Aurich Germany
(72)**Name of Inventor :**
1)RESSEL Dirk
2)LLKER Frank
3)JANKE Mirko

(57) Abstract :
The invention relates to a transport vehicle for transporting rotor blades and/or tower segments of wind power plants. The transport vehicle comprises a transport rack (600) having a main frame (610) a receiving frame (620) rigidly connected to the main frame (610) at a first angle and a rotational adjusting unit (630) which is fastened at one end to the receiving frame (620) and at the second end comprises a blade adapter (650) for receiving a rotor blade or a tower segment. The base frame spans a main plane. The rotational adjusting unit (630) comprises at least one first pivot bearing (634) with a second angle being provided between the second rotational plane of the second pivot bearing (634).

No. of Pages : 41 No. of Claims : 6

(12) PATENT APPLICATION PUBLICATION
(19) INDIA
(22) Date of filing of Application :06/09/2012
(21) Application No.2764/DEL/2012 A
(43) Publication Date : 21/03/2014

(54) Title of the invention : METHOD FOR DETERMINING A VOLTAGE BOUNDING RANGE

(51) International classification :H02J
(31) Priority Document No :EP 11195355
(32) Priority Date :22/12/2011
(33) Name of priority country :EPO
(86) International Application No :NA
Filing Date :NA
(87) International Publication No : NA
(61) Patent of Addition to Application Number :NA
Filing Date :NA
(62) Divisional to Application Number :NA
Filing Date :NA

(71)**Name of Applicant :**
1)SIEMENS AKTIENGESELLSCHAFT
Address of Applicant :WITTELSBACHERPLATZ 2 80333, MUNICH, GERMANY
(72)**Name of Inventor :**
1)BECH JOHN
2)BO YIN

(57) Abstract :
It is described a method for determining a voltage bounding range (125) defining a range of a wind turbine reference voltage (123) for a wind turbine (101) for controlling an output voltage (Vturb) of the wind turbine at a wind turbine output terminal (113), the method comprising: obtaining information regarding an electrical characteristic of a transmission line (106) connecting the wind turbine output terminal (113) to a point of common coupling (111) to which plural other wind turbines are connectable; and defining the voltage bounding range (125) based on the electrical characteristic of the transmission line (106).

No. of Pages : 27 No. of Claims : 14

(12) PATENT APPLICATION PUBLICATION
(19) INDIA
(22) Date of filing of Application :05/09/2012
(21) Application No.7734/DELNP/2012 A
(43) Publication Date : 21/03/2014

(54) Title of the invention : NOVEL DIARYL SULFONE COMPOUND AND MANUFACTURING METHOD FOR SAME

(51) International classification :C07C327/10
(31) Priority Document No :2010062865
(32) Priority Date :18/03/2010
(33) Name of priority country :Japan
(86) International Application No :PCT/JP2011/055452
Filing Date :09/03/2011
(87) International Publication No :WO 2011/114954
(61) Patent of Addition to Application Number :NA
Filing Date :NA
(62) Divisional to Application Number :NA
Filing Date :NA

(71)**Name of Applicant :**
1)SUMITOMO SEIKA CHEMICALS CO. LTD.
Address of Applicant :346 1 Miyanishi Harima cho Kako gun Hyogo 6750145 Japan
(72)**Name of Inventor :**
1)KUAD Paul
2)KANDA Hisaaki
3)FUJIWARA Takeshi
4)SHIRAISHI Hiroyuki

(57) Abstract :
Disclosed are a diaryl sulfone compound represented by general formula (1), and a manufacturing method for the same. The present invention enables the high yield manufacturing of a novel compound using a simple manufacturing process which uses inexpensive materials as raw materials, said novel compound being useful as a monomer for the manufacturing of synthetic resins having a high refractive index and good transparency. (In the formula, R1 - R4 and R1 - R4 can be the same or different, and each represent a hydrogen atom, a C1-4 alkyl group or a halogen atom, and R5 is a (thio) glycidyl group, an acryloyl group or the like.)

No. of Pages : 44 No. of Claims : 8

(12) PATENT APPLICATION PUBLICATION
(19) INDIA
(22) Date of filing of Application :05/09/2012
(21) Application No.7735/DELNP/2012 A
(43) Publication Date : 21/03/2014

(54) Title of the invention : NOVEL DIARYL SULFONE COMPOUND AND MANUFACTURING METHOD FOR SAME

(51) International classification :C07C323/65,C07C319/20
(31) Priority Document No :2010062880
(32) Priority Date :18/03/2010
(33) Name of priority country :Japan
(86) International Application No :PCT/JP2011/055453
Filing Date :09/03/2011
(87) International Publication No :WO 2011/114955
(61) Patent of Addition to Application Number :NA
Filing Date :NA
(62) Divisional to Application Number :NA
Filing Date :NA

(71)**Name of Applicant :**
1)SUMITOMO SEIKA CHEMICALS CO. LTD.
Address of Applicant :346 1 Miyanishi Harima cho Kako gun Hyogo 6750145 Japan
(72)**Name of Inventor :**
1)KUAD Paul
2)KANDA Hisaaki
3)FUJIWARA Takeshi
4)SHIRAISHI Hiroyuki

(57) Abstract :
Disclosed are: a diaryl sulfone compound represented by general formula (1); a manufacturing method for a diaryl sulfone compound represented by general formula (1) in which a 4,4-dihalo aryl sulfone compound is reacted with a thiol salt compound having an alkylene group; and a manufacturing method for a diaryl sulfone compound represented by general formula (1) in which a halogenating agent is reacted with the product of a reaction between a 4,4-dihalo aryl sulfone compound and a thiol salt compound having a hydroxyl group, after which a dehydrohalogenation reaction is carried out. (In the formula, R1 - R4 and R1 - R4 can be the same or different, and each represent a hydrogen atom, a C1-4 alkyl group or a halogen atom, and R5 represents a C2-6 aleknyl group, a C1-4 alkyl group, or an aromatic heterocyclic group.

No. of Pages : 33 No. of Claims : 11

(12) PATENT APPLICATION PUBLICATION
(19) INDIA
(22) Date of filing of Application :12/09/2012
(21) Application No.7979/DELNP/2012 A
(43) Publication Date : 21/03/2014

(54) Title of the invention : LUBRICATION OF SCREW MACHINES

(51) International classification :F04C18/16,F16C33/66,F16N15/04
(31) Priority Document No :1002411.5
(32) Priority Date :12/02/2010
(33) Name of priority country :U.K.
(86) International Application No :PCT/GB2011/050275
Filing Date :14/02/2011
(87) International Publication No :WO 2011/098835
(61) Patent of Addition to Application Number :NA
Filing Date :NA
(62) Divisional to Application Number :NA
Filing Date :NA

(71)**Name of Applicant :**
1)THE CITY UNIVERSITY
Address of Applicant :Northampton Square London EC1V 0HB U.K.
(72)**Name of Inventor :**
1)SMITH Ian Kenneth
2)STOSIC Nikola Rudi

(57) Abstract :
A screw machine for use with a working fluid with a liquid phase present comprises rotors having meshed lubricated helical formations. The rotors have an N profile as disclosed in WO 97/43550. In use lubrication of the helical formations of the rotors and optionally of the rotor bearings is achieved substantially exclusively with the liquid phase of the working fluid.

No. of Pages : 27 No. of Claims : 18

(12) PATENT APPLICATION PUBLICATION
(19) INDIA
(22) Date of filing of Application :12/09/2012
(21) Application No.7980/DELNP/2012 A
(43) Publication Date : 21/03/2014

(54) Title of the invention : MULTI LAYER MATERIAL AND RELATIVE METHOD OF PRODUCTION

(51) International classification :B32B15/10,B32B15/20
(31) Priority Document No :UD2010A000032
(32) Priority Date :22/02/2010
(33) Name of priority country :Italy
(86) International Application No :PCT/IB2011/000342
Filing Date :21/02/2011
(87) International Publication No :WO 2011/101735
(61) Patent of Addition to Application Number :NA
Filing Date :NA
(62) Divisional to Application Number :NA
Filing Date :NA

(71)**Name of Applicant :**
1)MATTELLONE SRL
Address of Applicant :Strada Triestina 14 I 33050 Trivignano Udinese Italy
(72)**Name of Inventor :**
1)MATTELLONE Doriano

(57) Abstract :
Multi layer material comprising a plurality of wood based sheets (14) comprising at least a layer (11 12) of metal material interposed between two wood based sheets (14).

No. of Pages : 18 No. of Claims : 15

(12) PATENT APPLICATION PUBLICATION
(19) INDIA
(22) Date of filing of Application :12/09/2012
(21) Application No.7981/DELNP/2012 A
(43) Publication Date : 21/03/2014

(54) Title of the invention : APPARATUS SYSTEMS AND METHODS FOR COLLECTING AND RECLAIMING ANAESTHETIC AGENTS AND FOR REMOVING NITROUS OXIDE FROM EXHAUST GASES

(51) International classification	:B01D53/38,A61M16/01,B01D53/02
(31) Priority Document No	:61/306915
(32) Priority Date	:22/02/2010
(33) Name of priority country	:U.S.A.
(86) International Application No	:PCT/CA2011/000181
Filing Date	:17/02/2011
(87) International Publication No	:WO 2011/100826
(61) Patent of Addition to Application Number	:NA
Filing Date	:NA
(62) Divisional to Application Number	:NA
Filing Date	:NA

(71)**Name of Applicant :**
1)CLASS 1 INC.
Address of Applicant :565 Boxwood Drive Cambridge Ontario N3E 1A5 Canada
(72)**Name of Inventor :**
1)HUNT Barry W.
2)JARRETT Todd Eric
3)THORNE Damian Ross
4)AHCHONG Katrina Marie
5)CARR Dean Paul
6)VASQUEZ Cesar Laurentino Martinez

(57) Abstract :
A system for collecting an anaesthetic agent having at least one anaesthetic gas scavenging system (AGSS) for receiving exhaust gas from a plurality of sources the exhaust gas including the anaesthetic agent to be collected each AGSS comprising at least one power source for providing suction of the exhaust gas from the plurality of sources under negative pressure and a central collection system for receiving the exhaust gas the central collection system comprising at least one collector for collecting the anaesthetic agent from the exhaust gas wherein the at least one collector is configured to adsorb the anaesthetic agent from the exhaust gas. The central collection system may be configured to received the exhaust gases from the at least one AGSS with the central collection system being located downstream of the at least one AGSS.

No. of Pages : 74 No. of Claims : 70

(12) PATENT APPLICATION PUBLICATION
(19) INDIA
(22) Date of filing of Application :12/09/2012
(21) Application No.7985/DELNP/2012 A
(43) Publication Date : 21/03/2014

(54) Title of the invention : POLYAMIDE RESIN COMPOSITION

(51) International classification :C08L77/00,C08K3/40
(31) Priority Document No :2010051180
(32) Priority Date :08/03/2010
(33) Name of priority country :Japan
(86) International Application No :PCT/JP2011/055409
Filing Date :08/03/2011
(87) International Publication No :WO 2011/111713
(61) Patent of Addition to Application Number :NA
Filing Date :NA
(62) Divisional to Application Number :NA
Filing Date :NA

(71)**Name of Applicant :**
1)UBE INDUSTRIES LTD.
Address of Applicant :1978 96 Oaza Kogushi Ube shi Yamaguchi 7558633 Japan
(72)**Name of Inventor :**
1)MIYAMOTO Akio
2)FUKUI Yasuharu

(57) Abstract :
Disclosed is a polyamide resin composition which has excellent acid resistance and a light weight and can be used suitably for parts through which an exhaust gas passes in EGR. Specifically disclosed is a polyamide resin composition containing a polyamide resin (A) and a glass (C) and optionally containing a styrene polymer (B1) and a modified PPE (B2) wherein the sum total of the contents of the components (A) (B1) and (B2) is 40 to 95 wt% and the content of the component (C) is 60 to 5 wt% in the composition the content of the component (A) is 50 to 100 wt% and the sum total of the contents of the components (B1) and (B2) is 50 to 0 wt% relative to the sum total (i.e. 100 wt%) of the contents of the components (A) (B1) and (B2) the content of component (C1) is 60 to 5 wt% in the composition when the component (C) comprises a glass (C1) that does not contain boron oxide the component (A) is a polyoxamide resin or the content of the component (A) is 50 to 90 wt% and the sum total of the contents of the components (B1) and (B2) is 50 to 10 wt% relative to the sum total (i.e. 100 wt%) of the contents of the components (A) (B1) and (B2) when the component (C) does not comprise the component (C1) and the component (B1) has a deflection temperature under load of 140 to 280°C.

No. of Pages : 31 No. of Claims : 13

(12) PATENT APPLICATION PUBLICATION
(19) INDIA
(22) Date of filing of Application :12/09/2012
(21) Application No.7986/DELNP/2012 A
(43) Publication Date : 21/03/2014

(54) Title of the invention : TRAIN CONTROL SYSTEM

(51) International classification :B60L15/40,G01M17/08
(31) Priority Document No :2010251129
(32) Priority Date :09/11/2010
(33) Name of priority country :Japan
(86) International Application No :PCT/JP2011/006155
Filing Date :02/11/2011
(87) International Publication No :WO 2012/063439
(61) Patent of Addition to Application Number :NA
Filing Date :NA
(62) Divisional to Application Number :NA
Filing Date :NA

(71)**Name of Applicant :**
1)KABUSHIKI KAISHA TOSHIBA
Address of Applicant :1 1 Shibaura 1 chome Minato ku Tokyo 1058001 Japan
(72)**Name of Inventor :**
1)YAMAMOTO Junko
2)IBA Satoshi
3)MIYAJIMA Yasuyuki

(57) Abstract :
A train control system for a train the control system includes a speed detection unit a position detecting unit a signal aspect speed receiver an automatic train operation (ATO) unit that is configured to output a first throttle notch command a specification notch pattern output unit configured to selectively output a second throttle notch control command when the train is in a specified location range. The first output throttle notch command is based on the signal aspect speed information. The second output control command is based on a predetermined notch pattern. The train control system includes an output change unit configured to receive the first throttle notch command and the second throttle notch command select one of the two commands and output the selected one of the first throttle notch command and the second throttle notch command to a drive and braking control device.

No. of Pages : 37 No. of Claims : 20

(12) PATENT APPLICATION PUBLICATION
(19) INDIA
(22) Date of filing of Application :12/09/2012
(21) Application No.7987/DELNP/2012 A
(43) Publication Date : 21/03/2014

(54) Title of the invention : TRIAZOLE COMPOUNDS AS KSP INHIBITORS

(51) International classification :C07D249/08,C07D403/12,C07D405/12
(31) Priority Document No :61/324651
(32) Priority Date :15/04/2010
(33) Name of priority country :U.S.A.
(86) International Application No :PCT/EP2011/055840
Filing Date :13/04/2011
(87) International Publication No :WO 2011/128381
(61) Patent of Addition to Application Number :NA
Filing Date :NA
(62) Divisional to Application Number :NA
Filing Date :NA

(71)**Name of Applicant :**
1)NOVARTIS AG
Address of Applicant :Lichtstrasse 35 CH 4056 Basel Switzerland
(72)**Name of Inventor :**
1)ABRAMS Tinya
2)BARSANTI Paul A.
3)DING Yu
4)DUHL David
5)HAN Wooseok
6)HU Cheng
7)PAN Yue

(57) Abstract :
The present invention provides triazole compounds of Formula (I) : as further described herein. The invention also provides a pharmaceutical composition comprising a therapeutically effective amount of a compound of Formula (I) and a method of treating a disorder mediated at least in part by KSP in a mammalian patient comprising administering to a mammalian patient in need of such treatment a therapeutically effective amount of a compound of Formula (I).

No. of Pages : 99 No. of Claims : 37

(12) PATENT APPLICATION PUBLICATION
(19) INDIA
(22) Date of filing of Application :12/09/2012
(21) Application No.7988/DELNP/2012 A
(43) Publication Date : 21/03/2014

(54) Title of the invention : METHOD FOR PROLIFERATING CARDIOMYOCYTES USING MICRO RNA

(51) International classification :A61K48/00,A61K31/7105,A61K31/7115
(31) Priority Document No :2010056558
(32) Priority Date :12/03/2010
(33) Name of priority country :Japan
(86) International Application No :PCT/JP2011/055789
Filing Date :11/03/2011
(87) International Publication No :WO 2011/111824
(61) Patent of Addition to Application Number :NA
Filing Date :NA
(62) Divisional to Application Number :NA
Filing Date :NA

(71)**Name of Applicant :**
1)DAIICHI SANKYO COMPANY LIMITED
Address of Applicant :5 1 Nihonbashi Honcho 3 chome Chuo ku Tokyo 1038426 Japan
(72)**Name of Inventor :**
1)KAWASHIMA Kayoko
2)KOSHIMIZU Uichi

(57) Abstract :
Disclosed are: a method for proliferating cardiomyocytes wherein a miRNA that promotes the proliferation of cardiomyocytes is used; a vector for the treatment of heart diseases; and a pharmaceutical composition or the like for the treatment of heart diseases. Specifically disclosed are: a method for proliferating cardiomyocytes which uses a miRNA that has a cardiomyocyte proliferation promoting action; a vector for the treatment of heart diseases which comprises the miRNA; and a pharmaceutical composition or the like for the treatment of heart diseases which contains the vector. The miRNA is preferably one selected from the group consisting of miR 148a miR 148b miR 152 and miR 373 that are mature miRNAs precursors of the aforementioned miRNAs and mutants and analogues of the miRNAs and the precursors.

No. of Pages : 52 No. of Claims : 20

(12) PATENT APPLICATION PUBLICATION
(19) INDIA
(22) Date of filing of Application :10/09/2012
(21) Application No.7890/DELNP/2012 A
(43) Publication Date : 21/03/2014

(54) Title of the invention : TREATMENT OF CHICORY

(51) International classification :A23F5/44,A23L1/015
(31) Priority Document No :NA
(32) Priority Date :NA
(33) Name of priority country :NA
(86) International Application No :PCT/EP2010/052924
Filing Date :08/03/2010
(87) International Publication No :WO 2011/110213
(61) Patent of Addition to Application Number :NA
Filing Date :NA
(62) Divisional to Application Number :NA
Filing Date :NA

(71)**Name of Applicant :**
1)NESTEC S.A.
Address of Applicant :Avenue Nestl 55 CH 1800 Vevey Switzerland
(72)**Name of Inventor :**
1)LABRUNIE Thierry
2)KILCHHERR Sylvain
3)DUFFEY Jean Louis
4)MATHYS Alexander
5)PALZER Stephan
6)THEURILLAT MORITZ Viviane Andre Claude

(57) Abstract :
The invention relates to a method of treatment of chicory pieces which comprises a step of soaking non roasted chicory pieces by placing said chicory pieces in a bath of an aqueous solution comprising divalent cations wherein a pulsed electric field is applied to said chicory pieces during the soaking step.

No. of Pages : 15 No. of Claims : 9

(12) PATENT APPLICATION PUBLICATION
(19) INDIA
(22) Date of filing of Application :10/09/2012
(21) Application No.7892/DELNP/2012 A
(43) Publication Date : 21/03/2014

(54) Title of the invention : ORTHOPAEDIC INSTRUMENT

(51) International classification :A61B17/17
(31) Priority Document No :1003921.2
(32) Priority Date :10/03/2010
(33) Name of priority country :U.K.
(86) International Application No :PCT/EP2011/050862
Filing Date :21/01/2011
(87) International Publication No :WO 2011/110374
(61) Patent of Addition to Application Number :NA
Filing Date :NA
(62) Divisional to Application Number :NA
Filing Date :NA

(71)**Name of Applicant :**
1)DEPUY ORTHOPADIE GMBH
Address of Applicant :Kapellenstrasse 10 85622 Feldkirchen Germany
(72)**Name of Inventor :**
1)MANNSS Jurgen
2)BURGER Thorsten

(57) Abstract :
A patient specific instrument for use in a ball and socket joint arthroplasty procedure method of manufacture and method of use are described. The instrument comprises an attachment mechanism for attaching the instrument to the socket of the patient which has at least first and second parts which can engage the rim of the socket of the patient. Each part is shaped or can transform to a shape to match the shape of a respective portion of the rim of the socket. A body bears at least one guide formation for guiding a component to be used in the arthroplasty procedure. The instrument includes a locking mechanism by which the body and attachment mechanism can be assembled in a unique configuration into the patient specific instrument. The patient specific instrument is attachable to the socket of the patient only at a single pre planned position.

No. of Pages : 34 No. of Claims : 22

(12) PATENT APPLICATION PUBLICATION
(19) INDIA
(22) Date of filing of Application :10/09/2012
(21) Application No.7894/DELNP/2012 A
(43) Publication Date : 21/03/2014

(54) Title of the invention : CATALYST LIFE IMPROVEMENT FOR THE VAPOR PHASE MANUFACTURE OF 1 CHLORO 3 3 3 TRIFLUOROPROPENE

(51) International classification :C07C17/07,C07C17/25,C07C21/18
(31) Priority Document No :12/720763
(32) Priority Date :10/03/2010
(33) Name of priority country :U.S.A.
(86) International Application No :PCT/US2011/025369
Filing Date :18/02/2011
(87) International Publication No :WO 2011/112339
(61) Patent of Addition to Application Number :NA
Filing Date :NA
(62) Divisional to Application Number :NA
Filing Date :NA

(71)**Name of Applicant :**
1)HONEYWELL INTERNATIONAL INC.
Address of Applicant :Patent Services M/S AB/2B 101 Columbia Road P. O. Box 2245 Morristown New Jersey 07962 2245 U.S.A.
(72)**Name of Inventor :**
1)MERKEL Daniel C.
2)POKROVSKI Konstantin A.
3)TUNG Hsueh Sung Harry

(57) Abstract :
This invention achieves a catalyst life improvement for the catalyzed vapor phase reaction of 1 1 1 3 3 pentachloropropane with hydrogen fluoride to form 1 chloro 3 3 3 trifluoropropene by introducing an oxygen co feed into the fluorination reactor. By introduction of an oxygen co feed to the reactor feed the catalyst life was extended a minimum of two fold (2x).

No. of Pages : 16 No. of Claims : 10

(12) PATENT APPLICATION PUBLICATION
(19) INDIA
(22) Date of filing of Application :13/09/2012
(21) Application No.8000/DELNP/2012 A
(43) Publication Date : 21/03/2014

(54) Title of the invention : HIERARCHICAL MODELING OF PHYSICAL SYSTEMS AND THEIR UNCERTAINTIES

(51) International classification :G06G7/48
(31) Priority Document No :61/321358
(32) Priority Date :06/04/2010
(33) Name of priority country :U.S.A.
(86) International Application No :PCT/US2011/021141
Filing Date :13/01/2011
(87) International Publication No :WO 2011/126585
(61) Patent of Addition to Application Number :NA
Filing Date :NA
(62) Divisional to Application Number :NA
Filing Date :NA

(71)**Name of Applicant :**
1)EXXONMOBIL UPSTREAM RESEARCH COMPANY
Address of Applicant :CORP URC SW 359 P.O. Box 2189 Houston TX 77252 2189 U.S.A.
(72)**Name of Inventor :**
1)MIFFLIN Richard J.
2)RAY Michael B.

(57) Abstract :
A hierarchical modeling tool or process is provided that represents the full range of behavior of a hydrocarbon system accurately including uncertainties and potential events affecting the system. The potential events may include actions taken and information learned. The hierarchical modeling tool may be embedded within a decision support system or used in a stand alone fashion. Disclosed aspects may link from accurate (high detail) physics models to an accurate uncertainty representation and then reduce the accurate uncertainty representation to a high speed representation of both the physics model and the uncertainty that can be used in an optimizer.

No. of Pages : 48 No. of Claims : 20

(12) PATENT APPLICATION PUBLICATION
(19) INDIA
(22) Date of filing of Application :13/09/2012
(21) Application No.8001/DELNP/2012 A
(43) Publication Date : 21/03/2014

(54) Title of the invention : SURGICAL INSTRUMENT AND SURGICAL INSTRUMENT SYSTEM

(51) International classification :A61B17/15
(31) Priority Document No :1004851.0
(32) Priority Date :24/03/2010
(33) Name of priority country :U.K.
(86) International Application No :PCT/GB2011/050567
Filing Date :22/03/2011
(87) International Publication No :WO 2011/117623
(61) Patent of Addition to Application Number :NA
Filing Date :NA
(62) Divisional to Application Number :NA
Filing Date :NA

(71)**Name of Applicant :**
1)DEPUY (IRELAND)
Address of Applicant :Loughbeg County Cork Ringaskiddy Ireland
(72)**Name of Inventor :**
1)COWAN Dean
2)LESLIE Ian
3)VERTERAMO Alberto

(57) Abstract :
A surgical instrument for attachment to a cutting block having a cutting slot defining a cutting plane is described. The surgical instrument comprises a dual purpose indicator (2) member. The indicator member is configured to (i) allow visualisation of a first plane and (ii) to indicate a predetermined distance from a second plane perpendicular to the first plane. The surgical instrument also comprises an attachment member (14 16 18 20) for attaching the surgical instrument to the cutting slot in either of two mutually perpendicular orientations such that either the first plane or the second plane is parallel to the cutting plane. The surgical instrument can therefore be used both to visualise a plane of a cut and to indicate a distance from the plane of a cut depending on the orientation of the attachment member in the cutting slot. This allows inventory to be reduced because the surgical instrument can replace two prior art instruments. The surgical instrument may form part of a system with one or more cutting blocks.

No. of Pages : 13 No. of Claims : 15

(12) PATENT APPLICATION PUBLICATION
(19) INDIA
(22) Date of filing of Application :10/09/2012
(21) Application No.7887/DELNP/2012 A
(43) Publication Date : 21/03/2014

(54) Title of the invention : NON AQUEOUS HIGH CONCENTRATION REDUCED VISCOSITY SUSPENSION FORMULATIONS

(51) International classification :A61K48/00,A61K47/00
(31) Priority Document No :61/311,896
(32) Priority Date :09/03/2010
(33) Name of priority country :U.S.A.
(86) International Application No :PCT/US2011/027677
Filing Date :09/03/2011
(87) International Publication No :WO 2011/112669
(61) Patent of Addition to Application Number :NA
Filing Date :NA
(62) Divisional to Application Number :NA
Filing Date :NA

(71)**Name of Applicant :**
1)CENTOCOR ORTHO BIOTECH INC.
Address of Applicant :800/850 Ridgeview Drive Horsham PA 19044 U.S.A.
(72)**Name of Inventor :**
1)HILL Beth
2)DAI Weiguo

(57) Abstract :
The present invention relates to non aqueous high concentration reduced viscosity suspension formulations and methods of making and using them.

No. of Pages : 50 No. of Claims : 18

(12) PATENT APPLICATION PUBLICATION
(19) INDIA
(22) Date of filing of Application :10/09/2012
(21) Application No.7888/DELNP/2012 A
(43) Publication Date : 21/03/2014

(54) Title of the invention : HIGH STRENGTH HOT ROLLED STEEL PLATE AND MANUFACTURING METHOD THEREFOR

(51) International classification :C22C38/00,B21B3/00,C21D9/46
(31) Priority Document No :2010053787
(32) Priority Date :10/03/2010
(33) Name of priority country :Japan
(86) International Application No :PCT/JP2011/055556
Filing Date :09/03/2011
(87) International Publication No :WO 2011/111758
(61) Patent of Addition to Application Number :NA
Filing Date :NA
(62) Divisional to Application Number :NA
Filing Date :NA

(71)**Name of Applicant :**
1)NIPPON STEEL & SUMITOMO METAL CORPORATION
Address of Applicant :6 1 MARUNOUCHI 2 CHOME CHIYODA KU Tokyo 1008071 Japan
(72)**Name of Inventor :**
1)TAKAHASHI Yuzo
2)HAJI Junji
3)KAWANO Osamu

(57) Abstract :
An inclusion the major diameter of which is 3.0 μm or greater in a cross section having the plate width direction of a high strength hot rolled steel plate as the normal wherein the maximum value of the major diameter/minor diameter ratio represented by (the major diameter of the inclusion)/ (the minor diameter of the inclusion) is 8.0 or less and the sum of the rolling direction length per 1 mm cross section of a predetermined inclusion group consisting of a plurality of inclusions the major diameter of which is 3.0 μm or greater and a predetermined extended inclusion the length in the rolling direction of which is 30 μm or greater is 0.25 mm or less. The plurality of inclusions constituting the predetermined inclusion group are clustered at an interval of 50 μm or less with one another in both of the rolling direction and a direction perpendicular to the rolling direction. The predetermined extended inclusion is spaced at an interval of exceeding 50 μm from all inclusions the major diameter of which is 3.0 μm or greater in at least one of the rolling direction or the direction perpendicular thereto.

No. of Pages : 157 No. of Claims : 15

(12) PATENT APPLICATION PUBLICATION
(19) INDIA
(22) Date of filing of Application :10/09/2012
(21) Application No.7889/DELNP/2012 A
(43) Publication Date : 21/03/2014

(54) Title of the invention : DRUG DELIVERY DEVICE WITH SAFE CONNECTION MEANS

(51) International classification :A61M39/10
(31) Priority Document No :NA
(32) Priority Date :NA
(33) Name of priority country :NA
(86) International Application No :PCT/IB2010/000943
Filing Date :10/03/2010
(87) International Publication No :WO 2011/110888
(61) Patent of Addition to Application Number :NA
Filing Date :NA
(62) Divisional to Application Number :NA
Filing Date :NA

(71)**Name of Applicant :**
1)BECTON DICKINSON FRANCE
Address of Applicant :Rue Aristide Berg¨s F 38800 Le Pont de Claix France
(72)**Name of Inventor :**
1)FELIX FAURE Catherine
2)GUILLARD Benoit
3)BOSSHARDT Michel
4)PEROT Frdric

(57) Abstract :
The present invention relates to a drug delivery device (1) defining a reservoir (2) for containing a product having a distal end (3) comprising an end piece (5) defining a channel (6) for the transfer of the product from the reservoir said drug delivery device comprising means for coupling said end piece (5) with a connector said coupling means comprising a collar (7) defined around a portion of the end piece (5) and extending from the distal end (3) said coupling means comprising connection means (10; 20) connectable to said collar (7) said connection means (10 20) comprising a tubular wall portion having an interface (17) defined thereon for engagement with an internal face (7a) of said collar and a retaining hook (13) having engagement means (15) engageable with at least part of an external face (7b) of said collar (7) when said connection means (10) is connected to said collar (7).

No. of Pages : 21 No. of Claims : 13

(12) PATENT APPLICATION PUBLICATION
(19) INDIA
(22) Date of filing of Application :13/09/2012
(21) Application No.8007/DELNP/2012 A
(43) Publication Date : 21/03/2014

(54) Title of the invention : ELECTRICAL MACHINES

(51) International classification :H02K3/28,H02P1/46
(31) Priority Document No :10002803.4
(32) Priority Date :17/03/2010
(33) Name of priority country :EPO
(86) International Application No :PCT/EP2011/001272
Filing Date :15/03/2011
(87) International Publication No :WO 2011/113577
(61) Patent of Addition to Application Number :NA
Filing Date :NA
(62) Divisional to Application Number :NA
Filing Date :NA

(71)**Name of Applicant :**
1)GE ENERGY POWER CONVERSION TECHNOLOGY LIMITED
Address of Applicant :Boughton Road Rugby Warwickshire CV21 1BU U.K.
(72)**Name of Inventor :**
1)LEWIS Eric Anthony

(57) Abstract :
An ac synchronous electrical machine includes a stator (6) and a multi phase stator winding that defines a plurality of stator poles. The stator winding has two or more coil groups (Group 1 Group 2...) each coil group including a plurality of coils for each phase that are received in winding slots (4) in the stator (6). The stator winding is connected to a power source/sink (18). The coil groups (Group 1 Group 2...) are connected in series and each coil group is connected to a power source/sink (18) by a respective switch (26a 26b...). This allows one or more of the coil groups to be selectively supplied with power from the associated power source/sink (18) or selectively supply power to the associated power source/sink (18). The switches 26a 26b are operated by a controller 32. The coils in each coil group (Group 1 Group 2...) are arranged substantially symmetrically around the circumference of the stator (6) to define selected poles of the electrical machine and to produce a constant and balanced rotating torque when any particular coil group or combination of coil groups is active.

No. of Pages : 30 No. of Claims : 13

(12) PATENT APPLICATION PUBLICATION
(19) INDIA
(22) Date of filing of Application :13/09/2012
(21) Application No.8002/DELNP/2012 A
(43) Publication Date : 21/03/2014

(54) Title of the invention : HEAT EXCHANGER AND METHOD FOR PRODUCING SAME

(51) International classification :F28F9/02
(31) Priority Document No :2010060726
(32) Priority Date :17/03/2010
(33) Name of priority country :Japan
(86) International Application No :PCT/JP2011/055450
Filing Date :09/03/2011
(87) International Publication No :WO 2011/114952
(61) Patent of Addition to Application Number :NA
Filing Date :NA
(62) Divisional to Application Number :NA
Filing Date :NA

(71)**Name of Applicant :**
1)SANDEN CORPORATION
Address of Applicant :20 Kotobuki cho Isesaki shi Gunma 3728502 Japan
(72)**Name of Inventor :**
1)OHNO Takayuki

(57) Abstract :
Disclosed is a heat exchanger that is characterized by being configured from an inlet tank provided on the inlet side to which a heating medium is sent via one external piping an outlet tank provided on the outlet side from which the heating medium is sent via another external piping and a heat transfer tube that interconnects the inlet tank and the outlet tank and by a piping connector comprising: a cap member provided with a flat section that forms the tank end face on the external piping side and a cylindrical section that is vertically arranged from said flat section; and a joint member provided with a fitting hole that can fit to the cylindrical section and a piping contact section at which the external piping is contacted being provided to the end face on the external piping side of at least one of the inlet tank and the outlet tank. It is possible for the connecting section between the external piping and the tanks to be formed in a compact and low cost manner.

No. of Pages : 22 No. of Claims : 15

(12) PATENT APPLICATION PUBLICATION
(19) INDIA
(22) Date of filing of Application :13/09/2012
(21) Application No.8003/DELNP/2012 A
(43) Publication Date : 21/03/2014

(54) Title of the invention : FITTING FOR A VEHICLE SEAT

(51) International classification :B60N2/225
(31) Priority Document No :10 2010 022 615.7
(32) Priority Date :31/05/2010
(33) Name of priority country :Germany
(86) International Application No :PCT/EP2011/002420
Filing Date :17/05/2011
(87) International Publication No :WO 2011/151017
(61) Patent of Addition to Application Number :NA
Filing Date :NA
(62) Divisional to Application Number :NA
Filing Date :NA

(71)**Name of Applicant :**
1)KEIPER GMBH & CO. KG
Address of Applicant :Hertelsbrunnenring 2 67657 Kaiserslautern Germany
(72)**Name of Inventor :**
1)STILLEKE Martin
2)BLASS Eric
3)ROCK Arkadius

(57) Abstract :
The invention relates to a fitting (10) for a vehicle seat in particular for a motor vehicle seat comprising a first fitting part (11) on which a ring gear (17) is formed a second fitting part (12) on which a gear (16) is formed wherein said gear meshes with the ring gear (17) whereby the two fitting parts (11 12) are in transmission connection with each other and further comprising a rotatably supported eccentric (27 27) for driving a relative rolling motion of the gear (16) and the ring gear (17) wherein said eccentric rotates in the circumferential direction and is driven by a carrier (21). An installation space (B) that is sealed off from the outside at least in some locations is provided between the first fitting part (11) and the second fitting part (12) wherein a separating ring (61; 61) is arranged in the installation space (B). The separating ring divides the installation space (B) into an outer installation space (Ba) which is located near the gear train defined by the gear (16) and the ring gear (17) and an inner installation space (Bi) which is located near the eccentric (27 27).

No. of Pages : 21 No. of Claims : 10

(12) PATENT APPLICATION PUBLICATION
(19) INDIA
(22) Date of filing of Application :13/09/2012
(21) Application No.8004/DELNP/2012 A
(43) Publication Date : 21/03/2014

(54) Title of the invention : HEAT EXCHANGER AND METHOD FOR PRODUCING SAME

(51) International classification :F28F9/00,F28F9/02
(31) Priority Document No :2010060727
(32) Priority Date :17/03/2010
(33) Name of priority country :Japan
(86) International Application No :PCT/JP2011/055451
Filing Date :09/03/2011
(87) International Publication No :WO 2011/114953
(61) Patent of Addition to Application Number :NA
Filing Date :NA
(62) Divisional to Application Number :NA
Filing Date :NA

(71)**Name of Applicant :**
1)SANDEN CORPORATION
Address of Applicant :20 Kotobuki cho Isesaki shi Gunma 3728502 Japan
(72)**Name of Inventor :**
1)TAKAHASHI Yuuki
2)OHNO Takayuki

(57) Abstract :
Disclosed is a heat exchanger configured from: an inlet tank provided to the inlet side to which a heating medium is sent via one external piping; an outlet tank provided to the outlet side from which the heating medium is sent via another external piping; a plurality of heat transfer tubes that are layered while interconnecting the inlet tank and the outlet tank to each other; and a side plate that is provided to one end in the layering direction of said heat transfer tubes and that joins with the end section of one end in the layering direction of the inlet tank and the outlet tank characterized by a claw section being formed to the end section at one end in the layering direction of one tank of either the inlet tank or the outlet tank and by said claw section being caulked to a first concavity provided to the end section of the aforementioned side plate. The heat exchanger provided with an outer surface shape having few irregularities is provided with simple and stable quality.

No. of Pages : 18 No. of Claims : 9

(12) PATENT APPLICATION PUBLICATION
(19) INDIA
(22) Date of filing of Application :10/09/2012
(21) Application No.7899/DELNP/2012 A
(43) Publication Date : 21/03/2014

(54) Title of the invention : POWER SHARING NETWORK COMMUNICATIONS DEVICE

(51) International classification :H04L12/10,H04L12/40,G06F1/26
(31) Priority Document No :12/772700
(32) Priority Date :03/05/2010
(33) Name of priority country :U.S.A.
(86) International Application No :PCT/US2011/030460
Filing Date :30/03/2011
(87) International Publication No :WO 2011/139432
(61) Patent of Addition to Application Number :NA
Filing Date :NA
(62) Divisional to Application Number :NA
Filing Date :NA

(71)**Name of Applicant :**
1)CISCO TECHNOLOGY INC.
Address of Applicant :170 West Tasman Drive San Jose California 95134 1706 U.S.A.
(72)**Name of Inventor :**
1)SCHINDLER Frederick Roland
2)KLECKA III Rudolph B.
3)LENNARTZ Scott Lawrence
4)HERRMANN John Alvin
5)KANG Yonghan
6)WALKER Dylan
7)MCGAUGHEY Johnston Reid

(57) Abstract :
A set of network communications devices shares (48) available power among themselves to meet overall system power loading. An individual device (48) is configured to include a local power supply (28) delivering power to a local power bus (30) at a local supply voltage varied in response to a voltage control signal. A protection component (38) is connected between the local power bus (30) and an external power cable (18) used to connect the device to another device for sharing power. The protection component (38) provides an interruptible low impedance DC path for carrying current based on direction and magnitude of a voltage difference between the local power bus (30) and the external power cable (18. Control circuitry (42) is used to: (a) drive a current sharing bus connected among the devices to influence a value of a system current sharing signal indicating a level of system power loading among the devices; (b) generate a difference signal indicating a difference between local power loading of the local power supply and the system power loading reflected by the system current sharing signal; and (c) generate the voltage control signal based on the difference signal to achieve a predetermined sharing of the system power loading by the local power supply.

No. of Pages : 34 No. of Claims : 20

(12) PATENT APPLICATION PUBLICATION
(19) INDIA
(22) Date of filing of Application :13/09/2012
(21) Application No.8016/DELNP/2012 A
(43) Publication Date : 21/03/2014

(54) Title of the invention : METHOD AND APPARATUS FOR USE OF PERFORMANCE HISTORY DATA IN POSITIONING METHOD SELECTION

(51) International classification :H04W64/00
(31) Priority Document No :61/318995
(32) Priority Date :30/03/2010
(33) Name of priority country :U.S.A.
(86) International Application No :PCT/SE2011/050235
Filing Date :02/03/2011
(87) International Publication No :WO 2011/123016
(61) Patent of Addition to Application Number :NA
Filing Date :NA
(62) Divisional to Application Number :NA
Filing Date :NA

(71)**Name of Applicant :**
1)TELEFONAKTIEBOLAGET L M ERICSSON (PUBL)
Address of Applicant :SE 164 83 Stockholm Sweden
(72)**Name of Inventor :**
1)SIOMINA Iana
2)WIGREN Torbjrn

(57) Abstract :
A method (100) of selecting the positioning method(s) used to respond to given positioning requests uses historical performance data reflecting the actual performance yielded by one or more of the positioning methods that are generally available for selection. As a non limiting example a positioning node (14) maintains or otherwise has access to historical data reflecting the QoS obtained for at least some of the positioning methods supported by the node (14). Correspondingly the node (14) compares the QoS requirements associated with an incoming positioning request to the historical performance data to identify the positioning method(s) that appear to best satisfy the requirements. The positioning node (14) therefore selects the best method(s) for responding to a positioning request not based on generic performance characteristics of those methods but rather based on observed real world performance of those methods as applicable to the particular operating environment (radio environment) in which the positioning methods are carried out.

No. of Pages : 28 No. of Claims : 30

(12) PATENT APPLICATION PUBLICATION
(19) INDIA
(22) Date of filing of Application :13/09/2012
(21) Application No.8017/DELNP/2012 A
(43) Publication Date : 21/03/2014

(54) Title of the invention : VEHICLE CONTROL SYSTEM

(51) International classification :B60L3/00,B60L3/04,H02P27/06
(31) Priority Document No :2010146947
(32) Priority Date :28/06/2010
(33) Name of priority country :Japan
(86) International Application No :PCT/JP2011/065240
Filing Date :27/06/2011
(87) International Publication No:WO 2012/002554
(61) Patent of Addition to Application Number :NA
Filing Date :NA
(62) Divisional to Application Number :NA
Filing Date :NA

(71)**Name of Applicant :**
1)KABUSHIKI KAISHA TOSHIBA
Address of Applicant :1 1 Shibaura 1 chome Minato ku Tokyo 1058001 Japan
(72)**Name of Inventor :**
1)YASUOKA Ikuo
2)TODA Shinichi
3)NUMAZAKI Mitsuhiro
4)MANABE Hidetoshi
5)TAKAGI Takashi

(57) Abstract :
A system and method for a vehicle control system is disclosed herein. The system includes an inverter circuit a permanent magnet synchronous motor and a crossover connected between the inverter circuit and the permanent magnet synchronous motor. The system may also include at least one current sensor installed between the inverter circuit and the permanent magnet synchronous motor. A contactor may also be connected between the inverter circuit and the permanent magnet synchronous motor and may pass or shut off electricity between the inverter circuit and the permanent magnet synchronous motor. The system may also include a control unit connected to the contactor and the current sensor. The control unit may detect a current abnormality using information from the current sensor and open the contactor if an abnormality is detected.

No. of Pages : 21 No. of Claims : 20

(12) PATENT APPLICATION PUBLICATION
(19) INDIA
(22) Date of filing of Application :07/09/2012
(21) Application No.7817/DELNP/2012 A
(43) Publication Date : 21/03/2014

(54) Title of the invention : COMPRESSOR OF AN EXHAUST GAS TURBOCHARGER

(51) International classification :F02B39/00,F01D25/24
(31) Priority Document No :102010018429.2
(32) Priority Date :27/04/2010
(33) Name of priority country :Germany
(86) International Application No :PCT/US2011/033181
Filing Date :20/04/2011
(87) International Publication No :WO 2011/139561
(61) Patent of Addition to Application Number :NA
Filing Date :NA
(62) Divisional to Application Number :NA
Filing Date :NA

(71)**Name of Applicant :**
1)BORGWARNER INC.
Address of Applicant :Patent Department 3850 Hamlin Road Auburn Hills Michigan 48326 U.S.A.
(72)**Name of Inventor :**
1)DELLMANN Udo

(57) Abstract :
The invention relates to a compressor (8) of an exhaust gas turbocharger (1) having a compressor wheel (11) which can be driven in a compressor wheel direction of rotation (VR); having a compressor housing (10) in which the compressor wheel (1 1) is arranged as viewed in the flow direction of the inducted air between a preferably tubular compressor inlet (12) and a compressor outlet (13) and having an overrun air recirculation valve inflow duct (14 15) which runs in the compressor housing (10) from the compressor outlet (13) to the compressor inlet (12) wherein the inflow duct (14 15) opens into the compressor inlet (12) substantially in the circumferential direction with respect to the inner diameter (Di) of said compressor inlet (12).

No. of Pages : 10 No. of Claims : 4

(12) PATENT APPLICATION PUBLICATION
(19) INDIA
(22) Date of filing of Application :11/09/2012
(21) Application No.7920/DELNP/2012 A
(43) Publication Date : 21/03/2014

(54) Title of the invention : ADAPTIVE LINEAR FILTER FOR REAL TIME NOISE REDUCTION IN SURFACE PLASMON RESONANCE SENSORGRAMS

(51) International classification :G01N21/55,G06F17/00,H03H17/02
(31) Priority Document No :10502912
(32) Priority Date :29/03/2010
(33) Name of priority country:Sweden
(86) International Application No :PCT/SE2011/050340
Filing Date :28/03/2011
(87) International Publication No :WO 2011/123026
(61) Patent of Addition to Application Number :NA
Filing Date :NA
(62) Divisional to Application Number :NA
Filing Date :NA

(71)**Name of Applicant :**
1)GE HEALTHCARE BIO SCIENCES AB
Address of Applicant :Patent Department Bjrkgatan 30 S 751 84 Uppsala Sweden
(72)**Name of Inventor :**
1)S–DERMAN Tobias

(57) Abstract :
A method for linear filtering of noise in a sensorgram generated from a surface plasmon resonance apparatus the method comprising: providing a linear filter of variable length to filter an output signal in the sensorgram; and determining an optimal length of the linear filter based on a slope of the signal in the sensorgram and a locked interception linear error LILE detector.

No. of Pages : 17 No. of Claims : 11

(12) PATENT APPLICATION PUBLICATION
(19) INDIA
(22) Date of filing of Application :11/09/2012
(21) Application No.7921/DELNP/2012 A
(43) Publication Date : 21/03/2014

(54) Title of the invention : COMBINED WARP SIZING AND FIXING AGENT AND NEW METHOD FOR FIXING SULFUR DYESTUFFS ON WARP

(51) International classification :D06M13/46,D06M15/11,D06M15/427
(31) Priority Document No :10002401.7
(32) Priority Date :09/03/2010
(33) Name of priority country :EPO
(86) International Application No :PCT/EP2011/001033
Filing Date :02/03/2011
(87) International Publication No :WO 2011/110303
(61) Patent of Addition to Application Number :NA
Filing Date :NA
(62) Divisional to Application Number :NA
Filing Date :NA

(71)**Name of Applicant :**
1)CLARIANT FINANCE (BVI) LIMITED
Address of Applicant :Citco Building Wickhams Cay P.O. Box 662 Road Town Tortola VIRGIN ISLANDS
(72)**Name of Inventor :**
1)SCHUETTE Richard
2)JIMENEZ Manel

(57) Abstract :
The invention relates to a new warp sizing and fixing agent comprising a combination of modified cationic starch and cationic fixing agent. Such new warp sizing and fixing agent is suitable to be used in fully continuous dyeing processes if desired in combination with additional sizing additives.

No. of Pages : 18 No. of Claims : 10

(12) PATENT APPLICATION PUBLICATION
(19) INDIA
(22) Date of filing of Application :11/09/2012
(21) Application No.7922/DELNP/2012 A
(43) Publication Date : 21/03/2014

(54) Title of the invention : PHARMACEUTICAL COMPRISING MYRAMISTIN

(51) International classification :A61K31/131,A61K31/14,A61K31/16
(31) Priority Document No :PCT/EP2010/001056
(32) Priority Date :19/02/2010
(33) Name of priority country :EPO
(86) International Application No :PCT/EP2011/000691
Filing Date :15/02/2011
(87) International Publication No :WO 2011/101113
(61) Patent of Addition to Application Number :NA
Filing Date :NA
(62) Divisional to Application Number :NA
Filing Date :NA

(71)**Name of Applicant :**
1)MEGAINPHARM GMBH
Address of Applicant :Wrthersee S¼duferstr. 163 c 5 A 9082 Maria Wrth Austria
(72)**Name of Inventor :**
1)RUDKO Adolina

(57) Abstract :
The invention relates to a pharmaceutical including benzyldimethyl(3 [myristoylamino]propyl)ammonium chloride in the monohydrate form or in unhydrated form. The pharmaceutical further comprises dimethyl(3 [myristoylamino]propyl)ammonium oxide and/or dimethyl(3 [myristoylamino]propyl)amine in the appropriate pharmaceutical solvent.

No. of Pages : 22 No. of Claims : 16

(12) PATENT APPLICATION PUBLICATION
(19) INDIA
(22) Date of filing of Application :11/09/2012
(21) Application No.7923/DELNP/2012 A
(43) Publication Date : 21/03/2014

(54) Title of the invention : PROSTHESIS

(51) International classification :A61F2/34,A61F2/30,A61F2/00
(31) Priority Document No :1007166.0
(32) Priority Date :29/04/2010
(33) Name of priority country :U.K.
(86) International Application No :PCT/GB2011/050853
Filing Date :28/04/2011
(87) International Publication No :WO 2011/135377
(61) Patent of Addition to Application Number :NA
Filing Date :NA
(62) Divisional to Application Number :NA
Filing Date :NA

(71)**Name of Applicant :**
1)FINSBURY (DEVELOPMENT) LIMITED
Address of Applicant :13 Mole Business Park Randalls Leatherhead Surrey KT22 7BA U.K.
(72)**Name of Inventor :**
1)Taylor Andrew Clive

(57) Abstract :
A prosthesis comprising a plastics body and a plurality of barbed stakes extending from a bone facing surface of said body; said stakes being sized and located to provide fixation on impaction

No. of Pages : 22 No. of Claims : 12

(12) PATENT APPLICATION PUBLICATION
(19) INDIA
(22) Date of filing of Application :11/09/2012
(21) Application No.7924/DELNP/2012 A
(43) Publication Date : 21/03/2014

(54) Title of the invention : TERMINAL AND TELEVISION SERVICE PLAYING METHOD THEREOF

(51) International classification :H04N7/16
(31) Priority Document No :201010111477.9
(32) Priority Date :11/02/2010
(33) Name of priority country :China
(86) International Application No :PCT/CN2010/076080
Filing Date :17/08/2010
(87) International Publication No :WO 2011/097877
(61) Patent of Addition to Application Number :NA
Filing Date :NA
(62) Divisional to Application Number :NA
Filing Date :NA

(71)**Name of Applicant :**
1)ZTE CORPORATION
Address of Applicant :ZTE Plaza Keji Road South Hi Tech Industrial Park Nanshan District Shenzhen Guangdong 518057 China
(72)**Name of Inventor :**
1)HUANG Li

(57) Abstract :
The invention discloses a terminal and a television service playing method thereof wherein the method includes the following steps: the terminal obtains a service key from a service platform; the terminal accepts a program selection from a user; the terminal uses the obtained service key to play the program selected by the user. The invention ensures that a valid service key has been locally saved when a user selects a program to play thus the response speed for playing an encrypted program is accelerated and the user experience is enhanced.

No. of Pages : 20 No. of Claims : 10

(12) PATENT APPLICATION PUBLICATION
(19) INDIA
(22) Date of filing of Application :14/09/2012
(21) Application No.8041/DELNP/2012 A
(43) Publication Date : 21/03/2014

(54) Title of the invention : SEPARATION OF INSOLUBLE TARGET PROTEINS

(51) International classification :C07K1/14,C07K14/435
(31) Priority Document No :61/319542
(32) Priority Date :31/03/2010
(33) Name of priority country :U.S.A.
(86) International Application No :PCT/EP2011/001605
Filing Date :30/03/2011
(87) International Publication No :WO 2011/120690
(61) Patent of Addition to Application Number :NA
Filing Date :NA
(62) Divisional to Application Number :NA
Filing Date :NA

(71)**Name of Applicant :**
1)AMSILK GMBH
Address of Applicant :Am Klopferspitz 19 82152 Planegg/Martinsried Germany
(72)**Name of Inventor :**
1)SCHMIDT Martin
2)LEIMER Axel
3)R–MER Lin

(57) Abstract :
The present invention relates to a method of isolating an insoluble target protein from a suspension of intact or disrupted host cells. The invention also relates to insoluble target proteins which are obtainable by said method.

No. of Pages : 103 No. of Claims : 28

(12) PATENT APPLICATION PUBLICATION
(19) INDIA
(22) Date of filing of Application :11/09/2012
(21) Application No.7947/DELNP/2012 A
(43) Publication Date : 21/03/2014

(54) Title of the invention : SOLAR POWER GENERATION SYSTEM AND FEEDING SYSTEM

(51) International classification :H02M7/48,G05F1/67
(31) Priority Document No :2010056638
(32) Priority Date :12/03/2010
(33) Name of priority country :Japan
(86) International Application No :PCT/JP2011/053708
Filing Date :21/02/2011
(87) International Publication No :WO 2011/111511
(61) Patent of Addition to Application Number :NA
Filing Date :NA
(62) Divisional to Application Number :NA
Filing Date :NA

(71)**Name of Applicant :**
1)KABUSHIKI KAISHA TOSHIBA
Address of Applicant :1 1 Shibaura 1 chome Minato ku Tokyo 1058001 Japan
(72)**Name of Inventor :**
1)KIMURA Misao
2)NORO Yasuhiro
3)HAYASHI Hideki
4)OMATA Kazuya
5)ASANO Toshiaki
6)EBATA Yoshio

(57) Abstract :
A solar power generation system comprises: a DC power supply including a solar cell (3); a power conversion device (2) for converting DC power output from the DC power supply to AC power; a voltage detection unit (5) for detecting voltage output from the power conversion device (2) to a power system (1); a current detection unit (6) for detecting current output from the power conversion device (2) to the power system (1); an effective power detection unit (7) for detecting effective power from the output of the voltage detection unit (5) and the output of the current detection unit (6); a mass point system calculation unit (10) for calculating the angular frequency () of the voltage output from the power conversion device (2) on the basis of the output from the effective power detection unit (7) and an output target value (Pref) of the effective power; an electric characteristic calculation unit (21) for calculating an output voltage target value (Ec) of the power conversion device (2) on the basis of the angular frequency () a detection current value (IG) and a setting voltage value (Vref); and a power conversion control unit (14) for controlling the power conversion device (2) according to the output voltage target value (Ec).

No. of Pages : 39 No. of Claims : 10

(12) PATENT APPLICATION PUBLICATION
(19) INDIA
(22) Date of filing of Application :14/09/2012
(21) Application No.8044/DELNP/2012 A
(43) Publication Date : 21/03/2014

(54) Title of the invention : SILICONE HYDROGEL LENS FOR EYE AND CONTACT LENS

(51) International classification :C07F7/08,C08G77/00,C08L43/04
(31) Priority Document No :2010-061991
(32) Priority Date :18/03/2010
(33) Name of priority country :Japan
(86) International Application No :PCT/US2011/028847
Filing Date :17/03/2011
(87) International Publication No :WO 2011/116210
(61) Patent of Addition to Application Number :NA
Filing Date :NA
(62) Divisional to Application Number :NA
Filing Date :NA

(71)**Name of Applicant :**
1)JOHNSON & JOHNSON VISION CARE INC.
Address of Applicant :7500 Centurion Parkway Jacksonville 32256 U.S.A.
(72)**Name of Inventor :**
1)MAGGIO Thomas L.
2)TURNAGE Michelle Carman
3)FUJISAWA Kazuhiko
4)NAKAMURA Masataka

(57) Abstract :
The present invention provides transparent silicone hydrogels with high acrylamide monomer content and an excellent balance between moisture content. The silicone hydrogels may be obtained by polymerizing a monomer mix containing a plurality of monomers wherein the monomer mix comprises about 30 to about 98% by weight of at least one type of silicone monomer which is and about 1 to about 50% by weight of at least one type of non silicone type (meth)acrylamide monomer containing two or more hydroxyl groups within a molecule; wherein the weight percents are based upon the total amount of monomer components and polymer components in the monomer mix.

No. of Pages : 41 No. of Claims : 21

(12) PATENT APPLICATION PUBLICATION
(19) INDIA
(22) Date of filing of Application :14/09/2012
(21) Application No.8045/DELNP/2012 A
(43) Publication Date : 21/03/2014

(54) Title of the invention : PATTERNED COATING WITH TACKIFYING MATERIAL

(51) International classification :B60C1/00,B60C9/00,B60C9/11
(31) Priority Document No :12/661170
(32) Priority Date :11/03/2010
(33) Name of priority country :U.S.A.
(86) International Application No :PCT/EP2011/053601
Filing Date :10/03/2011
(87) International Publication No :WO 2011/110622
(61) Patent of Addition to Application Number :NA
Filing Date :NA
(62) Divisional to Application Number :NA
Filing Date :NA

(71)**Name of Applicant :**
1)MILLIKEN & COMPANY
Address of Applicant :920 Milliken Road Spartanburg SC 29303 U.S.A.
(72)**Name of Inventor :**
1)MICHIELS Dany F.
2)CATTEAU Franck
3)DELANOY Willy
4)PESCHEK Johann
5)EECKHOUT Peter

(57) Abstract :
A pneumatic tire carcass having at least one ply of stabilizing fabric. The stabilizing fabric has a machine direction and a cross machine direction. A plurality of high tenacity reinforcing yarn elements are disposed in the cross machine direction. A plurality of machine direction yarn elements of relatively lower tenacity than the reinforcing yarn elements are disposed in the machine direction. The stabilizing fabric may have an adhesion layer on both sides of the stabilizing fabric and may also contain a patterned coating of a tackifing material overlaying a portion of at least one side of the stabilizing fabric. A segment of the stabilizing fabric is disposed within the carcass with the machine direction yarn elements being in substantial alignment with the direction of tire rotation and with the cross machine direction oriented radially relative to the direction of tire rotation.

No. of Pages : 34 No. of Claims : 15

(12) PATENT APPLICATION PUBLICATION
(19) INDIA
(22) Date of filing of Application :14/09/2012
(21) Application No.8046/DELNP/2012 A
(43) Publication Date : 21/03/2014

(54) Title of the invention : HYBID CONSTRUCTION MACHINE AND METHOD FOR MEASURING CAPACITANCE OF CAPACITOR OF HYBRID CONSTRUCTION MACHINE

(51) International classification	:G01R31/36,E02F9/20,H01M10/48
(31) Priority Document No	:2010116803
(32) Priority Date	:20/05/2010
(33) Name of priority country	:Japan
(86) International Application No	:PCT/JP2011/061090
Filing Date	:13/05/2011
(87) International Publication No	:WO 2011/145531
(61) Patent of Addition to Application Number	:NA
Filing Date	:NA
(62) Divisional to Application Number	:NA
Filing Date	:NA

(71)**Name of Applicant :**
1)KOMATSU LTD.
Address of Applicant :2 3 6 Akasaka Minato ku Tokyo 1078414 Japan
(72)**Name of Inventor :**
1)JIMBO Shimon

(57) Abstract :
In order to enable more accurate measurement of the capacitance of an electric storage unit such as a capacitor disclosed is a hybrid construction machine provided with a measurement unit (202) which measures the capacitance of a capacitor (22) and a monitoring unit (202) which monitors a first condition that an engine is being driven a second condition that the adjustment value of a throttle dial (60) for adjusting the amount of fuel to be supplied to the engine is a maximum value a third condition that a working machine and/or a slewing upper structure is being locked and a fourth condition that the working mode is set to a power mode and when all the first to fourth conditions are satisfied transmits a control signal for starting the measurement of the capacitance of the capacitor (22) to the measurement unit (202). When all the conditions are not satisfied before the start of the measurement of the capacitance of the capacitor or during the measurement of the capacitance of the capacitor a display control unit (203) performs a transition to a screen on which an unsatisfied condition is displayed to thereby suppress the start of the measurement and the continuation of the measurement.

No. of Pages : 53 No. of Claims : 10

(12) PATENT APPLICATION PUBLICATION
(19) INDIA
(22) Date of filing of Application :11/09/2012
(21) Application No.7928/DELNP/2012 A
(43) Publication Date : 21/03/2014

(54) Title of the invention : CRYSTALLINE SALTS OF A POTENT HCV INHIBITOR

(51) International classification :C07D417/14,A61K31/427,A61P31/18
(31) Priority Document No :61/312791
(32) Priority Date :11/03/2010
(33) Name of priority country :U.S.A.
(86) International Application No :PCT/US2011/027807
Filing Date :10/03/2011
(87) International Publication No :WO 2011/112761
(61) Patent of Addition to Application Number :NA
Filing Date :NA
(62) Divisional to Application Number :NA
Filing Date :NA

(71)**Name of Applicant :**
1)BOEHRINGER INGELHEIM INTERNATIONAL GMBH
Address of Applicant :Binger Strasse 173 55216 Ingelheim am Rhein Germany
(72)**Name of Inventor :**
1)YANG Bing Shiou
2)YIP Ka

(57) Abstract :
This invention relates to novel tris(hydroxymethyl)aminomethane choline and N methyl D glucamine salt forms of the following Compound (1) and methods for the preparation thereof pharmaceutical compositions thereof and their use in the treatment of Hepatitis C Viral (HCV) infection:

No. of Pages : 39 No. of Claims : 13

(12) PATENT APPLICATION PUBLICATION
(19) INDIA
(22) Date of filing of Application :11/09/2012
(21) Application No.7929/DELNP/2012 A
(43) Publication Date : 21/03/2014

(54) Title of the invention : PUNCHING METHOD METHOD FOR MANUFACTURING PRESS FORMED ARTICLE PUNCHING DIE AND PRESS FORMED ARTICLE

(51) International classification :B21D28/00,B21D28/14
(31) Priority Document No :2010-055182
(32) Priority Date :11/03/2010
(33) Name of priority country :Japan
(86) International Application No :PCT/JP2011/054582
Filing Date :01/03/2011
(87) International Publication No :WO 2011/111563
(61) Patent of Addition to Application Number :NA
Filing Date :NA
(62) Divisional to Application Number :NA
Filing Date :NA

(71)**Name of Applicant :**
1)Kabushiki Kaisha F.C.C.
Address of Applicant :7000 36NakagawaHosoe choKita kuHamamatsu shi Shizuoka 4311304 Japan
(72)**Name of Inventor :**
1)Tsuboi Tsutomu

(57) Abstract :
Disclosed are a punching method a method for manufacturing a press formed article a punching die and a press formed article by which the press formed article having an inferior angle section in which two surfaces that are mutually adjacent form an inferior angle can be formed by punching with high accuracy. A punching die (100) for forming splines (14) on a core metal plate (11) constituting a friction plate body (10) is configured of a first shearing blade section (102) in a cylindrical shape and a second shearing blade section (103) formed in a gear shape. Meanwhile in cases when the splines (14) are formed in the inner peripheral section of the core metal plate (11) tooth crests (14c) in the splines (14) are first formed by strongly pressing the first shearing blade section (102) of the punching die (100) to the core metal plate (11). Bottom lands (14a) and side surfaces (14b) in the splines (14) are then formed by strongly pressing the second shearing blade section (103) of the punching die (100) to the tooth crests (14c) formed in the inner peripheral section of the core metal plate (11).

No. of Pages : 41 No. of Claims : 6

(12) PATENT APPLICATION PUBLICATION
(19) INDIA
(22) Date of filing of Application :14/09/2012
(21) Application No.8050/DELNP/2012 A
(43) Publication Date : 21/03/2014

(54) Title of the invention : STEEL FOR HIGH FREQUENCY HARDENING ROUGHLY MOLDED MATERIAL FOR HIGH FREQUENCY HARDENING AND PROCESS FOR PRODUCTION THEREOF AND HIGH FREQUENCY HARDENED STEEL MEMBER

(51) International classification :C22C38/60,C21D1/18,C21D9/30
(31) Priority Document No :2010078232
(32) Priority Date :30/03/2010
(33) Name of priority country :Japan
(86) International Application No :PCT/JP2011/053109
Filing Date :15/02/2011
(87) International Publication No :WO 2011/122134
(61) Patent of Addition to Application Number :NA
Filing Date :NA
(62) Divisional to Application Number :NA
Filing Date :NA

(71)**Name of Applicant :**
1)NIPPON STEEL & SUMITOMO METAL CORPORATION
Address of Applicant :6 1 Marunouchi 2 chome Chiyoda ku Tokyo 1008071 JAPAN
(72)**Name of Inventor :**
1)KUBOTA Manabu
2)AISO Toshiharu
3)MIYANISHI Kei

(57) Abstract :
A steel for high frequency hardening which comprises in mass% more than 0.75% and not more than 1.20% of C 0.002 to 3.00% of Si 0.20 to 2.00% of Mn 0.002 to 0.100% of S and more than 0.050% and not more than 3.00% of Al wherein the contents of P N and O are limited to 0.050% or less 0.0200% or less and 0.0030% or less respectively the remainder is made up by Fe and unavoidable impurities and the contents (in mass%) of Al and N in the steel meet the requirement represented by the following formula: Al (27/14)—N > 0.050%.

No. of Pages : 48 No. of Claims : 10

(12) PATENT APPLICATION PUBLICATION
(19) INDIA
(22) Date of filing of Application :14/09/2012
(21) Application No.8051/DELNP/2012 A
(43) Publication Date : 21/03/2014

(54) Title of the invention : OIL STORAGE TANK AND CONSTRUCTION VEHICLE

(51) International classification :B60K15/063,E02F9/00,E02F9/16
(31) Priority Document No :2011045619
(32) Priority Date :02/03/2011
(33) Name of priority country :Japan
(86) International Application No :PCT/JP2012/055384
Filing Date :02/03/2012
(87) International Publication No :WO 2012/118182
(61) Patent of Addition to Application Number :NA
Filing Date :NA
(62) Divisional to Application Number :NA
Filing Date :NA

(71)**Name of Applicant :**
1)KOMATSU LTD.
Address of Applicant :2 3 6 Akasaka Minato ku Tokyo 1078414 Japan
(72)**Name of Inventor :**
1)NISHIYAMA Wataru
2)SHIOTA Ryouji
3)YONEHARA Jun

(57) Abstract :
Provided are: an oil storage tank capable of increasing the ease of moving a foot to a step; and a construction vehicle provided with the oil storage tank. The oil storage tank (200) is provided with a hydraulic oil tank (210) a fuel oil tank (220) and a step (260). The hydraulic oil tank (210) supports the step (260). The fuel oil tank (220) has a concavity (221) formed by providing an inclined surface (220e) at the corner of intersection of a top surface (220a) a first side surface (220c) and a second side surface (220d).

No. of Pages : 77 No. of Claims : 25

(12) PATENT APPLICATION PUBLICATION
(19) INDIA
(22) Date of filing of Application :14/09/2012
(21) Application No.8052/DELNP/2012 A
(43) Publication Date : 21/03/2014

(54) Title of the invention : CONTROL DEVICE FOR AN ELECTRIC ACTUATOR

(51) International classification :F15B11/08,E02F9/20
(31) Priority Document No :2010116791
(32) Priority Date :20/05/2010
(33) Name of priority country :Japan
(86) International Application No :PCT/JP2011/060808
Filing Date :11/05/2011
(87) International Publication No :WO 2011/145488
(61) Patent of Addition to Application Number :NA
Filing Date :NA
(62) Divisional to Application Number :NA
Filing Date :NA

(71)**Name of Applicant :**
1)KOMATSU LTD.
Address of Applicant :2 3 6 Akasaka Minato ku Tokyo 1078414 Japan
(72)**Name of Inventor :**
1)TAKE Hiroaki
2)KAWAGUCHI Tadashi
3)MORINAGA Jun

(57) Abstract :
The disclosed control device (18) for an electric actuator controls an electric actuator that is capable of forward/backward reversed operation. Said control device is provided with: an operation means (20) that can be operated in a forward direction and a backward direction in accordance with the forward/backward reversed operation of the electric actuator (19); a pilot circuit (25) that is connected to the operation means (20) and generates forward pilot pressure or backward pilot pressure in accordance with the forward operation or backward operation of the operation means (20); a differential pressure acquisition means that acquires the difference between pilot pressure in the direction the operation means (20) was operated and pilot pressure in the opposite direction; a control command generation means (182) that generates a control command for the electric actuator (19) on the basis of the aforementioned generated differential pressure; and a drive control means (183) that on the basis of the generated control command controls the driving of the electric actuator (19).

No. of Pages : 26 No. of Claims : 2

(12) PATENT APPLICATION PUBLICATION
(19) INDIA
(22) Date of filing of Application :31/08/2012
(21) Application No.7611/DELNP/2012 A
(43) Publication Date : 21/03/2014

(54) Title of the invention : HETEROCYCLIC COMPOUND

(51) International classification :C07D495/04,A61K31/519,A61K31/5377
(31) Priority Document No :2010031899
(32) Priority Date :17/02/2010
(33) Name of priority country :Japan
(86) International Application No :PCT/JP2011/053303
Filing Date :16/02/2011
(87) International Publication No :WO 2011/102399
(61) Patent of Addition to Application Number :NA
Filing Date :NA
(62) Divisional to Application Number :NA
Filing Date :NA

(71)**Name of Applicant :**
1)TAKEDA PHARMACEUTICAL COMPANY LIMITED
Address of Applicant :1 1 Doshomachi 4 chome Chuo ku Osaka shi Osaka 5410045 Japan
(72)**Name of Inventor :**
1)HOMMA Misaki
2)MIYAZAKI Toru
3)OGURO Yuya
4)KURASAWA Osamu

(57) Abstract :
Provided is a compound useful for the prophylaxis or treatment of cancer. The present invention relates to a compound represented by formula (I): wherein each symbol in the formula is as defined in the specification, or a salt thereof or a prodrug thereof, which is useful for the prophylaxis or treatment of cancer.

No. of Pages : 385 No. of Claims : 20

(12) PATENT APPLICATION PUBLICATION
(19) INDIA
(22) Date of filing of Application :05/09/2012
(21) Application No.7719/DELNP/2012 A
(43) Publication Date : 21/03/2014

(54) Title of the invention : INKJET INK TANK

(51) International classification :B41J2/175
(31) Priority Document No :12/750732
(32) Priority Date :31/03/2010
(33) Name of priority country :U.S.A.
(86) International Application No :PCT/US2011/029500
Filing Date :23/03/2011
(87) International Publication No :WO 2011/123293
(61) Patent of Addition to Application Number :NA
Filing Date :NA
(62) Divisional to Application Number :NA
Filing Date :NA

(71)**Name of Applicant :**
1)EASTMAN KODAK COMPANY
Address of Applicant :343 State Street Rochester NY 14650 2201 U.S.A.
(72)**Name of Inventor :**
1)MURRAY Richard A.

(57) Abstract :
An ink tank for an inkjet printer includes a first end wall (272) having an ink outlet port; a second end wall (273) opposite the first end wall; a first sidewall (274) that extends a first length from the first end wall to the second end wall; a second sidewall (275) that extends a second length from the first end wall wherein the second length is less than the first length; and a connecting wall (276) that forms a recess and that connects the second end wall and the second sidewall.

No. of Pages : 44 No. of Claims : 26

(12) PATENT APPLICATION PUBLICATION
(19) INDIA
(22) Date of filing of Application :05/09/2012
(21) Application No.7720/DELNP/2012 A
(43) Publication Date : 21/03/2014

(54) Title of the invention : GRAPHITE ELECTRODE

(51) International classification :H04W92/08
(31) Priority Document No :61/360822
(32) Priority Date :01/07/2010
(33) Name of priority country :U.S.A.
(86) International Application No :PCT/US2011/042407
Filing Date :29/06/2011
(87) International Publication No :WO 2012/003228
(61) Patent of Addition to Application Number :NA
Filing Date :NA
(62) Divisional to Application Number :NA
Filing Date :NA

(71)**Name of Applicant :**
1)GRAFTECH INTERNATIONAL HOLDINGS INC.
Address of Applicant :12900 Snow Road Parma OH 44130 U.S.A.
(72)**Name of Inventor :**
1)COLEMAN Philip D.
2)MURRAY Greg E.
3)NAPOLITANO Marco
4)TOMASEK Aaron
5)BOWMAN Brian
6)KRASSOWSKI Daniel W.
7)FRASTACI Michael

(57) Abstract :
A graphite electrode exhibits oxidation resistance by modifying the outer radial surface characteristics. The outer radial surface may be modified by providing a textured portion which improves water flow while minimizing water absorbtion. Alternately a layer of flexible graphite or plurality of particles of exfoliated graphite may be disposed on the outer radial surface of the electrode body.

No. of Pages : 30 No. of Claims : 15

(12) PATENT APPLICATION PUBLICATION
(19) INDIA
(22) Date of filing of Application :11/09/2012
(21) Application No.7948/DELNP/2012 A
(43) Publication Date : 21/03/2014

(54) Title of the invention : SEAT BELT RETRACTOR

(51) International classification :B60R22/46
(31) Priority Document No :2010125002
(32) Priority Date :31/05/2010
(33) Name of priority country :Japan
(86) International Application No :PCT/JP2011/061715
Filing Date :23/05/2011
(87) International Publication No :WO 2011/152234
(61) Patent of Addition to Application Number :NA
Filing Date :NA
(62) Divisional to Application Number :NA
Filing Date :NA

(71)**Name of Applicant :**
1)ASHIMORI INDUSTRY CO. LTD.
Address of Applicant :10 18 Kitahorie 3 chome Nishi ku Osaka shi Osaka 5500014 Japan
(72)**Name of Inventor :**
1)NISHIKAWA Masao
2)TANAKA Masataka

(57) Abstract :
A first extension section extends approximately at right angles from that portion of a cover plate which is in the vicinity of an opening of a cylinder in such a way as to cover a plane section of the opening. A second extension section extends from a side edge of the first extension section in such a way as to cover an inclined section which tilts obliquely outward from the opening. Furthermore a base plate is formed in such a way that a pressing section extends by a predetermined length so as to face the upper side of the second extension section from that portion of a base plate which is in the vicinity of the inclined section formed by being partially cut obliquely outward from the opening of the cylinder.

No. of Pages : 39 No. of Claims : 3

(12) PATENT APPLICATION PUBLICATION
(19) INDIA
(22) Date of filing of Application :11/09/2012
(21) Application No.7949/DELNP/2012 A
(43) Publication Date : 21/03/2014

(54) Title of the invention : YEAST STRAINS AND THEIR USES IN THE PRODUCTION OF LIPIDS

(51) International classification :C12N1/16,C12N1/02,C12P7/64
(31) Priority Document No :61/313055
(32) Priority Date :11/03/2010
(33) Name of priority country :U.S.A.
(86) International Application No :PCT/US2011/028122
Filing Date :11/03/2011
(87) International Publication No :WO 2011/112948
(61) Patent of Addition to Application Number :NA
Filing Date :NA
(62) Divisional to Application Number :NA
Filing Date :NA

(71)**Name of Applicant :**
1)DSM IP ASSETS B.V.
Address of Applicant :Het Overloon 1 NL 6411 TE Heerlen Netherlands
(72)**Name of Inventor :**
1)APT Kirk E.
2)BARCLAY William R.
3)BEHRENS Paul Warren

(57) Abstract :
The invention is directed to isolated microorganisms as well as biomasses cultures microbial oils and compositions thereof. The invention also provides methods of producing the microbial oils and methods of using the isolated microorganisms biomasses and microbial oils.

No. of Pages : 51 No. of Claims : 44

(12) PATENT APPLICATION PUBLICATION
(19) INDIA
(22) Date of filing of Application :11/09/2012
(21) Application No.7950/DELNP/2012 A
(43) Publication Date : 21/03/2014

(54) Title of the invention : MATERNAL SIALIC ACID SUPPLEMENTATION

(51) International classification :A01N43/04,A61K31/70
(31) Priority Document No :61/313630
(32) Priority Date :12/03/2010
(33) Name of priority country :U.S.A.
(86) International Application No :PCT/US2011/028068
Filing Date :11/03/2011
(87) International Publication No :WO 2011/112913
(61) Patent of Addition to Application Number :NA
Filing Date :NA
(62) Divisional to Application Number :NA
Filing Date :NA

(71)**Name of Applicant :**
1)DSM IP Assets B.V.
Address of Applicant :Het Overloon 1 NL 6411 TE Heerlen Netherlands
(72)**Name of Inventor :**
1)ZIMMER John Paul
2)BUTT Christopher Michael

(57) Abstract :
The invention provides methods and compositions for improving fetal and child health and development through nutritional supplementation with for example sialic acid. Sialic acid can be provided to a female before during and/or after pregnancy to improve the health and development of a fetus and/or child. The sialic acid can be in a variety of forms in the supplements.

No. of Pages : 51 No. of Claims : 23

(12) PATENT APPLICATION PUBLICATION
(19) INDIA
(22) Date of filing of Application :14/09/2012
(21) Application No.8056/DELNP/2012 A
(43) Publication Date : 21/03/2014

(54) Title of the invention : TEMPERATURE STABLE LIQUID AQUEOUS POLYSACCHARIDE SUSPENSIONS AND USE THEREOF AS THICKENING AGENTS IN CEMENTITIOUS COMPOSITIONS

(51) International classification :C04B24/38,C04B28/02
(31) Priority Document No :10/51,812
(32) Priority Date :15/03/2010
(33) Name of priority country :France
(86) International Application No :PCT/FR2011/050404
Filing Date :28/02/2011
(87) International Publication No :WO 2011/114036
(61) Patent of Addition to Application Number :NA
Filing Date :NA
(62) Divisional to Application Number :NA
Filing Date :NA

(71)**Name of Applicant :**
1)CIMENTS FRANCAIS
Address of Applicant :5 Place de la Pyramide Tour Ariane Quartier Villon F 92800 Puteaux France
(72)**Name of Inventor :**
1)FABBRIS Faber
2)MEHALEBI Soraya

(57) Abstract :
The invention relates to a liquid aqueous suspension of polysaccharide containing a mass concentration of at least one polysaccharide of between 15 and 35 % in the form of partially hydrated particles dispersed in an aqueous solution of a strong base salt excluding ammonium salts with an ionic strength of between 1.25 mol/L and 15 mol/L having a pH greater than 9 and containing at least one non phyllitic crystalline mineral powder referred to hereafter as filler which is chemically inert in said aqueous suspension and which has a grain size of between 0.1 and 100 micrometres and an attapulgite in micronised form said aqueous suspension being stable at least in a temperature range from 5 to 30 30 °C. The invention is suitable for use as an agent for thickening cementitious compositions.

No. of Pages : 31 No. of Claims : 13

(12) PATENT APPLICATION PUBLICATION
(19) INDIA
(22) Date of filing of Application :11/09/2012
(21) Application No.7932/DELNP/2012 A
(43) Publication Date : 21/03/2014

(54) Title of the invention : IMAGE TEMPLATE MASKING

(51) International classification :G06K9/00
(31) Priority Document No :12/757250
(32) Priority Date :09/04/2010
(33) Name of priority country :U.S.A.
(86) International Application No :PCT/EP2011/054902
Filing Date :30/03/2011
(87) International Publication No :WO 2011/124512
(61) Patent of Addition to Application Number :NA
Filing Date :NA
(62) Divisional to Application Number :NA
Filing Date :NA

(71)**Name of Applicant :**
1)MONRO Donald Martin
Address of Applicant :6 The Lays Goose Street Beckington Frome Somerset BA11 6RS U.K.
(72)**Name of Inventor :**
1)MONRO Donald Martin

(57) Abstract :
A method of identifying images as matching comprises comparing two image templates using a master mask to select corresponding codes from the templates. The master mask excludes blocks from the matching process and/or weights blocks according to their known or expected reliability.

No. of Pages : 28 No. of Claims : 27

(12) PATENT APPLICATION PUBLICATION
(19) INDIA
(22) Date of filing of Application :11/09/2012
(21) Application No.7933/DELNP/2012 A
(43) Publication Date : 21/03/2014

(54) Title of the invention : STABILISED POTASSIUM BICARBONATE AND LOW SODIUM LEAVENING COMPOSITIONS

(51) International classification :A21D2/02,A21D2/04,A23L1/00
(31) Priority Document No :1004425.3
(32) Priority Date :17/03/2010
(33) Name of priority country :U.K.
(86) International Application No :PCT/GB2011/050519
Filing Date :16/03/2011
(87) International Publication No :WO 2011/114151
(61) Patent of Addition to Application Number :NA
Filing Date :NA
(62) Divisional to Application Number :NA
Filing Date :NA

(71)**Name of Applicant :**
1)KUDOS BLENDS LTD
Address of Applicant :Unit 5 Old Station Road Cleobury Mortimer Worcestershire DY14 8SY U.K.
(72)**Name of Inventor :**
1)BROWN Daniel James
2)JORDAN Diana

(57) Abstract :
Potassium bicarbonate is coated with an anionic or amphoteric surfactant which is preferably a metal soap such as calcium stearate to inhibit caking on storage and premature loss of carbon dioxide when mixed with acidulant in a baking powder or self raising flour blend. Loss of carbon dioxide in the blend may be further inhibited by coating the acidulant with surfactant. Combination of surfactant coating with an inorganic anti caking agent such as silicon dioxide gives synergistic protection against caking of the potassium bicarbonate. Preferably the bicarbonate has D50 of between 35 and 200μ and is free from particles greater than 400μ.

No. of Pages : 27 No. of Claims : 21

(12) PATENT APPLICATION PUBLICATION
(19) INDIA
(22) Date of filing of Application :11/09/2012
(21) Application No.7934/DELNP/2012 A
(43) Publication Date : 21/03/2014

(54) Title of the invention : METHOD AND INSTALLATION FOR LIQUEFYING FLUE GAS FROM COMBUSTION INSTALLATIONS

(51) International classification :F25J3/06,B01D53/00,C01B31/20
(31) Priority Document No :10002158.3
(32) Priority Date :03/03/2010
(33) Name of priority country :EPO
(86) International Application No :PCT/IB2011/000263
Filing Date :11/02/2011
(87) International Publication No :WO 2011/107840
(61) Patent of Addition to Application Number :NA
Filing Date :NA
(62) Divisional to Application Number :NA
Filing Date :NA

(71)**Name of Applicant :**
1)ALSTOM TECHNOLOGY LTD
Address of Applicant :Brown Boveri Strasse 7 CH 5400 Baden Switzerland
(72)**Name of Inventor :**
1)STALLMANN Olaf

(57) Abstract :
A method and a plant for producing liquid CO from flue gas as described with reduced energy consumption and a stable behaviour.

No. of Pages : 16 No. of Claims : 11

(12) PATENT APPLICATION PUBLICATION
(19) INDIA
(22) Date of filing of Application :11/09/2012
(21) Application No.7935/DELNP/2012 A
(43) Publication Date : 21/03/2014

(54) Title of the invention : USE OF NITROCARBOXYLIC ACIDS FOR THE TREATMENT DIAGNOSIS AND PROPHYLAXIS OF AGGRESSIVE HEALING PATTERNS

(51) International classification	:A61K9/00,A61K31/04,A61K31/201
(31) Priority Document No	:61/282675
(32) Priority Date	:15/03/2010
(33) Name of priority country	:U.S.A.
(86) International Application No	:PCT/EP2011/000429
Filing Date	:01/02/2011
(87) International Publication No	:WO 2011/113507
(61) Patent of Addition to Application Number	:NA
Filing Date	:NA
(62) Divisional to Application Number	:NA
Filing Date	:NA

(71)**Name of Applicant :**
1)DIETZ Ulrich
Address of Applicant :Regerstrae 1 65193 Wiesbaden Germany
(72)**Name of Inventor :**
1)DIETZ Ulrich

(57) Abstract :
The invention is directed to implants and medical devices having at least one layer which contains at least one nitrocarboxylic acid. These implants and medical devices shall be used for the prophylaxis and treatment of aggressive healing patterns. Furthermore this invention relates to the use of nitrocarboxylic acids and their pharmaceutically acceptable salts as a therapeutic agent for the prophylaxis and treatment of a pathophysiological or non physiological healing pattern due to exposure to a physical chemical or thermal irrtant of tissues cells or organelles.

No. of Pages : 87 No. of Claims : 15

(12) PATENT APPLICATION PUBLICATION
(19) INDIA
(22) Date of filing of Application :11/09/2012
(21) Application No.7936/DELNP/2012 A
(43) Publication Date : 21/03/2014

(54) Title of the invention : FLUORINE RESIN MOLDED ARTICLE AND PRODUCTION OF SAME

(51) International classification :C08F8/22,C08F8/30,C08F214/24
(31) Priority Document No :2010104776
(32) Priority Date :30/04/2010
(33) Name of priority country :Japan
(86) International Application No :PCT/IB2011/002990
Filing Date :02/05/2011
(87) International Publication No :WO 2012/038838
(61) Patent of Addition to Application Number :NA
Filing Date :NA
(62) Divisional to Application Number :NA
Filing Date :NA

(71)**Name of Applicant :**
1)DUPONT MITSUI FLUOROCHEMICALS COMPANY LTD.
Address of Applicant :1 5 18 Sarugaku Cho Chiyoda Ku Tokyo 1010064 Japan
(72)**Name of Inventor :**
1)PHAM Hoai Nam
2)YABE Hiromasa
3)LEE Jeong Chang

(57) Abstract :
To provide a fluororesin molded article having a lowered concentration of eluted fluorine ions subsequent to molding and to provide a method for producing a fluororesin molded article a fluororesin molded article and a fluororesin composition whereby the concentration of eluted fluorine ions is lowered. [Means] A method for producing a fluororesin molded article in which fluororesin is melt molded in the presence of a fluorine ion lowering compound the molded article obtained thereby and a fluororesin composition. Ammonia urea nitrogen compounds that generate ammonia and alkalis are preferred examples of the fluorine ion lowering compound. The present invention also offers a molded article formed from tetrafluoroethylene/perfluoro(alkylvinyl ether) that has a fluorine ion concentration of 1 ppm or less.

No. of Pages : 18 No. of Claims : 23

(12) PATENT APPLICATION PUBLICATION
(19) INDIA
(22) Date of filing of Application :14/09/2012
(21) Application No.8066/DELNP/2012 A
(43) Publication Date : 21/03/2014

(54) Title of the invention : ARTHRODESIS IMPLANT

(51) International classification :A61F2/42
(31) Priority Document No :10/51673
(32) Priority Date :09/03/2010
(33) Name of priority country :France
(86) International Application No :PCT/FR2011/050473
Filing Date :08/03/2011
(87) International Publication No :WO 2011/110784
(61) Patent of Addition to Application Number :NA
Filing Date :NA
(62) Divisional to Application Number :NA
Filing Date :NA

(71)**Name of Applicant :**
1)SYNCHRO MEDICAL
Address of Applicant :21 rue des Merisiers F 68920 Wettolsheim Les Erlen France
(72)**Name of Inventor :**
1)AVEROUS Christophe
2)CERMOLACCE Christophe
3)DETERME Patrice
4)DIEBOLD Patrice
5)GUILLO Stphane
6)ROCHER Hubert
7)ROY Christophe

(57) Abstract :
The invention relates to an implant (1) for osseous fusion between two bones including a first portion (20) having a longitudinal axis A for being inserted in the first bone and including a first means (24) for attaching said implant in said first bone and a second portion (30) having a longitudinal axis B for being inserted in the second bone and including a second means (34) for attaching said implant in said second bone said first and second portions (20 30) being connected by a central core (40) said central core being a solid body the cross section of which in a plane perpendicular to said longitudinal axis A has the shape of a star having at least three points (41 42 43) said first portion having three tabs (21 22 23) each tab extending along said longitudinal axis A from the free end (41a 42a 43a) of one of the points of said central core.

No. of Pages : 26 No. of Claims : 12

(12) PATENT APPLICATION PUBLICATION
(19) INDIA
(22) Date of filing of Application :11/09/2012
(21) Application No.7938/DELNP/2012 A
(43) Publication Date : 21/03/2014

(54) Title of the invention : METHOD AND APPARATUS FOR MANUFACTURING UOE STEEL PIPE

(51) International classification	:B21C37/08,B21C37/083,B21C51/00
(31) Priority Document No	:2010072627
(32) Priority Date	:26/03/2010
(33) Name of priority country	:Japan
(86) International Application No	:PCT/JP2011/057389
Filing Date	:25/03/2011
(87) International Publication No	:WO 2011/118783
(61) Patent of Addition to Application Number	:NA
Filing Date	:NA
(62) Divisional to Application Number	:NA
Filing Date	:NA

(71)**Name of Applicant :**
1)NIPPON STEEL & SUMITOMO METAL CORPORATION
Address of Applicant :6-1, MARUNOUCHI 2-CHOME, CHIYODA-KU, TOKYO 100-8071, JAPAN
(72)**Name of Inventor :**
1)WATANABE Yasushi

(57) Abstract :
Disclosed is a method for manufacturing a UOE steel pipe which determines whether the shapes of the bevels formed at the edge portions of the base steel plate of the UOE steel pipe by an edge planer are normal or not and speedily outputs to an operator the necessity to correct the shapes of the bevels when necessary. A thick plate (7) with the bevels (8a 8b) formed at the edge portions (7a 7b) is sequentially subjected to C press operation U press operation and O press operation thereby obtaining an open pipe (13) and the bevels (8a 8b) of the open pipe (13) are butt welded so that the UOE steel pipe (30) is manufactured. In manufacturing the UOE steel pipe (30) the shapes of the bevels (8a 8b) of the thick plate (7) before being subjected to the C press operation are measured by a bevel shape measuring device (6) and on the basis of the result of the measurement the necessity to correct the shapes of the bevels (8a 8b) of the thick plate (7) is determined before the C press operation is started.

No. of Pages : 34 No. of Claims : 5

(12) PATENT APPLICATION PUBLICATION
(19) INDIA
(22) Date of filing of Application :11/09/2012
(21) Application No.7939/DELNP/2012 A
(43) Publication Date : 21/03/2014

(54) Title of the invention : AILDENAFIL CITRATE CRYSTAL FORM O PREPARATION METHOD AND USE THEREOF

(51) International classification :C07D487/04,A61K31/519,A61P15/10
(31) Priority Document No :201010172926.0
(32) Priority Date :10/05/2010
(33) Name of priority country :China
(86) International Application No :PCT/CN2011/071725
Filing Date :11/03/2011
(87) International Publication No :WO 2011/140858
(61) Patent of Addition to Application Number :NA
Filing Date :NA
(62) Divisional to Application Number :NA
Filing Date :NA

(71)**Name of Applicant :**
1)LIU Guikun
Address of Applicant :Room 4E Arran Building New Century Garden Qifeng Road Dongcheng Dongguan Guangdong 523123 China
(72)**Name of Inventor :**
1)LIU Guikun

(57) Abstract :
1 [3 (6 7 dihydro 1 methyl 7 oxo 3 propyl 1H pyrazol[4 3 d] pyridin 5 yl) 4 ethoxybenzene sulfonyl] cis 3 5 lupetazin citrate or Aildenafil citrate crystal form O and the preparation method thereof are provided. The pharmaceutical compositions containing Aildenafil citrate crystal form O and the use thereof in preparing the drugs for treating male erectile dysfunction (ED) are also provided. The crystal form O can be prepared by the steps of: dissolving the raw material Aildenafil citrate in the mixed solution of distillation water and tetrahydrofuran stirring raising temperature filtering stirring filtrate reducing temperature holding temperature crystallizing filtering and so on. Drugs can be prepared from the crystal form O together with the pharmaceutically acceptable excipients and then used in treating male sexual dysfunction disease.

No. of Pages : 24 No. of Claims : 9

(12) PATENT APPLICATION PUBLICATION
(19) INDIA
(22) Date of filing of Application :14/09/2012
(21) Application No.8060/DELNP/2012 A
(43) Publication Date : 21/03/2014

(54) Title of the invention : METHOD OF ASSESSING ROLLING CONTACT METALLIC MATERIAL SHEAR STRESS FATIGUE VALUES AND METHOD AND DEVICE USING SAME THAT ESTIMATE FATIGUE LIMIT SURFACE PRESSURE

(51) International classification :G01N3/34
(31) Priority Document No :2010059357
(32) Priority Date :16/03/2010
(33) Name of priority country :Japan
(86) International Application No :PCT/JP2011/056037
Filing Date :15/03/2011
(87) International Publication No :WO 2011/115101
(61) Patent of Addition to Application Number :NA
Filing Date :NA
(62) Divisional to Application Number :NA
Filing Date :NA

(71)**Name of Applicant :**
1)NTN CORPORATION
Address of Applicant :3 17 Kyomachibori 1 chome Nishi ku Osaka shi Osaka 5500003 Japan
(72)**Name of Inventor :**
1)MATSUBARA Yukio
2)SAKANAKA Noriaki
3)ISHII Hitoshi

(57) Abstract :
A method of assessing rolling contact metallic material shear stress fatigue values comprises the steps of deriving by an ultrasound torsion fatigue test a relationship between a rolling contact metallic material shear stress amplitude and a load cycles (S1); and determining from the relationship between the shear stress amplitude and the load cycles derived in the test step (S1) a shear fatigue strength tlim in an extended longevity region according to a set reference (S2). The ultrasound torsion fatigue test is a complete alternating torsion fatigue test which applies torsion oscillation to a test part (1) wherein the torsion oscillation is such that the torsion is symmetrical in the positive rotational direction and the inverse rotational direction.

No. of Pages : 140 No. of Claims : 25

(12) PATENT APPLICATION PUBLICATION
(19) INDIA
(22) Date of filing of Application :14/09/2012
(21) Application No.8061/DELNP/2012 A
(43) Publication Date : 21/03/2014

(54) Title of the invention : MEDIA KITS SYSTEMS AND METHODS FOR THE MICROPROPAGATION OF BAMBOO

(51) International classification :C12N5/00,A01N43/90
(31) Priority Document No :61/304681
(32) Priority Date :15/02/2010
(33) Name of priority country :U.S.A.
(86) International Application No :PCT/US2011/024936
Filing Date :15/02/2011
(87) International Publication No :WO 2011/100762
(61) Patent of Addition to Application Number :NA
Filing Date :NA
(62) Divisional to Application Number :NA
Filing Date :NA

(71)**Name of Applicant :**
1)THE RED TRIANGLE LCC
Address of Applicant :17618 Dunbar Road Mount Vernon WA 98273 U.S.A.
(72)**Name of Inventor :**
1)BURR Randall W.
2)HEINRICHER Jackie

(57) Abstract :
Disclosed herein are media kits systems and methods for achieving micropropagation of bamboo on a commercially relevant scale.

No. of Pages : 81 No. of Claims : 19

(12) PATENT APPLICATION PUBLICATION
(19) INDIA
(22) Date of filing of Application :12/09/2012
(21) Application No.7958/DELNP/2012 A
(43) Publication Date : 21/03/2014

(54) Title of the invention : PHASE LOCKED LOOP BASED TORSIONAL MODE DAMPING SYSTEM AND METHOD

(51) International classification :H02P21/05,H02P9/10,H02P29/00
(31) Priority Document No :CO2010A000010
(32) Priority Date :01/04/2010
(33) Name of priority country :Italy
(86) International Application No :PCT/EP2011/054963
Filing Date :30/03/2011
(87) International Publication No :WO 2011/121049
(61) Patent of Addition to Application Number :NA
Filing Date :NA
(62) Divisional to Application Number :NA
Filing Date :NA

(71)**Name of Applicant :**
1)NUOVO PIGNONE S.P.A.
Address of Applicant :Via Felice Matteucci 2 I 50127 Florence Italy
(72)**Name of Inventor :**
1)DE FRANCISCIS Sergio

(57) Abstract :
A torsional mode damping controller system is connected to a converter or placed inside the converter. The converter is driving a drive train including an electrical machine and a non electrical machine. The controller system includes a first input interface configured to receive a first digital signal from a first phase lock device or a first dynamic observer a second input interface configured to receive a second digital signal from a second phase lock device or a second dynamic observer and a controller connected to the first and second input interfaces. The controller is configured to receive the first and second digital signals compare the first digital signal with the second digital signal generate control data for a rectifier and/or an inverter of the converter and send the control data to the rectifier and/or to the inverter.

No. of Pages : 50 No. of Claims : 10

(12) PATENT APPLICATION PUBLICATION
(19) INDIA
(22) Date of filing of Application :17/09/2012
(21) Application No.8083/DELNP/2012 A
(43) Publication Date : 21/03/2014

(54) Title of the invention : AGOMELATINE HYDROBROMIDE HYDRATE AND PREPARATION THEREOF

(51) International classification	:C07C233/18,C07C231/12,A61K31/165
(31) Priority Document No	:201010126263.9
(32) Priority Date	:17/03/2010
(33) Name of priority country	:China
(86) International Application No	:PCT/CN2011/071912
Filing Date	:17/03/2011
(87) International Publication No	:WO 2011/113363
(61) Patent of Addition to Application Number	:NA
Filing Date	:NA
(62) Divisional to Application Number	:NA
Filing Date	:NA

(71)**Name of Applicant :**
1)LES LABORATOIRES SERVIER
Address of Applicant :35 Rue de Verdun 92284 Suresnes Cedex France
(72)**Name of Inventor :**
1)SHAN Hanbin
2)YUAN Zhedong
3)ZHU Xueyan
4)ZHANG Peng
5)PAN Hongjuan
6)YU Xiong

(57) Abstract :
An agomelatine hydrobromide hydrate of formula (I) in which X is Br preparation method and use thereof as well as pharmaceutical composition containing it are provided. The solubility of the agomelatine hydrobromide hydrate obtained by the present method is significantly higher than that of agomelatine. Therefore it is more suitable for manufacturing pharmaceutical formulations. In addition the product has higher stability and purity. The present product of high purity can be obtained through a simple process, rather than process with complicated steps.

No. of Pages : 10 No. of Claims : 10

(12) PATENT APPLICATION PUBLICATION
(19) INDIA
(22) Date of filing of Application :17/09/2012
(21) Application No.8084/DELNP/2012 A
(43) Publication Date : 21/03/2014

(54) Title of the invention : AGOMELATINE HYDROCHLORIDE HYDRATE AND PREPARATION THEREOF

(51) International classification :C07C233/18,C07C231/12,A61K31/165
(31) Priority Document No :201010126254.X
(32) Priority Date :17/03/2010
(33) Name of priority country :China
(86) International Application No :PCT/CN2011/071910
Filing Date :17/03/2011
(87) International Publication No :WO 2011/113362
(61) Patent of Addition to Application Number :NA
Filing Date :NA
(62) Divisional to Application Number :NA
Filing Date :NA

(71)**Name of Applicant :**
1)LES LABORATOIRES SERVIER
Address of Applicant :35 Rue de Verdun 92284 Suresnes Cedex France
(72)**Name of Inventor :**
1)SHAN Hanbin
2)YUAN Zhedong
3)ZHU Xueyan
4)ZHANG Peng
5)PAN Hongjuan
6)YU Xiong

(57) Abstract :
An agomelatine hydrochloride hydrate of formula (I) preparation use and pharmaceutical composition thereof are provided. Said hydrate obtained through the present method has significant increased solubi1ity than agomelatine and therefore is more suitable for manufacturing pharmaceutical formulations. Using the present method high purity can be obtained through a simple process free of any complicated steps. Wherein X is Cl.

No. of Pages : 8 No. of Claims : 10

(12) PATENT APPLICATION PUBLICATION
(19) INDIA
(22) Date of filing of Application :17/09/2012
(21) Application No.8085/DELNP/2012 A
(43) Publication Date : 21/03/2014

(54) Title of the invention : METHOD OF IDENTIFYING A PROTOCOL GIVING RISE TO A DATA FLOW

(51) International classification :H04L12/24,H04L29/06,H04L12/26
(31) Priority Document No :10 01062
(32) Priority Date :17/03/2010
(33) Name of priority country :France
(86) International Application No :PCT/FR2011/050541
Filing Date :17/03/2011
(87) International Publication No :WO 2011/114060
(61) Patent of Addition to Application Number :NA
Filing Date :NA
(62) Divisional to Application Number :NA
Filing Date :NA

(71)**Name of Applicant :**
1)THALES
Address of Applicant :45 rue de Villiers F 92200 Neuilly Sur Seine France
(72)**Name of Inventor :**
1)DUBOIS Renaud
2)MOREL Mathieu
3)GOMPEL Paul

(57) Abstract :
Method of identifying a protocol at the origin of a data flow. The method of identifying a protocol giving rise to a packet flow comprises the following steps: a capture (102) of the flow of the protocol to be identified statistical classification of the flow comprising an extraction of the classification parameters and a comparison of the classification parameters with statistical models constructed during a learning phase. The statistical classification comprises: a first phase (108) of global statistical classification; and a step (120) of synthesis of the results of the first and second classification phases (108 110) so as to identify the protocol giving rise to the flow.

No. of Pages : 20 No. of Claims : 10

(12) PATENT APPLICATION PUBLICATION
(19) INDIA
(22) Date of filing of Application :17/09/2012
(21) Application No.8086/DELNP/2012 A
(43) Publication Date : 21/03/2014

(54) Title of the invention : BELT TENSIONER

(51) International classification :B60R22/46
(31) Priority Document No :10 2010 009 155.3
(32) Priority Date :24/02/2010
(33) Name of priority country :Germany
(86) International Application No :PCT/EP2011/000260
Filing Date :22/01/2011
(87) International Publication No :WO 2011/103948
(61) Patent of Addition to Application Number :NA
Filing Date :NA
(62) Divisional to Application Number :NA
Filing Date :NA

(71)**Name of Applicant :**
1)AUTOLIV DEVELOPMENT AB
Address of Applicant :Wallentinsvgen 22 S 44783 Vrgrda Sweden
(72)**Name of Inventor :**
1)LARSSON Linus Karl Axel

(57) Abstract :
The invention relates to a belt tensioner comprising a housing a belt shaft (10) a force limiting device (70) connected to the belt shaft (10) and a tensioner drive wheel (20) coupled to the belt shaft (10) in a rotationally fixed manner wherein a coupling element (60) fixed in the circumferential direction by means of a detachable connection is arranged on the tensioner drive wheel (20) and can be blocked so as to be fixed to the housing in the belt extraction direction by a blocking device (90) and the detachable connection between the coupling element (60) and the tensioner drive wheel (20) can be detached by the blocking of the coupling element (60) so as to be fixed to the housing and a rotation of the belt shaft (10) in the belt extraction direction.

No. of Pages : 13 No. of Claims : 7

(12) PATENT APPLICATION PUBLICATION
(19) INDIA
(22) Date of filing of Application :12/09/2012
(21) Application No.7974/DELNP/2012 A
(43) Publication Date : 21/03/2014

(54) Title of the invention : OPACIFYING PIGMENT PARTICLE

(51) International classification :C09C1/14,C09C1/24,C09C1/36
(31) Priority Document No :61/340070
(32) Priority Date :12/03/2010
(33) Name of priority country :U.S.A.
(86) International Application No :PCT/US2010/002873
Filing Date :01/11/2010
(87) International Publication No :WO 2011/112170
(61) Patent of Addition to Application Number :NA
Filing Date :NA
(62) Divisional to Application Number :NA
Filing Date :NA

(71)**Name of Applicant :**
1)ROHM AND HAAS COMPANY
Address of Applicant :100 Independence Mall West Philadelphia PA 19106 2399 U.S.A.
(72)**Name of Inventor :**
1)ALLEN Nathan T.
2)BATZELL Andrew G.
3)HEUTS Martin
4)BROWN Ward T.

(57) Abstract :
A process for forming an opacifying pigment encapsulated in polymer including (a) dispersing a pigment particle having an average particle diameter of from 150 to 500 nm and an index of refraction of at least 1.8 such as for example TiO2 in a medium with from 0.1% to 10% by weight based on the weight of said pigment particle sulfur acid functional first polymer whereby the zeta potential of the dispersed pigment particle is less than 28 mV between pH 5 and pH 8; and (b) performing an emulsion polymerization in the presence of the dispersed pigment particle to provide from 10% to 200% by weight based on the weight of the pigment particle second polymer that at least partially encapsulates the dispersed pigment particle. Also provided are the encapsulated pigment particle so formed and compositions including the encapsulated pigment particle.

No. of Pages : 27 No. of Claims : 18

(12) PATENT APPLICATION PUBLICATION
(19) INDIA
(22) Date of filing of Application :12/09/2012
(21) Application No.7975/DELNP/2012 A
(43) Publication Date : 21/03/2014

(54) Title of the invention : MOLD ASSEMBLY WITH INTEGRATED MELTING DEVICE

(51) International classification :B29C33/02
(31) Priority Document No :61/321927
(32) Priority Date :08/04/2010
(33) Name of priority country :U.S.A.
(86) International Application No :PCT/US2011/030102
Filing Date :26/03/2011
(87) International Publication No :WO 2011/126780
(61) Patent of Addition to Application Number :NA
Filing Date :NA
(62) Divisional to Application Number :NA
Filing Date :NA

(71)**Name of Applicant :**
1)HUSKY INJECTION MOLDING SYSTEMS LTD
Address of Applicant :500 Queen Street South Bolton Ontario L7E 5S5 Canada
(72)**Name of Inventor :**
1)BELZILE Manon Danielle
2)HONTHEIM Daniel

(57) Abstract :
A platen supported system (105) for use with a molding system platen structure (107) the platen supported system (105) comprising: a frame assembly (103) connectable with the molding system platen structure (107); and at least one plasticating device (201) supported by the frame assembly (103). A molding system (100) having a mold frame assembly (203) configured for supporting a molding assembly (200) and the at least one plasticating device (201) located within the mold assembly (200).

No. of Pages : 30 No. of Claims : 12

(12) PATENT APPLICATION PUBLICATION
(19) INDIA
(22) Date of filing of Application :12/09/2012
(21) Application No.7976/DELNP/2012 A
(43) Publication Date : 21/03/2014

(54) Title of the invention : ANTI COAGULANT INFUSION FLUID SOURCE

(51) International classification :A61B5/145,A61M5/00,A61K31/727
(31) Priority Document No :61/310236
(32) Priority Date :03/03/2010
(33) Name of priority country :U.S.A.
(86) International Application No :PCT/US2011/026630
Filing Date :01/03/2011
(87) International Publication No :WO 2011/109356
(61) Patent of Addition to Application Number :NA
Filing Date :NA
(62) Divisional to Application Number :NA
Filing Date :NA

(71)**Name of Applicant :**
1)EDWARDS LIFESCIENCES CORPORATION
Address of Applicant :One Edward Way Irvine CA 92614 U.S.A.
(72)**Name of Inventor :**
1)PETISCE James
2)OLIN Jane
3)PASTER Eden
4)TRINH Kristie

(57) Abstract :
Methods and systems for preventing or eliminating blood coagulation or thrombus during use of an intravenous anti thrombotic sensor are disclosed. The method further comprises for providing antimicrobial into the infusion fluid source. An anti thrombotic sensor is also disclosed that comprises a coating of a complex of a non heparin anti thrombotic agent and an alkylbenzyldimethyl ammonium cationic salt.

No. of Pages : 35 No. of Claims : 29

(12) PATENT APPLICATION PUBLICATION
(19) INDIA
(22) Date of filing of Application :12/09/2012
(21) Application No.7978/DELNP/2012 A
(43) Publication Date : 21/03/2014

(54) Title of the invention : HARD CAPSULE AND METHOD FOR PRODUCING SAME

(51) International classification :A61K9/48,A61K47/00,A61K47/32
(31) Priority Document No :2010043429
(32) Priority Date :26/02/2010
(33) Name of priority country :Japan
(86) International Application No :PCT/JP2011/054251
Filing Date :25/02/2011
(87) International Publication No :WO 2011/105534
(61) Patent of Addition to Application Number :NA
Filing Date :NA
(62) Divisional to Application Number :NA
Filing Date :NA

(71)**Name of Applicant :**
1)NISSHIN KASEI CO. LTD.
Address of Applicant :Fuso Doshomachi Bldg. 2F 1 7 10 Doshomachi Chuo ku Osaka shi Osaka 5410045 Japan
(72)**Name of Inventor :**
1)MORIUCHI Toshiaki
2)KOJO Akane
3)HAYASHI Yusuke
4)YOSHINO Hiroyuki

(57) Abstract :
Disclosed is a hard capsule which is excellently safe even if filled with a solvent that dissolves a poorly soluble medicament. In addition the hard capsule has a short disintegration time and exhibits excellent solubility.Specifically disclosed is a hard capsule which comprises a coating film that contains: (A) a polymer or a copolymer which is obtained by polymerizing or copolymerizing at least one kind of polymerizable vinyl monomer represented by general formula (1) in the presence of a polyvinyl alcohol and/or a derivative thereof; and (B) native gellan gum. H2C=C (R1)-COOR 2(1) (In the formula R1 represents a hydrogen atom or a methyl group; and R2 represents a hydrogen atom or an alkyl group having 1-4 carbon atoms.)

No. of Pages : 46 No. of Claims : 6

(12) PATENT APPLICATION PUBLICATION
(19) INDIA
(22) Date of filing of Application :17/09/2012
(21) Application No.8100/DELNP/2012 A
(43) Publication Date : 21/03/2014

(54) Title of the invention : APPARATUS AND METHOD FOR STABILIZING AN ELECTRICAL POWER IMPORT

(51) International classification :H02J3/14,H02J13/00
(31) Priority Document No :10 2010 017 935.3
(32) Priority Date :22/04/2010
(33) Name of priority country :Germany
(86) International Application No :PCT/EP2011/053416
Filing Date :08/03/2011
(87) International Publication No :WO 2011/131413
(61) Patent of Addition to Application Number :NA
Filing Date :NA
(62) Divisional to Application Number :NA
Filing Date :NA

(71)**Name of Applicant :**
1)SIEMENS AKTIENGESELLSCHAFT
Address of Applicant :Wittelsbacherplatz 2 80333 M¼nchen Germany
(72)**Name of Inventor :**
1)FALK Rainer
2)FRIES Steffen
3)HOF Hans Joachim

(57) Abstract :
Apparatus and method for stabilizing an electrical power import from a power distribution system (2) by means of at least one subscriber (5) which is connected to the power distribution system (2) via an electrical connection. An electrical power import anomaly when electrical power is imported by the respective subscriber (5) from the power distribution system (2) is identified using transmitted control messages which are determined for the respective subscriber (5) or originate from the respective subscriber. Once an electrical power import anomaly has been identified power consumption units (10 11) or power generation units are driven correspondingly. The apparatus according to the invention effectively protects the power distribution system (2) from third party intervention or implementation errors which can bring about an unstable system response.

No. of Pages : 36 No. of Claims : 15

(12) PATENT APPLICATION PUBLICATION
(19) INDIA
(22) Date of filing of Application :12/09/2012
(21) Application No.7970/DELNP/2012 A
(43) Publication Date : 21/03/2014

(54) Title of the invention : POSITIONING SYSTEM USING PSEUDOLITES OPERATING IN ASSISTED MODE

(51) International classification :G01S19/25,G01S19/11
(31) Priority Document No :1000998
(32) Priority Date :12/03/2010
(33) Name of priority country :France
(86) International Application No :PCT/EP2011/051542
Filing Date :03/02/2011
(87) International Publication No :WO 2011/110386
(61) Patent of Addition to Application Number :NA
Filing Date :NA
(62) Divisional to Application Number :NA
Filing Date :NA

(71)**Name of Applicant :**
1)THALES
Address of Applicant :45 rue de Villiers F 92200 Neuilly Sur Seine France
(72)**Name of Inventor :**
1)MONNERAT Michel

(57) Abstract :
The invention relates to a positioning system of an object provided with a receiver (R) which includes a set of pseudolites transmitting positioning signals and distributed in a constrained area and assistance means (S) capable of communicating with said receiver (R) and calculating the position of the object and a server (S) capable of dynamically configuring the set of pseudolites said pseudolites each further having a spreading code corresponding to that of a satellite belonging to a satellite constellation in a satellite navigation system the dynamic configuration of the pseudolites by the server being such that the spreading codes of said pseudolites correspond to spreading codes of satellites of the satellite constellation not visible (SN) to the object receiver (R) assistance means (S) broadcasting to said receiver (R) a list of spreading codes meant to be those of the satellites visible to said receiver (R) but actually corresponding to the spreading codes of the set of pseudolites so as to deceive the receiver (R) that can acquire the positioning signals transmitted by the pseudolites and communicate with the assistance means (S) so that the latter calculates the position of the object.

No. of Pages : 14 No. of Claims : 6

(12) PATENT APPLICATION PUBLICATION
(19) INDIA
(22) Date of filing of Application :12/09/2012
(21) Application No.7971/DELNP/2012 A
(43) Publication Date : 21/03/2014

(54) Title of the invention : ENANTIOMERICALLY ENRICHED AMINODIPHOSPHINES AS LIGANDS FOR THE PREPARATION OF CATALYSTS FOR ASYMMETRIC SYNTHESIS

(51) International classification :C07F9/46,C07F15/00,C07B53/00
(31) Priority Document No :10382034.6
(32) Priority Date :12/02/2010
(33) Name of priority country :EPO
(86) International Application No :PCT/EP2010/065366
Filing Date :13/10/2010
(87) International Publication No :WO 2011/098160
(61) Patent of Addition to Application Number :NA
Filing Date :NA
(62) Divisional to Application Number :NA
Filing Date :NA

(71)**Name of Applicant :**
1)ENANTIA S.L.
Address of Applicant :Parc Cientfic de Barcelona C/ Josep Samitier 1 5 E 08028 Barcelona Spain
(72)**Name of Inventor :**
1)ALONSO XALMA M³nica
2)VERDAGUER ESPAULELLA Xavier
3)REV‰S VILAPLANA Marc
4)RIERA ESCAL‰ Antoni

(57) Abstract :
The present invention relates to enantiomerically enriched aminodiphosphine ligands where the chirality is located in the phosphorus atom and their preparation process to catalysts containing them and their preparation process as well as their use in asymmetric synthesis.

No. of Pages : 49 No. of Claims : 21

(12) PATENT APPLICATION PUBLICATION
(19) INDIA
(22) Date of filing of Application :12/09/2012
(21) Application No.7972/DELNP/2012 A
(43) Publication Date : 21/03/2014

(54) Title of the invention : IAP BIR DOMAIN BINDING COMPOUNDS

(51) International classification :C07K5/062,A61K38/05,C12N9/64
(31) Priority Document No :61/303809
(32) Priority Date :12/02/2010
(33) Name of priority country :U.S.A.
(86) International Application No :PCT/IB2011/000264
Filing Date :11/02/2011
(87) International Publication No :WO 2011/098904
(61) Patent of Addition to Application Number :NA
Filing Date :NA
(62) Divisional to Application Number :NA
Filing Date :NA

(71)**Name of Applicant :**
1)PHARMASCIENCE INC.
Address of Applicant :6111 Avenue Royalmount Suite 100 Montreal Quebec H4P 2T4 Canada
(72)**Name of Inventor :**
1)LAURENT Alain
2)PROULX Melanie
3)ROSE Yannick
4)DENISSOVA Irina
5)DAIRI Kenza
6)JARVIS Scott
7)JAQUITH James B.

(57) Abstract :
A compound of Formula 1 : (I) or salt thereof as well as methods of making compounds of Formula 1 methods of using compounds of Formula 1 to treat proliferative disorders such as cancer and related compounds composition and methods.

No. of Pages : 295 No. of Claims : 34

(12) PATENT APPLICATION PUBLICATION
(19) INDIA
(22) Date of filing of Application :17/09/2012
(21) Application No.8093/DELNP/2012 A
(43) Publication Date : 21/03/2014

(54) Title of the invention : METHODS OF MAKING FABRIC SOFTENER

(51) International classification :C11D1/62,C11D3/00,C11D11/00
(31) Priority Document No :61/317,727
(32) Priority Date :26/03/2010
(33) Name of priority country :U.S.A.
(86) International Application No :PCT/US2011/029731
Filing Date :24/03/2011
(87) International Publication No :WO 2011/119796
(61) Patent of Addition to Application Number :NA
Filing Date :NA
(62) Divisional to Application Number :NA
Filing Date :NA

(71)**Name of Applicant :**
1)THE PROCTER & GAMBLE COMPANY
Address of Applicant :One Procter & Gamble Plaza Cincinnati Ohio 45202 U.S.A.
(72)**Name of Inventor :**
1)KING Darren Franklin
2)CORONA Alessandro III
3)HOPPER Eric Foster
4)GROENDYKE Brian Christopher

(57) Abstract :
Optimizing dilution processing include the use of cold dilution water yields fabric softener products of desired rheology and stability.

No. of Pages : 13 No. of Claims : 10

(12) PATENT APPLICATION PUBLICATION
(19) INDIA
(22) Date of filing of Application :17/09/2012
(21) Application No.8098/DELNP/2012 A
(43) Publication Date : 21/03/2014

(54) Title of the invention : CYLODEXTRIN COMPLEXATION METHODS FOR FORMULATING PEPTIDE PROTEASOME INHIBITORS

(51) International classification :A61K38/55
(31) Priority Document No :61/644122
(32) Priority Date :08/05/2012
(33) Name of priority country :U.S.A.
(86) International Application No :PCT/US2012/055127
Filing Date :13/09/2012
(87) International Publication No :WO 2013/169282
(61) Patent of Addition to Application Number :NA
Filing Date :NA
(62) Divisional to Application Number :NA
Filing Date :NA

(71)**Name of Applicant :**
1)ONYX THERAPEUTICS INC.
Address of Applicant :249 E. Grand Avenue San Francisco California 94080 U.S.A.
(72)**Name of Inventor :**
1)LEWIS Evan
2)SHWONEK Peter
3)DALZIEL Sean
4)JUMAA Mouhannad

(57) Abstract :
This disclosure provides methods for formulating compositions comprising one or more peptide proteasome inhibitors and a cyclodextrin particularly a substituted cyclodextrin. Such methods substantially increase the solubility and stability of these proteasome inhibitors and facilitate both their manufacture and administration. Many peptide proteasome inhibitors have been shown to have low solubility in water.

No. of Pages : 104 No. of Claims : 55

(12) PATENT APPLICATION PUBLICATION
(19) INDIA
(22) Date of filing of Application :17/09/2012
(21) Application No.8099/DELNP/2012 A
(43) Publication Date : 21/03/2014

(54) Title of the invention : COMPOSITE INSULATION MATERIAL FOR ELECTRICAL INSULATION METHOD FOR PRODUCING AND USING THE SAME

(51) International classification :H01B3/00
(31) Priority Document No :10 2010 015 398.2
(32) Priority Date :19/04/2010
(33) Name of priority country :Germany
(86) International Application No :PCT/EP2011/055816
Filing Date :13/04/2011
(87) International Publication No :WO 2011/131537
(61) Patent of Addition to Application Number :NA
Filing Date :NA
(62) Divisional to Application Number :NA
Filing Date :NA

(71)**Name of Applicant :**
1)SIEMENS AKTIENGESELLSCHAFT
Address of Applicant :Wittelsbacherplatz 2 80333 M¼nchen Germany
(72)**Name of Inventor :**
1)ALBERT Wilfried
2)GR–PPEL Peter
3)HUBER J¼rgen
4)PIECHA Gerhard
5)BLER Matthias

(57) Abstract :
A composite insulation material for electrical insulation has a resin component a hardener component and a filler powder mixture which is distributed in the composite insulation material and which has a first fraction of filler powder comprising microparticles and a second fraction of filler powder comprising nanoparticles wherein the particle distribution of the filler powder mixture is bimodal and has a proportion of 60 to 80% by weight in the composite insulation material and the second fraction of filler powder has a proportion of 0.1 to 6% by weight in the composite insulation material.

No. of Pages : 15 No. of Claims : 13

(12) PATENT APPLICATION PUBLICATION
(19) INDIA
(22) Date of filing of Application :12/09/2012
(21) Application No.7982/DELNP/2012 A
(43) Publication Date : 21/03/2014

(54) Title of the invention : SOCIAL NETWORK CONNECTIONS

(51) International classification :H04L29/08
(31) Priority Document No :PCT/EP2010/056061
(32) Priority Date :05/05/2010
(33) Name of priority country :PCT
(86) International Application No :PCT/EP2010/056061
Filing Date :05/05/2010
(87) International Publication No :WO 2011/137931
(61) Patent of Addition to Application Number :NA
Filing Date :NA
(62) Divisional to Application Number :NA
Filing Date :NA

(71)**Name of Applicant :**
1)NOKIA SIEMENS NETWORKS OY
Address of Applicant :Karaportti 3 FIN 02610 Espoo Finland
(72)**Name of Inventor :**
1)BAKOS Balazs

(57) Abstract :
The present invention relates to methods and apparatus for maintaining network connections. One or more new communication events for a first user are identified and a social graph builder (204) receives (217) data relating to the one or more new communication events wherein the data includes data relating to a second user. The social graph builder (204) modifies (218) a social network graph for the first user based on the received data if the identified one or more new communication events fulfils one or more predefined criteria.

No. of Pages : 30 No. of Claims : 13

(12) PATENT APPLICATION PUBLICATION
(19) INDIA
(22) Date of filing of Application :12/09/2012
(21) Application No.7983/DELNP/2012 A
(43) Publication Date : 21/03/2014

(54) Title of the invention : METHOD AND APPARATUS FOR INSERTING LOCATION DATA INTO MESSAGES AT A COMMUNICATION GATEWAY

(51) International classification :H04W4/02
(31) Priority Document No :12/776891
(32) Priority Date :10/05/2010
(33) Name of priority country :U.S.A.
(86) International Application No :PCT/EP2011/057181
Filing Date :05/05/2011
(87) International Publication No :WO 2011/141344
(61) Patent of Addition to Application Number :NA
Filing Date :NA
(62) Divisional to Application Number :NA
Filing Date :NA

(71)**Name of Applicant :**
1)NOKIA SIEMENS NETWORKS OY
Address of Applicant :Karaportti 3 FIN 02610 Espoo Finland
(72)**Name of Inventor :**
1)MANZANARES SANCHO Carlos
2)BOTTIGLIERI Caio
3)CORDOVA Irving Benjamin
4)GARLIKOWSKI Konrad
5)HARSWANTO Mikhael
6)SAMPLE Duncan

(57) Abstract :
The present invention relates to methods and apparatus for enabling location data for a user (110) to be included in communication messages from the user (110). A communication message is received from a mobile device (103) of the user (110) wherein the communication message is addressed to or intended for a location based service (107). A request message is transmitted for a location data of the mobile device (103) to a mobile operator (105) of the user (110). A response message is received from the mobile operator (105) wherein the response message includes the location data for the mobile device (103). The communication message is processed to include the received location data for the mobile device (103) and the processed communication message is transmitted to the location based service (107).

No. of Pages : 19 No. of Claims : 10

(12) PATENT APPLICATION PUBLICATION
(19) INDIA
(22) Date of filing of Application :17/09/2012
(21) Application No.8103/DELNP/2012 A
(43) Publication Date : 21/03/2014

(54) Title of the invention : ELECTRIC VEHICLE CONTROL DEVICE

(51) International classification :H02M7/48,B60L3/00,H02M7/487
(31) Priority Document No :2010084342
(32) Priority Date :31/03/2010
(33) Name of priority country :Japan
(86) International Application No :PCT/JP2011/058104
Filing Date :30/03/2011
(87) International Publication No :WO 2011/125784
(61) Patent of Addition to Application Number :NA
Filing Date :NA
(62) Divisional to Application Number :NA
Filing Date :NA

(71)**Name of Applicant :**
1)KABUSHIKI KAISHA TOSHIBA
Address of Applicant :1 1 Shibaura 1 chome Minato ku Tokyo 1058001 Japan
(72)**Name of Inventor :**
1)TODA Shinichi
2)YASUOKA Ikuo
3)NAKAZAWA Yosuke

(57) Abstract :
Four VVVF main circuit inverters (21) that supply electric power for driving a permanent magnet synchronization electric motor (2) are combined into one unit and a cooling mechanism for discharging to outside air heat generated from the four VVVF main circuit inverters (21) is configured as a 4 in 1 inverter unit shared by the four VVVF inverters in order for the four VVVF main circuit inverters (21) to supply electric power to the permanent magnet synchronization electric motor (2). The electric vehicle control device individually controls the inverters and makes the overall device more compact by storing in the 4 in 1 inverter unit a 2 in 1 semiconductor element device package that combines into one unit two semiconductor elements that convert electric power to enable a permanent magnet synchronization electric motor (1) to drive.

No. of Pages : 40 No. of Claims : 9

(12) PATENT APPLICATION PUBLICATION
(19) INDIA
(22) Date of filing of Application :17/09/2012
(21) Application No.8104/DELNP/2012 A
(43) Publication Date : 21/03/2014

(54) Title of the invention : PROCESS FOR THE REMOVAL OF HEAT STABLE SALTS FROM ACID GAS ABSORBENTS

(51) International classification :B01D53/14,B01J20/34
(31) Priority Document No :61/314,689
(32) Priority Date :17/03/2010
(33) Name of priority country :U.S.A.
(86) International Application No :PCT/EP2011/054051
Filing Date :17/03/2011
(87) International Publication No :WO 2011/113897
(61) Patent of Addition to Application Number :NA
Filing Date :NA
(62) Divisional to Application Number :NA
Filing Date :NA

(71)**Name of Applicant :**
1)SHELL INTERNATIONALE RESEARCH MAATSCHAPPIJ B.V.
Address of Applicant :Carel van Bylandtlaan 30 NL 2596 HR The Hague Netherlands
(72)**Name of Inventor :**
1)BHAMBHANI GODHWANI Vijay
2)SARLIS John Nicholas

(57) Abstract :
A process for the regeneration of an acid gas absorbent comprising an amine and heat stable salts by phase separation comprising a) mixing the acid gas absorbent with an alkaline solution to form a mixture with a pH above the pH equivalence point of the amine; b) cooling the mixture to a temperature below 500C; c) separating the mixture into a regenerated acid gas absorbent and a waste stream; d) collecting the regenerated acid gas absorbent separate from the waste stream.

No. of Pages : 23 No. of Claims : 15

(12) PATENT APPLICATION PUBLICATION
(19) INDIA
(22) Date of filing of Application :17/09/2012
(21) Application No.8105/DELNP/2012 A
(43) Publication Date : 21/03/2014

(54) Title of the invention : PROCESS FOR PRODUCTION OF BIODIESEL

(51) International classification :C11C1/08,C11C3/00,C10L1/02
(31) Priority Document No :10 2010 022 139.2
(32) Priority Date :20/05/2010
(33) Name of priority country :Germany
(86) International Application No :PCT/DE2011/000209
Filing Date :02/03/2011
(87) International Publication No :WO 2011/144192
(61) Patent of Addition to Application Number :NA
Filing Date :NA
(62) Divisional to Application Number :NA
Filing Date :NA

(71)**Name of Applicant :**
1)LURGI GMBH
Address of Applicant :Lurgiallee 5 60439 Frankfurt am Main Germany
(72)**Name of Inventor :**
1)SEIDEL Eckhard
2)B–NSCH Rudolf
3)PALAUSCHEK Norbert
4)SAFT Helmut

(57) Abstract :
A process for continuous production of biodiesel from vegetable oils or animal fats by transesterification with methanol or ethanol to give crude fatty acid alkyl esters subsequent washing with water in a wash column to remove water soluble impurities subsequent drying by vaporization of the water content and subsequent removal of steryl glycosides by adsorption onto calcium bentonite wherein the adsorption column(s) used is/are regenerated in a first step for desorption of the steryl glycosides by rinsing with a mixture consisting of fatty acid alkyl esters and methanol or ethanol and in a subsequent second step for removal of methanol residues by rinsing with fatty acid alkyl esters or with gaseous nitrogen or carbon dioxide.

No. of Pages : 9 No. of Claims : 10

(12) PATENT APPLICATION PUBLICATION
(19) INDIA
(22) Date of filing of Application :04/09/2012
(21) Application No.2736/DEL/2012 A
(43) Publication Date : 21/03/2014

(54) Title of the invention : METHOD FOR CONTROL OF CENTRIFUGATION

(51) International classification :D06F
(31) Priority Document No :12466006.9
(32) Priority Date :21/03/2012
(33) Name of priority country :EPO
(86) International Application No :NA
Filing Date :NA
(87) International Publication No : NA
(61) Patent of Addition to Application Number :NA
Filing Date :NA
(62) Divisional to Application Number :NA
Filing Date :NA

(71)**Name of Applicant :**
1)PRIMUS CE S.R.O.
Address of Applicant :MISTECKA 1116, 742 58 PRIBOR, CZECH REPUBLIC
(72)**Name of Inventor :**
1)ZUZANA VASICKOVA
2)PAVEL STEPAN
3)MILAN JANICEK

(57) Abstract :
Method for control of centrifugation process in a washing machine, where the first step consists in a laundry distribution in the drum of the washing machine, during which at last one measurement of unbalance of the drum is done, where during the first laundry distribution (D1) the first measurement (M1) is proceeded and subsequently, the measured unbalance value of the drum of the washing machine is compared with the predetermined intervals of the unbalance, when if the current unbalance value is within the predetermined intervals, the washing machine switches to the first spin (S1) and subsequently to the first redistribution (R1), after which the second distribution (D2) follows, or if the value is not within the predetermined intervals the washing machine switches directly to the first laundry redistribution (R1), after which also the second laundry distribution (D2) takes place, whereas during the second laundry distribution (D2) the second measurement (M2) is proceeded and subsequently the measured unbalance value is compared with the predetermined unbalance intervals when, if the actual unbalance value is within the range of the predetermined intervals the washing machine switches to the second spin (S2), subsequently the second laundry redistribution (R2) follows and subsequently the third laundry distribution (D3) follows, or if the actual unbalance value is not within the range of the predetermined interval the third measurement (M3) is done, afterwards the measured unbalance value of the washing machine is compared with the predetermined unbalance intervals, when, if the actual unbalance value is within the range of the predeterminet intervals the washing machine switches to the second spin (S2), subsequently the second laundry redistribution (R2) follows and subsequently the third laundry distribution (D3) follows, or if the value is not within the range of the predetermined interval the fourth measurement (M4) is done, subsequently the measured unbalance value of the washing machine is compared with the predetermined unbalance intervals, when, if the actual unbalance value is within the range of the predetermined intervals the washing machine switches to the second spin (S2), subsequently the second laundry redistribution (R2) follows and subsequently the third laundry distribution (D3) follows, or if the value is not within the range of the predetermined interval the washing machine switches directly to the second laundry redistribution (R2), followed by the third laundry distribution (D3), whereas during the third laundry distribution (D3) the fifth measurement (M5) is proceeded, subsequently the measured unbalance value is compared with the predetermined unbalance interval, when, if the actual unbalance value is within the range of the predetermined interval the washing machine switches to the high rotary spin (Smax), or if the actual unbalance value is not within the range of the predetermined interval the additional sixth measurement (M6) is proceeded, subsequently the measured unbalance value of the drum of the washing machine is compared with the predetermined unbalance intervals, when, if the actual unbalance value is within the range of the predetermined intervals the washing machine switches to the high speed spin (Smax), or if the value is not within the range of the predetermined intervals the seventh measurement (M7) is proceeded, subsequently measured unbalance value of the washing machine is compared with the predetermined unbalance interval, when, if the actual unbalance value is within the range of the predetermined intervals of the unbalance the washing machine switches to the high speed spin (Smax), or if the actual unbalance value is higher than the maximum allowed value of unbalance, the washing machine switches back to the second laundry redistribution (R2), and the whole process of the third distribution (D3) follows, whereas if the unbalance value of the drum of the washing machine is not decreased neither after the seventh unbalance measurement (M7) of the second performance of the third distribution (D3) follows, the washing machine changes again to the second redistribution (R2) and the whole process of the third distribution (D3), whereas if the unbalance value of the drum of the washing machine is not decreased neither after the seventh unbalance measurement (M7) of the third performance of the third distribution (D3), the washing machine changes to the low j rotary speed spin (Smin), or the washing machine changes to the washing rotary speed (OP).

No. of Pages : 17 No. of Claims : 2

(12) PATENT APPLICATION PUBLICATION
(19) INDIA
(22) Date of filing of Application :07/09/2012
(21) Application No.7841/DELNP/2012 A
(43) Publication Date : 21/03/2014

(54) Title of the invention : LARGE AREA TRANSPARENT CONDUCTIVE COATINGS INCLUDING DOPED CARBON NANOTUBES AND NANOWIRE COMPOSITES AND METHODS OF MAKING THE SAME

(51) International classification :C09D1/00
(31) Priority Document No :12/659353
(32) Priority Date :04/03/2010
(33) Name of priority country :U.S.A.
(86) International Application No :PCT/US2011/021819
Filing Date :20/01/2011
(87) International Publication No :WO 2011/109125
(61) Patent of Addition to Application Number :NA
Filing Date :NA
(62) Divisional to Application Number :NA
Filing Date :NA

(71)**Name of Applicant :**
1)GUARDIAN INDUSTRIES CORP.
Address of Applicant :2300 Harmon Road Auburn Hills MI 48326 1714 U.S.A.
(72)**Name of Inventor :**
1)VEERASAMY Vijayen S.

(57) Abstract :
Certain example embodiments of this invention relate to large area transparent conductive coatings (TCCs) including carbon nanotubes (CNTs) and nanowire composites and methods of making the same. The σdc/σopt ratio of such thim films may be improved via stable chemical doping and/or alloying of CNT based films. The doping and/or alloying may be implemented in a large area coating system e.g. on glass and/or other substrates. In certain example embodiments a CNT film may be deposited and then doped via chemical functionalization and/or alloyed with silver and/or palladium Both p type and n type dopants may be used in different embodiments of this invention. In certain example embodiments silver and/or other nanowires may be provided e.g. to further decrease sheet resistance. Certain example embodiments may provide coatings that approach meet or exceed 90% visible transmission and 90 ohms/square target metrics.

No. of Pages : 50 No. of Claims : 31

(12) PATENT APPLICATION PUBLICATION
(19) INDIA
(22) Date of filing of Application :17/09/2012
(21) Application No.8089/DELNP/2012 A
(43) Publication Date : 21/03/2014

(54) Title of the invention : REINFORCEMENT SYSTEM FOR CONCRETE STRUCTURES AND A METHOD FOR REINFORCING AN ELONGATE CONCRETE STRUCTURE

(51) International classification :E04C5/07,E04C5/04
(31) Priority Document No :20100293
(32) Priority Date :03/03/2010
(33) Name of priority country :Norway
(86) International Application No :PCT/NO2011/000069
Filing Date :01/03/2011
(87) International Publication No :WO 2011/108941
(61) Patent of Addition to Application Number :NA
Filing Date :NA
(62) Divisional to Application Number :NA
Filing Date :NA

(71)**Name of Applicant :**
1)REFORCETECH LTD.
Address of Applicant :Palmdohlen House Dooradoyle Road Limrick Ireland
(72)**Name of Inventor :**
1)STANDAL Per Cato
2)MILLER Leonard W.

(57) Abstract :
The present invention relates to a reinforcement system for concrete structures comprising a first set of reinforcement elements configured to be connected to and co functioning with a second set of reinforcement elements each of said first and second set of reinforcement elements comprises each a number of more or less uniformly shaped units intended to be tied together the first and/or second set of reinforcement elements being made of basalt or carbon fibers embedded in a suitable matrix. At least the units forming said first set of reinforcement elements are delivered to the construction site in a flat packed compact state each unit of said first reinforcement elements being configured to be stretched out into longer lengths when placed in situ and preferably being interconnected to at least several of the other units of said first reinforcement elements by means of at least one flexible or foldable more or less continuous band.

No. of Pages : 22 No. of Claims : 14

(12) PATENT APPLICATION PUBLICATION
(19) INDIA
(22) Date of filing of Application :17/09/2012
(21) Application No.8090/DELNP/2012 A
(43) Publication Date : 21/03/2014

(54) Title of the invention : FLEXIBLE PINCH FITTING FOR CONTAINERS

(51) International classification :B65D33/16
(31) Priority Document No :61/341,169
(32) Priority Date :26/03/2010
(33) Name of priority country :U.S.A.
(86) International Application No :PCT/US2011/029800
Filing Date :24/03/2011
(87) International Publication No :WO 2011/119837
(61) Patent of Addition to Application Number :NA
Filing Date :NA
(62) Divisional to Application Number :NA
Filing Date :NA

(71)**Name of Applicant :**
1)EMD MILLIPORE CORPORATION
Address of Applicant :290 Concord Road Billerica MA 01821 U.S.A.
(72)**Name of Inventor :**
1)WONG Dennis

(57) Abstract :
A device for reducing or eliminating the dead space in a fitting (30) and tubing used on a disposable container by using a flexible elastic fitting that can accommodate a pinch valve (18) or a clamp or the like closer to the flange portion (4) of the fitting. The fitting is formed of a flange and a neck portion (6) with a bore running through them. The neck may terminate in either a tubular section or a hose barb. The neck end section especially when in the form of a hose barb can be reinforced to provide a platform for attaching a tubing to it.

No. of Pages : 19 No. of Claims : 21

(12) PATENT APPLICATION PUBLICATION
(19) INDIA
(22) Date of filing of Application :17/09/2012
(21) Application No.8091/DELNP/2012 A
(43) Publication Date : 21/03/2014

(54) Title of the invention : MOLYBDATE FREE STERILIZATION COMPOSITION CONTAINING PERACETIC ACID

(51) International classification :A01N37/16,A01N25/22,A61L2/18
(31) Priority Document No :12/718,078
(32) Priority Date :05/03/2010
(33) Name of priority country :U.S.A.
(86) International Application No :PCT/US2011/023429
Filing Date :02/02/2011
(87) International Publication No :WO 2011/109136
(61) Patent of Addition to Application Number :NA
Filing Date :NA
(62) Divisional to Application Number :NA
Filing Date :NA

(71)**Name of Applicant :**
1)AMERICAN STERILIZER COMPANY
Address of Applicant :5960 Heisley Road Mentor Ohio 44060 1834 U.S.A.
(72)**Name of Inventor :**
1)FRANCISKOVICH Phillip P.
2)ROSENHAMER Donald G.
3)FIX Kathleen A.
4)DANA HALL

(57) Abstract :
A composition is disclosed which comprises (A) an anti microbial agent comprising peracetic acid; and (B) a reagent mixture comprising a buffer an anticorrosive agent and a chelator. The composition is characterized by the absence of molybdate. The foregoing composition may be dispersed in water to form a liquid sterilant. The liquid sterilant may be used for sterilizing articles such as medical dental pharmaceutical veterinary or mortuary instruments and devices, and the like.

No. of Pages : 35 No. of Claims : 27

(12) PATENT APPLICATION PUBLICATION
(19) INDIA
(22) Date of filing of Application :10/09/2012
(21) Application No.7880/DELNP/2012 A
(43) Publication Date : 21/03/2014

(54) Title of the invention : FRAME FOR A DEVICE FOR HOLDING AND REPLACING CASTING PLATES AND ASSEMBLY

(51) International classification :B22D41/24,B22D41/28,B22D41/34
(31) Priority Document No :10157129.7
(32) Priority Date :19/03/2010
(33) Name of priority country:EPO
(86) International Application No :PCT/EP2011/001324
Filing Date :17/03/2011
(87) International Publication No :WO 2011/113597
(61) Patent of Addition to Application Number :NA
Filing Date :NA
(62) Divisional to Application Number :NA
Filing Date :NA

(71)**Name of Applicant :**
1)VESUVIUS GROUP S.A.
Address of Applicant :rue de Douvrain 17 B 7011 Ghlin Belgium
(72)**Name of Inventor :**
1)COLLURA Mariano
2)SIBIET Fabrice

(57) Abstract :
The invention relates to a frame (30) for a device for holding and replacing plates for transferring molten metal contained in a metallurgical vessel having a casting channel (20) the frame defining a housing (32) for receiving and holding a plate (34) when the device is assembled in the operating position in the vicinity of the casting channel (20) of the metallurgical vessel the frame (30) being arranged to enable the introduction of the plate (34) into the housing (32) and the extraction of the plate (34) from the housing (32) by translation along a plate insertion direction the housing (32) being formed so as to have an overall planar symmetry in relation to a plane of symmetry (50) parallel with the plate insertion direction the frame (30) comprising on either side of the housing (32) in relation to the plane of symmetry (50) of said housing (32) slots for receiving thrusters (54) intended when the device is assembled to apply a force in the direction of the metallurgical vessel on a plate (34) inserted in the housing (32). The slots for receiving the thrusters (54) situated on either side of the housing (32) do not match in the planar symmetry defined by the plane of symmetry (50) of the housing (32).

No. of Pages : 22 No. of Claims : 10

(12) PATENT APPLICATION PUBLICATION
(19) INDIA
(22) Date of filing of Application :17/09/2012
(21) Application No.8117/DELNP/2012 A
(43) Publication Date : 21/03/2014

(54) Title of the invention : A SWITCH ARRANGEMENT FOR AN ELECTRICAL SWITCHGEAR

(51) International classification :H02B1/16,H02B11/12,H01H1/40
(31) Priority Document No :10002053.6
(32) Priority Date :01/03/2010
(33) Name of priority country :EPO
(86) International Application No :PCT/EP2011/000994
Filing Date :01/03/2011
(87) International Publication No :WO 2011/107255
(61) Patent of Addition to Application Number :NA
Filing Date :NA
(62) Divisional to Application Number :NA
Filing Date :NA

(71)**Name of Applicant :**
1)EATON INDUSTRIES (NETHERLANDS) B.V.
Address of Applicant :Europalaan 202 NL 7559 SC Hengelo Netherlands
(72)**Name of Inventor :**
1)LAMMERS Arend
2)BINNENDIJK Marten

(57) Abstract :
A switch arrangement (1) for an electrical switchgear (2) comprises a terminal arrangement comprising an insulating housing (3) containing a first electrical contact (5) and a second electrical contact (6) which are spaced apart along an axial direction. A breaker (4) is moveable along the axial direction in the housing to a first position. When the breaker (4) is in the first position and closed it electrically connects the first electrical contact (5) and the second electrical contact (6). The housing (3) is split into a plurality of separate sections (3a 3b) along the axial direction and wherein at least one of the electrical contacts (5) is in one of the sections (3a) and at least another of the electrical contacts (6) is in another section (3b).

No. of Pages : 24 No. of Claims : 15

(12) PATENT APPLICATION PUBLICATION
(19) INDIA
(22) Date of filing of Application :17/09/2012
(21) Application No.8118/DELNP/2012 A
(43) Publication Date : 21/03/2014

(54) Title of the invention : MOISTURE DETECTION DEVICE FOR USE WITH A DEVICE FOR MONITORING AN ACCESS TO A PATIENT

(51) International classification :A61M1/36
(31) Priority Document No :10 2010 012 545.8
(32) Priority Date :23/03/2010
(33) Name of priority country :EPO
(86) International Application No :PCT/EP2011/001435
Filing Date :23/03/2011
(87) International Publication No :WO 2011/116943
(61) Patent of Addition to Application Number :NA
Filing Date :NA
(62) Divisional to Application Number :NA
Filing Date :NA

(71)**Name of Applicant :**
1)FRESENIUS MEDICAL CARE DEUTSCHLAND GMBH
Address of Applicant :Else Krner Strasse 1 61352 Bad Homburg v.d.H. Germany
(72)**Name of Inventor :**
1)HEPPE John

(57) Abstract :
The invention relates to a moisture detection device (40) for use with a device B for monitoring an access to a patient for an apparatus with which a liquid is supplied to a patient and/or a liquid is withdrawn from the patient via a hose line in particular for an extracorporeal blood treatment device A. The moisture detection device according to the invention is designed as a planar structure which is to be placed onto the skin of the patient and which has as moisture sensor an electrically conductive structure. The device is characterized in that the planar structure is a textile planar structure composed both of non conductive warp and weft threads and also of conductive warp and weft threads (50 60). The conductive and non conductive warp and weft threads are arranged in such a way that the electrically conductive structure is created. By spatial separation of the warp and weft threads a defined electrically conductive structure is generated in the fabric. An important advantage of using both conductive warp threads and also conductive weft threads is that an electrically conductive structure can be formed that has sections extending in different directions. With such a structure a moisture sensor can be created that has particularly high sensitivity. The electrically conductive structure is preferably closed with a terminal resistance R which is preferably not part of the moisture detection device (40) but of an attachment part for the device thereby simplifying production.

No. of Pages : 67 No. of Claims : 24

(12) PATENT APPLICATION PUBLICATION
(19) INDIA
(22) Date of filing of Application :12/09/2012
(21) Application No.7989/DELNP/2012 A
(43) Publication Date : 21/03/2014

(54) Title of the invention : COMPOSITIONS AND METHODS FOR THE PRODUCTION OF L HOMOALANINE

(51) International classification :C12N9/04,C07K14/00,C07H21/00
(31) Priority Document No :61/308746
(32) Priority Date :26/02/2010
(33) Name of priority country :U.S.A.
(86) International Application No :PCT/US2011/026315
Filing Date :25/02/2011
(87) International Publication No :WO 2011/106696
(61) Patent of Addition to Application Number :NA
Filing Date :NA
(62) Divisional to Application Number :NA
Filing Date :NA

(71)**Name of Applicant :**
1)THE REGENTS OF THE UNIVERSITY OF CALIFORNIA
Address of Applicant :1111 Franklin Street 12th Floor Oakland California 94607 5200 U.S.A.
(72)**Name of Inventor :**
1)LIAO James C.
2)ZHANG Kechun
3)CHO Kwang Myung

(57) Abstract :
Healthcare costs are a significant worldwide with many patients being denied medications because of their high prices. One approach to addressing this problem involves the biosynthesis of chiral drug intermediates an environmentally friendly solution that can be used to generate pharmaceuticals at much lower costs than conventional techniques. In this context embodiments of the invention comprise methods and materials designed to allow microorganisms to biosynthesize the nonnatural amino acid L homoalanine. As is known in the art L homoalanine is a chiral precursor of a variety of pharmaceutically valuable compounds including the anticonvulsant medications levetiracetam (sold under the trade name Keppra®) and brivaracetam as well as ethambutol a bacteriostatic antimycobacterial drug used to treat tuberculosis. Consequently embodiments of the invention can be used in low cost environmentally friendly processes to generate these and other valuable compounds.

No. of Pages : 82 No. of Claims : 20

(12) PATENT APPLICATION PUBLICATION
(19) INDIA
(22) Date of filing of Application :17/09/2012
(21) Application No.8110/DELNP/2012 A
(43) Publication Date : 21/03/2014

(54) Title of the invention : METHOD AND DEVICE FOR REGULATING THE EXHAUST RETURN RATE FOR INTERNAL COMBUSTION ENGINES IN LEAN MIXTURE OPERATION

(51) International classification :F02P5/04,F02D41/00,F02D41/14
(31) Priority Document No :10 2010 003 281.6
(32) Priority Date :25/03/2010
(33) Name of priority country :Germany
(86) International Application No :PCT/EP2011/053940
Filing Date :16/03/2011
(87) International Publication No :WO 2011/117123
(61) Patent of Addition to Application Number :NA
Filing Date :NA
(62) Divisional to Application Number :NA
Filing Date :NA

(71)**Name of Applicant :**
1)ROBERT BOSCH GMBH
Address of Applicant :Postfach 30 02 20 70442 Stuttgart Germany
(72)**Name of Inventor :**
1)DAEUBEL Ralf
2)PORTEN Guido
3)AMLER Markus
4)WALZ Matthias
5)MENG Jan Mathias
6)MUELLER Uwe

(57) Abstract :
The invention relates to a method for adjusting an exhaust return rate in an engine system (1) having an internal combustion engine (2) wherein the exhaust return rate indicates the ratio of returned exhaust into a cylinder (3) of the internal combustion engine (2) to the total gas volume found in the cylinder (3) having the following steps: operating the internal combustion engine (2) according to a specification for the exhaust return rate wherein an ignition of an air fuel mixture is carried out in the cylinder at a specific ignition time; adjusting the ignition time in the cylinder (3) of the internal combustion engine (2); and correcting the specification for the exhaust return rate depending on a change in the operating behavior of the internal combustion engine (2) on the basis of the adjustment of the ignition time.

No. of Pages : 17 No. of Claims : 9

(12) PATENT APPLICATION PUBLICATION
(19) INDIA
(22) Date of filing of Application :17/09/2012
(21) Application No.8111/DELNP/2012 A
(43) Publication Date : 21/03/2014

(54) Title of the invention : METHOD AND DEVICE FOR HANDLING UNCONTROLLED COMBUSTION IN AN INTERNAL COMBUSTION ENGINE OF A MOTOR VEHICLE

(51) International classification :F02P5/152,F02D35/02,G01M15/11
(31) Priority Document No :102010003285.9
(32) Priority Date :25/03/2010
(33) Name of priority country :Germany
(86) International Application No :PCT/EP2011/053934
Filing Date :16/03/2011
(87) International Publication No :WO 2011/117122
(61) Patent of Addition to Application Number :NA
Filing Date :NA
(62) Divisional to Application Number :NA
Filing Date :NA

(71)**Name of Applicant :**
1)ROBERT BOSCH GMBH
Address of Applicant :Postfach 30 02 20 70442 Stuttgart Germany
(72)**Name of Inventor :**
1)WUERTH Juergen
2)KLUTH Carsten
3)HAEMING Werner
4)LUO Li

(57) Abstract :
The invention relates to a method for handling uncontrolled combustion in an internal combustion engine of a motor vehicle, wherein the uncontrolled combustion occurs independently of ignition by a spark plug and in or on the internal combustion engine (1). In Order to enable a rapid but nonetheless reliable reduction of uncontrolled combustion in an internal combustion engine, in order to protect the internal combustion engine from damage, according to the invention, the number of uncontrolled combustion events detected in a monitoring period is determined and compared to a threshold value (SW), wherein a temperature in a combustion Chamber (22) of the internal combustion engine (1) is lowered upon exceeding the threshold value (SW).

No. of Pages : 20 No. of Claims : 17

(12) PATENT APPLICATION PUBLICATION
(19) INDIA
(22) Date of filing of Application :17/09/2012
(21) Application No.8112/DELNP/2012 A
(43) Publication Date : 21/03/2014

(54) Title of the invention : ADAPTER FOR THE ARTICULATED CONNECTION OF A CONNECTING ELEMENT AT THE END OF A WIPER ARM TO A CONNECTOR ELEMENT OF A WIPER BLADE

(51) International classification :B60S1/40,B60S1/38
(31) Priority Document No :102010003269.7
(32) Priority Date :25/03/2010
(33) Name of priority country :Germany
(86) International Application No :PCT/EP2011/050929
Filing Date :25/01/2011
(87) International Publication No :WO 2011/116995
(61) Patent of Addition to Application Number :NA
Filing Date :NA
(62) Divisional to Application Number :NA
Filing Date :NA

(71)**Name of Applicant :**
1)ROBERT BOSCH GMBH
Address of Applicant :Postfach 30 02 20 70442 Stuttgart Germany
(72)**Name of Inventor :**
1)DEPONDT Helmut

(57) Abstract :
The invention relates to an adapter (22) for the articulated connection of a connecting element (86 102 120) at the end of a wiper arm to a connector element (18) of a wiper blade (10) in particular in the flat bar method of construction wherein the adapter (22) has a base element (24). According to the invention the base element (24) has two lateral walls (30) which at the end faces thereof facing away from the wiper arm are connected by an end cap (26) and in the region of the upper edges (64) thereof are connected to each other by a crosspiece (32) and also by a hub (34). A resilient tongue (38) extends from the crosspiece (32) to the end face on the wiper arm side and has at the free end thereof an outwardly protruding button (40). Furthermore guide profiles (50) are provided on the longitudinal edges of the lateral walls (30) facing towards the wiper strip (16).

No. of Pages : 15 No. of Claims : 11

(12) PATENT APPLICATION PUBLICATION
(19) INDIA
(22) Date of filing of Application :13/09/2012
(21) Application No.8008/DELNP/2012 A
(43) Publication Date : 21/03/2014

(54) Title of the invention : A PROCESS FOR PRODUCING PROPYLENE AND AROMATICS FROM BUTENES BY METATHESIS AND AROMATIZATION

(51) International classification :C07C11/06,C07C15/02,C07C15/04
(31) Priority Document No :12/767080
(32) Priority Date :26/04/2010
(33) Name of priority country :U.S.A.
(86) International Application No :PCT/US2011/033059
Filing Date :19/04/2011
(87) International Publication No :WO 2011/136983
(61) Patent of Addition to Application Number :NA
Filing Date :NA
(62) Divisional to Application Number :NA
Filing Date :NA

(71)**Name of Applicant :**
1)SAUDI BASIC INDUSTRIES CORPORATION
Address of Applicant :PO Box 5101 Riyadh 11422 Saudi Arabia
(72)**Name of Inventor :**
1)VAN HAL Japp W.
2)STEVENSON Scott A.
3)ALLMAN Jim
4)SULLIVAN David L.
5)CONANT Travis

(57) Abstract :
The invention is for a process for producing propylene and hexene (along with ethylene pentenes product butenes heptenes and octenes) by metathesis from butenes (iso 1 and cis and trans 2) and pentenes and then aromatizing the hexenes (along with higher olefins such as heptenes and octenes) to benzene (along with toluene xylenes ethylbenzene and styrene). Since the desired products of the metathesis reaction are propylene and hexene the feed to the metathesis reaction has a molar ratio for 1 butene:2 butene which favors production of propylene and 3 hexene with the concentration of hexenes and higher olefins in the metathesis product being up to 30 mole%. An isomerization reactor may be used to obtain the desired molar ratio of 1 butene:2 butene for the feed composition into the metathesis reactor. After the metathesis reaction of hexene and higher olefins are separated for aromatization to benzene and other aromatics.

No. of Pages : 20 No. of Claims : 17

(12) PATENT APPLICATION PUBLICATION
(19) INDIA
(22) Date of filing of Application :13/09/2012
(21) Application No.8009/DELNP/2012 A
(43) Publication Date : 21/03/2014

(54) Title of the invention : DISPENSER AND/OR CLOSURE

(51) International classification :B65D47/40,B65D25/44,B65D25/42
(31) Priority Document No :2010900905
(32) Priority Date :04/03/2010
(33) Name of priority country:Australia
(86) International Application No :PCT/AU2011/000179
Filing Date :22/02/2011
(87) International Publication No :WO 2011/106823
(61) Patent of Addition to Application Number :NA
Filing Date :NA
(62) Divisional to Application Number :NA
Filing Date :NA

(71)**Name of Applicant :**
1)ROBERTS Ronald A.
Address of Applicant :23 Camilla Circuit Blue Hills Cranbourne Victoria 3977 Australia
2)JASPERS Neno Frans Burhoven
(72)**Name of Inventor :**
1)ROBERTS Ronald A.
2)JASPERS Neno Frans Burhoven

(57) Abstract :
A spill proof pourer is described having an annular body portion for insertion into the neck of a container most suitably a wine bottle to form an inner insert for contact with the wine when pouring wine from the wine bottle. The insert extends beyond the top of the wine bottle so as to provide a lip or similar at the extreme distal or free end for contact by the wine when being poured from the wine bottle which prevents the wine from contacting the outer or end of the bottle where droplets can accumulate. The insert can take a variety of different forms and include a cylindrical membrane. The advantage of the spill proof pourer is that leakage wastage or spillage of the wine when being poured from the bottle is prevented since the insert forms a lip around the inside of the top of the bottle.

No. of Pages : 33 No. of Claims : 33

(12) PATENT APPLICATION PUBLICATION
(19) INDIA
(22) Date of filing of Application :18/09/2012
(21) Application No.8130/DELNP/2012 A
(43) Publication Date : 21/03/2014

(54) Title of the invention : METHOD OF MAKING A COATING AND A COATED ACOUSTICAL PANEL USING DEGRADED FIBERS

(51) International classification :D21J1/08,D21J1/20,E04B1/86
(31) Priority Document No :12/729,801
(32) Priority Date :23/03/2010
(33) Name of priority country :U.S.A.
(86) International Application No :PCT/US2011/028508
Filing Date :15/03/2011
(87) International Publication No :WO 2011/119371
(61) Patent of Addition to Application Number :NA
Filing Date :NA
(62) Divisional to Application Number :NA
Filing Date :NA

(71)**Name of Applicant :**
1)USG INTERIORS LLC
Address of Applicant :550 West Adams Street Chicago IL 60661 U.S.A.
(72)**Name of Inventor :**
1)ENGLERT Mark
2)LU Runhai
3)LANGDON Matthew

(57) Abstract :
An acoustical panel is made by applying a thin acoustically transparent coating to an acoustical base mat. A pulp is made from one or more fillers a fibrous filler a binder and water. A thickener solution is prepared from a thickener and water. A portion of the pulp and the thickener solution are mixed under high shear conditions to degrade the fibrous filler and form a smooth coating. The coating is applied to and distributed over a base mat and the coated base mat is then cut and dried to form a coated acoustical panel. The panel is free of visible mineral nodules on the surface of the coating. Optionally the pulp is a portion of a pulp used to make the base mat. Other embodiments include the use of recycled dust or fine particles of the acoustical panel obtained from cutting or shaping the base mat or coated panels.

No. of Pages : 23 No. of Claims : 10

(12) PATENT APPLICATION PUBLICATION
(19) INDIA
(22) Date of filing of Application :18/09/2012
(21) Application No.8131/DELNP/2012 A
(43) Publication Date : 21/03/2014

(54) Title of the invention : TRANSVERSE FLOW MOTOR/GENERATOR

(51) International classification :H02K16/04,H02K21/24
(31) Priority Document No :10 2010 046 309.4
(32) Priority Date :25/02/2010
(33) Name of priority country :Denmark
(86) International Application No :PCT/DE2011/000191
Filing Date :24/02/2011
(87) International Publication No :WO 2011/103869
(61) Patent of Addition to Application Number :NA
Filing Date :NA
(62) Divisional to Application Number :NA
Filing Date :NA

(71)**Name of Applicant :**
1)ORTLOFF Helene
Address of Applicant :Barbarossastr. 41 09112 Chemnitz Germany
(72)**Name of Inventor :**
1)ORTLOFF Peter

(57) Abstract :
The invention relates to a multiphase high power transverse flow synchronous machine with permanent magnets arranged on the rotor in the peripheral direction said magnets corresponding to the number of poles also comprising a shaft or hollow shaft so that the magnets are arranged such that a magnet ring is used in 2 phases thus saving 50% of the magnet material the flow conducting material is also saved due to the magnet concentrators. The magnetic flow materials can be used in the MIM technique as green materials and sintered materials.

No. of Pages : 12 No. of Claims : 10

(12) PATENT APPLICATION PUBLICATION
(19) INDIA
(22) Date of filing of Application :18/09/2012
(21) Application No.8133/DELNP/2012 A
(43) Publication Date : 21/03/2014

(54) Title of the invention : CONFIGURABLE MULTILINGUAL KEYBOARD

(51) International classification :G06F3/023,G06F9/44,G06F3/048
(31) Priority Document No :61/305,731
(32) Priority Date :18/02/2010
(33) Name of priority country :U.S.A.
(86) International Application No :PCT/US2011/025315
Filing Date :17/02/2011
(87) International Publication No :WO 2011/103342
(61) Patent of Addition to Application Number :NA
Filing Date :NA
(62) Divisional to Application Number :NA
Filing Date :NA

(71)**Name of Applicant :**
1)ALKAZI Sulaiman
Address of Applicant :Block 3 Street 2 House No. 33 Mishref Kuwait
2)JAFFREY Syed Kamal H.
(72)**Name of Inventor :**
1)ALKAZI Sulaiman
2)JAFFREY Syed Kamal H.

(57) Abstract :
Systems and methods for creating a configurable multi language research and application keyboard tool. A configurable keyboard system includes a font editor/generator for modifying and creating new characters a language database for storing characters of one or more alphabets a user interface for display outputs and accepting inputs from a user and a layout generator for configuring a dynamic keyboard display and displaying the keyboard display on the user interface. Characters from one or more languages may be grouped in proximity to each other on the keyboard display based on common phonetic sounds.

No. of Pages : 40 No. of Claims : 25

(12) PATENT APPLICATION PUBLICATION
(19) INDIA
(22) Date of filing of Application :18/09/2012
(21) Application No.8134/DELNP/2012 A
(43) Publication Date : 21/03/2014

(54) Title of the invention : IN WHEEL MOTOR DRIVEN DEVICE

(51) International classification :B60K7/00,B60L9/18,F16C35/077
(31) Priority Document No :2010-047812
(32) Priority Date :04/03/2010
(33) Name of priority country :Japan
(86) International Application No :PCT/JP2011/052083
Filing Date :02/02/2011
(87) International Publication No :WO 2011/108329
(61) Patent of Addition to Application Number :NA
Filing Date :NA
(62) Divisional to Application Number :NA
Filing Date :NA

(71)**Name of Applicant :**
1)NTN CORPORATION
Address of Applicant :3 17 Kyomachibori 1 chome Nishi ku Osaka shi Osaka 5500003 Japan
(72)**Name of Inventor :**
1)YAMAMOTO Tetsuya
2)MAKINO Tomoaki

(57) Abstract :
Disclosed is an in wheel motor driven device such that an external pin holding section (45) and a housing (22) in a speed reduction section (B) are held at predetermined positions at all times and that even if a large axial load is applied due to swing rapid acceleration/deceleration or the like damage to component parts such as revolving members outer peripheral engaging members a motion conversion mechanism etc. are prevented and the problem of hitting sounds generated between the housing (22) and the external pin holding section (45) is resolved. An elastic member (51) is disposed between the housing (22) and one axial end or each of both axial ends of the external pin holding section (45). As a consequence even if an axial load is input into the external pin holding section (45) it follows that due to a restoring force of the elastic member (51) the external pin holding section (45) is held at a predetermined position at all times with the result that the positional relationship with respect to the housing (22) can be correctly maintained.

No. of Pages : 49 No. of Claims : 12

(12) PATENT APPLICATION PUBLICATION
(19) INDIA
(22) Date of filing of Application :18/09/2012
(21) Application No.8135/DELNP/2012 A
(43) Publication Date : 21/03/2014

(54) Title of the invention : CHARGER CHARGING SYSTEM AND CHARGING METHOD

(51) International classification :H02J7/35,H01M10/44
(31) Priority Document No :2011-044731
(32) Priority Date :02/03/2011
(33) Name of priority country :Japan
(86) International Application No :PCT/JP2012/053278
Filing Date :13/02/2012
(87) International Publication No :WO 2012/117838
(61) Patent of Addition to Application Number :NA
Filing Date :NA
(62) Divisional to Application Number :NA
Filing Date :NA

(71)**Name of Applicant :**
1)SONY CORPORATION
Address of Applicant :1 7 1 Konan Minato ku Tokyo 1080075 Japan
(72)**Name of Inventor :**
1)OGURA Eiji

(57) Abstract :
To provide a charger that effectively uses natural energy power when there is much time until charging should be completed. [Solution] A completion time setting unit sets a completion time that is the time when the charging of a secondary battery should be completed. An output current measuring unit obtains a current output value from a natural energy power supply device. A power amount obtaining unit obtains an amount of power to be supplied until the charging of the secondary battery is completed. Based on the output value and the amount of power a prediction time calculation unit calculates as a prediction time the time when the charging of the secondary battery is completed only by natural energy power. A control unit allows the secondary battery to be charged only by the natural energy power when the prediction time is earlier than the completion time.

No. of Pages : 76 No. of Claims : 13

(12) PATENT APPLICATION PUBLICATION
(19) INDIA
(22) Date of filing of Application :18/09/2012
(21) Application No.8136/DELNP/2012 A
(43) Publication Date : 21/03/2014

(54) Title of the invention : OPTICAL VARIATION DEVICE OPTICAL ASSEMBLY AND METHOD FOR MANUFACTURING SUCH A DEVICE

(51) International classification :G02F1/1343,G02F1/29,G02B27/22
(31) Priority Document No :10 01091
(32) Priority Date :19/03/2010
(33) Name of priority country :France
(86) International Application No :PCT/FR2011/050563
Filing Date :18/03/2011
(87) International Publication No :WO 2011/114076
(61) Patent of Addition to Application Number :NA
Filing Date :NA
(62) Divisional to Application Number :NA
Filing Date :NA

(71)**Name of Applicant :**
1)EVOSENS
Address of Applicant :115 rue Claude Chappe F 29280 Plouzane France
(72)**Name of Inventor :**
1)FRAVAL Nicolas
2)DE BOUGRENET DE LA TOCNAYE Jean Louis
3)BERIER Frdric

(57) Abstract :
The invention relates to an optical variation device (10) which includes a liquid crystal element (12) having optical properties that control the propagation of light two substrate plates (14 16) arranged on either side of the liquid crystal element (12) the two substrate plates (14 16) being covered respectively with first (18) and second (20) control electrodes each electrode (18 20) having a substantially central opening (22 24) referred to as the optical aperture the device also comprising a layer (26 28) of a material arranged between the electrodes and filling the optical aperture. The material has a surface resistivity of 10 ldŽ/square to 10 GΩ/square and at least the first electrode is divided into a plurality of portions forming sub electrodes suitable for simultaneously receiving different potentials.

No. of Pages : 28 No. of Claims : 16

(12) PATENT APPLICATION PUBLICATION
(19) INDIA
(22) Date of filing of Application :13/09/2012
(21) Application No.8005/DELNP/2012 A
(43) Publication Date : 21/03/2014

(54) Title of the invention : METHOD AND SYSTEM FOR USING LIGHT PULSED SEQUENCES TO CALIBRATE AN ENCODER

(51) International classification :G06M7/00
(31) Priority Document No :61/318098
(32) Priority Date :26/03/2010
(33) Name of priority country :U.S.A.
(86) International Application No :PCT/US2011/023892
Filing Date :07/02/2011
(87) International Publication No :WO 2011/119257
(61) Patent of Addition to Application Number :NA
Filing Date :NA
(62) Divisional to Application Number :NA
Filing Date :NA

(71)**Name of Applicant :**
1)MEASUREMENT SPECIALTIES INC.
Address of Applicant :1000 Lucas Way Hampton VA 23666 U.S.A.
(72)**Name of Inventor :**
1)AMANTE Philip A.

(57) Abstract :
An encoder to be mounted to a piston meter and configured to compute a volume of distributed fluid includes a light sensor configured to detect a light sequence and output signals indicative of the light sequence to a processing device the processing device configured to determine if the light sequence is one of one or more authorized light sequences wherein the processing device enters a calibration mode if the light sequence is one of the one or more authorized light sequences.

No. of Pages : 24 No. of Claims : 22

(12) PATENT APPLICATION PUBLICATION
(19) INDIA
(22) Date of filing of Application :13/09/2012
(21) Application No.8006/DELNP/2012 A
(43) Publication Date : 21/03/2014

(54) Title of the invention : IMAGE PROCESSING DEVICE IMAGE PROCESSING METHOD AND IMAGE PROCESSING COMPUTER PROGRAM PRODUCT

(51) International classification :H04N13/02,G03B35/08
(31) Priority Document No :2011080386
(32) Priority Date :31/03/2011
(33) Name of priority country :Japan
(86) International Application No :PCT/JP2012/001818
Filing Date :15/03/2012
(87) International Publication No :WO 2012/132290
(61) Patent of Addition to Application Number :NA
Filing Date :NA
(62) Divisional to Application Number :NA
Filing Date :NA

(71)**Name of Applicant :**
1)SONY CORPORATION
Address of Applicant :1 7 1 Konan Minato ku Tokyo 1080075 Japan
(72)**Name of Inventor :**
1)KUSHIDA Hidenori

(57) Abstract :
An image processing device method and computer program product cooperate to make adjustments in detection area for image adjustment processing to when displacement adjustments have been made to a first or second imaging area. A detection area setting device sets a first detection area within a first imaging area and sets a second detection area in a second imaging area after a displacement adjustment is applied to at least one of the first imaging area and the second imaging area. The first detection area is an area used in image adjustment processing.

No. of Pages : 60 No. of Claims : 20

(12) PATENT APPLICATION PUBLICATION
(19) INDIA
(22) Date of filing of Application :18/09/2012
(21) Application No.8137/DELNP/2012 A
(43) Publication Date : 21/03/2014

(54) Title of the invention : STABLE CRYSTAL FORM OF 2 ETHYL 3 7 DIMETHYL 6 (4 (TRIFLUOROMETHOXY) PHENOXY)QUINOLINE 4 YLMETHYL CARBONATE METHOD OF MANUFACTURING SAME AND AGRICULTURAL CHEMICAL COMPOSITION CONTAINING CRYSTALS OF SAME

(51) International classification :C07D215/22,A01N47/06,A01P7/04
(31) Priority Document No :2010-037475
(32) Priority Date :23/02/2010
(33) Name of priority country :Japan
(86) International Application No :PCT/JP2011/053781
Filing Date :22/02/2011
(87) International Publication No :WO 2011/105349
(61) Patent of Addition to Application Number :NA
Filing Date :NA
(62) Divisional to Application Number :NA
Filing Date :NA

(71)**Name of Applicant :**
1)NIPPON KAYAKU CO. LTD.
Address of Applicant :11 2 Fujimi 1 chome Chiyoda ku Tokyo 1028172 Japan
2)MEIJI SEIKA PHARMA CO. LTD.
(72)**Name of Inventor :**
1)TANIGAKIUCHI Kouki
2)SEKIGUCHI Mikio
3)HOTTA Hiroki
4)SHIMANO Shizuo
5)MORIKAWA Akinori
6)YAMAMOTO Kazumi
7)NAKANISHI Nozomu
8)MINOWA Nobuto
9)WATANABE Takashi

(57) Abstract :
Disclosed is a 2-ethyl- 3, 7-dimethyl-6-(4- (trifluoromethoxy) phenoxy) quinoline-4-ylmethyl carbonate crystal with stable physicochemical properties. According to this composition a powder x ray diffraction of the 2 ethyl 3 7 dimethyl 6 (4 (trifluoromethoxy) phenoxy) quinoline 4 ylmethyl carbonate crystals displays diffraction peak patterns as shown in Figure 1.

No. of Pages : 38 No. of Claims : 7

(12) PATENT APPLICATION PUBLICATION
(19) INDIA
(22) Date of filing of Application :18/09/2012
(21) Application No.8138/DELNP/2012 A
(43) Publication Date : 21/03/2014

(54) Title of the invention : COMMUNICATION CONTROL METHOD AND SMALL OR MEDIUM SCALE BASE STATION

(51) International classification :H04W16/26,H04W16/32,H04W84/10
(31) Priority Document No :2010-070262
(32) Priority Date :25/03/2010
(33) Name of priority country :Japan
(86) International Application No :PCT/JP2011/051305
Filing Date :25/01/2011
(87) International Publication No :WO 2011/118248
(61) Patent of Addition to Application Number :NA
Filing Date :NA
(62) Divisional to Application Number :NA
Filing Date :NA

(71)**Name of Applicant :**
1)SONY CORPORATION
Address of Applicant :1 7 1 Konan Minato ku Tokyo 1080075 Japan
(72)**Name of Inventor :**
1)SAWAI Ryo

(57) Abstract :
Provided are a communication control method and a small or medium scale base station. A communication control method for use in a small or medium scale base station comprises the steps of: receiving a radio signal transmitted by a communication terminal or a large scale base station; analyzing the radio signal to acquire information of the communication terminal or large scale base station; selecting based on the information of the communication terminal or large scale base station one of a plurality of sorts of operation ranges; and communicating with the communication terminal in accordance with the selected one of the plurality of sorts of operation ranges.

No. of Pages : 42 No. of Claims : 14

(12) PATENT APPLICATION PUBLICATION
(19) INDIA
(22) Date of filing of Application :18/09/2012
(21) Application No.8139/DELNP/2012 A
(43) Publication Date : 21/03/2014

(54) Title of the invention : SILICONE (METH)ACRYLAMIDE MONOMER POLYMER OPHTHALMIC LENS AND CONTACT LENS

(51) International classification :C07F7/08,C08G77/00,C08L43/04
(31) Priority Document No :2010-061991
(32) Priority Date :18/03/2010
(33) Name of priority country :Japan
(86) International Application No :PCT/US2011/028842
Filing Date :17/03/2011
(87) International Publication No :WO 2011/116206
(61) Patent of Addition to Application Number :NA
Filing Date :NA
(62) Divisional to Application Number :NA
Filing Date :NA

(71)**Name of Applicant :**
1)JOHNSON & JOHNSON VISION CARE INC.
Address of Applicant :7500 Centurion Parkway Jacksonville 32256 U.S.A.
(72)**Name of Inventor :**
1)MAGGIO Thomas L.
2)TURNAGE Michelle Carman
3)CLARK Michael R.
4)FUJISAWA Kazuhiko
5)NAKAMURA Masataka

(57) Abstract :
The present invention relates to a silicone (meth)acrylamide monomer and this silicone (meth)acrylamide monomer is particularly suitable for use in contact lenses intraocular lenses artificial cornea and the like.

No. of Pages : 69 No. of Claims : 19

(12) PATENT APPLICATION PUBLICATION
(19) INDIA
(22) Date of filing of Application :18/09/2012
(21) Application No.8140/DELNP/2012 A
(43) Publication Date : 21/03/2014

(54) Title of the invention : METHOD FOR MANUFACTURING BRANCHED PIPE AND APPARATUS FOR MANUFACTURING BRANCHED PIPE

(51) International classification :B21D22/10,B21C37/29,B21D19/08
(31) Priority Document No :2010-171971
(32) Priority Date :30/07/2010
(33) Name of priority country :Japan
(86) International Application No :PCT/JP2011/067357
Filing Date :28/07/2011
(87) International Publication No :WO 2012/015007
(61) Patent of Addition to Application Number :NA
Filing Date :NA
(62) Divisional to Application Number :NA
Filing Date :NA

(71)**Name of Applicant :**
1)KOMATSU LTD.
Address of Applicant :2 3 6 Akasaka Minato ku Tokyo 1078414 Japan
(72)**Name of Inventor :**
1)OGURA Taiki
2)ITOU Tatsushi

(57) Abstract :
Provided is a method for manufacturing a branched pipe comprising a first bulging step for applying a pressure to an inside surface of an untreated pipe (200) using an elastic body (81) whereby an opening along a circumferential direction (C) is formed at a distal end part of a bulging section (300) while the bulging section (300) is caused to bulge out from the trunk (250) of the untreated pipe (200); and a second bulging step for applying a pressure to the inside surface of the element pipe (200) using the elastic body (81) whereby the bulging section (300) is caused to bulge out from the trunk (250).

No. of Pages : 54 No. of Claims : 16

(12) PATENT APPLICATION PUBLICATION
(19) INDIA
(22) Date of filing of Application :18/09/2012
(21) Application No.8142/DELNP/2012 A
(43) Publication Date : 21/03/2014

(54) Title of the invention : ANTIFOULING COATING COMPOSITION AND USE FOR SAME

(51) International classification :C09D133/00,A01K61/00,A01K75/00
(31) Priority Document No :2010-065965
(32) Priority Date :23/03/2010
(33) Name of priority country :Japan
(86) International Application No :PCT/JP2011/056571
Filing Date :18/03/2011
(87) International Publication No :WO 2011/118526
(61) Patent of Addition to Application Number :NA
Filing Date :NA
(62) Divisional to Application Number :NA
Filing Date :NA

(71)**Name of Applicant :**
1)CHUGOKU MARINE PAINTS LTD.
Address of Applicant :1 7 Meijishinkai Otake shi Hiroshima 7390652 Japan
(72)**Name of Inventor :**
1)MASUDA Satoshi
2)HAYASHI Yusuke
3)KOZONO Yukio

(57) Abstract :
Disclosed is an antifouling coating composition for forming an antifouling coating that has a stable level of coating fatigue on ships underwater structures and the like and which has excellent antifouling properties over the long term. The antifouling coating composition comprises a hydrolyzable copolymer (A) and an antifouling agent (B). The aforementioned hydrolyzable copolymer (A) is a metal salt bond containing copolymer etc. that has a component unit derived from a monomer (a21) represented by a general formula (II): CH = C(R) COO M O CO C(R) = CH ¦ (II) (wherein M represents zinc or copper and R represents a hydrogen atom or a methyl group) and also has a component unit derived from another unsaturated monomer (a22) that is capable of copolymerization with the aforementioned monomer (a21). The aforementioned antifouling agent (B) at least contains medetomidine.

No. of Pages : 70 No. of Claims : 19

(12) PATENT APPLICATION PUBLICATION
(19) INDIA
(22) Date of filing of Application :18/09/2012
(21) Application No.8143/DELNP/2012 A
(43) Publication Date : 21/03/2014

(54) Title of the invention : FILTER SYSTEM IN PARTICULAR FOR VISCOSE FILTRATION

(51) International classification :B01D29/23,B01D29/68
(31) Priority Document No :10 2010 013 507.0
(32) Priority Date :31/03/2010
(33) Name of priority country :Germany
(86) International Application No :PCT/EP2011/001563
Filing Date :29/03/2011
(87) International Publication No :WO 2011/124343
(61) Patent of Addition to Application Number :NA
Filing Date :NA
(62) Divisional to Application Number :NA
Filing Date :NA

(71)**Name of Applicant :**
1)GKN SINTER METALS HOLDING GMBH
Address of Applicant :Krebsge 10 42477 Radevormwald Germany
(72)**Name of Inventor :**
1)M„HLIG Enrico
2)ST–CKER Dirk
3)LUBITZ Bernd

(57) Abstract :
The invention relates to a filter having a layer which is permeable to a medium to be filtered comprising at least one nonwoven part wherein the nonwoven part withstands higher mechanical loads. According to the invention the layer comprises in addition to the nonwoven part at least one sheet like support part connected to at least one sub region of at least one side of the nonwoven part.

No. of Pages : 20 No. of Claims : 14

(12) PATENT APPLICATION PUBLICATION
(19) INDIA
(22) Date of filing of Application :18/09/2012
(21) Application No.8144/DELNP/2012 A
(43) Publication Date : 21/03/2014

(54) Title of the invention : COAL DISTILLED GAS HOT TREATMENT FACILITY AND COKE OVEN GAS HOT TREATMENT FACILITY

(51) International classification :C10B27/00,C10B27/06
(31) Priority Document No :2010-082294
(32) Priority Date :31/03/2010
(33) Name of priority country :Japan
(86) International Application No :PCT/JP2011/057947
Filing Date :30/03/2011
(87) International Publication No :WO 2011/125696
(61) Patent of Addition to Application Number :NA
Filing Date :NA
(62) Divisional to Application Number :NA
Filing Date :NA

(71)**Name of Applicant :**
1)NIPPON STEEL & SUMITOMO MATAL CORPORATION
Address of Applicant :6 1 Marunouchi 2 chome Chiyoda ku Tokyo 1008071 , JAPAN
(72)**Name of Inventor :**
1)ITO Nobuaki
2)SUZUKI Kimihito
3)FUJIMOTO Kenichiro

(57) Abstract :
Provided is a coal distilled gas hot treatment facility that distills carbon containing solids by heat treating coal distilled gas steam extracted from a plurality of coal distilling devices at an inflow temperature of 700°C to 1200°C and comprises: a gas extraction pipe provided to each of the coal distilling devices; a non return valve provided to each of the gas extraction pipes; a collection pipe connected by the gas extraction pipes; and a coal distilled gas treatment device connected to the collection pipe. The gas extraction pipes the non return valves the collection pipe and the coal distilled gas treatment device are provided in an atmosphere that has been heated to a temperature of 700°C to 1200°C and the coal distilled gas flows through the coal distilling devices the gas extraction pipes the non return valves the collection pipe and the coal distilled gas treatment device in that order.

No. of Pages : 39 No. of Claims : 4

(12) PATENT APPLICATION PUBLICATION
(19) INDIA
(22) Date of filing of Application :18/09/2012
(21) Application No.8145/DELNP/2012 A
(43) Publication Date : 21/03/2014

(54) Title of the invention : ELECTRIC MOTOR FOR CONSTRUCTION MACHINERY AND COOLING CIRCUIT FOR ELECTRIC MOTOR

(51) International classification :H02K9/19,H02K5/20,H02K9/26
(31) Priority Document No :2010-139391
(32) Priority Date :18/06/2010
(33) Name of priority country :Japan
(86) International Application No :PCT/JP2011/062973
Filing Date :06/06/2011
(87) International Publication No:WO 2011/158685
(61) Patent of Addition to Application Number :NA
Filing Date :NA
(62) Divisional to Application Number :NA
Filing Date :NA

(71)**Name of Applicant :**
1)KOMATSU LTD.
Address of Applicant :2 3 6 Akasaka Minato ku Tokyo 1078414 Japan
(72)**Name of Inventor :**
1)MATSUKI Yasuhiko
2)MINAGAWA Masanori

(57) Abstract :
A cooling circuit (2) for an electric motor (1) for construction machinery is provided with: a circulation passage (22) which includes a shaft side passage provided on a rotor shaft in the electric motor (1); a pump (21) which provides cooling liquid to the circulation passage; a first filter (24) which is provided between the pump (21) and the shaft side passage in the circulation passage (22); a first by pass passage (25) which by passes the upstream side and the downstream side of the first filter (24); and a first relief valve (26) which is provided in the first by pass passage (25).

No. of Pages : 30 No. of Claims : 10

(12) PATENT APPLICATION PUBLICATION
(19) INDIA
(22) Date of filing of Application :18/09/2012
(21) Application No.8146/DELNP/2012 A
(43) Publication Date : 21/03/2014

(54) Title of the invention : SENSORLESS TORSIONAL MODE DAMPING SYSTEM AND METHOD

(51) International classification :H02P21/13,H02P21/14,H02P21/05
(31) Priority Document No :CO2010A000013
(32) Priority Date :01/04/2010
(33) Name of priority country :Italy
(86) International Application No :PCT/EP2011/054964
Filing Date :30/03/2011
(87) International Publication No :WO 2011/121050
(61) Patent of Addition to Application Number :NA
Filing Date :NA
(62) Divisional to Application Number :NA
Filing Date :NA

(71)**Name of Applicant :**
1)NUOVO PIGNONE S.P.A.
Address of Applicant :Via Felice Matteucci 2 I 50127 Florence Italy
(72)**Name of Inventor :**
1)SCHRAMM Simon Herbert
2)HUBER Johannes
3)SIHLER Christof Martin
4)DE FRANCISCIS Sergio

(57) Abstract :
A torsional mode damping controller system is connected to a converter that drives an electrical machine mechanically connected to a train. The controller system includes an input interface configured to receive measured data related to variables of the converter or the electrical machine and a controller connected to the input interface. The controller calculates at least one dynamic torque component along a section of a shaft of the train based on the data from the input interface generates control data for the converter for damping a torsional oscillation in the mechanical drive train based on the at least one dynamic torque component and sends the control data to the converter for modulating an active power exchanged between the converter and the electrical machine.

No. of Pages : 30 No. of Claims : 10

(12) PATENT APPLICATION PUBLICATION
(19) INDIA
(22) Date of filing of Application :10/09/2012
(21) Application No.7909/DELNP/2012 A
(43) Publication Date : 21/03/2014

(54) Title of the invention : universal virus-like particle (vlp) influenza vaccines

(51) International classification :A61K 39/145
(31) Priority Document No :61/305,759
(32) Priority Date :18/02/2010
(33) Name of priority country :U.S.A.
(86) International Application No :PCT/US2011/000300
Filing Date :18/02/2011
(87) International Publication No : NA
(61) Patent of Addition to Application Number :NA
Filing Date :NA
(62) Divisional to Application Number :NA
Filing Date :NA

(71)**Name of Applicant :**
1)TECHNOVAX INC.
Address of Applicant :765 Old Saw Mill River Road Tarrytown New York 10591 United States of America.
(72)**Name of Inventor :**
1)Jose GALARZA
2)George R. MARTIN

(57) Abstract :
Described herein are influenza virus-like particles (VLPs) that display one or more truncated re-engineered or remodeled HA molecules on their surface. Also described are methods of making and using these VLPs.

No. of Pages : 72 No. of Claims : 16

(12) PATENT APPLICATION PUBLICATION
(19) INDIA
(22) Date of filing of Application :13/09/2012
(21) Application No.8021/DELNP/2012 A
(43) Publication Date : 21/03/2014

(54) Title of the invention : POLYMER COMPOSITION FOR W&C APPLICATION WITH ADVANTAGEOUS ELECTRICAL PROPERTIES

(51) International classification :H01B3/44
(31) Priority Document No :10156722.0
(32) Priority Date :17/03/2010
(33) Name of priority country :EPO
(86) International Application No :PCT/EP2011/052988
Filing Date :01/03/2011
(87) International Publication No :WO 2011/113685
(61) Patent of Addition to Application Number :NA
Filing Date :NA
(62) Divisional to Application Number :NA
Filing Date :NA

(71)**Name of Applicant :**
1)BOREALIS AG
Address of Applicant :Wagramer Strasse 17 19 A 1220 Vienna Austria
(72)**Name of Inventor :**
1)ENGLUND Villgot
2)HAGSTRAND Per Ola
3)NILSSON Ulf
4)SMEDBERG Annika
5)BOSTR–M Jan Ove
6)FARKAS Andreas
7)DOMINGUEZ Gustavo

(57) Abstract :
The invention relates to a use of a polymer composition with improved DC electrical properties in a power cable layer and to a cable surrounded by at least one layer comprising the polymer composition.

No. of Pages : 58 No. of Claims : 17

(12) PATENT APPLICATION PUBLICATION
(19) INDIA
(22) Date of filing of Application :13/09/2012
(21) Application No.8022/DELNP/2012 A
(43) Publication Date : 21/03/2014

(54) Title of the invention : POLYMER COMPOSITION FOR W&C APPLICATION WITH ADVANTAGEOUS ELECTRICAL PROPERTIES

(51) International classification :C08L23/06,H01B3/44
(31) Priority Document No :10156721.2
(32) Priority Date :17/03/2010
(33) Name of priority country :EPO
(86) International Application No :PCT/EP2011/052990
Filing Date :01/03/2011
(87) International Publication No :WO 2011/113686
(61) Patent of Addition to Application Number :NA
Filing Date :NA
(62) Divisional to Application Number :NA
Filing Date :NA

(71)**Name of Applicant :**
1)BOREALIS AG
Address of Applicant :Wagramer Strasse 17 19 A 1220 Vienna Austria
(72)**Name of Inventor :**
1)NILSSON Ulf
2)HAGSTRAND Per Ola
3)ENGLUND Villgot
4)FARKAS Andreas
5)RITUMS Janis

(57) Abstract :
The invention relates to a polymer composition with improved DC electrical properties to the use of the composition for producing a cable layer and to a cable surrounded by at least one layer comprising the polymer composition.

No. of Pages : 59 No. of Claims : 19

(12) PATENT APPLICATION PUBLICATION
(19) INDIA
(22) Date of filing of Application :18/09/2012
(21) Application No.8152/DELNP/2012 A
(43) Publication Date : 21/03/2014

(54) Title of the invention : PACKAGING INCLUDING PHASE CHANGE MATERIALS

(51) International classification :B65D75/00,B65D81/38
(31) Priority Document No :61/314,706
(32) Priority Date :17/03/2010
(33) Name of priority country :U.S.A.
(86) International Application No :PCT/US2011/028643
Filing Date :16/03/2011
(87) International Publication No :WO 2011/116076
(61) Patent of Addition to Application Number :NA
Filing Date :NA
(62) Divisional to Application Number :NA
Filing Date :NA

(71)**Name of Applicant :**
1)NESTEC S.A.
Address of Applicant :Avenue Nestle 55 CH 1800 Vevey Switzerland
(72)**Name of Inventor :**
1)SHULMAN Michael Nathan

(57) Abstract :
The present disclosure relates to packaging and storage assemblies having phase change materials and methods of using the packaging and storage assemblies. In a general embodiment the present disclosure provides a packaging including a temperature barrier layer having one or more phase change materials. The phase change material can be stored within the temperature barrier layer.

No. of Pages : 31 No. of Claims : 26

(12) PATENT APPLICATION PUBLICATION
(19) INDIA
(22) Date of filing of Application :18/09/2012
(21) Application No.8153/DELNP/2012 A
(43) Publication Date : 21/03/2014

(54) Title of the invention : A METHOD FOR CONTROLLING OF A FILTRATION RATE CONTROLLER AND DEVICES

(51) International classification :A61M1/16
(31) Priority Document No :10004270.4
(32) Priority Date :22/04/2010
(33) Name of priority country :EPO
(86) International Application No :PCT/EP2011/001913
Filing Date :15/04/2011
(87) International Publication No :WO 2011/131319
(61) Patent of Addition to Application Number :NA
Filing Date :NA
(62) Divisional to Application Number :NA
Filing Date :NA

(71)**Name of Applicant :**
1)FRESENIUS MEDICAL CARE DEUTSCHLAND GMBH
Address of Applicant :Else Krner Strasse 1 61352 Bad Homburg Germany
(72)**Name of Inventor :**
1)CHAMNEY Paul
2)MOISSL, ULRICH
3)WABEL Peter
4)WIESKOTTEN Sebastian

(57) Abstract :
The present invention relates to a method for controlling of a filtration rate during treatment of a body fluid particularly during haemofiltration or dialysis of a patient by means of a respective device comprising the steps of defining a target relation or a development during dialysis thereof between one or more calculated or measured value(s) reflecting the mass or the concentration or the volume of a substance comprised by a tissue or a bodily fluid of the patient and one or more calculated or measured value(s) reflecting a distribution space of the patient or an approximation thereof; during dialysis repeatedly calculating or measuring of value(s) reflecting the mass or the concentration or the volume of the substance and/or reflecting the distribution space or an approximation thereof and determining the relation there between at least once; and controlling the filtration rate of the body fluid treatment device such that the determined relation is or approaches the target relation or aims to do or be so. It also relates to a controller an apparatus a device a digital storage means a computer program product and a computer program.

No. of Pages : 46 No. of Claims : 22

(12) PATENT APPLICATION PUBLICATION
(19) INDIA
(22) Date of filing of Application :18/09/2012
(21) Application No.8154/DELNP/2012 A
(43) Publication Date : 21/03/2014

(54) Title of the invention : GENE SWITCH COMPOSITIONS AND METHODS OF USE

(51) International classification :A01H5/00,C12N15/82
(31) Priority Document No :61/327,172
(32) Priority Date :23/04/2010
(33) Name of priority country :U.S.A.
(86) International Application No :PCT/US2011/032454
Filing Date :14/04/2011
(87) International Publication No :WO 2011/133387
(61) Patent of Addition to Application Number :NA
Filing Date :NA
(62) Divisional to Application Number :NA
Filing Date :NA

(71)**Name of Applicant :**
1)PIONEER HI BRED INTERNATIONAL INC.
Address of Applicant :7250 NW 62nd Avenue Johnston IA 50131 U.S.A.
2)E.I. DU PONT DE NEMOURS AND COMPANY
(72)**Name of Inventor :**
1)FANG Jin
2)GORDON KAMM William J.
3)LOWE Keith S.
4)MCBRIDE Kevin E.
5)MCGONIGLE Brian
6)SIMMONS Carl

(57) Abstract :
Compositions and methods relating to the use of sulfonylurea mediated control of gene expression are provided. Compositions include sulfonylurea responsive chemical switches wherein the gene expression is regulated by a sulfonylurea compound. Compositions also include polynucleotides encoding the polypeptides as well as constructs vectors prokaryotic and eukaryotic cells and eukaryotic organisms including plants and seeds comprising the polynucleotide and/or produced by the methods. Also provided are methods to regulate expression of a polynucleotide of interest in a cell or organism and methods to modify a genome including in a plant or plant cell.

No. of Pages : 785 No. of Claims : 32

(12) PATENT APPLICATION PUBLICATION
(19) INDIA
(22) Date of filing of Application :10/09/2012
(21) Application No.7906/DELNP/2012 A
(43) Publication Date : 21/03/2014

(54) Title of the invention : BUILDING AUTOMATION SYSTEM

(51) International classification :G05B15/02,G08C17/02
(31) Priority Document No :10 2010 015 509.8
(32) Priority Date :20/04/2010
(33) Name of priority country :Germany
(86) International Application No :PCT/DE2011/000432
Filing Date :20/04/2011
(87) International Publication No :WO 2011/131170
(61) Patent of Addition to Application Number :NA
Filing Date :NA
(62) Divisional to Application Number :NA
Filing Date :NA

(71)**Name of Applicant :**
1)GIRA GIERSIEPEN GMBH & CO. KG
Address of Applicant :Dahlienstrasse 12 42477 Radevormwald Germany
(72)**Name of Inventor :**
1)KEMMANN Harald
2)SEIFERT Roland

(57) Abstract :
The invention relates to a building automation system consisting of a portable or handheld apparatus for building up information in a situation related manner and at least one stationary unit in which the system apparatus has a proximity sensor a communication unit for wirelessly communicating with at least one of the stationary units an evaluation and control unit with at least one processor or logic unit and a memory an information output unit and an energy store wherein the system is designed to establish a wireless communication link between the apparatus and at least one of the stationary units via the communication unit on account of the apparatus approaching at least one stationary unit as determined by the proximity sensor and to display a state of the at least one stationary unit via the information output unit.

No. of Pages : 56 No. of Claims : 24

(12) PATENT APPLICATION PUBLICATION
(19) INDIA
(22) Date of filing of Application :10/09/2012
(21) Application No.7907/DELNP/2012 A
(43) Publication Date : 21/03/2014

(54) Title of the invention : ASSEMBLY AND METHOD FOR REDUCING NITROGEN OXIDES CARBON MONOXIDE AND HYDROCARBONS IN EXHAUSTS OF INTERNAL COMBUSTION ENGINES

(51) International classification :F01N3/00
(31) Priority Document No :61/343,392
(32) Priority Date :28/04/2010
(33) Name of priority country :U.S.A.
(86) International Application No :PCT/US2010/002853
Filing Date :28/10/2010
(87) International Publication No :WO 2011/136756
(61) Patent of Addition to Application Number :NA
Filing Date :NA
(62) Divisional to Application Number :NA
Filing Date :NA

(71)**Name of Applicant :**
1)TECOGEN INC.
Address of Applicant :45 First Avenue Waltham MA 02451 U.S.A.
(72)**Name of Inventor :**
1)GEHRET Joseph B.
2)PANORA Robert A.
3)ROSER Ranson

(57) Abstract :
An assembly and method for reducing nitrogen oxides carbon monoxide and hydrocarbons in exhausts of internal combustion engines wherein the exhaust is acted upon in a first stage catalytic converter. A first portion of the first stage catalytic converter output is cooled and a second portion of the catalytic converter output is not cooled. The cooled and not cooled exhausts are united and directed to a second stage catalytic converter. Air is injected into a selected one of (1) the not cooled exhaust prior to the juncture thereof with the cooled exhaust and (2) the combined cooled and not cooled exhausts after the juncture thereof.

No. of Pages : 49 No. of Claims : 23

(12) PATENT APPLICATION PUBLICATION
(19) INDIA
(22) Date of filing of Application :10/09/2012
(21) Application No.7908/DELNP/2012 A
(43) Publication Date : 21/03/2014

(54) Title of the invention : A FLUID PHARMACEUTICAL FORMULATION

(51) International classification :A61K 9/127
(31) Priority Document No :60/567,921
(32) Priority Date :03/05/2004
(33) Name of priority country :U.S.A.
(86) International Application No :PCT/US2005/015349
Filing Date :02/05/2005
(87) International Publication No :WO 2005/107712
(61) Patent of Addition to Application Number :NA
Filing Date :NA
(62) Divisional to Application Number :7275/DELNP/2006
Filed on :01/12/2006

(71)**Name of Applicant :**
1)HERMES BIOSCIENCES, INC.
Address of Applicant :61 AIRPORT BOULEVARD, SUITE B, SOUTH SAN FRANCISCO, CALIFORNIA 94080, U.S.A.
(72)**Name of Inventor :**
1)HONG, KEELUNG
2)DRUMMOND, DARYL C.
3)KIRPOTIN, DMITRI, B.

(57) Abstract :
A fluid pharmaceutical formulation comprising a liposome in an aqueous medium, the liposome having an aqueous interior space separated from the medium by a membrane comprising one or more lipids, the aqueous interior space comprising a polyanion that is a polyanionized polyol or a polyanionized monosaccharide or disaccharide and a cation that is a cationic antineoplastic therapeutic entity wherein: the liposome lipid and the cationic antineoplastic therapeutic entity are present at an entity to lipid molar ratio of at least 0.1; the formulation has in vivo anti-neoplastic activity at least a four-fold higher than the anti-neoplastic activity of the entity in a free non-liposomal form; and toxicity of the formulation administered to a mouse is equal to or less than toxicity, of the entity administered to a mouse in a free non-liposomal form.

No. of Pages : 153 No. of Claims : 23

(12) PATENT APPLICATION PUBLICATION
(19) INDIA
(22) Date of filing of Application :18/09/2012
(21) Application No.8162/DELNP/2012 A
(43) Publication Date : 21/03/2014

(54) Title of the invention : RETRACTABLE STOP FOR LOW OVERHEAD ELEVATORS

(51) International classification :B66B1/24,B66B5/00,B66B11/02
(31) Priority Document No :NA
(32) Priority Date :NA
(33) Name of priority country :NA
(86) International Application No :PCT/IB2010/001056
Filing Date :12/04/2010
(87) International Publication No :WO 2011/128718
(61) Patent of Addition to Application Number :NA
Filing Date :NA
(62) Divisional to Application Number :NA
Filing Date :NA

(71)**Name of Applicant :**
1)OTIS ELEVATOR COMPANY
Address of Applicant :Ten Farm Springs Farmington CT 06032 U.S.A.
(72)**Name of Inventor :**
1)GUILLOT Nicolas
2)FAUCONNET Aurlien

(57) Abstract :
A retractable stop (20) and the method of use thereof to control travel range of an elevator system are disclosed. The retractable stop (20) may include a vertical mounting bracket (21) an impact plate (30) and a support member (40). The support member (40) may include an upper end (41) pivotably connected to a distal portion (32) of the impact plate (30) and a lower end (42) movable in relation to the mounting bracket (21). The proximal portion (31) of the impact plate (30) may be pivotably connected to the mounting bracket (21). When the retractable stop is in a retracted position the impact plate (30) does not significantly contribute to the lateral profile of the retractable stop.

No. of Pages : 28 No. of Claims : 20

(12) PATENT APPLICATION PUBLICATION
(19) INDIA
(22) Date of filing of Application :14/09/2012
(21) Application No.8053/DELNP/2012 A
(43) Publication Date : 21/03/2014

(54) Title of the invention : AFFINITY PEPTIDES TOWARD BMP 2

(51) International classification :C07K7/00,A61K51/08
(31) Priority Document No :61/314239
(32) Priority Date :16/03/2010
(33) Name of priority country :U.S.A.
(86) International Application No :PCT/US2011/027904
Filing Date :10/03/2011
(87) International Publication No :WO 2011/115812
(61) Patent of Addition to Application Number :NA
Filing Date :NA
(62) Divisional to Application Number :NA
Filing Date :NA

(71)**Name of Applicant :**
1)ADVANCED TECHNOLOGIES AND REGENERATIVE MEDICINE LLC
Address of Applicant :325 Paramount Drive Raynham MA 02767 U.S.A.
(72)**Name of Inventor :**
1)KEHOE John
2)SALICK Daphne A.
3)FANG Carrie H.
4)YANG Chunlin
5)CREASEY Abla

(57) Abstract :
We have disclosed affinity peptides toward BMP 2. More specifically we have disclosed an affinity biomatrix where the affinity peptide is covalently attached to a biocompatible biodegradable polymer. The affinity biomatrix is useful in preparing controlled release devices for BMP 2.

No. of Pages : 46 No. of Claims : 10

(12) PATENT APPLICATION PUBLICATION
(19) INDIA
(22) Date of filing of Application :14/09/2012
(21) Application No.8054/DELNP/2012 A
(43) Publication Date : 21/03/2014

(54) Title of the invention : ARYLFLUOROPHOSPHATE INHIBITORS OF INTESTINAL APICAL MEMBRANE SODIUM/PHOSPHATE CO TRANSPORT

(51) International classification :C07F9/14,C07F9/20,C07F9/26
(31) Priority Document No :61/310902
(32) Priority Date :05/03/2010
(33) Name of priority country :U.S.A.
(86) International Application No :PCT/US2011/027232
Filing Date :04/03/2011
(87) International Publication No :WO 2011/109731
(61) Patent of Addition to Application Number :NA
Filing Date :NA
(62) Divisional to Application Number :NA
Filing Date :NA

(71)**Name of Applicant :**
1)DUOPHOS
Address of Applicant :301 Briarmeadow Avenue Firendswood TX 77546 U.S.A.
(72)**Name of Inventor :**
1)PEERCE Brian
2)SLOMOWITZ Larry

(57) Abstract :
The present invention is directed to fluorophosphates and pharmaceutical compositions thereof which are inhibitors of intestinal apical sodium/phosphate co transport and are useful in the treatment of hyperphosphatemia in reducing blood phosphate levels and in treating hypertension.

No. of Pages : 32 No. of Claims : 35

(12) PATENT APPLICATION PUBLICATION
(19) INDIA
(22) Date of filing of Application :14/09/2012
(21) Application No.8055/DELNP/2012 A
(43) Publication Date : 21/03/2014

(54) Title of the invention : WATER RETENTION AGENT FOR CEMENTITIOUS COMPOSITIONS AND CEMENTITIOUS COMPOSITIONS CONTAINING SAME

(51) International classification :C04B24/38,C04B28/02
(31) Priority Document No :10/51,814
(32) Priority Date :15/03/2010
(33) Name of priority country :France
(86) International Application No :PCT/FR2011/050405
Filing Date :28/02/2011
(87) International Publication No :WO 2011/114037
(61) Patent of Addition to Application Number :NA
Filing Date :NA
(62) Divisional to Application Number :NA
Filing Date :NA

(71)**Name of Applicant :**
1)CIMENTS FRANCAIS
Address of Applicant :5 Place de la Pyramide Tour Ariane Quartier Villon F 92800 Puteaux France
(72)**Name of Inventor :**
1)FABBRIS Faber

(57) Abstract :
The invention relates to a water retention agent for a cementitious composition characterised in that it takes the form of a liquid aqueous suspension of at least one polysaccharide at a mass concentration of between 15 and 30 % in an aqueous solution of a strong base salt excluding ammonium salts with an anionic strength of between 1.25 mol/L and 15 mol/L having a pH greater than 9 and containing an attapulgite in micronised form and at least one non phyllitic mineral powder referred to hereafter as filler which is chemically inert in said aqueous suspension and which has a grain size of between 0.1 and 100 micrometres said aqueous suspension being stable at least in a temperature range of between 5°C and 30°C. The invention also relates to the use of said agent for increasing both the viscosity and the water retention capacity of cementitious compositions without affecting the spreading ability thereof.

No. of Pages : 33 No. of Claims : 13

(12) PATENT APPLICATION PUBLICATION
(19) INDIA
(22) Date of filing of Application :19/09/2012
(21) Application No.8176/DELNP/2012 A
(43) Publication Date : 21/03/2014

(54) Title of the invention : COMPOSITION OF PIGMENTS SOLUBLE IN WATER AND/OR IN ORGANIC SOLVENTS

(51) International classification :C09D5/03,C09D17/00,C08J3/00
(31) Priority Document No :10154194.4
(32) Priority Date :22/02/2010
(33) Name of priority country :EPO
(86) International Application No :PCT/EP2011/052264
Filing Date :16/02/2011
(87) International Publication No:WO 2011/101364
(61) Patent of Addition to Application Number :NA
Filing Date :NA
(62) Divisional to Application Number :NA
Filing Date :NA

(71)**Name of Applicant :**
1)INXEL TRADEMARK & PATENTS SAGL
Address of Applicant :Viale Carlo Cattaneo 1 CH 6901 Lugano Switzerland
(72)**Name of Inventor :**
1)BROGGI Giovanni

(57) Abstract :
A composition of pigments is described said composition consisting of: (a) at least one inorganic and/or organic pigment; and (b) at least one dispersing agent; and at least one component selected from: (c) solubilization accelerating agents; (d) inorganic fillers; (e) binding agents; (f) acrylic aldehyde and/or ketone resins; (g) rheological agents; (h) anti foaming agents. This composition is preferably in the form of tablets and has the following advantages compared to the compositions known in the art: pigmentation of the paints in an eco compatible manner; universal compatibility with the various painting systems; extremely short duration of the paint pigmentation process; easy transportation and dosage; low cost paint pigmentation process; simple and low cost production process.

No. of Pages : 26 No. of Claims : 21

(12) PATENT APPLICATION PUBLICATION
(19) INDIA
(22) Date of filing of Application :19/09/2012
(21) Application No.8177/DELNP/2012 A
(43) Publication Date : 21/03/2014

(54) Title of the invention : BLAST RESISTANT SAFE

(51) International classification :E05G1/00,E05G1/04,E06B5/12
(31) Priority Document No :2010900893
(32) Priority Date :03/03/2010
(33) Name of priority country :Australia
(86) International Application No :PCT/AU2011/000241
Filing Date :03/03/2011
(87) International Publication No :WO 2011/106844
(61) Patent of Addition to Application Number :NA
Filing Date :NA
(62) Divisional to Application Number :NA
Filing Date :NA

(71)**Name of Applicant :**
1)DIEBOLD INCORPORATED
Address of Applicant :28 Reid Street Ardeer Victoria 3022 Australia
(72)**Name of Inventor :**
1)CARDINAL Mike
2)MUNNECKE Joe

(57) Abstract :
A blast resistant and dispersement accessory adapted for retro fitting to an existing safe (1) or similar security device said accessory comprising an auxiliary casing (2) formed of blast resistant materials adapted for retro fitting to the body of said safe said casing including an interior chamber (4) to receive the explosive gasses generated by said blast one or a plurality of vent holes (3) communicating with said interior chamber and a sacrificial exterior vent door (5) or the like adapted to deploy open or to dissipate said explosive gasses applied to the interior of said safe and conduited to the said interior chamber wherein said exterior vent door is positioned remote from said vent holes so as to prevent direct access to said safe upon deployment.

No. of Pages : 16 No. of Claims : 14

(12) PATENT APPLICATION PUBLICATION
(19) INDIA
(22) Date of filing of Application :13/09/2012
(21) Application No.8018/DELNP/2012 A
(43) Publication Date : 21/03/2014

(54) Title of the invention : TRYCYCLIC COMPOUNDS AND PBK INHIBITORS CONTAINING THE SAME

(51) International classification :A01N43/42,C07D221/06
(31) Priority Document No :61/318606
(32) Priority Date :29/03/2010
(33) Name of priority country :U.S.A.
(86) International Application No :PCT/US2011/030278
Filing Date :29/03/2011
(87) International Publication No :WO 2011/123419
(61) Patent of Addition to Application Number :NA
Filing Date :NA
(62) Divisional to Application Number :NA
Filing Date :NA

(71)**Name of Applicant :**
1)ONCOTHERAPY SCIENCE INC.
Address of Applicant :2 1 Sakado 3 chome Takatsu ku Kawasaki shi Kanagawa 2130012 Japan
(72)**Name of Inventor :**
1)CUI Wenge
2)MATSUO Yo
3)HISADA Shoji
4)AHMED Feryan
5)HUNTLEY Raymond
6)SAJJADI HASHEMI Zohreh
7)JENKINS David M.
8)KARGBO Robert B.
9)CUI Wenge
10)GAUUAN Polivina Jolicia F.
11)WALKER Joel R.
12)DECORNEZ Helene
13)GURRAM Mahender

(57) Abstract :
Trycyclic compounds are provided. These compounds are PBK inhibitors and are useful for the treatment of PBK related diseases including cancer.

No. of Pages : 486 No. of Claims : 27

(12) PATENT APPLICATION PUBLICATION
(19) INDIA
(22) Date of filing of Application :13/09/2012
(21) Application No.8019/DELNP/2012 A
(43) Publication Date : 21/03/2014

(54) Title of the invention : FILTER ELEMENT AND FILTER DEVICE

(51) International classification :B01D29/11,B01D17/02,F02M37/22
(31) Priority Document No :2010090930
(32) Priority Date :09/04/2010
(33) Name of priority country :Japan
(86) International Application No :PCT/JP2011/059026
Filing Date :11/04/2011
(87) International Publication No :WO 2011/126136
(61) Patent of Addition to Application Number :NA
Filing Date :NA
(62) Divisional to Application Number :NA
Filing Date :NA

(71)**Name of Applicant :**
1)YAMASHIN FILTER CORP.
Address of Applicant :1 1 8 Sakuragicho Naka ku Yokohama shi Kanagawa 2310062 Japan
(72)**Name of Inventor :**
1)ISHIZUKA Masanori
2)ISHIZUKA Makoto

(57) Abstract :
A filter element (50) is provided with a first filtration material (51) which has a function of removing dust (D) in fuel (F) and also with a second filtration material (52) which is contained inside the first filtration material (51) and has a function of removing water (W) in the fuel (F).

No. of Pages : 54 No. of Claims : 5

(12) PATENT APPLICATION PUBLICATION
(19) INDIA
(22) Date of filing of Application :13/09/2012
(21) Application No.8020/DELNP/2012 A
(43) Publication Date : 21/03/2014

(54) Title of the invention : METHOD AND APPARATUS FOR DIFFERENTIAL PROTECTION OF AN ELECTRIC CONNECTION

(51) International classification :H02H3/28,H02H3/38
(31) Priority Document No :10159610.4
(32) Priority Date :12/04/2010
(33) Name of priority country :EPO
(86) International Application No :PCT/EP2011/054304
Filing Date :22/03/2011
(87) International Publication No :WO 2011/128184
(61) Patent of Addition to Application Number :NA
Filing Date :NA
(62) Divisional to Application Number :NA
Filing Date :NA

(71)**Name of Applicant :**
1)ABB TECHNOLOGY AG
Address of Applicant :Affolternstrasse 44 CH 8050 Z¼rich Switzerland
(72)**Name of Inventor :**
1)WAHLROOS Ari
2)ALTONEN Janne

(57) Abstract :
A method and an apparatus for differential protection of a three phase electric connection of an electric system the apparatus comprising: means (10A 10B) for determining a value of an operate quantity which operate quantity is based on a difference between current quantities at a first point and a second point of the electric connection (20) and means (10A 10B) for detecting a fault in the electric connection (20) between the first point and the second point if the value of the operate quantity exceeds a value of a predetermined threshold quantity wherein the operate quantity is based on a difference of residual currents at the first point and the second point or a quantity indicative thereof and a coefficient indicative of an angle between a residual voltage of the electric connection (20) and the difference of residual currents at the first point and the second point.

No. of Pages : 32 No. of Claims : 12

(12) PATENT APPLICATION PUBLICATION
(19) INDIA
(22) Date of filing of Application :18/09/2012
(21) Application No.8156/DELNP/2012 A
(43) Publication Date : 21/03/2014

(54) Title of the invention : STABILISATION OF VIRAL PARTICLES

(51) International classification :A61K35/76,A61K39/12,C12N7/02
(31) Priority Document No :1005497.1
(32) Priority Date :31/03/2010
(33) Name of priority country :U.K.
(86) International Application No :PCT/GB2011/000498
Filing Date :31/03/2011
(87) International Publication No :WO 2011/121306
(61) Patent of Addition to Application Number :NA
Filing Date :NA
(62) Divisional to Application Number :NA
Filing Date :NA

(71)**Name of Applicant :**
1)STABILITECH LTD.
Address of Applicant :London Bioscience Innovation Centre 2 Royal College Street London NW1 ONH U.K.
(72)**Name of Inventor :**
1)DREW Jeffrey
2)WOODWARD David
3)BAINBRIDGE John
4)CORTEYN Amanda

(57) Abstract :
A method for preserving viral particles comprising: (a) providing an aqueous solution of (i) viral particles (ii) optionally one or more sugars and (iii) a compound of formula (I) or a physiologically acceptable salt or ester thereof and/or a compound of formula (II) or a physiologically acceptable salt or ester thereof; and (b) drying the solution to form a composition incorporating said viral particles.

No. of Pages : 129 No. of Claims : 46

(12) PATENT APPLICATION PUBLICATION
(19) INDIA
(22) Date of filing of Application :18/09/2012
(21) Application No.8157/DELNP/2012 A
(43) Publication Date : 21/03/2014

(54) Title of the invention : EXCIPIENTS FOR STABILISING VIRAL PARTICLES POLYPEPTIDES OR BIOLOGICAL MATERIAL

(51) International classification :A61K39/12,A61K39/00,A61K47/20
(31) Priority Document No :1005521.8
(32) Priority Date :31/03/2010
(33) Name of priority country :U.K.
(86) International Application No :PCT/GB2011/000493
Filing Date :31/03/2011
(87) International Publication No :WO 2011/121301
(61) Patent of Addition to Application Number :NA
Filing Date :NA
(62) Divisional to Application Number :NA
Filing Date :NA

(71)**Name of Applicant :**
1)STABILITECH LTD
Address of Applicant :London Bioscience Innovation Centre 2 Royal College Street London NW1 0NH U.K.
(72)**Name of Inventor :**
1)DREW Jeffrey
2)WOODWARD David
3)BAINBRIDGE John
4)CORTEYN Amanda

(57) Abstract :
A sterile pharmaceutically acceptable aqueous solution which solution is provided in a sealed container and comprises: a pharmaceutically acceptable aqueous solvent; viral particles or a physiologically active polypeptide; an excipient selected from a polyethyleneimine; a compound of formula (I) or a physiologically acceptable salt or ester thereof; or a compound of formula (II) or a physiologically acceptable salt or ester thereof; and optionally one or more sugars.

No. of Pages : 172 No. of Claims : 52

(12) PATENT APPLICATION PUBLICATION
(19) INDIA
(22) Date of filing of Application :18/09/2012
(21) Application No.8160/DELNP/2012 A
(43) Publication Date : 21/03/2014

(54) Title of the invention : ELEVATOR DISPATCH CONTROL TO AVOID PASSENGER CONFUSION

(51) International classification :B66B1/18,B66B1/34
(31) Priority Document No :NA
(32) Priority Date :NA
(33) Name of priority country :NA
(86) International Application No :PCT/US2010/030678
Filing Date :12/04/2010
(87) International Publication No :WO 2011/129803
(61) Patent of Addition to Application Number :NA
Filing Date :NA
(62) Divisional to Application Number :NA
Filing Date :NA

(71)**Name of Applicant :**
1)OTIS ELEVATOR COMPANY
Address of Applicant :Ten Farm Springs Farmington Connecticut 06032 U.S.A.
(72)**Name of Inventor :**
1)STANLEY Jannah A.
2)KAMINSKI Ashley

(57) Abstract :
An exemplary method of controlling an elevator system includes determining a source floor of a new call from a passenger desiring elevator service. A direction of travel from the source floor for the new call is also determined. A path of a considered elevator car is simulated as if the new call were assigned to the considered elevator car by determining at least one of (i) a relationship between a position of the considered elevator car and the source floor or (ii) a relationship between a direction of movement of the considered elevator car and the direction of travel. The new call is assigned to one of a plurality of elevator cars if the assigning will satisfy each of (i) the one of the elevator cars will not move in a direction opposite the direction of travel during a time between the passenger boarding the one of the elevator cars and arriving at a destination of the passenger and (ii) the one of the elevator cars will not move in a direction opposite a travel direction of any currently assigned passenger during a time between the currently assigned passenger boarding the one of the elevator cars and arriving at a destination of the currently assigned passenger.

No. of Pages : 32 No. of Claims : 17

(12) PATENT APPLICATION PUBLICATION
(19) INDIA
(22) Date of filing of Application :14/09/2012
(21) Application No.8042/DELNP/2012 A
(43) Publication Date : 21/03/2014

(54) Title of the invention : CONTROL OF A WINDOW WASHER SYSTEM ASSOCIATED WITH A WIPER SYSTEM FOR A MOTOR VEHICLE

(51) International classification :B60S1/48,B60S1/52
(31) Priority Document No :10/01043
(32) Priority Date :16/03/2010
(33) Name of priority country :France
(86) International Application No :PCT/EP2011/051981
Filing Date :10/02/2011
(87) International Publication No :WO 2011/113648
(61) Patent of Addition to Application Number :NA
Filing Date :NA
(62) Divisional to Application Number :NA
Filing Date :NA

(71)**Name of Applicant :**
1)VALEO SYSTEMES DESSUYAGE
Address of Applicant :8 rue Louis Lormand F 78321 Le Mesnil Saint Denis France
(72)**Name of Inventor :**
1)CALLUIERE Johan
2)THEBAULT Denis
3)NEGRE Pierre Emmanuel

(57) Abstract :
The present invention relates to the control of a window washer system associated with a system for wiping a glazed surface of a motor vehicle said wiper system comprising a wiper motor for rotating at least one wiper blade holder arm and this window washer system comprising a liquid reservoir connected to at least one nozzle designed to deliver over a wiping cycle at least one liquid jet for at least a first window washer system activation period defined between an instant (t) for initiating the spraying of the liquid and an instant (t) for stopping the spraying of the liquid these instants each being determined as a function respectively of a first angular position and of a second angular position of the wiper blade holder arm defining a first angular sector in which the spraying of the liquid is continuous. According to the invention the instant (t) for initiating the spraying is advanced by a compensation period (t) corresponding at least to the period for feeding the liquid from the reservoir to the nozzle.

No. of Pages : 24 No. of Claims : 17

(12) PATENT APPLICATION PUBLICATION
(19) INDIA
(22) Date of filing of Application :14/09/2012
(21) Application No.8043/DELNP/2012 A
(43) Publication Date : 21/03/2014

(54) Title of the invention : SWITCHED POWER SUPPLY

(51) International classification :H02M7/217
(31) Priority Document No :PCT/FR2010/050471
(32) Priority Date :16/03/2010
(33) Name of priority country :PCT
(86) International Application No :PCT/FR2010/050471
Filing Date :16/03/2010
(87) International Publication No :WO 2011/114007
(61) Patent of Addition to Application Number :NA
Filing Date :NA
(62) Divisional to Application Number :NA
Filing Date :NA

(71)**Name of Applicant :**
1)DEVIALET
Address of Applicant :10 place Vend´me F 75001 Paris France
(72)**Name of Inventor :**
1)CALMEL Pierre Emmanuel
2)MORONVALLE Mathias

(57) Abstract :
The switched power supply (10) comprises: an input (16) for an AC input current (lPR) under an input voltage (VPR|); an output (36) for a DC output current (Uc) and successively from the input to the output a system of controlled breaker switches (20); a transformer (21) whose primary (24) is linked at the output of the system of controlled breaker switches (20); a rectifying circuit (28) connected across the terminals of a secondary circuit (26) of the transformer; and a storage capacitor (32) linked in parallel across the output terminals of the rectifier circuit (28) with interposition of a coil (34) the output (36) being formed across the terminals of the storage capacitor (32) the system of controlled breaker switches (20) is the only circuit between the input (16) and the output (36) to comprise switching members and it comprises means (22) for controlling the system of breaker switches (20) so as to control the amplitude of the input current (lPR) as a function of the input voltage (VPR|) of the output current (Uc) and of the voltage (Vsec) across the terminals of the storage capacitor (32).

No. of Pages : 13 No. of Claims : 9

(12) PATENT APPLICATION PUBLICATION
(19) INDIA
(22) Date of filing of Application :19/09/2012
(21) Application No.8172/DELNP/2012 A
(43) Publication Date : 21/03/2014

(54) Title of the invention : DERMAL FILLER COMPOSITION

(51) International classification :A61L27/60,A61L27/40,A61L27/48
(31) Priority Document No :1020100043753
(32) Priority Date :11/05/2010
(33) Name of priority country :Republic of Korea
(86) International Application No :PCT/KR2011/001556
Filing Date :07/03/2011
(87) International Publication No :WO 2011/142530
(61) Patent of Addition to Application Number :NA
Filing Date :NA
(62) Divisional to Application Number :NA
Filing Date :NA

(71)**Name of Applicant :**
1)JOE Siyeong
Address of Applicant :202 seunghyun villa 267 16 Nonhyeon dong Gangnam gu Seoul 135 010 Republic of Korea
2)JO Jaeyoung
3)JO, KANG SEON
(72)**Name of Inventor :**
1)JO Kang Seon

(57) Abstract :
The present invention relates to a novel dermal filler composition and to a method for preparing same. The composition of the present invention comprises as a main component cross linked dextran the molecular weight of which is 30 000 to 100 000. The composition can rapidly augment a defective area of the skin and maintain softness to the touch even when used alone. The composition eliminates the necessity of a pretreatment such as an allergy test which might otherwise be required prior to injection is inexpensive and is not easily decomposed or absorbed in vivo thereby maintaining the tissue volume augmentation effects thereof over a long period of time after injection. Therefore the composition is suitable for use in a procedure such as penile augmentation or the like which requires the injection of a large amount of dermal filler i.e. more than 20 cc. The composition of the present invention can be prepared through a simplified process to make the composition easily usable. The composition is soft to the touch when injected under the skin and can thus be applicable not only to the skin of the penis but also to the skin of other parts of the human body including the face.

No. of Pages : 25 No. of Claims : 6

(12) PATENT APPLICATION PUBLICATION
(19) INDIA
(22) Date of filing of Application :12/09/2012
(21) Application No.7960/DELNP/2012 A
(43) Publication Date : 21/03/2014

(54) Title of the invention : HIGH LEVEL EXPRESSION OF RECOMBINANT CRM197

(51) International classification :C12N15/78,C12N15/31,C12P21/02
(31) Priority Document No :61/319152
(32) Priority Date :30/03/2010
(33) Name of priority country :U.S.A.
(86) International Application No :PCT/US2010/030573
Filing Date :09/04/2010
(87) International Publication No :WO 2011/123139
(61) Patent of Addition to Application Number :NA
Filing Date :NA
(62) Divisional to Application Number :NA
Filing Date :NA

(71)**Name of Applicant :**
1)PFENEX INC.
Address of Applicant :10790 Roselle Street San Diego CA 92121 U.S.A.
(72)**Name of Inventor :**
1)RETALLACK Diane M.
2)CHEW Lawrence
3)JIN Hongfan

(57) Abstract :
The present invention relates to the field of recombinant protein production in bacterial hosts. In particular the present invention relates to a production process for obtaining high levels of a recombinant CRM197 protein from a bacterial host.

No. of Pages : 46 No. of Claims : 16

(12) PATENT APPLICATION PUBLICATION
(19) INDIA
(22) Date of filing of Application :12/09/2012
(21) Application No.7961/DELNP/2012 A
(43) Publication Date : 21/03/2014

(54) Title of the invention : POSITIONING DEVICE WORKING SYSTEM AND HOT WORKING APPARATUS

(51) International classification :B25J11/00
(31) Priority Document No :2010054077
(32) Priority Date :11/03/2010
(33) Name of priority country :Japan
(86) International Application No :PCT/JP2011/055590
Filing Date :10/03/2011
(87) International Publication No :WO 2011/111765
(61) Patent of Addition to Application Number :NA
Filing Date :NA
(62) Divisional to Application Number :NA
Filing Date :NA

(71)**Name of Applicant :**
1)SUMITOMO METAL INDUSTRIES LTD.
Address of Applicant :5 33 Kitahama 4 chome Chuo ku Osaka shi Osaka 5410041 Japan
2)SUMITOMO PIPE & TUBE CO. LTD.
3)KABUSHIKI KAISHA YASKAWA DENKI
(72)**Name of Inventor :**
1)OKAHISA Manabu
2)KINOSHITA Yusuke
3)SUYAMA Takashi
4)TOMIZAWA Atsushi
5)KUWAYAMA Shinjiro
6)HARA Mitsusato

(57) Abstract :
Provided are a positioning device capable of positioning a workpiece at lower cost in a reduced space and with higher accuracy even when the weight of the workpiece is large and a working system. Specifically provided is a positioning device comprising three robot arms (1-3) each having an arm and an actuator for driving the arm a mounting table (5) supported at a front end portion of each of the three robot arms (1-3) a fixture (6) for fixing a workpiece (W) mounted on the mounting table (5) to the mounting table (5) and a controller (9) for controlling the operations of the actuators.

No. of Pages : 21 No. of Claims : 6

(12) PATENT APPLICATION PUBLICATION
(19) INDIA
(22) Date of filing of Application :12/09/2012
(21) Application No.7962/DELNP/2012 A
(43) Publication Date : 21/03/2014

(54) Title of the invention : PROTEOGLYCAN CONTAINING MICRONEEDLE ARRAY

(51) International classification :A61M37/00,A61K8/64,A61K9/00
(31) Priority Document No :2010065089
(32) Priority Date :19/03/2010
(33) Name of priority country :Japan
(86) International Application No :PCT/JP2011/056643
Filing Date :18/03/2011
(87) International Publication No :WO 2011/115272
(61) Patent of Addition to Application Number :NA
Filing Date :NA
(62) Divisional to Application Number :NA
Filing Date :NA

(71)**Name of Applicant :**
1)COSMED PHARMACEUTICAL CO. LTD.
Address of Applicant :448 5 Kajii cho Kamigyo ku Kyoto shi Kyoto 6020841 Japan
2)OTSUKA PHARMACEUTICAL CO. LTD.
(72)**Name of Inventor :**
1)QUAN Ying shu
2)KAMIYAMA Fumio
3)TAKI Takao
4)KAWAI Kazuyoshi
5)TAKEMOTO Tadayoshi
6)HAMABUCHI Takuya
7)OHTA Kazuhide

(57) Abstract :
Provided is a novel microneedle array which (1) has the strength to withstand being inserted into the surface layer of the skin and/or the stratum corneum (2) has the fineness and flexibility to not cause pain or bleeding at the site of the surface layer of the skin and/or the stratum corneum into which the microneedle array is inserted and (3) exerts solubility and biodegradability with regard to the microneedle portion which is inserted into the skin. Said microneedle array is produced by forming microneedles which use proteoglycan as the base.

No. of Pages : 34 No. of Claims : 12

(12) PATENT APPLICATION PUBLICATION
(19) INDIA
(22) Date of filing of Application :14/09/2012
(21) Application No.8071/DELNP/2012 A
(43) Publication Date : 21/03/2014

(54) Title of the invention : CHILLING UNIT

(51) International classification :F24F1/22,F24F1/16,F24F1/56
(31) Priority Document No :2010030527
(32) Priority Date :15/02/2010
(33) Name of priority country :Japan
(86) International Application No :PCT/JP2011/053166
Filing Date :15/02/2011
(87) International Publication No :WO 2011/099629
(61) Patent of Addition to Application Number :NA
Filing Date :NA
(62) Divisional to Application Number :NA
Filing Date :NA

(71)**Name of Applicant :**
1)Toshiba Carrier Corporation
Address of Applicant :23 17 Takanawa 3 chome Minato ku Tokyo 1088580 Japan
(72)**Name of Inventor :**
1)MUROI Kunio
2)TANNO Hideki
3)OKADA Masahiro
4)OZAWA Kousuke
5)WATANABE Hiroaki
6)MATSUMOTO Kenjiro
7)ISHIGURO Takamitsu

(57) Abstract :
Disclosed is a chilling unit comprised of a housing (F) wherein a heat exchange unit (1) provided with an air heat exchanger (3) is mounted on the top of the housing and a machine chamber (2) is formed on the inside of the housing; a plurality of independent refrigeration cycle units (1RA) (2RB) which are contained in the machine chamber (2) and are comprised of refrigeration cycle devices excluding the air heat exchanger (3); and a control box (8) provided with a water circulation pump (13) and electronic components for controlling. The water circulation pump (13) the first refrigeration cycle unit (1RA) the second refrigeration cycle unit (2RB) and the control box (8) are arranged in this order from the back side to the front side of the housing (F) so that the control box (8) which contains electronic components that receive various kinds of signals to control electric components can be located at the most appropriate position. Thus the maintenance operation for the control box (8) can be easily performed and the operability can be improved.

No. of Pages : 53 No. of Claims : 7

(12) PATENT APPLICATION PUBLICATION
(19) INDIA
(22) Date of filing of Application :19/09/2012
(21) Application No.8195/DELNP/2012 A
(43) Publication Date : 21/03/2014

(54) Title of the invention : MUSTARD COMPOSITIONS

(51) International classification :A23L1/225,A23L3/3526,A23L3/3535
(31) Priority Document No :12/751015
(32) Priority Date :31/03/2010
(33) Name of priority country :U.S.A.
(86) International Application No :PCT/US2011/029288
Filing Date :22/03/2011
(87) International Publication No :WO 2011/123281
(61) Patent of Addition to Application Number :NA
Filing Date :NA
(62) Divisional to Application Number :NA
Filing Date :NA

(71)**Name of Applicant :**
1)THE PROCTER & GAMBLE COMPANY
Address of Applicant :One Procter & Gamble Plaza Cincinnati Ohio 45202 U.S.A.
(72)**Name of Inventor :**
1)EKANAYAKE Athula
2)VANDIEST Scott Alan
3)KESTER Jeffrey John
4)ZOUTENDAM Paul Henry
5)DAVID Jairus R.D.

(57) Abstract :
A white mustard essential oil having from about 30% to about 35% 4 hydroxybenzyl isothiocyanate by weight. An enriched white mustard essential oil having about 30% to about 80% 4 hydroxybenzyl isothiocyanate by weight. A food or beverage product can include the enriched white mustard essential oil. A flour including a mustard flour wherein the mustard flour is substantially free of sinalbin.

No. of Pages : 30 No. of Claims : 14

(12) PATENT APPLICATION PUBLICATION
(19) INDIA
(22) Date of filing of Application :14/09/2012
(21) Application No.8058/DELNP/2012 A
(43) Publication Date : 21/03/2014

(54) Title of the invention : A PROCESS FOR PURIFYING VITAMIN K DEPENDENT PROTEINS SUCH AS COAGULATION FACTOR IX

(51) International classification :C12N9/64
(31) Priority Document No :10158511.5
(32) Priority Date :30/03/2010
(33) Name of priority country :EPO
(86) International Application No :PCT/EP2011/054906
Filing Date :30/03/2011
(87) International Publication No :WO 2011/121020
(61) Patent of Addition to Application Number :NA
Filing Date :NA
(62) Divisional to Application Number :NA
Filing Date :NA

(71)**Name of Applicant :**
1)OCTAPHARMA AG
Address of Applicant :Seidenstrae 2 CH 8853 Lachen Switzerland
(72)**Name of Inventor :**
1)GILLJAM Gustav
2)WINGE Stefan

(57) Abstract :
A process of manufacturing a prion free Vitamin K dependent Protein in a purification sequence employing chromatography characterized in that at least one chromatography step is performed using a multimodal resin providing a fraction containing Vitamin K dependent Protein in an aqueous solution; contacting the fraction containing the Vitamin K dependent Protein with a multimodal resin at a pH between 6 9; optionally washing the multimodal resin having the Vitamin K dependent Protein adsorbed with an aqueous washing buffer to wash away contaminants and retain the Vitamin K dependent Protein before the Vitamin K dependent Protein is eluted; the Vitamin K dependent Protein is eluting from the multimodal resin at a pH between 6 to 9 in a buffer comprising arginine; and optionally collecting Vitamin K dependent Protein containing fractions in purified or enriched form.

No. of Pages : 36 No. of Claims : 16

(12) PATENT APPLICATION PUBLICATION
(19) INDIA
(22) Date of filing of Application :14/09/2012
(21) Application No.8059/DELNP/2012 A
(43) Publication Date : 21/03/2014

(54) Title of the invention : PROCESS FOR THE PURIFICATION OF A GROWTH FACTOR PROTEIN

(51) International classification :C07K14/475,C07K14/52,C07K14/535
(31) Priority Document No :10158522.2
(32) Priority Date :30/03/2010
(33) Name of priority country :EPO
(86) International Application No :PCT/EP2011/054920
Filing Date :30/03/2011
(87) International Publication No :WO 2011/121031
(61) Patent of Addition to Application Number :NA
Filing Date :NA
(62) Divisional to Application Number :NA
Filing Date :NA

(71)**Name of Applicant :**
1)OCTAPHARMA AG
Address of Applicant :Seidenstrae 2 CH 8853 Lachen Switzerland
(72)**Name of Inventor :**
1)GILLJAM Gustav
2)WINGE Stefan
3)TIEMEYER Maya

(57) Abstract :
A process of purifying a Growth Factor Protein in a purification sequence employing chromatography characterized in that: at least one chromatography is performed using a multimodal resin; the Growth Factor Protein binds to the multimodal resin at a pH between 4 to 6.2 and the Growth Factor Protein is eluting at a pH > 6.3 and the elution of Growth Factor Protein is improved by addition of arginine and/or NaCI to the eluting buffer. The multimodal resin step is followed by a yeast derived affinity ligand resin step which results of a purity of the product >90%.

No. of Pages : 49 No. of Claims : 19

(12) PATENT APPLICATION PUBLICATION
(19) INDIA
(22) Date of filing of Application :19/09/2012
(21) Application No.8182/DELNP/2012 A
(43) Publication Date : 21/03/2014

(54) Title of the invention : OSTOMY BASE PLATE WITH MOULDABLE CENTRE PART

(51) International classification :A61F5/443
(31) Priority Document No :PA 2010 70112
(32) Priority Date :19/03/2010
(33) Name of priority country :Denmark
(86) International Application No :PCT/DK2011/050090
Filing Date :18/03/2011
(87) International Publication No :WO 2011/113442
(61) Patent of Addition to Application Number :NA
Filing Date :NA
(62) Divisional to Application Number :NA
Filing Date :NA

(71)**Name of Applicant :**
1)COLOPLAST A/S
Address of Applicant :Holtedam 1 DK 3050 Humlebaek Denmark
(72)**Name of Inventor :**
1)EDVARDSEN Henrik
2)HANSEN Michael

(57) Abstract :
The current invention relates to a base plate (1) for an ostomy collection device the base plate comprises at least one backing layer (3) whereon an outer adhesive layer (4) is disposed on the proximal side of said backing layer wherein the outer adhesive layer encircles an inner adhesive layer (7) also disposed on the proximal side of at least one backing layer said inner adhesive layer encircles a through going hole (5) of the base plate defining a central axis A A wherein at least a part of the backing layer whereon the inner adhesive layer is disposed is extendable in a radial direction in respect to the central axis A A. By allowing the backing layer to be radially extendable with the inner adhesive layer the backing layer functions as a barrier to output from the stoma. Thus output from the stoma will not come in direct contact with the distal side of the inner adhesive layer which is shielded by the backing layer and thus extends the wear time of the ostomy appliance and reduces the risk that leakage may occur.

No. of Pages : 15 No. of Claims : 9

(12) PATENT APPLICATION PUBLICATION
(19) INDIA
(22) Date of filing of Application :19/09/2012
(21) Application No.8183/DELNP/2012 A
(43) Publication Date : 21/03/2014

(54) Title of the invention : METHOD AND APPARATUS FOR DETECTING A MAGNETIC CHARACTERISTIC VARIABLE IN A CORE

(51) International classification :G01R33/07,G01R33/00,H01F27/38
(31) Priority Document No :NA
(32) Priority Date :NA
(33) Name of priority country :NA
(86) International Application No :PCT/EP2010/054857
Filing Date :14/04/2010
(87) International Publication No :WO 2011/127969
(61) Patent of Addition to Application Number :NA
Filing Date :NA
(62) Divisional to Application Number :NA
Filing Date :NA

(71)**Name of Applicant :**
1)SIEMENS AG –STERREICH
Address of Applicant :Siemensstrae 90 A 1210 Wien Austria
(72)**Name of Inventor :**
1)HAMBERGER Peter
2)LEIKERMOSER Albert

(57) Abstract :
Method for detecting a magnetic characteristic variable in particular the magnetic field strength (H1) in a section (L1) of a core (2) through which a magnetic flux flows wherein part (18) of the magnetic flux is branched off from the core (2) and is guided at least in sections in a magnetic shunt part (7) wherein the magnetic material of the shunt part (7) is not saturated and wherein the magnetic characteristic variable (H1) is determined from this part (18) of the magnetic flux that has been branched off or from a variable derived therefrom using a sensor and evaluation device (8 10).

No. of Pages : 27 No. of Claims : 18

(12) PATENT APPLICATION PUBLICATION
(19) INDIA
(22) Date of filing of Application :14/09/2012

(21) Application No.8062/DELNP/2012 A
(43) Publication Date : 21/03/2014

(54) Title of the invention : INTRAVASCULAR TISSUE DISRUPTION

(51) International classification :A61M5/168,A61M31/00,A61M25/10
(31) Priority Document No :61/317231
(32) Priority Date :24/03/2010
(33) Name of priority country :U.S.A.
(86) International Application No :PCT/US2011/029829
Filing Date :24/03/2011
(87) International Publication No :WO 2011/119857
(61) Patent of Addition to Application Number :NA
Filing Date :NA
(62) Divisional to Application Number :NA
Filing Date :NA

(71)**Name of Applicant :**
1)SHIFAMED HOLDINGS LLC
Address of Applicant :745A Camden Avenue Campbell CA 95008 U.S.A.
(72)**Name of Inventor :**
1)SALAHIEH Amr
2)SCHAER Alan
3)KROLIK Jeff
4)SPIRIDIGLIOZZI John
5)PAI Suresh
6)SAUL Tom

(57) Abstract :
Disrupting tissue and devices and systems for disrupting tissue. The disclosure describes ways to deliver moieties to a target tissue where the target tissue in general is not at the point of introduction in such a way that minimal damage is produced in the tissue at the point of introduction. In some embodiments this is accomplished by jetting fluid at high velocity into the target tissue. The disclosure further describes novel agents deliverable in such systems for use in remodeling tissues. Some of these agents comprise a liquid while others do not. Additionally although not specifically described in detail much of the disclosure may additionally be used in the delivery of therapeutic drugs.

No. of Pages : 49 No. of Claims : 64

(12) PATENT APPLICATION PUBLICATION
(19) INDIA
(22) Date of filing of Application :14/09/2012
(21) Application No.8063/DELNP/2012 A
(43) Publication Date : 21/03/2014

(54) Title of the invention : CONTINUOUS PROCESS FOR PREPARING POLYFLUOROACRYLATE PARTICLES

(51) International classification :C08F2/00
(31) Priority Document No :61/315937
(32) Priority Date :20/03/2010
(33) Name of priority country :U.S.A.
(86) International Application No :PCT/US2011/028950
Filing Date :18/03/2011
(87) International Publication No :WO 2011/119422
(61) Patent of Addition to Application Number :NA
Filing Date :NA
(62) Divisional to Application Number :NA
Filing Date :NA

(71)**Name of Applicant :**
1)RELYPSA INC.
Address of Applicant :5301 Patrick Henry Drive Santa Clara CA 95054 U.S.A.
(72)**Name of Inventor :**
1)TYSON George

(57) Abstract :
The present invention is directed to a continuous process for preparing a crosslinked polymer comprising a fluoro group.

No. of Pages : 27 No. of Claims : 18

(12) PATENT APPLICATION PUBLICATION
(19) INDIA
(22) Date of filing of Application :14/09/2012
(21) Application No.8064/DELNP/2012 A
(43) Publication Date : 21/03/2014

(54) Title of the invention : POLYMER COATINGS CONTAINING DRUG POWDER OF CONTROLLED MORPHOLOGY

(51) International classification :A61K 9/14
(31) Priority Document No :60/699,650
(32) Priority Date :15/07/2005
(33) Name of priority country :U.S.A.
(86) International Application No :PCT/US2006/027321
Filing Date :14/07/2006
(87) International Publication No :WO 2007/011707
(61) Patent of Addition to Application Number :NA
Filing Date :NA
(62) Divisional to Application Number :368/DELNP/2008
Filed on :14/01/2008

(71)**Name of Applicant :**
1)MICELL TECHNOLOGIES, INC.
Address of Applicant :7516 PRECISION DRIVE, RALEIGH, NC 27617 (US) U.S.A.
(72)**Name of Inventor :**
1)TAYLOR, DOUG
2)MCCLAIN, JIM
3)SMOKE, CLINT
4)COLE, MIKE
5)DEYOUNG, JAMES

(57) Abstract :
A method, integrated system and Active Poster for processing mobile touch transactions. The integration consists of an RFID device which may be standalone, affixed to, or part of a mobile or hand held portable wireless communication device (optionally using a Contact Less (CL) SIM) with near field communication capability, an Active Poster with near field communication capability, an issuers or mobile network providers application and a host computer with networking capability.

No. of Pages : 99 No. of Claims : 34

(12) PATENT APPLICATION PUBLICATION
(19) INDIA
(22) Date of filing of Application :14/09/2012
(21) Application No.8065/DELNP/2012 A
(43) Publication Date : 21/03/2014

(54) Title of the invention : SYSTEM AND PROCESS FOR MANAGING SALE OF ONE OR MORE ITEMS

(51) International classification :G06Q30/00,G06Q50/00,G06Q10/00
(31) Priority Document No :2010900868
(32) Priority Date :02/03/2010
(33) Name of priority country :Australia
(86) International Application No :PCT/AU2010/001370
Filing Date :15/10/2010
(87) International Publication No :WO 2011/106822
(61) Patent of Addition to Application Number :NA
Filing Date :NA
(62) Divisional to Application Number :NA
Filing Date :NA

(71)**Name of Applicant :**
1)EQUEUE PTY LTD
Address of Applicant :22 Warburton Street Brunswick Victoria 3056 Australia
(72)**Name of Inventor :**
1)BEAVIS Jay
2)FLAVEL Jonathon
3)FLAVEL Ben

(57) Abstract :
A system for managing sale of one or more items said system for performing the steps of generating predetermined activities for potential purchasers of one or more of said items before said items are available for sale; ranking the potential purchasers in accordance with results of said predetermined activities; and allocating each potential purchaser of said purchasers a time period within which he or she is permitted to purchase one or more of said items after the items are made available for sale in accordance with his or her ranking.

No. of Pages : 36 No. of Claims : 73

(12) PATENT APPLICATION PUBLICATION
(19) INDIA
(22) Date of filing of Application :19/09/2012
(21) Application No.8189/DELNP/2012 A
(43) Publication Date : 21/03/2014

(54) Title of the invention : METHOD FOR PRODUCING CARBAMATE COMPOUND CARBAMATE COMPOUND AND METHOD FOR PRODUCING ISOCYANATE COMPOUND USING SAME

(51) International classification	:C07C269/04,C07C263/04,C07C265/14
(31) Priority Document No	:2010086126
(32) Priority Date	:02/04/2010
(33) Name of priority country	:Japan
(86) International Application No Filing Date	:PCT/JP2011/056095 :15/03/2011
(87) International Publication No	:WO 2011/125429
(61) Patent of Addition to Application Number Filing Date	:NA :NA
(62) Divisional to Application Number Filing Date	:NA :NA

(71)**Name of Applicant :**
1)Asahi Glass Company Limited.
Address of Applicant :5 1 Marunouchi 1 chome Chiyoda ku Tokyo 1008405 Japan
(72)**Name of Inventor :**
1)OKAZOE Takashi
2)NAGASAKI Yuko
3)OKAMOTO Hidekazu

(57) Abstract :
Disclosed is a method for producing a carbamate compound represented by formula (3) wherein a fluorine containing carbonate diester compound represented by formula (1) and a non aromatic diamine compound represented by formula (2) are caused to react with each other without using a catalyst. Also disclosed is a method for producing an isocyanate compound represented by formula (20) from the carbamate compound without using a catalyst. In the formulae R represents a monovalent fluorine containing aliphatic hydrocarbon group; and A represents a divalent aliphatic hydrocarbon group a divalent alicyclic hydrocarbon group or a divalent aromatic aliphatic hydrocarbon group.

No. of Pages : 50 No. of Claims : 7

(12) PATENT APPLICATION PUBLICATION
(19) INDIA
(22) Date of filing of Application :19/09/2012
(21) Application No.8191/DELNP/2012 A
(43) Publication Date : 21/03/2014

(54) Title of the invention : OLIGOMER SPECIFIC AMYLOID BETA EPITOPE AND ANTIBODIES

(51) International classification :C07K14/47,A61K39/00,A61K39/395
(31) Priority Document No :61/310167
(32) Priority Date :03/03/2010
(33) Name of priority country :U.S.A.
(86) International Application No :PCT/CA2011/000238
Filing Date :03/03/2011
(87) International Publication No :WO 2011/106885
(61) Patent of Addition to Application Number :NA
Filing Date :NA
(62) Divisional to Application Number :NA
Filing Date :NA

(71)**Name of Applicant :**
1)THE UNIVERSITY OF BRITISH COLUMBIA
Address of Applicant :103 6190 Agronomy Road Vancouver British Columbia V6T 1Z3 Canada
(72)**Name of Inventor :**
1)CASHMAN Neil R.

(57) Abstract :
A novel constrained peptide epitope derived from wherein the eptitope comprises the amino acid sequence SNK related antibody compositions and methods of use. An isolated antibody that specifically binds to a cyclic peptide comprising the conformational epitope which comprises the amino acid sequence SNK and corresponding to a solvent exposed antibody accessible knuckle region of oligomeric is described. An antigenic peptide comprising an epitope having a constrained cyclic configuration which comprises the amino acid seqeuence SNK and corresponding to a solvent exposed antibody accessible knuckle region of oligomeric is also described. Methods of treating preventing and diagnosing Alzheimer s disease are also described.

No. of Pages : 57 No. of Claims : 20

(12) PATENT APPLICATION PUBLICATION
(19) INDIA
(22) Date of filing of Application :17/09/2012
(21) Application No.8101/DELNP/2012 A
(43) Publication Date : 21/03/2014

(54) Title of the invention : JACKET STRUCTURE FOR OFFSHORE CONSTRUCTIONS

(51) International classification :E02D27/42,F16B7/04
(31) Priority Document No :EP10163750
(32) Priority Date :25/05/2010
(33) Name of priority country :EPO
(86) International Application No :PCT/EP2010/063551
Filing Date :15/09/2010
(87) International Publication No :WO 2011/147475
(61) Patent of Addition to Application Number :NA
Filing Date :NA
(62) Divisional to Application Number :NA
Filing Date :NA

(71)**Name of Applicant :**
1)SIEMENS AKTIENGESELLSCHAFT
Address of Applicant :Wittelsbacherplatz 2 80333 M¼nchen Germany
(72)**Name of Inventor :**
1)STIESDAL Henrik

(57) Abstract :
Jacket structure (1) for offshore constructions particularly jacket structure (l)for an offshore wind turbine comprising a number of profiles (2) in axial or angled alignment and a number of connecting members (3) whereby a connection of the profiles (2) and/or the connecting members (3) is established by means of a bolted connection.

No. of Pages : 19 No. of Claims : 15

(12) PATENT APPLICATION PUBLICATION
(19) INDIA
(22) Date of filing of Application :17/09/2012
(21) Application No.8102/DELNP/2012 A
(43) Publication Date : 21/03/2014

(54) Title of the invention : APPARATUS FOR GENERATING POWER FROM FLUID FLOW

(51) International classification	:F03B13/08,F03B17/06,F03B13/26
(31) Priority Document No	:1004321.4
(32) Priority Date	:16/03/2010
(33) Name of priority country	:U.K.
(86) International Application No	:PCT/GB2011/050523
Filing Date	:16/03/2011
(87) International Publication No	:WO 2011/114155
(61) Patent of Addition to Application Number	:NA
Filing Date	:NA
(62) Divisional to Application Number	:NA
Filing Date	:NA

(71)**Name of Applicant :**
1)VERDERG LTD
Address of Applicant :Lansbury Estate 102 Lower Guildford Road Knaphill Surrey GU21 2EP U.K.
(72)**Name of Inventor :**
1)ROBERTS Peter

(57) Abstract :
An apparatus for generating electricity using water flow in a body of water comprises: an array of spaced apart elements. Each element defines an elongate flow passage and has an upstream side and an elgonate downstream side each element being provided with a series of holes spaced along its length and the downstream side extending and tapering away in the direction of flow. The elements are arranged side by side such that opposing walls of adjacent elements define a venturi section and a first diffuser section extending downstream from the venturi section. The apparatus also comprises: a flow conduit having an inlet and an outlet; a turbine located in the flow conduit; and a generator connected to the turbine; The flow passages are connected to the outlet of the flow conduit such that the flow of water through the venturi sections causes water to be drawn through the flow conduit out via the holes the resulting flow driving the turbine.

No. of Pages : 44 No. of Claims : 30

(12) PATENT APPLICATION PUBLICATION
(19) INDIA
(22) Date of filing of Application :20/09/2012
(21) Application No.8217/DELNP/2012 A
(43) Publication Date : 21/03/2014

(54) Title of the invention : DEVICE FOR CLOSING AND FASTENING TWO LENGTHS OF FLEXIBLE STRAPPING

(51) International classification :A44B11/02,A44B11/04,A44B11/18
(31) Priority Document No :10/01253
(32) Priority Date :29/03/2010
(33) Name of priority country:France
(86) International Application No :PCT/FR2011/050666
Filing Date :28/03/2011
(87) International Publication No :WO 2011/124816
(61) Patent of Addition to Application Number :NA
Filing Date :NA
(62) Divisional to Application Number :NA
Filing Date :NA

(71)**Name of Applicant :**
1)CHAPRON Denis
Address of Applicant :8 place de Verdun F 49400 Saumur France
(72)**Name of Inventor :**
1)CHAPRON Denis

(57) Abstract :
The present invention relates to a device for closing and fastening two lengths of flexible strapping particularly two end sections (15a 15b) of flexible strapping forming a belt the end sections being fitted with securing means. According to the invention the securing means (1) comprise an end loop (2) to be fixed to a first length of strapping (15a) and a lateral loop (3) to engage with a second length of strapping (15b) which is to engage with the two loops (2 3) during closing and fastening operations by being successively introduced starting from the lateral loop (3) through the rear opening (9) in the lateral loop (3) and the front opening (8) in the same lateral loop (3) so that the second length of strapping (15b) is folded into an overall S shape having three superposed parts (15b1 15b2 and 15b3).

No. of Pages : 12 No. of Claims : 10

(12) PATENT APPLICATION PUBLICATION
(19) INDIA
(22) Date of filing of Application :20/09/2012
(21) Application No.8218/DELNP/2012 A
(43) Publication Date : 21/03/2014

(54) Title of the invention : IMPROVEMENTS IN OR RELATING TO SIGHTING MECHANISMS

(51) International classification :G01S13/86,F41G3/00
(31) Priority Document No :10275028.8
(32) Priority Date :23/03/2010
(33) Name of priority country :EUROPEAN UNION
(86) International Application No :PCT/GB2011/050504
Filing Date :15/03/2011
(87) International Publication No :WO 2011/117605
(61) Patent of Addition to Application Number :NA
Filing Date :NA
(62) Divisional to Application Number :NA
Filing Date :NA

(71)**Name of Applicant :**
1)BAE SYSTEMS PLC
Address of Applicant :6 Carlton Gardens London SW1Y 5AD U.K.
(72)**Name of Inventor :**
1)EASTON Nicholas John

(57) Abstract :
Described herein is a sighting mechanism that includes a system (10) for modifying an optical sight which does not suffer from disadvantages associated with poor visibility. The system (10) includes a source of continuous wave (CW) radiation (16) that provides CW radiation to an antenna (22) for illuminating a field of view. The antenna (22) also collects reflections from objects within the field of view for processing. If only moving objects within the field of view are of interest reflections from stationary objects that are at the same frequency as the illuminating radiation can be discarded. For moving objects the reflections are modulated in accordance with the movement of the object and have a frequency that is proportional to their radial velocity. The modulated reflections can be interpreted rather well by the human brain and can be relayed directly to the user through ear phones or other similar devices.

No. of Pages : 18 No. of Claims : 10

(12) PATENT APPLICATION PUBLICATION
(19) INDIA
(22) Date of filing of Application :20/09/2012
(21) Application No.8213/DELNP/2012 A
(43) Publication Date : 21/03/2014

(54) Title of the invention : METHOD AND INSTALLATION FOR ULTRASOUND INSPECTION OF BUTT WELDING OF TWO TRANSVERSE ENDS OF TWO METAL STRIPS

(51) International classification :G01N29/24,G01N29/04,B23K11/00
(31) Priority Document No :10290219.4
(32) Priority Date :23/04/2010
(33) Name of priority country :EPO
(86) International Application No :PCT/EP2010/061783
Filing Date :12/08/2010
(87) International Publication No :WO 2011/131252
(61) Patent of Addition to Application Number :NA
Filing Date :NA
(62) Divisional to Application Number :NA
Filing Date :NA

(71)**Name of Applicant :**
1)SIEMENS VAI METALS TECHNOLOGIES SAS
Address of Applicant :51 rue Sibert F 42403 Saint Chamond France
(72)**Name of Inventor :**
1)MICHAUT Marc

(57) Abstract :
The present invention describes a method of inspecting butt welding (1c) of two transverse ends of two metal strips (1a 1b) said ends being respectively brought together and held between a first and a second jaw (2a 2b) thus disposed along each of the transverse ends characterized in that the first and the second jaws exhibit at least a spacing such that a gap (54 55) is formed so as to allow through a first channel (52) for transmitting incident waves capable of generating ultrasound waves on a surface of the first strip and to allow through a second channel (61) for transmitting emergent waves coming out on the surface of the second strip; the incident waves of the first channel are generated by means of laser pulses under a regime at least designed for an implementation of a third channel of ultrasound waves generated on the surface of the first strip passing through the weld and emerging into the second channel; on the basis of a step (7) of analyzing the regime related to the pulses and of at least one measurement of a signature of a vibratory state of the surface of the second strip upon the emergence of the ultrasound waves into the second channel weld inspection characteristics are extracted for identification. An installation allowing the implementation of this method of inspection is also proposed.

No. of Pages : 28 No. of Claims : 15

(12) PATENT APPLICATION PUBLICATION
(19) INDIA
(22) Date of filing of Application :20/09/2012
(21) Application No.8214/DELNP/2012 A
(43) Publication Date : 21/03/2014

(54) Title of the invention : MACHINE FOR JOINING THE ENDS OF STEEL STRIPS WHICH MACHINE IS SUITED TO THE INDUCTION HEAT TREATMENT OF JOINING WELDS

(51) International classification :B23K26/26,B23K26/42,B23K31/02
(31) Priority Document No :10290218.6
(32) Priority Date :23/04/2010
(33) Name of priority country :EPO
(86) International Application No :PCT/EP2010/061784
Filing Date :12/08/2010
(87) International Publication No :WO 2011/131253
(61) Patent of Addition to Application Number :NA
Filing Date :NA
(62) Divisional to Application Number :NA
Filing Date :NA

(71)**Name of Applicant :**
1)SIEMENS VAI METALS TECHNOLOGIES SAS
Address of Applicant :51 rue Sibert F 42403 Saint Chamond France
(72)**Name of Inventor :**
1)THOMASSON Herv
2)BOLLEGUE Fabien

(57) Abstract :
The present invention relates to a joining machine intended for joining the ends of successive strips (11 12) in a strip treatment installation said joining machine comprising the device that welds a first end of a strip (11) to a second end of another strip (12) two pairs of respectively symmetrically arranged clamping jaws (21 22 31 32) a first pair of clamping jaws (21 31) comprising a first upper clamping jaw (21) and a first lower clamping jaw (31) which are capable of gripping said first end of strip (11) and a second pair of clamping jaws (22 32) comprising a second upper clamping jaw (22) and a second lower clamping jaw (32) which are capable of gripping said second end of strip (12) said clamping jaws (21 22 31 32) being intended to hold and to position said first end of strip (11) facing said second end of strip (12) so that said ends of strip (11 12) can be welded together characterized in that at least two clamping jaws (21 22 31 32) of said two pairs of clamping jaws each comprise a part (222 322 212 312) capable of contacting one of said ends of strip (11) that is intended to be welded to another end of strip (12) said part (222 322 212 312) being characterized by a geometry and at least one constituent material each of which is able to reduce the strength of the eddy currents likely to be created in said clamping jaw as a result of electromagnetic induction.

No. of Pages : 34 No. of Claims : 15

(12) PATENT APPLICATION PUBLICATION
(19) INDIA
(22) Date of filing of Application :20/09/2012
(21) Application No.8215/DELNP/2012 A
(43) Publication Date : 21/03/2014

(54) Title of the invention : CATHETER ADAPTER

(51) International classification :A61M25/01,A61M25/16,A61M39/10
(31) Priority Document No :12/659020
(32) Priority Date :23/02/2010
(33) Name of priority country :U.S.A.
(86) International Application No :PCT/US2011/000287
Filing Date :16/02/2011
(87) International Publication No :WO 2011/106077
(61) Patent of Addition to Application Number :NA
Filing Date :NA
(62) Divisional to Application Number :NA
Filing Date :NA

(71)**Name of Applicant :**
1)SMITHS MEDICAL ASD INC.
Address of Applicant :160 Weymouth Street Rockland MA 02370 U.S.A.
(72)**Name of Inventor :**
1)CLARK Geoff
2)SCHLERF Christian

(57) Abstract :
A clam shell shaped adapter for retaining a catheter to establish a fluid path between the catheter and a fluid device or line has two shells integrally connected by a living hinge. A first shell has a luer end and a catheter end wherein a catheter is insertable through its aperture. A flexible tube at the inner surface of the first shell connects the luer end to the catheter end. The catheter is inserted through the catheter end to extend along the flexible tubing. A retainer structure is provided at the inner surface of the second shell so that when the first and second shells close upon each other the retainer structure presses against the flexible tubing to fixedly retain the catheter in a fluidly sealing manner. Respective latch mechanisms provided at the shells lockingly couple the two shells to each other. The latch mechanisms are located remotely from the outer surfaces and peripheries of the shells to prevent inadvertent uncoupling of the shells. The shells may be uncoupled by inserting a pointed object through a notch to the interior of the device to disengage the latch mechanisms.

No. of Pages : 26 No. of Claims : 20

(12) PATENT APPLICATION PUBLICATION
(19) INDIA
(22) Date of filing of Application :17/09/2012
(21) Application No.8113/DELNP/2012 A
(43) Publication Date : 21/03/2014

(54) Title of the invention : LOAD BEARING CONSTRUCTION PILE

(51) International classification :E02D27/16
(31) Priority Document No :1003179.7
(32) Priority Date :25/02/2010
(33) Name of priority country :U.K.
(86) International Application No :PCT/GB2011/050374
Filing Date :25/02/2011
(87) International Publication No :WO 2011/104559
(61) Patent of Addition to Application Number :NA
Filing Date :NA
(62) Divisional to Application Number :NA
Filing Date :NA

(71)**Name of Applicant :**
1)REID Stephen James
Address of Applicant :Willow Cottage Mellis Road Yaxley EYE IP23 8DB U.K.
2)WINCOTT Nicholas James
(72)**Name of Inventor :**
1)REID Stephen James
2)WINCOTT Nicholas James

(57) Abstract :
The present invention provides a load bearing pile arrangement (2) comprising a plurality of load bearing construction pile assemblies (4) each of which comprises a pile (6) provided with a support manifold (8) at an upper end (10) thereof. Each pile (6) includes an outer tube (14) and an inner tube (16) between which when the assembly (4) is in use provides a pathway for fluid pumped from above and down through the inner tube (16) to a vortex manifold (32) where the fluid is caused to swirl before passing upwards between the inner tube (16) and the outer tube (14). The fluid is also caused to swirl as it passes upwards between the tubes (14) and (16) by at least one collar (44) comprising an annular ring (46) fixedly mounted on the tube (16) the ring (46) having helices (48) which cause the fluid to continue swirling as it passes upwards between the tubes (14) and (16). In use the load bearing pile arrangement can be used to: recover heat from the surrounding ground; store heat in the surrounding ground; or to store coolth especially in a desert locality.

No. of Pages : 22 No. of Claims : 14

(12) PATENT APPLICATION PUBLICATION
(19) INDIA
(22) Date of filing of Application :20/09/2012
(21) Application No.8230/DELNP/2012 A
(43) Publication Date : 21/03/2014

(54) Title of the invention : COATING FOR A COCRMO SUBSTRATE

(51) International classification :C23C16/27,A61F2/30,A61L27/04
(31) Priority Document No :61/324664
(32) Priority Date :15/04/2010
(33) Name of priority country :U.S.A.
(86) International Application No :PCT/US2011/032481
Filing Date :14/04/2011
(87) International Publication No :WO 2011/130506
(61) Patent of Addition to Application Number :NA
Filing Date :NA
(62) Divisional to Application Number :NA
Filing Date :NA

(71)**Name of Applicant :**
1)SYNTHES USA LLC
Address of Applicant :1302 Wrights Lane East West Chester PA 19380 U.S.A.
2)SYNTHES GMBH
(72)**Name of Inventor :**
1)HAUERT Roland
2)THORWARTH Goetz
3)FALUB Claudiu
4)MUELLER Ulrich
5)VOISARD Cyril

(57) Abstract :
A coating for a CoCrMo substrate including a first layer located directly on the substrate including Ta(CoCrMo) o a second layer located directly on the first layer and including tantalum, a third layer located directly on the second layer and including tantalum carbide, and a fourth layer located directly on the third layer and including diamond-like carbon (DLC).

No. of Pages : 29 No. of Claims : 20

(12) PATENT APPLICATION PUBLICATION
(19) INDIA
(22) Date of filing of Application :20/09/2012
(21) Application No.8231/DELNP/2012 A
(43) Publication Date : 21/03/2014

(54) Title of the invention : CONTROLLER APPARATUS FOR ELECTRIC VEHICLE

(51) International classification :B60L15/20,H02K7/10,H02P29/00
(31) Priority Document No :2010072057
(32) Priority Date :26/03/2010
(33) Name of priority country :Japan
(86) International Application No :PCT/JP2011/056183
Filing Date :16/03/2011
(87) International Publication No :WO 2011/118466
(61) Patent of Addition to Application Number :NA
Filing Date :NA
(62) Divisional to Application Number :NA
Filing Date :NA

(71)**Name of Applicant :**
1)NTN CORPORATION
Address of Applicant :3 17 Kyomachibori 1 chome Nishi ku Osaka shi Osaka 5500003 Japan
(72)**Name of Inventor :**
1)OZAKI Takayoshi
2)OKADA Koichi
3)KANDA Takeshi

(57) Abstract :
Disclosed is a controller apparatus for electric vehicles wherein redundancy is given to the controller enabling motor control to be conducted appropriately even when abnormality such as malfunctioning of the controller occurs and enabling reliability thereof to be improved. The controller apparatus for electric vehicles is provided with a plurality of controllers (53) each of which comprises a power circuit unit (55) that outputs drive current for a motor (B) and a control circuit unit (54) that is an electronic circuit that controls the power circuit unit (55) in response to motor drive commands (a) given thereto from an upper level controlling means. An abnormality evaluating means (56) for evaluating abnormality in the controller (53) being used and generating a switching signal (c) is installed in the controller apparatus. A plurality of switching means (57 58) for switching the controller to a controller (53) that is in a state capable of functioning for the motor (B) in response to the switching signal (c) is also installed in the controller apparatus. The number of controllers (53) can be made to be just one in which case a plurality of control circuit units (54) or power circuit units (55) are installed and switching is conducted thereamong.

No. of Pages : 47 No. of Claims : 15

(12) PATENT APPLICATION PUBLICATION
(19) INDIA
(22) Date of filing of Application :20/09/2012
(21) Application No.8232/DELNP/2012 A
(43) Publication Date : 21/03/2014

(54) Title of the invention : PYRAZOLE SYNTHESIS BY COUPLING OF CARBOXYLIC ACID DERIVATIVES AND ENAMINES

(51) International classification :C07D231/10
(31) Priority Document No :10 2010 013 282.9
(32) Priority Date :29/03/2010
(33) Name of priority country :Germany
(86) International Application No :PCT/EP2011/054484
Filing Date :23/03/2011
(87) International Publication No :WO 2011/120861
(61) Patent of Addition to Application Number :NA
Filing Date :NA
(62) Divisional to Application Number :NA
Filing Date :NA

(71)**Name of Applicant :**
1)WESTF„LISHE WILHELMS UNIVERSIT„T MNSTER
Address of Applicant :Schlossplatz 2 48149 M¼nster Germany
(72)**Name of Inventor :**
1)NEUMANN Julia
2)SURI Mamta
3)GLORIUS Frank

(57) Abstract :
The present invention describes a new type of synthesis process of pyrazoles by oxidative reaction of enamines with suitable N containing carboxylic acid derivatives.

No. of Pages : 51 No. of Claims : 7

(12) PATENT APPLICATION PUBLICATION
(19) INDIA
(22) Date of filing of Application :20/09/2012
(21) Application No.8234/DELNP/2012 A
(43) Publication Date : 21/03/2014

(54) Title of the invention : MULTI MODE GRAPHIC DISPLAY FOR A TEST AND/OR MEASUREMENT DEVICE

(51) International classification :G09G5/22
(31) Priority Document No :61/338612
(32) Priority Date :20/02/2010
(33) Name of priority country :U.S.A.
(86) International Application No :PCT/US2011/025675
Filing Date :22/02/2011
(87) International Publication No :WO 2011/103550
(61) Patent of Addition to Application Number :NA
Filing Date :NA
(62) Divisional to Application Number :NA
Filing Date :NA

(71)**Name of Applicant :**
1)OMEGA ENGINEERING INC.
Address of Applicant :One Omega Drive P.O. Box 4047 Stamford Connecticut 06907 0047 U.S.A.
(72)**Name of Inventor :**
1)HOLLANDER Milton B.
2)MACCHIARELLI Michael A.

(57) Abstract :
A measurement device (100) includes a processor (110) one or more probes (150) one or more switches (130) and a multi mode graphic display (120). The probes provide first signals (D) including measurement data and information to the processor. The switches provide second signals (M) indicating a desired one of a plurality of operational modes. The operational modes include a plurality of display modes (MODE 1 MODE 15). The display is selectively configurable in response to the second signals to exhibit the measurement data and information received by the processor in the plurality of display modes. The display modes include a plurality of exhibition formats of text graphics and images representing the received measurement data and information. The exhibition formats include one or more of a character size color brightness location orientation language and value display type of the text graphics and images representing the measurement data and information.

No. of Pages : 16 No. of Claims : 12

(12) PATENT APPLICATION PUBLICATION
(19) INDIA
(22) Date of filing of Application :17/09/2012
(21) Application No.8092/DELNP/2012 A
(43) Publication Date : 21/03/2014

(54) Title of the invention : PROCESS OF EXTRACTING ISOTHIOCYANATES

(51) International classification :A61K36/31,C12P13/00
(31) Priority Document No :12/750,999
(32) Priority Date :31/03/2010
(33) Name of priority country :U.S.A.
(86) International Application No :PCT/US2011/029287
Filing Date :22/03/2011
(87) International Publication No :WO 2011/123280
(61) Patent of Addition to Application Number :NA
Filing Date :NA
(62) Divisional to Application Number :NA
Filing Date :NA

(71)**Name of Applicant :**
1)THE PROCTER & GAMBLE COMPANY
Address of Applicant :One Procter & Gamble Plaza Cincinnati Ohio 45202 U.S.A.
(72)**Name of Inventor :**
1)EKANAYAKE Athula
2)VANDIEST Scott Alan
3)KESTER Jeffrey John
4)ZOUTENDAM Paul Henry
5)DAVID Jairus R. D.

(57) Abstract :
A process for producing an essential oil. The essential oil can be white mustard essential oil. The white mustard essential oil can include a moisture sensitive isothiocyanate compound. The moisture sensitive isothiocyanate compound can be 4 HBITC. The essential oil can be produced from mustard seed which can comprise a precursor sinalbin and myrosinase enzyme. The mustard seed can be reduced into a powder. Activation of the myrosinase enzyme by using a water solvent and a promoter to form a slurry can be performed wherein the myrosinase enzyme catalyzes the production of an essential oil comprising an isothiocyanate from the sinalbin precursor.

No. of Pages : 31 No. of Claims : 15

(12) PATENT APPLICATION PUBLICATION
(19) INDIA
(22) Date of filing of Application :20/09/2012
(21) Application No.8224/DELNP/2012 A
(43) Publication Date : 21/03/2014

(54) Title of the invention : HIGH SPEED POUCHER

(51) International classification :B65B1/02,B65B29/00,B65B43/50
(31) Priority Document No :61/317926
(32) Priority Date :26/03/2010
(33) Name of priority country :U.S.A.
(86) International Application No :PCT/IB2011/001149
Filing Date :28/03/2011
(87) International Publication No :WO 2011/117751
(61) Patent of Addition to Application Number :NA
Filing Date :NA
(62) Divisional to Application Number :NA
Filing Date :NA

(71)**Name of Applicant :**
1)PHILIP MORRIS PRODUCTS S.A.
Address of Applicant :Quai Jeanrenaud 3 CH 2000 Neuchatel Switzerland
(72)**Name of Inventor :**
1)GARTHAFFNER Martin T.
2)WILLIAMS Dwight D.
3)STRAIGHT Jeremy J.
4)WEBB David J.
5)MILLER Carl G.

(57) Abstract :
An apparatus and methods for producing at extremely high production speeds small pouches (100) filled with tobacco or other granular powdered or solid content. An endless web substrate (12) with or without flavor film (14) thereon is formed into a tubular shape (29) with a longitudinal seam (106). The tube (29) is cut to individual lengths (10V) and a procession of tubes is crimp closed at one end (102) filled and crimp closed at the other end (104) to complete pouch production. During production the seams formed at the crimped ends (102 104) of the pouch are parallel to one another and the longitudinal seam (106) of the pouch (100) is midway between the sides of the pouch (100) and orthogonal to the seams formed at the crimped ends (102 104) of the pouch (100).

No. of Pages : 35 No. of Claims : 36

(12) PATENT APPLICATION PUBLICATION
(19) INDIA
(22) Date of filing of Application :20/09/2012
(21) Application No.8225/DELNP/2012 A
(43) Publication Date : 21/03/2014

(54) Title of the invention : INHIBITION OF SENSORY IRRITATION DURING CONSUMPTION OF NON SMOKEABLE TOBACCO PRODUCTS

(51) International classification :A24B13/00,A24B15/30,A24B15/28
(31) Priority Document No :61/318/268
(32) Priority Date :26/03/2010
(33) Name of priority country :U.S.A.
(86) International Application No :PCT/IB2011/001093
Filing Date :28/03/2011
(87) International Publication No :WO 2011/117740
(61) Patent of Addition to Application Number :NA
Filing Date :NA
(62) Divisional to Application Number :NA
Filing Date :NA

(71)**Name of Applicant :**
1)PHILIP MORRIS PRODUCTS S.A.
Address of Applicant :Quai Jeanrenaud 3 CH 2000 Neuchatel Switzerland
(72)**Name of Inventor :**
1)KOBAL Gerd
2)REEH Peter
3)HEYNEKAMP Justin
4)MISHRA Munmaya K.
5)LANGSTON Timothy B.
6)FLORA Jason W.

(57) Abstract :
An orally enjoyable tobacco product (10 100) includes a portion of smokeless tobacco comprising an active ingredient. The active ingredient is selected from the group consisting of a mercaptan camphor borneol isobomeol bornyl acetate isobornyl acetate mono bornyl succinate mono isobornyl succinate mono bornyl formate and mono isobornyl formate. The active ingredient is present in an amount effective to reduce or eliminate the sensory irritation arising from the smokeless tobacco. Also disclosed is a method of making such a product.

No. of Pages : 35 No. of Claims : 17

(12) PATENT APPLICATION PUBLICATION
(19) INDIA
(22) Date of filing of Application :20/09/2012
(21) Application No.8226/DELNP/2012 A
(43) Publication Date : 21/03/2014

(54) Title of the invention : INHIBITION OF UNDESIRED SENSORY EFFECTS BY THE COMPOUND CAMPHOR

(51) International classification :A24B13/00,A24B15/30,A24B15/28
(31) Priority Document No :61/318253
(32) Priority Date :26/03/2010
(33) Name of priority country:U.S.A.
(86) International Application No :PCT/IB2011/000994
Filing Date :28/03/2011
(87) International Publication No :WO 2011/117735
(61) Patent of Addition to Application Number :NA
Filing Date :NA
(62) Divisional to Application Number :NA
Filing Date :NA

(71)**Name of Applicant :**
1)PHILIP MORRIS PRODUCTS S.A.
Address of Applicant :Quai Jeanrenaud 3 CH 2000 Neuchatel Switzerland
(72)**Name of Inventor :**
1)KOBAL Gerd
2)GOGOVA Maria
3)POLUR Prasad
4)MCKINNEY Diana

(57) Abstract :
A smokeless tobacco product (10 100) or medicinal nicotine product comprises nicotine and camphor dissolved in a non flavored oily carrier. Preferably the camphor is present in a concentration ranging from about 600 to about 1300 ppm. Also disclosed are methods of making such products.

No. of Pages : 25 No. of Claims : 13

(12) PATENT APPLICATION PUBLICATION
(19) INDIA
(22) Date of filing of Application :20/09/2012
(21) Application No.8227/DELNP/2012 A
(43) Publication Date : 21/03/2014

(54) Title of the invention : METHOD AND COMPOSITION FOR LONG LASTING FLAVOR DELIVERY SYSTEM

(51) International classification :A23L1/22,A24B15/28
(31) Priority Document No :61/318200
(32) Priority Date :26/03/2010
(33) Name of priority country :U.S.A.
(86) International Application No :PCT/IB2011/001133
Filing Date :28/03/2011
(87) International Publication No :WO 2011/117747
(61) Patent of Addition to Application Number :NA
Filing Date :NA
(62) Divisional to Application Number :NA
Filing Date :NA

(71)**Name of Applicant :**
1)PHILIP MORRIS PRODUCTS S.A.
Address of Applicant :Quai Jeanrenaud 3 CH 2000 Neuchatel Switzerland
(72)**Name of Inventor :**
1)MONGIA Gagan

(57) Abstract :
A flavor gradient capsule having concentric shells with flavor increasing from outside to inside to balance desensitization of flavor receptors during a slow dissolution in the mouth. The capsule has a core (101)(201) with a concentrated flavorant an inner shell (102)(202) substantially surrounding the core with the same flavorant at a lower concentration and an outer shell (103)(203) substantially surrounding the inner shell (102)(202) with the same flavorant at a yet lower concentration. Also disclosed are methods of making such flavor gradient capsules and orally enjoyable products incorporating the same.

No. of Pages : 8 No. of Claims : 15

(12) PATENT APPLICATION PUBLICATION
(19) INDIA
(22) Date of filing of Application :17/09/2012
(21) Application No.8119/DELNP/2012 A
(43) Publication Date : 21/03/2014

(54) Title of the invention : 3D DISPARITY MAPS

(51) International classification :H04N13/00
(31) Priority Document No :61/319,566
(32) Priority Date :31/03/2010
(33) Name of priority country :U.S.A.
(86) International Application No :PCT/IB2011/000708
Filing Date :31/03/2011
(87) International Publication No :WO 2011/121437
(61) Patent of Addition to Application Number :NA
Filing Date :NA
(62) Divisional to Application Number :NA
Filing Date :NA

(71)**Name of Applicant :**
1)THOMSON LICENSING
Address of Applicant :1 5 rue Jeanne dArc F 92130 Issy les Moulineaux France
(72)**Name of Inventor :**
1)BOREL Thierry
2)OSTERMANN Ralf
3)PUTZKE ROEMING Wolfram

(57) Abstract :
A particular implementation accesses a disparity value for a particular location in a picture the disparity value indicating disparity with respect to a particular resolution. The particular implementation modifies the accessed disparity value based on multiple resolutions to produce a modified disparity value. Another implementation accesses a disparity value for a particular location in a picture the picture having a particular resolution and the disparity value indicating disparity with respect to another resolution that is different from the particular resolution and that is based on multiple resolutions. A further implementation modifies the accessed disparity value to produce a modified disparity value indicating disparity with respect to the particular resolution.

No. of Pages : 49 No. of Claims : 37

(12) PATENT APPLICATION PUBLICATION
(19) INDIA
(22) Date of filing of Application :20/09/2012
(21) Application No.8235/DELNP/2012 A
(43) Publication Date : 21/03/2014

(54) Title of the invention : EMULSIONS FOR MICROENCAPSULATION COMPRISING BIODEGRADABLE SURFACE ACTIVE BLOCK COPOLYMERS AS STABILIZERS

(51) International classification :A61K9/107,A61K9/113
(31) Priority Document No :61/317738
(32) Priority Date :26/03/2010
(33) Name of priority country :U.S.A.
(86) International Application No :PCT/US2011/029900
Filing Date :25/03/2011
(87) International Publication No :WO 2011/119903
(61) Patent of Addition to Application Number :NA
Filing Date :NA
(62) Divisional to Application Number :NA
Filing Date :NA

(71)**Name of Applicant :**
1)EVONIK CORPORATION
Address of Applicant :299 Jefferson Road Parsippany NJ 07054 U.S.A.
(72)**Name of Inventor :**
1)MARKLAND Peter

(57) Abstract :
Disclosed herein are surface active biodegradable block copolymers comprising one or more hydrophobic blocks and one or more hydrophilic blocks. The surface active polymers are used as stabilizers in emulsions which are used in microencapsulation processes. Also disclosed are microparticles prepared from the emulsions.

No. of Pages : 24 No. of Claims : 36

(12) PATENT APPLICATION PUBLICATION
(19) INDIA
(22) Date of filing of Application :20/09/2012
(21) Application No.8236/DELNP/2012 A
(43) Publication Date : 21/03/2014

(54) Title of the invention : MONOCLONAL ANTIBODY DIRECTED AGAINST THE P17 PROTEIN OF HIV CAPABLE OF NEUTRALISING THE BINDING OF P17 TO THE P17 RECEPTOR (P17R)

(51) International classification :C07K16/10,A61K39/395,A61P31/18
(31) Priority Document No :TO2010A000257
(32) Priority Date :31/03/2010
(33) Name of priority country :Italy
(86) International Application No :PCT/IB2011/051363
Filing Date :30/03/2011
(87) International Publication No :WO 2011/121556
(61) Patent of Addition to Application Number :NA
Filing Date :NA
(62) Divisional to Application Number :NA
Filing Date :NA

(71)**Name of Applicant :**
1)MEDESTEA RESEARCH & PRODUCTION S.P.A.
Address of Applicant :Via Ribes 5 I 10010 Colleretto Giacosa (Torino) Italy
(72)**Name of Inventor :**
1)CARUSO Arnaldo
2)MERIZZI Giulia Federica
3)SOLETI Antonio

(57) Abstract :
An anti HIV p17 monoclonal antibody is described which is capable of neutralizing the binding between multiple HTV 1 p17 protein variants and p17R receptor. Furthermore the use of the monoclonal antibody of the invention as a medicament against HIV and related pathologies such as AIDS lymphoma and dementia is described.

No. of Pages : 23 No. of Claims : 15

(12) PATENT APPLICATION PUBLICATION
(19) INDIA
(22) Date of filing of Application :20/09/2012
(21) Application No.8237/DELNP/2012 A
(43) Publication Date : 21/03/2014

(54) Title of the invention : APPLYING A SEAL TO A FUEL CELL COMPONENT

(51) International classification :H01M8/04,C09K3/10
(31) Priority Document No :NA
(32) Priority Date :NA
(33) Name of priority country :NA
(86) International Application No :PCT/US2010/034489
Filing Date :12/05/2010
(87) International Publication No :WO 2011/142750
(61) Patent of Addition to Application Number :NA
Filing Date :NA
(62) Divisional to Application Number :NA
Filing Date :NA

(71)**Name of Applicant :**
1)UTC POWER CORPORATION
Address of Applicant :195 Governors Highway South Windsor CT 06074 U.S.A.
(72)**Name of Inventor :**
1)RIDGEWAY Kristoffer
2)HOFFMAN John F.

(57) Abstract :
An exemplary method of applying a seal to a fuel cell component includes providing a release layer on one side of a seal. The release layer has reinforcing fibers. Another side of the seal is placed against a selected portion of the fuel cell component. The seal release layer and fuel cell component are heated. The release layer is then removed after the seal is secured to the fuel cell component.

No. of Pages : 11 No. of Claims : 20

(12) PATENT APPLICATION PUBLICATION
(19) INDIA
(22) Date of filing of Application :20/09/2012
(21) Application No.8238/DELNP/2012 A
(43) Publication Date : 21/03/2014

(54) Title of the invention : GENETIC MARKER FOR THE DIAGNOSIS OF DEMENTIA WITH LEWY BODIES

(51) International classification :C12Q1/68
(31) Priority Document No :10382042.9
(32) Priority Date :24/02/2010
(33) Name of priority country :EPO
(86) International Application No :PCT/EP2011/000903
Filing Date :24/02/2011
(87) International Publication No :WO 2011/104023
(61) Patent of Addition to Application Number :NA
Filing Date :NA
(62) Divisional to Application Number :NA
Filing Date :NA

(71)**Name of Applicant :**
1)UNIVERSITAT AUT'NOMA DE BARCELONA
Address of Applicant :Edifici A Campus de la UAB s/n 08193 Cerdanyola del Vall¨s Spain
2)FUNDACI INSTITUT DINVESTIGACI EN CIˆNCIES DE LA SALUT GERMANS TRIAS I PUJOL
(72)**Name of Inventor :**
1)BEYER Katrin
2)DOMINGO SBAT Montserrat
3)ARIZA FERN NDEZ Aurelio

(57) Abstract :
Specific alterations in BChE gene have been found which allow determining whether a patient suffers from dementia with Lewy bodies (DLB) and allow distinguishing it from Alzheimer s disease. The invention provides an in vitro method for the diagnosis of DLB comprising determining in a biological sample from a subject the genotype of the following alterations in butyrylcholinesterase (BChE) gene: the polymorphic sites at position 68974 in NCBI Accession Number NG_009031 (i.e. position 934 in SEQ ID NO: 28) and the polymorphic sites 3687 4206 4443 and the poly thymine region at positions 4780 to 4786 said positions with reference to NCBI Accession Number NG_009031 (i.e. positions 3687 4206 and 4443 respectively in SEQ ID NO: 1) which corresponds to the nucleotide sequence of human BChE gene.

No. of Pages : 47 No. of Claims : 16

(12) PATENT APPLICATION PUBLICATION
(19) INDIA
(22) Date of filing of Application :20/09/2012
(21) Application No.8239/DELNP/2012 A
(43) Publication Date : 21/03/2014

(54) Title of the invention : REGULATION OF CONTRIBUTION OF SECONDARY ENERGY SOURCES TO POWER GRID

(51) International classification :H02J7/35,H02J3/24,H02J3/28
(31) Priority Document No :12/722271
(32) Priority Date :11/03/2010
(33) Name of priority country :U.S.A.
(86) International Application No :PCT/US2011/000446
Filing Date :10/03/2011
(87) International Publication No :WO 2011/112255
(61) Patent of Addition to Application Number :NA
Filing Date :NA
(62) Divisional to Application Number :NA
Filing Date :NA

(71)**Name of Applicant :**
1)THE AES CORPORATION
Address of Applicant :4300 Wilson Boulevard Arlington VA 22203 U.S.A.
(72)**Name of Inventor :**
1)GEINZER Jay
2)SHELTON Christopher J.
3)MEERSMAN Steven

(57) Abstract :
An energy storage medium is combined with a secondary energy source that supplies power to an electricity distribution grid. The charge and discharge behavior of the energy storage medium is controlled so that rapid increases in the output of a secondary source of energy are absorbed by the storage system whereas rapid decreases in the output of the secondary source are compensated by discharging stored energy onto the grid. The combined contributions of the secondary source and the energy storage system ensures a rate of change that does not exceed a defined level. Maximum and minimum output power levels for the secondary source can be established to define a normal operating range. The charging or discharging of the energy storage system is also performed when the secondary output power level exceeds or falls below the limits of the defined range.

No. of Pages : 29 No. of Claims : 22

(12) PATENT APPLICATION PUBLICATION
(19) INDIA
(22) Date of filing of Application :17/09/2012
(21) Application No.8120/DELNP/2012 A
(43) Publication Date : 21/03/2014

(54) Title of the invention : FUEL INJECTION DEVICE FOR ENGINE

(51) International classification :F02M69/04,F02M51/06,F02M55/02
(31) Priority Document No :2010-092145
(32) Priority Date :13/04/2010
(33) Name of priority country :Japan
(86) International Application No :PCT/JP2011/059046
Filing Date :12/04/2011
(87) International Publication No :WO 2011/129316
(61) Patent of Addition to Application Number :NA
Filing Date :NA
(62) Divisional to Application Number :NA
Filing Date :NA

(71)**Name of Applicant :**
1)SUZUKI MOTOR CORPORATION
Address of Applicant :300 Takatsuka cho Minami ku Hamamatsu shi Shizuoka 4328611 Japan
(72)**Name of Inventor :**
1)MURAMATSU Takayoshi
2)HAMAZAWA Kouhei

(57) Abstract :
A fuel injection valve (11) is raised from an air intake pipe (122) and an electric power source coupler (18) is provided so as to protrude from a side of the body of the fuel injection valve (11). A cap section (16) from which a fuel piping joint (15) protrudes is provided to a fuel introduction side end section of the fuel injection valve (11). The cap section (16) is joined to a pair of mounting bosses (14) formed so as to protrude from the air intake pipe (122). The rectilinear line which connects the pair of mounting bosses (14) is set to be substantially parallel in a plan view to the axis of the air intake pipe (122). The fuel piping joint (15) is provided so as to protrude on one side relative to the rectilinear line which connects the pair of mounting bosses (14) and the electric power source coupler (18) is provided so as to protrude on the other side.

No. of Pages : 35 No. of Claims : 4

(12) PATENT APPLICATION PUBLICATION
(19) INDIA
(22) Date of filing of Application :20/09/2012

(21) Application No.8240/DELNP/2012 A
(43) Publication Date : 21/03/2014

(54) Title of the invention : CO CRYSTALS OF PYRIMETHANIL OR CYPRODINIL

(51) International classification :A01N43/54,C07D239/42,A01N25/00
(31) Priority Document No :1006326.1
(32) Priority Date :15/04/2010
(33) Name of priority country :U.K.
(86) International Application No :PCT/GB2011/000531
Filing Date :06/04/2011
(87) International Publication No :WO 2011/128618
(61) Patent of Addition to Application Number :NA
Filing Date :NA
(62) Divisional to Application Number :NA
Filing Date :NA

(71)**Name of Applicant :**
1)SYNGENTA LIMITED
Address of Applicant :European Regional Centre Priestley Road Surrey Research Park Guildford Surrey GU2 7YH U.K.
(72)**Name of Inventor :**
1)GEORGE Neil
2)FORREST James Owen
3)BURTON Rebecca Claire
4)AAKEROY Christer Bjrn

(57) Abstract :
The present invention relates to co crystals of cyprodinil or pyrimethanil and a co crystal forming compound which has at least one imide and/or oxime functional group.

No. of Pages : 39 No. of Claims : 23

(12) PATENT APPLICATION PUBLICATION
(19) INDIA
(22) Date of filing of Application :20/09/2012
(21) Application No.8241/DELNP/2012 A
(43) Publication Date : 21/03/2014

(54) Title of the invention : COMPOSITIONS AND METHODS FOR IMPROVED RETENTION OF A PHARMACEUTICAL COMPOSITION AT A LOCAL ADMINISTRATION SITE

(51) International classification	:A61K9/16,A61K47/02,A61K47/36
(31) Priority Document No	:61/318574
(32) Priority Date	:29/03/2010
(33) Name of priority country	:U.S.A.
(86) International Application No	:PCT/US2011/030332
Filing Date	:29/03/2011
(87) International Publication No	:WO 2011/126839
(61) Patent of Addition to Application Number	:NA
Filing Date	:NA
(62) Divisional to Application Number	:NA
Filing Date	:NA

(71)**Name of Applicant :**
1)EVONIK CORPORATION
Address of Applicant :299 Jefferson Road Parsippany New Jersey 07054 U.S.A.
(72)**Name of Inventor :**
1)TICE Thomas R.
2)BURTON Kevin W.

(57) Abstract :
Disclosed herein are compositions comprising cross linkers for cross linking a retention vehicle polymer. The compositions are particularly useful for local administration of a bioactive agent wherein prolonged or extended availability of the bioactive agent at the site of administration is desired. Also disclosed are methods of delivering the compositions to a subject.

No. of Pages : 23 No. of Claims : 21

(12) PATENT APPLICATION PUBLICATION
(19) INDIA
(22) Date of filing of Application :20/09/2012
(21) Application No.8243/DELNP/2012 A
(43) Publication Date : 21/03/2014

(54) Title of the invention : TWISTING DEVICE ADAPTED TO SIMULTANEOUSLY TWIST A PLURALITY OF ELECTRIC BAR CONDUCTORS FOR MAKING A STATOR OR ROTOR WINDING FOR AN ELECTRIC MACHINE AND AN EXTRACTOR ASSEMBLY SUITABLE FOR COOPERATING WITH SAID TWISTING DEVICE

(51) International classification :H02K15/04
(31) Priority Document No :NA
(32) Priority Date :NA
(33) Name of priority country :NA
(86) International Application No :PCT/IT2010/000174
Filing Date :23/04/2010
(87) International Publication No :WO 2011/132207
(61) Patent of Addition to Application Number :NA
Filing Date :NA
(62) Divisional to Application Number :NA
Filing Date :NA

(71)**Name of Applicant :**
1)TECNOMATIC S.P.A.
Address of Applicant :Zona lndustriale Santa Scolastica Via Copernico 2 I 64013 Corropoli (Teramo) Italy
(72)**Name of Inventor :**
1)GUERCIONI Sante

(57) Abstract :
A twisting device (10) is described adapted to simultaneously twist a plurality of bar electric conductors (11) for making a stator or rotor winding for an electric machine comprising: at least one first body (12) extending around a twisting axis (Z Z) and comprising a first circular array of channels (15) having centre on such an axis (Z Z); and at least one second body (13) extending around and coaxial with the first body (12) comprising a second circular array of channels (16) with centre on the twisting axis (Z Z); associated with each of the channels (15) of at least one of said first and second arrays a channel extension groove (15A) extending longitudinally in a direction parallel to the twisting axis (Z Z) and projecting from the respective channel (15) in a direction (CC) circumferential with respect to said axis (Z Z).

No. of Pages : 35 No. of Claims : 15

(12) PATENT APPLICATION PUBLICATION
(19) INDIA
(22) Date of filing of Application :20/09/2012
(21) Application No.8244/DELNP/2012 A
(43) Publication Date : 21/03/2014

(54) Title of the invention : METHODS OF TREATING CANCER

(51) International classification :A61K9/14,A61K31/337,A61K31/555
(31) Priority Document No :61/318774
(32) Priority Date :29/03/2010
(33) Name of priority country :U.S.A.
(86) International Application No :PCT/US2011/030209
Filing Date :28/03/2011
(87) International Publication No :WO 2011/123395
(61) Patent of Addition to Application Number :NA
Filing Date :NA
(62) Divisional to Application Number :NA
Filing Date :NA

(71)**Name of Applicant :**
1)ABRAXIS BIOSCIENCE LLC
Address of Applicant :11755 Wilshire Boulevard Suite 2100 Los Angeles California 90025 U.S.A.
(72)**Name of Inventor :**
1)DESAI Neil P.
2)SOON SHIONG Patrick

(57) Abstract :
The present invention provides methods and compositions for treating non small cell lung cancer (NSCLC) by administering a) a composition comprising nanoparticles that comprise paclitaxel and an albumin and b) a platinum based agent (e.g. carboplatin). The present application also provides methods of treating prostate cancer by administering to the individual a) an effective amount of a composition comprising nanoparticles comprising docetaxel and an albumin; and b) an effective amount of a steroid.

No. of Pages : 100 No. of Claims : 23

(12) PATENT APPLICATION PUBLICATION
(19) INDIA
(22) Date of filing of Application :13/09/2012
(21) Application No.8010/DELNP/2012 A
(43) Publication Date : 21/03/2014

(54) Title of the invention : *N6* (FERROCENMETHYL)QUINAZOLIN 2 4 6 TRIAMIN (H2) AND THE DERIVATIVES AND PRODRUGS THEREOF AS ANTILEISHMANIAL ANTIPROTOZOAL ANTIPARASITIC AND ANTIMICROBIAL AGENTS

(51) International classification :C07F15/02,A61K33/26
(31) Priority Document No :MX/a/2010/002868
(32) Priority Date :26/04/2010
(33) Name of priority country :Mexico
(86) International Application No :PCT/MX2011/000025
Filing Date :21/02/2011
(87) International Publication No :WO 2011/136631
(61) Patent of Addition to Application Number :NA
Filing Date :NA
(62) Divisional to Application Number :NA
Filing Date :NA

(71)**Name of Applicant :**
1)GALINDO SEVILLA Norma del Carmen
Address of Applicant :Calle Bosque del Emperador No. 27 Col. La Herradura C.P. 52784 Huixquilucan Edo. de Mex. Mexico
2)HERN NDEZ LUIS Francisco
(72)**Name of Inventor :**
1)GALINDO SEVILLA Norma del Carmen
2)HERN NDEZ LUIS Francisco

(57) Abstract :
The invention relates to the use of compound N6 (ferrocenmethyl)quinazolin 2 4 6 triamin (H2) and the derivatives and prodrugs thereof having an antimicrobial (antibiotic microbicidal) antiparasitic (parasiticidal) antiprotozoal (protozoacidal) antileishmanial (leishmanicidal) activity and to the use thereof as a drug for human and animal vertebrates.

No. of Pages : 20 No. of Claims : 9

(12) PATENT APPLICATION PUBLICATION
(19) INDIA
(22) Date of filing of Application :13/09/2012
(21) Application No.8011/DELNP/2012 A
(43) Publication Date : 21/03/2014

(54) Title of the invention : METHOD FOR PRODUCING DIRECTIONAL ELECTROMAGNETIC STEEL SHEET

(51) International classification :C21D8/12,C22C38/00,C22C38/60
(31) Priority Document No :2010061298
(32) Priority Date :17/03/2010
(33) Name of priority country :Japan
(86) International Application No :PCT/JP2011/056074
Filing Date :15/03/2011
(87) International Publication No :WO 2011/115120
(61) Patent of Addition to Application Number :NA
Filing Date :NA
(62) Divisional to Application Number :NA
Filing Date :NA

(71)**Name of Applicant :**
1)NIPPON STEEL& SUMITOMO MATAL CORPORATION
Address of Applicant :6 1 MARUNOUCHI 2 CHOME CHIYODA KU Tokyo 1008071, JAPAN
(72)**Name of Inventor :**
1)MURAKAMI Kenichi
2)HAMA Chie
3)MIZUKAMI Kazumi
4)USHIGAMI Yoshiyuki
5)NAKAMURA Shuichi

(57) Abstract :
Disclosed is a method for producing a directional electromagnetic steel sheet wherein: a decarburized nitrided steel sheet is obtained by heating and hot rolling specific steel that contains 0.0005 0.0050% by mass of Te at a temperature not more than 1 320°C and then subjecting the resulting steel to annealing cold rolling decarburization annealing and nitriding annealing; and a separating agent for annealing is applied over the surface of the decarburized nitrided steel sheet and finish annealing is carried out thereby forming a glass coating film. The N content in the decarburized nitrided steel sheet is set to be 0.0150 0.0250% by mass and satisfy the following relation: 2 — [Te] + [N] = 0.0300% by mass. In this connection [Te] represents the Te content and [N] represents the N content.

No. of Pages : 38 No. of Claims : 4

(12) PATENT APPLICATION PUBLICATION
(19) INDIA
(22) Date of filing of Application :13/09/2012
(21) Application No.8013/DELNP/2012 A
(43) Publication Date : 21/03/2014

(54) Title of the invention : CONTROL DEVICE

(51) International classification :H05K5/00,H05K5/06,B60R16/023
(31) Priority Document No :10 2010 002 947.5
(32) Priority Date :17/03/2010
(33) Name of priority country :Germany
(86) International Application No :PCT/EP2011/051908
Filing Date :09/02/2011
(87) International Publication No :WO 2011/113645
(61) Patent of Addition to Application Number :NA
Filing Date :NA
(62) Divisional to Application Number :NA
Filing Date :NA

(71)**Name of Applicant :**
1)ROBERT BOSCH GMBH
Address of Applicant :Postfach 30 02 20 70442 Stuttgart Germany
(72)**Name of Inventor :**
1)LIPPOK Ralf
2)LUETZERATH Stephan
3)LUX Markus
4)DEGIRMENCI Ibrahim
5)PHILIPP Eckhardt

(57) Abstract :
The invention relates to a control device (10a) comprising a housing unit (12a) and a circuit module (14a) which is arranged in the housing unit (12a) and has a circuit carrier (16a) at least one electric/electronic circuit unit (18a) mounted on the circuit carrier (16a) and at least one contact unit (20a) for the electric contact of the control device (10a) with other electric modules (22c). According to the invention the housing unit (12a) comprises a protective compound which surrounds the circuit module (14a) leaving open at least one region (24a) that is enclosed by the protective composition on which region the at least one contact unit (20a) is arranged.

No. of Pages : 22 No. of Claims : 12

(12) PATENT APPLICATION PUBLICATION
(19) INDIA
(22) Date of filing of Application :13/09/2012
(21) Application No.8014/DELNP/2012 A
(43) Publication Date : 21/03/2014

(54) Title of the invention : DRIVE HAVING AN EMERGENCY CLOSING FUNCTION

(51) International classification :F16K31/56
(31) Priority Document No :10 2010 011 516.9
(32) Priority Date :15/03/2010
(33) Name of priority country :Germany
(86) International Application No :PCT/EP2011/000686
Filing Date :15/02/2011
(87) International Publication No :WO 2011/113510
(61) Patent of Addition to Application Number :NA
Filing Date :NA
(62) Divisional to Application Number :NA
Filing Date :NA

(71)**Name of Applicant :**
1)ROBERT BOSCH GMBH
Address of Applicant :70469 Stuttgart Germany
(72)**Name of Inventor :**
1)FR–HLICH Udo
2)TAUBER Richard
3)D–RTOLUK Ibrahim

(57) Abstract :
The invention relates to a drive having an emergency closing function comprising a movable coupling device which has an emergency spring clamped between an input side and an output side spring system. The emergency spring is preferably a compression spring moved along with the coupling device. A distance of the spring systems is defined by means of a locking device in normal operation of the drive wherein the emergency spring can relax for an emergency function or emergency movement of the drive after the locking device is released or unlocked. According to the invention the locking device is operated or can be triggered hydraulically or pneumatically and/or magnetically.

No. of Pages : 38 No. of Claims : 30

(12) PATENT APPLICATION PUBLICATION
(19) INDIA
(22) Date of filing of Application :21/09/2012
(21) Application No.8266/DELNP/2012 A
(43) Publication Date : 21/03/2014

(54) Title of the invention : REFRIGERATION APPLIANCE WITH HIDDEN USER INTERFACE

(51) International classification :F25D23/02,F25D29/00
(31) Priority Document No :12/713790
(32) Priority Date :26/02/2010
(33) Name of priority country :U.S.A.
(86) International Application No :PCT/US2011/026156
Filing Date :25/02/2011
(87) International Publication No :WO 2011/106587
(61) Patent of Addition to Application Number :NA
Filing Date :NA
(62) Divisional to Application Number :NA
Filing Date :NA

(71)**Name of Applicant :**
1)ELECTROLUX HOME PRODUCTS INC.
Address of Applicant :20445 Emerald Parkway SW Suite 250 Cleveland OH 44135 0920 U.S.A.
(72)**Name of Inventor :**
1)SCHENK Dennis
2)SIMPSON Cory Dale
3)BERTOLINI Nilton Carlos

(57) Abstract :
Provided is a refrigeration appliance including a cabinet defining a fresh food compartment and a freezer compartment. The refrigeration appliance includes a refrigeration system that is operable to provide a cooling effect to an interior of the fresh food and freezer compartments. A pair of doors is pivotally connected to the cabinet with a hinge assembly for restricting access to the interior of the fresh food compartment. Each door includes a side portion extending between an exterior face and an interior portion of the door. The side portions of the doors generally oppose each other when the doors are closed. A user interface is also provided to the side portion of at least one of the doors comprising an input device to be manipulated by a user for controlling a target temperature within at least one of the fresh food and freezer compartments.

No. of Pages : 26 No. of Claims : 21

(12) PATENT APPLICATION PUBLICATION
(19) INDIA
(22) Date of filing of Application :14/09/2012
(21) Application No.8047/DELNP/2012 A
(43) Publication Date : 21/03/2014

(54) Title of the invention : INTEGRATED ANALYTICAL SYSTEM AND METHOD

(51) International classification :G01N21/00
(31) Priority Document No :61/306235
(32) Priority Date :19/02/2010
(33) Name of priority country :U.S.A.
(86) International Application No :PCT/US2011/025537
Filing Date :18/02/2011
(87) International Publication No :WO 2011/103504
(61) Patent of Addition to Application Number :NA
Filing Date :NA
(62) Divisional to Application Number :NA
Filing Date :NA

(71)**Name of Applicant :**
1)PACIFIC BIOSCIENCES OF CALIFORNIA INC.
Address of Applicant :1380 Willow Road Menlo Park CA 94025 U.S.A.
(72)**Name of Inventor :**
1)MCCAFFREY Nathaniel Joseph
2)TURNER Stephen
3)SAXENA Ravi
4)HELGESEN Scott Edward

(57) Abstract :
An analytical assembly within a unified device structure for integration into an analytical system. The analytical assembly is scalable and includes a plurality of analytical devices each of which includes a reaction cell an optical sensor and at least one optical element positioned in optical communication with both the reaction cell and the sensor and which delivers optical signals from the cell to the sensor. Additional elements are optionally integrated into the analytical assembly. Methods for forming and operating the analytical system are also disclosed.

No. of Pages : 96 No. of Claims : 49

(12) PATENT APPLICATION PUBLICATION
(19) INDIA
(22) Date of filing of Application :14/09/2012
(21) Application No.8048/DELNP/2012 A
(43) Publication Date : 21/03/2014

(54) Title of the invention : INTEGRATED SYSTEM AND METHOD FOR ENABLING MOBILE COMMERCE TRANSACTIONS USING ACTIVE POSTERS AND CONTACTLESS IDENTITY MODULES

(51) International classification :G06Q30/00
(31) Priority Document No :12/705696
(32) Priority Date :15/02/2010
(33) Name of priority country :U.S.A.
(86) International Application No :PCT/US2010/052416
Filing Date :13/10/2010
(87) International Publication No :WO 2011/100001
(61) Patent of Addition to Application Number :NA
Filing Date :NA
(62) Divisional to Application Number :NA
Filing Date :NA

(71)**Name of Applicant :**
1)CELLULAR EXPRESS INC.
Address of Applicant :400 Trade Center Suite 2890 Woburn Massachusetts 01801 U.S.A.
(72)**Name of Inventor :**
1)RAMASWAMY DEWAKAR Sunny
2)KUMAR CHAUDHARY Parveen
3)NARKHEDE Kishor
4)BRESNAHAN Kevin

(57) Abstract :
A method integrated system and Active Poster for processing mobile touch transactions. The integration consists of an RFID device which may be standalone affixed to or part of a mobile or hand held portable wireless communication device (optionally using a Contact Less (CL) SIM) with near field communication capability an Active Poster with near field communication capability an issuer s or mobile network provider s application and a host computer with networking capability.

No. of Pages : 36 No. of Claims : 3

(12) PATENT APPLICATION PUBLICATION
(19) INDIA
(22) Date of filing of Application :14/09/2012
(21) Application No.8049/DELNP/2012 A
(43) Publication Date : 21/03/2014

(54) Title of the invention : ROTATING PARKING BRAKE CONTROL DEVICE FOR CONSTRUCTION MACHINERY

(51) International classification :E02F9/20,B60R16/023,F15B20/00
(31) Priority Document No :2010111150
(32) Priority Date :13/05/2010
(33) Name of priority country :Japan
(86) International Application No :PCT/JP2011/061016
Filing Date :13/05/2011
(87) International Publication No :WO 2011/142447
(61) Patent of Addition to Application Number :NA
Filing Date :NA
(62) Divisional to Application Number :NA
Filing Date :NA

(71)**Name of Applicant :**
1)KOMATSU LTD.
Address of Applicant :2 3 6 Akasaka Minato ku Tokyo 1078414 Japan
(72)**Name of Inventor :**
1)TAKE Hiroaki
2)MORINAGA Jun
3)AKUSHICHI Shuuki

(57) Abstract :
The disclosed rotating parking brake control device obviates the need for an operator to operate an emergency stop switch. A hybrid controller to which a brake is connected drives/controls an upper rotating body by outputting a drive/control signal to a rotating electric motor. The hybrid controller also controls the brake by generating a brake release command signal and outputting a brake release command signal to the brake. A brake release command signal is also generated in a pump controller and said brake release command signal is transmitted to the hybrid controller via an inter controller signal line. A brake release command signal is outputted to the brake only when both a brake release command signal is generated in the hybrid controller and a brake release command signal is transmitted from the pump controller via the inter controller signal line.

No. of Pages : 49 No. of Claims : 7

(12) PATENT APPLICATION PUBLICATION
(19) INDIA
(22) Date of filing of Application :21/09/2012
(21) Application No.8275/DELNP/2012 A
(43) Publication Date : 21/03/2014

(54) Title of the invention : NEW POLYESTERS FROM ASYMMETRICAL MONOMERS BASED UPON BISANHYDROHEXITOLS

(51) International classification :C08G18/00
(31) Priority Document No :61/315227
(32) Priority Date :18/03/2010
(33) Name of priority country :U.S.A.
(86) International Application No :PCT/US2011/028975
Filing Date :18/03/2011
(87) International Publication No :WO 2011/116275
(61) Patent of Addition to Application Number :NA
Filing Date :NA
(62) Divisional to Application Number :NA
Filing Date :NA

(71)**Name of Applicant :**
1)NEW JERSEY INSTITUTE OF TECHNOLOGY
Address of Applicant :University Heights Newark New Jersey 07102 1982 U.S.A.
(72)**Name of Inventor :**
1)EAST Anthony
2)JAFFE Michael
3)HAMMOND Willis
4)FENG Xianhong

(57) Abstract :
Asymmetrically substituted compounds of bisanhydrohexitols are described including the bisanhydrohexitol isosorbide. The compounds are useful as AB monomers. The synthesis of polymers from the monomers is also described.

No. of Pages : 28 No. of Claims : 24

(12) PATENT APPLICATION PUBLICATION
(19) INDIA
(22) Date of filing of Application :21/09/2012
(21) Application No.8276/DELNP/2012 A
(43) Publication Date : 21/03/2014

(54) Title of the invention : ELECTRONIC APPARATUS

(51) International classification :G06F3/048,G03B17/00,G03B17/02
(31) Priority Document No :2010058351
(32) Priority Date :15/03/2010
(33) Name of priority country :Japan
(86) International Application No :PCT/JP2010/006827
Filing Date :22/11/2010
(87) International Publication No :WO 2011/114401
(61) Patent of Addition to Application Number :NA
Filing Date :NA
(62) Divisional to Application Number :NA
Filing Date :NA

(71)**Name of Applicant :**
1)NIKON CORPORATION
Address of Applicant :12 1 Yurakucho 1 chome Chiyoda ku Tokyo 1008331 Japan
(72)**Name of Inventor :**
1)NAKAJIMA Shinichi
2)SEKIGUCHI Masakazu

(57) Abstract :
Along with the incorporation of complicated functions in electronic apparatuses the number of menu items that a user should set and the number of guide items that the user would like to refer to are becoming huge. There have been cases where the user has wandered through a hierarchical structure searching for a guide that the user wishes to refer to or a menu that the user would like to set from among the assorted menu items and guide items displayed on a display unit. Therefore disclosed is an electronic apparatus provided with: a processing unit that processes; a display unit that displays; and a control unit that when a change in biological information of the user is acquired causes the display unit to display a display image of at least one of either a guide screen or a setting screen relating to the processing of the processing unit.

No. of Pages : 40 No. of Claims : 17

(12) PATENT APPLICATION PUBLICATION
(19) INDIA
(22) Date of filing of Application :18/09/2012
(21) Application No.8141/DELNP/2012 A
(43) Publication Date : 21/03/2014

(54) Title of the invention : THERMALLY CONDUCTIVE SHEET

(51) International classification :H01L23/36,H05K7/20,H05K9/00
(31) Priority Document No :NA
(32) Priority Date :NA
(33) Name of priority country :NA
(86) International Application No :PCT/JP2010/052643
Filing Date :22/02/2010
(87) International Publication No :WO 2011/101989
(61) Patent of Addition to Application Number :NA
Filing Date :NA
(62) Divisional to Application Number :NA
Filing Date :NA

(71)**Name of Applicant :**
1)DEXERIALS CORPORATION
Address of Applicant :Gate City Osaki East Tower 8F 1 11 2 Osaki Shinagawa ku Tokyo 1410032 Japan
(72)**Name of Inventor :**
1)KUBO Yusuke
2)KUMURA Tatsuo
3)KATO Yoshihiro
4)SUZUKI Kazuhiko

(57) Abstract :
The disclosed thermally conductive sheet which is excellent in both the functions of thermal conductivity and electromagnetic wave suppression attributes is provided by causing the high packing of magnetic metal particles and thermally conductive particles of which the thermal conductivity is more favorable than that of the magnetic metal particles. The thermally conductive sheet (11) which is disposed between an electronic component (14) and a metallic radiator member (12) that radiates the heat given off by the electronic component (14) is characterized: by comprising a flexible resin containing both spherical magnetic metal particles that absorb electromagnetic waves emitted from the electronic component (14) and thermally conductive particles that have a higher thermal conductivity than the magnetic metal particles; by the average particle size of the magnetic metal particles being greater than the average particle size of the thermally conductive particles; and by the volume fraction of the magnetic metal particles in said thermally conductive sheet being at least 55 vol%.

No. of Pages : 39 No. of Claims : 5

(12) PATENT APPLICATION PUBLICATION
(19) INDIA
(22) Date of filing of Application :21/09/2012
(21) Application No.8260/DELNP/2012 A
(43) Publication Date : 21/03/2014

(54) Title of the invention : FILLER FOR AFFINITY CHROMATOGRAPHY AND METHOD FOR ISOLATING IMMUNOGLOBULIN

(51) International classification	:C07K17/08,C07K1/22,C07K19/00
(31) Priority Document No	:2010068794
(32) Priority Date	:24/03/2010
(33) Name of priority country	:Japan
(86) International Application No	:PCT/JP2011/056871
Filing Date	:23/03/2011
(87) International Publication No	:WO 2011/118599
(61) Patent of Addition to Application Number	:NA
Filing Date	:NA
(62) Divisional to Application Number	:NA
Filing Date	:NA

(71)**Name of Applicant :**
1)JSR CORPORATION
Address of Applicant :9 2 Higashi Shinbashi 1 chome Minato ku Tokyo 1058640 Japan
(72)**Name of Inventor :**
1)TAMORI Kouji
2)FUKUTA Tetsuo
3)MIYAJI Masaaki
4)WANG Yong
5)ABE Takayoshi
6)OKANO Yusuke
7)MOMIYAMA Masaki
8)KAWAI Takahiro

(57) Abstract :
Provided are a filler for affinity chromatography which has excellent alkali resistance, and a method for isolating immunoglobulin. The filler for affinity chromatography is a filler in which a protein represented by the following formula (1) is immobilized on a carrier. R-R2 (1) wherein R represents an amino acid sequence consisting of 4 to 300 amino acid residues containing a region consisting of 4 to 20 contiguous histidine residues; and R2 represents an amino acid sequence capable of binding to immunoglobulin, the amino acid sequence consisting of 50 to 500 amino acid residues containing Z domain of Protein A or a fragment thereof, or a variant thereof, provided that the R binds to C-terminus or N-terminus of the R2.

No. of Pages : 40 No. of Claims : 4

(12) PATENT APPLICATION PUBLICATION
(19) INDIA
(22) Date of filing of Application :21/09/2012
(21) Application No.8261/DELNP/2012 A
(43) Publication Date : 21/03/2014

(54) Title of the invention : IMPREGNATED CARBON FOR WATER TREATMENT

(51) International classification :C02F1/28
(31) Priority Document No :NA
(32) Priority Date :NA
(33) Name of priority country :NA
(86) International Application No :PCT/US2010/028118
Filing Date :22/03/2010
(87) International Publication No :WO 2011/119141
(61) Patent of Addition to Application Number :NA
Filing Date :NA
(62) Divisional to Application Number :NA
Filing Date :NA

(71)**Name of Applicant :**
1)SURFATAS L.L.C.
Address of Applicant :12200 Herbert Wayne Court Suite 185 Huntersville NC 28078 U.S.A.
(72)**Name of Inventor :**
1)VEST Kenn R.
2)PATIL Arvind S.

(57) Abstract :
A method for treating aqueous solutions wherein a filtrate material is manufactured to have a polymer with ion exchange properties adhered to the surface or impregnated within a porous granular particle such that the resultant structure does not result in any agglomeration or binding of the granular particles thereby retaining the maximum surface area of the particle for reacting with metal impurities in solution. A filtrate material comprised of a porous granulated particle and an ion exchange polymer. A method of treating aqueous solutions by passing an aqueous solution through the filtrate material to remove metal impurities in the solution. A method of regenerating the filtrate material that is saturated with metal impurities.

No. of Pages : 26 No. of Claims : 33

(12) PATENT APPLICATION PUBLICATION
(19) INDIA
(22) Date of filing of Application :21/09/2012
(21) Application No.8263/DELNP/2012 A
(43) Publication Date : 21/03/2014

(54) Title of the invention : SOLAR CONTROL COATINGS WITH DISCONTINUOUS METAL LAYER

(51) International classification :C03C17/36
(31) Priority Document No :61/318471
(32) Priority Date :29/03/2010
(33) Name of priority country :U.S.A.
(86) International Application No :PCT/US2011/030235
Filing Date :29/03/2011
(87) International Publication No :WO 2011/123402
(61) Patent of Addition to Application Number :NA
Filing Date :NA
(62) Divisional to Application Number :NA
Filing Date :NA

(71)**Name of Applicant :**
1)PPG INDUSTRIES OHIO INC.
Address of Applicant :3800 West 143rd Street Cleveland Ohio 44111 U.S.A.
(72)**Name of Inventor :**
1)POLCYN Adam D.
2)WAGNER Andrew V.
3)BUHAY Harry
4)BHANDARI Abhinav
5)FINLEY James J.
6)OHODNICKI Jr. Paul R.
7)OSHAUGHNESSY Dennis J.
8)BENIGNI Jeffrey A.
9)MEDWICK Paul A.
10)THIEL James P.

(57) Abstract :
An architectural transparency includes a substrate a first dielectric layer formed over at least a portion of the substrate a continuous metallic layer formed over at least a portion of the first dielectric layer a second dielectric layer formed over at least a portion of the first metallic layer and a subcritical metallic layer formed over at least a portion of the second dielectric layer such that the subcritical metallic layer forms discontinuous metallic regions.

No. of Pages : 42 No. of Claims : 18

(12) PATENT APPLICATION PUBLICATION
(19) INDIA
(22) Date of filing of Application :14/09/2012
(21) Application No.8068/DELNP/2012 A
(43) Publication Date : 21/03/2014

(54) Title of the invention : SYSTEM AND METHOD OF PREPARING AND STORING ACTIVATED MATURE DENDRITIC CELLS

(51) International classification :A61K39/00
(31) Priority Document No :61/313984
(32) Priority Date :15/03/2010
(33) Name of priority country :U.S.A.
(86) International Application No :PCT/US2011/028487
Filing Date :15/03/2011
(87) International Publication No :WO 2011/115970
(61) Patent of Addition to Application Number :NA
Filing Date :NA
(62) Divisional to Application Number :NA
Filing Date :NA

(71)**Name of Applicant :**
1)THE TRUSTEES OF THE UNIVERSITY OF PENNSYLVANIA
Address of Applicant :Center for Technology Transfer 3160 Chestnut Street Suite 200 Philadelphia PA 19104 6283 U.S.A.
(72)**Name of Inventor :**
1)CZERNIECKI Brian J.
2)KOLDOVSKY Ursula
3)XU Shuwen
4)KOSKI Gary K.

(57) Abstract :
The present invention provides compositions and methods for generating and cryopreserving dendritic cells with superior functionality in producing stronger signals to T cells resulting in a more potent DC based anti tumor vaccine. The present invention includes mature antigen loaded DCs activated by Toll like receptor agonists that induce clinically effective immune responses preferably when used earlier in the disease process. The DCs of the present invention produce desirable levels of cytokines and chemokines and further have the capacity to induce apoptosis of tumor cells The cells can be cryopreserved and thawed for later use thereby reducing the need for repeated pheresis and elutriation processes during vaccine production These methods can also be utilized to directly target molecules involved in carcinogenetic signaling pathways and cancer stem cells.

No. of Pages : 61 No. of Claims : 30

(12) PATENT APPLICATION PUBLICATION
(19) INDIA
(22) Date of filing of Application :14/09/2012
(21) Application No.8069/DELNP/2012 A
(43) Publication Date : 21/03/2014

(54) Title of the invention : APPARATUS FOR REMOVING SUBSTANCES FROM CATALYST SURFACE

(51) International classification :B01J23/90,B01J23/28,B01J38/04
(31) Priority Document No :2010105511
(32) Priority Date :30/04/2010
(33) Name of priority country :Japan
(86) International Application No :PCT/JP2011/060157
Filing Date :26/04/2011
(87) International Publication No :WO 2011/136217
(61) Patent of Addition to Application Number :NA
Filing Date :NA
(62) Divisional to Application Number :NA
Filing Date :NA

(71)**Name of Applicant :**
1)Asahi Kasei Chemicals Corporation
Address of Applicant :1 105 Kanda Jinbocho Chiyoda ku Tokyo 1018101 Japan
(72)**Name of Inventor :**
1)ISHII Yusuke
2)FURUYA Yasuaki
3)FUKUZONO Toshihiko

(57) Abstract :
Provided is an apparatus for efficiently removing substances (catalyst surface substances) exuding from and/or attached to a catalyst surface. An apparatus which is provided with a main body and which removes catalyst surface substances from the surface of a catalyst by bringing the catalyst stored in the main body into contact with airflow wherein the length of the airflow in the airflow direction is 55 mm or greater and the average flow velocity of the airflow is 80 m/s to 500 m/s when calculated as a linear velocity at 15°C and 1 atm.

No. of Pages : 68 No. of Claims : 9

(12) PATENT APPLICATION PUBLICATION
(19) INDIA
(22) Date of filing of Application :14/09/2012
(21) Application No.8070/DELNP/2012 A
(43) Publication Date : 21/03/2014

(54) Title of the invention : KINASE INHIBITORS AND METHOD OF TREATING CANCER WITH SAME

(51) International classification :C07D413/14,A61K31/5377,A61P35/00
(31) Priority Document No :PCT/CA2010/000518
(32) Priority Date :06/04/2010
(33) Name of priority country :Canada
(86) International Application No :PCT/CA2011/000386
Filing Date :06/04/2011
(87) International Publication No :WO 2011/123946
(61) Patent of Addition to Application Number :NA
Filing Date :NA
(62) Divisional to Application Number :NA
Filing Date :NA

(71)**Name of Applicant :**
1)UNIVERSITY HEALTH NETWORK
Address of Applicant :190 Elizabeth Street Toronto Ontario M5G 2C4 Canada
(72)**Name of Inventor :**
1)SAMPSON Peter Brent
2)LIU Yong
3)LI Sze Wan
4)FORREST Bryan T.
5)PAULS Heinz W.
6)EDWARDS Louise G.
7)FEHER Miklos
8)PATEL Narendra Kumar B.
9)LAUFER Radoslaw
10)PAN Guohua

(57) Abstract :
The invention is directed to a compound represented by the following structural formula and pharmaceutically acceptable salts thereof: (I). Compounds represented by this structural formula are kinase inhibitors and are therefore disclosed herein for the treatment of cancer. Definitions for the variables in the structural formula are provided herein.

No. of Pages : 169 No. of Claims : 23

(12) PATENT APPLICATION PUBLICATION
(19) INDIA
(22) Date of filing of Application :21/09/2012
(21) Application No.8284/DELNP/2012 A
(43) Publication Date : 21/03/2014

(54) Title of the invention : ELECTROCHEMICAL HYDROGEN CATALYST POWER SYSTEM

(51) International classification :H01M8/22,H01M14/00,G21B3/00
(31) Priority Document No :61/315186
(32) Priority Date :18/03/2010
(33) Name of priority country :U.S.A.
(86) International Application No :PCT/US2011/028889
Filing Date :17/03/2011
(87) International Publication No :WO 2011/116236
(61) Patent of Addition to Application Number :NA
Filing Date :NA
(62) Divisional to Application Number :NA
Filing Date :NA

(71)**Name of Applicant :**
1)BLACKLIGHT POWER INC.
Address of Applicant :493 Old Trenton Road Cranbury NJ 08512 U.S.A.
(72)**Name of Inventor :**
1)MILLS Randell L.

(57) Abstract :
An electrochemical power system is provided that generates an electromotive force (EMF) from the catalytic reaction of hydrogen to lower energy (hydrino) states providing direct conversion of the energy released from the hydrino reaction into electricity the system comprising at least two components chosen from: a catalyst or a source of catalyst; atomic hydrogen or a source of atomic hydrogen; reactants to form the catalyst or source of catalyst and atomic hydrogen or source of atomic hydrogen and one or more reactants to initiate the catalysis of atomic hydrogen. The electrochemical power system for forming hydrinos and electricity can farther comprise a cathode compartment comprising a cathode an anode compartment comprising an anode optionally a salt bridge reactants that constitute hydrino reactants during cell operation with separate electron flow and ion mass transport and a source of hydrogen. Due to oxidation reduction cell half reactions the hydrino producing reaction mixture is constituted with the migration of electrons through an external circuit and ion mass transport through a separate path such as the electrolyte to complete an electrical circuit. A power source and hydride reactor is further provided that powers a power system comprising (i) a reaction cell for the catalysis of atomic hydrogen to form hydrinos (ii) a chemical fuel mixture comprising at least two components chosen from; a source of catalyst or catalyst; a source of atomic hydrogen or atomic hydrogen reactants to form the source of catalyst or catalyst and a source of atomic hydrogen or atomic hydrogen; one or more reactants to initiate the catalysis of atomic hydrogen; and a support to enable the catalysis (iii) thermal systems for reversing an exchange reaction So thermally regenerate the fuel from the reaction products (iv) a heat sink that accepts the heat from the power producing reactions and (v) a power conversion system.

No. of Pages : 370 No. of Claims : 15

(12) PATENT APPLICATION PUBLICATION
(19) INDIA
(22) Date of filing of Application :18/09/2012
(21) Application No.8147/DELNP/2012 A
(43) Publication Date : 21/03/2014

(54) Title of the invention : CAMERA TRANSPORT SYSTEM

(51) International classification :G03B17/56,G03B17/02
(31) Priority Document No :61/306,351
(32) Priority Date :19/02/2010
(33) Name of priority country :U.S.A.
(86) International Application No :PCT/US2011/025553
Filing Date :18/02/2011
(87) International Publication No :WO 2011/103511
(61) Patent of Addition to Application Number :NA
Filing Date :NA
(62) Divisional to Application Number :NA
Filing Date :NA

(71)**Name of Applicant :**
1)BLACK RAPID INC.
Address of Applicant :315 North 36th Street Suite 201 Seattle WA 98103 U.S.A.
(72)**Name of Inventor :**
1)KOPE Tyler R. M.
2)HENRY Ronald D.
3)GUNNERSEN Carrie A.
4)PETERSON Kurt K.

(57) Abstract :
A camera carrying enclosure for use with a camera having an engagement member. The enclosure includes a shoulder strap and a camera attachment strap with one end thereof slidably attached to the shoulder strap and the other end attachable to the camera or similar device. The enclosure permits the user to transition the camera from a secured transport position to a secured operating position. The enclosure is configurable to provide several manners of transporting the camera. A wrist strap is selectively connectable to the enclosure or the camera.

No. of Pages : 32 No. of Claims : 19

(12) PATENT APPLICATION PUBLICATION
(19) INDIA
(22) Date of filing of Application :18/09/2012
(21) Application No.8148/DELNP/2012 A
(43) Publication Date : 21/03/2014

(54) Title of the invention : USE OF ACHROMOPEPTIDASE FOR LYSIS AT ROOM TEMPERATURE

(51) International classification :C12N15/10,C12Q1/68,C12S3/20
(31) Priority Document No :61/314,318
(32) Priority Date :16/03/2010
(33) Name of priority country :U.S.A.
(86) International Application No :PCT/US2011/028494
Filing Date :15/03/2011
(87) International Publication No :WO 2011/115975
(61) Patent of Addition to Application Number :NA
Filing Date :NA
(62) Divisional to Application Number :NA
Filing Date :NA

(71)**Name of Applicant :**
1)BECTON DICKINSON AND COMPANY
Address of Applicant :1 Becton Drive Franklin Lakes NJ 07417 U.S.A.
(72)**Name of Inventor :**
1)HILLIGOSS Danielle
2)KELLER Lisa M.
3)RAMADAN Samah
4)COADY Jamie
5)HELLYER Tobin J.

(57) Abstract :
A process for detecting the presence or absence of gram positive bacteria in a biological sample. The biological sample can be obtained from any mammal and contains at a minimum cellular components. The sample is combined with an enzymatic lysing agent such as achromopeptidase and lysed at room temperature. Ferric oxide is then added to the sample containing achromopeptidase. A magnetic field is applied to the sample and nucleic acids are extracted from the cellular components. Target nucleic acids if present are amplified using techniques such as Polymerase Chain Reaction (PCR) and then used to detect the presence or absence of gram positive bacteria. Staphylococcus aureus and Streptococcus agalactiae are examples of target bacteria detected by the methods of the present invention.

No. of Pages : 30 No. of Claims : 22

(12) PATENT APPLICATION PUBLICATION
(19) INDIA
(22) Date of filing of Application :18/09/2012
(21) Application No.8149/DELNP/2012 A
(43) Publication Date : 21/03/2014

(54) Title of the invention : COMPOUNDS FOR THE TREATMENT OF RENAL CELL CARCINOMA

(51) International classification :A61K31/195
(31) Priority Document No :1002773.8
(32) Priority Date :18/02/2010
(33) Name of priority country :U.K.
(86) International Application No :PCT/GB2011/050313
Filing Date :17/02/2011
(87) International Publication No :WO 2011/101677
(61) Patent of Addition to Application Number :NA
Filing Date :NA
(62) Divisional to Application Number :NA
Filing Date :NA

(71)**Name of Applicant :**
1)MYROVLYTIS TECHNOLOGY VENTURES LIMITED
Address of Applicant :First Floor 26 Cadogan Square London SW1X 0JP U.K.
(72)**Name of Inventor :**
1)MAHER Eamonn
2)LU Xiaohong

(57) Abstract :
A composition comprising mithramycin or a pharmaceutically acceptable salt or solvate thereof for use in the treatment of renal cell carcinoma. In particular the composition is suitable for use in the treatment of clear cell renal cell carcinoma. The composition is particularly useful for use in the treatment of renal cell carcinoma associated with Von Hippel Lindau disease or Birt Hogg Dub syndrome. A composition comprising mithramycin or a pharmaceutically acceptable salt or solvate thereof for use as a cytotoxic agent against FLCN null or VHL null renal cell carcinoma cells.

No. of Pages : 37 No. of Claims : 14

(12) PATENT APPLICATION PUBLICATION
(19) INDIA
(22) Date of filing of Application :21/09/2012
(21) Application No.8296/DELNP/2012 A
(43) Publication Date : 21/03/2014

(54) Title of the invention : REDUCED POWER CONSUMPTION IN A WIRELESS COMMUNICATION SYSTEM WHILE PROVIDING ADEQUATE DIRECTIONAL RADIO COVERAGE

(51) International classification :H04B7/06
(31) Priority Document No :NA
(32) Priority Date :NA
(33) Name of priority country :NA
(86) International Application No :PCT/SE2010/050554
Filing Date :21/05/2010
(87) International Publication No :WO 2011/145990
(61) Patent of Addition to Application Number :NA
Filing Date :NA
(62) Divisional to Application Number :NA
Filing Date :NA

(71)**Name of Applicant :**
1)Telefonaktiebolaget LM Ericsson (publ)
Address of Applicant :S 164 83 Stockholm Sweden
(72)**Name of Inventor :**
1)LARSSON Peter

(57) Abstract :
There is provided an arrangement for a wireless communication system that includes a set of power amplifiers (10 1 10 2 10 3) and a set of antennas (20 1 20 2 20 3) based on which at least two different configurations are provided including a first configuration (1) of power amplifiers and antennas and a second configuration (2) of power amplifier(s) and antennas. The arrangement also includes switching circuitry (40) configured to switch between the configurations. The second configuration employs a smaller number of power amplifiers than the first configuration and the second configuration has fewer power amplifiers than antennas where at least one power amplifier is connected to at least two antennas via respective antenna branches that are configured with different delays as represented by delay elements (30 1 30 2). A difference in delay between a pair of these antenna branches is based on a measure representative of the inverse bandwidth of a signal to be transmitted through the antennas.

No. of Pages : 48 No. of Claims : 18

(12) PATENT APPLICATION PUBLICATION
(19) INDIA
(22) Date of filing of Application :12/09/2012
(21) Application No.7969/DELNP/2012 A
(43) Publication Date : 21/03/2014

(54) Title of the invention : AUTONOMOUS SYSTEM FOR POSITIONING BY PSEUDOLITES IN A CONSTRAINED ZONE AND METHOD OF IMPLEMENTATION

(51) International classification :G01S19/11
(31) Priority Document No :10/00999
(32) Priority Date :12/03/2010
(33) Name of priority country :France
(86) International Application No :PCT/EP2011/051525
Filing Date :03/02/2011
(87) International Publication No :WO 2011/110385
(61) Patent of Addition to Application Number :NA
Filing Date :NA
(62) Divisional to Application Number :NA
Filing Date :NA

(71)**Name of Applicant :**
1)THALES
Address of Applicant :45 rue de Villiers F 92200 Neuilly sur Seine France
(72)**Name of Inventor :**
1)VAN DEN BOSSCHE Mathias

(57) Abstract :
The subject of the present invention is a system for positioning an object in a constrained zone comprising: a set of pseudolites distributed in said constrained zone and each exhibiting a spreading code corresponding to the spreading code of a satellite belonging to a constellation of satellites of a satellite navigation system said constellation of satellites comprising at least one first set of satellites (S1) and one second set of satellites (S2)of disjoint visibility and a receiver situated on the object to be located the pseudolites being distributed in the constrained zone in such a way that at any point of the constrained zone it is possible for the receiver of the object to acquire the positioning signals of at least two pseudolites exhibiting spreading codes corresponding for the one to a satellite of the first set (S1) and for the other to a satellite of the second set (S2) in such a way that the receiver receiving these positioning signals detects the impossibility of them being signals emitted by satellites of the constellation of satellites and consequently determines in a totally autonomous manner that it is receiving positioning signals emitted by pseudolites.

No. of Pages : 15 No. of Claims : 9

(12) PATENT APPLICATION PUBLICATION
(19) INDIA
(22) Date of filing of Application :21/09/2012
(21) Application No.8290/DELNP/2012 A
(43) Publication Date : 21/03/2014

(54) Title of the invention : DOCUMENT MANAGEMENT SYSTEM , EVALUATION DEVICE, DATA OUTPUT CONTROL DEVICE, DOCUMENT MANAGEMENT METHOD AND DOCUMENT MANAGEMENT PROGRAM

(51) International classification :G06F21/24,G06Q10/00
(31) Priority Document No :2010081315
(32) Priority Date :31/03/2010
(33) Name of priority country :Japan
(86) International Application No :PCT/JP2011/058191
Filing Date :31/03/2011
(87) International Publication No :WO 2011/125828
(61) Patent of Addition to Application Number :NA
Filing Date :NA
(62) Divisional to Application Number :NA
Filing Date :NA

(71)**Name of Applicant :**
1)Kabushiki Kaisha Toshiba
Address of Applicant :1 1 Shibaura 1 chome Minato ku Tokyo 1058001 Japan
2)TOSHIBA SOLUTIONS CORPORATION
(72)**Name of Inventor :**
1)Miyazaki Shingo
2)Akimoto Makoto
3)Ikeda Tatsuro
4)Morijiri Tomoaki
5)Okamoto Toshio

(57) Abstract :
Disclosed is a document management system comprising an information acquisition unit (security operation device) (400) for acquiring a management ID which is identification information of original document data which is digital data of a paper document or identification information of replica data of the original document data using the management ID to acquire document type information which is information related to the type of the paper document from a storage unit and outputting the document type information. In addition the disclosed document management system comprises a policy selection and assessment unit (600) for acquiring operating information which is information for identifying the type of operation for the original document data or the replica data user information which is information related to a user and the document type information; selecting policy information in which the operating range of the user has been defined on the basis of the document type information; and assessing whether or not the user defined by the user information has authorization to execute an operation defined in the operating information in accordance with the definition of the selected policy information.

No. of Pages : 59 No. of Claims : 9

(12) PATENT APPLICATION PUBLICATION
(19) INDIA
(22) Date of filing of Application :21/09/2012
(21) Application No.8291/DELNP/2012 A
(43) Publication Date : 21/03/2014

(54) Title of the invention : STEREO CAMERA WITH PRESET MODES

(51) International classification :G03B35/00
(31) Priority Document No :12/752088
(32) Priority Date :31/03/2010
(33) Name of priority country :U.S.A.
(86) International Application No :PCT/US2011/030369
Filing Date :29/03/2011
(87) International Publication No :WO 2011/123455
(61) Patent of Addition to Application Number :NA
Filing Date :NA
(62) Divisional to Application Number :NA
Filing Date :NA

(71)**Name of Applicant :**
1)WATERDANCE INC.
Address of Applicant :2117 W. Empire Ave. Burbank California 91504 U.S.A.
(72)**Name of Inventor :**
1)CAMPBELL Patrick
2)PACE Vincent

(57) Abstract :
There is disclosed a stereographic camera system and method. A stereographic camera may include a left camera and a right camera including respective lenses and an interface for receiving a selection of a selected mode from a plurality of preset operating modes. One or more preset stereo parameters associated with each of the plurality of operating modes may be stored in a preset parameter memory. An interocular distance mechanism may set an interocular distance between the left camera and the right camera based on at least in part the one or more preset stereo parameters associated with the selected mode.

No. of Pages : 41 No. of Claims : 29

(12) PATENT APPLICATION PUBLICATION
(19) INDIA
(22) Date of filing of Application :18/09/2012
(21) Application No.8128/DELNP/2012 A
(43) Publication Date : 21/03/2014

(54) Title of the invention : ABRASIVE TOOL AND A METHOD FOR FINISHING COMPLEX SHAPES IN WORKPIECES

(51) International classification :B24D3/02,B24D3/06
(31) Priority Document No :61/371,581
(32) Priority Date :06/08/2010
(33) Name of priority country :U.S.A.
(86) International Application No :PCT/US2011/046805
Filing Date :05/08/2011
(87) International Publication No :WO 2012/019131
(61) Patent of Addition to Application Number :NA
Filing Date :NA
(62) Divisional to Application Number :NA
Filing Date :NA

(71)**Name of Applicant :**
1)SAINT GOBAIN ABRASIVES INC.
Address of Applicant :One New Bond Street Worcester Massachusetts 01615 0138 U.S.A.
2)SAINT GOBAIN ABRASIFS
(72)**Name of Inventor :**
1)BESSE John R.
2)GRAHAM David C.
3)SUBRAMANIAN Krishnamoorthy
4)RAMANATH Srinivasan
5)LAMOUREUX Marc A.

(57) Abstract :
An abrasive tool includes a bonded abrasive body having abrasive grains contained within a bonding material wherein the bonded abrasive body comprises a complex shape having a form depth (FD) of at least about 0.3. The form depth is described by the equation [(Rl Rs)/Rl] wherein Rs is a smallest radius (Rs) at a point along the longitudinal axis of the bonded abrasive body and Rl is a largest radius (Rl) at a point along the longitudinal axis of the bonded abrasive body. The abrasive tool can be used to finish complex shapes in workpieces.

No. of Pages : 28 No. of Claims : 56

(12) PATENT APPLICATION PUBLICATION
(19) INDIA
(22) Date of filing of Application :18/09/2012
(21) Application No.8129/DELNP/2012 A
(43) Publication Date : 21/03/2014

(54) Title of the invention : COST REDUCED VARIABLE GEOMETRY TURBOCHARGER WITH STAMPED ADJUSTMENT RING ASSEMBLY

(51) International classification	:F02B37/24,F02B37/22,F01D17/16
(31) Priority Document No	:61/310,019
(32) Priority Date	:03/03/2010
(33) Name of priority country	:U.S.A.
(86) International Application No	:PCT/US2011/025835
Filing Date	:23/02/2011
(87) International Publication No	:WO 2011/109198
(61) Patent of Addition to Application Number	:NA
Filing Date	:NA
(62) Divisional to Application Number	:NA
Filing Date	:NA

(71)**Name of Applicant :**
1)BORGWARNER INC.
Address of Applicant :Patent Department 3850 Hamlin Road Auburn Hills Michigan 48326 U.S.A.
(72)**Name of Inventor :**
1)MAYERNICK Nicholas
2)VEMULA Rajendra

(57) Abstract :
A variable geometry turbocharger is simplified yet able to reliably operate in a robust cost effective manner. The adjusting ring assembly has a reduced number of parts in the vane adjusting assembly but still operates as it did with the parts in the conventional assembly but at lower part and capital cost. The adjusting ring is constrained axially and radially by interaction with an inner diameter and an abutment provided in the upper vane ring of the vane pack.

No. of Pages : 25 No. of Claims : 15

(12) PATENT APPLICATION PUBLICATION
(19) INDIA
(22) Date of filing of Application :24/09/2012
(21) Application No.8320/DELNP/2012 A
(43) Publication Date : 21/03/2014

(54) Title of the invention : METAL PLATE ROLLING MACHINE AND ROLLING METHOD

(51) International classification :B21B13/14,B21B29/00,B21B37/38
(31) Priority Document No :2010-084053
(32) Priority Date :31/03/2010
(33) Name of priority country :Japan
(86) International Application No :PCT/JP2011/050784
Filing Date :12/01/2011
(87) International Publication No :WO 2011/122069
(61) Patent of Addition to Application Number :NA
Filing Date :NA
(62) Divisional to Application Number :NA
Filing Date :NA

(71)**Name of Applicant :**
1)NIPPON STEEL & SUMITOMO MATAL CORPORATION
Address of Applicant :6-1 MARUNOUCHI 2 CHOME CHIYODA KU TOKYO 1008071, JAPAN
(72)**Name of Inventor :**
1)OGAWA Shigeru
2)HIGO Tsuyoshi
3)HISATSUNE Takashi

(57) Abstract :
Provided is a rolling machine such that openings between upper and lower work rolls can be set to be large and that strong and highly responsive force can be provided. For this purpose the rolling machine which is for use for metal plates comprises a pair of work rolls consisting of an upper work roll and a lower work roll; and a pair of reinforcing rolls consisting of an upper reinforcing roll and a lower reinforcing roll which support the upper work roll and the lower work roll respectively. The rolling machine for use for metal plates is characterized in that hydraulic cylinders which impose increasing bending forces on the upper and lower work rolls respectively are disposed on projecting blocks which protrude into a rolling machine housing that the rolling direction force imposed on the trunk section of the lower work roll is supported by the contact surfaces between the projecting blocks and a lower work roll chock and that the rolling direction force imposed on the trunk section of the upper work roll is supported by the contact surfaces between an upper work roll chock and a rolling machine housing window located above the projecting blocks.

No. of Pages : 44 No. of Claims : 6

(12) PATENT APPLICATION PUBLICATION
(19) INDIA
(22) Date of filing of Application :24/09/2012
(21) Application No.8321/DELNP/2012 A
(43) Publication Date : 21/03/2014

(54) Title of the invention : METHOD FOR PRODUCING MONOCYCLIC AROMATIC HYDROCARBON

(51) International classification :C10G47/20,B01J23/08,B01J29/40
(31) Priority Document No :2010-071743
(32) Priority Date :26/03/2010
(33) Name of priority country :Japan
(86) International Application No :PCT/JP2011/057299
Filing Date :25/03/2011
(87) International Publication No :WO 2011/118753
(61) Patent of Addition to Application Number :NA
Filing Date :NA
(62) Divisional to Application Number :NA
Filing Date :NA

(71)**Name of Applicant :**
1)JX Nippon Oil & Energy Corporation
Address of Applicant :6 3 Otemachi 2 chome Chiyoda ku Tokyo 1008162 Japan
(72)**Name of Inventor :**
1)YANAGAWA Shinichiro
2)KOBAYASHI Masahide

(57) Abstract :
Disclosed is a method for producing a monocyclic aromatic hydrocarbon wherein a monocyclic aromatic hydrocarbon having 6 8 carbon atoms is produced from a starting material oil that has a 10 volume percent distillation temperature of 140°C or more and a 90 volume percent distillation temperature of 380°C or less. The method for producing a monocyclic aromatic hydrocarbon comprises: a decomposition and reforming reaction step wherein a product that contains a monocyclic aromatic hydrocarbon having 6 8 carbon atoms is obtained from the starting material oil; a refining and collection step wherein the monocyclic aromatic hydrocarbon having 6 8 carbon atoms separated from the above mentioned product is refined and collected; a hydrogenation reaction step wherein a heavy distillate fraction separated from the above mentioned product and having 9 or more carbon atoms is hydrogenated; and a recycling step wherein the hydrogenation reaction product of the heavy distillate fraction obtained in the hydrogenation reaction step is returned to the decomposition and reforming reaction step.

No. of Pages : 56 No. of Claims : 11

(12) PATENT APPLICATION PUBLICATION
(19) INDIA
(22) Date of filing of Application :18/09/2012
(21) Application No.8163/DELNP/2012 A
(43) Publication Date : 21/03/2014

(54) Title of the invention : COMBINATION COMPRISING A CYCLIN DEPENDENT KINASE 4 OR CYCLIN DEPENDENT KINASE (CDK4/6) INHIBITOR AND AN MTOR INHIBITOR FOR TREATING CANCER

(51) International classification :A61K31/436,A61K31/519,A61K45/06
(31) Priority Document No :61/323,541
(32) Priority Date :13/04/2010
(33) Name of priority country :U.S.A.
(86) International Application No :PCT/US2011/032062
Filing Date :12/04/2011
(87) International Publication No :WO 2011/130232
(61) Patent of Addition to Application Number :NA
Filing Date :NA
(62) Divisional to Application Number :NA
Filing Date :NA

(71)**Name of Applicant :**
1)NOVARTIS AG
Address of Applicant :Lichtstrasse 35 CH 4056 Basel Switzerland
(72)**Name of Inventor :**
1)BORLAND Maria
2)BRAIN Christopher Thomas
3)DOSHI Shivang
4)KIM Sunkyu
5)MA Jianguo
6)MURTIE Josh
7)ZHANG Hong

(57) Abstract :
A combination of a CDK4/6 inhibitor and an mTOR inhibitor for the treatment of cancer.

No. of Pages : 104 No. of Claims : 52

(12) PATENT APPLICATION PUBLICATION
(19) INDIA
(22) Date of filing of Application :24/09/2012
(21) Application No.8313/DELNP/2012 A
(43) Publication Date : 21/03/2014

(54) Title of the invention : PROCESS FOR THE PRODUCTION OF RUBBER IONOMERS AND POLYMER NANOCOMPOSITES

(51) International classification :C08C19/12,C08F6/10,C08F8/20
(31) Priority Document No :10157591.8
(32) Priority Date :24/03/2010
(33) Name of priority country :EPO
(86) International Application No :PCT/EP2011/054411
Filing Date :23/03/2011
(87) International Publication No :WO 2011/117277
(61) Patent of Addition to Application Number :NA
Filing Date :NA
(62) Divisional to Application Number :NA
Filing Date :NA

(71)**Name of Applicant :**
1)LANXESS International SA
Address of Applicant :Route Louis Braille 12 CH 1763 Granges Paccot Switzerland
(72)**Name of Inventor :**
1)KIRCHHOFF Jrg
2)FELLER Rolf
3)WAGNER Paul
4)PAUL Hanns Ingolf
5)GRONOWSKI Adam
6)LOVEGROVE John
7)MAGILL Phil
8)ADKINSON Dana

(57) Abstract :
The invention relates to an energy efficient environmentally favourable process for preparing water and solvent free rubber ionomers and/or polymer nanocomposites comprising said rubber ionomers.

No. of Pages : 48 No. of Claims : 24

(12) PATENT APPLICATION PUBLICATION
(19) INDIA
(22) Date of filing of Application :24/09/2012
(21) Application No.8314/DELNP/2012 A
(43) Publication Date : 21/03/2014

(54) Title of the invention : PROCESS FOR THE PRODUCTION OF WATER AND SOLVENT FREE POLYMERS

(51) International classification :B29C47/50,B29C47/56,C08C2/00
(31) Priority Document No :10003141.8
(32) Priority Date :24/03/2010
(33) Name of priority country :EPO
(86) International Application No :PCT/EP2011/054415
Filing Date :23/03/2011
(87) International Publication No :WO 2011/117280
(61) Patent of Addition to Application Number :NA
Filing Date :NA
(62) Divisional to Application Number :NA
Filing Date :NA

(71)**Name of Applicant :**
1)LANXESS International SA
Address of Applicant :Route Louis Braille 12 CH 1763 Granges Paccot Switzerland
(72)**Name of Inventor :**
1)KIRCHHOFF Jrg
2)B„CKER Werner
3)FELLER Rolf
4)WAGNER Paul
5)PAUL Hanns Ingolf
6)LOVEGROVE John

(57) Abstract :
The present invention relates to water and solvent free polymers in particular water and solvent free synthetic rubber products like non halogenated and halogenated butyl rubber products as well as a process for the production thereof. The invention further relates to a device suitable to accomplish said process.

No. of Pages : 53 No. of Claims : 17

(12) PATENT APPLICATION PUBLICATION
(19) INDIA
(22) Date of filing of Application :24/09/2012
(21) Application No.8315/DELNP/2012 A
(43) Publication Date : 21/03/2014

(54) Title of the invention : ISOTOPE SPECIFIC SEPARATION AND VITRIFICATION USING ION SPECIFIC MEDIA

(51) International classification :G21C19/42
(31) Priority Document No :61/312,029
(32) Priority Date :09/03/2010
(33) Name of priority country :U.S.A.
(86) International Application No :PCT/US2011/027672
Filing Date :09/03/2011
(87) International Publication No :WO 2011/152909
(61) Patent of Addition to Application Number :NA
Filing Date :NA
(62) Divisional to Application Number :NA
Filing Date :NA

(71)**Name of Applicant :**
1)KURION INC.
Address of Applicant :P.O. Box 5901 Oak Ridge Tennessee 37931 U.S.A.
(72)**Name of Inventor :**
1)DENTON Mark S.

(57) Abstract :
Apparatuses processes and methods for the separation isolation or removal of specific radioactive isotopes from liquid radioactive waste these processes and methods employing isotope specific media (ISM). In some embodiments the processes and methods further include the vitrification of the separated isotopes generally with the ISM; this isotope specific vitrification (ISV) is often a step in a larger scheme of preparing the radioactive isotopes for long term storage or other disposition. A variety of ISM are disclosed.

No. of Pages : 32 No. of Claims : 45

(12) PATENT APPLICATION PUBLICATION
(19) INDIA
(22) Date of filing of Application :24/09/2012
(21) Application No.8316/DELNP/2012 A
(43) Publication Date : 21/03/2014

(54) Title of the invention : IMAGE PROCESSING DEVICE AND METHOD

(51) International classification :H04N7/32
(31) Priority Document No :2010085236
(32) Priority Date :01/04/2010
(33) Name of priority country :Japan
(86) International Application No :PCT/JP2011/055725
Filing Date :11/03/2011
(87) International Publication No :WO 2011/125411
(61) Patent of Addition to Application Number :NA
Filing Date :NA
(62) Divisional to Application Number :NA
Filing Date :NA

(71)**Name of Applicant :**
1)SONY CORPORATION
Address of Applicant :1 7 1 Konan Minato ku Tokyo 1080075 Japan
(72)**Name of Inventor :**
1)SATO Kazushi

(57) Abstract :
Disclosed are an image processing device and method that are able to achieve a higher coding efficiency. An predicted motion vector generating unit (76) generates a plurality of types of predicted motion vector information using supplied motion vector information of the vicinity and supplies to a motion estimation/compensation unit (75) each set of predicted motion vector information and a code number allocated by a code number allocation unit (77) to the predicted motion vector information. The code number allocation unit (77) supplies code number allocation information regarding which code number to allocate to which predicted motion vector information to a predicted motion vector generation unit (76) and a reversible coding unit (66). This technology can for example be applied in an image coding device that codes with an H.264/AVC method as a base.

No. of Pages : 256 No. of Claims : 27

(12) PATENT APPLICATION PUBLICATION
(19) INDIA
(22) Date of filing of Application :24/09/2012
(21) Application No.8317/DELNP/2012 A
(43) Publication Date : 21/03/2014

(54) Title of the invention : ADVANCED MICROWAVE SYSTEM FOR TREATING RADIOACTIVE WASTE

(51) International classification :H05B6/70
(31) Priority Document No :61/312,019
(32) Priority Date :09/03/2010
(33) Name of priority country :U.S.A.
(86) International Application No :PCT/US2011/027640
Filing Date :09/03/2011
(87) International Publication No :WO 2011/152907
(61) Patent of Addition to Application Number :NA
Filing Date :NA
(62) Divisional to Application Number :NA
Filing Date :NA

(71)**Name of Applicant :**
1)KURION INC.
Address of Applicant :P.O. Box 5901 Oak Ridge Tennessee 37831 U.S.A.
(72)**Name of Inventor :**
1)DENTON Mark S.

(57) Abstract :
Systems and methods for reducing the volume of radioactive waste materials through desiccation pyrolysis and vitrification carried out by microwave heating. The final product of the advanced microwave system is a dryer denser compacted waste product. The invention comprises systems in which a layer of waste material is treated by microwaves within a hopper before deposited within the final waste container; systems in which a thin layer of waste material is treated by microwaves after it has been deposited within the final waste container; and systems in which waste material is treated by microwaves within a hopper before being deposited within the final waste container.

No. of Pages : 26 No. of Claims : 18

(12) PATENT APPLICATION PUBLICATION
(19) INDIA
(22) Date of filing of Application :19/09/2012
(21) Application No.8178/DELNP/2012 A
(43) Publication Date : 21/03/2014

(54) Title of the invention : COMBUSTION ENGINE STARTER WITH OUTPUT PINION IN THE STARTER HOUSING

(51) International classification :F02N15/06
(31) Priority Document No :1051975
(32) Priority Date :19/03/2010
(33) Name of priority country :France
(86) International Application No :PCT/FR2011/050513
Filing Date :15/03/2011
(87) International Publication No :WO 2011/114052
(61) Patent of Addition to Application Number :NA
Filing Date :NA
(62) Divisional to Application Number :NA
Filing Date :NA

(71)**Name of Applicant :**
1)VALEO EQUIPEMENTS ELECTRIQUES MOTEUR
Address of Applicant :2 rue Andr Boulle F 94046 Creteil Cedex France
(72)**Name of Inventor :**
1)SEILLIER Guillaume
2)BOISSERENQ Laurent

(57) Abstract :
The combustion engine starter with output pinion (18) comprises a front bearing (12) provided with a front face (120) having an opening (312) a drive assembly equipped with a bush (26) passing through the opening (312) and bearing the output pinion (18) outside the front bearing (12) complementary splines (67 167) which act between the front end of the bush (26) and at the internal periphery of the output pinion (18) a groove (64 164) which interrupts the splines (67) of the bush (26) in order to mount a stop (60 160) for immobilizing the pinion a play compensating spring (61) urging the pinion into contact with the stop (60 160) formed by a spring ring which has a height greater than its thickness and which is housed with radial clearance at least partially in an annular recess (62) made in the front face (183) of the pinion (18); the internal periphery of the spring ring (60 160) being mounted in the groove (64 164) in the bush (26). Application: combustion engine starter of a motor vehicle.

No. of Pages : 20 No. of Claims : 15

(12) PATENT APPLICATION PUBLICATION
(19) INDIA
(22) Date of filing of Application :19/09/2012
(21) Application No.8179/DELNP/2012 A
(43) Publication Date : 21/03/2014

(54) Title of the invention : COBRA ANTENNA

(51) International classification :H01Q9/16
(31) Priority Document No :2010071218
(32) Priority Date :26/03/2010
(33) Name of priority country :Japan
(86) International Application No :PCT/JP2011/055924
Filing Date :14/03/2011
(87) International Publication No :WO 2011/118436
(61) Patent of Addition to Application Number :NA
Filing Date :NA
(62) Divisional to Application Number :NA
Filing Date :NA

(71)**Name of Applicant :**
1)SONY CORPORATION
Address of Applicant :1 7 1 Konan Minato ku Tokyo 1080075 Japan
(72)**Name of Inventor :**
1)YOSHINO Yoshitaka
2)TSUBOI Satoru

(57) Abstract :
Disclosed is a cobra antenna which is small has a superior antenna gain performance and receives minimum influence from the length of a coaxial wire. An antenna element having a length corresponding to a frequency of a broadcast wave to be received and a coaxial wire are connected to a relay unit which functions as a feeding point. A ferrite core around which the axial wire is wound one to three times is arranged at a position in the axial wire which is spaced from the relay unit by the same length as the length from the relay unit to the antenna element and a high frequency blocking unit for blocking a high frequency current from the coaxial wire is provided on the front side of a connector of a receiving device to which the other side of the coaxial wire is connected.

No. of Pages : 24 No. of Claims : 4

(12) PATENT APPLICATION PUBLICATION
(19) INDIA
(22) Date of filing of Application :19/09/2012
(21) Application No.8180/DELNP/2012 A
(43) Publication Date : 21/03/2014

(54) Title of the invention : CYCLIC TETRAPEPTIDES AND THERAPEUTIC APPLICATIONS THEREOF

(51) International classification :C07D487/14,C07D403/12,C07D403/06
(31) Priority Document No :P.390493
(32) Priority Date :19/02/2010
(33) Name of priority country :Poland
(86) International Application No :PCT/US2011/025571
Filing Date :19/02/2011
(87) International Publication No :WO 2011/103524
(61) Patent of Addition to Application Number :NA
Filing Date :NA
(62) Divisional to Application Number :NA
Filing Date :NA

(71)**Name of Applicant :**
1)PEPTADERM SP.Z.O.O.
Address of Applicant :Krakow Suburb 13 Region 141690076 PL 00 071 Warsaw Poland
2)LODZ UNIVERSITY
3)FEIGELSON Daniel
(72)**Name of Inventor :**
1)ZABROCKI Janusz
2)ZIMECKI Michal
3)KASZUBA Andrzej
4)KACZMAREK Krzysztof

(57) Abstract :
There are provided compounds of formula I wherein k m n p R R R R R3 and R4 are as defined in the application. Other embodiments are also disclosed.

No. of Pages : 83 No. of Claims : 243

(12) PATENT APPLICATION PUBLICATION
(19) INDIA
(22) Date of filing of Application :24/09/2012
(21) Application No.8330/DELNP/2012 A
(43) Publication Date : 21/03/2014

(54) Title of the invention : COMPOSITIONS AND METHODS FOR BACTERIAL PRODUCTION OF CHONDROITIN

(51) International classification :C12P19/04
(31) Priority Document No :61/309,407
(32) Priority Date :01/03/2010
(33) Name of priority country :U.S.A.
(86) International Application No :PCT/US2011/026748
Filing Date :01/03/2011
(87) International Publication No :WO 2011/109438
(61) Patent of Addition to Application Number :NA
Filing Date :NA
(62) Divisional to Application Number :NA
Filing Date :NA

(71)**Name of Applicant :**
1)DSM IP Assets B.V.
Address of Applicant :Het Overloon 1 6411 TE Heerlen Netherlands
2)SEIKAGAKU CORPORATION
(72)**Name of Inventor :**
1)DOHERTY Daniel H.
2)WEAVER Craig A.
3)MIYAMOTO Kentaro
4)MINAMISAWA Toshikazu

(57) Abstract :
The invention relates to the field of recombinant DNA technology for the production of chondroitin including the production of chondroitin sulfate via a combination of recombinant bacterial fermentation and post fermentation sulfation.

No. of Pages : 575 No. of Claims : 64

(12) PATENT APPLICATION PUBLICATION
(19) INDIA
(22) Date of filing of Application :24/09/2012
(21) Application No.8331/DELNP/2012 A
(43) Publication Date : 21/03/2014

(54) Title of the invention : LIQUID DISPENSING SYSTEM FOR USE IN THE FORMATION OF A TOBACCO POUCH PRODUCT

(51) International classification :B65B61/00,B65B9/20
(31) Priority Document No :61/318,227
(32) Priority Date :26/03/2010
(33) Name of priority country :U.S.A.
(86) International Application No :PCT/IB2011/000978
Filing Date :28/03/2011
(87) International Publication No :WO 2011/117730
(61) Patent of Addition to Application Number :NA
Filing Date :NA
(62) Divisional to Application Number :NA
Filing Date :NA

(71)**Name of Applicant :**
1)PHILIP MORRIS PRODUCTS S.A.
Address of Applicant :Quai Jeanrenaud 3 CH 2000 Neuchatel Switzerland
(72)**Name of Inventor :**
1)WILLIAMS Dwight D.
2)LONGEST Cary

(57) Abstract :
A liquid dispenser system (200) for use with an apparatus for forming and filling pouched products (1 10) the system comprising a first fluid dispenser shoe (210) the first fluid dispenser (210) comprising an inlet bore (226) for placing in fluid communication with a source of liquid to be dispensed; at least one liquid dispensing manifold (224) in fluid communication with the inlet bore (226); and a plurality of exit orifices (222) positioned along the at least one liquid dispensing manifold (224) for dispensing the liquid on an outer surface of the pouched product (10) wherein the first fluid dispenser shoe (210) is positioned downstream of the apparatus for forming and filling pouched products (1 10) and adjacent a stream of pouched products (10) as they exit the apparatus.

No. of Pages : 26 No. of Claims : 24

(12) PATENT APPLICATION PUBLICATION
(19) INDIA
(22) Date of filing of Application :21/09/2012
(21) Application No.8297/DELNP/2012 A
(43) Publication Date : 21/03/2014

(54) Title of the invention : SOLID ORAL SENSORIAL PRODUCTS INCLUDING STAIN INHIBITOR

(51) International classification :A23F3/30,A23F5/42,A24B13/00
(31) Priority Document No :12/748205
(32) Priority Date :26/03/2010
(33) Name of priority country :U.S.A.
(86) International Application No :PCT/EP2011/001503
Filing Date :25/03/2011
(87) International Publication No :WO 2011/116977
(61) Patent of Addition to Application Number :NA
Filing Date :NA
(62) Divisional to Application Number :NA
Filing Date :NA

(71)**Name of Applicant :**
1)PHILIP MORRIS PRODUCTS S.A.
Address of Applicant :Quai Jeanrenaud 3 CH 2000 Neuchatel Switzerland
(72)**Name of Inventor :**
1)MISER Donald E.
2)SWEENEY William R.
3)LI Qinglin
4)MERSKI Jerome A.

(57) Abstract :
A solid oral sensorial product such as a tobacco pouch product (10) includes at least one botanical material and at least one phosphate containing stain inhibitor. The botanical material is selected from the group consisting of tobacco tea coffee cocoa and combinations thereof.

No. of Pages : 26 No. of Claims : 16

(12) PATENT APPLICATION PUBLICATION
(19) INDIA
(22) Date of filing of Application :21/09/2012
(21) Application No.8298/DELNP/2012 A
(43) Publication Date : 21/03/2014

(54) Title of the invention : FLUOROPOLYMER NON STICK COATINGS WITH IMPROVED SLOUGHING AND BLISTERING RESISTANCE

(51) International classification :C09D127/18,F16L58/10
(31) Priority Document No :61/347833
(32) Priority Date :25/05/2010
(33) Name of priority country :U.S.A.
(86) International Application No :PCT/US2011/037831
Filing Date :25/05/2011
(87) International Publication No :WO 2011/150003
(61) Patent of Addition to Application Number :NA
Filing Date :NA
(62) Divisional to Application Number :NA
Filing Date :NA

(71)**Name of Applicant :**
1)E. I. du Pont de Nemours and Company
Address of Applicant :1007 Market Street Wilmington Delaware 19898 U.S.A.
(72)**Name of Inventor :**
1)MCKEEN Laurence Waino
2)WANG Ying

(57) Abstract :
A coating composition is provided comprising (a) an aqueous medium (b) melt fabricable perfluoropolymer dispersed in said aqueous medium and having a melting temperature of at least 290°C (c) melt fabricable perfluoropolymer dispersed in said aqueous medium and having a melting temperature of no greater than 270 °C and (d) water miscible organic liquid having a boiling temperature of at least 280°C and optionally (e) filler the combination of (c) and (d) providing sloughing resistance to said composition applied to a non horizontal substrate and baked component (d) being unnecessary when component (a) is not present in the coating composition and when filler is present (c) being present in an effective amount to increase the cohesive strength of the baked layer of the coating composition.

No. of Pages : 37 No. of Claims : 15

(12) PATENT APPLICATION PUBLICATION
(19) INDIA
(22) Date of filing of Application :21/09/2012
(21) Application No.8299/DELNP/2012 A
(43) Publication Date : 21/03/2014

(54) Title of the invention : LIPID VESICLE COMPOSITIONS AND METHODS OF USE

(51) International classification :A61K9/127,A61K39/00,A61K47/48
(31) Priority Document No :61/315,485
(32) Priority Date :19/03/2010
(33) Name of priority country :U.S.A.
(86) International Application No :PCT/US2011/000502
Filing Date :19/03/2011
(87) International Publication No :WO 2011/115684
(61) Patent of Addition to Application Number :NA
Filing Date :NA
(62) Divisional to Application Number :NA
Filing Date :NA

(71)**Name of Applicant :**
1)MASSACHUSETTS INSTITUTE OF TECHNOLOGY
Address of Applicant :77 Massachusetts Avenue Cambridge MA 02139 U.S.A.
(72)**Name of Inventor :**
1)IRVINE Darrell J.
2)MOON Jaehyun

(57) Abstract :
The invention provides delivery systems comprised of stabilized multilamellar vesicles as well as compositions methods of synthesis and methods of use thereof. The stabilized multilamellar vesicles may comprise prophylactic therapeutic and/or diagnostic agents.

No. of Pages : 97 No. of Claims : 52

(12) PATENT APPLICATION PUBLICATION
(19) INDIA
(22) Date of filing of Application :24/09/2012
(21) Application No.8338/DELNP/2012 A
(43) Publication Date : 21/03/2014

(54) Title of the invention : ELECTRICAL CONNECTOR

(51) International classification :H01R13/629
(31) Priority Document No :TO2010A000162
(32) Priority Date :04/03/2010
(33) Name of priority country :Italy
(86) International Application No :PCT/EP2011/052884
Filing Date :28/02/2011
(87) International Publication No :WO 2011/107416
(61) Patent of Addition to Application Number :NA
Filing Date :NA
(62) Divisional to Application Number :NA
Filing Date :NA

(71)**Name of Applicant :**
1)TYCO ELECTRONICS AMP ITALIA SRL
Address of Applicant :Corso Frateli Cervi N.15 Collegno I 10093 Torino Italy
(72)**Name of Inventor :**
1)GENTA Alessandro

(57) Abstract :
An electrical connector comprises a first connector element (2) and a second connector element (4) carrying respective contacts and interconnected so as to be movable along a coupling direction between an uncoupled state and a coupled state. A sliding element (5) is mounted in the first connector element (2) so as to be slidable in a direction orthogonal to said direction of coupling between an extended position and a retracted position in the first connector element (2). The sliding element (5) has one or more cam tracks (5T) each engaged by an element (4P) of the second connector element (4) in such a way that a movement of the sliding element (5) from the extended position thereof to the retracted position thereof in said first connector element (2) causes the second connector element (4) to move into the coupled state. Each of said cam follower elements (4P) of the second connector element (4) engages the respective cam track (5T) via a cog (4W) mounted rotatably on said cam follower element (4P).

No. of Pages : 19 No. of Claims : 6

(12) PATENT APPLICATION PUBLICATION
(19) INDIA
(22) Date of filing of Application :24/09/2012
(21) Application No.8340/DELNP/2012 A
(43) Publication Date : 21/03/2014

(54) Title of the invention : CONNECTION DEVICE FOR A SOLAR MODULE

(51) International classification :H01L31/048
(31) Priority Document No :10 2010 002 565.8
(32) Priority Date :04/03/2010
(33) Name of priority country :Germany
(86) International Application No :PCT/EP2011/053069
Filing Date :02/03/2011
(87) International Publication No :WO 2011/107497
(61) Patent of Addition to Application Number :NA
Filing Date :NA
(62) Divisional to Application Number :NA
Filing Date :NA

(71)**Name of Applicant :**
1)TYCO ELECTRONICS AMP GMBH
Address of Applicant :Amperestrasse 12 14 64625 Bensheim Germany
(72)**Name of Inventor :**
1)LEONHARD Andreas
2)KOSCH Bernd
3)SALZMANN Kristopher

(57) Abstract :
The invention relates to a connection device (100 101 102 103) for a solar module (400) the connection device (100 101 102 103) having a housing (110 111 112 113) and a contacting means (180) arranged in the housing (110 111 112 113) for contacting a contact element (430) of the solar module (400). The connection device (100 101 102 103) is distinguished by a blind mating connector (120 150) arranged on the housing (110 111 112 113) without an electrical connection to the contacting means (180) onto which connector a plug and socket connector (220 250) can be plugged. The invention furthermore relates to a solar module with such a connection device (100 101 102 103).

No. of Pages : 33 No. of Claims : 10

(12) PATENT APPLICATION PUBLICATION
(19) INDIA
(22) Date of filing of Application :17/09/2012
(21) Application No.8107/DELNP/2012 A
(43) Publication Date : 21/03/2014

(54) Title of the invention : ALTERNATING CURRENT ELECTRIC VEHICLE

(51) International classification :B60L9/24
(31) Priority Document No :2010-110416
(32) Priority Date :12/05/2010
(33) Name of priority country :Japan
(86) International Application No :PCT/JP2011/002598
Filing Date :10/05/2011
(87) International Publication No :WO 2011/142121
(61) Patent of Addition to Application Number :NA
Filing Date :NA
(62) Divisional to Application Number :NA
Filing Date :NA

(71)**Name of Applicant :**
1)KABUSHIKI KAISHA TOSHIBA
Address of Applicant :1 1 Shibaura 1 chome Minato ku Tokyo 1058001 Japan
(72)**Name of Inventor :**
1)SADAKATA Shungo

(57) Abstract :
Disclosed is an alternating current electric vehicle wherein: alternating current power is supplied from an overhead line (catenary wire) (31); a primary motor (7) is configured in a secondary circuit (C2); an auxiliary device (10) is configured in a tertiary circuit (C3); a battery (8a) is connected to an intermediate direct current link (LN2) of the secondary circuit (C2) via a connector (11a); the battery (8a) is connected to another intermediate direct current link (LN3) with in sequence another connector (11b) and a DC/DC converter (9) therebetween; and the vehicle is provided with a manual switch (12) that operates the first connector (11a).

No. of Pages : 37 No. of Claims : 7

(12) PATENT APPLICATION PUBLICATION
(19) INDIA
(22) Date of filing of Application :17/09/2012
(21) Application No.8109/DELNP/2012 A
(43) Publication Date : 21/03/2014

(54) Title of the invention : METHOD FOR TESTING THE FUNCTIONALITY OF AN EXHAUST GAS RECIRCULATION VALVE OF AN INTERNAL COMBUSTION ENGINE

(51) International classification :F02D41/00,F02M25/07
(31) Priority Document No :10 2010 003 203.4
(32) Priority Date :24/03/2010
(33) Name of priority country :Germany
(86) International Application No :PCT/EP2011/053871
Filing Date :15/03/2011
(87) International Publication No :WO 2011/117108
(61) Patent of Addition to Application Number :NA
Filing Date :NA
(62) Divisional to Application Number :NA
Filing Date :NA

(71)**Name of Applicant :**
1)ROBERT BOSCH GMBH
Address of Applicant :Postfach 30 02 20 70442 Stuttgart Germany
(72)**Name of Inventor :**
1)BREITBACH Thomas
2)PAWLAK Jens

(57) Abstract :
The invention relates to a method for testing the functionality of an exhaust gas recirculation valve (13) of an internal combustion engine (1). The position of an actuator (13a) of the exhaust gas recirculation valve (13) is periodically changed and a system variable (LM LD) that is influenced by the movement of the actuator (13a) is measured. The measured signal is analyzed in order to test the functionality of the exhaust gas recirculation valve (13).

No. of Pages : 10 No. of Claims : 8

(12) PATENT APPLICATION PUBLICATION
(19) INDIA
(22) Date of filing of Application :21/09/2012
(21) Application No.8300/DELNP/2012 A
(43) Publication Date : 21/03/2014

(54) Title of the invention : WATERPROOF BREATHABLE FABRIC AND METHOD OF MAKING THE SAME

(51) International classification :D06M11/74,D06M11/73,D06C7/00
(31) Priority Document No :61/334361
(32) Priority Date :13/05/2010
(33) Name of priority country :U.S.A.
(86) International Application No :PCT/US2011/036153
Filing Date :11/05/2011
(87) International Publication No :WO 2011/143370
(61) Patent of Addition to Application Number :NA
Filing Date :NA
(62) Divisional to Application Number :NA
Filing Date :NA

(71)**Name of Applicant :**
1)COLUMBIA SPORTSWEAR NORTH AMERICA INC.
Address of Applicant :14375 NW Science Park Drive Portland OR 97229 U.S.A.
(72)**Name of Inventor :**
1)SKANKEY Wayne
2)TIN Jen Hsien

(57) Abstract :
In various embodiments a waterproof breathable (WPB) fabric and method of producing the same are provided wherein a WPB membrane is laminated to a first side of a fabric the laminated fabric is then treated with a treatment agent and the treated fabric is cured. The treatment agent may include at least one of an oleophobic (oil repellent) compound and/or a hydrophobic (water repellent) compound. In some embodiments the hydrophobic compound may be a durable water repellent (DWR) treatment. The treatment agent may provide protection for the fabric by repelling oil based and/or water based substances.

No. of Pages : 15 No. of Claims : 24

(12) PATENT APPLICATION PUBLICATION
(19) INDIA
(22) Date of filing of Application :21/09/2012
(21) Application No.8301/DELNP/2012 A
(43) Publication Date : 21/03/2014

(54) Title of the invention : EXPRESSION OF MONOCLONAL ANTIBODIES IN CILIATE HOST CELLS

(51) International classification	:C07K16/00,C07K16/28,A61K39/395
(31) Priority Document No	:1003701.8
(32) Priority Date	:05/03/2010
(33) Name of priority country	:U.K.
(86) International Application No	:PCT/EP2011/053129
Filing Date	:02/03/2011
(87) International Publication No	:WO 2011/107520
(61) Patent of Addition to Application Number	:NA
Filing Date	:NA
(62) Divisional to Application Number	:NA
Filing Date	:NA

(71)**Name of Applicant :**
1)CILIAN AG
Address of Applicant :Johann Krane Weg 42 48149 M¼nster Germany
(72)**Name of Inventor :**
1)HARTMANN Marcus
2)APELT Jenny

(57) Abstract :
The present invention is related to a system for the heterologous expression of a monoclonal Antibody (mAb) or a fragment or derivative thereof said system comprising at least one ciliate host cell and incorporated into said ciliate host cell at least one heterologous nucleic acid molecule encoding for said monoclonal Antibody or a fragment or derivative thereof.

No. of Pages : 53 No. of Claims : 18

(12) PATENT APPLICATION PUBLICATION
(19) INDIA
(22) Date of filing of Application :24/09/2012
(21) Application No.8344/DELNP/2012 A
(43) Publication Date : 21/03/2014

(54) Title of the invention : NOVEL AMIDES AS FUNGICIDES

(51) International classification :C07D213/30,C07D213/32
(31) Priority Document No :10163566.2
(32) Priority Date :21/05/2010
(33) Name of priority country :EPO
(86) International Application No :PCT/EP2011/057104
Filing Date :04/05/2011
(87) International Publication No :WO 2011/144444
(61) Patent of Addition to Application Number :NA
Filing Date :NA
(62) Divisional to Application Number :NA
Filing Date :NA

(71)**Name of Applicant :**
1)SYNGENTA PARTICIPATIONS AG
Address of Applicant :Schwarzwaldallee 215 CH 4058 Basel Switzerland
(72)**Name of Inventor :**
1)TRAH Stephan
2)QUARANTA Laura
3)BEAUDEGNIES Renaud
4)MURPHY KESSABI Fiona
5)BERTHON Guillaume
6)LAMBERTH Clemens

(57) Abstract :
Compounds of the general formula (I) wherein the substituents are as defined in claim 1 are useful as fungicides.

No. of Pages : 46 No. of Claims : 15

(12) PATENT APPLICATION PUBLICATION
(19) INDIA
(22) Date of filing of Application :24/09/2012
(21) Application No.8345/DELNP/2012 A
(43) Publication Date : 21/03/2014

(54) Title of the invention : GRAVITY ASSISTED ROTARY MECHANISM AND MATCHED POWER GENERATION DEVICE THEREOF

(51) International classification :F03G3/00,F03G7/10
(31) Priority Document No :201020144934.X
(32) Priority Date :30/03/2010
(33) Name of priority country :China
(86) International Application No :PCT/CN2011/071061
Filing Date :17/02/2011
(87) International Publication No :WO 2011/120361
(61) Patent of Addition to Application Number :NA
Filing Date :NA
(62) Divisional to Application Number :NA
Filing Date :NA

(71)**Name of Applicant :**
1)HUANG Ting Yen
Address of Applicant :No. 53 2 Tongan St. Zhongzheng Dist. Taipei City Taiwan 100 China
2)HUANG Cheng Chieh
3)HUANG Cheng Hsiang
(72)**Name of Inventor :**
1)HUANG Ting Yen
2)HUANG Cheng Chieh
3)HUANG Cheng Hsiang

(57) Abstract :
A gravity assisted rotary mechanism (1) and a matched power generation device (5) thereof are provided. The gravity assisted rotary mechanism (1) includes a plurality of rotating elements (10 11 12 13) rotating about a same rotation center (2) respectively having different sizes and symmetrically arranged in regard to the rotation center (2). Each of the rotating elements (10 11 12 13) is driven by a plurality of actuating elements (30 31 32 33) with a same balance weight and is pivotally connected by at least one connecting element so as to form a traction structure symmetrical to each other among the rotating elements (10 11 12 13). The actuating elements (30 31 32 33) and the connecting element can be respectively fitted at interference parts (101 112) provided on at least parts of the rotating elements (10 11 12 13) to interfere in and absorb the energy from the gravity therefore the energy of each actuating element (30 31 32 33) is transferred to respective rotating elements (10 11 12 13) and the connecting element via the interference parts (101 112) thus the energy is cumulated and transferred. An autorotation device which can continuously swing and provide a long time view is formed under the condition of low energy loss. The gravity assisted rotary mechanism (1) is linked with the power generation device (5) to transform the cumulated gravity energy into electrical energy for the use.

No. of Pages : 34 No. of Claims : 55

(12) PATENT APPLICATION PUBLICATION
(19) INDIA
(22) Date of filing of Application :21/09/2012
(21) Application No.8292/DELNP/2012 A
(43) Publication Date : 21/03/2014

(54) Title of the invention : 3D CAMERA WITH FOREGROUND OBJECT DISTANCE SENSING

(51) International classification :G03B35/00
(31) Priority Document No :12/752095
(32) Priority Date :31/03/2010
(33) Name of priority country :U.S.A.
(86) International Application No :PCT/US2011/030812
Filing Date :31/03/2011
(87) International Publication No :WO 2011/123700
(61) Patent of Addition to Application Number :NA
Filing Date :NA
(62) Divisional to Application Number :NA
Filing Date :NA

(71)**Name of Applicant :**
1)CAMERON James
Address of Applicant :2020 N. Lincoln St. Burbank CA 91504 U.S.A.
(72)**Name of Inventor :**
1)PACE Vincent

(57) Abstract :
There is disclosed a stereographic camera system and a method of operating a stereographic camera system. The stereoscopic camera system may include a left camera and a right camera having respective left and right lenses and an IOD mechanism to set an interocular distance between the left and right cameras. A foreground distance sensor may provide an output indicative of a distance to a closest foreground object. A controller may causes the IOD mechanism to set the interocular distance based on in part the output of the foreground distance sensor.

No. of Pages : 40 No. of Claims : 15

(12) PATENT APPLICATION PUBLICATION
(19) INDIA
(22) Date of filing of Application :21/09/2012
(21) Application No.8293/DELNP/2012 A
(43) Publication Date : 21/03/2014

(54) Title of the invention : CUTTING MACHINE AND METHOD FOR CARRYING OUT CUTTING WORK ON FLAT FLEXIBLE OR OTHER MATERIALS

(51) International classification :B26D7/06,B26F1/38,B26D11/00
(31) Priority Document No :102010016479.8
(32) Priority Date :16/04/2010
(33) Name of priority country :Germany
(86) International Application No :PCT/EP2011/055619
Filing Date :11/04/2011
(87) International Publication No :WO 2011/128290
(61) Patent of Addition to Application Number :NA
Filing Date :NA
(62) Divisional to Application Number :NA
Filing Date :NA

(71)**Name of Applicant :**
1)FELBER Matthias
Address of Applicant :Friedrichstr. 7 86709 Wolferstadt Germany
(72)**Name of Inventor :**
1)FELBER Matthias

(57) Abstract :
The invention relates to a cutting machine and to a method for carrying out cutting work on flat flexible or other pieces of material using at least two cutting devices which can carry out cutting work simultaneously. The cutting devices are operated such that when the cutting devices are operated simultaneously each cutting device carries out the respective cutting work on a different piece of material and each of the cutting devices only carries out a respective portion of the cutting work to be carried out on a piece of material. In this way the cutting devices or the cutting machine components carrying same can be prevented from colliding. This in turn has the positive effect that higher cutting performance can be achieved.

No. of Pages : 27 No. of Claims : 15

(12) PATENT APPLICATION PUBLICATION
(19) INDIA
(22) Date of filing of Application :21/09/2012
(21) Application No.8294/DELNP/2012 A
(43) Publication Date : 21/03/2014

(54) Title of the invention : ENGINE OIL PASSAGE STRUCTURE

(51) International classification :F01M1/06,F01M9/10,F02F7/00
(31) Priority Document No :2010098678
(32) Priority Date :22/04/2010
(33) Name of priority country :Japan
(86) International Application No :PCT/JP2011/059117
Filing Date :12/04/2011
(87) International Publication No :WO 2011/132574
(61) Patent of Addition to Application Number :NA
Filing Date :NA
(62) Divisional to Application Number :NA
Filing Date :NA

(71)**Name of Applicant :**
1)SUZUKI MOTOR CORPORATION
Address of Applicant :300 Takatsuka cho Minami ku Hamamatsu shi Shizuoka 4328611 Japan
(72)**Name of Inventor :**
1)YODA Kazuaki

(57) Abstract :
In an engine (11) comprising a valve cam driving cam chain (23) in a cam chain chamber (27) formed by passing through a cylinder assembly (12) and casing (20) in the axial direction of the cylinder an oil passage (34) is disposed from the approximately bottommost area of the cam chain chamber (27) to the oil pan (31).

No. of Pages : 32 No. of Claims : 5

(12) PATENT APPLICATION PUBLICATION
(19) INDIA
(22) Date of filing of Application :21/09/2012
(21) Application No.8295/DELNP/2012 A
(43) Publication Date : 21/03/2014

(54) Title of the invention : IMAGE PROCESSING METHOD AND DEVICE AND IMAGE PROCESSING PROGRAM

(51) International classification :G06T5/00,G06T1/00,H04N1/407
(31) Priority Document No :2010066965
(32) Priority Date :23/03/2010
(33) Name of priority country :Japan
(86) International Application No :PCT/JP2011/057049
Filing Date :23/03/2011
(87) International Publication No :WO 2011/118662
(61) Patent of Addition to Application Number :NA
Filing Date :NA
(62) Divisional to Application Number :NA
Filing Date :NA

(71)**Name of Applicant :**
1)FUJIFILM Corporation
Address of Applicant :26 30 Nishiazabu 2 chome Minato ku Tokyo 1060031 Japan
(72)**Name of Inventor :**
1)IWAKI Yasuharu

(57) Abstract :
Disclosed are an image processing method and device and an image processing program that are able to perform gradation conversion that achieves a favorable saturation reproduction when exchanging and reproducing images between devices or between color spaces having different dynamic ranges by means of having: a first gradation conversion that when converting gradation characteristics of image data of an image converts first gradation characteristics using a one dimensional first lookup table corresponding to the RGB pixel data of the image; and a second gradation conversion that converts the RGB pixel data of the image to chroma data and luminescence data or lightness data and that converts second gradation characteristics of the converted luminescence data or lightness data using a one dimensional second lookup table corresponding to the luminescence data or lightness data; and then weighting the first gradation conversion and the second gradation conversion.

No. of Pages : 51 No. of Claims : 14

(12) PATENT APPLICATION PUBLICATION
(19) INDIA
(22) Date of filing of Application :24/09/2012
(21) Application No.8350/DELNP/2012 A
(43) Publication Date : 21/03/2014

(54) Title of the invention : CAN MANUFACTURE

(51) International classification :B21D 22/30
(31) Priority Document No :10159826.6
(32) Priority Date :13/04/2010
(33) Name of priority country :EPO
(86) International Application No :PCT/EP2011/055847
Filing Date :13/04/2011
(87) International Publication No : NA
(61) Patent of Addition to Application Number :NA
Filing Date :NA
(62) Divisional to Application Number :NA
Filing Date :NA

(71)**Name of Applicant :**
1)CROWN PACKAGING TECHNOLOGY INC.
Address of Applicant :11535 S Central Avenue Alsip Illinois 60803-2599 U.S.A.
(72)**Name of Inventor :**
1)MONRO Stuart

(57) Abstract :
A method and apparatus are disclosed which are suitable for use in the manufacture of two-piece metal containers. In particular a press is disclosed which makes cup sections from metal sheet using a combination of drawing and stretching operations. The cups resulting from the press have the advantage of having a base thickness that is thinner relative to the ingoing gauge of the metal sheet.

No. of Pages : 18 No. of Claims : 9

(12) PATENT APPLICATION PUBLICATION
(19) INDIA
(22) Date of filing of Application :17/09/2012
(21) Application No.8087/DELNP/2012 A
(43) Publication Date : 21/03/2014

(54) Title of the invention : NOVEL CTLA4 IG IMMUNOADHESINS

(51) International classification :C07K14/705
(31) Priority Document No :61/306,311
(32) Priority Date :19/02/2010
(33) Name of priority country :U.S.A.
(86) International Application No :PCT/US2011/025747
Filing Date :22/02/2011
(87) International Publication No :WO 2011/103584
(61) Patent of Addition to Application Number :NA
Filing Date :NA
(62) Divisional to Application Number :NA
Filing Date :NA

(71)**Name of Applicant :**
1)XENCOR INC.
Address of Applicant :111 West Lemon Avenue Monrovia CA 91016 U.S.A.
(72)**Name of Inventor :**
1)LAZAR Gregory A.
2)BERNETT Matthew J.

(57) Abstract :
The present application relates to CTLA4-lg immunoadhesins that target CD80 and CD86, and their use particularly for therapeutic purposes.

No. of Pages : 79 No. of Claims : 12

(12) PATENT APPLICATION PUBLICATION
(19) INDIA
(22) Date of filing of Application :17/09/2012
(21) Application No.8088/DELNP/2012 A
(43) Publication Date : 21/03/2014

(54) Title of the invention : PROCESS FOR THE PRODUCTION OF POLYETHER POLYOLS WITH A HIGH ETHYLENE OXIDE CONTENT

(51) International classification :C08G65/00
(31) Priority Document No :12/725,631
(32) Priority Date :17/03/2010
(33) Name of priority country :U.S.A.
(86) International Application No :PCT/EP2011/053796
Filing Date :14/03/2011
(87) International Publication No :WO 2011/113792
(61) Patent of Addition to Application Number :NA
Filing Date :NA
(62) Divisional to Application Number :NA
Filing Date :NA

(71)**Name of Applicant :**
1)BAYER INTELLECTUAL PROPERTY GMBH
Address of Applicant :Alfred Nobel Strasse 10 40789 Monheim Germany
2)BAYER MATERIALSCIENCE LLC
(72)**Name of Inventor :**
1)LORENZ Klaus
2)HOFMANN Jrg
3)KLESCZEWSKI Bert
4)REESE Jack
5)PAZOS Jose

(57) Abstract :
Polyether polyols with an OH number of from 15 to 120 mg of KOH/g are produced by (i) introducing a mixture of DMC catalyst and a poly(oxyalkylene) polyol or a mixture of DMC catalyst and a polyether polyol (heel) obtainable by the process according to the invention is initially into a reactor and (ii) continuously introducing one (or more) low molecular weight starter compound(s) with a (mixed) hydroxyl functionality of from 2.2 to 6.0 and a mixture composed of a) 73 to 80 parts by weight (per 100 parts by weight of a) plus b)) of ethylene oxide and b) 27 to 20 parts by weight (per 100 parts by weight of a) plus b)) of at least one substituted alkylene oxide corresponding to a specified formula into the mixture from step (i). These polyether polyols are particularly useful for the production of flexible polyurethane foams.

No. of Pages : 38 No. of Claims : 14

(12) PATENT APPLICATION PUBLICATION
(19) INDIA
(22) Date of filing of Application :19/09/2012
(21) Application No.8200/DELNP/2012 A
(43) Publication Date : 21/03/2014

(54) Title of the invention : COMBINATION PHARMACEUTICAL AGENTS AS INHIBITORS OF HCV REPLICATION

(51) International classification :A01N43/00
(31) Priority Document No :61/310579
(32) Priority Date :04/03/2010
(33) Name of priority country :U.S.A.
(86) International Application No :PCT/US2010/044591
Filing Date :05/08/2010
(87) International Publication No :WO 2011/109037
(61) Patent of Addition to Application Number :NA
Filing Date :NA
(62) Divisional to Application Number :NA
Filing Date :NA

(71)**Name of Applicant :**
1)ENANTA PHARMACEUTICALS INC.
Address of Applicant :500 Arsenal Street Watertown MA 02472 U.S.A.
(72)**Name of Inventor :**
1)OR Yat Sun
2)OWENS Christopher M.
3)BRASHER Bradley B.
4)QIU Yao Ling
5)JIANG Lijuan

(57) Abstract :
The present invention relates to pharmaceutical agents administered to a subject either in combination or in series for the treatment of a flaviviridae viral infection for example hepatitis C virus (HCV) wherein treatment comprises administering a compound effective to inhibit the function of the HCV NS5A protein and an additional compound or combinations of compounds having anti HCV activity.

No. of Pages : 102 No. of Claims : 75

(12) PATENT APPLICATION PUBLICATION
(19) INDIA
(22) Date of filing of Application :19/09/2012
(21) Application No.8201/DELNP/2012 A
(43) Publication Date : 21/03/2014

(54) Title of the invention : PROCESS FOR PRODUCING KODA USING LEMNA PAUCICOSTATA

(51) International classification :C12P7/40,C07C59/76,A01H5/00
(31) Priority Document No :2010055166
(32) Priority Date :11/03/2010
(33) Name of priority country :Japan
(86) International Application No :PCT/JP2011/055842
Filing Date :11/03/2011
(87) International Publication No :WO 2011/111841
(61) Patent of Addition to Application Number :NA
Filing Date :NA
(62) Divisional to Application Number :NA
Filing Date :NA

(71)**Name of Applicant :**
1)SHISEIDO COMPANY LTD.
Address of Applicant :5 5 Ginza 7 chome Chuo ku Tokyo 1048010 Japan
(72)**Name of Inventor :**
1)YOKOYAMA Mineyuki
2)BEPPU Toshio

(57) Abstract :
The genes of a novel lipoxygenase and a novel allene oxide synthase derived from Lemna paucicostata strain SH are identified, and a plant growth regulator (KODA) is produced with high yield by using a Lemna paucicostata strain that expresses said lipoxygenase and said allene oxide synthase.

No. of Pages : 43 No. of Claims : 7

(12) PATENT APPLICATION PUBLICATION
(19) INDIA
(22) Date of filing of Application :19/09/2012
(21) Application No.8202/DELNP/2012 A
(43) Publication Date : 21/03/2014

(54) Title of the invention : NOVEL LIPOXYGENASES DERIVED FROM LEMNA PAUCICOSTATA

(51) International classification :C12N15/09,C12N1/15,C12N1/19
(31) Priority Document No :2010055099
(32) Priority Date :11/03/2010
(33) Name of priority country :Japan
(86) International Application No :PCT/JP2011/055834
Filing Date :11/03/2011
(87) International Publication No :WO 2011/111838
(61) Patent of Addition to Application Number :NA
Filing Date :NA
(62) Divisional to Application Number :NA
Filing Date :NA

(71)**Name of Applicant :**
1)SHISEIDO COMPANY LTD.
Address of Applicant :5 5 Ginza 7 chome Chuo ku Tokyo 1048010 Japan
(72)**Name of Inventor :**
1)YOKOYAMA Mineyuki
2)TAKAGI Kazuteru
3)KAMICHI Sari

(57) Abstract :
Provided are novel highly active 9 product specific lipoxygenase cDNAs derived from Lemna paucicostata strain SH and Lemna paucicostata strain 441. Also provided are proteins coded by said lipoxygenase cDNAs.

No. of Pages : 62 No. of Claims : 5

(12) PATENT APPLICATION PUBLICATION
(19) INDIA
(22) Date of filing of Application :25/09/2012
(21) Application No.8356/DELNP/2012 A
(43) Publication Date : 21/03/2014

(54) Title of the invention : OPTICAL PICKUP OPTICAL DRIVE DEVICE LIGHT IRRADIATION METHOD

(51) International classification :G11B7/135,G11B7/09,G11B7/125
(31) Priority Document No :2010086177
(32) Priority Date :02/04/2010
(33) Name of priority country :Japan
(86) International Application No :PCT/JP2011/057484
Filing Date :26/03/2011
(87) International Publication No :WO 2011/125565
(61) Patent of Addition to Application Number :NA
Filing Date :NA
(62) Divisional to Application Number :NA
Filing Date :NA

(71)**Name of Applicant :**
1)SONY CORPORATION
Address of Applicant :1 7 1 Konan Minato ku Tokyo 1080075 Japan
(72)**Name of Inventor :**
1)MIYAMOTO Hirotaka
2)SAITO Kimihiro
3)TANABE Norihiro

(57) Abstract :
Disclosed are an optical pickup, an optical drive device, and a light irradiation method capable of suppressing the degree of a spot displacement Îx. The optical pickup irradiates an optical recording medium which includes a reference surface and a recording layer through a common object lens for irradiating a first light used to record or reproduce information in the recording layer and a second light which is different from the first light, and adjusts a focus position of the first light irradiated through the object lens by changing the collimation of the first light to be incident on the object lens so as to suppress the spot displacement Îx between the first light and the second light to be generated in response to an eccentricity of the recording medium, wherein the reference surface has a reflective membrane which has a position guiding portion formed in a spiral shape, and the recording layer is provided in a layer position which is different from that of the reference surface and records information by forming a mark corresponding to irradiated light. The magnification of the second light is within the magnification range of the first light.

No. of Pages : 137 No. of Claims : 8

(12) PATENT APPLICATION PUBLICATION
(19) INDIA
(22) Date of filing of Application :19/09/2012
(21) Application No.8196/DELNP/2012 A
(43) Publication Date : 21/03/2014

(54) Title of the invention : PYRIDINE AND PYRAZINE DERIVATIVE FOR THE TREATMENT OF CF

(51) International classification :C07D213/81,C07D241/28,C07D401/04
(31) Priority Document No :61/315509
(32) Priority Date :19/03/2010
(33) Name of priority country :U.S.A.
(86) International Application No :PCT/EP2011/054038
Filing Date :17/03/2011
(87) International Publication No :WO 2011/113894
(61) Patent of Addition to Application Number :NA
Filing Date :NA
(62) Divisional to Application Number :NA
Filing Date :NA

(71)**Name of Applicant :**
1)NOVARTIS AG
Address of Applicant :Lichtstrasse 35 CH 4056 Basel Switzerland
(72)**Name of Inventor :**
1)BAETTIG Urs
2)BALA Kamlesh Jagdis
3)BUDD Emma
4)EDWARDS Lee
5)HOWSHAM Catherine
6)HUGHES Glyn
7)LEGRAND Darren Mark
8)SPIEGEL Katrin

(57) Abstract :
The present invention provides pyridine and pyrazine derivatives which restore or enhance the function of mutant and/or wild type CFTR to treat cystic fibrosis primary ciliary dyskinesia chronic bronchitis chronic obstructive pulmonary disease asthma respiratory tract infections lung carcinoma xerostomia and keratoconjunctivitis sire or constipation (IBS IBD opioid induced). Pharmaceutical compositions comprising such derivatives are also encompassed.

No. of Pages : 148 No. of Claims : 15

(12) PATENT APPLICATION PUBLICATION
(19) INDIA
(22) Date of filing of Application :19/09/2012
(21) Application No.8197/DELNP/2012 A
(43) Publication Date : 21/03/2014

(54) Title of the invention : FILAMENTOUS FUNGAL HOST STRAINS AND DNA CONSTRUCTS AND METHODS OF USE THEREOF

(51) International classification :C12N15/81,C12N15/00,C12N5/00
(31) Priority Document No :61/351286
(32) Priority Date :03/06/2010
(33) Name of priority country :U.S.A.
(86) International Application No :PCT/US2011/039092
Filing Date :03/06/2011
(87) International Publication No :WO 2011/153449
(61) Patent of Addition to Application Number :NA
Filing Date :NA
(62) Divisional to Application Number :NA
Filing Date :NA

(71)**Name of Applicant :**
1)DANISCO US INC.
Address of Applicant :925 Page Mill Road Palo Alto California 94304 U.S.A.
(72)**Name of Inventor :**
1)BOWER Benjamin S.
2)KAPER Thijs
3)KELEMEN Bradley R.

(57) Abstract :
The present disclosure relates to filamentous fungal host strains and recombinant DNA constructs for creation and use thereof. The filamentous fungal host strains are particularly useful for achieving reliable expression of recombinant enzymes and variants.

No. of Pages : 105 No. of Claims : 12

(12) PATENT APPLICATION PUBLICATION
(19) INDIA
(22) Date of filing of Application :19/09/2012
(21) Application No.8198/DELNP/2012 A
(43) Publication Date : 21/03/2014

(54) Title of the invention : LOW ICE PNEUMATIC MOTOR EXHAUST MUFFLER

(51) International classification :F01N1/10,F01N1/24,F01N13/10
(31) Priority Document No :61/345655
(32) Priority Date :18/05/2010
(33) Name of priority country :U.S.A.
(86) International Application No :PCT/US2011/000881
Filing Date :18/05/2011
(87) International Publication No:WO 2011/146118
(61) Patent of Addition to Application Number :NA
Filing Date :NA
(62) Divisional to Application Number :NA
Filing Date :NA

(71)**Name of Applicant :**
1)GRACO MINNESOTA INC.
Address of Applicant :88 11th Avenue NE Minneapolis MN 55413 1829 U.S.A.
(72)**Name of Inventor :**
1)ROMAN Timothy S.
2)COLLINS Adam K.

(57) Abstract :
A muffler for a positive displacement pneumatic motor includes a case an inlet a diffuser a pathway and sound absorbing material. The inlet and the diffuser are attached to the case. The pathway extends between the inlet and the diffuser and allows ice to travel through the muffler. The sound absorbing material is positioned in the pathway and includes more than one duct through which gas passes.

No. of Pages : 18 No. of Claims : 20

(12) PATENT APPLICATION PUBLICATION
(19) INDIA
(22) Date of filing of Application :19/09/2012
(21) Application No.8199/DELNP/2012 A
(43) Publication Date : 21/03/2014

(54) Title of the invention : SANDALWOOD OIL AND ITS USES

(51) International classification	:A61K36/48,A61K31/185,A61P35/00
(31) Priority Document No	:61/309183
(32) Priority Date	:01/03/2010
(33) Name of priority country	:U.S.A.
(86) International Application No	:PCT/US2011/026706
Filing Date	:01/03/2011
(87) International Publication No	:WO 2011/109411
(61) Patent of Addition to Application Number	:NA
Filing Date	:NA
(62) Divisional to Application Number	:NA
Filing Date	:NA

(71)**Name of Applicant :**
1)SANTALIS PHARMACEUTICALS INC.
Address of Applicant :12621 Silicon Drive Suite 100 San Antonio TX 78249 U.S.A.
(72)**Name of Inventor :**
1)CLEMENTS Ian
2)CASTELLA Paul
3)LEVENSON Corey

(57) Abstract :
Provided herein are compositions of sandalwood oil and methods of making and using such compositions.

No. of Pages : 39 No. of Claims : 14

(12) PATENT APPLICATION PUBLICATION
(19) INDIA
(22) Date of filing of Application :25/09/2012
(21) Application No.8360/DELNP/2012 A
(43) Publication Date : 21/03/2014

(54) Title of the invention : AIR CONDITIONING LOOP INCLUDING A HEAT EXCHANGER POSITIONED DIRECTLY BETWEEN TWO EXPANSION MEMBERS

(51) International classification :F25B5/04,F25B41/04,F25B6/04
(31) Priority Document No :10/01199
(32) Priority Date :25/03/2010
(33) Name of priority country :France
(86) International Application No:PCT/EP2011/001148
Filing Date :09/03/2011
(87) International Publication No :WO 2011/116883
(61) Patent of Addition to Application Number :NA
Filing Date :NA
(62) Divisional to Application Number :NA
Filing Date :NA

(71)**Name of Applicant :**
1)VALEO SYSTEMES THERMIQUES
Address of Applicant :8 rue Louis Lormand La Verri¨re BP 513 F 78321 Le Mesnil St Denis France
(72)**Name of Inventor :**
1)YAHIA Mohamed

(57) Abstract :
The invention relates to an air conditioning loop (14) inside of which a coolant flows. The air conditioning loop (14) includes a main heat exchanger (15) a secondary heat exchanger (16) a first expansion member (26) and a second expansion member (29). The secondary heat exchanger (16) is positioned on the air conditioning loop (14) directly between the two expansion members (26 29).

No. of Pages : 39 No. of Claims : 17

(12) PATENT APPLICATION PUBLICATION
(19) INDIA
(22) Date of filing of Application :25/09/2012
(21) Application No.8361/DELNP/2012 A
(43) Publication Date : 21/03/2014

(54) Title of the invention : STEEL PLATE COOLING SYSTEM AND STEEL PLATE COOLING METHOD

(51) International classification :B21B45/02
(31) Priority Document No :2010-164522
(32) Priority Date :22/07/2010
(33) Name of priority country :Japan
(86) International Application No :PCT/JP2011/066742
Filing Date :22/07/2011
(87) International Publication No :WO 2012/011578
(61) Patent of Addition to Application Number :NA
Filing Date :NA
(62) Divisional to Application Number :NA
Filing Date :NA

(71)**Name of Applicant :**
1)NIPPON STEEL & SUMITOMO METAL CORPORATION,
Address of Applicant :6-1, MARUNOUCHI 2-CHOME, CHIYODA-KU, TOKYO 100-8071, Japan
(72)**Name of Inventor :**
1)YAMAMOTO Ryuji
2)SERIZAWA Yoshihiro
3)ODA Tomoya
4)KAWAMURA Naonori
5)TAWARA Naotaka
6)AGARIO Hidetaka
7)OGAWA Kenichi
8)SHUTOU Kouji

(57) Abstract :
Disclosed is a steel plate cooling system which includes a plurality of pairs of constraining rolls which allow a steel plate to pass restrictively therebetween; and an upper cooling apparatus and a lower cooling apparatus which are disposed between these pairs of constraining rolls so as to be opposed to each other with the steel plate passing through therebetween and have a plurality of spray nozzle arrays. The plurality of spray nozzle arrays are formed in the direction in which the steel plate is fed and each of the spray nozzle arrays has a plurality of the same spray nozzles placed in the direction of width of the steel plate. When viewed in the direction in which the steel plate is fed the spray nozzle arrays are each classified into an upstream spray nozzle array group located relatively upstream and a downstream spray nozzle array group located relatively downstream. The spray nozzles that belong to the upstream spray nozzle array group is less in number than the spray nozzles that belong to the downstream spray nozzle array group.

No. of Pages : 59 No. of Claims : 10

(12) PATENT APPLICATION PUBLICATION
(19) INDIA
(22) Date of filing of Application :21/09/2012
(21) Application No.8267/DELNP/2012 A
(43) Publication Date : 21/03/2014

(54) Title of the invention : BASKET WITH DIVIDING PARTITION AND REFRIGERATION APPLIANCE COMPRISING SUCH A BASKET

(51) International classification :F25D23/06,F25D25/02
(31) Priority Document No :12/714134
(32) Priority Date :26/02/2010
(33) Name of priority country :U.S.A.
(86) International Application No :PCT/US2011/026163
Filing Date :25/02/2011
(87) International Publication No :WO 2011/119285
(61) Patent of Addition to Application Number :NA
Filing Date :NA
(62) Divisional to Application Number :NA
Filing Date :NA

(71)**Name of Applicant :**
1)ELECTROLUX HOME PRODUCTS INC.
Address of Applicant :10200 David Taylor Drive Charlotte NC 28262 U.S.A.
(72)**Name of Inventor :**
1)MOODY William Lee
2)BAYNE Michael
3)STAMEY Jeremiah

(57) Abstract :
Provided is a basket for storing food items in a temperature controlled environment and a refrigeration appliance including such a basket. The basket includes a substantially horizontal platform coupled to two or more upwardly extending walls to form an open container for receiving the food items to be stored in the temperature controlled environment. A partition is provided for dividing the basket into two or more storage regions. A guide is coupled to at least one of the platform and the walls and extends substantially parallel to an upper perimeter of at least one of the walls to define a range of adjustment of the partition. A fastener securely couples the partition to the guide to be adjusted to two or more different locations where the partition is to divide the basket.

No. of Pages : 20 No. of Claims : 14

(12) PATENT APPLICATION PUBLICATION
(19) INDIA
(22) Date of filing of Application :21/09/2012
(21) Application No.8268/DELNP/2012 A
(43) Publication Date : 21/03/2014

(54) Title of the invention : METHOD FOR LOCATING PERSONS AND/OR MOBILE MACHINES IN MINE CAVERNS USING RFID TECHNOLOGY AND LONGWALL FACE EXTRACTION INSTALLATION FOR CARRYING OUT THE METHOD

(51) International classification	:E21F17/18,G01S13/74,E21D23/12
(31) Priority Document No	:102010016317.1
(32) Priority Date	:01/04/2010
(33) Name of priority country	:Germany
(86) International Application No	:PCT/IB2011/051251
Filing Date	:24/03/2011
(87) International Publication No	:WO 2011/121500
(61) Patent of Addition to Application Number	:NA
Filing Date	:NA
(62) Divisional to Application Number	:NA
Filing Date	:NA

(71)**Name of Applicant :**
1)CATERPILLAR GLOBAL MINING EUROPE GMBH
Address of Applicant :Industriestrae 1 44534 L¼nen Germany
(72)**Name of Inventor :**
1)AHLER Marco
2)STELTER Sascha
3)WESTPHALEN Andreas

(57) Abstract :
The invention relates to a method and a longwall face extraction installation having a device for locating persons and/or mobile machines in mine caverns using RFID technology with a plurality of base stations (20) which are arranged in a distributed manner along the mine cavern to be monitored and have a transmitter and preferably a receiver with at least one RFID transponder (12) which is associated with the person or machine to be located has stored identification data can be activated using the base station (20) and can be read in a contactless manner using the base station (20). In order to provide a method for locating persons and a longwall face extraction installation in particular for coal mining which make it possible to effectively use RFID technology the transmitters at least of adjacently positioned base stations (20) along a region of the mine cavern to be monitored successively emit their transmission wave (21) in order to activate an RFID transponder (12).

No. of Pages : 21 No. of Claims : 14

(12) PATENT APPLICATION PUBLICATION
(19) INDIA
(22) Date of filing of Application :21/09/2012
(21) Application No.8269/DELNP/2012 A
(43) Publication Date : 21/03/2014

(54) Title of the invention : OSCILLATING PISTON ENGINE

(51) International classification :F02B53/00,F02B55/02,F02B55/08
(31) Priority Document No :61/282774
(32) Priority Date :30/03/2010
(33) Name of priority country :U.S.A.
(86) International Application No :PCT/US2011/030322
Filing Date :29/03/2011
(87) International Publication No :WO 2011/126835
(61) Patent of Addition to Application Number :NA
Filing Date :NA
(62) Divisional to Application Number :NA
Filing Date :NA

(71)**Name of Applicant :**
1)CUNNINGHAM Stephen Lee
Address of Applicant :2306 Glen Canyon Road Altadena CA 91001 U.S.A.
2)STUART Martin A.
(72)**Name of Inventor :**
1)CUNNINGHAM Stephen Lee
2)STUART Martin A.

(57) Abstract :
An engine configuration that places multiple pistons on one or two oscillating discs. The engine can be configured to operate as an internal combustion engine that uses diesel fuel gasoline or natural gas or it can be configured as an expander to convert high pressure high temperature gas to rotary power. For any given set of choices of numbers of pistons and sizes of pistons disks and gears there are disclosed dimensional constraints useful for more efficient functioning of the engine. This engine is especially suited as a driver for electrical power generation as it delivers high torque at low engine speeds among other uses. Its compact design results in high power to weight ratios.

No. of Pages : 62 No. of Claims : 31

(12) PATENT APPLICATION PUBLICATION
(19) INDIA
(22) Date of filing of Application :25/09/2012
(21) Application No.8367/DELNP/2012 A
(43) Publication Date : 21/03/2014

(54) Title of the invention : PROCESS FOR THE PRODUCTION OF WATER AND SOLVENT FREE HYDROGENATED NITRILE RUBBERS

(51) International classification :C08C1/12,C08C2/00,C08F6/10
(31) Priority Document No :10157846.6
(32) Priority Date :25/03/2010
(33) Name of priority country :ARIPO
(86) International Application No :PCT/EP2011/054285
Filing Date :22/03/2011
(87) International Publication No :WO 2011/117214
(61) Patent of Addition to Application Number :NA
Filing Date :NA
(62) Divisional to Application Number :NA
Filing Date :NA

(71)**Name of Applicant :**
1)LANXESS DEUTSCHLAND GMBH
Address of Applicant :51369 Leverkusen Germany
2)LANXESS INTERNATIONAL SA
(72)**Name of Inventor :**
1)SODDEMANN Matthias
2)OBRECHT Werner
3)MERSMANN Franz Josef
4)PAUL Hanns Ingolf
5)WAGNER Paul
6)FELLER Rolf
7)K–NIG Thomas
8)KIRCHHOFF Jrg
9)B„CKER Werner
10)LOVEGROVE John George Arnold

(57) Abstract :
The present invention relates to a process for the production of water and solvent free hydrogenated nitrile rubber polymers to the hydrogenated nitrile rubbers and the use thereof. The hydrogenated nitrile rubbers comprise repeating units derived from at least one conjugated diene at least one alpha beta unsaturated nitrile and optionally one or more copolymerizable monomers and having a viscosity of at maximum 20000 Pas (measured at 100 degrees Celsius and at a shear rate of 1/s) preferably at maximum 10000 Pas more preferably at maximum 5000 Pas and most preferably at maximum 1000 Pas.

No. of Pages : 43 No. of Claims : 29

(12) PATENT APPLICATION PUBLICATION
(19) INDIA
(22) Date of filing of Application :21/09/2012
(21) Application No.8270/DELNP/2012 A
(43) Publication Date : 21/03/2014

(54) Title of the invention : TRANSDERMAL DELIVERY PATCH

(51) International classification :A61K47/06,A61K9/70,A61K31/00
(31) Priority Document No :61/319007
(32) Priority Date :30/03/2010
(33) Name of priority country :U.S.A.
(86) International Application No :PCT/AU2011/000358
Filing Date :30/03/2011
(87) International Publication No :WO 2011/120084
(61) Patent of Addition to Application Number :NA
Filing Date :NA
(62) Divisional to Application Number :NA
Filing Date :NA

(71)**Name of Applicant :**
1)PHOSPHAGENICS LIMITED
Address of Applicant :11 Duerdin Street Clayton Victoria 3168 Australia
(72)**Name of Inventor :**
1)COTTRELL Jeremy
2)GAETANO Giacinto
3)EL TAMIMY Mahmoud
4)KENNEDY Nicholas
5)GAVIN Paul David

(57) Abstract :
A composition suitable for use in a transdermal delivery patch for administration of a biologically active compound the composition comprising a phosphate compound of tocopherol and a polymer carrier.

No. of Pages : 45 No. of Claims : 43

(12) PATENT APPLICATION PUBLICATION
(19) INDIA
(22) Date of filing of Application :21/09/2012
(21) Application No.8271/DELNP/2012 A
(43) Publication Date : 21/03/2014

(54) Title of the invention : 3 OXO 3 9 DIHYDRO 1H CHROMENO[2 3 C]PYRROLES AS GLUCOKINASE ACTIVATORS

(51) International classification :C07D491/052,A61K31/407,A61P3/10
(31) Priority Document No :61/355619
(32) Priority Date :17/06/2010
(33) Name of priority country :U.S.A.
(86) International Application No :PCT/EP2011/059783
Filing Date :14/06/2011
(87) International Publication No :WO 2011/157682
(61) Patent of Addition to Application Number :NA
Filing Date :NA
(62) Divisional to Application Number :NA
Filing Date :NA

(71)**Name of Applicant :**
1)F. HOFFMANN LA ROCHE AG
Address of Applicant :Grenzacherstrasse 124 CH 4070 Basel Switzerland
(72)**Name of Inventor :**
1)SARABU Ramakanth

(57) Abstract :
The present invention provides novel compounds of formula (I) wherein the substituents are as those disclosed in the specification. These compounds and the pharmaceutical compositions containing them are useful for the treatment of metabolic diseases and disorders such as for example type II diabetes mellitus.

No. of Pages : 92 No. of Claims : 35

(12) PATENT APPLICATION PUBLICATION
(19) INDIA
(22) Date of filing of Application :21/09/2012
(21) Application No.8272/DELNP/2012 A
(43) Publication Date : 21/03/2014

(54) Title of the invention : AZACYCLIC SPIRODERIVATIVES AS HSL INHIBITORS

(51) International classification :C07D471/10,A61K31/438,A61P3/00
(31) Priority Document No :10160030.2
(32) Priority Date :15/04/2010
(33) Name of priority country :EPO
(86) International Application No :PCT/EP2011/055670
Filing Date :12/04/2011
(87) International Publication No :WO 2011/128316
(61) Patent of Addition to Application Number :NA
Filing Date :NA
(62) Divisional to Application Number :NA
Filing Date :NA

(71)**Name of Applicant :**
1)F. HOFFMANN LA ROCHE AG
Address of Applicant :Grenzacherstrasse 124 CH 4070 Basel Switzerland
(72)**Name of Inventor :**
1)ACKERMANN Jean
2)CONTE Aurelia
3)HUNZIKER Daniel
4)NEIDHART Werner
5)NETTEKOVEN Matthias
6)SCHULZ GASCH Tanja
7)WERTHEIMER Stanley

(57) Abstract :
The invention provides novel compounds having the general formula (I) wherein R Rand A are as described herein compositions including the compounds and compounds for the treatment of diabetes metabolic syndrom and obesity (HSL inhibitors).

No. of Pages : 33 No. of Claims : 21

(12) PATENT APPLICATION PUBLICATION
(19) INDIA
(22) Date of filing of Application :21/09/2012
(21) Application No.8273/DELNP/2012 A
(43) Publication Date : 21/03/2014

(54) Title of the invention : MANUFACTURING APPARATUS AND MANUFACTURING METHOD OF HOT-ROLLED STEEL SHEET

(51) International classification :B21B27/10,B21B1/26,B21B28/04
(31) Priority Document No :2010083532
(32) Priority Date :31/03/2010
(33) Name of priority country :Japan
(86) International Application No :PCT/JP2011/057877
Filing Date :29/03/2011
(87) International Publication No :WO 2011/125670
(61) Patent of Addition to Application Number :NA
Filing Date :NA
(62) Divisional to Application Number :NA
Filing Date :NA

(71)**Name of Applicant :**
1)SUMITOMO METAL INDUSTRIES LTD.
Address of Applicant :5 33 Kitahama 4 chome Chuo ku Osaka shi Osaka 5410041 Japan
2)MITSUBISHI HITACHI METALS MACHINERY INC.
(72)**Name of Inventor :**
1)NIKKUNI Daisuke
2)FUKUSHIMA Suguhiro
3)OWADA Takao
4)USUGI Toshihiro

(57) Abstract :
Disclosed are a method for producing and a device for producing a hot rolled steel sheet that are able to evenly cool a rolled member and to increase the surface quality of the rolled member. The device for producing a hot rolled steel sheet is provided with: a rolling stand; a supply means that can supply a lubricant to a work roll and/or a backup roll; an online roll grinding device; and a removal means that can remove at least a portion of the lubricant before grinding the surface of the work roll by means of said grinding device. The method for producing a hot rolled steel sheet has: a step wherein when rolling a plurality of rolled members using said production device at least a portion of the lubricant adhered to the work roll or the work roll and the backup roll is removed using the lubricant removal means after completion of rolling of the leading rolled member; a step wherein after said step the work roll is ground using the online roll grinding device; and a step wherein lubricant is supplied towards the work roll and/or the backup roll from the lubricant supply means.

No. of Pages : 47 No. of Claims : 8

(12) PATENT APPLICATION PUBLICATION
(19) INDIA
(22) Date of filing of Application :25/09/2012
(21) Application No.8371/DELNP/2012 A
(43) Publication Date : 21/03/2014

(54) Title of the invention : TELESCOPING IM NAIL AND ACTUATING MECHANISM

(51) International classification :A61B17/72,A61B17/86
(31) Priority Document No :61/315.520
(32) Priority Date :19/03/2010
(33) Name of priority country :U.S.A.
(86) International Application No :PCT/US2011/028764
Filing Date :17/03/2011
(87) International Publication No :WO 2011/116158
(61) Patent of Addition to Application Number :NA
Filing Date :NA
(62) Divisional to Application Number :NA
Filing Date :NA

(71)**Name of Applicant :**
1)SMITH & NEPHEW INC.
Address of Applicant :1450 Brooks Road Memphis Tennessee 38116 U.S.A.
(72)**Name of Inventor :**
1)ZAHRLY Daniel C.
2)EVANS David L.

(57) Abstract :
A length adjustable IM nail system includes a telescoping IM nail with proximal and distal bodies. An inner magnet within the proximal body is connected to a threaded rod which in turn is connected to the distal body. The threaded rod passes through a threaded block which is connected to the proximal body. The position of the distal end of the threaded rod is fixed with respect to the distal body but may rotate freely within this fixed position. An actuator is also disclosed that includes a pair of rotating magnets disposed in an angular relationship with each other and the axis of the IM nail and the patient s limb. Rotation of these outer magnets in the same direction results in rotation of the inner magnet and threaded rod and a telescoping axial movement of the threaded block and proximal body with respect to the distal body.

No. of Pages : 37 No. of Claims : 17

(12) PATENT APPLICATION PUBLICATION
(19) INDIA
(22) Date of filing of Application :25/09/2012
(21) Application No.8372/DELNP/2012 A
(43) Publication Date : 21/03/2014

(54) Title of the invention : IN WHEEL MOTOR DRIVEN DEVICE

(51) International classification :B60K7/00,F16H1/32,H02K5/22
(31) Priority Document No :2010-069244
(32) Priority Date :25/03/2010
(33) Name of priority country :Japan
(86) International Application No :PCT/JP2011/057148
Filing Date :24/03/2011
(87) International Publication No :WO 2011/118696
(61) Patent of Addition to Application Number :NA
Filing Date :NA
(62) Divisional to Application Number :NA
Filing Date :NA

(71)**Name of Applicant :**
1)NTN CORPORATION
Address of Applicant :3 17 Kyomachibori 1 chome Nishi ku Osaka shi Osaka 5500003 Japan
(72)**Name of Inventor :**
1)SUZUKI Minoru
2)YAMAMOTO Ken
3)YUKISHIMA Ryou

(57) Abstract :
Disclosed is an in wheel motor driven device (21) wherein a motor section (A) and a wheel hub bearing section (C) are connected in series on the same shaft with a speed reduction section (B) therebetween. The axial dimension of the in wheel motor driven device (21) is made small with the result that a large interior space is secured and that the degree of wiring freedom for power supply wires (61) is improved. A terminal box (62) for the power supply wires (61) which supply power to the motor section (A) is disposed on the outer peripheral side surface of a housing (22a) which holds the motor section (A). The portions of the power supply wires (61) that are pulled out inboard from the terminal box (62) are anchored by a power supply wire anchoring holder (63) which extends in a direction perpendicular to the axis line of the housing (22a).

No. of Pages : 53 No. of Claims : 17

(12) PATENT APPLICATION PUBLICATION
(19) INDIA
(22) Date of filing of Application :19/09/2012
(21) Application No.8184/DELNP/2012 A
(43) Publication Date : 21/03/2014

(54) Title of the invention : STABILISATION OF OBJECTS

(51) International classification :A47B91/16,A47B13/02
(31) Priority Document No :2010900830
(32) Priority Date :26/02/2010
(33) Name of priority country :Australia
(86) International Application No :PCT/AU2011/000198
Filing Date :25/02/2011
(87) International Publication No :WO 2011/103628
(61) Patent of Addition to Application Number :NA
Filing Date :NA
(62) Divisional to Application Number :NA
Filing Date :NA

(71)**Name of Applicant :**
1)TIPSTOP TABLES PTY LTD
Address of Applicant :5 Picquet Close Eagle Bay Western Australia 6281 Australia
(72)**Name of Inventor :**
1)CATONI John Gerard
2)HEYRING Christopher Brian
3)HEYRING Toby William
4)MONK Richard

(57) Abstract :
A support mechanism (7) for an object such as a table has at least two fixed legs (3 and 5) at least two moveable legs (4 and 6) and an interconnection means (8). The interconnection means is intermediate and rigidly connected to the at least two fixed legs. Each moveable leg includes a beam portion (4a 6a) with one end of the beam portion connected to the interconnection means by a pivot having a pivot axis (provided by the bolt 12 for example). Each moveable leg also includes at least one support member (19 22) connected to and extending from the beam portion. At least one object support portion (19b 22b) is provided on each support member the object support portion in contact with the object (such as the underside of a table top) in use and providing a substantially vertical support force to the object. Locating means (14) attached to the object and located relative to the interconnection means permit upward relative displacement between the locating means and the interconnection means and prevent substantially horizontal relative displacement between the locating means (14) and the interconnection means (8). Substantially vertical displacement of the ground engaging end or foot (4c or 6c) of one of the moveable legs relative to the fixed legs causes substantially vertical displacement of the support member of the associated moveable leg and therefore substantially vertical displacement of the object and the locating means relative the interconnection means and the fixed legs causing another of the at least two moveable legs to rotate the support mechanism thereby conforming to an uneven surface. Relative horizontal motion between the support members and the object can be accommodated by adding a degree of freedom such as using sliding joints or flexible support members.

No. of Pages : 22 No. of Claims : 17

(12) PATENT APPLICATION PUBLICATION
(19) INDIA
(22) Date of filing of Application :19/09/2012
(21) Application No.8185/DELNP/2012 A
(43) Publication Date : 21/03/2014

(54) Title of the invention : A SPRAY DRYING APPARATUS

(51) International classification :F26B3/12,F26B21/08
(31) Priority Document No :PA201000173
(32) Priority Date :05/03/2010
(33) Name of priority country :Denmark
(86) International Application No :PCT/EP2011/001072
Filing Date :04/03/2011
(87) International Publication No :WO 2011/107284
(61) Patent of Addition to Application Number :NA
Filing Date :NA
(62) Divisional to Application Number :NA
Filing Date :NA

(71)**Name of Applicant :**
1)COTES A/S
Address of Applicant :Industrivej 31A DK 4230 Skaelsk¸r Denmark
(72)**Name of Inventor :**
1)VALENTIN Lars
2)CLAUSEN Jannik Reiner
3)OLESEN S¸ren R¸nnow

(57) Abstract :
The present invention relates to a spray drying apparatus (1) comprising; a spray dryer chamber (10) with a feed inlet device (11) a process air inlet (12) and a process air discharge (13) a process air temperature measuring means (16) and a process air heater (17) for heating a process air volume an adsorption dehumidification device for dehumidification of the process air comprising an adsorption source (41) a process air section (43) and a regeneration air section (44) and having means (22 23) for heating a regeneration air volume to a regeneration air temperature and means (25) for measuring the regeneration air temperature and a regeneration air fan (30) configured for transporting the regeneration air volume and moisture content measuring means (18 19) for determining a moisture content in the process air.

No. of Pages : 26 No. of Claims : 9

(12) PATENT APPLICATION PUBLICATION
(19) INDIA
(22) Date of filing of Application :19/09/2012
(21) Application No.8186/DELNP/2012 A
(43) Publication Date : 21/03/2014

(54) Title of the invention : DOUBLE PATH MOUNT FOR CAB SUSPENSION WITH TILTING FUNCTION

(51) International classification :B60G13/10,B62D33/06,B62D24/04
(31) Priority Document No :12/772446
(32) Priority Date :03/05/2010
(33) Name of priority country:U.S.A.
(86) International Application No :PCT/US2011/032830
Filing Date :18/04/2011
(87) International Publication No :WO 2011/139532
(61) Patent of Addition to Application Number :NA
Filing Date :NA
(62) Divisional to Application Number :NA
Filing Date :NA

(71)**Name of Applicant :**
1)TENNECO AUTOMOTIVE OPERATING COMPANY INC.
Address of Applicant :500 North Field Drive Lake Forest Illinois 60045 U.S.A.
(72)**Name of Inventor :**
1)KNEVELS Luc

(57) Abstract :
A cab mounting assembly attaches a cab to a chassis of a vehicle at the point of rotation of the cab when the cab is tilted. The cab mounting assembly provides two paths for the forces acting between the cab and the chassis. The static forces are supported by a bearing assembly which includes a relatively hard elastomeric member. The dynamic forces are supported by an elastomeric mount which includes a relatively soft elastomeric member. The elastomeric mount is attached to the bearing assembly and to a shock absorber. The bearing assembly is attached to the elastomeric mount and to an air spring assembly.

No. of Pages : 14 No. of Claims : 17

(12) PATENT APPLICATION PUBLICATION
(19) INDIA
(22) Date of filing of Application :19/09/2012
(21) Application No.8187/DELNP/2012 A
(43) Publication Date : 21/03/2014

(54) Title of the invention : FLAVIVIRUS HOST RANGE MUTATIONS AND USES THEREOF

(51) International classification :C07K14/18,C12N15/40,C12N7/01
(31) Priority Document No :61/317103
(32) Priority Date :24/03/2010
(33) Name of priority country :U.S.A.
(86) International Application No :PCT/US2011/029598
Filing Date :23/03/2011
(87) International Publication No :WO 2011/119716
(61) Patent of Addition to Application Number :NA
Filing Date :NA
(62) Divisional to Application Number :NA
Filing Date :NA

(71)**Name of Applicant :**
1)RESEARCH DEVELOPMENT FOUNDATION
Address of Applicant :402 North Division Street Carson City NV 89703 U.S.A.
2)ARBOVAX INC.
(72)**Name of Inventor :**
1)BROWN Dennis T.
2)HERNANDEZ Raquel
3)THOMAS Malcolm E.
4)SMITH Katherine M.
5)NANDA Kavita

(57) Abstract :
Methods and compositions concerning mutant flaviviruses with host range mutations. In some embodiments the invention concerns nucleotide sequences that encode mutant flavivirus proteins. Viruses comprising these sequences that display reduced replication in mammalian cells are provided. In further aspects of the invention flavivirus vaccine compositions are provided. In another embodiment the invention provides methods for vaccination against flavivirus infection.

No. of Pages : 75 No. of Claims : 23

(12) PATENT APPLICATION PUBLICATION
(19) INDIA
(22) Date of filing of Application :19/09/2012
(21) Application No.8188/DELNP/2012 A
(43) Publication Date : 21/03/2014

(54) Title of the invention : DISCRETE DYNODE DETECTOR WITH DYNAMIC GAIN CONTROL

(51) International classification :H01J43/30
(31) Priority Document No :12/751084
(32) Priority Date :31/03/2010
(33) Name of priority country :U.S.A.
(86) International Application No :PCT/US2011/030669
Filing Date :31/03/2011
(87) International Publication No :WO 2011/123603
(61) Patent of Addition to Application Number :NA
Filing Date :NA
(62) Divisional to Application Number :NA
Filing Date :NA

(71)**Name of Applicant :**
1)THERMO FINNIGAN LLC
Address of Applicant :355 River Oaks Parkway San Jose CA 95035 U.S.A.
(72)**Name of Inventor :**
1)KOVTOUN Viatcheslav V.
2)MATHUR Raman

(57) Abstract :
A novel electron multiplier that regulates in real time the gain of downstream dynodes as the instrument receives input signals is introduced. In particular the methods electron multiplier structures and coupled control circuits of the present invention enable a resultant on the fly control signal to be generated upon receiving a predetermined threshold detection signal so as to enable the voltage regulation of one or more downstream dynodes near the output of the device. Accordingly such a novel design as presented herein prevents the dynodes near the output of the instrument from being exposed to deleterious current pulses that can accelerate the aging process of the dynode structures that are essential to the device.

No. of Pages : 23 No. of Claims : 16

(12) PATENT APPLICATION PUBLICATION
(19) INDIA
(22) Date of filing of Application :25/09/2012
(21) Application No.8385/DELNP/2012 A
(43) Publication Date : 21/03/2014

(54) Title of the invention : SAFETY CIRCUIT

(51) International classification :B66B1/00,B66B5/00,G05B9/00
(31) Priority Document No :NA
(32) Priority Date :NA
(33) Name of priority country :NA
(86) International Application No :PCT/US2010/032165
Filing Date :23/04/2010
(87) International Publication No :WO 2011/133163
(61) Patent of Addition to Application Number :NA
Filing Date :NA
(62) Divisional to Application Number :NA
Filing Date :NA

(71)**Name of Applicant :**
1)OTIS ELEVATOR COMPANY
Address of Applicant :Ten Farm Springs Farmington Connecticut 06032 U.S.A.
(72)**Name of Inventor :**
1)HERKEL Peter
2)GEWINNER Juergen
3)TEGTMEIER Dirk H.

(57) Abstract :
An exemplary safety circuit includes a plurality of contacts that are configured to establish a conductive path across the contacts when the contacts are in electrically conductive contact with each other. The contacts selectively interrupt the conductive path across them when the contacts are separated. A controller selectively introduces a voltage pulse across the contacts at a voltage level that is effective to overcome an electrical resistance of any contamination on at least one of the contacts. The controller introduces the voltage pulse at least when the contacts are expected to be in contact to establish the conductive path.

No. of Pages : 14 No. of Claims : 21

(12) PATENT APPLICATION PUBLICATION
(19) INDIA
(22) Date of filing of Application :19/09/2012
(21) Application No.8173/DELNP/2012 A
(43) Publication Date : 21/03/2014

(54) Title of the invention : TELECOMMUNICATION CHIP CARD MOBILE TELEPHONE DEVICE AND COMPUTER READABLE STORAGE MEDIUM

(51) International classification :G06F17/30
(31) Priority Document No :10162390.8
(32) Priority Date :10/05/2010
(33) Name of priority country :EPO
(86) International Application No :PCT/EP2011/057537
Filing Date :10/05/2011
(87) International Publication No :WO 2011/141469
(61) Patent of Addition to Application Number :NA
Filing Date :NA
(62) Divisional to Application Number :NA
Filing Date :NA

(71)**Name of Applicant :**
1)MORPHO CARDS GMBH
Address of Applicant :Konrad Zuse Ring 1 24220 Flintbek Germany
(72)**Name of Inventor :**
1)WINTER Christian

(57) Abstract :
A telecommunications chip card (100) for enabling the login of a mobile telephone device (202 202) into a digital cellular mobile telecommunications network (200) comprising: a chip card reader interface (102) adapted for allowing communications between the telecommunications chip card and the mobile telephone device; a processor means (104); a memory means (106) for storing programs for execution by the processor means; and a program (108) stored in the memory means comprising machine readable instructions executable by the processor means; wherein execution of the program causes the processor means to perform the steps of: receiving (300 402) usage messages (110 228) via the chip card reader interface the usage messages being descriptive of the use of the mobile telephone device analyzing (302 404) the usage messages to create a summary message (112 236) sending (303 406) the summary message via the chip card reader interface to a remote computer system. This allows the remote computer system to identify mobile telephone usage patterns which may be used to select tariff plans beneficial to the user or to send targeted sales or business offers to the user.

No. of Pages : 36 No. of Claims : 18

(12) PATENT APPLICATION PUBLICATION
(19) INDIA
(22) Date of filing of Application :19/09/2012
(21) Application No.8174/DELNP/2012 A
(43) Publication Date : 21/03/2014

(54) Title of the invention : PROCESS AND INTERMEDIATES FOR PREPARING LAPATINIB

(51) International classification :C07D405/04,C07D239/94
(31) Priority Document No :61/316425
(32) Priority Date :23/03/2010
(33) Name of priority country :U.S.A.
(86) International Application No :PCT/CN2011/000493
Filing Date :23/03/2011
(87) International Publication No :WO 2011/116634
(61) Patent of Addition to Application Number :NA
Filing Date :NA
(62) Divisional to Application Number :NA
Filing Date :NA

(71)**Name of Applicant :**
1)SCINOPHARM TAIWAN LTD.
Address of Applicant :No. 1 Nan ke 8th Road Tainan Southern Taiwan Science Park Shan hua Tainan Taiwan 74144 China
(72)**Name of Inventor :**
1)CHEN Yung Fa
2)HENSCHKE Julian Paul
3)LIU Yuanlian
4)CHU Guodong
5)ZHANG Xiaoheng

(57) Abstract :
Provided are a process for preparing lapatinib and its pharmaceutically acceptable salt by use of new intermediates and a process for obtaining a pharmaceutical form of lapatinib ditosylate monohydrate.

No. of Pages : 40 No. of Claims : 29

(12) PATENT APPLICATION PUBLICATION
(19) INDIA
(22) Date of filing of Application :19/09/2012
(21) Application No.8175/DELNP/2012 A
(43) Publication Date : 21/03/2014

(54) Title of the invention : METHOD FOR OBTAINING DNS AND TUNNEL GATEWAY DEVICE

(51) International classification :H04L12/24,H04L29/06
(31) Priority Document No :201010288987.3
(32) Priority Date :16/09/2010
(33) Name of priority country :China
(86) International Application No :PCT/CN2011/077751
Filing Date :28/07/2011
(87) International Publication No :WO 2012/034456
(61) Patent of Addition to Application Number :NA
Filing Date :NA
(62) Divisional to Application Number :NA
Filing Date :NA

(71)**Name of Applicant :**
1)ZTE CORPORATION
Address of Applicant :ZTE Plaza Keji Road South Hi Tech Industrial Park Nanshan Shenzhen Guangdong 518057 China
(72)**Name of Inventor :**
1)YUAN Liquan
2)QIN Chao
3)SUN Peng

(57) Abstract :
The present invention provides a tunnel gateway device used for: receiving the domain name system (DNS) server address of the inner layer or outer layer network of a tunnel assigned by an automatic control server through a management protocol; using its own address as the DNS server address and sending the address to a client or sending the DNS server address to the client. Also provided is a method of obtaining the DNS that enables DNS server distribution and DNS acquisition without relying on address protocols.

No. of Pages : 20 No. of Claims : 14

(12) PATENT APPLICATION PUBLICATION
(19) INDIA
(22) Date of filing of Application :25/09/2012
(21) Application No.8380/DELNP/2012 A
(43) Publication Date : 21/03/2014

(54) Title of the invention : DELIVERY UNIT

(51) International classification :F04C3/08
(31) Priority Document No :10 2010 003 319.7
(32) Priority Date :26/03/2010
(33) Name of priority country :Germany
(86) International Application No :PCT/EP2011/053693
Filing Date :11/03/2011
(87) International Publication No :WO 2011/117087
(61) Patent of Addition to Application Number :NA
Filing Date :NA
(62) Divisional to Application Number :NA
Filing Date :NA

(71)**Name of Applicant :**
1)ROBERT BOSCH GMBH
Address of Applicant :Postfach 30 02 20 70442 Stuttgart Germany
(72)**Name of Inventor :**
1)LAFORSCH Oliver
2)AMESOEDER Dieter
3)KACMAR Marian

(57) Abstract :
Delivery units are already known having a drive rotor and an output rotor driven by the drive rotor which are rotatably mounted in a rotor housing and interact in a meshing manner via spur toothing in each case at least one of the two rotors being axially adjustable and on the rear side thereof facing away from the other rotor having a compensating pressure applied via a compensation channel. The compensating pressure acts firstly counter to the axial compressive forces which arise in the working chambers formed between the rotors and secondly compensates for the forces which would force the two rotors apart. This ensures that the distance between the rotors does not change. The compensating pressure frequently corresponds to the pressure on the pressure side of the delivery unit which means that the forces on the rotors are considerably higher than necessary. This leads to increased friction in the bearings and between the rotors. The rear side of the rotors can also be supplied via slot flows. This has the disadvantage that an undefined compensating pressure is established which depends on the leakage flows which flow into the space or out of the space behind the rotor. In addition in this embodiment the compensating pressure does not have the ideal value for low friction operation. In the delivery unit according to the invention a defined compensating pressure is established on the rear side of the axially adjustable rotors. The invention provides for a control valve (14) to be provided which sets the compensating pressure to a predetermined value between a pressure on the pressure side and a pressure on the suction side.

No. of Pages : 9 No. of Claims : 10

(12) PATENT APPLICATION PUBLICATION
(19) INDIA
(22) Date of filing of Application :24/09/2012
(21) Application No.8318/DELNP/2012 A
(43) Publication Date : 21/03/2014

(54) Title of the invention : MICROWAVE ENHANCED SYSTEM FOR PYROLYSIS AND VITRIFICATION OF RADIOACTIVE WASTE

(51) International classification :G21F9/08,G21F9/14
(31) Priority Document No :61/312019
(32) Priority Date :09/03/2010
(33) Name of priority country :U.S.A.
(86) International Application No :PCT/US2011/027643
Filing Date :09/03/2011
(87) International Publication No :WO 2011/112650
(61) Patent of Addition to Application Number :NA
Filing Date :NA
(62) Divisional to Application Number :NA
Filing Date :NA

(71)**Name of Applicant :**
1)KURION INC.
Address of Applicant :P.O. Box 5901 Oak Ridge Tennessee 37831 U.S.A.
(72)**Name of Inventor :**
1)DENTON Mark S.

(57) Abstract :
Systems and processes for reducing the volume of radioactive waste materials through pyrolysis and vitrification carried out by microwave heating and in some instances a combination of microwave heating and inductive heating. In some embodiments the microwave enhanced vitrification system comprises a microwave system for treating waste material combined with a modular vitrification system that uses inductive heating to vitrify waste material. The final product of the microwave enhanced vitrification system is a denser compacted radioactive waste product.

No. of Pages : 35 No. of Claims : 16

(12) PATENT APPLICATION PUBLICATION
(19) INDIA
(22) Date of filing of Application :24/09/2012
(21) Application No.8319/DELNP/2012 A
(43) Publication Date : 21/03/2014

(54) Title of the invention : ROLLING OF METAL STRIP

(51) International classification :B21B37/38,B21B13/14,B21B29/00
(31) Priority Document No :2010-084054
(32) Priority Date :31/03/2010
(33) Name of priority country :Japan
(86) International Application No :PCT/JP2011/050785
Filing Date :12/01/2011
(87) International Publication No :WO 2011/122070
(61) Patent of Addition to Application Number :NA
Filing Date :NA
(62) Divisional to Application Number :NA
Filing Date :NA

(71)**Name of Applicant :**
1)NIPPON STEEL & SUMITOMO MATAL CORPORATION
Address of Applicant :6-1 MARUNOUCHI 2 CHOME CHIYODA KU TOKYO 1008071, JAPAN
(72)**Name of Inventor :**
1)OGAWA Shigeru
2)HIGO Tsuyoshi
3)WAKATSUKI Kunihiko

(57) Abstract :
Disclosed is a method for rolling in a rolling mill which has a bending decreasing device with a responsivity lower than that of a bending increasing device the method intended for realizing a quick response strip crown and shape control function even under a setting condition in which roll bending decreasing force is applied. To solve the aforementioned challenge the method is executed as follows. Before starting rolling both bending increasing force and bending decreasing force are applied to allow the resultant force or roll bending force equivalent to roll balance force to act upon a work roll chock. At the start of rolling the bending increasing force is varied with the bending decreasing force kept at a constant value allowing the resultant force or predetermined roll bending force (bending decreasing force) to act on the work roll chock for rolling. At the end of the rolling the bending increasing force is reset to the pre rolling value and as the resultant force with the bending decreasing force the roll bending force equivalent to the roll balance force is exerted on the work roll chock allowing the rolling to end under this condition.

No. of Pages : 32 No. of Claims : 3

(12) PATENT APPLICATION PUBLICATION
(19) INDIA
(22) Date of filing of Application :25/09/2012
(21) Application No.8390/DELNP/2012 A
(43) Publication Date : 21/03/2014

(54) Title of the invention : METHOD AND APPARATUS FOR PROVIDING A PORTABLE NEONATAL TRANSPORT INCUBATOR

(51) International classification :A61G11/00,A61G1/044,A61G1/00
(31) Priority Document No :61/310,439
(32) Priority Date :04/03/2010
(33) Name of priority country :U.S.A.
(86) International Application No :PCT/US2011/027275
Filing Date :04/03/2011
(87) International Publication No :WO 2011/109761
(61) Patent of Addition to Application Number :NA
Filing Date :NA
(62) Divisional to Application Number :NA
Filing Date :NA

(71)**Name of Applicant :**
1)BIOSTEK ENGINEERING LLC
Address of Applicant :1655 Emerald Street Broomfield CO 80020 U.S.A.
(72)**Name of Inventor :**
1)BELVAL Jeffrey C.
2)BROX Phillip T.
3)DEAN Harold
4)RAVER Brett P.

(57) Abstract :
Disclosed is a transport incubator capable of housing and maintaining a neonate in a controlled environment while being transported for medical care. The incubator comprises straps to secure the neonate a battery operated heater a fan to circulate the warmed air a source of humidity and at least one portable oxygen bottle. Capable of being worn by a user like a backpack the incubator is portable and is useful for transport through difficult terrain. After making contact with a designated transport vehicle the incubator can be disengaged from the backpack and mounted to a housing platform in the transport vehicle the platform comprising a suspension system to minimize vibrations on the neonate. It is contemplated that the incubator system can accommodate an AC powered battery during vehicular transport of the neonate to a medical care facility. A control unit displays data relevant to the controlled environment of the incubator and the neonate.

No. of Pages : 22 No. of Claims : 20

(12) PATENT APPLICATION PUBLICATION
(19) INDIA
(22) Date of filing of Application :25/09/2012
(21) Application No.8391/DELNP/2012 A
(43) Publication Date : 21/03/2014

(54) Title of the invention : FUNCTIONAL ENHANCEMENT OF MICROORGANISMS TO MINIMIZE PRODUCTION OF ACRYLAMIDE

(51) International classification :C12N1/21,A23L1/00,A23L1/30
(31) Priority Document No :61/309,623
(32) Priority Date :02/03/2010
(33) Name of priority country :U.S.A.
(86) International Application No :PCT/CA2011/000222
Filing Date :01/03/2011
(87) International Publication No :WO 2011/106874
(61) Patent of Addition to Application Number :NA
Filing Date :NA
(62) Divisional to Application Number :NA
Filing Date :NA

(71)**Name of Applicant :**
1)FUNCTIONAL TECHNOLOGIES CORP.
Address of Applicant :218 5511 West Boulevard Vancouver British Columbia V6M 4H3 Canada
(72)**Name of Inventor :**
1)CHHUN Aline
2)HUSNIK John Ivan

(57) Abstract :
The present disclosure provides yeast transformed with a nucleic acid molecule (GAT1) to reduce nitrogen catabolite repression of asparagine transport/degradation and/or overexpress genes (ASP1 or ASP3) encoding cell wall or extracellular proteins involved in asparagine degradation and/or genes (AGP1 or GNP1 or GAP1) encoding proteins involved in asparagine transport under food preparation/processing conditions. The genetically modified yeast has enhanced ability to reduce acnlamide concentration in foods prepared by heating. Also provided are methods and uses of the transgenic yeast for reducing acnlamide in a food product and food products having reduced acrylamide content prepared using the transgenic yeast.

No. of Pages : 156 No. of Claims : 45

(12) PATENT APPLICATION PUBLICATION
(19) INDIA
(22) Date of filing of Application :20/09/2012
(21) Application No.8219/DELNP/2012 A
(43) Publication Date : 21/03/2014

(54) Title of the invention : SEMICONDUCTOR LIGHT EMITTING ELEMENT AND METHOD FOR PRODUCING SAME

(51) International classification :H01L33/00,H01L33/32
(31) Priority Document No :2010050070
(32) Priority Date :08/03/2010
(33) Name of priority country :Japan
(86) International Application No :PCT/JP2011/055149
Filing Date :05/03/2011
(87) International Publication No :WO 2011/111642
(61) Patent of Addition to Application Number :NA
Filing Date :NA
(62) Divisional to Application Number :NA
Filing Date :NA

(71)**Name of Applicant :**
1)NICHIA CORPORATION
Address of Applicant :491 100 Oka Kaminaka cho Anan shi Tokushima 7748601 Japan
(72)**Name of Inventor :**
1)HAMAGUCHI Yasutaka
2)INOUE Yoshiki
3)SAKAMOTO Takahiko

(57) Abstract :
The appearance and production yield of a semiconductor light emitting element are ameliorated. A semiconductor light emitting element is provided with a pad electrode on the semiconductor layer and at least the semiconductor layer is covered with a protective film. At least one stopper member which is separated from the protective film is disposed on the upper surface periphery of the pad electrode. The stopper member is in the shape of a semi circle and is disposed in a manner such that the straight portion faces the center of the pad electrode. As a consequence when measuring the electric and optical properties of the semiconductor light emitting element even if a probe needle were to slide on the pad electrode the probe needle can be securely stopped by guiding the probe needle with the semi circular concave surface of the stopper member thereby preventing the probe needle from reaching the protective film. Moreover the pad electrode is disposed on both the negative and positive electrodes and preferably the stopper member on each electrode is positioned so as to be close to each other.

No. of Pages : 31 No. of Claims : 11

(12) PATENT APPLICATION PUBLICATION
(19) INDIA
(22) Date of filing of Application :20/09/2012
(21) Application No.8221/DELNP/2012 A
(43) Publication Date : 21/03/2014

(54) Title of the invention : TRAY AND DEVICE FOR STABILISING A TRAY

(51) International classification :A47G23/06
(31) Priority Document No :1003446.0
(32) Priority Date :02/03/2010
(33) Name of priority country :U.K.
(86) International Application No :PCT/GB2011/050402
Filing Date :01/03/2011
(87) International Publication No :WO 2011/107786
(61) Patent of Addition to Application Number :NA
Filing Date :NA
(62) Divisional to Application Number :NA
Filing Date :NA

(71)**Name of Applicant :**
1)SAFETRAY PRODUCTS LIMITED
Address of Applicant :1F2 68 Montpelier Park Edinburgh EH10 4NQ U.K.
(72)**Name of Inventor :**
1)GRIEVE Alison

(57) Abstract :
This invention relates to a device (4) for stabilising a drinks tray and also to a drinks tray (2) incorporating the device (4). The device (4) finds use in the hospitality industry and enables a tray bearer to support or stabilise the tray (2) from underneath to reduce the risk of the tray (2) tipping and spilling its contents.

No. of Pages : 31 No. of Claims : 25

(12) PATENT APPLICATION PUBLICATION
(19) INDIA
(22) Date of filing of Application :26/09/2012
(21) Application No.8399/DELNP/2012 A
(43) Publication Date : 21/03/2014

(54) Title of the invention : PACKAGE WITH HIGH YOUNG S MODULUS YARN AND METHOD FOR WINDING THE YARN PACKAGE

(51) International classification :B65H55/04
(31) Priority Document No :10159265.7
(32) Priority Date :07/04/2010
(33) Name of priority country :EPO
(86) International Application No :PCT/EP2011/055462
Filing Date :07/04/2011
(87) International Publication No :WO 2011/124662
(61) Patent of Addition to Application Number :NA
Filing Date :NA
(62) Divisional to Application Number :NA
Filing Date :NA

(71)**Name of Applicant :**
1)DSM IP ASSETS B.V.
Address of Applicant :Het Overloon 1 NL 6411 TE Heerlen Netherlands
(72)**Name of Inventor :**
1)DANSCHUTTER DE Evert Florentinus Florimondus
2)RABE Herbert
3)GOERKE Carsten

(57) Abstract :
The invention concerns an improved yarn package and a method winding a package of high Young s modulus yarn. The package has a low normalized standard deviation in unwinding tension and hence is very suitable for converting into a range of yarn constructions and particularly medical products.

No. of Pages : 21 No. of Claims : 17

(12) PATENT APPLICATION PUBLICATION
(19) INDIA
(22) Date of filing of Application :26/09/2012
(21) Application No.8400/DELNP/2012 A
(43) Publication Date : 21/03/2014

(54) Title of the invention : METHOD FOR CONTROLLING OR REGULATING A MACHINE

(51) International classification :G06F3/01,A61B5/0476
(31) Priority Document No :10157618.9
(32) Priority Date :24/03/2010
(33) Name of priority country :EPO
(86) International Application No :PCT/EP2011/054507
Filing Date :24/03/2011
(87) International Publication No :WO 2011/117331
(61) Patent of Addition to Application Number :NA
Filing Date :NA
(62) Divisional to Application Number :NA
Filing Date :NA

(71)**Name of Applicant :**
1)tecData
Address of Applicant :Bahnhofstrasse 114 CH 9240 Uzwil Switzerland
(72)**Name of Inventor :**
1)OTTE Ralf

(57) Abstract :
The invention relates to a contactless man/machine interface and to an appropriate method for controlling or regulating a machine. The interface comprises a first signal generator which is equipped with at least one component that has a noise signal. By means of calibration according to the invention it is possible to use the signal for controlling or regulating a machine.

No. of Pages : 27 No. of Claims : 10

(12) PATENT APPLICATION PUBLICATION
(19) INDIA
(22) Date of filing of Application :26/09/2012
(21) Application No.8401/DELNP/2012 A
(43) Publication Date : 21/03/2014

(54) Title of the invention : PACKAGE HAVING SHORTENED FLAPS SEALED WITH A TAPE HAVING A LINE OF WEAKNESS

(51) International classification	:B65D5/02,B65D63/10,B65D71/00
(31) Priority Document No	:12/752,587
(32) Priority Date	:01/04/2010
(33) Name of priority country	:U.S.A.
(86) International Application No	:PCT/US2011/030922
Filing Date	:01/04/2011
(87) International Publication No	:WO 2011/123769
(61) Patent of Addition to Application Number	:NA
Filing Date	:NA
(62) Divisional to Application Number	:NA
Filing Date	:NA

(71)**Name of Applicant :**
1)THE PROCTER & GAMBLE COMPANY
Address of Applicant :One Procter & Gamble Plaza Cincinnati Ohio 45202 U.S.A.
(72)**Name of Inventor :**
1)THOMAS Jennifer Lynn
2)EMPEY David Martin

(57) Abstract :
A package (10) having shied flaps (15A 15B 16A 16B) wherein at least two of its flaps are sealed with a tape (30); the tape comprises two or more lateral adhesive strips (31A 31B) and a non adhesive area having a line of weakness (40) positioned there between. An array of packages wherein each package in the array has at least two opposable shortened or shied flaps that are sealed with tape.

No. of Pages : 27 No. of Claims : 15

(12) PATENT APPLICATION PUBLICATION
(19) INDIA
(22) Date of filing of Application :26/09/2012
(21) Application No.8402/DELNP/2012 A
(43) Publication Date : 21/03/2014

(54) Title of the invention : A PROCESS FOR THE HYDROGENATION OF KETOESTERS

(51) International classification :C07C67/31,C07C69/675,C07C227/32
(31) Priority Document No :10004966.7
(32) Priority Date :11/05/2010
(33) Name of priority country :EPO
(86) International Application No :PCT/EP2011/002323
Filing Date :10/05/2011
(87) International Publication No :WO 2011/141160
(61) Patent of Addition to Application Number :NA
Filing Date :NA
(62) Divisional to Application Number :NA
Filing Date :NA

(71)**Name of Applicant :**
1)LONZA LTD
Address of Applicant :M¼nchensteinerstrasse 38 CH 4052 Basel Switzerland
(72)**Name of Inventor :**
1)BICKER Markus
2)CARAUC N D VILA Miguel Angel
3)HECKMANN Golo
4)JAFARPOUR Laleh
5)NEDDEN Hans Guenter
6)MALAN Christophe
7)PIERRON Julien
8)VEGHINI Dario
9)WARD Thomas
10)ZANOTTI GEROSA Antonio

(57) Abstract :
The invention relaters to a process for the production of an (S) or (R) 4 halo 3 hydroxybutyrate comprising reacting a 4 haloacetoacetate with hydrogen in the presence of a solvent the solvent being a solvent mixture which comprises a first solvent and a second solvent wherein the first solvent is an aliphatic alcohol preferably methanol ethanol or propanol and the second solvent is aprotic and comprises at least one oxygen atom; and a catalyst of the formula [RuXYZ]X wherein X is halogen preferably CI or Br or OAc acetoacetate allyl or CIO Y is a bidentate organic ligand having two phosphine groups and Z is an arene preferably cymene benzene xylene or toluene or a polyene preferably a diene or an alkene.

No. of Pages : 32 No. of Claims : 22

(12) PATENT APPLICATION PUBLICATION
(19) INDIA
(22) Date of filing of Application :19/09/2012
(21) Application No.8192/DELNP/2012 A
(43) Publication Date : 21/03/2014

(54) Title of the invention : ARRANGEMENT AND VENTILATION ARRANGEMENT

(51) International classification :B08B15/04,B08B15/00
(31) Priority Document No :10502540
(32) Priority Date :18/03/2010
(33) Name of priority country :Sweden
(86) International Application No :PCT/SE2011/050283
Filing Date :15/03/2011
(87) International Publication No :WO 2011/115558
(61) Patent of Addition to Application Number :NA
Filing Date :NA
(62) Divisional to Application Number :NA
Filing Date :NA

(71)**Name of Applicant :**
1)FUMEX AB
Address of Applicant :Verkstadsvgen 2 S 931 61 Skellefte Sweden
(72)**Name of Inventor :**
1)HEDLUND Lars
2)KARLANDER Lars

(57) Abstract :
This invention concerns an arrangement 1 intended to be used in a ventilation arrangement in order to hold and control an air channel 2. The arrangement 1 comprises a single arm construction 1.1 that is arranged along the outer surface 2A of the air channel. The arm construction 1.1 comprises two arm sections 3 and 4 arranged one after the other a first joint 5 that unites a first arm part 3 with a fixture arrangement 6 that holds and maintains the basic position of the arm construction 1.1 and that makes possible different positioning bending and stretching of the arm construction 1.1 and the air channel 2 a second joint 7 that unites the first arm section 3 with the second arm section 4 and that makes possible different positioning bending and stretching of the arm construction 1.1 and the air channel 2. Each arm section 3 and 4 comprises an extended aluminium profile 8 and 9. The invention concerns also a ventilation arrangement comprising such an arrangement 1.

No. of Pages : 29 No. of Claims : 31

(12) PATENT APPLICATION PUBLICATION
(19) INDIA
(22) Date of filing of Application :19/09/2012
(21) Application No.8193/DELNP/2012 A
(43) Publication Date : 21/03/2014

(54) Title of the invention : VALVE ASSEMBLY

(51) International classification :B65D47/20,B65D1/32,F16K15/14
(31) Priority Document No :2010901148
(32) Priority Date :19/03/2010
(33) Name of priority country :Australia
(86) International Application No :PCT/AU2011/000309
Filing Date :18/03/2011
(87) International Publication No :WO 2011/113112
(61) Patent of Addition to Application Number :NA
Filing Date :NA
(62) Divisional to Application Number :NA
Filing Date :NA

(71)**Name of Applicant :**
1)KAMBOURIS Ambrosios
Address of Applicant :259 Cureton Avenue Mildura Victoria 3500 Australia
(72)**Name of Inventor :**
1)KAMBOURIS Ambrosios

(57) Abstract :
The present invention relates to a valve assembly for dispensing liquid from a container. A manifold (62) includes a first channel extending downwardly from a first inlet (80) to a first side outlet (82). A second channel extends downwardly from a second inlet on the manifold to a second outlet the first side outlet and the second inlet located on the same horizontal plane in reference to the longitudinal axis of the manifold. An elastic membrane (66) sheathed around the manifold extends over the first side outlet and the second inlet. In a first embodiment external fluid pressure causes the membrane to expand under fluid flow to provide for fluid communication through the manifold. In alternate embodiments fluid pressure flowing through the first and second channels causes the elastic membrane to expand enabling fluid communication between the first side outlet and the second inlet.

No. of Pages : 27 No. of Claims : 12

(12) PATENT APPLICATION PUBLICATION
(19) INDIA
(22) Date of filing of Application :19/09/2012
(21) Application No.8194/DELNP/2012 A
(43) Publication Date : 21/03/2014

(54) Title of the invention : METHOD FOR PRESERVING ALUM ADJUVANTS AND ALUM ADJUVANTED VACCINES

(51) International classification :A61K9/08,A61K9/19,A61K31/10
(31) Priority Document No :1005518.4
(32) Priority Date :31/03/2010
(33) Name of priority country :U.K.
(86) International Application No :PCT/GB2011/000497
Filing Date :31/03/2011
(87) International Publication No :WO 2011/121305
(61) Patent of Addition to Application Number :NA
Filing Date :NA
(62) Divisional to Application Number :NA
Filing Date :NA

(71)**Name of Applicant :**
1)STABILITECH LTD.
Address of Applicant :London Bioscience Innovation Centre 2 Royal College Street London NW1 0NH U.K.
(72)**Name of Inventor :**
1)DREW Jeffrey
2)WOODWARD David
3)CORTEYN Amanda

(57) Abstract :
A method for preserving an aluminium salt adjuvant during freezing or drying comprising freezing or drying an aqueous suspension or solution comprising: (a) an aluminium salt adjuvant; (b) a compound of formula (I) or a physiologically acceptable salt or ester thereof or a compound of formula (II) or a physiologically acceptable salt or ester thereof; and (c) optionally one or more sugars.

No. of Pages : 61 No. of Claims : 25

(12) PATENT APPLICATION PUBLICATION
(19) INDIA
(22) Date of filing of Application :26/09/2012
(21) Application No.8407/DELNP/2012 A
(43) Publication Date : 21/03/2014

(54) Title of the invention : METHOD AND SYSTEM FOR DETERMINING SETTINGS FOR DEEP BRAIN STIMULATION

(51) International classification :A61N1/36,A61N1/05
(31) Priority Document No :61/309,074
(32) Priority Date :01/03/2010
(33) Name of priority country :U.S.A.
(86) International Application No :PCT/IB2011/050809
Filing Date :25/02/2011
(87) International Publication No :WO 2011/107917
(61) Patent of Addition to Application Number :NA
Filing Date :NA
(62) Divisional to Application Number :NA
Filing Date :NA

(71)**Name of Applicant :**
1)SAPIENS STEERING BRAIN STIMULATION B.V.
Address of Applicant :High Tech Campus 41 NL 5656 AE Eindhoven Netherlands
2)NEURO NEXUS TECHNOLOGIES INC
(72)**Name of Inventor :**
1)TOADER Emil
2)MARTENS Hubert Ccile Fran§ois
3)DECRE Michel Marcel Jose
4)BUDZELAAR Franciscus Paulus Maria
5)BLANKEN Pieter Gerrit
6)ANDERSON David James

(57) Abstract :
A method and a control system (20) are provided for determining a relation between stimulation settings for a brain stimulation probe (10) and a corresponding V field. The brain stimulation probe (10) comprises multiple stimulation electrodes (11). The V field is an electrical field in brain tissue surrounding the stimulation electrodes (11). The method comprises sequentially applying a test current to n stimulation electrodes (11) n being a number between 2 and the number of stimulation electrodes (11) of the brain stimulation probe (10) for each test current at one of the n stimulation electrodes (11) measuring a resulting excitation voltage at m stimulation electrodes m being a number between 2 and the number of stimulation electrodes (11) of the brain stimulation probe (10) from the stimulation settings and the measured excitation voltages deriving an (m) coupling matrix an element (q p) in the coupling matrix reflecting an amount of electrical impedance between two of the stimulation electrodes (11) and using the coupling matrix for determining the relation between the stimulation settings and the corresponding V field.

No. of Pages : 18 No. of Claims : 6

(12) PATENT APPLICATION PUBLICATION
(19) INDIA
(22) Date of filing of Application :21/09/2012
(21) Application No.8278/DELNP/2012 A
(43) Publication Date : 21/03/2014

(54) Title of the invention : FLEXIBLE REAR BEARING MOUNTING HAVING AN ABUTMENT FOR A TURBINE ENGINE

(51) International classification :F01D25/16,F01D9/04
(31) Priority Document No :1051358
(32) Priority Date :25/02/2010
(33) Name of priority country :France
(86) International Application No :PCT/FR2011/050390
Filing Date :24/02/2011
(87) International Publication No :WO 2011/107694
(61) Patent of Addition to Application Number :NA
Filing Date :NA
(62) Divisional to Application Number :NA
Filing Date :NA

(71)**Name of Applicant :**
1)TURBOMECA
Address of Applicant :F 64510 Bordes France
(72)**Name of Inventor :**
1)DIJOUD Marc Maurice
2)SAHORES Jean Luc Pierre
3)CASAUX BIC Jean Maurice

(57) Abstract :
The invention relates to an assembly formed of a part for mounting at least one shaft bearing (8) of a turbine engine and moreover formed of a support part (11) that forms an abutment for said mounting part. Said mounting part comprises at least one channel (2) through which the engine gases pass and moreover comprises connection parts (3 4) that are capable of connecting said channel to the outer structure (10) of the engine and to a housing holding said bearing. At least one of the connection parts is flexible so as to enable radial movement of said channel (2) the amplitude of said radial movement being limited by at least one of the elements (2 3) of the mounting part coming onto an abutment (12 22) supported by said support part (11). Said support part (11) extends longitudinally with regard to the direction of the rotational axis of the turbine engine so as to generate a turbine shroud (11b) that is intended to be positioned in alignment with a turbine wheel (6) of the turbine engine.

No. of Pages : 17 No. of Claims : 5

(12) PATENT APPLICATION PUBLICATION
(19) INDIA
(22) Date of filing of Application :21/09/2012
(21) Application No.8279/DELNP/2012 A
(43) Publication Date : 21/03/2014

(54) Title of the invention : METHOD FOR PRODUCING CHROMIUM(III) OXIDE

(51) International classification :C01G37/033,C09C1/34,C01G37/00
(31) Priority Document No :10157422.6
(32) Priority Date :23/03/2010
(33) Name of priority country :EUROPEAN UNION
(86) International Application No :PCT/EP2011/054407
Filing Date :23/03/2011
(87) International Publication No :WO 2011/117274
(61) Patent of Addition to Application Number :NA
Filing Date :NA
(62) Divisional to Application Number :NA
Filing Date :NA

(71)**Name of Applicant :**
1)LANXESS Deutschland GmbH
Address of Applicant :51369 Leverkusen Germany
(72)**Name of Inventor :**
1)FRIEDRICH Holger
2)ORTMANN Rainer
3)STENGER Matthias
4)BOLL Matthias

(57) Abstract :
The invention relates to a method for producing chromium(III) oxide by reacting alkali metal chromate with gaseous ammonia subsequently hydrolyzing separating the hydrolyzed product and calcining.

No. of Pages : 23 No. of Claims : 8

(12) PATENT APPLICATION PUBLICATION
(19) INDIA
(22) Date of filing of Application :26/09/2012
(21) Application No.8411/DELNP/2012 A
(43) Publication Date : 21/03/2014

(54) Title of the invention : MANAGING RACE CONDITIONS BETWEEN CIRCUIT SWITCHED FALLBACK REQUESTS

(51) International classification :H04W76/02
(31) Priority Document No :61/318,070
(32) Priority Date :26/03/2010
(33) Name of priority country :U.S.A.
(86) International Application No :PCT/US2011/030114
Filing Date :26/03/2011
(87) International Publication No :WO 2011/120030
(61) Patent of Addition to Application Number :NA
Filing Date :NA
(62) Divisional to Application Number :NA
Filing Date :NA

(71)**Name of Applicant :**
1)INTERDIGITAL PATENT HOLDINGS INC.
Address of Applicant :3411 Silverside Road Concord Plaza Suite 105 Hagley Building Wilmington DE 19810 U.S.A.
(72)**Name of Inventor :**
1)TOOHER Patrick J.
2)WATFA Mahmoud
3)BEHROUZ Aghili
4)OLVERA HERNANDEZ Ulises
5)ADJAKPLE Pascal M.

(57) Abstract :
Circuit switched fallback (CSFB) requests may be managed. A mobile management entity (MME) can detect one or more pending CSFB requests. In response to detecting the pending CSFB request(s) the MME can generate a message that indicates the one or more pending CSFB requests and can communicate the message to one of a mobile switching center (MSC) and a virtual location register (VLR).

No. of Pages : 40 No. of Claims : 10

(12) PATENT APPLICATION PUBLICATION
(19) INDIA
(22) Date of filing of Application :26/09/2012
(21) Application No.8412/DELNP/2012 A
(43) Publication Date : 21/03/2014

(54) Title of the invention : A CONCEALED FIXING RETAINING CLIP FOR ROOF CLADDING SHEETS WITH PROFILED RIBS

(51) International classification :E04D3/36,E04D3/365
(31) Priority Document No :2010201257
(32) Priority Date :29/03/2010
(33) Name of priority country :Australia
(86) International Application No :PCT/AU2011/000353
Filing Date :29/03/2011
(87) International Publication No :WO 2011/120081
(61) Patent of Addition to Application Number :NA
Filing Date :NA
(62) Divisional to Application Number :NA
Filing Date :NA

(71)**Name of Applicant :**
1)BLUESCOPE STEEL LIMITED
Address of Applicant :Level 11 120 Collins Street Melbourne Victoria 3000 Australia
(72)**Name of Inventor :**
1)GALLATY Rodney John

(57) Abstract :
A concealed fixing retaining clip for fixing a roof or other cladding sheet to an underlying support structure is disclosed. The clip comprises a base a pair of side walls that extend from the base and a pair of flanges that define retaining members for engaging re entrant portions in the sides of ribs of cladding sheets. The flanges define arches that extend outwardly and downwardly from upper ends of the side walls. The flanges are mirror images of each other about a centreline plane that passes perpendicularly through the base. Each flange may have a stiffener on each side of a centreline of the flange. The side walls may include inturned side edges that improve the rigidity of the side walls.

No. of Pages : 21 No. of Claims : 21

(12) PATENT APPLICATION PUBLICATION
(19) INDIA
(22) Date of filing of Application :18/09/2012
(21) Application No.8161/DELNP/2012 A
(43) Publication Date : 21/03/2014

(54) Title of the invention : APPARATUS AND METHOD FOR PRE FORMING ELECTRICAL BAR CONDUCTORS IN PARTICULAR FOR BAR WINDINGS OF ELECTRICAL MACHINES

(51) International classification :H02K15/04
(31) Priority Document No :NA
(32) Priority Date :NA
(33) Name of priority country :NA
(86) International Application No :PCT/IT2010/000160
Filing Date :14/04/2010
(87) International Publication No :WO 2011/128919
(61) Patent of Addition to Application Number :NA
Filing Date :NA
(62) Divisional to Application Number :NA
Filing Date :NA

(71)**Name of Applicant :**
1)TECNOMATIC S.P.A.
Address of Applicant :Zona lndustriale Santa Scolastica Via Copernico 2 I 64013 Corropoli (Teramo) Italy
(72)**Name of Inventor :**
1)GUERCIONI Sante

(57) Abstract :
A pre forming apparatus (4) for an electrical bar conductor (8) comprising a punch (12) provided with moving members for exerting a thrust on the conductor (8) during the relative pre forming the punch (12) being axially sliding along a pre forming direction (X X) and being provided with a cursor (20) and with a pre forming head (24) suitable for engaging with the conductor (8). The apparatus (4) comprises a first pre forming chamber (44) suitable for being crossed by the conductor (8) and by the punch (12) during the forward movement of the punch (12) for the pre forming operation.

No. of Pages : 31 No. of Claims : 18

(12) PATENT APPLICATION PUBLICATION
(19) INDIA
(22) Date of filing of Application :26/09/2012
(21) Application No.8421/DELNP/2012 A
(43) Publication Date : 21/03/2014

(54) Title of the invention : AUTONOMOUS MOTORIZATION SYSTEM

(51) International classification :H02J7/00,B60L11/18
(31) Priority Document No :10305321.1
(32) Priority Date :29/03/2010
(33) Name of priority country :EPO
(86) International Application No :PCT/IB2011/051336
Filing Date :29/03/2011
(87) International Publication No :WO 2011/121543
(61) Patent of Addition to Application Number :NA
Filing Date :NA
(62) Divisional to Application Number :NA
Filing Date :NA

(71)**Name of Applicant :**
1)JUAN Antoine
Address of Applicant :Cidex 50 La Chignolle F 16430 Champniers France
2)GARDES Florian
3)PENIGAUD Jr´me
(72)**Name of Inventor :**
1)JUAN Antoine
2)GARDES Florian
3)PENIGAUD Jr´me

(57) Abstract :
An autonomous motorization system comprises at least one electric motor (9) a controller (8) able to drive the operation of the electric motor (9) a set of accumulators of power type (5) adapted for powering the motor (9) a central control unit (7) a base (3) adapted for receiving in a removable manner a set of accumulators of energy type (4) and a DC converter (2) suitable for linking the set of accumulators of energy type (4) to the set of accumulators of power type. The autonomous motorization system makes it possible to address the requirements of high power and also the requirements of significant autonomy whilst allowing easy maintenance and the use of technologies that are not subject to transport restrictions.

No. of Pages : 24 No. of Claims : 24

(12) PATENT APPLICATION PUBLICATION
(19) INDIA
(22) Date of filing of Application :26/09/2012
(21) Application No.8422/DELNP/2012 A
(43) Publication Date : 21/03/2014

(54) Title of the invention : CONTINUOUS VARIABLE CLUTCH

(51) International classification :F16H55/56
(31) Priority Document No :12/722,919
(32) Priority Date :12/03/2010
(33) Name of priority country :U.S.A.
(86) International Application No :PCT/US2011/020623
Filing Date :10/01/2011
(87) International Publication No :WO 2011/112272
(61) Patent of Addition to Application Number :NA
Filing Date :NA
(62) Divisional to Application Number :NA
Filing Date :NA

(71)**Name of Applicant :**
1)TEAM INDUSTRIES INC.
Address of Applicant :105 Park Avenue Northwest Bagley MN 56621 U.S.A.
(72)**Name of Inventor :**
1)MUELLER Michael A.
2)ENGEN Brandon J.
3)BONHAM Brandon R.
4)OKESON Shane C.
5)MOLDE Stephen J.

(57) Abstract :
A continuous variable clutch is provided. The continuous variable clutch includes a first sheave member and a second sheave member. The first sheave member includes a first central hub and a first conical faced surface extending radially from the first central hub. The second sheave member includes a second central hub and a second conical faced surface that extends radially from the second central hub. The second central hub of the second sheave member is received in a cavity of the first central hub such that the first conical faced surface of the first sheave member facing the second conical faced surface of the second sheave portion. The second central hub moving axially within the first central hub based on an amount of torque on the continuous variable clutch. The first sheave member and the second sheave member further forming a central passage to receive an input shaft of a transmission.

No. of Pages : 34 No. of Claims : 17

(12) PATENT APPLICATION PUBLICATION
(19) INDIA
(22) Date of filing of Application :26/09/2012
(21) Application No.8423/DELNP/2012 A
(43) Publication Date : 21/03/2014

(54) Title of the invention : FASTENER

(51) International classification :F16B5/06,F16B19/10
(31) Priority Document No :1006827.8
(32) Priority Date :23/04/2010
(33) Name of priority country :U.K.
(86) International Application No :PCT/GB2011/050474
Filing Date :10/03/2011
(87) International Publication No :WO 2011/131956
(61) Patent of Addition to Application Number :NA
Filing Date :NA
(62) Divisional to Application Number :NA
Filing Date :NA

(71)**Name of Applicant :**
1)AVDEL UK LIMITED
Address of Applicant :Pacific House 2 Swiftfields Watchmead Industrial Estate Welwyn Garden City Hertfordshire AL7 1LY U.K.
(72)**Name of Inventor :**
1)CRUTCHLEY Derek

(57) Abstract :
A fastener (102) for installation in a workpiece (120 122) the fastener comprising a pin (106) and a body (104) comprising a shell (108) and a radially enlarged head (112) wherein a first engaging means comprising a nylon sleeve (110) is located within a bore (116) of the shell and a second engaging means comprising a plurality of barbs (118) is located on the exterior of at least part of the pin shank (142) and wherein the pin shank is insertable into the bore of the body from an end of the body remote from the head end such that the first and second engaging means mutually engage.

No. of Pages : 22 No. of Claims : 6

(12) PATENT APPLICATION PUBLICATION
(19) INDIA
(22) Date of filing of Application :26/09/2012
(21) Application No.8424/DELNP/2012 A
(43) Publication Date : 21/03/2014

(54) Title of the invention : PROCESS FOR CONTINUOUS EMULSION POLYMERIZATION

(51) International classification :C08F2/22,C08F4/28
(31) Priority Document No :10158997.6
(32) Priority Date :01/04/2010
(33) Name of priority country :EPO
(86) International Application No :PCT/EP2011/055129
Filing Date :01/04/2011
(87) International Publication No :WO 2011/121124
(61) Patent of Addition to Application Number :NA
Filing Date :NA
(62) Divisional to Application Number :NA
Filing Date :NA

(71)**Name of Applicant :**
1)DSM IP Assets B.V.
Address of Applicant :Het Overloon 1 NL 6411 TE Heerlen Netherlands
2)DSM Fine Chemicals Austria Nfg. GmbH & Co KG
(72)**Name of Inventor :**
1)LUETTGEN Karsten

(57) Abstract :
The invention relates to a process for the preparation of polymers and to an apparatus for performing this process. The apparatus comprises devices and reactors that are combined in the sequence of first a mixing device second a flow microwave and optionally third one or more additional reactors.

No. of Pages : 12 No. of Claims : 10

(12) PATENT APPLICATION PUBLICATION
(19) INDIA
(22) Date of filing of Application :24/09/2012
(21) Application No.8310/DELNP/2012 A
(43) Publication Date : 21/03/2014

(54) Title of the invention : CONTROLLED RELEASE DOSAGE FORMS FOR HIGH DOSE WATER SOLUBLE AND HYGROSCOPIC DRUG SUBSTANCES

(51) International classification :A61K9/52
(31) Priority Document No :61/317,212
(32) Priority Date :24/03/2010
(33) Name of priority country :U.S.A.
(86) International Application No :PCT/US2011/029802
Filing Date :24/03/2011
(87) International Publication No :WO 2011/119839
(61) Patent of Addition to Application Number :NA
Filing Date :NA
(62) Divisional to Application Number :NA
Filing Date :NA

(71)**Name of Applicant :**
1)JAZZ PHARMACEUTICALS INC.
Address of Applicant :3180 Porter Drive Palo Alto California 94304 U.S.A.
(72)**Name of Inventor :**
1)ALLPHIN Clark Patrick
2)PFEIFFER James Frederick

(57) Abstract :
Controlled release dosage forms are described herein. The controlled release formulations described herein provide prolonged delivery of high dose drugs that are highly water soluble and highly hygroscopic. In specific embodiments controlled release dosage forms for delivery of a drug selected from GHB and pharmaceutically acceptable salts hydrates tautomers solvates and complexes of GHB. The controlled release dosage forms described herein may incorporate both controlled release and immediate release formulations in a single unit dosage form.

No. of Pages : 70 No. of Claims : 108

(12) PATENT APPLICATION PUBLICATION
(19) INDIA
(22) Date of filing of Application :24/09/2012
(21) Application No.8311/DELNP/2012 A
(43) Publication Date : 21/03/2014

(54) Title of the invention : SWITCHGEAR ASSEMBLY FOR MEDIUM VOLTAGE HAVING A SHORT CIRCUIT UNIT

(51) International classification :H01H39/00,H02B11/26,H02B13/065
(31) Priority Document No :10 2010 012 827.9
(32) Priority Date :25/03/2010
(33) Name of priority country :Germany
(86) International Application No :PCT/EP2011/001523
Filing Date :25/03/2011
(87) International Publication No :WO 2011/116985
(61) Patent of Addition to Application Number :NA
Filing Date :NA
(62) Divisional to Application Number :NA
Filing Date :NA

(71)**Name of Applicant :**
1)ABB TECHNOLOGY AG
Address of Applicant :Affolternstrasse 44 CH 8050 Z¼rich Switzerland
(72)**Name of Inventor :**
1)BOZEK Armin
2)HALL Quirin

(57) Abstract :
The invention relates to a switchgear assembly for medium voltage having a short circuit unit according to the preamble of patent claim 1. In order in this case to ensure that the functionality of an extremely rapid short circuiting device is also implemented in a simple manner or can be retrofitted in a simple manner the invention proposes that the short circuiting device be arranged as a three phase unit on a support which can be inserted into and pushed out of a cutout which can be opened in a switchgear assembly housing in a moving manner via an insertion/withdrawal platform.

No. of Pages : 13 No. of Claims : 6

(12) PATENT APPLICATION PUBLICATION
(19) INDIA
(22) Date of filing of Application :24/09/2012
(21) Application No.8312/DELNP/2012 A
(43) Publication Date : 21/03/2014

(54) Title of the invention : ARTHROSCOPIC RESECTION DEVICES

(51) International classification :A61B17/16,A61B17/32
(31) Priority Document No :61/316,860
(32) Priority Date :24/03/2010
(33) Name of priority country :U.S.A.
(86) International Application No :PCT/US2011/029708
Filing Date :24/03/2011
(87) International Publication No :WO 2011/119784
(61) Patent of Addition to Application Number :NA
Filing Date :NA
(62) Divisional to Application Number :NA
Filing Date :NA

(71)**Name of Applicant :**
1)SMITH & NEPHEW INC.
Address of Applicant :1450 Brooks Road Memphis TN 38116 U.S.A.
(72)**Name of Inventor :**
1)LORETH Brian J.

(57) Abstract :
The present disclosure relates to a resection device. The resection device includes an outer tubular member; and an inner tubular member disposed within the outer tubular member the inner tubular member including a burr having a body with flutes extending along a length of the body the flutes including parabolic wave patterns located along surface edges of the flutes. In an embodiment the parabolic wave patterns extend along entire lengths of the flutes. Other resection devices are also disclosed.

No. of Pages : 14 No. of Claims : 10

(12) PATENT APPLICATION PUBLICATION
(19) INDIA
(22) Date of filing of Application :26/09/2012
(21) Application No.8430/DELNP/2012 A
(43) Publication Date : 21/03/2014

(54) Title of the invention : EXTRACTION SYSTEM FOR THE PRODUCTION OF A DRINK USING A CAPSULE

(51) International classification :A47J31/36
(31) Priority Document No :10159189.9
(32) Priority Date :07/04/2010
(33) Name of priority country :EPO
(86) International Application No :PCT/EP2011/054656
Filing Date :25/03/2011
(87) International Publication No :WO 2011/124484
(61) Patent of Addition to Application Number :NA
Filing Date :NA
(62) Divisional to Application Number :NA
Filing Date :NA

(71)**Name of Applicant :**
1)NESTEC S.A.
Address of Applicant :Av. Nestl 55 CH 1800 Vevey Switzerland
(72)**Name of Inventor :**
1)ETTER Stefan

(57) Abstract :
System for preparing drinks from a capsule comprising: a capsule (1) including a body comprising an injection face and an extraction face with an opening and terminating in a collar (5) and a portion for delivery of the drink; the collar terminating in a free edge (8); a device for preparing drinks comprising: a first chamber portion (14) comprising a cavity of a shape suitable for substantially covering the body of the capsule and a clamping surface (23) which is engaged in compression against the collar and a second chamber portion comprising an extraction plate at least one of the two chamber portions being able to move relative to the other chamber portion from an open position in which the capsule is inserted to a closed position in which the capsule is enclosed between the two chamber portions the first chamber portion (14) comprising means (32 38) for hooking the capsule making it possible to keep the capsule in the said cavity of the said first portion during the transition from the closed position to the open position; the capsule comprising complementary means (8 39) suitable for the takeover by these hooking means.

No. of Pages : 25 No. of Claims : 14

(12) PATENT APPLICATION PUBLICATION
(19) INDIA
(22) Date of filing of Application :26/09/2012
(21) Application No.8432/DELNP/2012 A
(43) Publication Date : 21/03/2014

(54) Title of the invention : A FAST DISSOLVING PHARMACEUTICAL COMPOSITION

(51) International classification :A61K9/19,A61K9/20,A61K38/11
(31) Priority Document No :743/DEL/2010
(32) Priority Date :29/03/2010
(33) Name of priority country :India
(86) International Application No :PCT/EP2011/054699
Filing Date :28/03/2011
(87) International Publication No :WO 2011/120904
(61) Patent of Addition to Application Number :NA
Filing Date :NA
(62) Divisional to Application Number :NA
Filing Date :NA

(71)**Name of Applicant :**
1)FERRING B.V.
Address of Applicant :Polaris Avenue 144 NL 2132 JX Hoofddorp Netherlands
(72)**Name of Inventor :**
1)GUPTA Shweta
2)AHUJA Varinder
3)GUNJIKAR Tejas
4)WANNERBERGER Kristin

(57) Abstract :
The subject invention is directed to a pharmaceutical composition comprising an open matrix network carrying a pharmaceutically active ingredient wherein the open matrix network comprises levan.

No. of Pages : 50 No. of Claims : 31

(12) PATENT APPLICATION PUBLICATION
(19) INDIA
(22) Date of filing of Application :24/09/2012
(21) Application No.8332/DELNP/2012 A
(43) Publication Date : 21/03/2014

(54) Title of the invention : METHOD OF MAKING COATED ARTICLE HAVING ANTI BACTERIAL AND/OR ANTI FUNGAL COATING AND RESULTING PRODUCT

(51) International classification :A01N59/16,C03C17/34,C23C14/08
(31) Priority Document No :12/662,443
(32) Priority Date :16/04/2010
(33) Name of priority country :U.S.A.
(86) International Application No :PCT/US2011/000664
Filing Date :12/04/2011
(87) International Publication No :WO 2011/129882
(61) Patent of Addition to Application Number :NA
Filing Date :NA
(62) Divisional to Application Number :NA
Filing Date :NA

(71)**Name of Applicant :**
1)GUARDIAN INDUSTRIES CORP.
Address of Applicant :2300 Harmon Road Auburn Hills MI 48326 1714 U.S.A.
(72)**Name of Inventor :**
1)WANG Jiangping
2)PETRMICHL Rudolph H.
3)LEMMER Jean marc

(57) Abstract :
A method is provided for making a coated article including an anti bacterial and/or anti fungal coating. In certain example embodiments the method includes providing a first sputtering target including Zr; providing a second sputtering target including Zn; and co sputtering from at least the first and second sputtering targets to form a layer comprising ZnxZryOon a glass substrate. A coated article having an anti bacterial and/or anti fungal coating made using this method may also be provided.

No. of Pages : 29 No. of Claims : 23

(12) PATENT APPLICATION PUBLICATION
(19) INDIA
(22) Date of filing of Application :24/09/2012
(21) Application No.8333/DELNP/2012 A
(43) Publication Date : 21/03/2014

(54) Title of the invention : RESIDUAL COMPENSATION FOR A BIOSENSOR

(51) International classification :G01N33/487
(31) Priority Document No :61/316,174
(32) Priority Date :22/03/2010
(33) Name of priority country :U.S.A.
(86) International Application No :PCT/US2011/029318
Filing Date :22/03/2011
(87) International Publication No :WO 2011/119533
(61) Patent of Addition to Application Number :NA
Filing Date :NA
(62) Divisional to Application Number :NA
Filing Date :NA

(71)**Name of Applicant :**
1)BAYER HEALTHCARE LLC
Address of Applicant :555 White Plains Road Tarrytown New York 10591 U.S.A.
(72)**Name of Inventor :**
1)WU Huan Ping
2)HARRISON Bern
3)MAURER Eric

(57) Abstract :
A biosensor system determines analyte concentration from an output signal generated from a light identifiable species or a redox reaction of the analyte. The biosensor system compensates at least 50% of the total error in the output signal with a primary function and compensates a portion of the remaining error with a residual function. The amount of error compensation provided by the primary and residual functions may be adjusted with a weighing coefficient. The compensation method including a primary function and a residual function may be used to determine analyte concentrations having improved accuracy from output signals including components attributable to error.

No. of Pages : 83 No. of Claims : 24

(12) PATENT APPLICATION PUBLICATION
(19) INDIA
(22) Date of filing of Application :24/09/2012
(21) Application No.8334/DELNP/2012 A
(43) Publication Date : 21/03/2014

(54) Title of the invention : APPARATUS FOR USE IN THE FORMATION OF A TOBACCO POUCH PRODUCT

(51) International classification :B65B9/20,A24B13/00,A23L1/22
(31) Priority Document No :61/318,261
(32) Priority Date :26/03/2010
(33) Name of priority country :U.S.A.
(86) International Application No :PCT/IB2011/000961
Filing Date :28/03/2011
(87) International Publication No :WO 2012/004642
(61) Patent of Addition to Application Number :NA
Filing Date :NA
(62) Divisional to Application Number :NA
Filing Date :NA

(71)**Name of Applicant :**
1)PHILIP MORRIS PRODUCTS S.A.
Address of Applicant :Quai Jeanrenaud 3 CH 2000 Neuchatel Switzerland
(72)**Name of Inventor :**
1)RINEHART Steven R.
2)BELCASTRO Marc D.
3)WILLIAMS Dwight D.

(57) Abstract :
An apparatus (110) for use in the formation and filling of a pouched product (10). The apparatus (1 10) includes an elongated outer tubular member (150) the elongated outer tubular member (150) having a first end (152) a second end (154) and an outer surface (156); an elongated inner tubular member (160) the elongated inner tubular member (160) coaxially aligned within the elongated outer tubular member (150) so as to form an annular delivery chamber (170) and having a first end (162) and a second end (164) the first end (162) for receiving the product to be pouched the second end (164) having a plurality of circumferentially spaced exit orifices (158) in fluid communication with the annular delivery chamber (170) and directed radially inwardly the second end for placing the product within the pouch being formed; and an inlet hub (172) adjacent the first end (152) of the elongated outer tubular member (150) and the first end (162) of the elongated inner tubular member (160) the inlet hub (172) having a first inlet (174) in communication with the first end (162) of the elongated inner tubular member (160) and a second inlet (176) in fluid communication with the annular delivery chamber (170); wherein the outer surface (156) of the elongated outer tubular member (150) provides a surface for forming the pouched product (10) thereabout.

No. of Pages : 29 No. of Claims : 27

(12) PATENT APPLICATION PUBLICATION
(19) INDIA
(22) Date of filing of Application :24/09/2012
(21) Application No.8335/DELNP/2012 A
(43) Publication Date : 21/03/2014

(54) Title of the invention : LINK ADVERTISEMENT FOR PATH COMPUTATION IN A COMMUNICATIONS NETWORK

(51) International classification :H04L12/56
(31) Priority Document No :61/323,995
(32) Priority Date :14/04/2010
(33) Name of priority country :U.S.A.
(86) International Application No :PCT/EP2010/067204
Filing Date :10/11/2010
(87) International Publication No :WO 2011/128002
(61) Patent of Addition to Application Number :NA
Filing Date :NA
(62) Divisional to Application Number :NA
Filing Date :NA

(71)**Name of Applicant :**
1)TELEFONAKTIEBOLAGET L M ERICSSON (PUBL)
Address of Applicant :S 164 83 Stockholm Sweden
(72)**Name of Inventor :**
1)IOVANNA Paola
2)ZEMA Cristiano
3)UBALDI Fabio

(57) Abstract :
A path computation element for a communications network receives link advertisements from hybrid nodes (10) of the network and selects paths for new traffic flows based on the received link advertisements. The hybrid node has switching matrices (20 30) operable using different protocols and has internal links between the switching matrices. The link advertisements indicate a maximum and a minimum bandwidth on any one of the internal links for a new traffic flow. The element can select a path via the hybrid node for a new traffic flow according to the bandwidth of the requested new traffic flow and according to the maximum and the minimum bandwidth indicated by the link advertisements. Advertising the maximum and minimum bandwidths available for a single new traffic flow for the internal links can enable more efficient path computation with little additional cost and hence maintain scalability of the link advertisements for larger networks.

No. of Pages : 39 No. of Claims : 17

(12) PATENT APPLICATION PUBLICATION
(19) INDIA
(22) Date of filing of Application :20/09/2012
(21) Application No.8216/DELNP/2012 A
(43) Publication Date : 21/03/2014

(54) Title of the invention : NITRIDE SEMICONDUCTOR LIGHT EMITTING ELEMENT

(51) International classification :H01S5/34,H01L33/06
(31) Priority Document No :2010050369
(32) Priority Date :08/03/2010
(33) Name of priority country :Japan
(86) International Application No :PCT/JP2011/054955
Filing Date :03/03/2011
(87) International Publication No :WO 2011/111606
(61) Patent of Addition to Application Number :NA
Filing Date :NA
(62) Divisional to Application Number :NA
Filing Date :NA

(71)**Name of Applicant :**
1)NICHIA CORPORATION
Address of Applicant :491 100 Oka Kaminaka cho Anan shi Tokushima 7748601 Japan
(72)**Name of Inventor :**
1)KOTANI Yasuhisa

(57) Abstract :
Disclosed is a semiconductor light emitting element having a reduced forward voltage and high efficiency. Specifically disclosed is a nitride semiconductor light emitting element which comprises a substrate and an n type semiconductor layer and a p type semiconductor layer laminated on the substrate through an active region wherein the active region comprises barrier layers that constitute a multiple quantum well structure and a final barrier layer that has a higher thickness than those of the barrier layers and is arranged on the side closest to the p type semiconductor layer and wherein among the barrier layers that constitute the multiple quantum well structure each of two barrier layers adjacent to the final barrier layer has a lower average thickness than those of the other barrier layers.

No. of Pages : 31 No. of Claims : 9

(12) PATENT APPLICATION PUBLICATION
(19) INDIA
(22) Date of filing of Application :27/09/2012
(21) Application No.8450/DELNP/2012 A
(43) Publication Date : 21/03/2014

(54) Title of the invention : METHOD FOR BALANCING AN EXHAUST GAS TURBOCHARGER

(51) International classification :F02B39/16,G01M15/14,F02D23/00
(31) Priority Document No :102010018887.5
(32) Priority Date :30/04/2010
(33) Name of priority country :Denmark
(86) International Application No :PCT/US2011/033834
Filing Date :26/04/2011
(87) International Publication No :WO 2011/137084
(61) Patent of Addition to Application Number :NA
Filing Date :NA
(62) Divisional to Application Number :NA
Filing Date :NA

(71)**Name of Applicant :**
1)BORGWARNER INC.
Address of Applicant :Patent Department 3850 Hamlin Road Auburn Hills Michigan 48326 U.S.A.
(72)**Name of Inventor :**
1)DELLMANN Udo

(57) Abstract :
The present invention relates to a method for balancing an exhaust gas turbocharger having the following method steps: installing the exhaust gas turbocharger in a balancing test stand; driving the exhaust gas turbocharger by loading the turbine with a pressurized fluid; determining the imbalance; and compensating for the determined imbalance. As pressurized fluid for the loading of the turbine use is made of hot gas which is heated to a temperature of higher than 90°C.

No. of Pages : 5 No. of Claims : 4

(12) PATENT APPLICATION PUBLICATION
(19) INDIA
(22) Date of filing of Application :27/09/2012
(21) Application No.8451/DELNP/2012 A
(43) Publication Date : 21/03/2014

(54) Title of the invention : EXHAUST GAS TURBOCHARGER

(51) International classification :F01D25/16,F02B39/00,F01D25/24
(31) Priority Document No :102010020602.4
(32) Priority Date :14/05/2010
(33) Name of priority country :Germany
(86) International Application No :PCT/US2011/035672
Filing Date :09/05/2011
(87) International Publication No :WO 2011/143079
(61) Patent of Addition to Application Number :NA
Filing Date :NA
(62) Divisional to Application Number :NA
Filing Date :NA

(71)**Name of Applicant :**
1)BORGWARNER INC.
Address of Applicant :Patent Department 3850 Hamlin Road Auburn Hills Michigan 48326 U.S.A.
(72)**Name of Inventor :**
1)BECKER Martin
2)SEILER Andre

(57) Abstract :
The present invention relates to an exhaust gas turbocharger (1) having a compressor (2); having a turbine (3); having a bearing housing (4) which is connected at one end to the compressor (2) and at the other turbine side end (5) to the turbine (3) and which has an oil collecting chamber (6) at the turbine side end (5) and which has a plain bearing arrangement (7) for a rotor shaft (8) which plain bearing arrangement comprises a compressor side bearing (9) with an inner bearing surface and an outer circumferential surface and comprises a turbine side bearing (10) which is spaced apart axially from the compressor side bearing (9) and which has an inner bearing surface (11) and an outer circumferential surface (12) wherein the compressor side bearing (9) and the turbine side bearing (10) are of different design.

No. of Pages : 20 No. of Claims : 16

(12) PATENT APPLICATION PUBLICATION
(19) INDIA
(22) Date of filing of Application :27/09/2012
(21) Application No.8452/DELNP/2012 A
(43) Publication Date : 21/03/2014

(54) Title of the invention : CONTROL SHAFT SEAL

(51) International classification :F02B37/22,F01D17/16,F02B37/24
(31) Priority Document No :61/348,877
(32) Priority Date :27/05/2010
(33) Name of priority country :U.S.A.
(86) International Application No :PCT/US2011/037639
Filing Date :24/05/2011
(87) International Publication No :WO 2011/149867
(61) Patent of Addition to Application Number :NA
Filing Date :NA
(62) Divisional to Application Number :NA
Filing Date :NA

(71)**Name of Applicant :**
1)BORGWARNER INC.
Address of Applicant :Patent Department 3850 Hamlin Road Auburn Hills Michigan 48326 U.S.A.
(72)**Name of Inventor :**
1)WARD Daniel N.

(57) Abstract :
The propensity for gas leakage around a shaft which connects volumes of differing pressures in e.g. a turbocharger is minimized in a simple cost effective manner. The addition of a complementary pair of frusto spherical conical or other profiles to the interface of the shaft and its bearing maintain concentricity of the shaft in its bore and thus improve the efficacy of existing sealing protocols.

No. of Pages : 25 No. of Claims : 17

(12) PATENT APPLICATION PUBLICATION
(19) INDIA
(22) Date of filing of Application :27/09/2012
(21) Application No.8453/DELNP/2012 A
(43) Publication Date : 21/03/2014

(54) Title of the invention : TENSIONING ARRANGEMENT HAVING A SWINGING ARM

(51) International classification :F16H7/08,F16H7/18
(31) Priority Document No :61/324,341
(32) Priority Date :15/04/2010
(33) Name of priority country :U.S.A.
(86) International Application No :PCT/US2011/032006
Filing Date :12/04/2011
(87) International Publication No :WO 2011/130190
(61) Patent of Addition to Application Number :NA
Filing Date :NA
(62) Divisional to Application Number :NA
Filing Date :NA

(71)**Name of Applicant :**
1)BORGWARNER INC.
Address of Applicant :Patent Department 3850 Hamlin Road Auburn Hills Michigan 48326 U.S.A.
(72)**Name of Inventor :**
1)MARKLEY George L.

(57) Abstract :
An apparatus (10) for imparting tension to at least one strand of an endless loop power transferring member (12) encircling a drive sprocket (14) and at least one driven sprocket (16a 16b). At least one moveable tensioning arms (18a 18b) is pivotable about fixed pins (26a 26b) on at least two swing arms (20a 20b) and support an inwardly facing shoe (20a 20b) with a power transferring member sliding face (22a 22b). In a multi strand tensioning configuration a link assembly (60) can include at least two link members (32a 32b) pivotally connected to one another at respective first ends (40a 40b) and constrained for limited movement along a fixed slot (36) extending generally along a centerline of the endless loop power transferring member (12) between the drive sprocket (14) and the driven sprockets (16a 16b). The two link members (32a 32b) are pivotally connected individually to opposite ones of the two spaced apart tensioning arms (18a 18b) at second locations (42a 42b).

No. of Pages : 25 No. of Claims : 15

(12) PATENT APPLICATION PUBLICATION
(19) INDIA
(22) Date of filing of Application :20/09/2012
(21) Application No.8228/DELNP/2012 A
(43) Publication Date : 21/03/2014

(54) Title of the invention : POST CARRIER FOR BODY PIERCING INSTRUMENT

(51) International classification :A44C7/00
(31) Priority Document No :12/730768
(32) Priority Date :24/03/2010
(33) Name of priority country :U.S.A.
(86) International Application No :PCT/US2011/029020
Filing Date :18/03/2011
(87) International Publication No :WO 2011/119433
(61) Patent of Addition to Application Number :NA
Filing Date :NA
(62) Divisional to Application Number :NA
Filing Date :NA

(71)**Name of Applicant :**
1)REIL Vladmir
Address of Applicant :521 W. Rosecrans Boulevard Gardena CA 90248 U.S.A.
(72)**Name of Inventor :**
1)REIL Vladmir

(57) Abstract :
Apparatuses and systems for ornamental piercing of body parts are disclosed. Various embodiments of the invention employ a post carrier (122) which includes a cylindrical recess (150) at a first end for holding an ornament (152) of a post (128) for piercing. A wall of the cylindrical recess of the post carrier further includes at least one wall recess (158a 158b) for engaging a point on the ornament (152) of the post. The at least one wall recess may include a spring finger (160a 160b) extending from a side of the at least one wall recess applying a cantilever force to the point on the ornament engaged in the at least one wall recess for holding the post. The post carrier provides more consistent holding force of the post across typical manufacturing tolerance ranges to provide both secure engagement of the post for handling and piercing and later disengagement without discomfort to the user.

No. of Pages : 30 No. of Claims : 23

(12) PATENT APPLICATION PUBLICATION
(19) INDIA
(22) Date of filing of Application :27/09/2012
(21) Application No.8447/DELNP/2012 A
(43) Publication Date : 21/03/2014

(54) Title of the invention : MINERAL WOOL FROM RECYCLABLE MATERIALS

(51) International classification :C03C1/00,C03C13/06,B09B3/00
(31) Priority Document No :61/323,164
(32) Priority Date :12/04/2010
(33) Name of priority country :U.S.A.
(86) International Application No :PCT/US2011/031555
Filing Date :07/04/2011
(87) International Publication No :WO 2011/130090
(61) Patent of Addition to Application Number :NA
Filing Date :NA
(62) Divisional to Application Number :NA
Filing Date :NA

(71)**Name of Applicant :**
1)USG INTERIORS LLC.
Address of Applicant :550 West Adams Street Chicago IL 60661 3676 U.S.A.
(72)**Name of Inventor :**
1)BROWN Martin W.

(57) Abstract :
Provided is a mineral wool that includes recycled material. The mineral wool is characterized by an acid to base ratio within a specified range. Also provided is a method of manufacturing the mineral wool that includes selection of post consumer or post industrial recyclable materials. Application of the mineral wool to products such as an acoustical ceiling panel is also provided.

No. of Pages : 26 No. of Claims : 10

(12) PATENT APPLICATION PUBLICATION
(19) INDIA
(22) Date of filing of Application :27/09/2012
(21) Application No.8448/DELNP/2012 A
(43) Publication Date : 21/03/2014

(54) Title of the invention : TURBOCHARGER

(51) International classification :F02B37/22,F01D17/06,F02B39/00
(31) Priority Document No :102010020864.7
(32) Priority Date :19/05/2010
(33) Name of priority country :Germany
(86) International Application No :PCT/US2011/036907
Filing Date :18/05/2011
(87) International Publication No :WO 2011/146555
(61) Patent of Addition to Application Number :NA
Filing Date :NA
(62) Divisional to Application Number :NA
Filing Date :NA

(71)**Name of Applicant :**
1)BORGWARNER INC.
Address of Applicant :Patent Department 3850 Hamlin Road Auburn Hills Michigan 48326 U.S.A.
(72)**Name of Inventor :**
1)HEIDINGSFELDER Leif
2)RAMB Thomas

(57) Abstract :
The invention relates to a turbocharger (1) with variable turbine geometry (VTG) having a turbine housing (2) with a supply duct (9) for exhaust gases having a turbine rotor (4) which is rotatably mounted in the turbine housing (2); and having a guide grate (18) which surrounds the turbine rotor (4) radially at the outside which has a blade bearing ring (6) which has a multiplicity of guide blades (7) which have in each case one blade shaft (8) mounted in the blade bearing ring (6) which has an adjusting ring (5) which is operatively connected to the guide blades (7) via associated blade levers (20) fastened at one of their ends to the blade shafts (8) each blade lever (20) having at the other end a lever head (23) which can be placed in engagement with an associated engagement recess (24) of the adjusting ring (5) and which has a stop (25) at least for adjusting the minimum throughflow through the nozzle cross sections formed by the guide blades (7) wherein the stop (25) has a fixing peg (32) on which a deformable arched adjusting section (26) is arranged.

No. of Pages : 18 No. of Claims : 13

(12) PATENT APPLICATION PUBLICATION
(19) INDIA
(22) Date of filing of Application :27/09/2012
(21) Application No.8449/DELNP/2012 A
(43) Publication Date : 21/03/2014

(54) Title of the invention : SYSTEM METHOD AND APPARATUS FOR STRANDED CANTED COIL SPRING

(51) International classification :F16F1/34,F16F1/02
(31) Priority Document No :12/765,299
(32) Priority Date :22/04/2010
(33) Name of priority country :U.S.A.
(86) International Application No :PCT/US2011/033644
Filing Date :22/04/2011
(87) International Publication No :WO 2011/133914
(61) Patent of Addition to Application Number :NA
Filing Date :NA
(62) Divisional to Application Number :NA
Filing Date :NA

(71)**Name of Applicant :**
1)SAINT GOBAIN PERFORMANCE PLASTICS CORPORATION
Address of Applicant :1199 South Chillicothe Road Aurora Ohio 44202 U.S.A.
(72)**Name of Inventor :**
1)LENHERT Jon M.
2)COOPER Jay C.

(57) Abstract :
A stranded canted coil spring for electrical contact between adjoining elements is disclosed. The spring is formed from a stranded wire having coils that define a toroid.

No. of Pages : 21 No. of Claims : 30

(12) PATENT APPLICATION PUBLICATION
(19) INDIA
(22) Date of filing of Application :27/09/2012
(21) Application No.8465/DELNP/2012 A
(43) Publication Date : 21/03/2014

(54) Title of the invention : NOVEL ALLENE OXIDE SYNTHASE DERIVED FROM LEMNA PAUCICOSTATA

(51) International classification :C12N15/09,C12N1/15,C12N1/19
(31) Priority Document No :2010-082354
(32) Priority Date :31/03/2010
(33) Name of priority country :Japan
(86) International Application No :PCT/JP2011/058108
Filing Date :30/03/2011
(87) International Publication No :WO 2011/125785
(61) Patent of Addition to Application Number :NA
Filing Date :NA
(62) Divisional to Application Number :NA
Filing Date :NA

(71)**Name of Applicant :**
1)SHISEIDO COMPANY LTD.
Address of Applicant :5 5 Ginza 7 chome Chuo ku Tokyo 1048010 Japan
(72)**Name of Inventor :**
1)YOKOYAMA Mineyuki
2)KAMICHI Sari
3)TAKAGI Kazuteru

(57) Abstract :
Disclosed is a high activity allene oxide synthase that can be used in the production of a plant growth regulator (KODA).

No. of Pages : 35 No. of Claims : 5

(12) PATENT APPLICATION PUBLICATION
(19) INDIA
(22) Date of filing of Application :27/09/2012
(21) Application No.8466/DELNP/2012 A
(43) Publication Date : 21/03/2014

(54) Title of the invention : TRANSACTION SECURITY METHOD AND SYSTEM

(51) International classification :H04M3/51
(31) Priority Document No :1004754.6
(32) Priority Date :22/03/2010
(33) Name of priority country :U.K.
(86) International Application No :PCT/GB2011/000406
Filing Date :22/03/2011
(87) International Publication No :WO 2011/117573
(61) Patent of Addition to Application Number :NA
Filing Date :NA
(62) Divisional to Application Number :NA
Filing Date :NA

(71)**Name of Applicant :**
1)VERITAPE LTD
Address of Applicant :Alkrington Hall West Aldrington Manchester M24 1WD U.K.
(72)**Name of Inventor :**
1)ROSS Cameron Peter Sutherland
2)HEATH James
3)BRIDEN Thomas Edward
4)BRAMFORD Ryan Peter

(57) Abstract :
There is described method and apparatus for processing signals of a telephonic communication where the signals represent sensitive and non sensitive information. A described method comprises processing the signals to provide a first version of the signals that is to be recorded and a second version of the signals that is to be output as audio; monitoring at least the first version of the signals to detect in said at least the first version of the signals one or more instances of one or more predetermined characteristics that represent the sensitive information conveyed by the signals; and modifying said at least the first version of the signals by removing the identified predetermined characteristics from said at least the first version of the signals.

No. of Pages : 69 No. of Claims : 72

(12) PATENT APPLICATION PUBLICATION
(19) INDIA
(22) Date of filing of Application :21/09/2012
(21) Application No.8285/DELNP/2012 A
(43) Publication Date : 21/03/2014

(54) Title of the invention : SYSTEM AND METHOD FOR DELIVERY OF SUSPENSIONS AND OTHER MICROPARTICLE COMPOSITIONS

(51) International classification	:A61M5/178,A61M5/28,A61M5/31
(31) Priority Document No	:61/319762
(32) Priority Date	:31/03/2010
(33) Name of priority country	:U.S.A.
(86) International Application No	:PCT/US2011/030736
Filing Date	:31/03/2011
(87) International Publication No	:WO 2011/123651
(61) Patent of Addition to Application Number	:NA
Filing Date	:NA
(62) Divisional to Application Number	:NA
Filing Date	:NA

(71)**Name of Applicant :**
1)EVONIK DEGUSSA CORPORATION
Address of Applicant :299 JEFFERSON ROAD, PARSIPPANY, NEW JERSEY 07054, U.S.A.
(72)**Name of Inventor :**
1)ERICKSON Signe R.
2)HAGEMEIER Charles J.
3)WINCHESTER Gary A.

(57) Abstract :
Disclosed herein are systems and methods useful for delivery of suspensions and other microparticle compositions and in particular for delivering microparticles at desired dosing levels and eliminating blockages within microparticle suspensions positioned within a delivery device.

No. of Pages : 42 No. of Claims : 62

(12) PATENT APPLICATION PUBLICATION
(19) INDIA
(22) Date of filing of Application :27/09/2012
(21) Application No.8446/DELNP/2012 A
(43) Publication Date : 21/03/2014

(54) Title of the invention : MULTIFUNCTION VALVE

(51) International classification	:F16K11/072,F16K15/03,F16K37/00
(31) Priority Document No	:61/323,994
(32) Priority Date	:14/04/2010
(33) Name of priority country	:U.S.A.
(86) International Application No	:PCT/US2011/030750
Filing Date	:31/03/2011
(87) International Publication No	:WO 2011/130015
(61) Patent of Addition to Application Number	:NA
Filing Date	:NA
(62) Divisional to Application Number	:NA
Filing Date	:NA

(71)**Name of Applicant :**
1)BORGWARNER INC.
Address of Applicant :3850 Hamlin Road Auburn Hills MI 48326 U.S.A.
(72)**Name of Inventor :**
1)BUSATO Murray F.
2)PETERSON Todd R.
3)KEEFOVER Robert D.
4)KIENER Jorn Timm

(57) Abstract :
One embodiment includes product comprising a valve housing constructed and arranged to have a first fluid port a second fluid port and a third fluid port secured therein; a first valve disposed in one of the first fluid port second fluid port or third fluid port and constructed and arranged to block or control flow of fluid there through the first valve having a first face; a valve actuator shaft extending into one of the first fluid port second fluid port or third fluid port and operatively connected to the first valve; a second valve connected to the first valve by a stem portion different from the shaft the second valve having a first face being constructed and arranged to be rotatable with the first valve and the valve shaft so that the shaft is rotatable to move the first valve between closed and open positions the second valve is moved to a position that will block at least a portion of another of the first valve port second valve port or third valve port to restrict the flow of fluid there through and wherein the first valve having a first face arranged at an angle with respect a first face of the second valve. Another embodiment includes a first valve connected to a second valve and wherein the second valve includes a visor portion.

No. of Pages : 47 No. of Claims : 24

(12) PATENT APPLICATION PUBLICATION
(19) INDIA
(22) Date of filing of Application :27/09/2012
(21) Application No.8459/DELNP/2012 A
(43) Publication Date : 21/03/2014

(54) Title of the invention : CELLULOSE COMPOSITE

(51) International classification :C08L1/02,A23L1/03,C08L5/00
(31) Priority Document No :2010-082373
(32) Priority Date :31/03/2010
(33) Name of priority country :Japan
(86) International Application No :PCT/JP2011/058020
Filing Date :30/03/2011
(87) International Publication No :WO 2011/125742
(61) Patent of Addition to Application Number :NA
Filing Date :NA
(62) Divisional to Application Number :NA
Filing Date :NA

(71)**Name of Applicant :**
1)Asahi Kasei Chemicals Corporation
Address of Applicant :1 105 Kanda Jinbocho Chiyoda ku Tokyo 1018101 Japan
(72)**Name of Inventor :**
1)OBATA Haruko
2)YAMASAKI Naoaki

(57) Abstract :
Disclosed is a cellulose composite which comprises cellulose and a hydrophilic gum the cellulose composite giving a 1 mass% aqueous dispersion thereof which has a storage modulus (G) of 0.06 Pa or more when the pH thereof is 4.

No. of Pages : 100 No. of Claims : 13

(12) PATENT APPLICATION PUBLICATION
(19) INDIA
(22) Date of filing of Application :27/09/2012
(21) Application No.8460/DELNP/2012 A
(43) Publication Date : 21/03/2014

(54) Title of the invention : ORGANOSILICONES

(51) International classification	:C08G77/46,C11D3/37,D06M15/643
(31) Priority Document No	:61/320133
(32) Priority Date	:01/04/2010
(33) Name of priority country	:U.S.A.
(86) International Application No	:PCT/US2011/030847
Filing Date	:01/04/2011
(87) International Publication No	:WO 2011/123727
(61) Patent of Addition to Application Number	:NA
Filing Date	:NA
(62) Divisional to Application Number	:NA
Filing Date	:NA

(71)**Name of Applicant :**
1)THE PROCTER & GAMBLE COMPANY
Address of Applicant :One Procter & Gamble Plaza Cincinnati Ohio 45202 U.S.A.
(72)**Name of Inventor :**
1)PANANDIKER Rajan Keshav
2)ZANNONI Luke Andrew
3)SMITH Steven Daryl
4)MCCHAIN Robert Joseph
5)KLUESENER Bernard William
6)SEGER Rebecca Ann
7)MENKHAUS Julie Ann
8)SOLINSKY Mark Gregory
9)WAGNER Matthew Scott

(57) Abstract :
The present application relates to organosilicones and compositions such as consumer products comprising such organosilicones as well as processes for making and using such organosilicones and such compositions. Such compositions comprising such organosilicones are easier to formulate and provide more economical and superior care benefits when compared to current silicone containing compositions.

No. of Pages : 126 No. of Claims : 12

(12) PATENT APPLICATION PUBLICATION
(19) INDIA
(22) Date of filing of Application :27/09/2012
(21) Application No.8461/DELNP/2012 A
(43) Publication Date : 21/03/2014

(54) Title of the invention : FABRIC SOFTENER

(51) International classification :C11D3/00,C11D1/62,C11D3/20
(31) Priority Document No :61/319,914
(32) Priority Date :01/04/2010
(33) Name of priority country :U.S.A.
(86) International Application No:PCT/US2011/030672
Filing Date :31/03/2011
(87) International Publication No :WO 2011/123606
(61) Patent of Addition to Application Number :NA
Filing Date :NA
(62) Divisional to Application Number :NA
Filing Date :NA

(71)**Name of Applicant :**
1)THE PROCTER & GAMBLE COMPANY
Address of Applicant :One Procter & Gamble Plaza Cincinnati Ohio 45202 U.S.A.
(72)**Name of Inventor :**
1)DEMEYERE Hugo Jean Marie

(57) Abstract :
Methods of making a fabric softener composition comprising 1% to 49% of the bis (2 hydroxyethyl) dimethylammonium chloride fatty acid ester by weight of the composition are provided.

No. of Pages : 17 No. of Claims : 10

(12) PATENT APPLICATION PUBLICATION
(19) INDIA
(22) Date of filing of Application :27/09/2012
(21) Application No.8462/DELNP/2012 A
(43) Publication Date : 21/03/2014

(54) Title of the invention : INCREASING PLANT GROWTH BY MODULATING OMEGA AMIDASE EXPRESSION IN PLANTS

(51) International classification :C12N15/82,A01H5/00
(31) Priority Document No :61/308,971
(32) Priority Date :28/02/2010
(33) Name of priority country :U.S.A.
(86) International Application No :PCT/US2011/026552
Filing Date :28/02/2011
(87) International Publication No :WO 2011/106794
(61) Patent of Addition to Application Number :NA
Filing Date :NA
(62) Divisional to Application Number :NA
Filing Date :NA

(71)**Name of Applicant :**
1)LOS ALAMOS NATIONAL SECURITY LLC
Address of Applicant :Los Alamos National Laboratory LC/IP MS A187 Los Alamos NM 87545 U.S.A.
2)UNVERSITY OF MAINE SYSTEM BOARD OF TRUSTEES
(72)**Name of Inventor :**
1)UNKEFER Pat J.
2)ANDERSON Penelope S.
3)KNIGHT Thomas J.

(57) Abstract :
The present disclosure relates to compositions and methods for increasing the leaf to root ratio of the signal metabolite 2 oxoglutaramate and related proline molecules in plants by modulating levels of co-amidase to increase nitrogen use efficiency resulting in enhanced growth faster growth rates greater seed and fruit/pod yields earlier and more productive flowering increased tolerance to high salt conditions and increased biomass yields.

No. of Pages : 179 No. of Claims : 72

(12) PATENT APPLICATION PUBLICATION
(19) INDIA
(22) Date of filing of Application :25/09/2012
(21) Application No.8357/DELNP/2012 A
(43) Publication Date : 21/03/2014

(54) Title of the invention : CHEMICAL COMPOUNDS

(51) International classification :A01N43/38,A61K31/405
(31) Priority Document No :61/317,476
(32) Priority Date :25/03/2010
(33) Name of priority country :U.S.A.
(86) International Application No :PCT/US2011/029511
Filing Date :23/03/2011
(87) International Publication No :WO 2011/119663
(61) Patent of Addition to Application Number :NA
Filing Date :NA
(62) Divisional to Application Number :NA
Filing Date :NA

(71)**Name of Applicant :**
1)GLAXOSMITHKLINE LLC
Address of Applicant :One Franklin Plaza 200 North 16th Street Philadelphia PA 19102 U.S.A.
(72)**Name of Inventor :**
1)AXTEN Jeffrey Michael
2)GRANT Seth Wilson
3)HEERDING Dirk A.
4)MEDINA Jesus Raul
5)ROMERIL Stuart Paul
6)TANG Jun

(57) Abstract :
The invention is directed to substituted indoline derivatives. Specifically the invention is directed to compounds according to Formula I wherein R1, R2 and R3 are defined herein. The compounds of the invention are inhibitors of PERK and can be useful in the treatment of cancer ocular diseases and diseases associated with activated unfolded protein response pathways such as Alzheimer s disease stroke Type 1 diabetes Parkinson disease Huntington s disease amyotrophic lateral sclerosis myocardial infarction cardiovascular disease atherosclerosis and arrhythmias and more specifically cancers of the breast colon pancreatic and lung. Accordingly the invention is further directed to pharmaceutical compositions comprising a compound of the invention. The invention is still further directed to methods of inhibiting PERK activity and treatment of disorders associated therewith using a compound of the invention or a pharmaceutical composition comprising a compound of the invention.

No. of Pages : 282 No. of Claims : 44

(12) PATENT APPLICATION PUBLICATION
(19) INDIA
(22) Date of filing of Application :25/09/2012
(21) Application No.8358/DELNP/2012 A
(43) Publication Date : 21/03/2014

(54) Title of the invention : TFPI INHIBITORS AND METHODS OF USE

(51) International classification :A61K38/18,A61K38/16,C40B40/10
(31) Priority Document No :61/315,758
(32) Priority Date :19/03/2010
(33) Name of priority country :U.S.A.
(86) International Application No :PCT/US2011/024604
Filing Date :11/02/2011
(87) International Publication No :WO 2011/115712
(61) Patent of Addition to Application Number :NA
Filing Date :NA
(62) Divisional to Application Number :NA
Filing Date :NA

(71)**Name of Applicant :**
1)BAXTER INTERNATIONAL INC
Address of Applicant :One Baxter Parkway Deerfield IL 60015 U.S.A.
2)BAXTER HEAL THCARE S.A.
(72)**Name of Inventor :**
1)DOCKAL Michael
2)HARTMANN Rudolf
3)FRIES Markus
4)SCHEIFLINGER Friedrich
5)EHRLICH Hartmut
6)REINEKE Ulrich
7)OSTERKAMP Frank
8)POLAKOWSKI Thomas

(57) Abstract :
The invention provides peptides that bind Tissue Factor Pathway Inhibitor (TFPI) including TFPI inhibitory peptides and compositions thereof. The peptides may be used to inhibit a TFPI enhance thrombin formation in a clotting factor deficient subject increase blood clot formation in a subject treat a blood coagulation disorder in a subject purify TFPI and identify a TFPI binding compound.

No. of Pages : 1610 No. of Claims : 107

(12) PATENT APPLICATION PUBLICATION
(19) INDIA
(22) Date of filing of Application :25/09/2012
(21) Application No.8359/DELNP/2012 A
(43) Publication Date : 21/03/2014

(54) Title of the invention : PLANT PEPTIDE GAMMA ZEIN FOR DELIVERY OF BIOMOLECULES INTO PLANT CELLS

(51) International classification :A01H5/00,C07K14/415,C12N15/29
(31) Priority Document No :61/319764
(32) Priority Date :31/03/2010
(33) Name of priority country :U.S.A.
(86) International Application No :PCT/US2011/027475
Filing Date :08/03/2011
(87) International Publication No :WO 2011/126644
(61) Patent of Addition to Application Number :NA
Filing Date :NA
(62) Divisional to Application Number :NA
Filing Date :NA

(71)**Name of Applicant :**
1)DOW AGROSCIENCES LLC
Address of Applicant :9330 Zionsville Road Indianapolis Indiana 46268 U.S.A.
(72)**Name of Inventor :**
1)SAMBOJU Narasimha Chary
2)SAMUEL Jayakumar Pon
3)LIN Gaofeng
4)WEBB Steven R.
5)BURROUGHS Frank G

(57) Abstract :
A method of introducing a molecule of interest into a plant cell having a cell wall includes interacting a gamma zein peptide with a molecule of interest to form a gamma zein linked structure. The gamma zein linked structure is then placed in contact with the plant cell having a cell wall and allowing uptake of the gamma zein linked structure into the plant cell. Alternatively a gene of interest can be expressed in a plant cell having an intact cell wall by interacting a gamma zein peptide with the gene of interest to form a gamma zein linked gene structure allowing uptake of the gamma zein linked gene structure into the plant cell and expressing the gene of interest in the plant cell and its progeny.

No. of Pages : 41 No. of Claims : 20

(12) PATENT APPLICATION PUBLICATION
(19) INDIA
(22) Date of filing of Application :28/09/2012
(21) Application No.8487/DELNP/2012 A
(43) Publication Date : 21/03/2014

(54) Title of the invention : HIGH MANNOSE GLYCANS

(51) International classification :C12Q1/00,C12P21/06,H01J49/00
(31) Priority Document No :61/321,857
(32) Priority Date :07/04/2010
(33) Name of priority country :U.S.A.
(86) International Application No :PCT/US2011/031637
Filing Date :07/04/2011
(87) International Publication No :WO 2011/127322
(61) Patent of Addition to Application Number :NA
Filing Date :NA
(62) Divisional to Application Number :NA
Filing Date :NA

(71)**Name of Applicant :**
1)MOMENTA PHARMACEUTICALS INC.
Address of Applicant :675 West Kendall Street Cambridge MA 02142 U.S.A.
(72)**Name of Inventor :**
1)COLLINS Brian E.
2)DUFFNER Jay
3)BOSQUES Carlos J.
4)BULIK Dorota A.
5)MYETTE James
6)MEADOR James

(57) Abstract :
Methods and compositions related to high mannose glycans are described.

No. of Pages : 43 No. of Claims : 67

(12) PATENT APPLICATION PUBLICATION
(19) INDIA
(22) Date of filing of Application :28/09/2012
(21) Application No.8499/DELNP/2012 A
(43) Publication Date : 21/03/2014

(54) Title of the invention : HEAT TREATMENT METHOD

(51) International classification :C21D1/18,C21D1/00
(31) Priority Document No :2010-070242
(32) Priority Date :25/03/2010
(33) Name of priority country :Japan
(86) International Application No :PCT/JP2011/057249
Filing Date :24/03/2011
(87) International Publication No :WO 2011/118737
(61) Patent of Addition to Application Number :NA
Filing Date :NA
(62) Divisional to Application Number :NA
Filing Date :NA

(71)**Name of Applicant :**
1)IHI Corporation
Address of Applicant :1 1 Toyosu 3 chome Koto ku Tokyo 1358710 Japan
(72)**Name of Inventor :**
1)KATSUMATA Kazuhiko

(57) Abstract :
The disclosed heat treatment method involves a first step in which a mist form coolant is supplied to mist cool a body to be treated maintained at a prescribed temperature to a target temperature greater than or equal to a first transformation point temperature near which the composition of the body to be treated begins to transform to a prescribed composition; a second step performed after said first step in which the body to be treated is maintained for a prescribed time period in a state in which the mist coolant supply has been stopped; and a third step performed after said second step in which the body to be treated is cooled to a temperature less than or equal to the first transformation point temperature. By means of the disclosed heat treatment method the creation of non uniformities and deformations in the composition of the body to be treated are suppressed.

No. of Pages : 36 No. of Claims : 8

(12) PATENT APPLICATION PUBLICATION
(19) INDIA
(22) Date of filing of Application :21/09/2012
(21) Application No.8286/DELNP/2012 A
(43) Publication Date : 21/03/2014

(54) Title of the invention : PKC INHIBITORS FOR THE TREATMENT OF B CELL LYMPHOMA HAVING CHRONIC ACTIVE B CELL RECEPTOR SIGNALLING

(51) International classification	:A61K31/00,A61K31/404,A61K31/436
(31) Priority Document No	:61/319013
(32) Priority Date	:30/03/2010
(33) Name of priority country	:U.S.A.
(86) International Application No	:PCT/EP2011/054709
Filing Date	:28/03/2011
(87) International Publication No	:WO 2011/120911
(61) Patent of Addition to Application Number	:NA
Filing Date	:NA
(62) Divisional to Application Number	:NA
Filing Date	:NA

(71)**Name of Applicant :**
1)NOVARTIS AG
Address of Applicant :Lichtstrasse 35 CH 4056 Basel Switzerland
(72)**Name of Inventor :**
1)SCHULER Walter
2)STEGMEIER Frank P.
3)WARMUTH Markus

(57) Abstract :
The present invention demonstrates that chronic active BCR signaling through CD79A/B confers a strong dependence on downstream PKCb kinase signaling. Hence provided herein is a method for inhibiting the growth of B cell lymphoma having chronic active B cell receptor signaling or inhibiting the growth of cancers with molecular lesions that lead to chronic active BCR signaling by administering to a patient in need of such treatment a therapeutically effective amount of a PKC inhibitor or a use of a PKC inhibitor to inhibit the growth of B cell lymphoma having chronic active B cell receptor signaling or to inhibit the growth of cancers with molecular lesions that lead to chronic active BCR signaling.

No. of Pages : 28 No. of Claims : 32

(12) PATENT APPLICATION PUBLICATION
(19) INDIA
(22) Date of filing of Application :21/09/2012
(21) Application No.8287/DELNP/2012 A
(43) Publication Date : 21/03/2014

(54) Title of the invention : METHODS AND COMPOSITIONS FOR IMPROVING IMPLANT OSSEOINTEGRATION

(51) International classification :A61K31/675,A61L27/28,A61K45/06
(31) Priority Document No :61/324901
(32) Priority Date :16/04/2010
(33) Name of priority country :U.S.A.
(86) International Application No :PCT/EP2011/055970
Filing Date :14/04/2011
(87) International Publication No :WO 2011/128424
(61) Patent of Addition to Application Number :NA
Filing Date :NA
(62) Divisional to Application Number :NA
Filing Date :NA

(71)**Name of Applicant :**
1)NOVARTIS AG
Address of Applicant :Lichtstrasse 35 CH 4056 Basel Switzerland
(72)**Name of Inventor :**
1)JUNKER Uwe
2)KNEISSEL Michaela
3)KRAMER Ina
4)SCHLOTTIG Falko

(57) Abstract :
The disclosed methods uses and articles are in the field of orthopedic and dental implants. In particular the disclosure relates to compositions and methods for improving the osseointegration of such implants.

No. of Pages : 41 No. of Claims : 20

(12) PATENT APPLICATION PUBLICATION
(19) INDIA
(22) Date of filing of Application :21/09/2012
(21) Application No.8288/DELNP/2012 A
(43) Publication Date : 21/03/2014

(54) Title of the invention : METHOD AND DEVICE FOR PRODUCING A HIGHLY SELECTIVELY ABSORBING COATING ON A SOLAR ABSORBER COMPONENT AND SOLAR ABSORBER HAVING SUCH A COATING

(51) International classification :F24J2/48,C25D11/22,C25D7/00
(31) Priority Document No :10 2010 012 573.3
(32) Priority Date :23/03/2010
(33) Name of priority country :Germany
(86) International Application No :PCT/EP2011/054376
Filing Date :22/03/2011
(87) International Publication No :WO 2011/117256
(61) Patent of Addition to Application Number :NA
Filing Date :NA
(62) Divisional to Application Number :NA
Filing Date :NA

(71)**Name of Applicant :**
1)ODB TEC GMBH & CO.KG
Address of Applicant :Bussardweg 12 41468 Neuss Germany
(72)**Name of Inventor :**
1)OSTERMANN Dieter

(57) Abstract :
The invention relates to a method for producing a selectively absorbing coating (3) on a solar absorber component (10) comprising the following steps: providing a substrate (1) having a metal surface determining the inner surface of the metal surface determining the charge quantity per unit area required for generating the absorbing coating in accordance with the inner surface; electrolytically generating the absorbing coating (3) in a first step by direct current anodizing the metal surface of the substrate (1) forming a porous oxide coating and in a second step by alternating current pigmenting the pores of the oxide coating direct current anodizing and alternating current pigmenting take place until the charge quantity per unit area determined for each step from the inner surface is reached wherein the ratio between the charge quantity per unit area for the direct current anodizing and the charge quantity per unit area for the alternating current pigmenting / = 0.65 to 0.8. The invention further relates to a solar absorbing component (10) produced according to said method.

No. of Pages : 40 No. of Claims : 18

(12) PATENT APPLICATION PUBLICATION
(19) INDIA
(22) Date of filing of Application :21/09/2012
(21) Application No.8289/DELNP/2012 A
(43) Publication Date : 21/03/2014

(54) Title of the invention : ORAL CARE COMPOSITION COMPRISING STANNOUS AND NITRATE IONS

(51) International classification :A61K8/19,A61Q11/00
(31) Priority Document No :10159201.2
(32) Priority Date :07/04/2010
(33) Name of priority country :EPO
(86) International Application No :PCT/EP2011/055458
Filing Date :07/04/2011
(87) International Publication No :WO 2011/124659
(61) Patent of Addition to Application Number :NA
Filing Date :NA
(62) Divisional to Application Number :NA
Filing Date :NA

(71)**Name of Applicant :**
1)GABA INTERNATIONAL HOLDING AG
Address of Applicant :Grabetsmattweg CH 4106 Therwil Switzerland
(72)**Name of Inventor :**
1)HECKENDORN Rene
2)CERESA Alan
3)SCHERRER Elisabeth

(57) Abstract :
An oral care composition comprising a) an aqueous phase; b) stannous ions solvated in the aqueous phase; c) nitrates solvated in the aqueous phase; wherein the total content of said nitrates is such that the molar amount of nitrogen in the aqueous phase measurable as nitrate is less than 2 times the molar amount of solvated stannous ions; and d) a flavour substance which is preferably solvated dispersed or emulgated in the aqueous phase. Disclosed are also containers containing the composition; and processes and uses for stabilising stannous ions against oxidation using nitrates.

No. of Pages : 23 No. of Claims : 17

(12) PATENT APPLICATION PUBLICATION
(19) INDIA
(22) Date of filing of Application :28/09/2012
(21) Application No.8505/DELNP/2012 A
(43) Publication Date : 21/03/2014

(54) Title of the invention : SELECTION AND USE OF HOST CELLS FOR PRODUCTION OF GLYCOPROTEINS

(51) International classification :A61K45/00,C07K1/00
(31) Priority Document No :61/321,863
(32) Priority Date :07/04/2010
(33) Name of priority country :U.S.A.
(86) International Application No :PCT/US2011/031641
Filing Date :07/04/2011
(87) International Publication No :WO 2011/127325
(61) Patent of Addition to Application Number :NA
Filing Date :NA
(62) Divisional to Application Number :NA
Filing Date :NA

(71)**Name of Applicant :**
1)MOMENTA PHARMACEUTICALS INC.
Address of Applicant :675 West Kendall Street Cambridge MA 02142 U.S.A.
(72)**Name of Inventor :**
1)COLLINS Brian E.
2)DUFFNER Jay
3)FARUTIN Victor
4)BHATNAGAR Naveen
5)THIRUNEELAKANTAPILLAI Lakshmanan
6)BOSQUES Carlos J.
7)VENKATARAMAN Ganesh

(57) Abstract :
A method of making a glycoprotein having a selected glycostructure.

No. of Pages : 69 No. of Claims : 12

(12) PATENT APPLICATION PUBLICATION
(19) INDIA
(22) Date of filing of Application :24/09/2012
(21) Application No.8342/DELNP/2012 A
(43) Publication Date : 21/03/2014

(54) Title of the invention : TRANSMISSION DRIVING DEVICE

(51) International classification :F16H61/34,F16H61/32
(31) Priority Document No :2010-067990
(32) Priority Date :24/03/2010
(33) Name of priority country :Japan
(86) International Application No :PCT/JP2011/056736
Filing Date :22/03/2011
(87) International Publication No :WO 2011/118553
(61) Patent of Addition to Application Number :NA
Filing Date :NA
(62) Divisional to Application Number :NA
Filing Date :NA

(71)**Name of Applicant :**
1)JTEKT CORPORATION
Address of Applicant :5 8 Minamisemba 3 chome Chuo ku Osaka shi Osaka 5428502 Japan
(72)**Name of Inventor :**
1)KAGAWA Hiroki
2)YUKITAKE Yasuhiro

(57) Abstract :
Provided is a transmission driving device wherein the rotation of a rotating body which is released from an input shaft is inhibited thereby being able to prevent a shift actuation member and/or a select actuation member from being displaced when one of said actuation members is inputted with a reverse input. When an input shaft (30) and a first rotor (31) are connected a first electromagnetic coil (36) is in an excitation state and a second electromagnetic coil (37) is in a non excitation state. In said state a second magnetic ring (70) does not get absorbed towards the second electromagnetic coil (37) a seventh facing (71) and an eighth facing (72) which are secured to the second magnetic ring (70) are engaged and a second rotor (32) and a casing (5) are connected. When connected to the casing (5) the second rotor (32) cannot rotate. As a consequence when the second rotor (32) is inputted with a reverse input it is possible to prevent a shift shaft (8) from rotating.

No. of Pages : 78 No. of Claims : 6

(12) PATENT APPLICATION PUBLICATION
(19) INDIA
(22) Date of filing of Application :24/09/2012
(21) Application No.8343/DELNP/2012 A
(43) Publication Date : 21/03/2014

(54) Title of the invention : COMPOUNDS AND THERAPEUTIC USES THEREOF

(51) International classification :A01N47/28
(31) Priority Document No :61/309,342
(32) Priority Date :01/03/2010
(33) Name of priority country :U.S.A.
(86) International Application No :PCT/US2011/026752
Filing Date :01/03/2011
(87) International Publication No :WO 2011/109441
(61) Patent of Addition to Application Number :NA
Filing Date :NA
(62) Divisional to Application Number :NA
Filing Date :NA

(71)**Name of Applicant :**
1)MYREXIS INC.
Address of Applicant :305 Chipeta Way Salt Lake City UT 84108 U.S.A.
(72)**Name of Inventor :**
1)WILLARDSEN Adam J.
2)LOCKMAN Jeffrey W.
3)MURPHY Brett R.
4)JUDD Weston R.
5)KIM In Chul
6)KIM Se Ho
7)ZIGAR Daniel Feodore
8)YAGER Kraig M.
9)FLEISCHER Tracey C.
10)TERRY LORENZO Ryan T.
11)BONIFACE Jay J.
12)PARKER Daniel P.
13)MCALEXANDER Ian A.
14)BURSAVICH Matthew Gregory
15)DASTRUP David M.

(57) Abstract :
The invention relates to compounds pharmaceutical compositions and methods useful for treating cancer systemic or chronic inflammation rheumatoid arthritis diabetes obesity T cell mediated autoimmune disease ischemia and other complications associated with these diseases and disorders.

No. of Pages : 391 No. of Claims : 237

(12) PATENT APPLICATION PUBLICATION
(19) INDIA
(22) Date of filing of Application :27/09/2012
(21) Application No.8471/DELNP/2012 A
(43) Publication Date : 21/03/2014

(54) Title of the invention : HYDROGEL PRECURSOR FORMULATION AND PRODUCTION PROCESS THEREOF

(51) International classification :C08G65/00
(31) Priority Document No :10160796.8
(32) Priority Date :22/04/2010
(33) Name of priority country :EPO
(86) International Application No :PCT/EP2011/056187
Filing Date :19/04/2011
(87) International Publication No :WO 2011/131642
(61) Patent of Addition to Application Number :NA
Filing Date :NA
(62) Divisional to Application Number :NA
Filing Date :NA

(71)**Name of Applicant :**
1)QGel SA
Address of Applicant :Pse c Epfl CH 1015 Lausanne Switzerland
(72)**Name of Inventor :**
1)RIZZI Simone
2)LTOLF Matthias

(57) Abstract :
The present invention relates to a hydrogel precursor formulation its process of production as well as a kit comprising said formulation and a method of production of a hydrogel using said formulation. The precursor formulation comprises at least one structural compound preferably vinyl sulfone (acrylated branched) poly(ethylene glycol) and at least one linker compound preferably a peptide with two cysteines wherein said structural compound and said linker compound are polymerizable by a selective reaction between a nucleophile and a conjugated unsaturated bond or group. The precursor formulation is in the form of a powder.

No. of Pages : 24 No. of Claims : 22

(12) PATENT APPLICATION PUBLICATION
(19) INDIA
(22) Date of filing of Application :27/09/2012
(21) Application No.8472/DELNP/2012 A
(43) Publication Date : 21/03/2014

(54) Title of the invention : CONCENTRATED PROTEIN FORMULATIONS AND USES THEREOF

(51) International classification :A61K9/08,A61K47/48,A61K39/395
(31) Priority Document No :61/339,191
(32) Priority Date :01/03/2010
(33) Name of priority country :U.S.A.
(86) International Application No :PCT/US2011/026647
Filing Date :01/03/2011
(87) International Publication No :WO 2011/109365
(61) Patent of Addition to Application Number :NA
Filing Date :NA
(62) Divisional to Application Number :NA
Filing Date :NA

(71)**Name of Applicant :**
1)PROGENICS PHARMACEUTICALS INC.
Address of Applicant :777 Old Saw Mill River Road Tarrytown New York 10591 U.S.A.
(72)**Name of Inventor :**
1)CHEN Tracy T.

(57) Abstract :
Described are low viscosity hypotonic formulations containing one or more proteins e.g. antibodies at high concentration uses of the formulations and articles of manufacture. In particular the formulations are useful and beneficial for the subcutaneous administration or delivery of a high concentration of a protein drug such as an antibody to a subject who is afflicted with a disease or condition that is treatable by the protein drug.

No. of Pages : 51 No. of Claims : 73

(12) PATENT APPLICATION PUBLICATION
(19) INDIA
(22) Date of filing of Application :28/09/2012
(21) Application No.8500/DELNP/2012 A
(43) Publication Date : 21/03/2014

(54) Title of the invention : MEMS STRUCTURE FOR AN ANGULAR RATE SENSOR

(51) International classification :G01C19/56
(31) Priority Document No :10160201.9
(32) Priority Date :16/04/2010
(33) Name of priority country :EPO
(86) International Application No :PCT/EP2011/056057
Filing Date :15/04/2011
(87) International Publication No :WO 2011/128449
(61) Patent of Addition to Application Number :NA
Filing Date :NA
(62) Divisional to Application Number :NA
Filing Date :NA

(71)**Name of Applicant :**
1)SENSONOR AS
Address of Applicant :PO Box 1004 N 3194 Horten Norway
(72)**Name of Inventor :**
1)KITTISLAND Gjermund
2)LAPADATU Daniel
3)JACOBSEN Sissel

(57) Abstract :
A micro-electromechanical system (MEMS) structure for an angular rate sensor, the structure being positioned b e tween first and second silicon-insulator composite wafers formed of a plurality of structured silicon parts, electrically isolated from each other by an insulator material, the structure comprising: a mono-crystalline silicon substrate structured to form a sensing system and a frame, the sensing system being completely de-coupled from and surrounded by the frame, which is positioned r between engaging surfaces of the first and second composite wafers such that the sensing system is hermetically sealed within a cavity defined by the first and second composite wafers and the frame, the sensing system including: two seismic masses having front and back surfaces; two driving beams, each having a first end attached to a seismic mass and a second end attached to the - first and second composite wafers by means of fixed pedestals provided on the silicon substrate; and a bending spring arranged to directly connect between, and synchronise a primary motion of, the two seismic masses, each of the seismic masses being arranged to have a first degree of rotational freedom about an axis that is substantially perpendicular to the plane of the silicon substrate, and the seismic masses and driving beams being arranged to have a second degree of rotational freedom about an axis substantial ly coincident with the longitudinal axis of the driving beams; means for generating and detecting the primary motion consisting of a primary oscillation of the two seismic

No. of Pages : 29 No. of Claims : 17

(12) PATENT APPLICATION PUBLICATION
(19) INDIA
(22) Date of filing of Application :26/09/2012
(21) Application No.8426/DELNP/2012 A
(43) Publication Date : 21/03/2014

(54) Title of the invention : FLAT CLINCH STAPLER

(51) International classification :B25C5/02
(31) Priority Document No :NA
(32) Priority Date :NA
(33) Name of priority country :NA
(86) International Application No :PCT/IB2011/000132
Filing Date :27/01/2011
(87) International Publication No :WO 2012/101463
(61) Patent of Addition to Application Number :NA
Filing Date :NA
(62) Divisional to Application Number :NA
Filing Date :NA

(71)**Name of Applicant :**
1)KANIN (India)
Address of Applicant :B XXX 6754 Focal Point Ludhiana 141010 Punjab India
(72)**Name of Inventor :**
1)RANJAN D.
2)BASSI Navdeep
3)SINGH Inderjit

(57) Abstract :
A flat clinch stapler comprises: a base portion (20) having upstanding bearing pieces (21) at its rear end for supporting a first transverse pivot axis (22) and a floating clincher table (11); a magazine (5) having a U shaped cross section pivotably mounted at its rear end about said first pivot axis; a driver arm (1) carrying a driver blade (9) and being pivotably mounted at its rear end to said first pivot axis; and a handle member (300) pivotably mounted about a second transverse axis (310) in the bearing pieces offset relative to said first pivot axis in a direction to the front end of the base portion and acting on the driver arm at a position even further to the front end of the stapler. The magazine bottom wall guides the free ends of the legs of staples within the magazine. An elongated intermediate member (3) disposed between said magazine and said driver arm is pivotably mounted to said first pivot axis and has an inverted U shaped cross section comprising a top wall and side walls downwardly extending inbetween and along said side walls of said magazine the bottom edges of said side walls of said intermediate member engaging the cross members of staples within said magazine.

No. of Pages : 10 No. of Claims : 5

(12) PATENT APPLICATION PUBLICATION
(19) INDIA
(22) Date of filing of Application :26/09/2012
(21) Application No.8427/DELNP/2012 A
(43) Publication Date : 21/03/2014

(54) Title of the invention : MODULAR LED LIGHTING SYSTEM

(51) International classification :H05B33/08
(31) Priority Document No :10 2010 003 060.0
(32) Priority Date :19/03/2010
(33) Name of priority country :Germany
(86) International Application No :PCT/EP2011/054184
Filing Date :21/03/2011
(87) International Publication No :WO 2011/113951
(61) Patent of Addition to Application Number :NA
Filing Date :NA
(62) Divisional to Application Number :NA
Filing Date :NA

(71)**Name of Applicant :**
1)TRIDONIC AG
Address of Applicant :Obere Allmeind 2 CH 8755 Ennenda Switzerland
2)TRIDONIC GMBH & CO KG
(72)**Name of Inventor :**
1)ZIMMERMANN Michael
2)PEREIRA Eduardo
3)HARTMANN Martin

(57) Abstract :
The invention relates to a modular LED light comprising a first module (1) to which an input voltage (9) preferably an AC supply voltage is guided said first module comprising a second sub module (B) preferably an insulating unit a DC voltage separating the supply voltage by a galvanic separation being provided on the outlet of said insulating unit and a control unit (G). Said LED light also comprises a second module (2) preferably a light management module comprising an additional sub module (C) which is fed by the DC initial voltage of the first module (1) preferably a clocked constant flow source which is controlled by a control unit (E) of the second module (2) and an LED module (F) which comprises at least one LED path (8) and which is supplied by the additional sub module (C).

No. of Pages : 62 No. of Claims : 10

(12) PATENT APPLICATION PUBLICATION
(19) INDIA
(22) Date of filing of Application :26/09/2012
(21) Application No.8429/DELNP/2012 A
(43) Publication Date : 21/03/2014

(54) Title of the invention : ENHANCING THE APPEARANCE OF FOOD PRODUCTS

(51) International classification :A23P1/08,A21C15/00,A21D13/00
(31) Priority Document No :61/316,729
(32) Priority Date :23/03/2010
(33) Name of priority country :U.S.A.
(86) International Application No :PCT/EP2011/051731
Filing Date :07/02/2011
(87) International Publication No :WO 2011/117013
(61) Patent of Addition to Application Number :NA
Filing Date :NA
(62) Divisional to Application Number :NA
Filing Date :NA

(71)**Name of Applicant :**
1)NESTEC S.A.
Address of Applicant :Av. Nestl 55 CH 1800 Vevey Switzerland
(72)**Name of Inventor :**
1)BELZOWSKI Marla D.
2)NILSSON Urban
3)SHARMA Richa

(57) Abstract :
This invention provides processes and apparatus for enhancing the appearance of food products. The browning agents are applied or dispensed onto food products (52) during their manufacture by food grade controlled droplet dispensing heads (62a 62b) (or head). In preferred embodiments the dispensing heads (62a 62b) are controlled by a controller such as a programmed PC type computer in dependence on sensor data such as electromechanical optical or image sensor (54) data. The controller and sensors operate so that different food items have selected browning agents properly applied or dispensed without waste or overspray. The invention also provides food products (53) which have been enhanced according to the provided processes and apparatus with browning agents.

No. of Pages : 33 No. of Claims : 20

(12) PATENT APPLICATION PUBLICATION
(19) INDIA
(22) Date of filing of Application :28/09/2012
(21) Application No.8519/DELNP/2012 A
(43) Publication Date : 21/03/2014

(54) Title of the invention : METHOD FOR GENERATING A MULTIPHASE PWM SIGNAL

(51) International classification :H03K7/08
(31) Priority Document No :102010003513.0
(32) Priority Date :31/03/2010
(33) Name of priority country :Germany
(86) International Application No :PCT/EP2011/054042
Filing Date :17/03/2011
(87) International Publication No :WO 2011/120815
(61) Patent of Addition to Application Number :NA
Filing Date :NA
(62) Divisional to Application Number :NA
Filing Date :NA

(71)**Name of Applicant :**
1)ROBERT BOSCH GMBH
Address of Applicant :Postfach 30 02 20 70442 Stuttgart Germany
(72)**Name of Inventor :**
1)SCHMITT Stephen
2)THOSS Dieter

(57) Abstract :
What is proposed are: a method and a circuit arrangement (10) for generating a multiphase PWM signal (12). In this case a number of PWM generators (20 22 24 26) are provided which each have a counter (30 54 74 94) two comparators (32 34 56 58 76 78 96 98) and a state storage device (36 64 84 104) wherein each PWM generator (20 22 24 26) outputs a PWM signal (14 42 62 82) which represents one phase of the multiphase PWM signal (12) wherein the PWM generators(20 22 24 26) are coupled to one another via multiplexers (38 66 86 106) with the result that the counters (30 54 74 94) of the PWM generators (20 22 24 26) which are coupled to one another have the same clock.

No. of Pages : 9 No. of Claims : 10

(12) PATENT APPLICATION PUBLICATION
(19) INDIA
(22) Date of filing of Application :26/09/2012
(21) Application No.8408/DELNP/2012 A
(43) Publication Date : 21/03/2014

(54) Title of the invention : METHOD AND SYSTEM FOR PHYSICAL RESOURCES CONFIGURATION AND SIGNAL TRANSMISSION WHEN COMMUNICATION SYSTEMS COEXIST

(51) International classification :H04B7/26
(31) Priority Document No :201010268337.2
(32) Priority Date :30/08/2010
(33) Name of priority country :China
(86) International Application No :PCT/CN2010/078283
Filing Date :01/11/2010
(87) International Publication No :WO 2012/027924
(61) Patent of Addition to Application Number :NA
Filing Date :NA
(62) Divisional to Application Number :NA
Filing Date :NA

(71)**Name of Applicant :**
1)ZTE CORPORATION
Address of Applicant :ZTE Plaza Keji Road South Hi Tech Industrial Park Nanshan Shenzhen Guangdong 518057 China
(72)**Name of Inventor :**
1)NING Ding
2)GUAN Yanfeng
3)FANG Huiying

(57) Abstract :
A method and system for physical resources configuration and signal transmission when the communication systems coexist are applied to the situation of adjacent frequency coexistence between Worldwide Interoperability for Microwave Access (Wimax) system and Long Term Evolution (LTE) system with Time Division Duplex (TDD) mode. The method includes the following steps: the physical resources of the Wimax 16e frame are configured according to the LTE frame configuration information as follows: the number of down symbols in the Wimax 16e frame and the shift time of the Wimax 16e frame compared with the half frame of the LTE frame are configured according to the conditions on which the down region of the Wimax 16e frame is included in the down region of the LTE frame in time domain; the number of up symbols and the time length of Transmission Transition Gap (TTG) in the Wimax 16e frame are configured according to the conditions on which the up region of the Wimax 16e frame is included in the up region of the LTE frame in time domain; wherein the up/down handover period of LTE frame is 5ms. The cross interference of adjacent frequency coexistence between the LTE system and the Wimax 16e system can be conquered with this invention.

No. of Pages : 42 No. of Claims : 17

(12) PATENT APPLICATION PUBLICATION
(19) INDIA
(22) Date of filing of Application :26/09/2012
(21) Application No.8409/DELNP/2012 A
(43) Publication Date : 21/03/2014

(54) Title of the invention : OPERATION CONTROL METHOD OF TANDEM ROLLING MILL AND METHOD FOR PRODUCING HOT ROLLED STEEL SHEET USING SAME

(51) International classification :B21B37/72,B21B1/26
(31) Priority Document No :2010-087447
(32) Priority Date :06/04/2010
(33) Name of priority country :Japan
(86) International Application No :PCT/JP2011/056926
Filing Date :23/03/2011
(87) International Publication No :WO 2011/125498
(61) Patent of Addition to Application Number :NA
Filing Date :NA
(62) Divisional to Application Number :NA
Filing Date :NA

(71)**Name of Applicant :**
1)SUMITOMO METAL INDUSTRIES LTD.
Address of Applicant :5 33 Kitahama 4 chome Chuo ku Osaka shi Osaka 5410041 Japan
2)MITSUBISHI HITACHI METALS MACHINERY INC.
(72)**Name of Inventor :**
1)NIKKUNI Daisuke
2)FUKUSHIMA Suguhiro
3)WASHIKITA Yoshiro
4)KAJIHARA Tetsuo
5)HORII Kenji
6)SATO Taro

(57) Abstract :
Disclosed is an operation control method of tandem rolling mill that enables rolling under high pressure at a latter stage stand that is of the tandem rolling mill and that is necessary in such purposes as the production of fine grained steel. Further disclosed is a method for producing a hot rolled steel sheet. The operation control method of a tandem rolling mill includes a first step for determining outgoing side sheet thickness at each stand when rolling a constant region of a rolled member and a second step for determining the outgoing side sheet thickness of each stand when rolling the tip of the rolled member in a manner so that a pre fastening load is no greater than a set value; the rolled member is rolled in a manner so as to become the outgoing side sheet thickness determined in the second step at least until the very tip of the rolled member is engaged by each stand; the constant region of the rolled member is rolled to the outgoing side sheet thickness determined in the first step by means of the N m+1 th stand to the N th stand; and the outgoing side sheet thickness from the N m+1 th stand to the N th stand determined in the second step is thicker than the outgoing side sheet thickness determined in the first step. The method for producing a hot rolled steel sheet has a step that rolls a steel sheet using a hot finishing mill array the operation of which is controlled by said operation control method.

No. of Pages : 50 No. of Claims : 6

(12) PATENT APPLICATION PUBLICATION
(19) INDIA
(22) Date of filing of Application :26/09/2012
(21) Application No.8410/DELNP/2012 A
(43) Publication Date : 21/03/2014

(54) Title of the invention : FLUIDIZING MIXTURE FOR A HYDRAULIC COMPOSITION

(51) International classification :C04B20/02,C04B24/26,C04B28/02
(31) Priority Document No :1052501
(32) Priority Date :02/04/2010
(33) Name of priority country :France
(86) International Application No :PCT/FR2011/050694
Filing Date :29/03/2011
(87) International Publication No :WO 2011/121230
(61) Patent of Addition to Application Number :NA
Filing Date :NA
(62) Divisional to Application Number :NA
Filing Date :NA

(71)**Name of Applicant :**
1)LAFARGE
Address of Applicant :61 rue des Belles Feuilles F 75116 Paris France
(72)**Name of Inventor :**
1)VILLARD Emmanuel
2)MOSQUET Martin
3)RINALDI David
4)NARANJO Horacio
5)LAYE Jean Michel

(57) Abstract :
Mixture for a hydraulic composition comprising: an inerting agent for at least partly neutralizing the deleterious effects of impurities of the hydraulic composition on the workability of the hydraulic composition; a first superplasticizer that differs from the inerting agent; and a second superplasticizer that differs from the first superplasticizer and from the inerting agent and has a maximum fluidizing action at 20°C that occurs after the maximum fluidizing action at 20°C of the first superplasticizer.

No. of Pages : 33 No. of Claims : 13

(12) PATENT APPLICATION PUBLICATION
(19) INDIA
(22) Date of filing of Application :24/09/2012
(21) Application No.8324/DELNP/2012 A
(43) Publication Date : 21/03/2014

(54) Title of the invention : CLAMPING ARRANGEMENT FOR AN ELECTRICAL DEVICE

(51) International classification :H01R9/24
(31) Priority Document No :10 2010 019 022.5
(32) Priority Date :03/05/2010
(33) Name of priority country :Denmark
(86) International Application No :PCT/EP2011/055749
Filing Date :13/04/2011
(87) International Publication No :WO 2011/138135
(61) Patent of Addition to Application Number :NA
Filing Date :NA
(62) Divisional to Application Number :NA
Filing Date :NA

(71)**Name of Applicant :**
1)SIEMENS AKTIENGESELLSCHAFT
Address of Applicant :Wittelsbacherplatz 2 80333 M¼nchen Germany
(72)**Name of Inventor :**
1)GEITNER Manuel
2)HOLMER Wolfgang

(57) Abstract :
The invention relates to a clamping arrangement for an electrical device (10) having a connection zone (11) which has a plurality of connection poles (12) wherein each connection pole (12) has a clamping unit (13 13a 13b) which can be used to electrically connect an electrical conductor (14). The invention is distinguished in that the connection zone (11) is formed in a modular manner by disks (15).

No. of Pages : 14 No. of Claims : 7

(12) PATENT APPLICATION PUBLICATION
(19) INDIA
(22) Date of filing of Application :24/09/2012
(21) Application No.8325/DELNP/2012 A
(43) Publication Date : 21/03/2014

(54) Title of the invention : MACRO MANAGEMENT SYSTEM FOR AN ENGINEERING SYSTEM FOR PARAMETERIZING SWITCHGEAR

(51) International classification :G06F9/44,G05B19/05
(31) Priority Document No :10 2010 019 142.6
(32) Priority Date :03/05/2010
(33) Name of priority country :Germany
(86) International Application No :PCT/EP2011/055748
Filing Date :13/04/2011
(87) International Publication No :WO 2011/138134
(61) Patent of Addition to Application Number :NA
Filing Date :NA
(62) Divisional to Application Number :NA
Filing Date :NA

(71)**Name of Applicant :**
1)SIEMENS AKTIENGESELLSCHAFT
Address of Applicant :Wittelsbacherplatz 2 80333 M¼nchen Germany
(72)**Name of Inventor :**
1)TURNAUS Andre

(57) Abstract :
The invention relates to a macro management system (1) for an engineering system (2) for parameterizing switchgear using core modules. The invention is distinguished by the fact that the macro management system has as core modules a creation module (4) which is designed to create macros (13) a display/catalogue module (5) which is designed to present all macros (13) present in the system (1) an import module (6) which is designed to integrate already existing macros (13) into the system (1) and an export module which is designed to distribute macros (13) which have already been created. The macro management system (1) is connected to a graphical user interface (3) of the engineering system (2) and the project engineer can be guided with various options to a restricted final selection of macros (13) via a plurality of question levels (20 21 22).

No. of Pages : 23 No. of Claims : 7

(12) PATENT APPLICATION PUBLICATION
(19) INDIA
(22) Date of filing of Application :24/09/2012
(21) Application No.8326/DELNP/2012 A
(43) Publication Date : 21/03/2014

(54) Title of the invention : STACKABLE CLAMPING CARRIER ELEMENTS FOR FLAT ASSEMBLIES

(51) International classification :H01R13/514,H01R9/24,H01R12/72
(31) Priority Document No :10 2010 019 020.9
(32) Priority Date :03/05/2010
(33) Name of priority country:Germany
(86) International Application No :PCT/EP2011/054925
Filing Date :30/03/2011
(87) International Publication No :WO 2011/138092
(61) Patent of Addition to Application Number :NA
Filing Date :NA
(62) Divisional to Application Number :NA
Filing Date :NA

(71)**Name of Applicant :**
1)SIEMENS AKTIENGESELLSCHAFT
Address of Applicant :Wittelsbacherplatz 2 80333 M¼nchen Germany
(72)**Name of Inventor :**
1)GEITNER Manuel
2)HOLMER Wolfgang

(57) Abstract :
The invention relates to a clamping carrier element for flat assemblies having a housing. The invention is distinguished in that the clamping carrier element (1) is formed on the upper face of the housing in such a way that a plurality of clamping carrier elements (1) can be stacked one above the other by means of a connection technique.

No. of Pages : 13 No. of Claims : 10

(12) PATENT APPLICATION PUBLICATION
(19) INDIA
(22) Date of filing of Application :24/09/2012
(21) Application No.8327/DELNP/2012 A
(43) Publication Date : 21/03/2014

(54) Title of the invention : METHOD AND APPARATUS FOR POUCHING TOBACCO HAVING A HIGH MOISTURE CONTENT

(51) International classification :B65B37/14,B65B9/20,B65B37/20
(31) Priority Document No :61/318,212
(32) Priority Date :26/03/2010
(33) Name of priority country :U.S.A.
(86) International Application No :PCT/IB2011/000986
Filing Date :28/03/2011
(87) International Publication No :WO 2011/117732
(61) Patent of Addition to Application Number :NA
Filing Date :NA
(62) Divisional to Application Number :NA
Filing Date :NA

(71)**Name of Applicant :**
1)PHILIP MORRIS PRODUCTS S.A.
Address of Applicant :Quai Jeanrenaud 3 CH 2000 Neuchatel Switzerland
(72)**Name of Inventor :**
1)WILLIAMS Dwight D.

(57) Abstract :
An apparatus for dispensing charges of high OV moist smokeless tobacco (MST) includes a rotary metering device (10). The rotary metering device (10) includes a lower disk (18) a metering disk (12) a plurality of cavities (14) in the metering disk (12); and at least one vacuum housing (16 17) located around the periphery of the lower disk (18) and in communication with the plurality of cavities (14). A vacuum is applied to the cavities (14) to aid in the filling of the cavities (14) and an air discharge mechanism (54) ejects a charge of the MST from each cavity at a discharge station (72).

No. of Pages : 19 No. of Claims : 28

(12) PATENT APPLICATION PUBLICATION
(19) INDIA
(22) Date of filing of Application :24/09/2012
(21) Application No.8328/DELNP/2012 A
(43) Publication Date : 21/03/2014

(54) Title of the invention : MICROBIAL ENGINEERING FOR THE PRODUCTION OF FATTY ACIDS AND FATTY ACID DERIVATIVES

(51) International classification	:C12N5/10,C12N15/11,C12N15/63
(31) Priority Document No	:61/309,782
(32) Priority Date	:02/03/2010
(33) Name of priority country	:U.S.A.
(86) International Application No	:PCT/US2011/026903
Filing Date	:02/03/2011
(87) International Publication No	:WO 2011/109548
(61) Patent of Addition to Application Number	:NA
Filing Date	:NA
(62) Divisional to Application Number	:NA
Filing Date	:NA

(71)**Name of Applicant :**
1)MASSACHUSETTS INSTITUTE OF TECHNOLOGY
Address of Applicant :77 Massachusetts Avenue Cambridge MA 02139 U.S.A.
(72)**Name of Inventor :**
1)STEPHANOPOULOS Gregory
2)ABIDI Syed Hussain Imam

(57) Abstract :
Some aspects of this invention relate to methods useful for the conversion of a carbon source to a biofuel or biofuel precursor using engineered microbes. Some aspects of this invention relate to the discovery of a key regulator of lipid metabolism in microbes. Some aspects of this invention relate to engineered microbes for biofuel or biofuel precursor production.

No. of Pages : 141 No. of Claims : 138

(12) PATENT APPLICATION PUBLICATION
(19) INDIA
(22) Date of filing of Application :24/09/2012
(21) Application No.8329/DELNP/2012 A
(43) Publication Date : 21/03/2014

(54) Title of the invention : EFFICIENT SIGNALING FOR MACHINE TYPE COMMUNICATION

(51) International classification :H04W4/14
(31) Priority Document No :61/316596
(32) Priority Date :23/03/2010
(33) Name of priority country :U.S.A.
(86) International Application No :PCT/US2011/029550
Filing Date :23/03/2011
(87) International Publication No :WO 2011/119680
(61) Patent of Addition to Application Number :NA
Filing Date :NA
(62) Divisional to Application Number :NA
Filing Date :NA

(71)**Name of Applicant :**
1)INTERDIGITAL PATENT HOLDINGS INC.
Address of Applicant :3411 Silverside Road Concord Plaza Suite 105 Hagley Building Wilmington DE 19810 U.S.A.
(72)**Name of Inventor :**
1)AGHILI Behrouz
2)MURRAY Joseph M.
3)GAUVREAU Jean Louis
4)PINHEIRO Ana Lucia A.
5)PANI Diana
6)CAI Lujing
7)GOMES Sylvie
8)CAVE Christopher

(57) Abstract :
Disclosed herein are embodiments for Machine Type Communication (MTC). The techniques disclosed may reduce signaling by transmitting MTC data over control planes and avoiding a full cycle of connection procedures typically required for transmission. MTC data may be directly appended to a control plane message in addition in order to reduce the signaling load a WTRU may autonomously release the connection without being told by the network. Techniques may be used to indicate a network provider s machine type communication (MTC) capability. The MTC services or capabilities that may be provided by a respective network operator may be communicated to a WTRU.

No. of Pages : 53 No. of Claims : 17

(12) PATENT APPLICATION PUBLICATION
(19) INDIA
(22) Date of filing of Application :28/09/2012
(21) Application No.8523/DELNP/2012 A
(43) Publication Date : 21/03/2014

(54) Title of the invention : CONTAINER WITH THERMAL MANAGEMENT

(51) International classification :A47J41/00
(31) Priority Document No :10 160 459.3
(32) Priority Date :20/04/2010
(33) Name of priority country :EPO
(86) International Application No :PCT/EP2011/056070
Filing Date :18/04/2011
(87) International Publication No :WO 2011/131595
(61) Patent of Addition to Application Number :NA
Filing Date :NA
(62) Divisional to Application Number :NA
Filing Date :NA

(71)**Name of Applicant :**
1)NESTEC S.A.
Address of Applicant :Av. Nestl 55 CH 1800 Vevey Switzerland
(72)**Name of Inventor :**
1)COOKE Charles Brian Durler
2)JARISCH Christian
3)PALMER Timothy John
4)PERENTES Alexandre
5)ENGELBRECHT Pirow

(57) Abstract :
A thermal storage device (1) for storing and maintaining a body (5) such as liquid at a constant storage temperature different to a temperature external (1) to such device comprises: a container (4) for containing this body at the constant storage temperature; and a thermal source (3) for compensating heat transfer resulting from a thermal gradient between the external temperature and the constant storage temperature. The thermal source comprises a mass (31) for accumulating thermal energy and for transferring heat from or to the container to compensate said heat transfer resulting from the thermal gradient and maintain the body at the constant storage temperature.

No. of Pages : 29 No. of Claims : 15

(12) PATENT APPLICATION PUBLICATION
(19) INDIA
(22) Date of filing of Application :28/09/2012
(21) Application No.8524/DELNP/2012 A
(43) Publication Date : 21/03/2014

(54) Title of the invention : ENHANCING THE NUTRITIONAL VALUE OF FOOD PRODUCTS

(51) International classification :A23P1/08,A23L1/00,A23L1/22
(31) Priority Document No :61/316,740
(32) Priority Date :23/03/2010
(33) Name of priority country :U.S.A.
(86) International Application No :PCT/EP2011/051729
Filing Date :07/02/2011
(87) International Publication No :WO 2011/117012
(61) Patent of Addition to Application Number :NA
Filing Date :NA
(62) Divisional to Application Number :NA
Filing Date :NA

(71)**Name of Applicant :**
1)NESTEC S.A.
Address of Applicant :Av. Nestl 55 CH 1800 Vevey Switzerland
(72)**Name of Inventor :**
1)BELZOWSKI Marla D.
2)NILSSON Urban
3)SHARMA Richa

(57) Abstract :
This invention provides processes and apparatus for enhancing the nutritional value of food products. Nutrition enhancing agents are applied or dispensed onto or into food products during their manufacture by food grade controlled droplet dispensing heads (or head). In preferred embodiments the dispensing heads are controlled by a controller such as a programmed PC type computer in dependence on sensor data such as electromechanical optical or image sensor data. The controller and sensors operate so that different food items can have selected nutrition enhancing agents properly applied or dispensed without waste or overspray. The invention also provides food products which have been enhanced according to the provided processes and apparatus with nutrition enhancing agents.

No. of Pages : 33 No. of Claims : 20

(12) PATENT APPLICATION PUBLICATION
(19) INDIA
(22) Date of filing of Application :28/09/2012
(21) Application No.8526/DELNP/2012 A
(43) Publication Date : 21/03/2014

(54) Title of the invention : METHOD OF COMPENSATION OF MOMENTARY LACK OF FILTER SEGMENTS IN MULTI SEGMENT FILTER MANUFACTURING LINE AND DEVICE ENABLING COMPENSATION OF MOMENTARY LACK OF FILTER SEGMENTS IN MULTI SEGMENT FILTER MANUFACTURING LINE

(51) International classification :A24D3/02
(31) Priority Document No :P-390871
(32) Priority Date :29/03/2010
(33) Name of priority country :Poland
(86) International Application No :PCT/PL2011/000034
Filing Date :28/03/2011
(87) International Publication No :WO 2011/122971
(61) Patent of Addition to Application Number :NA
Filing Date :NA
(62) Divisional to Application Number :NA
Filing Date :NA

(71)**Name of Applicant :**
1)INTERNATIONAL TOBACCO MACHINERY
Address of Applicant :POLAND Sp. z o.o. ul. Warsztatowa 19 A 26 600 Radom Poland
(72)**Name of Inventor :**
1)HOFFMANN Hans Reiner

(57) Abstract :
The method consists in that in case of occurrence of a gap (12) on a path (9) feeding out sets of filter segments (5) of a flute (6) of a cutting drum (3) caused by lack of a filter rod in a flute (6) the operation of the units situated before the gap (12) is slowed down with simultaneous acceleration of the operation of the units situated behind the gap (12) until the moment of elimination of the gap (12) the lack of a filter rod in the flute (6) being detected by means of sensors (13 14) and the process of compensation beginning at the moment when the set of segments (5) guided by the pusher (8) of the out feeding unit (7) being before the gap (12) is taken over by a delivery unit (H) and ends at the moment of elimination of the gap (12). Detection of the lack of a filter rod by the sensors (13 14) in one of the modules (I) causes the slowdown of the operation of all units in other modules (1) until the moment of elimination of the gap (12) whereafter all modules (I) continue the operation with nominal speed. The delivery unit (11) has the form of a gripper holding the set of segments (5) after taking it over form the out feeding unit (7) whereas the device (11) may be constituted by a drum (15) with worm like lug (16) on the surface or an endless chain (25) with catches (26) or a set of two endless belts (35). Close to the cutting drum (3) is situated at least one sensor (13) detecting the lack of a filter rod in the flute (6) while in the zone of the out feeding path (9) is situated at least one second sensor (14) confirming the correctness of the readings of the first sensor (13).

No. of Pages : 17 No. of Claims : 11

(12) PATENT APPLICATION PUBLICATION
(19) INDIA
(22) Date of filing of Application :25/09/2012
(21) Application No.8362/DELNP/2012 A
(43) Publication Date : 21/03/2014

(54) Title of the invention : STEEL SHEET FOR VESSEL HAVING EXCELLENT CORROSION RESISTANCE

(51) International classification :C23C28/00,C23C22/07,C23C22/24
(31) Priority Document No :2010-070305
(32) Priority Date :25/03/2010
(33) Name of priority country :Japan
(86) International Application No :PCT/JP2011/058156
Filing Date :24/03/2011
(87) International Publication No :WO 2011/118848
(61) Patent of Addition to Application Number :NA
Filing Date :NA
(62) Divisional to Application Number :NA
Filing Date :NA

(71)**Name of Applicant :**
1)NIPPON STEEL CORPORATION
Address of Applicant :6 1 Marunouchi 2 chome Chiyoda ku Tokyo 1008071 Japan
(72)**Name of Inventor :**
1)HIRANO Shigeru
2)KAWABATA Makoto

(57) Abstract :
Disclosed is a steel sheet that is for a vessel and that is provided with: a steel sheet; an Ni plating layer formed from 0.3 3 g/m of deposited Ni and containing Co in the range of 0.1 100 ppm; and a chromate coat layer formed from the deposition of 1 40 mg/m in Cr equivalents formed on the surface of the aforementioned Ni plating layer (or a Zr containing coat layer formed from 1 40 mg/m of deposited Zr on the surface of the Ni plating layer). The steel sheet for a vessel has excellent corrosion resistance adhesion and welding properties.

No. of Pages : 26 No. of Claims : 8

(12) PATENT APPLICATION PUBLICATION
(19) INDIA
(22) Date of filing of Application :25/09/2012
(21) Application No.8363/DELNP/2012 A
(43) Publication Date : 21/03/2014

(54) Title of the invention : COATING COMPOSITION METHOD FOR MANUFACTURING FILM USING THE SAME AND COATED BODY USING THE SAME

(51) International classification	:C09D127/12,B05D7/24,C09D5/00
(31) Priority Document No	:2010-071130
(32) Priority Date	:25/03/2010
(33) Name of priority country	:Japan
(86) International Application No	:PCT/JP2011/057508
Filing Date	:22/03/2011
(87) International Publication No	:WO 2011/118827
(61) Patent of Addition to Application Number	:NA
Filing Date	:NA
(62) Divisional to Application Number	:NA
Filing Date	:NA

(71)**Name of Applicant :**
1)NIPPON FUSSO CO. LTD.
Address of Applicant :2 4 6 Mokuzaidori Mihara ku Sakai shi Osaka 5870042 Japan
2)DU PONT MITSUI FLUOROCHEMICALS CO. LTD.
(72)**Name of Inventor :**
1)FUKUMURA Naoki
2)TAKEYAMA Masahiro
3)NAKAZAWA Ryo

(57) Abstract :
Provided is a primer composition containing chromium free fluororesin which can provide a coated body having excellent high anti corrosiveness by providing a fluororesin film and a primer layer having sufficient adhesive strength together with the fluororesin film to the surface of a base material such as metal glass ceramic and heat resistant plastic. Also provided are a method for manufacturing a film using the primer composition and a coated body using the primer composition. A coating composition is provided which on the basis of ASTM D1238 and fluororesin containing a reactive functional group contains organic titanate and at least one type of fluororesin component selected from fluororesins the melt flow rate (MFR) of which measured at 372°C under a load of 5 kg is 10 to 100 g per 10 minutes and the titanium content of the organic titanate with respect to the fluororesin component is 1 to 40 wt%.

No. of Pages : 43 No. of Claims : 15

(12) PATENT APPLICATION PUBLICATION
(19) INDIA
(22) Date of filing of Application :25/09/2012
(21) Application No.8364/DELNP/2012 A
(43) Publication Date : 21/03/2014

(54) Title of the invention : WORKPIECE TRANSFER APPARATUS VALVE GRINDING MACHINE PROVIDED WITH SAME WORKPIECE TRANSFER METHOD AND VALVE GRINDING METHOD

(51) International classification :B24B41/06,B24B5/35
(31) Priority Document No :2010-070733
(32) Priority Date :25/03/2010
(33) Name of priority country :Japan
(86) International Application No :PCT/JP2011/056862
Filing Date :22/03/2011
(87) International Publication No :WO 2011/118593
(61) Patent of Addition to Application Number :NA
Filing Date :NA
(62) Divisional to Application Number :NA
Filing Date :NA

(71)**Name of Applicant :**
1)HONDA MOTOR CO. LTD.
Address of Applicant :1 1 Minami Aoyama 2 chome Minato ku Tokyo 1078556 Japan
(72)**Name of Inventor :**
1)KONDO Yasuo
2)KAKEHI Takayuki
3)IMAZU Koichi
4)IGA Minoru

(57) Abstract :
A workpiece transfer apparatus (5) for inputting and dispensing an engine valve (V) having an umbrella portion (Vb) into and out of a three jaw hollow chuck (70) having a hollow part (72) and jaws (71) is provided with: a slider (41) which is capable of advancing toward or retreating from the three jaw hollow chuck; a grip section (421) which is provided on the slider in a manner so as to be able to oscillate and which grips the handle side end section (Vc) of the engine valve; and a cam roller (46) and a cam groove (161) which oscillate the position of the grip section in accordance with the advance or retreat of the slider and which can oscillate the position at which the engine valve is gripped by the grip section between a directly facing position facing toward the axial direction and a tilting position which is tilted at a prescribed angle. When the slider advances toward the three jaw hollow chuck the grip section oscillates the engine valve in compliance with the cam groove and the cam roller from the tilting position toward the directly facing position and puts the umbrella portion into the three jaw hollow chuck.

No. of Pages : 51 No. of Claims : 6

(12) PATENT APPLICATION PUBLICATION
(19) INDIA
(22) Date of filing of Application :25/09/2012
(21) Application No.8365/DELNP/2012 A
(43) Publication Date : 21/03/2014

(54) Title of the invention : METHOD AND SYSTEM FOR MANAGING SPECIFIC EVENTS RELATED TO THE MOVEMENTS OF A GUIDED VEHICLE

(51) International classification :B61L27/04,B61L3/12
(31) Priority Document No :10290159.2
(32) Priority Date :26/03/2010
(33) Name of priority country :EPO
(86) International Application No :PCT/EP2010/055740
Filing Date :28/04/2010
(87) International Publication No :WO 2011/116837
(61) Patent of Addition to Application Number :NA
Filing Date :NA
(62) Divisional to Application Number :NA
Filing Date :NA

(71)**Name of Applicant :**
1)SIEMENS SAS
Address of Applicant :9 Boulevard Finot F 93200 St. Denis France
(72)**Name of Inventor :**
1)NOGUEIRA ALVES Clara
2)EL FASSI Sa¯d

(57) Abstract :
The present invention relates to a method and system for managing a specific event (1) related to the movement of a guided vehicle (3) wherein said system for managing a specific event (1) includes a remote control module (2) and a remote control station (4) for remotely controlling said guided vehicle (3) upon a command to the remote control module (2) from the remote control station (4) to switch from a normal driving mode to a remote driving mode.

No. of Pages : 39 No. of Claims : 16

(12) PATENT APPLICATION PUBLICATION
(19) INDIA
(22) Date of filing of Application :25/09/2012
(21) Application No.8373/DELNP/2012 A
(43) Publication Date : 21/03/2014

(54) Title of the invention : SATELLITE ADDRESSING CONCEPT

(51) International classification :B42D15/00,B42D15/10
(31) Priority Document No :2010901701
(32) Priority Date :22/04/2010
(33) Name of priority country :Australia
(86) International Application No :PCT/AU2010/001338
Filing Date :11/10/2010
(87) International Publication No :WO 2011/130774
(61) Patent of Addition to Application Number :NA
Filing Date :NA
(62) Divisional to Application Number :NA
Filing Date :NA

(71)**Name of Applicant :**
1)RASTEGAR Gholam Hossein
Address of Applicant :43 Andalusian Retreat Brigadoon Western Australia 6069 Australia
(72)**Name of Inventor :**
1)RASTEGAR Gholam Hossein

(57) Abstract :
A method of using latitude and longitude coordinates of a point as a means to specify a unique and unmistakable destination address. These coordinates are not affected by changes in street numbering changes in street names and these coordinates are never out dated nor do they require updating or upgrading. Some examples of where the latitude and longitude coordinates can be displayed are on items such as business cards letterheads directories advertisements billboards and websites.

No. of Pages : 5 No. of Claims : 10

(12) PATENT APPLICATION PUBLICATION
(19) INDIA
(22) Date of filing of Application :25/09/2012
(21) Application No.8374/DELNP/2012 A
(43) Publication Date : 21/03/2014

(54) Title of the invention : DELIVERY OF INFORMATION SERVICES TO PERSONAL DEVICES

(51) International classification :G06K19/07,G07F7/10,G06Q20/00
(31) Priority Document No :61/316,613
(32) Priority Date :23/03/2010
(33) Name of priority country :U.S.A.
(86) International Application No :PCT/GB2011/050568
Filing Date :22/03/2011
(87) International Publication No :WO 2011/117624
(61) Patent of Addition to Application Number :NA
Filing Date :NA
(62) Divisional to Application Number :NA
Filing Date :NA

(71)**Name of Applicant :**
1)MASTERCARD INTERNATIONAL INCORPORATED
Address of Applicant :2000 Purchase Street Purchase New York 10577 U.S.A.
(72)**Name of Inventor :**
1)POCHIC Sebastien
2)MAIDMENT Barry Alan
3)COLLINGE Mehdi
4)ATES Fikret

(57) Abstract :
A transaction processing system for sending user information data to a personal device and an associated method are provided. The system comprises: a personal device such as a balance display card; an interface device such as a card reader for transmitting data to and from the card; a communications network connecting to the interface device; an issuer processor connected to the communications network; and a trusted network processor (TNP) processor connected to the communications network interposed between the interface device and the issuer processor. The TNP processor is arranged to receive a transaction request message from a card user and to transmit a response message back to the personal device the response message typically being a transaction authorization together with information for display on the card. The TNP processor is arranged to identify dependent on properties of the transaction request message whether the associated response message will require data to be sent to the user information device and if so identified to: route the transaction request message to the issuer processor using a standard message; receive the required data from the issuer processor using another standard message; match the received required data to the original request; generate an appropriate response message and script containing the required data; and transmit the response message back to the personal device thereby making the required information known to the user.

No. of Pages : 52 No. of Claims : 15

(12) PATENT APPLICATION PUBLICATION
(19) INDIA
(22) Date of filing of Application :25/09/2012
(21) Application No.8375/DELNP/2012 A
(43) Publication Date : 21/03/2014

(54) Title of the invention : PUMPING COARSE ORE

(51) International classification :E21C47/00,B65G51/00,B65G53/00
(31) Priority Document No :2010901250
(32) Priority Date :24/03/2010
(33) Name of priority country :Australia
(86) International Application No :PCT/AU2011/000336
Filing Date :24/03/2011
(87) International Publication No :WO 2011/116424
(61) Patent of Addition to Application Number :NA
Filing Date :NA
(62) Divisional to Application Number :NA
Filing Date :NA

(71)**Name of Applicant :**
1)TECHNOLOGICAL RESOURCES PTY. LIMITED
Address of Applicant :120 Collins Street Melbourne Victoria 3000 Australia
(72)**Name of Inventor :**
1)PAINTER Carly Louise

(57) Abstract :
A method and an apparatus for pumping a mined material in the form of a coarse ore is disclosed. The method comprises suspending particles of the coarse ore in a non Newtonian fluid and thereby forming a slurry of the coarse ore particles in the fluid. The method also comprises transferring the slurry for example by pumping the slurry in a pipeline.

No. of Pages : 26 No. of Claims : 31

(12) PATENT APPLICATION PUBLICATION
(19) INDIA
(22) Date of filing of Application :25/09/2012
(21) Application No.8376/DELNP/2012 A
(43) Publication Date : 21/03/2014

(54) Title of the invention : METHOD OF MANUFACTURING VEHICLE WINDOW PANE MEMBER

(51) International classification :B60J1/00,B32B17/10,B32B37/24
(31) Priority Document No :2010-070103
(32) Priority Date :25/03/2010
(33) Name of priority country :Japan
(86) International Application No :PCT/JP2011/056315
Filing Date :16/03/2011
(87) International Publication No :WO 2011/118478
(61) Patent of Addition to Application Number :NA
Filing Date :NA
(62) Divisional to Application Number :NA
Filing Date :NA

(71)**Name of Applicant :**
1)Asahi Glass Company Limited.
Address of Applicant :5 1 Marunouchi 1 chome Chiyoda ku Tokyo 1008405 Japan
(72)**Name of Inventor :**
1)NIIYAMA Satoshi
2)ITO Hiroshige
3)TSUSHIMA Hitoshi

(57) Abstract :
Disclosed is a method of manufacturing a vehicle window pane member which has a curved glass plate; a curved resin plate which is disposed on the concave surface side of the curved glass plate and is curved along the shape of the curved glass plate; a resin layer which is held between the curved glass plate and the curved resin plate; and a sealing section which surrounds the periphery of the resin layer. This method of manufacturing a vehicle window pane member comprises the following processes (a1 b1 c1 d1): (a1) a process wherein a liquid curable resin composition for forming the sealing section is applied to the peripheral section of the concave surface of the curved glass plate resulting in an uncured sealing section being formed; (b1) a process wherein a liquid curable resin composition for forming the resin layer is supplied to the area surrounded by the uncured sealing section; (c1) a process wherein in an atmosphere at a reduced pressure of 100 Pa or less the curved resin plate is placed on top of the curable resin composition for forming the resin layer so that the convex surface will be positioned on the side of the curable resin composition for forming the resin layer with the result that there is obtained a laminated product such that the unhardened resin layer consisting of the curable resin composition for forming the resin layer is sealed by the curved glass plate the curved resin plate and the uncured sealing section; and (d1) a process wherein the uncured sealing section and the uncured resin layer are cured with the laminated product placed in an atmosphere at a pressure of 50 kPa or more.

No. of Pages : 50 No. of Claims : 2

(12) PATENT APPLICATION PUBLICATION
(19) INDIA
(22) Date of filing of Application :21/09/2012
(21) Application No.8252/DELNP/2012 A
(43) Publication Date : 21/03/2014

(54) Title of the invention : BASE STATION COMMUNICATION SYSTEM AND COMMUNICATION METHOD

(51) International classification	:H04W36/18,H04B7/04,H04J99/00
(31) Priority Document No	:2010082049
(32) Priority Date	:31/03/2010
(33) Name of priority country	:Japan
(86) International Application No	:PCT/JP2011/053713
Filing Date	:21/02/2011
(87) International Publication No	:WO 2011/122167
(61) Patent of Addition to Application Number	:NA
Filing Date	:NA
(62) Divisional to Application Number	:NA
Filing Date	:NA

(71)**Name of Applicant :**
1)SONY CORPORATION
Address of Applicant :1 7 1 Konan Minato ku Tokyo 1080075 Japan
(72)**Name of Inventor :**
1)TAKANO Hiroaki

(57) Abstract :
This invention provides a base station a communication system and a communication method. A base station comprises: a plurality of branches for performing CoMP transmissions together with other base stations; and a multiplying unit for multiplying the transport signal which is to be transmitted from each of the plurality of branches by the calibration factor of that branch. The calibration factors are obtained by adjusting based on the results of branch calibrations between the branches of the base station and the branches of the other base stations the individual calibration factors acquired by the branch calibrations among the plurality of branches in the base station.

No. of Pages : 49 No. of Claims : 8

(12) PATENT APPLICATION PUBLICATION
(19) INDIA
(22) Date of filing of Application :21/09/2012
(21) Application No.8253/DELNP/2012 A
(43) Publication Date : 21/03/2014

(54) Title of the invention : COMMUNICATION CONTROL METHOD COMMUNICATION SYSTEM AND MANAGEMENT SERVER

(51) International classification	:H04W16/28,H04B7/02,H04W16/08
(31) Priority Document No	:2010075335
(32) Priority Date	:29/03/2010
(33) Name of priority country	:Japan
(86) International Application No	:PCT/JP2011/053712
Filing Date	:21/02/2011
(87) International Publication No	:WO 2011/122166
(61) Patent of Addition to Application Number	:NA
Filing Date	:NA
(62) Divisional to Application Number	:NA
Filing Date	:NA

(71)**Name of Applicant :**
1)SONY CORPORATION
Address of Applicant :1 7 1 Konan Minato ku Tokyo 1080075 Japan
(72)**Name of Inventor :**
1)SAWAI Ryo

(57) Abstract :
Disclosed are a communication control method a communication system and a management server. Said communication system comprises a first transmission device a first reception device and a second transmission device and second reception device that make secondary use of a frequency allocated to the first transmission device. The disclosed communication control method includes a step in which it is determined whether or not the reception quality at the second reception device meets a given criterion and a step in which if it has been determined that the reception quality at the second reception device does not meet the given criterion the following are successively executed in a prescribed order: reception beam steering by the first reception device; beam steering by the first transmission device; reception beam steering by the second reception device; and transmission beam steering by the second transmission device.

No. of Pages : 37 No. of Claims : 10

(12) PATENT APPLICATION PUBLICATION
(19) INDIA
(22) Date of filing of Application :21/09/2012
(21) Application No.8254/DELNP/2012 A
(43) Publication Date : 21/03/2014

(54) Title of the invention : PSEUDO NOISE GENERATOR

(51) International classification :G06F7/58
(31) Priority Document No :10275029.6
(32) Priority Date :22/03/2010
(33) Name of priority country :EPO
(86) International Application No :PCT/EP2011/054262
Filing Date :21/03/2011
(87) International Publication No :WO 2011/117197
(61) Patent of Addition to Application Number :NA
Filing Date :NA
(62) Divisional to Application Number :NA
Filing Date :NA

(71)**Name of Applicant :**
1)ASTRIUM LIMITED
Address of Applicant :Gunnels Wood Road Stevenage Hertfordshire SG1 2AS U.K.
(72)**Name of Inventor :**
1)FARRUGIA Lewis

(57) Abstract :
The present invention relates to a pseudo noise generator comprising a plurality of pseudo random number generators and an averaging unit. The averaging unit is arranged to receive a plurality of pseudo random numbers from the plurality of pseudo random number generators calculate a mean value of the plurality of pseudo random numbers and output said mean value as a digital pseudo noise signal.

No. of Pages : 28 No. of Claims : 14

(12) PATENT APPLICATION PUBLICATION
(19) INDIA
(22) Date of filing of Application :21/09/2012
(21) Application No.8255/DELNP/2012 A
(43) Publication Date : 21/03/2014

(54) Title of the invention : BASE STATION COMMUNICATION SYSTEM AND COMMUNICATION METHOD

(51) International classification :H04W16/28,H04B7/04,H04W92/20
(31) Priority Document No :2010082050
(32) Priority Date :31/03/2010
(33) Name of priority country :Japan
(86) International Application No :PCT/JP2011/051306
Filing Date :25/01/2011
(87) International Publication No :WO 2011/122083
(61) Patent of Addition to Application Number :NA
Filing Date :NA
(62) Divisional to Application Number :NA
Filing Date :NA

(71)**Name of Applicant :**
1)SONY CORPORATION
Address of Applicant :1 7 1 Konan Minato ku Tokyo 1080075 Japan
(72)**Name of Inventor :**
1)TAKANO Hiroaki

(57) Abstract :
This invention provides a base station a communication system and a communication method. A base station comprises: a plurality of branches; a storing unit that stores the calibration factor of each of the plurality of branches for each of a plurality of combinations with respective other base stations; and a multiplying unit that when CoMP transmissions are performed from the plurality of branches together with one or more of the other base stations multiplies the transport signal which is to be transmitted from each of the plurality of branches by the calibration factor corresponding to the combination with the one or more other base stations.

No. of Pages : 37 No. of Claims : 5

(12) PATENT APPLICATION PUBLICATION
(19) INDIA
(22) Date of filing of Application :21/09/2012
(21) Application No.8256/DELNP/2012 A
(43) Publication Date : 21/03/2014

(54) Title of the invention : MIXING OR DISPERSING ELEMENT AND PROCESS FOR STATIC MIXING OR DISPERSING

(51) International classification :B01F5/06
(31) Priority Document No :10157132.1
(32) Priority Date :22/03/2010
(33) Name of priority country :EPO
(86) International Application No :PCT/EP2010/065146
Filing Date :08/10/2010
(87) International Publication No :WO 2011/116840
(61) Patent of Addition to Application Number :NA
Filing Date :NA
(62) Divisional to Application Number :NA
Filing Date :NA

(71)**Name of Applicant :**
1)SULZER CHEMTECH AG
Address of Applicant :Sulzer Allee 48 CH 8404 Winterthur Switzerland
(72)**Name of Inventor :**
1)HIRSCHBERG Sebastian
2)SUHNER Marcel

(57) Abstract :
A mixing or dispersing element (1 10 30 40 50 60 70) comprises a channel (2) in which an insert element (3 4 33 34) comprising a foam structure is disposed. A static mixing element (5 6 35 36) for macromixing or predispersion or macrodispersion is disposed in the channel (2) in addition to the insert element (3 4 33 34) for micromixing or dispersing. In addition a process for obtaining a dispersion with such a mixing or dispersing element is described.

No. of Pages : 28 No. of Claims : 15

(12) PATENT APPLICATION PUBLICATION
(19) INDIA
(22) Date of filing of Application :25/09/2012
(21) Application No.8386/DELNP/2012 A
(43) Publication Date : 21/03/2014

(54) Title of the invention : DOSAGE REGIMEN OF DIARYL SULFIDE DERIVATIVES

(51) International classification :A61K31/145,A61P37/08
(31) Priority Document No :10162082.1
(32) Priority Date :06/05/2010
(33) Name of priority country :EPO
(86) International Application No :PCT/EP2011/057210
Filing Date :05/05/2011
(87) International Publication No :WO 2011/138398
(61) Patent of Addition to Application Number :NA
Filing Date :NA
(62) Divisional to Application Number :NA
Filing Date :NA

(71)**Name of Applicant :**
1)NOVARTIS AG
Address of Applicant :Lichtstrasse 35 CH 4056 Basel Switzerland
(72)**Name of Inventor :**
1)GERGELY Peter
2)LEGANGNEUX Eric
3)WALLSTROEM Erik

(57) Abstract :
A compound of formula (I) wherein X is O S SO or SO; R is halogen trihalomethyl
OH Calkyl Calkoxy trifluoromethoxy phenoxy cyclohexylmethyloxy pyridylmethoxy cinnamyloxy naphthylmethoxy phenoxymethyl CH OH CH CH OH Calkylthio Calkylsulfinyl Calkylsulfonyl benzylthio acetyl nitro or cyano or phenyl phenylCalkyl or phenyl Calkoxy each phenyl group thereof being optionally substituted by halogen CF Calkyl or Calkoxy; R is
H halogen trihalomethyl Calkoxy Calkyl phenethyl or benzyloxy; R H halogen CF OH Calkyl Calkoxy benzyloxy phenyl or Calkoxymethyl; each of R and R independently is H or a residue of formula (a) wherein each of R and R independently is H or Calkyl optionally substituted by halogen; and n is an integer from 1 to 4; or a pharmaceutically acceptable salt hydrate solvate isomer or prodrug thereof; or a compound of formula (II) wherein R is halogen trihalomethyl Calkyl Calkoxy Calkylthio Calkylsulifinyl Calkyl sulfonyl aralkyl optionally substituted phenoxy or aralkyloxy; R is H halogen trihalomethyl Calkyl Calkoxy aralkyl or aralkyloxy; R is H halogen CF Calkyl Calkoxy Calkylthio or benzyloxy; R is H Calkyl phenyl optionally substituted benzyl or benzoyl or lower aliphatic Cacyl; R is H monohalomethyl Calkyl Calkoxy methyl Calkyl
thiomethyl hydroxyethyl hydroxypropyl phenyl aralkyl Calkenyl or alkynyl; R is H or Calkyl; R is H C1alkyl or a residue of formula (a) as defined above X is O S SO or SO; and n is an integer of 1 to 4; or a pharmaceutically acceptable salt hydrate solvate isomer or prodrug thereof for use in a method of treatment optionally of an autoimmune condition wherein said compound of formula (I) or (II) is administered at a dosage lower than the standard daily dosage of said compound during the initial period of treatment and then is increased optionally stepwise up to the standard daily dosage of said compound.

No. of Pages : 32 No. of Claims : 10

(12) PATENT APPLICATION PUBLICATION
(19) INDIA
(22) Date of filing of Application :25/09/2012
(21) Application No.8388/DELNP/2012 A
(43) Publication Date : 21/03/2014

(54) Title of the invention : COMPOSITION FOR THE PROPHYLAXIS OF CANDIDIASIS

(51) International classification :A61K8/34,A61K8/97,A61K8/92
(31) Priority Document No :201001053
(32) Priority Date :08/07/2010
(33) Name of priority country :EAPO
(86) International Application No :PCT/RU2011/000407
Filing Date :09/06/2011
(87) International Publication No:WO 2012/005622
(61) Patent of Addition to Application Number :NA
Filing Date :NA
(62) Divisional to Application Number :NA
Filing Date :NA

(71)**Name of Applicant :**
1)OBSHCHESTVO S OGRANICHENNOJ OTVETSTVENNOSTYU WDS
Address of Applicant :ul. Kulakova 20 1G Moscow 123592 Russia
(72)**Name of Inventor :**
1)MANASHEROV Tamaz Omarovich
2)MATELO Svetlana Konstantinovna
3)KUPETS Tatyana Vladimirovna

(57) Abstract :
The invention solves the problem of the practical realization of an effective prophylactic composition which uses available and safe components and which can be recommended for preventing the growth of candidiasis of the skin and/or mucous membranes in humans in the following risk group: sufferers of diabetes mellitus people with blood diseases immune deficiency and other serious pathologies patients after a course of hormone therapy antibiotic treatment or chemotherapy as well as for babies and pregnant women; and for people using tooth implants. The composition for the prophylaxis of candidiasis comprises active components with the active components used being xylitol in a quantity of 0.3 20.0 % by mass and sodium or potassium alginate or a mixture thereof in a quantity of 0.01 2.0 % by mass as well as inert components.

No. of Pages : 17 No. of Claims : 16

(12) PATENT APPLICATION PUBLICATION
(19) INDIA
(22) Date of filing of Application :25/09/2012
(21) Application No.8389/DELNP/2012 A
(43) Publication Date : 21/03/2014

(54) Title of the invention : FIELD EMISSION CATHODE

(51) International classification :H01J1/304,H01J31/12,H01J63/02
(31) Priority Document No :10159139.4
(32) Priority Date :06/04/2010
(33) Name of priority country :EPO
(86) International Application No :PCT/EP2011/055213
Filing Date :04/04/2011
(87) International Publication No :WO 2011/124555
(61) Patent of Addition to Application Number :NA
Filing Date :NA
(62) Divisional to Application Number :NA
Filing Date :NA

(71)**Name of Applicant :**
1)LIGHTLAB SWEDEN AB
Address of Applicant :–stermalmstorg 1 S 114 42 Stockholm Sweden
(72)**Name of Inventor :**
1)HU Qiu Hong

(57) Abstract :
The present invention relates to afield emission cathode comprising an at least partly electrically conductive base structure and a plurality of electrically conductive micrometer sized sections spatially distributed at the base structure wherein at least a portion of the plurality of micrometer sized sections each are provided with a plurality of electrically conductive nanostructures. Advantages of the invention include lower power consumption as well as an increase in light output of e.g. a field emission lighting arrangement comprising the field emission cathode.

No. of Pages : 18 No. of Claims : 15

(12) PATENT APPLICATION PUBLICATION
(19) INDIA
(22) Date of filing of Application :26/09/2012
(21) Application No.8413/DELNP/2012 A
(43) Publication Date : 21/03/2014

(54) Title of the invention : CERAMIC LINED CHANNEL INDUCTOR

(51) International classification :F27B1/00,F27D1/10
(31) Priority Document No :2010901328
(32) Priority Date :29/03/2010
(33) Name of priority country :Australia
(86) International Application No :PCT/AU2011/000351
Filing Date :29/03/2011
(87) International Publication No :WO 2011/120079
(61) Patent of Addition to Application Number :NA
Filing Date :NA
(62) Divisional to Application Number :NA
Filing Date :NA

(71)**Name of Applicant :**
1)BLUESCOPE STEEL LIMITED
Address of Applicant :Level 11120 Collins Street Melbourne Victoria 3000 Australia
(72)**Name of Inventor :**
1)THOMPSON Darren Kenneth
2)SETARGEW Nega
3)GLEESON William Joseph
4)CARDOZO Gerry
5)SPINK John Anthony
6)ROULSTON Craig

(57) Abstract :
A channel inductor of a channel induction furnace is disclosed. The channel inductor comprises a channel liner that defines a channel for a molten metal to flow through the channel inductor. The channel liner comprises an inlet and an outlet for the molten metal and a flange for mounting the channel liner to a refractory material lining of a pot of the channel inductor furnace. The channel liner being formed from a ceramic material that is resistant to chemical attack by the molten metal in the channel whereby in use of the channel induction furnace direct contact between the molten metal and the channel inductor is limited to contact with the channel liner (including the flange) only and molten metal does not contact other parts of the channel inductor.

No. of Pages : 16 No. of Claims : 8

(12) PATENT APPLICATION PUBLICATION
(19) INDIA
(22) Date of filing of Application :26/09/2012
(21) Application No.8414/DELNP/2012 A
(43) Publication Date : 21/03/2014

(54) Title of the invention : A MIRROR HAVING REFLECTIVE COATINGS ON A FIRST SURFACE AND AN OPPOSITE SECOND SURFACE

(51) International classification :C03C17/23,C03C17/34,C03C17/36
(31) Priority Document No :61/319,601
(32) Priority Date :31/03/2010
(33) Name of priority country :U.S.A.
(86) International Application No :PCT/US2011/030243
Filing Date :29/03/2011
(87) International Publication No :WO 2011/123405
(61) Patent of Addition to Application Number :NA
Filing Date :NA
(62) Divisional to Application Number :NA
Filing Date :NA

(71)**Name of Applicant :**
1)PPG INDUSTRIES OHIO INC.
Address of Applicant :3800 West 143rd Street Cleveland Ohio 44111 U.S.A.
(72)**Name of Inventor :**
1)HASKINS David R.
2)ARBAB Mehran
3)WAGNER Andrew V.

(57) Abstract :
A solar mirror includes an opaque reflective coating on a surface of a transparent substrate facing away from the sun and a transparent reflective coating on the opposite surface of the substrate. The transparent reflective coating increases the percent reflection of wavelengths in selected ranges e.g. wavelengths in the infrared range to increase the total solar energy reflected by the solar mirror to increase the solar energy directed to a receiver that converts solar energy to electric and/or thermal energy.

No. of Pages : 31 No. of Claims : 21

(12) PATENT APPLICATION PUBLICATION
(19) INDIA
(22) Date of filing of Application :26/09/2012
(21) Application No.8415/DELNP/2012 A
(43) Publication Date : 21/03/2014

(54) Title of the invention : CROSS SPECIES SPECIFIC PSMAXCD3 BISPECIFIC SINGLE CHAIN ANTIBODY

(51) International classification :C07K16/28,C07K16/30,C07K16/40
(31) Priority Document No :61/320,052
(32) Priority Date :01/04/2010
(33) Name of priority country:U.S.A.
(86) International Application No :PCT/EP2011/055104
Filing Date :01/04/2011
(87) International Publication No :WO 2011/121110
(61) Patent of Addition to Application Number :NA
Filing Date :NA
(62) Divisional to Application Number :NA
Filing Date :NA

(71)**Name of Applicant :**
1)AMGEN RESEARCH (MUNICH) GMBH
Address of Applicant :Staffelseestrasse 2 81477 Munich Germany
(72)**Name of Inventor :**
1)KUFER Peter
2)RAUM Tobias
3)KISCHEL Roman
4)LUTTERBUESE Ralf
5)HOFFMANN Patrick
6)RAU Doris
7)MANGOLD Susanne
8)KLINGER Matthias
9)SCHALLER Evelyne
10)HAUSMANN Susanne
11)FLUHR Petra
12)STEIGER Carola

(57) Abstract :
The present invention relates to a bispecific single chain antibody molecule comprising a first binding domain capable of binding to an epitope of human and non chimpanzee primate CD3 epsilon chain wherein the epitope is part of an amino acid sequence comprised in the group consisting of SEQ ID NOs. 2 4 6 and 8 and a second binding domain capable of binding to prostate specific membrane antigen (PSMA). The invention also provides nucleic acids encoding said bispecific single chain antibody molecule as well as vectors and host cells and a process for its production. The invention further relates to pharmaceutical compositions comprising said bispecific single chain antibody molecule and medical uses of said bispecific single chain antibody molecule.

No. of Pages : 197 No. of Claims : 36

(12) PATENT APPLICATION PUBLICATION
(19) INDIA
(22) Date of filing of Application :26/09/2012
(21) Application No.8416/DELNP/2012 A
(43) Publication Date : 21/03/2014

(54) Title of the invention : A CENTRIFUGAL COMPRESSOR

(51) International classification :F01D15/08,F04D17/10,F01D1/22
(31) Priority Document No :2010901115
(32) Priority Date :17/03/2010
(33) Name of priority country :Australia
(86) International Application No :PCT/AU2011/000294
Filing Date :17/03/2011
(87) International Publication No :WO 2011/113098
(61) Patent of Addition to Application Number :NA
Filing Date :NA
(62) Divisional to Application Number :NA
Filing Date :NA

(71)**Name of Applicant :**
1)INNOVATIVE DESIGN TECHNOLOGY PTY LIMITED
Address of Applicant :19 Speedwell Street Sommerville Victoria 3925 Australia
(72)**Name of Inventor :**
1)DAVEY Garth

(57) Abstract :
A centrifugal compressor comprising an impeller having an input drive the impeller having an impulse turbine positioned around the periphery of the impeller to be driven by the gas exiting the impeller the output of the turbine being coupled to the drive of the impeller.

No. of Pages : 28 No. of Claims : 10

(12) PATENT APPLICATION PUBLICATION
(19) INDIA
(22) Date of filing of Application :26/09/2012
(21) Application No.8417/DELNP/2012 A
(43) Publication Date : 21/03/2014

(54) Title of the invention : PRODUCTION OF PROTEINS AND POLYPEPTIDES

(51) International classification :C12N15/62,C07K1/16,C12P21/00
(31) Priority Document No :10156927.5
(32) Priority Date :18/03/2010
(33) Name of priority country :EPO
(86) International Application No :PCT/SE2010/051163
Filing Date :27/10/2010
(87) International Publication No :WO 2011/115538
(61) Patent of Addition to Application Number :NA
Filing Date :NA
(62) Divisional to Application Number :NA
Filing Date :NA

(71)**Name of Applicant :**
1)SPIBER TECHNOLOGIES AB
Address of Applicant :C/o Rising Doppingvgen 12 S 756 51 Uppsala Sweden
(72)**Name of Inventor :**
1)JOHANSSON Jan
2)RISING Anna
3)HEDHAMMAR My
4)NORDLING Kerstin

(57) Abstract :
A method of producing a desired non spidroin protein or polypeptide is comprising the steps of expressing in a suitable host a fusion protein obtaining a mixture containing the fusion protein and optionally isolating the fusion protein. The fusion protein is comprising at least one solubility enhancing moiety which is derived from the N terminal (NT) fragment of a spider silk protein. It is further comprising at least one moiety which is a desired non spidroin protein or polypeptide. Each solubility enhancing moiety is linked directly or indirectly to the desired protein or polypeptide moiety.

No. of Pages : 138 No. of Claims : 30

(12) PATENT APPLICATION PUBLICATION
(19) INDIA
(22) Date of filing of Application :28/09/2012
(21) Application No.8510/DELNP/2012 A
(43) Publication Date : 21/03/2014

(54) Title of the invention : APPARATUS AND METHODS FOR BONE REPAIR

(51) International classification :A61B17/68
(31) Priority Document No :61/311,494
(32) Priority Date :08/03/2010
(33) Name of priority country :U.S.A.
(86) International Application No :PCT/US2011/027602
Filing Date :08/03/2011
(87) International Publication No :WO 2011/112619
(61) Patent of Addition to Application Number :NA
Filing Date :NA
(62) Divisional to Application Number :NA
Filing Date :NA

(71)**Name of Applicant :**
1)CONVENTUS ORTHOPAEDICS INC.
Address of Applicant :10200 73rd Ave N. Eagle Lake Office Suite #122 Maple Grove Minnesota 55369 U.S.A.
(72)**Name of Inventor :**
1)KRINKE Todd A.
2)KRUSE Steve D.
3)TAYLOR Kyle
4)HERTEL Stefan J.
5)BRENZEL Michael P.
6)HINDRICHS Paul

(57) Abstract :
Apparatus and methods for repairing a bone. The apparatus and methods may involve transferring a mechanical load from a first bone fragment to a second bone fragment. For example the first bone fragment may be at the end of the bone. The second bone fragment may be in the diaphyseal region of the bone. The bone fragment at the end of the bone may be separated by a fracture from the bone fragment in the diaphyseal region of the bone. The fracture may interfere with transmission of the load from the bone fragment at the end of the bone to the bone fragment in the diaphyseal region of the bone. Transmission of the load across the fracture by the apparatus may promote healing of the fracture.

No. of Pages : 97 No. of Claims : 63

(12) PATENT APPLICATION PUBLICATION
(19) INDIA
(22) Date of filing of Application :28/09/2012
(21) Application No.8512/DELNP/2012 A
(43) Publication Date : 21/03/2014

(54) Title of the invention : APPARATUS AND METHODS FOR SECURING A BONE IMPLANT

(51) International classification :A61B17/68
(31) Priority Document No :61/311,494
(32) Priority Date :08/03/2010
(33) Name of priority country :U.S.A.
(86) International Application No :PCT/US2011/027597
Filing Date :08/03/2011
(87) International Publication No :WO 2011/112615
(61) Patent of Addition to Application Number :NA
Filing Date :NA
(62) Divisional to Application Number :NA
Filing Date :NA

(71)**Name of Applicant :**
1)CONVENTUS ORTHOPAEDICS INC.
Address of Applicant :10200 73rd Ave N. Eagle Lake Office Suite #122 Maple Grove MN 55369 U.S.A.
(72)**Name of Inventor :**
1)KRINKE Todd A.
2)KRUSE Steve D.
3)TAYLOR Kyle
4)HERTEL Stefan J.
5)BRENZEL Michael P.
6)HINDRICHS Paul
7)PETERSON Alex A.

(57) Abstract :
Apparatus and methods for securing a bone implant are provided. The implant may be an expandable implant. The implant may be a non expandable implant. The implant may be for repairing a bone fracture. The implant may be secured to a bone by anchors. The implant may include anchor receiving features. The anchor receiving features may be configured to direct an anchor into cortical bone. The anchor receiving features may be configured to receive an anchor driven through cortical bone. The implant may include bone engaging members configured to engage cancellous bone. An implant may include different profiles. The different profiles may be configured to secure the implant. The profiles may be configured to support the bone. The implant may have different flexing properties configured to position the implant in the bone. The implant may be positioned to receive an anchor driven through an outside of the bone.

No. of Pages : 156 No. of Claims : 162

(12) PATENT APPLICATION PUBLICATION
(19) INDIA
(22) Date of filing of Application :28/09/2012
(21) Application No.8513/DELNP/2012 A
(43) Publication Date : 21/03/2014

(54) Title of the invention : STOPPERS USED IN PRE FILLED SYRINGES

(51) International classification :A61M5/315
(31) Priority Document No :12/754,101
(32) Priority Date :05/04/2010
(33) Name of priority country :U.S.A.
(86) International Application No :PCT/US2011/029933
Filing Date :25/03/2011
(87) International Publication No :WO 2011/126764
(61) Patent of Addition to Application Number :NA
Filing Date :NA
(62) Divisional to Application Number :NA
Filing Date :NA

(71)**Name of Applicant :**
1)BECTON DICKINSON AND COMPANY
Address of Applicant :1 Becton Drive Franklin Lakes New Jersey 07417 U.S.A.
(72)**Name of Inventor :**
1)QUINN Michael Vincent
2)SCHILLER Eric
3)JU Gang
4)GUAN E

(57) Abstract :
A stopper (12) adapted for attachment with a plunger rod for use within a syringe barrel is disclosed. The stopper includes a main body (26) defining an open rearward end and a closed front end (30). The open rearward end is adapted to receive a front forward end attachment portion of the plunger rod. The stopper (12) also includes a core member (32) integrally formed with the main body (26) adjacent the closed front end (30). The core member (32) includes a nose portion (34) having a conical tip configured for entering an outlet opening of the syringe barrel. The closed front end of the stopper has a profile configured to cooperate with an internal surface of the syringe barrel wall to prevent reflux and reduce dead space within the barrel.

No. of Pages : 82 No. of Claims : 24

(12) PATENT APPLICATION PUBLICATION
(19) INDIA
(22) Date of filing of Application :28/09/2012
(21) Application No.8514/DELNP/2012 A
(43) Publication Date : 21/03/2014

(54) Title of the invention : A MEMORY CARD

(51) International classification :G06K19/06,G06F13/10,H04L12/18
(31) Priority Document No :NA
(32) Priority Date :NA
(33) Name of priority country :NA
(86) International Application No :PCT/SG2010/000069
Filing Date :01/03/2010
(87) International Publication No :WO 2011/108989
(61) Patent of Addition to Application Number :NA
Filing Date :NA
(62) Divisional to Application Number :NA
Filing Date :NA

(71)**Name of Applicant :**
1)T DATA SYSTEMS (S) PTE LTD
Address of Applicant :1 Palm Drive Singapore 456458 Singapore
(72)**Name of Inventor :**
1)TAN Joon Yong Wayne

(57) Abstract :
A memory card (103) for use in an electronic apparatus (101) is proposed. In order to control an electronic apparatus (101) with an inbuilt processor (301) incapable of exporting digital data externally of the electronic apparatus (101) a user local at the electronic apparatus (101) is required to operate the electronic apparatus (101). This is not always convenient. The proposed memory card (103) has a wireless module (207) for receiving an instruction wirelessly from a remote wireless enabled apparatus (105) and also a central processor (201) for controlling the inbuilt processor (301) of the electronic apparatus (101) in accordance with the received instruction.

No. of Pages : 22 No. of Claims : 28

(12) PATENT APPLICATION PUBLICATION
(19) INDIA
(22) Date of filing of Application :25/09/2012
(21) Application No.8377/DELNP/2012 A
(43) Publication Date : 21/03/2014

(54) Title of the invention : CONTROLLED AERATION OF INTEGRATED FIXED FILM ACTIVATED SLUDGE BIOREACTOR SYSTEMS FOR THE TREATMENT OF WASTEWATER

(51) International classification :C02F3/00,C02F3/08,C02F3/30
(31) Priority Document No :12/783807
(32) Priority Date :20/05/2010
(33) Name of priority country :U.S.A.
(86) International Application No :PCT/US2011/036594
Filing Date :16/05/2011
(87) International Publication No :WO 2011/146361
(61) Patent of Addition to Application Number :NA
Filing Date :NA
(62) Divisional to Application Number :NA
Filing Date :NA

(71)**Name of Applicant :**
1)VEOLIA WATER SYSTEMS & TECHNOLOGIES SUPPORT
Address of Applicant :Immeuble LAquarene 1 place Montgolfier F 94410 Saint Maurice France
(72)**Name of Inventor :**
1)DIMASSIMO Richard W.
2)BUNDGAARD Erik

(57) Abstract :
A method of biologically treating wastewater with an integrated fixed film activated sludge process. The integrated fixed film activated sludge process includes biomass suspended in mixed liquor and biomass disposed on carriers. Under certain conditions the dissolved oxygen concentration in a reactor that includes the mixed liquor biomass suspended in the mixed liquor and the biomass on the carriers biological treatment is performed primarily by the biomass in the mixed liquor. This is achieved by controlling or maintaining the dissolved oxygen concentration in the reactor at a relatively low concentration. When the biomass suspended in the mixed liquor is unable to adequately biologically treat the mixed liquor the dissolved oxygen concentration in the reactor is controlled or maintained at a relatively high concentration. This enables biomass on the carriers to contribute more to the biological treatment of the mixed liquor than when the dissolved oxygen concentration was maintained relatively low.

No. of Pages : 32 No. of Claims : 27

(12) PATENT APPLICATION PUBLICATION
(19) INDIA
(22) Date of filing of Application :25/09/2012
(21) Application No.8378/DELNP/2012 A
(43) Publication Date : 21/03/2014

(54) Title of the invention : SYSTEM FOR USE IN EDITORIAL REVIEW OF STORED INFORMATION

(51) International classification :G06F17/30
(31) Priority Document No :12/751,541
(32) Priority Date :31/03/2010
(33) Name of priority country :U.S.A.
(86) International Application No :PCT/US2011/030162
Filing Date :28/03/2011
(87) International Publication No :WO 2011/123385
(61) Patent of Addition to Application Number :NA
Filing Date :NA
(62) Divisional to Application Number :NA
Filing Date :NA

(71)**Name of Applicant :**
1)THOMSON REUTERS GLOBAL RESOURCES
Address of Applicant :Neuhofstrasse 1 CH 6340 Baar Switzerland
(72)**Name of Inventor :**
1)WIEMANN Scott Harvey
2)DEAN Timothy Matthew
3)DAUK Richard Nicholas

(57) Abstract :
A system for use in editorial review of stored information includes a web interface (112) adapted to provide a graphical user interface to a user. A first application component (114 1) is adapted to run in the web interface (112). The first application component (114 1) includes a first user interface component (150) adapted to present information to a user (120) and receive editorial content related to the information from the user (120). A first database communication component (152) is adapted to communicate with a database (106) containing the stored information and editorialize the stored information in the database (106) in response to the editorial content received from the user (120). A first communication component (154) is adapted to communicate within the web interface (112) in response to the editorial content received from the user. A second application component is adapted to run in the web interface. The second application component (114 2) includes a second user interface component (150) adapted to present information to the user and receive editorial content related to the information from the user. A second communication component (154) is adapted to communicate with first communication component (154). A second database communication component (152) communicates with the database (106) containing the stored information based upon data received from the first application component (114 1 114 2) in response to the editorial content received from the user (120).

No. of Pages : 22 No. of Claims : 18

(12) PATENT APPLICATION PUBLICATION
(19) INDIA
(22) Date of filing of Application :25/09/2012
(21) Application No.8379/DELNP/2012 A
(43) Publication Date : 21/03/2014

(54) Title of the invention : PATHWAY STRUCTURE OF ENGINE INDUCTION SYSTEM

(51) International classification :F01M13/00,F02F7/00
(31) Priority Document No :2010-100136
(32) Priority Date :23/04/2010
(33) Name of priority country :Japan
(86) International Application No :PCT/JP2011/059048
Filing Date :12/04/2011
(87) International Publication No :WO 2011/132562
(61) Patent of Addition to Application Number :NA
Filing Date :NA
(62) Divisional to Application Number :NA
Filing Date :NA

(71)**Name of Applicant :**
1)SUZUKI MOTOR CORPORATION
Address of Applicant :300 Takatsuka cho Minami ku Hamamatsu shi Shizuoka 4328611 Japan
(72)**Name of Inventor :**
1)MURAMATSU Takayoshi
2)HAMAZAWA Kouhei

(57) Abstract :
The disclosed pathway structure of an engine induction system comprises: an air cleaner (15) disposed above a crank case (13); a carburetor (18) that is connected to an intake pathway that is lead to the front of the air cleaner (15); and an intake tube (19) that connects the carburetor (18) and the intake port of a cylinder head (13B); and has a breather hose (23) that is connected to a cylinder head cover (12A) and that is lead to the front of the air cleaner (15). The breather hose (23) passes above a throttle position sensor (22) in a lateral view and is disposed in a manner so as to consistently descend towards the cylinder head. As a result a pathway structure of an engine induction system is provided that achieves an appropriate tube disposition while being compact.

No. of Pages : 25 No. of Claims : 4

(12) PATENT APPLICATION PUBLICATION
(19) INDIA
(22) Date of filing of Application :21/09/2012
(21) Application No.8302/DELNP/2012 A
(43) Publication Date : 21/03/2014

(54) Title of the invention : APPARATUS FOR REGISTRATION OF PHOTONS AND IONIZING PARTICLES WITH SIMULTANEOUS DIRECTIONAL DEFINITION FOR EACH PHOTON OR IONIZING PARTICLE OF A POINT OF ORIGIN IN A FLUID FILLED CONDUIT

(51) International classification :G01T1/20,E21B47/12,G01V5/04
(31) Priority Document No :20100440
(32) Priority Date :25/03/2010
(33) Name of priority country :Norway
(86) International Application No :PCT/NO2011/000097
Filing Date :22/03/2011
(87) International Publication No :WO 2011/119040
(61) Patent of Addition to Application Number :NA
Filing Date :NA
(62) Divisional to Application Number :NA
Filing Date :NA

(71)**Name of Applicant :**
1)XR INVEST AS
Address of Applicant :Strandbakken 10 N 4070 Randaberg Norway
(72)**Name of Inventor :**
1)TEAGUE Phil

(57) Abstract :
A detection apparatus (D) for photons or ionizing particles (P) is described in which a detector system (11) is provided with several detecting units (11a) each including a scintillator (112) connected to a reader surface (111a) on an electronic charge reader (111) the scintillator (112) being arranged to generate cellular charges on the reader surface (111a) when capturing the photons or the ionizing particles (P) there being a collimator (113) arranged connected to the scintillator (112) opposite the electronic charge reader (111) the collimator (113) being arranged to capture photons or ionizing particles (P) exhibiting a direction of motion coinciding with a longitudinal axis (A) of the collimator (113) and to reject photons or ionizing particles (P) exhibiting a direction of motion deviating from the direction of the longitudinal axis (A) of the collimator (113).

No. of Pages : 20 No. of Claims : 10

(12) PATENT APPLICATION PUBLICATION
(19) INDIA
(22) Date of filing of Application :21/09/2012
(21) Application No.8303/DELNP/2012 A
(43) Publication Date : 21/03/2014

(54) Title of the invention : BOTTLE PUSHING MECHANISM FOR TUNNEL TYPE STERILIZING DRYER

(51) International classification :B65B35/44,B65B55/06,A61L2/04
(31) Priority Document No :201010135584.5
(32) Priority Date :30/03/2010
(33) Name of priority country :China
(86) International Application No :PCT/CN2010/074439
Filing Date :24/06/2010
(87) International Publication No :WO 2011/120259
(61) Patent of Addition to Application Number :NA
Filing Date :NA
(62) Divisional to Application Number :NA
Filing Date :NA

(71)**Name of Applicant :**
1)TRUKING TECHNOLOGY LIMITED
Address of Applicant :No. 1 Xinkang Road Yutan Ningxiang Changsha Hunan 410600 China
(72)**Name of Inventor :**
1)CAI Dayu
2)LIU Zhen
3)NING Zhigao
4)ZHU Zanming
5)YI Bo
6)LI Pengcheng
7)TANG Yue

(57) Abstract :
A bottle pushing mechanism for a tunnel type sterilizing dryer includes a bottle pushing block (2) and more than one barb (5) cooperating with meshes in a transmitting mesh belt (1). The barb (5) is connected with the bottle pushing block (2) which moves along with the transmitting mesh belt (1) by the barb (5). The bottle pushing mechanism has a simple and compact structure convenient installation high reliability good transmitting stability and no pollution.

No. of Pages : 17 No. of Claims : 4

(12) PATENT APPLICATION PUBLICATION
(19) INDIA
(22) Date of filing of Application :21/09/2012
(21) Application No.8304/DELNP/2012 A
(43) Publication Date : 21/03/2014

(54) Title of the invention : SELF ADAPTIVE PARTITION BOARD ASSEMBLY FOR TUNNEL TYPE STERILIZING DRYER

(51) International classification :F26B25/12,B65B35/44
(31) Priority Document No :201010146694.1
(32) Priority Date :14/04/2010
(33) Name of priority country :China
(86) International Application No :PCT/CN2010/074440
Filing Date :24/06/2010
(87) International Publication No :WO 2011/127691
(61) Patent of Addition to Application Number :NA
Filing Date :NA
(62) Divisional to Application Number :NA
Filing Date :NA

(71)**Name of Applicant :**
1)TRUKING TECHNOLOGY LIMITED
Address of Applicant :No. 1 Xinkang Road Yutan Ningxiang Changsha Hunan 410600 China
(72)**Name of Inventor :**
1)CAI Dayu
2)NING Zhigao
3)ZHU Zanming
4)YI Bo
5)CHENG Wei
6)LIU Zhen
7)LI Pengcheng
8)TANG Yue

(57) Abstract :
A self adaptive partition board assembly for a tunnel type sterilizing dryer comprises a partition board (4) and a partition board opening/closing mechanism mounted on an outer side board of a box. The partition board (4) is connected with a self adaptive adjusting mechanism which has a pressure rod (14) a roller wheel (16) and a pressure spring (17). The middle of the pressure rod (14) is connected with a pivot and rotates around the pivot. The roller wheel (16) is connected with one end of the pressure rod (14) via a rolling shaft (15) and contacts with the partition board (4) and the pressure spring (17) is arranged between the other end of the pressure rod (14) and the outer side board of the box. The self adaptive partition board assembly has a simple and compact structure convenient operation good reliability good self adaptive adjusting ability to thermal expansion or contraction and low cost.

No. of Pages : 14 No. of Claims : 6

(12) PATENT APPLICATION PUBLICATION
(19) INDIA
(22) Date of filing of Application :24/09/2012
(21) Application No.8308/DELNP/2012 A
(43) Publication Date : 21/03/2014

(54) Title of the invention : PROCESS FOR THE PRODUCTION OF WATER AND SOLVENT FREE POLYMERS

(51) International classification :C08C2/00,C08F6/00,C08F36/06
(31) Priority Document No :10157623.9
(32) Priority Date :24/03/2010
(33) Name of priority country :EPO
(86) International Application No :PCT/EP2011/054455
Filing Date :23/03/2011
(87) International Publication No :WO 2011/117302
(61) Patent of Addition to Application Number :NA
Filing Date :NA
(62) Divisional to Application Number :NA
Filing Date :NA

(71)**Name of Applicant :**
1)LANXESS DEUTSCHLAND GMBH
Address of Applicant :Gebude Q18 51369 Leverkusen Germany
(72)**Name of Inventor :**
1)WAGNER Paul
2)PAUL Hanns Ingolf
3)FELLER Rolf
4)KRUMBE Wolfgang
5)LE SATTLER Alicia
6)KLOPPENBURG Heike
7)SIEBUERGER Martin
8)LOVEGROVE John

(57) Abstract :
The present invention relates to water and solvent free polymers in particular water and solvent free synthetic rubber products like styrene butadiene rubber products and butadiene rubber products as well as a process for the production thereof. The invention further relates to a device suitable to accomplish said process.

No. of Pages : 41 No. of Claims : 59

(12) PATENT APPLICATION PUBLICATION
(19) INDIA
(22) Date of filing of Application :24/09/2012
(21) Application No.8309/DELNP/2012 A
(43) Publication Date : 21/03/2014

(54) Title of the invention : PROCESS FOR PRODUCTION OF SOLID FUEL FOR USE IN SINTERING SOLID FUEL FOR USE IN SINTERING AND PROCESS FOR MANUFACTURING SINTERED ORE USING SAME

(51) International classification :C10B49/04,C10B47/30,C10L5/00
(31) Priority Document No :2010-064207
(32) Priority Date :19/03/2010
(33) Name of priority country :Japan
(86) International Application No :PCT/JP2011/056609
Filing Date :18/03/2011
(87) International Publication No :WO 2011/115262
(61) Patent of Addition to Application Number :NA
Filing Date :NA
(62) Divisional to Application Number :NA
Filing Date :NA

(71)**Name of Applicant :**
1)NIPPON STEEL & SUMITOMO MATAL CORPORATION
Address of Applicant :6 1 Marunouchi 2 chome Chiyoda ku Tokyo 1008071, JAPAN
(72)**Name of Inventor :**
1)KASAMA Shunji
2)NOMURA Seiji
3)KOZURU Hiroyuki

(57) Abstract :
Disclosed is a process for the production of a solid fuel for use in sintering which comprises carbonizing coal by heating at 300 to 1150°C in a rotary kiln to produce char usable as a solid fuel for use in sintering. In the process a fuel and air are fed into the rotary kiln from the product discharge side with the quantity of the air falling within a range of 90 to 110% of the sum total of the theoretical quantity of combustion air that is necessary for the combustion of the fuel and the theoretical quantity of combustion air that is necessary for the combustion of dust particles which are generated from the coal and which have particle diameters of less than 250μm. Thus the coal is carbonized while the dust particles are removed by combustion in the rotary kiln.

No. of Pages : 33 No. of Claims : 5

(12) PATENT APPLICATION PUBLICATION
(19) INDIA
(22) Date of filing of Application :28/09/2012
(21) Application No.8506/DELNP/2012 A
(43) Publication Date : 21/03/2014

(54) Title of the invention : POWER PLANT LINE HAVING A VARIABLE SPEED PUMP

(51) International classification :F01K9/02
(31) Priority Document No :10 2010 014 588.2
(32) Priority Date :09/04/2010
(33) Name of priority country :Germany
(86) International Application No :PCT/EP2011/001344
Filing Date :18/03/2011
(87) International Publication No :WO 2011/124322
(61) Patent of Addition to Application Number :NA
Filing Date :NA
(62) Divisional to Application Number :NA
Filing Date :NA

(71)**Name of Applicant :**
1)VOITH PATENT GMBH
Address of Applicant :St. Pltener Strasse 43 89522 Heidenheim Germany
(72)**Name of Inventor :**
1)GRAF Hartmut
2)HILPERT Karl

(57) Abstract :
The invention relates to a power plant line comprising a steam turbine and/or gas turbine that rotates at a constant speed in order to drive an electric generator; a variable speed pump for conveying and/or compressing a working medium in order to drive and/or supply the process of the steam turbine and/or the gas turbine or to pump and/or compress an exhaust gas produced in the process supply or in the gas turbine. The invention is characterized in that the variable speed pump is driven by the steam turbine and/or gas turbine and a speed controllable gear train is arranged in the driving connection said gear train having a power split which comprises a mechanical main branch and a hydrodynamic secondary branch wherein driving power is branched off from the mechanical main branch via a hydrodynamic coupling or a hydrodynamic converter by means of the hydrodynamic secondary branch and fed back to the mechanical main branch at the output side of the gear train in a variable speed manner by means of a superimposing gear train.

No. of Pages : 18 No. of Claims : 10

(12) PATENT APPLICATION PUBLICATION
(19) INDIA
(22) Date of filing of Application :28/09/2012
(21) Application No.8507/DELNP/2012 A
(43) Publication Date : 21/03/2014

(54) Title of the invention : STATOR AND METHOD FOR PRODUCING A STATOR

(51) International classification :B22C9/00,B22C9/10,B22C9/24
(31) Priority Document No :10 2010 025 678.1
(32) Priority Date :30/06/2010
(33) Name of priority country :Germany
(86) International Application No :PCT/EP2011/003148
Filing Date :27/06/2011
(87) International Publication No :WO 2012/000636
(61) Patent of Addition to Application Number :NA
Filing Date :NA
(62) Divisional to Application Number :NA
Filing Date :NA

(71)**Name of Applicant :**
1)VOITH PATENT GMBH
Address of Applicant :St. Pltener Str. 43 89522 Heidenheim Germany
(72)**Name of Inventor :**
1)LAUKEMANN Dieter
2)OHR Thomas

(57) Abstract :
A stator for a hydrodynamic retarder is provided with blades a toroidal wall which supports the blades and outlet openings for a working medium which outlet openings extend through the toroidal wall between the blades. The blades and the toroidal wall are produced together with the outlet openings which are arranged in said toroidal wall as one integrated component by casting. The outlet openings are thus produced during the casting without having to be subsequently machined with the removal of material.

No. of Pages : 16 No. of Claims : 8

(12) PATENT APPLICATION PUBLICATION
(19) INDIA
(22) Date of filing of Application :27/09/2012
(21) Application No.8454/DELNP/2012 A
(43) Publication Date : 21/03/2014

(54) Title of the invention : MOLDING A LIGHTWEIGHT CAST ACOUSTICAL PRODUCT

(51) International classification :C04B26/28,C04B26/14,E04B1/82
(31) Priority Document No :12/759,308
(32) Priority Date :13/04/2010
(33) Name of priority country :U.S.A.
(86) International Application No :PCT/US2011/031560
Filing Date :07/04/2011
(87) International Publication No :WO 2011/130091
(61) Patent of Addition to Application Number :NA
Filing Date :NA
(62) Divisional to Application Number :NA
Filing Date :NA

(71)**Name of Applicant :**
1)USG INTERIORS LLC.
Address of Applicant :550 West Adams Street Chicago IL 60661 U.S.A.
(72)**Name of Inventor :**
1)ENGLERT Mark

(57) Abstract :
A lightweight cast article that is made by the method of the present invention. A foamed acoustical product is prepared by blending a starch with cold water then heating the starch/water blend to form a starch gel. Mineral wool is added to the starch gel to form a pulp and the pulp is wet mixed until wool nodules are formed. The pulp is then combined with a surfactant and an amount of foam water. The foaming agent is selected from the group consisting of a linear sodium dodecylbenzene sulfonate a cocamidopropyl betaine a cocamidopropyl hydroxysultaine their salts and mixtures thereof. Mixing of the foaming agent and pulp continues to form a foamed pulp. The foamed pulp is cast into a mold and allowing the foamed pulp to dry forming a foamed product. The foamed product is removed from the mold.

No. of Pages : 41 No. of Claims : 10

(12) PATENT APPLICATION PUBLICATION
(19) INDIA
(22) Date of filing of Application :27/09/2012
(21) Application No.8455/DELNP/2012 A
(43) Publication Date : 21/03/2014

(54) Title of the invention : OCULAR IMPLANT IRIS DIAPHRAGM

(51) International classification :A61F2/14,A61F2/16,G02C7/02
(31) Priority Document No :12/767,527
(32) Priority Date :26/04/2010
(33) Name of priority country :U.S.A.
(86) International Application No :PCT/US2011/026025
Filing Date :24/02/2011
(87) International Publication No :WO 2011/139394
(61) Patent of Addition to Application Number :NA
Filing Date :NA
(62) Divisional to Application Number :NA
Filing Date :NA

(71)**Name of Applicant :**
1)STELLAR DEVICES LLC
Address of Applicant :353 W. 48th Street New York NY 10036 U.S.A.
(72)**Name of Inventor :**
1)BASOGLU Ayhan
2)VANEGAS Richard Albert

(57) Abstract :
An ocular implant alters iris color for medical and cosmetic purposes and is made of an inert nontoxic foldable and preferably permeable to fluid flow material. It is an annular non planar structure that fits over the iris yet leaves the natural lens uncovered and extends approximately to the iridocorneal angle. Two different kinds of arc sections of a non uniform thickness make up the structure: passage arc sections and support arc sections. The passage arc sections permit humor aqueous flow under the implant. The support arc sections make contact with the iris and provide the necessary support for the passage arc sections. Auricles extend from the support arc sections and are configured to hold the implant in place by engaging the eye at the iridocorneal angle. The implant may include an artificial lens a limbal ring and various means to anchor for the artificial lens.

No. of Pages : 28 No. of Claims : 15

(12) PATENT APPLICATION PUBLICATION
(19) INDIA
(22) Date of filing of Application :27/09/2012
(21) Application No.8456/DELNP/2012 A
(43) Publication Date : 21/03/2014

(54) Title of the invention : WEDGE LOCK FOR USE WITH A SINGLE BOARD COMPUTER A SINGLE BOARD COMPUTER AND METHOD OF ASSEMBLING A COMPUTER SYSTEM

(51) International classification :H05K7/14,H05K7/20
(31) Priority Document No :12/766608
(32) Priority Date :23/04/2010
(33) Name of priority country :U.S.A.
(86) International Application No :PCT/US2011/033438
Filing Date :21/04/2011
(87) International Publication No :WO 2011/133777
(61) Patent of Addition to Application Number :NA
Filing Date :NA
(62) Divisional to Application Number :NA
Filing Date :NA

(71)**Name of Applicant :**
1)GE INTELLIGENT PLATFORMS EMBEDDED SYSTEMS INC.
Address of Applicant :2500 Austin Drive Charlottesville VA 22911 U.S.A.
(72)**Name of Inventor :**
1)SPORER Bernd
2)IRELAND Robert

(57) Abstract :
A wedge lock for use with a single board computer includes a cooling plate positioned with respect to a printed circuit board (PCB) a clamp device configured to secure the single board computer in an operating environment and a heat conductance plate positioned along a top surface of the cooling plate and a top surface of the clamp device to facilitate conduction cooling of the PCB.

No. of Pages : 20 No. of Claims : 20

(12) PATENT APPLICATION PUBLICATION
(19) INDIA
(22) Date of filing of Application :27/09/2012
(21) Application No.8457/DELNP/2012 A
(43) Publication Date : 21/03/2014

(54) Title of the invention : GRAVURE PRINTING PLATE AND METHOD FOR PRODUCING GRAVURE PRINTING PLATE

(51) International classification :B41N1/06,B41C1/05,B41M1/10
(31) Priority Document No :2010-176307
(32) Priority Date :05/08/2010
(33) Name of priority country :Japan
(86) International Application No :PCT/JP2011/066037
Filing Date :14/07/2011
(87) International Publication No :WO 2012/017792
(61) Patent of Addition to Application Number :NA
Filing Date :NA
(62) Divisional to Application Number :NA
Filing Date :NA

(71)**Name of Applicant :**
1)THINK LABORATORY CO. LTD.
Address of Applicant :1201 11 Takada Kashiwa shi Chiba 2778525 Japan
(72)**Name of Inventor :**
1)SHIGETA Tatsuo

(57) Abstract :
Disclosed are a gravure printing plate and a method for producing a gravure printing plate capable of realizing rich gradation by enlarging a density range more than conventional devices capable of performing fine tone setting and capable of suppressing the generation of moire. A gravure printing plate is provided on its plate face with both an FM screen cell and an AM screen cell and the FM screen cell has a depth different from a depth of the AM screen cell. It is preferable that the cell having a shallow depth is a sub cell and the cell having a deep depth is a main cell among the cells having different depths.

No. of Pages : 27 No. of Claims : 11

(12) PATENT APPLICATION PUBLICATION
(19) INDIA
(22) Date of filing of Application :28/09/2012
(21) Application No.8520/DELNP/2012 A
(43) Publication Date : 21/03/2014

(54) Title of the invention : METHOD FOR ACTUATING A NUMBER OF MODULES

(51) International classification :G06F13/42,H04L12/413
(31) Priority Document No :10 2010 003 558.0
(32) Priority Date :31/03/2010
(33) Name of priority country :Germany
(86) International Application No :PCT/EP2011/053973
Filing Date :16/03/2011
(87) International Publication No :WO 2011/120806
(61) Patent of Addition to Application Number :NA
Filing Date :NA
(62) Divisional to Application Number :NA
Filing Date :NA

(71)**Name of Applicant :**
1)ROBERT BOSCH GMBH
Address of Applicant :Postfach 30 02 20 70442 Stuttgart Germany
(72)**Name of Inventor :**
1)SCHMITT Stephen
2)WAGNER Thomas
3)HANISCH Juergen

(57) Abstract :
The invention relates to a method and a circuit arrangement (10) for actuating a number of modules. The method is carried out by means of the circuit arrangement (10) which implements a flexible trigger mechanism.

No. of Pages : 11 No. of Claims : 10

(12) PATENT APPLICATION PUBLICATION
(19) INDIA
(22) Date of filing of Application :28/09/2012
(21) Application No.8521/DELNP/2012 A
(43) Publication Date : 21/03/2014

(54) Title of the invention : METHOD FOR DRIVING AN ELECTRIC MOTOR

(51) International classification :H02P6/00,H02M7/527,H02P6/08
(31) Priority Document No :10 2010 003 527.0
(32) Priority Date :31/03/2010
(33) Name of priority country :Germany
(86) International Application No :PCT/EP2011/054050
Filing Date :17/03/2011
(87) International Publication No :WO 2011/120816
(61) Patent of Addition to Application Number :NA
Filing Date :NA
(62) Divisional to Application Number :NA
Filing Date :NA

(71)**Name of Applicant :**
1)ROBERT BOSCH GMBH
Address of Applicant :Postfach 30 02 20 70442 Stuttgart Germany
(72)**Name of Inventor :**
1)WAGNER Thomas
2)THOSS Dieter
3)MERKER Andreas

(57) Abstract :
A method for driving an electric motor and a circuit arrangement (100) for driving an electric motor are described. In this case a number of output patterns (130) are stored in a signal evaluation module (110) wherein an input pattern (125) is predefined and one of the output patterns (130) is output on the basis of the input pattern (125) and is used to drive the electric motor.

No. of Pages : 11 No. of Claims : 10

(12) PATENT APPLICATION PUBLICATION
(19) INDIA
(22) Date of filing of Application :28/09/2012
(21) Application No.8522/DELNP/2012 A
(43) Publication Date : 21/03/2014

(54) Title of the invention : MODULAR STRUCTURE FOR PROCESSING DATA

(51) International classification :G06F1/14
(31) Priority Document No :10 2010 003 521.1
(32) Priority Date :31/03/2010
(33) Name of priority country :Germany
(86) International Application No :PCT/EP2011/053965
Filing Date :16/03/2011
(87) International Publication No :WO 2011/120803
(61) Patent of Addition to Application Number :NA
Filing Date :NA
(62) Divisional to Application Number :NA
Filing Date :NA

(71)**Name of Applicant :**
1)ROBERT BOSCH GMBH
Address of Applicant :Postfach 30 02 20 70442 Stuttgart Germany
(72)**Name of Inventor :**
1)BOEHL Eberhard
2)BARTHOLOMAE Ruben
3)SCHMITT Stephen
4)WAGNER Thomas
5)HEMPEL Andreas
6)AUE Axel
7)THOSS Dieter
8)LINDENKREUZ Thomas
9)SCHAEFER Achim
10)HANISCH Juergen
11)SCHEURER Uwe
12)MERKER Andreas
13)BECKER Bernd

(57) Abstract :
The invention relates to a circuit arrangement (100) for a data processing system for processing data in a plurality of modules (11 12 14 18). Said circuit arrangement (100) is configured such that each module (11 12 14 18) is provided with at least one clock pulse a time base and a base of at least one additional physical variable. Said circuit arrangement (100) also comprises a central routing unit (10) to which the plurality of modules (11 12 14 18) are coupled and via which the plurality of modules (11 12 14 18) can periodically exchange data amongst themselves based on the time base and/or the base of other physical variables and each module (11 12 14 18) is configured independently and parallel to other modules of the plurality of modules (11 12 14 18) in order to process data. The invention also relates to a corresponding method.

No. of Pages : 14 No. of Claims : 10

(12) PATENT APPLICATION PUBLICATION
(19) INDIA
(22) Date of filing of Application :21/09/2012
(21) Application No.8257/DELNP/2012 A
(43) Publication Date : 21/03/2014

(54) Title of the invention : DISPLAY ARRANGEMENT AND THE MOUNTING THEREOF

(51) International classification :G02F1/13
(31) Priority Document No :10 2010 012 372.2
(32) Priority Date :22/03/2010
(33) Name of priority country :Germany
(86) International Application No :PCT/EP2011/000758
Filing Date :17/02/2011
(87) International Publication No :WO 2011/116856
(61) Patent of Addition to Application Number :NA
Filing Date :NA
(62) Divisional to Application Number :NA
Filing Date :NA

(71)**Name of Applicant :**
1)JOHNSON CONTROLS AUTOMOTIVE ELECTRONICS GMBH
Address of Applicant :Benzstrae 6 75196 Remchingen Germany
(72)**Name of Inventor :**
1)ARHEIT Thomas

(57) Abstract :
The invention relates to a display arrangement and the mounting thereof.

No. of Pages : 15 No. of Claims : 10

(12) PATENT APPLICATION PUBLICATION
(19) INDIA
(22) Date of filing of Application :21/09/2012
(21) Application No.8258/DELNP/2012 A
(43) Publication Date : 21/03/2014

(54) Title of the invention : STEEL PILE DRIVING METHOD INVOLVING DEGASSING PROCESS

(51) International classification :E02D7/18,E02D5/30,E02D5/32
(31) Priority Document No :2010084868
(32) Priority Date :01/04/2010
(33) Name of priority country :Japan
(86) International Application No :PCT/JP2011/057966
Filing Date :30/03/2011
(87) International Publication No :WO 2011/125710
(61) Patent of Addition to Application Number :NA
Filing Date :NA
(62) Divisional to Application Number :NA
Filing Date :NA

(71)**Name of Applicant :**
1)NIPPON STEEL CORPORATION
Address of Applicant :6 1 Marunouchi 2 chome Chiyoda ku Tokyo 1008071 Japan
2)CHOWA KOGYO CO. LTD.
(72)**Name of Inventor :**
1)YAMASHITA Hisao
2)OKUMURA Makoto
3)NISHIUMI Kenji
4)ISHIHAMA Yoshiroh
5)TANAKA Ryuta
6)SUZUKI Yukichi
7)TAKAHASHI Kenji
8)YOKOYAMA Hiroyasu

(57) Abstract :
Disclosed is a steel pile driving method for driving a steel pile into the ground using a vibratory hammer and a transfer pipe that is disposed along the lengthwise direction of the aforementioned steel pile wherein the steel pile driving method involves a step for inserting the aforementioned steel pile to a prescribed depth in the aforementioned ground by spraying water from the aforementioned transfer pipe while operating the aforementioned vibratory hammer a step for forming a base protecting section around the end of the aforementioned steel pile by spraying a solidifying fluid material from the aforementioned transfer pipe while operating the aforementioned vibratory hammer and a step for degassing the aforementioned solidifying fluid material by operating the aforementioned vibratory hammer for a fixed period of time after the aforementioned steel pile has been positioned at an anchoring depth and the spray of the aforementioned solidifying fluid material has been halted.

No. of Pages : 39 No. of Claims : 4

(12) PATENT APPLICATION PUBLICATION
(19) INDIA
(22) Date of filing of Application :27/09/2012
(21) Application No.8467/DELNP/2012 A
(43) Publication Date : 21/03/2014

(54) Title of the invention : TWO STAGE VALVE AND HYDRAULIC DAMPED VALVE

(51) International classification :F16F9/34,F16F9/32
(31) Priority Document No :12/791,036
(32) Priority Date :01/06/2010
(33) Name of priority country :U.S.A.
(86) International Application No :PCT/US2011/035728
Filing Date :09/05/2011
(87) International Publication No :WO 2011/152960
(61) Patent of Addition to Application Number :NA
Filing Date :NA
(62) Divisional to Application Number :NA
Filing Date :NA

(71)**Name of Applicant :**
1)TENNECO AUTOMOTIVE OPERATING COMPANY INC.
Address of Applicant :500 North Field Drive Lake Forest Illinois 60045 U.S.A.
(72)**Name of Inventor :**
1)SIX Kristoff
2)OUKHEDOU MHand N.
3)VANBRABANT Ronny
4)GOMMANS Frank

(57) Abstract :
A shock absorber includes a two stage valve assembly that has two valve discs. The second valve disc defines the first stage at lower valve pressures and the first valve disc defines the second stage at higher valve pressures. The two valve discs can be defined by a single piece component or they can be separate components. The second valve disc can permit fluid flow by deflection of the second valve disc or by movement of the entire second valve disc. The two stage valve assembly can be incorporated into the piston assembly of the shock absorber and/or the two stage valve assembly can be incorporated into a base valve assembly.

No. of Pages : 45 No. of Claims : 15

(12) PATENT APPLICATION PUBLICATION
(19) INDIA
(22) Date of filing of Application :27/09/2012
(21) Application No.8468/DELNP/2012 A
(43) Publication Date : 21/03/2014

(54) Title of the invention : BIOMARKERS FOR HYPERTENSIVE DISORDERS OF PREGNANCY

(51) International classification :G01N33/68
(31) Priority Document No :10159803.5
(32) Priority Date :13/04/2010
(33) Name of priority country :EPO
(86) International Application No :PCT/EP2011/055768
Filing Date :13/04/2011
(87) International Publication No :WO 2011/128357
(61) Patent of Addition to Application Number :NA
Filing Date :NA
(62) Divisional to Application Number :NA
Filing Date :NA

(71)**Name of Applicant :**
1)PRONOTA N.V.
Address of Applicant :Technologiepark 4 B 9052 Zwijnaarde Belgium
(72)**Name of Inventor :**
1)KAS Koen

(57) Abstract :
The application discloses new biomarkers for hypertensive disorders of pregnancy and particularly preeclampsia; methods for the diagnosis prediction prognosis and/or monitoring said disorders based on measuring said biomarkers; and kits and devices for measuring said biomarker and/or performing said methods.

No. of Pages : 106 No. of Claims : 26

(12) PATENT APPLICATION PUBLICATION
(19) INDIA
(22) Date of filing of Application :28/09/2012
(21) Application No.8527/DELNP/2012 A
(43) Publication Date : 21/03/2014

(54) Title of the invention : ROTOR BLADE FORM FOR PRODUCING A ROTOR BLADE OF A WIND POWER PLANT AND METHOD FOR PRODUCING SAME

(51) International classification :B29C70/44,B29C33/02,B29C35/02
(31) Priority Document No :10 2010 013 405.8
(32) Priority Date :30/03/2010
(33) Name of priority country :Germany
(86) International Application No :PCT/EP2011/054958
Filing Date :30/03/2011
(87) International Publication No :WO 2011/124516
(61) Patent of Addition to Application Number :NA
Filing Date :NA
(62) Divisional to Application Number :NA
Filing Date :NA

(71)**Name of Applicant :**
1)WOBBEN PROPERTIES GMBH
Address of Applicant :Dreekamp 5 26605 Aurich Germany
(72)**Name of Inventor :**
1)HARMS Stephan
2)KOLBE Uwe
3)OVERLANDER Torsten

(57) Abstract :
The invention relates to a rotor blade mold (1) for producing a rotor blade of a wind power plant or a part thereof having a heatable mold section having a shaping surface for shaping the rotor blade surface and wherein the heatable mold section comprises at least two heating sections (Bi) and each heating section comprises at least one electrical resistance heating element disposed at or below the shaping surface and a supply unit (vi) for supplying electrical power to the at least one resistance heating element for heating.

No. of Pages : 31 No. of Claims : 15

(12) PATENT APPLICATION PUBLICATION
(19) INDIA
(22) Date of filing of Application :28/09/2012
(21) Application No.8528/DELNP/2012 A
(43) Publication Date : 21/03/2014

(54) Title of the invention : THERAPEUTIC DLL4 BINDING PROTEINS

(51) International classification :C07K16/18
(31) Priority Document No :61/309494
(32) Priority Date :02/03/2010
(33) Name of priority country :U.S.A.
(86) International Application No :PCT/US2011/026489
Filing Date :28/02/2011
(87) International Publication No :WO 2011/109298
(61) Patent of Addition to Application Number :NA
Filing Date :NA
(62) Divisional to Application Number :NA
Filing Date :NA

(71)**Name of Applicant :**
1)ABBVIE INC.
Address of Applicant :1 North Waukegan Road North Chicago IL 60064 U.S.A.
(72)**Name of Inventor :**
1)LI Yingchun
2)GU Jijie James
3)MORGAN LAPPE Susan
4)CHEN Mingjiu
5)HSIEH Chung Ming

(57) Abstract :
DLL4 binding proteins are described herein including antibodies CDR grafted antibodies humanized antibodies and DLL4 binding fragments thereof proteins that bind DLL4 with high affinity and DLL4 binding proteins that neutralize DLL4 and/or VEGF activity. The DLL4 binding proteins are useful for treating or preventing cancers and tumors and especially for treating or preventing tumor angiogenesis.

No. of Pages : 244 No. of Claims : 117

(12) PATENT APPLICATION PUBLICATION
(19) INDIA
(22) Date of filing of Application :28/09/2012
(21) Application No.8529/DELNP/2012 A
(43) Publication Date : 21/03/2014

(54) Title of the invention : A PROCESS FOR STEREOSELECTIVE SYNTHESIS OF 5 FLUORO 1 (2R 5S) [2 (HYDROXYMETHYL) 1 3 OXATHIOLAN 5 YL]CYTOSINE

(51) International classification :C07D411/04
(31) Priority Document No :489/DEL/2010
(32) Priority Date :04/03/2010
(33) Name of priority country :India
(86) International Application No :PCT/IB2011/050824
Filing Date :25/02/2011
(87) International Publication No :WO 2011/107920
(61) Patent of Addition to Application Number :NA
Filing Date :NA
(62) Divisional to Application Number :NA
Filing Date :NA

(71)**Name of Applicant :**
1)RANBAXY LABORATORIES LIMITED
Address of Applicant :Head Office: 12th Floor Devika Tower 06 Nehru Place New Delhi Delhi 110019 India
(72)**Name of Inventor :**
1)KSHIRSAGAR Prakash Bhimaji
2)BHOGE Satish Manohar
3)RICHHARIYA Santosh
4)SINGH Kaptan

(57) Abstract :
The present invention provides an improved process for stereoselective preparation of 5 fluoro l (2R 5S) [2 (hydroxymethyl) l 3 oxathiolan 5 yl]cytosine and pharmaceutically acceptable salts thereof.

No. of Pages : 18 No. of Claims : 16

(12) PATENT APPLICATION PUBLICATION
(19) INDIA
(22) Date of filing of Application :25/09/2012
(21) Application No.8355/DELNP/2012 A
(43) Publication Date : 21/03/2014

(54) Title of the invention : METHOD AND SYSTEM FOR CONFIGURING WIRELESS TERMINAL

(51) International classification :H04W88/18
(31) Priority Document No :201010287805.0
(32) Priority Date :17/09/2010
(33) Name of priority country :China
(86) International Application No :PCT/CN2011/072115
Filing Date :24/03/2011
(87) International Publication No :WO 2012/034390
(61) Patent of Addition to Application Number :NA
Filing Date :NA
(62) Divisional to Application Number :NA
Filing Date :NA

(71)**Name of Applicant :**
1)ZTE CORPORATION
Address of Applicant :ZTE Plaza Keji Road South Hi Tech Industrial Park Nanshan Shenzhen Guangdong 518057 China
(72)**Name of Inventor :**
1)WU Xianbo

(57) Abstract :
A method and system for configuring a wireless terminal are disclosed by the present invention which relates to the field of mobile communications. The method includes: when an over the air pre configuration service server (OTAPS) receives a configuration result message returned by a mobile terminal the OTAPS extracts the message identifier of the configuration result message; the OTAPS compares the extracted message identifier with that of a stored configuration short message; when there is a message identifier matched with the extracted message identifier it is determined that the configuration is successful and the configuration result is recorded. The technical solutions provided by the present invention are applied for configuring parameters in a mobile terminal thus solving the problem that the performing result of configuration can not be acquired.

No. of Pages : 25 No. of Claims : 11

(12) PATENT APPLICATION PUBLICATION
(19) INDIA
(22) Date of filing of Application :28/09/2012
(21) Application No.8515/DELNP/2012 A
(43) Publication Date : 21/03/2014

(54) Title of the invention : INJECTION MOLDING MACHINE WITH INTEGRATED PART HANDLING APPARATUS

(51) International classification :B29C45/64
(31) Priority Document No :61/320,020
(32) Priority Date :01/04/2010
(33) Name of priority country :U.S.A.
(86) International Application No :PCT/CA2011/000358
Filing Date :01/04/2011
(87) International Publication No :WO 2011/120154
(61) Patent of Addition to Application Number :NA
Filing Date :NA
(62) Divisional to Application Number :NA
Filing Date :NA

(71)**Name of Applicant :**
1)ATHENA AUTOMATION LTD.
Address of Applicant :372 New Enterprise Way Vaughan Ontario L4H 0S8 Canada
(72)**Name of Inventor :**
1)SCHAD Robert D.
2)LINK Carsten
3)CHEN Yanghuan

(57) Abstract :
An injection molding machine comprises: a machine base having a top surface and a pair of platens supported on the top surface of the machine base at least one of the platens translatable along a machine axis between open and closed positions. An end effector is moveable relative to the machine base between an advanced position and a retracted position for interacting with parts associated with production in the injection molding machine. An upright has a lower end adjustably coupled to the machine base and an upper end spaced apart from the top surface of the machine base and coupled to the end effector.

No. of Pages : 38 No. of Claims : 41

(12) PATENT APPLICATION PUBLICATION
(19) INDIA
(22) Date of filing of Application :28/09/2012
(21) Application No.8516/DELNP/2012 A
(43) Publication Date : 21/03/2014

(54) Title of the invention : INJECTION MOLDED PARTS PRODUCED FROM A POLYMER COMPOSITION COMPRISING POLYAMIDE 410 (PA 410)

(51) International classification :B29C45/00
(31) Priority Document No :10160121.9
(32) Priority Date :16/04/2010
(33) Name of priority country :EPO
(86) International Application No :PCT/EP2011/055923
Filing Date :14/04/2011
(87) International Publication No :WO 2011/128409
(61) Patent of Addition to Application Number :NA
Filing Date :NA
(62) Divisional to Application Number :NA
Filing Date :NA

(71)**Name of Applicant :**
1)DSM IP Assets B.V.
Address of Applicant :Het Overloon 1 NL 6411 TE Heerlen Netherlands
(72)**Name of Inventor :**
1)VEGTE VAN DER Eric WIllem
2)LIGTHART Ronald

(57) Abstract :
Injection molded polymeric part produced from a polymer composition comprising polyamide 410 (PA 410) and less than 1.5 weight % of a mold release agent. In a preferred embodiment the polymer composition contains less than 1 wt. % of a mold release agent.

No. of Pages : 8 No. of Claims : 12

(12) PATENT APPLICATION PUBLICATION
(19) INDIA
(22) Date of filing of Application :28/09/2012
(21) Application No.8517/DELNP/2012 A
(43) Publication Date : 21/03/2014

(54) Title of the invention : INTERMEDIATES USEFUL FOR THE SYNTHESIS OF PYRROLOBENZODIAZEPINES

(51) International classification	:C07D207/20,C07D207/22,C07D207/24
(31) Priority Document No	:1006340.2
(32) Priority Date	:15/04/2010
(33) Name of priority country	:U.K.
(86) International Application No Filing Date	:PCT/GB2011/000588 :15/04/2011
(87) International Publication No	:WO 2011/128650
(61) Patent of Addition to Application Number Filing Date	:NA :NA
(62) Divisional to Application Number Filing Date	:NA :NA

(71)**Name of Applicant :**
1)SPIROGEN DEVELOPMENTS SARL
Address of Applicant :c/o Michael Forer Chemin de la Pacottaz 1 1806 St Lgier Chisaz Switzerland
(72)**Name of Inventor :**
1)HOWARD Philip Wilson
2)MASTERSON Luke
3)TIBERGHIEN Arnaud

(57) Abstract :
A compound of formula (I): which is substantially free of any of the corresponding compound of formula (IB): methods of making such compounds and the further transformation of such compounds.

No. of Pages : 109 No. of Claims : 24

(12) PATENT APPLICATION PUBLICATION
(19) INDIA
(22) Date of filing of Application :28/09/2012
(21) Application No.8518/DELNP/2012 A
(43) Publication Date : 21/03/2014

(54) Title of the invention : FC BINDING PROTEIN AND METHOD FOR PRODUCING SAME

(51) International classification :C12N15/09,C07K14/735,C12N1/21
(31) Priority Document No :2010-052789
(32) Priority Date :10/03/2010
(33) Name of priority country:Japan
(86) International Application No :PCT/JP2011/001413
Filing Date :10/03/2011
(87) International Publication No :WO 2011/111393
(61) Patent of Addition to Application Number :NA
Filing Date :NA
(62) Divisional to Application Number :NA
Filing Date :NA

(71)**Name of Applicant :**
1)SAGAMI CHEMICAL RESEARCH INSTITUTE
Address of Applicant :2743 1 Hayakawa Ayase shi Kanagawa 2521193 Japan
2)TOSOH CORPORATION
(72)**Name of Inventor :**
1)HATAYAMA Kouta
2)ASAOKA Yoshiharu
3)TANAKA Toru
4)IDE Teruhiko

(57) Abstract :
Disclosed are: an Fc binding protein having increased stability with respect to heat acid and/or alkalinity compared with the wild type; a method for producing same; and a method for specifically isolating protein containing an Fc binding protein binding site using said Fc binding protein as a ligand for affinity chromatography. An Fc binding protein was obtained having increased stability with respect to heat acid and/or alkalinity compared with the wild type human Fc receptor by means of substituting at least one specific amino acid residue in the extracellular domain of the wild type human Fc receptor with another amino acid residue. The Fc binding protein is useful as a ligand for affinity chromatography for example by immobilizing in a solid phase. Also when the Fc binding protein is expressed using a host that has been transformed with an expression vector containing a polynucleotide coding for said protein the amount of produced protein is increased compared with using a wild type human Fc receptor.

No. of Pages : 284 No. of Claims : 11

(12) PATENT APPLICATION PUBLICATION
(19) INDIA
(22) Date of filing of Application :25/09/2012
(21) Application No.8366/DELNP/2012 A
(43) Publication Date : 21/03/2014

(54) Title of the invention : SAFETY APPARATUS FOR CLOSING AND OPENING A DOOR

(51) International classification :E05F15/00,E05F15/20
(31) Priority Document No :10290161.8
(32) Priority Date :26/03/2010
(33) Name of priority country :EPO
(86) International Application No :PCT/EP2010/055699
Filing Date :28/04/2010
(87) International Publication No :WO 2011/116836
(61) Patent of Addition to Application Number :NA
Filing Date :NA
(62) Divisional to Application Number :NA
Filing Date :NA

(71)**Name of Applicant :**
1)SIEMENS SAS
Address of Applicant :9 boulevard Finot F 92320 St. Denis France
(72)**Name of Inventor :**
1)EL FASSI Sa¯d
2)NOGUEIRA ALVES Clara

(57) Abstract :
The invention relates in particular to an apparatus for automatically closing and opening at least one door (P) in a frame (CAD) said door being controlled by a controller (CTRL) providing a safety mode for retaining the door in an open state and if need be a door reopening mode in the event of an obstacle blocking the complete closure of the door into the frame characterized by: at least one camera (CAM) having a vision axis intersecting at least the plane of the frame and providing an image of a space divided by the plane of the frame; at least one image analysis unit (AN) that isolates the regions of interest of an obstacle in the space; a calculator (CALC) for extracting at least one geometrical characteristic of each region of interest for classifying the same into at least one closest category of different safety scenarios of known characteristics and for outputting to the controller a safety signal (SEC) which activates the safety mode and which is dependent on the evaluation of a safety alarm value calculated by a formula in accordance with the category using at least one weighing of dimensional criteria applied to the geometrical characteristics.

No. of Pages : 20 No. of Claims : 10

(12) PATENT APPLICATION PUBLICATION
(19) INDIA
(22) Date of filing of Application :24/09/2012
(21) Application No.8336/DELNP/2012 A
(43) Publication Date : 21/03/2014

(54) Title of the invention : METHODS AND ARRANGEMENTS FOR AD HOC WIRELESS NETWORKS

(51) International classification :H04W76/04,H04W84/18
(31) Priority Document No :NA
(32) Priority Date :NA
(33) Name of priority country :NA
(86) International Application No :PCT/SE2010/050374
Filing Date :06/04/2010
(87) International Publication No :WO 2011/126414
(61) Patent of Addition to Application Number :NA
Filing Date :NA
(62) Divisional to Application Number :NA
Filing Date :NA

(71)**Name of Applicant :**
1)TELEFONAKTIEBOLAGET L M ERICSSON (PUBL)
Address of Applicant :S 164 83 Stockholm Sweden
(72)**Name of Inventor :**
1)KAZMI Muhammad
2)FODOR Gabor

(57) Abstract :
The present invention relates to methods and arrangements in an ad hoc network wherein the ad hoc devices are configured to enter DRX mode. The basic concept of the embodiments of the present invention is to let a node initiate and maintain transmission of a specific reference signal pattern during the DRX operation of an adhoc device referred to as a UE. The transmission of the reference signal pattern enables the UE to maintain synchronization.

No. of Pages : 41 No. of Claims : 32

(12) PATENT APPLICATION PUBLICATION
(19) INDIA
(22) Date of filing of Application :24/09/2012
(21) Application No.8337/DELNP/2012 A
(43) Publication Date : 21/03/2014

(54) Title of the invention : DEVICE FOR EXTRACTING WATER FROM THE AIR AND SYSTEM AND MACHINE FOR THE PRODUCTION OF DRINKING WATER

(51) International classification :E03B3/28,F25B41/04
(31) Priority Document No :FR 1052117
(32) Priority Date :24/03/2010
(33) Name of priority country :France
(86) International Application No :PCT/IB2011/051263
Filing Date :24/03/2011
(87) International Publication No :WO 2011/117841
(61) Patent of Addition to Application Number :NA
Filing Date :NA
(62) Divisional to Application Number :NA
Filing Date :NA

(71)**Name of Applicant :**
1)WWS
Address of Applicant :18 rue de la Touloubre F 13770 Venelles France
(72)**Name of Inventor :**
1)POYET Michel

(57) Abstract :
The invention relates to a device (30) for extracting water contained in the air by means of condensation said device (30) comprising: a fan (28) for creating an air flow; a heat transfer fluid evaporator (32) for condensing the water in the air flow created by the fan (28); and a compressor (34) for compressing the heat transfer fluid evaporated by the evaporator (32) which compressor (34) is placed in the air flow downstream of the evaporator (32). The invention also relates to a system for producing drinking water from the air comprising the aforementioned water extraction device (30). The invention further relates to a machine for producing drinking water from the air comprising the aforementioned system. The invention can be used to produce water from the air with an improved performance.

No. of Pages : 37 No. of Claims : 24

(12) PATENT APPLICATION PUBLICATION
(19) INDIA
(22) Date of filing of Application :26/09/2012
(21) Application No.8433/DELNP/2012 A
(43) Publication Date : 21/03/2014

(54) Title of the invention : A FAST DISSOLVING PHARMACEUTICAL COMPOSITION

(51) International classification :A61K9/00,A61K9/19,A61K31/426
(31) Priority Document No :742/DEL/2010
(32) Priority Date :29/03/2010
(33) Name of priority country :India
(86) International Application No :PCT/EP2011/054698
Filing Date :28/03/2011
(87) International Publication No :WO 2011/120903
(61) Patent of Addition to Application Number :NA
Filing Date :NA
(62) Divisional to Application Number :NA
Filing Date :NA

(71)**Name of Applicant :**
1)FERRING B.V.
Address of Applicant :Polaris Avenue 144 NL 2132 JX Hoofddorp Netherlands
(72)**Name of Inventor :**
1)AHUJA Varinder
2)GUNJIKAR Tejas
3)WANNERBERGER Kristin

(57) Abstract :
The subject invention is directed to a pharmaceutical composition comprising an open matrix network carrying a pharmaceutically active ingredient wherein the open matrix network comprises inulin.

No. of Pages : 39 No. of Claims : 25

(12) PATENT APPLICATION PUBLICATION
(19) INDIA
(22) Date of filing of Application :26/09/2012
(21) Application No.8403/DELNP/2012 A
(43) Publication Date : 21/03/2014

(54) Title of the invention : METHOD AND GUIDANCE UNIT FOR GUIDING BATTERY OPERATED TRANSPORTATION MEANS TO RECONDITIONING STATIONS

(51) International classification :G01C21/34,B60L11/18
(31) Priority Document No :10162188.6
(32) Priority Date :06/05/2010
(33) Name of priority country :EPO
(86) International Application No :PCT/EP2011/056688
Filing Date :27/04/2011
(87) International Publication No :WO 2011/138205
(61) Patent of Addition to Application Number :NA
Filing Date :NA
(62) Divisional to Application Number :NA
Filing Date :NA

(71)**Name of Applicant :**
1)LEICA GEOSYSTEMS AG
Address of Applicant :Heinrich Wild Strasse CH 9435 Heerbrugg Switzerland
(72)**Name of Inventor :**
1)PETTERSSON Bo

(57) Abstract :
The invention concerns a method unit and a computer program product for guiding a mobile transportation means (2b) of a set of transportation means (2) which transportation means (2) have each associated a powering battery of a set of batteries (4) to a selected reconditioning station (3b) of a set of reconditioning stations (3) in a geographically distributed arrangement of the transportation means (2) and the reconditioning stations (3). It comprises the steps of determining a position of the battery determining a condition of the battery forecasting a consumption characteristic of the transportation means (2b) evaluating an achievable range of mobility of the transportation means (2b) assigning the selected reconditioning station (3a) of the set of reconditioning stations (3) to the transportation means (2b) for charge or substitution of the powering battery which is located within the range of mobility of the transportation means (2b) along a path to a desired target (5) and guiding the transportation means (2b) to the selected reconditioning station (3b) wherein an optimisation of the assignment and/or the path is executed by a search algorithm for assigning the set of transportation means (2) to the set of reconditioning stations (3) and batteries (4) based on actual and/or forecasted information about multiple entities of the sets of transportation means (2) stations (3) and batteries (4) as well as their conditions.

No. of Pages : 55 No. of Claims : 15

(12) PATENT APPLICATION PUBLICATION
(19) INDIA
(22) Date of filing of Application :26/09/2012
(21) Application No.8404/DELNP/2012 A
(43) Publication Date : 21/03/2014

(54) Title of the invention : SURFACE SENSING DEVICE WITH OPTICAL MONITORING SYSTEM

(51) International classification :G01B5/012,G01B11/00
(31) Priority Document No :10162017.7
(32) Priority Date :05/05/2010
(33) Name of priority country :EPO
(86) International Application No :PCT/EP2011/056689
Filing Date :27/04/2011
(87) International Publication No :WO 2011/138206
(61) Patent of Addition to Application Number :NA
Filing Date :NA
(62) Divisional to Application Number :NA
Filing Date :NA

(71)**Name of Applicant :**
1)LEICA GEOSYSTEMS AG
Address of Applicant :Heinrich Wild Strasse CH 9435 Heerbrugg Switzerland
(72)**Name of Inventor :**
1)JENSEN Thomas
2)SIERCKS Knut

(57) Abstract :
The invention generally relates to a surface sensing device comprising an optical monitoring system for measuring a displacement of the tip a hollow stylus with respect to a stylus carrier. According to the invention the light emitting means of the optical monitoring system are built in such a way that the beam has at least two distinguishable light characteristics with a given characteristics distribution. The optical monitoring system further comprises an optically encoding component (100) positioned in the stylus carrier in the optical return path and designed to transform the information of an impinging position (50 50) of the returned beam upon the optical encoding component (100) into a change of the characteristics distribution of the returned beam and the detector means is sensitive for the at least two distinguishable light characteristics and built for generating the electrical output signal dependent on the changed characteristics distribution of the returned beam.

No. of Pages : 93 No. of Claims : 18

(12) PATENT APPLICATION PUBLICATION
(19) INDIA
(22) Date of filing of Application :24/09/2012
(21) Application No.8346/DELNP/2012 A
(43) Publication Date : 21/03/2014

(54) Title of the invention : PLANT DIAGNOSIS DEVICE DIAGNOSIS METHOD AND DIAGNOSIS PROGRAM

(51) International classification :G05B23/02,G01M19/00
(31) Priority Document No :NA
(32) Priority Date :NA
(33) Name of priority country :NA
(86) International Application No :PCT/JP2010/002575
Filing Date :08/04/2010
(87) International Publication No :WO 2011/125130
(61) Patent of Addition to Application Number :NA
Filing Date :NA
(62) Divisional to Application Number :NA
Filing Date :NA

(71)**Name of Applicant :**
1)HITACHI LTD.
Address of Applicant :6 6 Marunouchi 1 chome Chiyoda ku Tokyo 1008280 Japan
(72)**Name of Inventor :**
1)SEKIAI Takaaki
2)EGUCHI Toru
3)KUSUMI Naohiro
4)FUKAI Masayuki
5)SHIMIZU Satoru

(57) Abstract :
Disclosed is a plant diagnosis device which detects abnormality in the subject being diagnosed from the measurement signal of the plant being diagnosed and reports the abnormality. Specifically disclosed is a plant diagnosis device which is configured of: a state variation detection unit which categorizes and stores the measurement signals of the plant being diagnosed and determines that the state has varied when the measurement signal does not belong to the categories obtained by the categorization; an abnormality determination unit which determines that abnormality has occurred in the subject being diagnosed using a signal from the state variation detection unit as a part of inputted signals; an alarm generation means which reports the output from the abnormality determination unit to the outside; and an erroneous report inhibition unit which detects events other than the abnormality in the plant being diagnosed and inhibits the output from the abnormality determination unit.

No. of Pages : 84 No. of Claims : 12

(12) PATENT APPLICATION PUBLICATION
(19) INDIA
(22) Date of filing of Application :24/09/2012
(21) Application No.8347/DELNP/2012 A
(43) Publication Date : 21/03/2014

(54) Title of the invention : PROCESS OF PRODUCING A CELLULOSIC FIBRE WEB

(51) International classification :D06N1/00
(31) Priority Document No :61/318,576
(32) Priority Date :29/03/2010
(33) Name of priority country :U.S.A.
(86) International Application No :PCT/EP2011/054581
Filing Date :25/03/2011
(87) International Publication No : NA
(61) Patent of Addition to Application Number :NA
Filing Date :NA
(62) Divisional to Application Number :NA
Filing Date :NA

(71)**Name of Applicant :**
1)AKZO NOBEL CHEMICALS INTERNATIONAL B.V.
Address of Applicant :Stationsstraat 77 NL-3811 MH Amersfoort The Netherlands
(72)**Name of Inventor :**
1)MALMBORG Kerstin
2)SOLHAGE Fredrik
3)ANDERSSON Arne

(57) Abstract :
The present invention relates to a process of producing a cellulosic fibre web comprising a) providing a cellulosic suspension to which a debonder system can be added b) dewatering the cellulosic suspension and forming a cellulosic fibre web and c) applying a smectite clay to said cellulosic fibre web with or without adding a polymer in an amount from about 0.01 to about 2 kg/t dry cellulosic fibres. The invention also relates to a web obtainable by the process.

No. of Pages : 18 No. of Claims : 15

(12) PATENT APPLICATION PUBLICATION
(19) INDIA
(22) Date of filing of Application :24/09/2012
(21) Application No.8348/DELNP/2012 A
(43) Publication Date : 21/03/2014

(54) Title of the invention : TREATMENT OF ORGANIC WASTE

(51) International classification :C05F1/00,C05F5/00,C05F11/00
(31) Priority Document No :1004820.5
(32) Priority Date :23/03/2010
(33) Name of priority country :U.K.
(86) International Application No:PCT/SG2011/000113
Filing Date :23/03/2011
(87) International Publication No :WO 2011/119112
(61) Patent of Addition to Application Number :NA
Filing Date :NA
(62) Divisional to Application Number :NA
Filing Date :NA

(71)**Name of Applicant :**
1)BIOMAX HOLDINGS PTE LTD
Address of Applicant :Blk 4 Kaki Bukit Ave 1 #05 07 08 Singapore 417939 Singapore
(72)**Name of Inventor :**
1)PUAH Chum Mok
2)SIM Eng Tong
3)CHUA Siok Lui

(57) Abstract :
The present invention relates to a process for treating organic waste which comprises the step of contacting an organic waste with one or more microorganisms from at least three of the following microorganism species: sp. microorganisms sp. microorganisms sp. microorganisms and sp. microorganisms the contacting being undertaken under conditions to at least partly convert the organic waste to organic fertilizer.

No. of Pages : 57 No. of Claims : 49

(12) PATENT APPLICATION PUBLICATION
(19) INDIA
(22) Date of filing of Application :24/09/2012
(21) Application No.8322/DELNP/2012 A
(43) Publication Date : 21/03/2014

(54) Title of the invention : PROCESS FOR THE PRODUCTION OF WATER AND SOLVENT FREE HALOBUTYL RUBBERS

(51) International classification :C08F6/00,C08L23/28
(31) Priority Document No :10003140.0
(32) Priority Date :24/03/2010
(33) Name of priority country :EPO
(86) International Application No :PCT/EP2011/054447
Filing Date :23/03/2011
(87) International Publication No :WO 2011/117297
(61) Patent of Addition to Application Number :NA
Filing Date :NA
(62) Divisional to Application Number :NA
Filing Date :NA

(71)**Name of Applicant :**
1)LANXESS INTERNATIONAL SA
Address of Applicant :Route Louis Braille 12 CH 1763 Granges Paccot Switzerland
(72)**Name of Inventor :**
1)KIRCHHOFF Jrg
2)FELLER Rolf
3)PAUL Hanns Ingolf
4)WIESNER Udo
5)LOVEGROVE John
6)GRONOWSKI Adam

(57) Abstract :
The present invention relates to water and solvent free halogenated butyl rubber products as a process for the production thereof. The process comprises at least the steps of: a.) treating a fluid containing at least one halogenated butyl rubber and at least one volatile compound in at least one concentrator unit b.) reheating the concentrated fluid and c.) feeding the reheated concentrated fluid into at least one extruder.

No. of Pages : 69 No. of Claims : 14

(12) PATENT APPLICATION PUBLICATION
(19) INDIA
(22) Date of filing of Application :24/09/2012
(21) Application No.8323/DELNP/2012 A
(43) Publication Date : 21/03/2014

(54) Title of the invention : METHODS FOR INHIBITING NECROSIS

(51) International classification :A61K38/00
(31) Priority Document No :61/307,647
(32) Priority Date :24/02/2010
(33) Name of priority country :U.S.A.
(86) International Application No :PCT/IL2011/000182
Filing Date :23/02/2011
(87) International Publication No :WO 2011/104708
(61) Patent of Addition to Application Number :NA
Filing Date :NA
(62) Divisional to Application Number :NA
Filing Date :NA

(71)**Name of Applicant :**
1)BEN GURION UNIVERSITY OF THE NEGEV RESEARCH AND DEVELOPMENT AUTHORITY
Address of Applicant :P. O. Box 653 84105 Beer Sheva Israel
2)MOR RESEARCH APPLICATIONS LTD.
(72)**Name of Inventor :**
1)PAROLA Abraham
2)NATHAN Ilana
3)KASHER Ron
4)LERNER YARDENI Jenny
5)COHEN Aviv

(57) Abstract :
A method of treating a patient suffering from a disease characterized by tissue necrosis by administering to the patient a necrosis inhibitor and/or a Humanin or a derivative of Humanin is provided. The invention further includes a method for prophylactically treating a patient at risk for a pathological condition that is precipitated at least in part by tissue necrosis by administering to the patient a necrosis inhibitor and/or a Humanin or a derivative of Humanin.

No. of Pages : 49 No. of Claims : 25

(12) PATENT APPLICATION PUBLICATION
(19) INDIA
(22) Date of filing of Application :28/09/2012
(21) Application No.8501/DELNP/2012 A
(43) Publication Date : 21/03/2014

(54) Title of the invention : NON INVASIVE SENSOR FOR DETERMINING FUNCTIONAL CHARACTERISTICS OF THE CORNEA DEVICE INCLUDING SAID SENSOR AND USE THEREOF

(51) International classification :A61B5/053
(31) Priority Document No :P201030307
(32) Priority Date :02/03/2010
(33) Name of priority country :Spain
(86) International Application No :PCT/ES2011/070131
Filing Date :28/02/2011
(87) International Publication No :WO 2011/107645
(61) Patent of Addition to Application Number :NA
Filing Date :NA
(62) Divisional to Application Number :NA
Filing Date :NA

(71)**Name of Applicant :**
1)CONSEJO SUPERIOR DE INVESTIGACIONES CIENT FICAS (CSIC)
Address of Applicant :Serrano 117 E 28006 Madrid Spain
2)UNIVERSIDAD DE VALLADOLID
(72)**Name of Inventor :**
1)GUIMERA BRUNET Ant³n
2)VILLA SANZ Rosa
3)GABRIEL BUGU'A Gemma
4)MALDONADO LPEZ Miguel Jos

(57) Abstract :
The invention relates to a sensor and a device including said sensor for non invasively obtaining data that can be used to determine the functional characteristics of the cornea in particular to establish a correlation between the impedance to different frequencies and the permeability of the endothelium and the epithelium and the hydration level of the stroma.

No. of Pages : 23 No. of Claims : 27

(12) PATENT APPLICATION PUBLICATION
(19) INDIA
(22) Date of filing of Application :28/09/2012
(21) Application No.8503/DELNP/2012 A
(43) Publication Date : 21/03/2014

(54) Title of the invention : RECTIFIER AND INVERTER BASED TORSIONAL MODE DAMPING SYSTEM AND METHOD

(51) International classification :H02P21/13,H02P21/05,H02P21/14
(31) Priority Document No :CO2010A000011
(32) Priority Date :01/04/2010
(33) Name of priority country :Italy
(86) International Application No :PCT/EP2011/054948
Filing Date :30/03/2011
(87) International Publication No :WO 2011/121041
(61) Patent of Addition to Application Number :NA
Filing Date :NA
(62) Divisional to Application Number :NA
Filing Date :NA

(71)**Name of Applicant :**
1)NUOVO PIGNONE S.P.A.
Address of Applicant :Via Felice Matteucci 2 I 50127 Florence Italy
(72)**Name of Inventor :**
1)SCHRAMM Simon Herbert
2)SIHLER Christof Martin
3)ACHILLES Alfredo Sebastian
4)ROTONDO Paola

(57) Abstract :
A torsional mode damping controller system is connected to a converter that drives a drive train including an electrical machine and a non electrical machine. The controller system includes an input interface configured to receive measured data related to variables of the converter or the drive train and a controller connected to the input interface. The controller is configured to calculate at least one dynamic torque component along a section of a shaft of the drive train based on the measured data from the input interface generate control data for a rectifier and an inverter of the converter for damping a torsional oscillation in the shaft of the drive train based on the at least one dynamic torque component and send the control data to the rectifier and to the inverter for modulating an active power exchanged between the converter and the electrical machine.

No. of Pages : 39 No. of Claims : 10

(12) PATENT APPLICATION PUBLICATION
(19) INDIA
(22) Date of filing of Application :28/09/2012
(21) Application No.8504/DELNP/2012 A
(43) Publication Date : 21/03/2014

(54) Title of the invention : RECTIFIER BASED TORSIONAL MODE DAMPING SYSTEM AND METHOD

(51) International classification :H02P21/13,H02P21/14,H02P23/04
(31) Priority Document No :CO2010A000012
(32) Priority Date :01/04/2010
(33) Name of priority country :Italy
(86) International Application No :PCT/EP2011/054951
Filing Date :30/03/2011
(87) International Publication No :WO 2011/121043
(61) Patent of Addition to Application Number :NA
Filing Date :NA
(62) Divisional to Application Number :NA
Filing Date :NA

(71)**Name of Applicant :**
1)NUOVO PIGNONE S.p.A.
Address of Applicant :Via Felice Matteucci 2 I 50127 Florence Italy
(72)**Name of Inventor :**
1)SCHRAMM Simon Herbert
2)SIHLER Christof Martin
3)ACHILLES Alfredo Sebastian
4)ROTONDO Paola

(57) Abstract :
A torsional mode damping controller system connected to a converter that drives a drive train including an electrical machine and a non electrical machine. The controller system includes an input interface configured to receive measured data related to variables of the converter or the drive train and a controller connected to the input interface. The controller is configured to calculate at least one dynamic torque component along a section of a shaft of the drive train based on the measured data from the input interface generate control data for a rectifier of the converter for damping a torsional oscillation in the shaft of the drive train based on the at least one dynamic torque component and send the control data to the rectifier for modulating an active power exchanged between the converter and the electrical machine.

No. of Pages : 39 No. of Claims : 10

(12) PATENT APPLICATION PUBLICATION
(19) INDIA
(22) Date of filing of Application :25/09/2012
(21) Application No.8381/DELNP/2012 A
(43) Publication Date : 21/03/2014

(54) Title of the invention : METHOD AND APPARATUS FOR AUTHENTICATED ENCRYPTION OF AUDIO

(51) International classification :H04L9/00
(31) Priority Document No :NA
(32) Priority Date :NA
(33) Name of priority country :NA
(86) International Application No :PCT/EP2010/054317
Filing Date :31/03/2010
(87) International Publication No :WO 2011/120573
(61) Patent of Addition to Application Number :NA
Filing Date :NA
(62) Divisional to Application Number :NA
Filing Date :NA

(71)**Name of Applicant :**
1)ROBERT BOSCH GMBH
Address of Applicant :Postfach 30 02 20 70442 Stuttgart Germany
(72)**Name of Inventor :**
1)SMAAK Marc
2)SCHUETZE Torsten
3)NEWSOME James
4)TIENEN Stephan van

(57) Abstract :
The invention provides for a method of encoding data and a method for decoding encrypted and authenticity protected data. Furthermore the invention provides for an encoding and a decoding equipment. For encoding the data is encrypted by using AES encryption (16 52) and authenticity protected by calculating a CMAC algorithm (26) over the data.

No. of Pages : 12 No. of Claims : 10

(12) PATENT APPLICATION PUBLICATION
(19) INDIA
(22) Date of filing of Application :25/09/2012
(21) Application No.8382/DELNP/2012 A
(43) Publication Date : 21/03/2014

(54) Title of the invention : NOVEL ALLERGEN

(51) International classification :C07K14/47,A61K39/35,A61P37/08
(31) Priority Document No :1050406-6
(32) Priority Date :23/04/2010
(33) Name of priority country :Sweden
(86) International Application No :PCT/SE2011/050503
Filing Date :26/04/2011
(87) International Publication No :WO 2011/133105
(61) Patent of Addition to Application Number :NA
Filing Date :NA
(62) Divisional to Application Number :NA
Filing Date :NA

(71)**Name of Applicant :**
1)Phadia AB
Address of Applicant :Box 6460 S 751 37 Uppsala Sweden
(72)**Name of Inventor :**
1)Mattsson Lars
2)Lidholm Jonas
3)Lundgren Thomas

(57) Abstract :
An isolated horse allergen is disclosed which is a secretoglobin having a molecular weight of 15 kDa under non reducing conditions and comprising a first peptide chain having a molecular weight of about 5 kDa and a second peptide chain having a molecular weight of about 10 kDa linked together and variants and fragments thereof sharing epitopes for antibodies therewith. The use of the allergen in diagnosis and therapy is also disclosed as well as a diagnostic kit and a pharmaceutical composition containing the allergen.

No. of Pages : 52 No. of Claims : 20

(12) PATENT APPLICATION PUBLICATION
(19) INDIA
(22) Date of filing of Application :25/09/2012
(21) Application No.8383/DELNP/2012 A
(43) Publication Date : 21/03/2014

(54) Title of the invention : MANUAL BIDET

(51) International classification :E03D9/08
(31) Priority Document No :NA
(32) Priority Date :NA
(33) Name of priority country :NA
(86) International Application No :PCT/CN2011/081146
Filing Date :21/10/2011
(87) International Publication No :WO 2013/056471
(61) Patent of Addition to Application Number :NA
Filing Date :NA
(62) Divisional to Application Number :NA
Filing Date :NA

(71)**Name of Applicant :**
1)KOHLER CO.
Address of Applicant :444 Highland Drive Kohler Wisconsin 53044 U.S.A.
(72)**Name of Inventor :**
1)BICKERSTAFFE Mark S.
2)CHENESSEAU Bruno J.
3)ZUNQING ZANG.
4)YUAN Ziyi
5)TEUBERT John A.

(57) Abstract :
According to an exemplary embodiment a bidet assembly for a toilet generally includes a sprayer a water supply system and an arm. The sprayer is configured to spray water. The water supply system is configured to selectively communicate water from one or more water sources to the sprayer. The arm is operationally coupled to the water sprayer and the water supply system. The arm is configured such that rotation of the arm acts to rotate the sprayer and the arm forger comprises a feature configured to allow control of the amount of water flow from the water supply to the sprayer.

No. of Pages : 21 No. of Claims : 18

(12) PATENT APPLICATION PUBLICATION
(19) INDIA
(22) Date of filing of Application :27/09/2012
(21) Application No.8463/DELNP/2012 A
(43) Publication Date : 21/03/2014

(54) Title of the invention : CIRCUIT ARRANGEMENT AND METHOD FOR DIVIDING IMPULSIONS IN A TIME INTERVAL

(51) International classification :G06F7/68
(31) Priority Document No :10 2010 003 542.4
(32) Priority Date :31/03/2010
(33) Name of priority country :Germany
(86) International Application No :PCT/EP2011/053979
Filing Date :16/03/2011
(87) International Publication No :WO 2011/120807
(61) Patent of Addition to Application Number :NA
Filing Date :NA
(62) Divisional to Application Number :NA
Filing Date :NA

(71)**Name of Applicant :**
1)ROBERT BOSCH GMBH
Address of Applicant :Postfach 30 02 20 70442 Stuttgart Germany
(72)**Name of Inventor :**
1)BOEHL Eberhard
2)PAWLOK Bernard

(57) Abstract :
The invention relates to a circuit arrangement for generating impulsions in a time interval based on an input signal. Said circuit arrangement comprises a counter unit a comparison unit and a first adding unit (10) and the time interval is predicted based on at least two changers in the defined input signal. According to the invention the circuit arrangement is configured such that it is triggered at the beginning of the time interval by means of the first adding unit (10) based on clock impulsions and impulsions are generated and emitted the number of generated and emitted impulsions are counted by means of a counting unit the counted number is compared to the desired value by means of the comparison unit and the generation and emission of the impulsions ends when the desired value is attained or when the time interval has ended; the first counting unit (10) receives as a first input variable a sum obtained from the first counting unit (10) during a prior clocked impulsion and as a second input variable at least one calculated data value and when calculating the data value a difference in the number of impulsions emitted during a prior time interval and the desired value and/or the systematic differences are taken into account. The invention also relates to a corresponding method.

No. of Pages : 13 No. of Claims : 10

(12) PATENT APPLICATION PUBLICATION
(19) INDIA
(22) Date of filing of Application :27/09/2012
(21) Application No.8464/DELNP/2012 A
(43) Publication Date : 21/03/2014

(54) Title of the invention : 4 AMINOPYRIMIDINE DERIVATIVES AND THEIR AS AS ADENOSINE A2A RECEPTOR ANTAGONISTS

(51) International classification	:C07D403/04,C07D403/14,C07D409/14
(31) Priority Document No	:201030489
(32) Priority Date	:31/03/2010
(33) Name of priority country	:Spain
(86) International Application No	:PCT/IB2011/000664
Filing Date	:29/03/2011
(87) International Publication No	:WO 2011/121418
(61) Patent of Addition to Application Number	:NA
Filing Date	:NA
(62) Divisional to Application Number	:NA
Filing Date	:NA

(71)**Name of Applicant :**
1)PALOBIOFARMA S.L.
Address of Applicant :C/ Porvenir 42 Pol.Ind.Sur Sector F E 08450 Llinars Del Valls Barcelone Spain
(72)**Name of Inventor :**
1)CAMACHO GOMEZ Juan Alberto
2)CASTRO PALOMINO LARIA Julio Cesar

(57) Abstract :
New 4 amino pyrimidine derivatives as potent antagonists of the adenosine A receptor formula (I): (I) The invention provides as well a method for preparing such compounds pharmaceutical compositions comprising an effective amount of these compounds and the use of such compounds in the manufacture of a medicament to treat pathological affections that can be improved by antagonism of the adenosine A receptor.

No. of Pages : 54 No. of Claims : 27

(12) PATENT APPLICATION PUBLICATION
(19) INDIA
(22) Date of filing of Application :25/09/2012
(21) Application No.8368/DELNP/2012 A
(43) Publication Date : 21/03/2014

(54) Title of the invention : LEAD STORAGE BATTERY

(51) International classification :H01M10/06,H01M2/16,H01M4/14
(31) Priority Document No :2010-044212
(32) Priority Date :01/03/2010
(33) Name of priority country :Japan
(86) International Application No :PCT/JP2010/007567
Filing Date :27/12/2010
(87) International Publication No :WO 2011/108056
(61) Patent of Addition to Application Number :NA
Filing Date :NA
(62) Divisional to Application Number :NA
Filing Date :NA

(71)**Name of Applicant :**
1)SHIN KOBE ELECTRIC MACHINERY CO. LTD.
Address of Applicant :8 1 Akashi cho Chuo ku Tokyo 1040044 Japan
(72)**Name of Inventor :**
1)MINOURA Satoshi
2)SHIBAHARA Toshio
3)SAKAI Masanori
4)KOGURE Koji

(57) Abstract :
The disclosed liquid lead storage battery which is charged intermittently for short periods at a time and which performs high rate discharge to a load while in a partially charged state has increased operating life characteristics and charge acceptance by means of using: a cathode plate wherein the specific surface area of active material is at least 6 m/g; an anode plate wherein a carbonaceous conductive material and a bisphenol/aminobenzenesulfonic acid/formaldehyde condensate are added to an anode active material increasing charge acceptance and operating life performance; and a separator of which the surface that faces the anode plate is formed from a nonwoven fabric of a material selected from glass pulp and a polyolefin.

No. of Pages : 58 No. of Claims : 4

(12) PATENT APPLICATION PUBLICATION
(19) INDIA
(22) Date of filing of Application :25/09/2012
(21) Application No.8369/DELNP/2012 A
(43) Publication Date : 21/03/2014

(54) Title of the invention : SUBSTITUTED AZA BICYCLIC IMIDAZOLE DERIVATIVES USEFUL AS TRPM8 RECEPTOR MODULATORS

(51) International classification :C07D471/04,C07D473/00,C07D487/04
(31) Priority Document No :61/310,870
(32) Priority Date :05/03/2010
(33) Name of priority country :U.S.A.
(86) International Application No :PCT/US2011/026974
Filing Date :03/03/2011
(87) International Publication No :WO 2011/109587
(61) Patent of Addition to Application Number :NA
Filing Date :NA
(62) Divisional to Application Number :NA
Filing Date :NA

(71)**Name of Applicant :**
1)JANSSEN PHARMACEUTICA NV
Address of Applicant :Turnhoutseweg 30 B2340 Beerse Belgium
(72)**Name of Inventor :**
1)PLAYER Mark R.
2)CALVO Raul
3)CHEN Jinsheng
4)MEEGALLA Sanath
5)PARKS Daniel
6)PARSONS William
7)BALLENTINE Scott
8)BRANUM Shawn

(57) Abstract :
The present invention is directed to substituted aza bicyclic imidazole derivatives pharmaceutical compositions containing them and their use in the treatment of disorders and conditions modulated by TRP M8 including for example inflammatory pain inflammatory hyperalgesia inflammatory hypersensitivity condition neuropathic pain neuropathic cold allodynia inflammatory somatic hyperalgesia inflammatory visceral hyperalgesia cardiovascular disease aggravated by cold and pulmonary disease aggravated by cold.

No. of Pages : 230 No. of Claims : 35

(12) PATENT APPLICATION PUBLICATION
(19) INDIA
(22) Date of filing of Application :25/09/2012
(21) Application No.8370/DELNP/2012 A
(43) Publication Date : 21/03/2014

(54) Title of the invention : LEAD STORAGE BATTERY

(51) International classification :H01M10/06,H01M2/16,H01M4/14
(31) Priority Document No :2010-044854
(32) Priority Date :02/03/2010
(33) Name of priority country :Japan
(86) International Application No :PCT/JP2011/000058
Filing Date :07/01/2011
(87) International Publication No :WO 2011/108175
(61) Patent of Addition to Application Number :NA
Filing Date :NA
(62) Divisional to Application Number :NA
Filing Date :NA

(71)**Name of Applicant :**
1)SHIN KOBE ELECTRIC MACHINERY CO. LTD.
Address of Applicant :8 1 Akashi cho Chuo ku Tokyo 1040044 Japan
(72)**Name of Inventor :**
1)MINOURA Satoshi
2)SAKAI Masanori
3)KOBAYASHI Shinsuke
4)KOGURE Koji

(57) Abstract :
Disclosed is a liquid lead storage battery which is charged intermittently for short periods at a time and which performs high rate discharge to a load while in a partially charged state which uses a cathode plate of which the utilization rate of a cathode active material is in the range of 50 65% and an anode plate wherein a carbonaceous conductor and a bisphenol/aminobenzenesulfonic acid/formaldehyde condensate are added to an anode active material and that has increased charge acceptance and operating life characteristics; and charge acceptance and operating life characteristics under PSOC are caused to be greater than conventionally by means of using as a separator that which has a surface that faces the anode plate formed from a non woven fabric of a material selected from glass pulp and a polyolefin.

No. of Pages : 64 No. of Claims : 4

(12) PATENT APPLICATION PUBLICATION
(19) INDIA
(22) Date of filing of Application :25/09/2012
(21) Application No.8393/DELNP/2012 A
(43) Publication Date : 21/03/2014

(54) Title of the invention : RECEPTION DEVICE FOR DIGITAL SIGNAL INCLUDING STATION SELECTION AUXILIARY INFORMATION AND RECEPTION METHOD SENDING DEVICE SENDING METHOD AND PROGRAM

(51) International classification	:H04N7/173,H04H20/61,H04H60/13
(31) Priority Document No	:2010079182
(32) Priority Date	:30/03/2010
(33) Name of priority country	:Japan
(86) International Application No	:PCT/JP2011/056106
Filing Date	:15/03/2011
(87) International Publication No	:WO 2011/122334
(61) Patent of Addition to Application Number	:NA
Filing Date	:NA
(62) Divisional to Application Number	:NA
Filing Date	:NA

(71)**Name of Applicant :**
1)SONY CORPORATION
Address of Applicant :1 7 1 Konan Minato ku Tokyo 1080075 Japan
(72)**Name of Inventor :**
1)KITAZATO Naohisa
2)HATAKEYAMA Izumi
3)OBAYASHI Masayuki

(57) Abstract :
Disclosed is a reception device for a digital signal including station selection auxiliary information that quickly presents a receivable one segment broadcast. Also disclosed are a reception method a sending device a sending method and a program. Station information acquisition units (111 to 113) acquire station information related to stations including at least broadcast area information which is information about a broadcast area that can receive broadcast waves from a station that sends broadcast waves of arbitrary one segment broadcasts in arbitrary segments. A station selection unit (117) selects as a selectable station a one segment broadcast station that can be received at a predetermined location using the broadcast area information and a station selection control unit (118) controls station selection to select the one segment broadcast of the selectable station. This can be applied for example to a portable one segment broadcast reception terminal or the like.

No. of Pages : 149 No. of Claims : 14

(12) PATENT APPLICATION PUBLICATION
(19) INDIA
(22) Date of filing of Application :12/01/2013
(21) Application No.116/MUMNP/2013 A
(43) Publication Date : 21/03/2014

(54) Title of the invention : SYSTEMS OF INFLUENCING SHOPPER S PRODUCT SELECTION AT THE FIRST MOMENT OF TRUTH BASED UPON A SHOPPER S LOCATION IN A RETAIL ESTABLISHMENT

(51) International classification	:H04L12/56, G06Q30/00
(31) Priority Document No	:12/837465
(32) Priority Date	:15/07/2010
(33) Name of priority country	:U.S.A.
(86) International Application No	:PCT/US2011/044000
Filing Date	:14/07/2011
(87) International Publication No	:WO 2012/009532
(61) Patent of Addition to Application Number	:NA
Filing Date	:NA
(62) Divisional to Application Number	:NA
Filing Date	:NA

(71)**Name of Applicant :**
1)SUNRISE R & D HOLDINGS LLC
Address of Applicant :1014 Vine Street Cincinnati Ohio 45202 U.S.A.
(72)**Name of Inventor :**
1)BONNER Brett Bracewell
2)HJELM Christopher Todd
3)JONES Titus Arthur
4)OSBORNE John Edward II
5)PERKINS Dion Brent
6)MENZ Gregory Michael

(57) Abstract :
Provided herein is a system or systems for influencing shoppers while they consider making purchasing decisions in a retail establishment. Specifically, the method identifies the first moment of truth and attempts to influence shoppers during a shoppers first moment of truth based on the shoppers location within the retail establishment. The method transmits an acceptable influential message and transmits the message through a communication network to a shopper tracking device, which is in close proximity to a shopper during a shopping trip throughout a retail establishment.

No. of Pages : 75 No. of Claims : 20

(12) PATENT APPLICATION PUBLICATION
(19) INDIA
(22) Date of filing of Application :22/11/2012
(21) Application No.2604/MUMNP/2012 A
(43) Publication Date : 21/03/2014

(54) Title of the invention : FUEL CELL SYSTEM AND CONTROL METHOD THEREFOR

(51) International classification :H01M 8/04
(31) Priority Document No :2010-119448
(32) Priority Date :25/05/2010
(33) Name of priority country :Japan
(86) International Application No :PCT/IB2011/001478
Filing Date :25/05/2011
(87) International Publication No :WO/2011/148265
(61) Patent of Addition to Application Number :NA
Filing Date :NA
(62) Divisional to Application Number :NA
Filing Date :NA

(71)**Name of Applicant :**
1)TOYOTA JIDOSHA KABUSHIKI KAISHA
Address of Applicant :1 Toyota-cho Toyota-shi Aichi-ken 471-8571 Japan
(72)**Name of Inventor :**
1)KAWAHARA Shuya
2)KATO Manabu
3)KUMEI Hideyuki

(57) Abstract :
A fuel cell system and a control method therefor are provided. The fuel cell system (100) includes: a fuel cell (10) formed of a plurality of stacked power generating elements (11); a cell voltage measuring unit (91) detecting negative voltage in any one of the power generating elements (11); a control unit (20) controlling electric power output from the fuel cell (10); and an accumulated current value measuring unit (21) measuring an accumulated current value obtained by time integration of current output from the fuel cell. The control unit (20) prestores a correlation between accumulated current values and current densities that are allowable for the fuel cell (10) in a period during which negative voltage is generated. When negative voltage has been detected, the control unit (20) executes output restricting process of restricting electric power output from the fuel cell (10) so as to fall within an operation allowable range defined by the accumulated current values and current densities of the correlation.

No. of Pages : 88 No. of Claims : 20

(12) PATENT APPLICATION PUBLICATION
(19) INDIA
(22) Date of filing of Application :22/11/2012
(21) Application No.2605/MUMNP/2012 A
(43) Publication Date : 21/03/2014

(54) Title of the invention : STEAM TURBINE POWER PLANT AND OPERATION METHOD FOR STEAM TURBINE

(51) International classification :F01D25/24,F01K7/22
(31) Priority Document No :2010271831
(32) Priority Date :06/12/2010
(33) Name of priority country :Japan
(86) International Application No :PCT/JP2011/061110
Filing Date :13/05/2011
(87) International Publication No :WO 2012/077371
(61) Patent of Addition to Application Number :NA
Filing Date :NA
(62) Divisional to Application Number :NA
Filing Date :NA

(71)**Name of Applicant :**
1)MITSUBISHI HEAVY INDUSTRIES LTD.
Address of Applicant :16 5 Konan 2 chome Minato ku Tokyo 1088215 Japan
(72)**Name of Inventor :**
1)MARUYAMA Takashi

(57) Abstract :
Provided is a steam turbine (1) comprising: a single flow high and intermediate pressure turbine (2); a single flow intermediate pressure turbine (4); and a steam path (6) that guides part of the steam to the intermediate pressure turbine (4) at a point part way through the high pressure turbine (2). The high and intermediate pressure turbine (2) has a high pressure section (2A) on the steam inlet side and an intermediate pressure section (2B) on the steam outlet side. The steam path (6) is configured so as to guide part of the steam that has passed through the high pressure section (2A) to the intermediate pressure turbine (4) from a position between the high pressure section (2A) and the intermediate pressure section (2B) in the high and intermediate pressure turbine (2).

No. of Pages : 56 No. of Claims : 8

(12) PATENT APPLICATION PUBLICATION
(19) INDIA
(22) Date of filing of Application :22/11/2012
(21) Application No.2608/MUMNP/2012 A
(43) Publication Date : 21/03/2014

(54) Title of the invention : KNEADING DEVICE

(51) International classification :B29B7/24
(31) Priority Document No :2011031430
(32) Priority Date :16/02/2011
(33) Name of priority country :Japan
(86) International Application No :PCT/JP2011/060553
Filing Date :02/05/2011
(87) International Publication No :WO 2012/111178
(61) Patent of Addition to Application Number :NA
Filing Date :NA
(62) Divisional to Application Number :NA
Filing Date :NA

(71)**Name of Applicant :**
1)MITSUBISHI HEAVY INDUSTRIES LTD.
Address of Applicant :16 5 Konan 2 chome Minato ku Tokyo 1088215 Japan
(72)**Name of Inventor :**
1)TATEMI Hiroki
2)MORITA Mitsuru
3)HANADA Shuichi
4)MORIBE Takashi
5)TAKAHASHI Kazuhito
6)NISHIHARA Yoshikazu
7)URAKAMI Yoshihito

(57) Abstract :
Provided is a kneading device configured so that independent of the movement of a floating weight and other operating conditions a hydraulic cylinder is operated smoothly and damage to the hydraulic cylinder is prevented. The present kneading device (1) is provided with: a body section (12) having a kneading chamber (5) therein; a floating weight (15) for pressing a material within the kneading chamber (5); a shaft member (14) having one end affixed to the floating weight (15) and capable of moving in the axial direction; a connecting beam (7) connected at the intermediate section thereof to the other end side of the shaft member (14); a cylinder (3) for moving the connecting beam (7) in the direction of the axis of the shaft member (14) the cylinder (3) being connected on one end side thereof to the end section side of the connecting beam (7) and also being connected on the other end side thereof to the body section (12); and a first connection section (9) provided at the portion of the connection between the connecting beam (7) and the cylinder (3) and capable of rotating the cylinder (3) at the connection portion about at least two axes.

No. of Pages : 23 No. of Claims : 3

(12) PATENT APPLICATION PUBLICATION
(19) INDIA
(22) Date of filing of Application :14/09/2012
(21) Application No.2680/MUM/2012 A
(43) Publication Date : 21/03/2014

(54) Title of the invention : RACEWAY BASED STEERING ACTUATION AND LINKAGE MECHANISM FOR STEERING OF MULTI-AXLE SEMI-TRAILER

(51) International classification :B62D13/04
(31) Priority Document No :NA
(32) Priority Date :NA
(33) Name of priority country :NA
(86) International Application No :NA
Filing Date :NA
(87) International Publication No :N/A
(61) Patent of Addition to Application Number :NA
Filing Date :NA
(62) Divisional to Application Number :NA
Filing Date :NA

(71)**Name of Applicant :**
1)DIRECTOR GENERAL, DEFENCE RESEARCH & DEVELOPMENT ORGANIZATION(DRDO)
Address of Applicant :MINISTRY OF DEFENCE, GOVERNMENT OF INDIA, ROOM NO.348,B-WING, DRDO BHAVAN, RAJAJI MARG, NEW DELHI,110 105, INDIA.
(72)**Name of Inventor :**
1)CHAUDHURI SANJAY
2)SAINI VIKRAM
3)SINGH MANMOHAN

(57) Abstract :
Steering actuation/linkage mechanism for a multi-axle semi-trailer coupled to a prime mover, said mechanism comprising, a drive shaft housing (1) coupled to a drive shaft (2) by side rollers (8), rigidly attached to a turn-table (14) with steering wedge (W); said drive shaft (2) slidable inside said housing; side rollers (8) assembled on said drive shaft (2) through a centre pin (5) engaged through a centre roller (7) to a raceway (6), bolted to gooseneck structure (GS) on which butterfly housing (3) with a main body (18) and cylinder mounting brackets (19) is pivoted, to be coupled to centre pin through a driven shaft (4) and hydraulic actuation cylinders (9); said driven shaft (4) slidable inside said butterfly housing, wherein profile of raceway (6) is configured to control the cut-off limits of said steering actuation mechanism and to generate a linear relationship between the articulation angle of the prime mover and different strokes of said hydraulic actuation cylinders.

No. of Pages : 29 No. of Claims : 10

(12) PATENT APPLICATION PUBLICATION
(19) INDIA
(22) Date of filing of Application :14/09/2012
(21) Application No.2683/MUM/2012 A
(43) Publication Date : 21/03/2014

(54) Title of the invention : A CIRCULAR KNITTING MACHINE WITH A FINE GAUGE

(51) International classification	:D04B27/04, D04B15/78
(31) Priority Document No	:NA
(32) Priority Date	:NA
(33) Name of priority country	:NA
(86) International Application No	:NA
Filing Date	:NA
(87) International Publication No	:N/A
(61) Patent of Addition to Application Number	:NA
Filing Date	:NA
(62) Divisional to Application Number	:NA
Filing Date	:NA

(71)**Name of Applicant :**
1)PAI LUNG MACHINERY MILL CO., LTD.
Address of Applicant :NO.8, TING-PING RD.,RUIFANG DISTRICT, NEW TAIPEI CITY, TAIWAN
(72)**Name of Inventor :**
1)TIEH-HSIUNG PAI

(57) Abstract :
A circular knitting machine with a fine gauge includes a circular cylinder (10) and a sinker holder (20) annularly located on an outer side of the circular cylinder (10). The circular cylinder (10) has a plurality of knitting needles (12) parallel with the axial direction (A) of the circular cylinder (10) to move alternately, and an annular top surface (13) corresponding to the knitting needles (12). The sinker holder (20) has a plurality of retaining slots (21) to hold a plurality of sinkers (22). Each sinker (22) has a slide edge (221), a movement edge (222) extended from the slide edge (221) at the same elevation to the annular top surface (13) and located above the annular top surface (13), and a loop forming nose (223) located between two neighboring knitting needles (12). Each retaining slot (21) has a leaning surface (211) in contact with the slide edge (221) to allow the sinker (22) to move towards the annular top surface (13) to proceed a loop forming movement.

No. of Pages : 20 No. of Claims : 10

(12) PATENT APPLICATION PUBLICATION
(19) INDIA
(22) Date of filing of Application :14/09/2012
(21) Application No.2685/MUM/2012 A
(43) Publication Date : 21/03/2014

(54) Title of the invention : WALL CONTROL CIRCUIT AND CONTROL METHOD FOR A MOTOR CELLING FAN

(51) International classification :G05B19/042
(31) Priority Document No :NA
(32) Priority Date :NA
(33) Name of priority country :NA
(86) International Application No :NA
Filing Date :NA
(87) International Publication No :N/A
(61) Patent of Addition to Application Number :NA
Filing Date :NA
(62) Divisional to Application Number :NA
Filing Date :NA

(71)**Name of Applicant :**
1)SYSTEM GENERAL CORPORATION
Address of Applicant :3F,NO. 1, ALLEY 8,LANE 45 BAO SHING ROAD, SHINDIAN DIST, NEW TAIPEI CITY, TAIWAN(R.O.C.)
(72)**Name of Inventor :**
1)TA-YUNG YANG
2)YUNG-SHENG WU
3)YI-CHI LIN
4)ZONG-ZHI CHEN

(57) Abstract :
A power management interface is provided and includes a switch, a transmitting circuit, and a receiving circuit. The switch is coupled to an AC power line for controlling a power line signal to a load. The transmitting circuit generates a switching signal in accordance with a transmitting-data to control the switch and achieve a phase modulation to the power line signal. The receiving circuit is coupled to receive the power line signal for detecting a phase of the power line signal and generating a receiving-data to control power of the load. The receiving-data is generated in response to the phase detection of the power line signal and correlated to the transmitting-data.

No. of Pages : 18 No. of Claims : 12

(12) PATENT APPLICATION PUBLICATION
(19) INDIA
(22) Date of filing of Application :27/09/2012
(21) Application No.2819/MUM/2012 A
(43) Publication Date : 21/03/2014

(54) Title of the invention : MANAGEMENT OF CONTACTS AT CONTACT CENTERS

(51) International classification	:G06F17/30, G06Q10/06
(31) Priority Document No	:13/450,820
(32) Priority Date	:19/04/2012
(33) Name of priority country	:U.S.A.
(86) International Application No	:NA
Filing Date	:NA
(87) International Publication No	: NA
(61) Patent of Addition to Application Number	:NA
Filing Date	:NA
(62) Divisional to Application Number	:NA
Filing Date	:NA

(71)**Name of Applicant :**
1)AVAYA INC
Address of Applicant :211, MOUNT AIRY ROAD BASKING RIDGE NEW JERSEY 07920 U.S.A.
(72)**Name of Inventor :**
1)MICHAEL HARTMAN
2)NEIL O'CONNOR
3)TONY MCCORMACK
4)THOMAS HOWLEY

(57) Abstract :
In a contact center, a new contact is compared with other contacts which are currently active at the contact center to identify a matching contact having a common source with the new contact, following which at least one of the new and matching contacts is terminated or provided with increased resources or higher priority according to contact center rules.

No. of Pages : 38 No. of Claims : 15

(12) PATENT APPLICATION PUBLICATION
(19) INDIA
(22) Date of filing of Application :22/11/2012
(21) Application No.2610/MUMNP/2012 A
(43) Publication Date : 21/03/2014

(54) Title of the invention : MODULE FOR A THERMAL ABSORBER OF A SOLAR RECEIVER ABSORBER COMPRISING AT LEAST ONE SUCH MODULE AND RECEIVER COMPRISING AT LEAST ONE SUCH ABSORBER

(51) International classification :F24J2/07,F24J2/10,F28F13/12
(31) Priority Document No :10 54067
(32) Priority Date :27/05/2010
(33) Name of priority country :France
(86) International Application No :PCT/EP2011/058568
Filing Date :25/05/2011
(87) International Publication No :WO 2011/147874
(61) Patent of Addition to Application Number :NA
Filing Date :NA
(62) Divisional to Application Number :NA
Filing Date :NA

(71)**Name of Applicant :**
1)COMMISSARIAT LENERGIE ATOMIQUE ET AUX ENERGIES ALTERNATIVES
Address of Applicant :25 rue Leblanc Btiment Le Ponant D F 75015 Paris France
(72)**Name of Inventor :**
1)FOURMIGUE Jean Fran§ois
2)BRUCH Arnaud
3)CIGNA Julien
4)COUTURIER Rapha«l
5)ROUX Guilhem

(57) Abstract :
The invention relates to an absorber (6) for a solar receiver comprising a housing (12) having a longitudinal axis (X) including a first longitudinal end (18.1) a supply collector (20) for supplying a heat transfer fluid to a second longitudinal end (18.2) a discharge collector (22) for discharging said fluid the housing comprising a first wall (14.1) provided with a surface (6.1) to be exposed to a luminous flux (F) a second wall (14.2) facing the first wall side walls (16.1 16.2) connecting said first (14.1) and second walls (14.2) said housing (12) comprising a means (28) which rigidly connects the first and second wall and is formed by at least one longitudinally extending rib (30) attached to the first (14.1) and to the second (14.2) wall said rib (30) comprising the windows (32) and the deflectors (34) associated with the windows (32) said deflectors (34) requiring a portion of the fluid to pass through said windows (32) causing a remixing of the fluid.

No. of Pages : 33 No. of Claims : 21

(12) PATENT APPLICATION PUBLICATION
(19) INDIA
(22) Date of filing of Application :20/02/2012
(21) Application No.453/MUM/2012 A
(43) Publication Date : 21/03/2014

(54) Title of the invention : PROCESS FOR ISOLATION OF ANTICANCER AGENT A NEW ISOFLAVONE FROM SALACIA RETICULATA.

(51) International classification	:C07H 15/00
(31) Priority Document No	:NA
(32) Priority Date	:NA
(33) Name of priority country	:NA
(86) International Application No	:NA
Filing Date	:NA
(87) International Publication No	:N/A
(61) Patent of Addition to Application Number	:NA
Filing Date	:NA
(62) Divisional to Application Number	:NA
Filing Date	:NA

(71)**Name of Applicant :**
1)DR. DURAGKAR NANDAKISHORE JEEVANRAO
Address of Applicant :PLOT NO.45, SHANKAR NAGAR, NAGPUR-440 010 Maharashtra India
(72)**Name of Inventor :**
1)DR. DURAGKAR NANDAKISHORE JEEVANRAO
2)DR. BHUSARI KISHOR PANDURANG
3)KATOLKAR PARIMAL PRADIPKUMAR

(57) Abstract :
The present invention provides the process for the isolation of new alkaloid from the root of Salacia reticulata. The process comprises drying, grinding, and hot defatting of S. reticulata root with petroleum ether. This is followed by the successive sequential hot extraction with the solvents viz; ethyl acetate, acetone, methanol and hydroalcohol. The solvents are then removed under vacuum preferably at a temperature in the range of 35-40 C. The hydroalcoholic crude extract obtained thereby is then subjected to column chromatography in chronological order of polarity of solvent starting with petroleum ether. The acetone fraction showing similar pattern in TLC are mixed together and concentrated in vacuum under reduced pressure to get light brown colour new alkaloid. The crystal is washed to free form any adhere impurities. The crystals are dried and subjected to identification by spectrophotometric methods such as UV, IR, NMR and Mass. The isolated, purified and characterized new alkaloid is subjected to MTT Assay and Capsase-3 activity using cancerous cell line shows potent anticancer activity.

No. of Pages : 15 No. of Claims : 7

(12) PATENT APPLICATION PUBLICATION
(19) INDIA
(22) Date of filing of Application :20/02/2012
(21) Application No.454/MUM/2012 A
(43) Publication Date : 21/03/2014

(54) Title of the invention : PISTON AND PISTON RINGS ASSEMBLY

(51) International classification	:C07H 15/00
(31) Priority Document No	:NA
(32) Priority Date	:NA
(33) Name of priority country	:NA
(86) International Application No	:NA
Filing Date	:NA
(87) International Publication No	:N/A
(61) Patent of Addition to Application Number	:NA
Filing Date	:NA
(62) Divisional to Application Number	:NA
Filing Date	:NA

(71)**Name of Applicant :**
1)BARAD DEVAYATBHAI KARSHANBHAI
Address of Applicant :BAJRANG DAIRY FARM, KRISHNA PALACE APARTMENT, SAIBABA SOCIETY, B/H. BUS STAND, JUNAGADH SAURASHTRA, GUJARAT, INDIA.
(72)**Name of Inventor :**
1)BARAD DEVAYATBHAI KARSHANBHAI

(57) Abstract :
Piston and Piston Rings Assembly is consists with three Compression ring (1, 2 & 3), liners and internal combustion cylindrical chamber wherein the smaller diameter compression ring (1) is fitted into cylinder of the internal combustion engine; the bigger diameter [compared to diameter of compression ring (1)] compression ring (2 & 3) are fitted on both sides of compression ring (1) into the cylinder of the Internal combustion engine.

No. of Pages : 10 No. of Claims : 2

(12) PATENT APPLICATION PUBLICATION
(19) INDIA
(22) Date of filing of Application :20/02/2012
(21) Application No.455/MUM/2012 A
(43) Publication Date : 21/03/2014

(54) Title of the invention : ISOLATION OF INDOLE ALKALOID FORM MORINGA OLEIFERA AS A ANTICANCER AGENT

(51) International classification	:A61P 35/00
(31) Priority Document No	:NA
(32) Priority Date	:NA
(33) Name of priority country	:NA
(86) International Application No	:NA
Filing Date	:NA
(87) International Publication No	:N/A
(61) Patent of Addition to Application Number	:NA
Filing Date	:NA
(62) Divisional to Application Number	:NA
Filing Date	:NA

(71)**Name of Applicant :**
1)DR. DURAGKAR NANDAKISHORE JEEVANRAO
Address of Applicant :PLOT NO. 45, SHANKAR NAGAR, NAGPUR-440 010 Maharashtra India
(72)**Name of Inventor :**
1)DR. DURAGKAR NANDAKISHORE JEEVANRAO
2)DR. BHUSARI KISHOR PANDURANG
3)KATOLKAR PARIMAL PRADIPKUMAR

(57) Abstract :
The present invention provides the new process for the isolation of indole alkaloid from the bark of Moringa oleifera. The process comprises drying, grinding, and hot defatting of M. oleifera bark with petroleum ether. This is followed by the successive sequential hot extraction with the solvents viz; ethyl acetate, acetone, methanol and hydroalcohol. The solvents are then removed under vacuum preferably at a temperature in the range of 35-40°C. The hydroalcoholic crude extract obtained thereby is then subjected to column chromatography in chronological order of polarity of solvent starting with petroleum ether. The methanolic fraction showing similar pattern in TLC are mixed together and concentrated in vacuum under reduced pressure to get light brown colour new alkaloid. The crystal is washed to free form any adhere impurities. The crystals are dried and subjected to identification by spectrophotometric methods such as UV, IR, NMR and Mass. The isolated, purified and characterized new alkaloid is subjected to MTT Assay and Capsase-3 activity using cancerous cell line shows good anticancer activity.

No. of Pages : 17 No. of Claims : 8

(12) PATENT APPLICATION PUBLICATION
(19) INDIA
(22) Date of filing of Application :06/09/2012
(21) Application No.2587/MUM/2012 A
(43) Publication Date : 21/03/2014

(54) Title of the invention : AN INTEGRAL ONE PIECE STEAM TRAP

(51) International classification	:F16T1/00, F16T1/30
(31) Priority Document No	:NA
(32) Priority Date	:NA
(33) Name of priority country	:NA
(86) International Application No	:NA
Filing Date	:NA
(87) International Publication No	: NA
(61) Patent of Addition to Application Number	:NA
Filing Date	:NA
(62) Divisional to Application Number	:NA
Filing Date	:NA

(71)**Name of Applicant :**
1)UNI KLINGER LIMITED
Address of Applicant :C-37, M.I.D.C., AHEMADNAGAR - 414111 MAHARASHTRA, INDIA
(72)**Name of Inventor :**
1)MR. MANOJ GOYAL

(57) Abstract :
The present invention discloses an Integral one piece flanged type steam trap along with top cover and Filter cap. The steam trap is manufactured from a solid bar by drilling and machining operations. Plurality of mounting holes are provided on the body of said steam trap for directly mounting/fitment of said steam trap without any modification of said steam trap to match the site condition/field location on the respective flanged pipeline where said steam trap is required to be fitted or threading at the inlet opening and at the outlet opening respectively are provided to be matched with the threaded portions of the pipes of the pipeline for assembling said steam trap in required location on the pipeline or plain openings at the inlet opening and at the outlet opening respectively are provided to be matched with the non-threaded pipe portions of the pipes of the pipeline for assembling said steam trap in the required location on the pipeline by welding. These steam traps if to be fitted on the pipeline in the process industries or where steam is required to be carried through pipes up to user location then said steam trap does not require any modification and the same can be directly mounted on the pipe line. It is free from post manufacturing processes like welding with components like seamless pipes & flanges.

No. of Pages : 33 No. of Claims : 18

(12) PATENT APPLICATION PUBLICATION
(19) INDIA
(22) Date of filing of Application :17/09/2012
(21) Application No.2713/MUM/2012 A
(43) Publication Date : 21/03/2014

(54) Title of the invention : DESIGNING OF AN NOVEL OPTICAL BIOSENSOR FOR DETECTION OF ORGANOPHOSPHORUS PESTICIDES

(51) International classification :C07K16/00
(31) Priority Document No :NA
(32) Priority Date :NA
(33) Name of priority country :NA
(86) International Application No :NA
Filing Date :NA
(87) International Publication No :N/A
(61) Patent of Addition to Application Number :NA
Filing Date :NA
(62) Divisional to Application Number :NA
Filing Date :NA

(71)**Name of Applicant :**
1)DR. MONICA RAJAN SANANDAM
Address of Applicant :DEPARTMENT OF BIOTECHNOLOGY, KIT'S COLLEGE OF ENGINEERING, KOLHAPUR,M/S, 416234 Maharashtra India
(72)**Name of Inventor :**
1)DR. MONICA RAJAN SANANDAM
2)MR.AQUIL ANWARIL MERCHANT
3)MR.ASIF IQBAL MEVEKARI
4)MR. LALIT RAGHUNATH MUSMADE

(57) Abstract :
The present investigation deals with novel Design of an optical Biosensor for detection of organophosphorus pesticides. We have designed an optical based disposable microbial biosensor to determine methyl parathion pesticide. The sensing scheme was based on the measurement of product formation p-nitrophenol (PNP) by Organophosphorus hydrolase due to the hydrolysis of methyl parathion pesticide. The detection with optics biosensor is a simple, single step and direct Flavobacterium sp. NCIM 5107 microbial glass fiber disc was disposable. Disposable biocomponent was cost effective for methyl parathion detection. The absorbance of p-nitrophenol was detected at 401nm on UV-Visible spectrophotometer, by the proposed optics biosensor system. The designing of optics biosensor was done in three major steps - A) Design of reaction vessel, B) Design of assembly of biosensor and C) circuit design of biosensor. The sensing scheme leads to a direct determination of analyte as the rate of signal generation is directly proportional to the concentration of organophosphate. This biosensor is can be used as an important tool by various Environment Pollution Monitoring and Screening Agencies(Pollution Control Board) that have to keep a check on the increasing pollution and take preventive measures to curb them. This will ultimately result in the welfare of mankind and prove beneficial for the society.

No. of Pages : 22 No. of Claims : 6

(12) PATENT APPLICATION PUBLICATION
(19) INDIA
(22) Date of filing of Application :17/03/2011
(21) Application No.759/MUM/2011 A
(43) Publication Date : 21/03/2014

(54) Title of the invention : A SYSTEM AND METHOD FOR MEASURING, ANALYZING AND DISSEMINATING TV AUDIENCE DATA

(51) International classification	:H04H60/31, H04L12/56, H04M11/04
(31) Priority Document No	:NA
(32) Priority Date	:NA
(33) Name of priority country	:NA
(86) International Application No	:NA
Filing Date	:NA
(87) International Publication No	: NA
(61) Patent of Addition to Application Number	:2036/MUM/2009
Filed on	:07/09/2009
(62) Divisional to Application Number	:NA
Filing Date	:NA

(71)**Name of Applicant :**
1)TATA CONSULTANCY SERVICES LIMITED
Address of Applicant :NIRMAL BUILDING, 9TH FLOOR, NARIMAN POINT, MUMBAI 400021, MAHARASHTRA, INDIA
(72)**Name of Inventor :**
1)CHATTOPADHYAY TANUSHYAM
2)MISRA PRATEEP
3)PAL ARPAN
4)MUKHERJEE DEBNATH
5)BHATTACHARYA SIDDHARTH

(57) Abstract :
The present invention provides a system and method to determining TV audience by measuring audience data. The present invention further provides the analyzing and disseminating TV audience data in the form of interactive information.

No. of Pages : 13 No. of Claims : 10

(12) PATENT APPLICATION PUBLICATION
(19) INDIA
(22) Date of filing of Application :03/08/2012
(21) Application No.1898/MUMNP/2012 A
(43) Publication Date : 21/03/2014

(54) Title of the invention : MICROPHONE ARRAY SUBSET SELECTION FOR ROBUST NOISE REDUCTION

(51) International classification :G10L 21/02,H04R3/00
(31) Priority Document No :61/305,763
(32) Priority Date :18/02/2010
(33) Name of priority country :U.S.A.
(86) International Application No :PCT/US2011/025512
Filing Date :18/02/2011
(87) International Publication No :WO/2011/103488
(61) Patent of Addition to Application Number :NA
Filing Date :NA
(62) Divisional to Application Number :NA
Filing Date :NA

(71)**Name of Applicant :**
1)QUALCOMM INCORPORATED
Address of Applicant :Attn: International IP Administration 5775 Morehouse Drive San Diego California 92121-1714 U.S.A.
(72)**Name of Inventor :**
1)VISSER Erik
2)LIU Ernan

(57) Abstract :
A disclosed method selects a plurality of fewer than all of the channels of a multichannel signal, based on information relating to the direction of arrival of at least one frequency component of the multichannel signal.

No. of Pages : 103 No. of Claims : 34

(12) PATENT APPLICATION PUBLICATION
(19) INDIA
(22) Date of filing of Application :21/02/2012

(21) Application No.470/MUM/2012 A
(43) Publication Date : 21/03/2014

(54) Title of the invention : SELF BIASED HIGH EFFICIENCY FULLY DIFFERENTIAL RF RECTIFIER

(51) International classification	:H03F 1/02	
(31) Priority Document No	:NA	
(32) Priority Date	:NA	
(33) Name of priority country	:NA	
(86) International Application No	:NA	
Filing Date	:NA	
(87) International Publication No	:N/A	
(61) Patent of Addition to Application Number	:NA	
Filing Date	:NA	
(62) Divisional to Application Number	:NA	
Filing Date	:NA	

(71)**Name of Applicant :**
1)INDIAN INSTITUTE OF TECHNOLOGY, BOMBAY
Address of Applicant :POWAI MUMBAI 400076, MAHARASHTRA, INDIA
(72)**Name of Inventor :**
1)ARRAWATIA MAHIMA
2)SHOJAEI BAGHINI MARYAM
3)DIDDI VARISH
4)KUMAR GIRISH

(57) Abstract :
Self biased high efficiency fully differential RF rectifier. The rectifier (1) .comprises at least one stage having two NMOS transistors (2, 3) with isolated bulks. The source terminal (4) of one transistor 2 is connected to a first node (5) and the drain terminal (6) of said one transistor is earthed. The substrate terminal (7) of said one transistor is connected to the drain terminal thereof. The source terminal (8) of the other transistor (3) is connected to a second node (9) which is connected to an output terminal (10). The drain terminal (11), substrate terminal (12) and gate terminal (13) of the other transistor are connected to the first node. The gate terminal (14) of said one transistor is connected to the second node. The first and second nodes are connected across a RF source (15) through coupling capacitors (16, 17), respectively. The transistors are alternatively biased using the node voltage from each other. As a result, no external bias voltage is required. As the rectifier is fully differential, series resistance of the rectification path is reduced thereby increasing the power conversion efficiency of the rectifier .

No. of Pages : 19 No. of Claims : 6

(12) PATENT APPLICATION PUBLICATION
(19) INDIA
(22) Date of filing of Application :13/03/2012
(21) Application No.670/MUM/2012 A
(43) Publication Date : 21/03/2014

(54) Title of the invention : A SYSTEM AND A METHOD FOR BLOCKING THE BREAKER PROTECTION UNDER BREAKER FAILURE CONDITION

(51) International classification :H01H83/02
(31) Priority Document No :NA
(32) Priority Date :NA
(33) Name of priority country :NA
(86) International Application No :NA
Filing Date :NA
(87) International Publication No : NA
(61) Patent of Addition to Application Number :NA
Filing Date :NA
(62) Divisional to Application Number :NA
Filing Date :NA

(71)**Name of Applicant :**
1)LARSEN & TOUBRO LIMITED
Address of Applicant :L & T House Ballard Estate Mumbai 400 001 MAHARASHTRA, INDIA
(72)**Name of Inventor :**
1)DEY Moumita;

(57) Abstract :
The present invention relates to a system and a method for blocking the breaker protection under breaker failure condition. The system comprises means for receiving plurality of phase currents and an analog/digital (A/D) convertor means adapted to convert the phase currents into digital forms. A data acquisition and metering unit of numerical relay means being received the digital form and further a protection unit receiving the digital forms. The protection unit being installed in a CPU controller means, which is embedded inside the numerical relay means, being received the digital forms from the data acquisition and metering unit of the numerical relay means. The protection unit being processed in the CPU controller means and means for generating an output of the relay means.

No. of Pages : 16 No. of Claims : 9

(12) PATENT APPLICATION PUBLICATION
(19) INDIA
(22) Date of filing of Application :18/03/2011
(21) Application No.775/MUM/2011 A
(43) Publication Date : 21/03/2014

(54) Title of the invention : WATER HEATING APPARATUS USING SOLAR POWER

(51) International classification	:F24J2/38, F24J2/40
(31) Priority Document No	:099112014
(32) Priority Date	:16/04/2010
(33) Name of priority country	:Taiwan
(86) International Application No	:NA
Filing Date	:NA
(87) International Publication No	: NA
(61) Patent of Addition to Application Number	:NA
Filing Date	:NA
(62) Divisional to Application Number	:NA
Filing Date	:NA

(71)**Name of Applicant :**
1)FUNG GIN DA ENERGY SCIENCE AND TECHNOLOGY CO., LTD.
Address of Applicant :NO. 656, JHONGYUAN LANE, JHUWEI VILLAGE, NEIPU TOWNSHIP, PINGTUNG COUNTY, TAIWAN
(72)**Name of Inventor :**
1)CHUNG CHUN-NENG

(57) Abstract :
A solar power water heating apparatus includes a supporting device (3) for supporting movably a mounting seat (21) provided with a condensing unit on a mounting side (211) thereof for concentrating sunlight onto a heat-conductive tube body (22) in the mounting seat (21) . The tube body (22) absorbs thermal energy from the sunlight concentrated thereonto and transmits the thermal energy to water therein, thereby heating the water. The supporting device (3) includes a disk member (32) mounted rotatably on a hollow base body (31) and driven by a drive unit in the base body (31) to rotate relative to the base body (31) in a central axis (a) of the disk member (32), and a telescopic rod member (34) and two upright supporting rods (35) interconnecting the mounting seat (21) and the disk member (32}. A control module (4) controls the drive unit and the telescopic rod member (34) based on a solar radiating direction to move the mounting side (211) of the mounting seat (21) to face sunlight.

No. of Pages : 24 No. of Claims : 9

(12) PATENT APPLICATION PUBLICATION
(19) INDIA
(22) Date of filing of Application :03/08/2012
(21) Application No.1900/MUMNP/2012 A
(43) Publication Date : 21/03/2014

(54) Title of the invention : METHOD AND APPARATUS FOR SIGNALING TRANSMISSION CHARACTERISTICS IN A WIRELESS COMMUNICATION NETWORK

(51) International classification	:H04W 84/12,H04L 5/00
(31) Priority Document No	:12/703,543
(32) Priority Date	:10/02/2010
(33) Name of priority country	:U.S.A.
(86) International Application No	:PCT/US2010/061919
Filing Date	:22/12/2010
(87) International Publication No	:WO/2011/100037
(61) Patent of Addition to Application Number	:NA
Filing Date	:NA
(62) Divisional to Application Number	:NA
Filing Date	:NA

(71)**Name of Applicant :**
1)QUALCOMM INCORPORATED
Address of Applicant :Attn: International IP Administration 5775 Morehouse Drive San Diego California 92121-1714 U.S.A.
(72)**Name of Inventor :**
1)TAGHAVI NASRABADI Mohammad Hossein
2)SAMPATH Hemanth
3)JAIN Avinash
4)LAKKIS Ismail

(57) Abstract :
A wireless network uses an improved frame structure to increase timing acquisition capabilities as well as reduction of spectral lines. In one aspect, the frame packet can be used to communicate the different modes of operation under which the packet was created.

No. of Pages : 48 No. of Claims : 23

(12) PATENT APPLICATION PUBLICATION
(19) INDIA
(22) Date of filing of Application :15/12/2012
(21) Application No.2790/MUMNP/2012 A
(43) Publication Date : 21/03/2014

(54) Title of the invention : USE OF AN ESTROGEN DERIVATIVE FOR THE MANUFACTURE OF PHARMACEUTICAL COMPOSITIONS USEFUL FOR THE TREATMENT AND/OR PREVENTION OF PSYCHIATRIC DISEASES AND FOR THE TREATMENT AND PREVENTION OF SAID DISEASES

(51) International classification	:A61P25/18, A61K31/565
(31) Priority Document No	:P1000335
(32) Priority Date	:22/06/2010
(33) Name of priority country	:Hungary
(86) International Application No	:PCT/HU2011/000060
Filing Date	:28/06/2011
(87) International Publication No	:WO/2011/161484
(61) Patent of Addition to Application Number	:NA
Filing Date	:NA
(62) Divisional to Application Number	:NA
Filing Date	:NA

(71)**Name of Applicant :**
1)AVIDIN KUTAT FEJLESZTO ‰S KERESKEDELMI KORL TOLT
Address of Applicant :Szeged H-6726 Als³ kikto sor 11 Hungary
2)UBICHEM KUTAT KORL TOLT FELELOSS‰GU T RSAS G
(72)**Name of Inventor :**
1)HAJSZ N Tibor
2)PUSK S L¡szl³
3)ZSV RI Bla
4)NAGY Lajos Istv¡n

(57) Abstract :
The object of the invention is the use of 17-alpha-estradiol of formula (I) (I) and its derivatives for the treatment and/or prevention of psychiatric clinical pictures. According to the invention 17-alpha-estradiol and its derivatives can be used preferably as antidepressant drugs especially preferably as quick-acting antidepressant drugs. According to the invention 17-alpha-estradiol of formula (I) and its derivatives can also be used for the treatment and/or prevention of postpartum depression post-menopausal depression anxiety schizophrenia memory disturbance associated with depression or bipolar depression.

No. of Pages : 18 No. of Claims : 17

(12) PATENT APPLICATION PUBLICATION
(19) INDIA
(22) Date of filing of Application :16/02/2012
(21) Application No.428/MUM/2012 A
(43) Publication Date : 21/03/2014

(54) Title of the invention : A NEUTRAL MONOLITHIC REFRACTORY LINING OF AI203 BASED, FOR CORELESS INDUCTION FURNANCE (LOW POWER TO HIGH POWER DENSITY) AND METHOD OF MAKING A LINING THEREOF FOR ALUMINIUM MELTING & DIFFERENT DERIVATIVE OF ALUMINIUM MELTING / BY PRODUCT OF ALUMINIUM MELTING, BY USAGE OF CASTABLE CEMENT (MINIMUM 65% - 93% AI203), SUITABLE FOR CONTINUOUS AS WELL AS INTERMITTENT OPERATION OF CORELESS INDUCTION FURNACE.

(51) International classification :F27B 14/08
(31) Priority Document No :NA
(32) Priority Date :NA
(33) Name of priority country :NA
(86) International Application No :NA
Filing Date :NA
(87) International Publication No :N/A
(61) Patent of Addition to Application Number :NA
Filing Date :NA
(62) Divisional to Application Number :NA
Filing Date :NA

(71)**Name of Applicant :**
1)M/S. SUNEEM INDUSTRIES PRIVATE LIMITED
Address of Applicant :PLOT NO. C-12, FIVE STAR MIDC, SHENDRA, AURANGABAD-431201, MAHARASHTRA, INDIA
(72)**Name of Inventor :**
1)MR. DINESH S. SHUKLA
2)MR. ANUP S. BHALA
3)MR. SHIVPRASAD B. SONI

(57) Abstract :
A neutral AI2O3 based monolithic composition and /or method of lining using the same for refractory lining of Coreless Induction Furnaces which meets stated and implied needs of good refractory suitable for melting of aluminium, aluminium alloy, dross, also comprising of alloying added along with initial Aluminium charging as Well as late additions of pure Silicon (Si), Ferro-Silicon(FeSi), Copper(Cu), alloys of copper, Zinc(zn) , alloys of Zinc, Magnesium (Mg) ,alloys of Magnesium, Manganese (Mn) ,alioys of Manganese, Titanium (Ti),alloys of Titanium , Boron (B) .alloys of Boron, Vanadium (V) .alloys of Vanadium, Nickel (Ni) .alloys of Nickel, Chromium and Chromium alloys, pure Tin (Sn), Phosphorous (P), alloys of copper Phosphorous, Lead (Pb) .Strontium (Sr), alloys of Strontium, Lithium (Li),alloys of Lithium, Zirconium (Zr) , Zirconium Alloy, Bismuth (Bi), Beryllium (Be) and Cadmium (Cd),

No. of Pages : 29 No. of Claims : 5

(12) PATENT APPLICATION PUBLICATION
(19) INDIA
(22) Date of filing of Application :18/03/2011
(21) Application No.779/MUM/2011 A
(43) Publication Date : 21/03/2014

(54) Title of the invention : A RETENTION ARRANGEMENT FOR ROTATING PARTS

(51) International classification	:F02C7/22, F02C7/36
(31) Priority Document No	:NA
(32) Priority Date	:NA
(33) Name of priority country	:NA
(86) International Application No	:NA
Filing Date	:NA
(87) International Publication No	: NA
(61) Patent of Addition to Application Number	:NA
Filing Date	:NA
(62) Divisional to Application Number	:NA
Filing Date	:NA

(71)**Name of Applicant :**
1)TATA MOTORS LIMITED
Address of Applicant :BOMBAY HOUSE, 24 HOMI MODY STREET, MUMBAI-400001, MAHARASHTRA, INDIA
(72)**Name of Inventor :**
1)JANARDHANAN VENKATAPATHI

(57) Abstract :
A coupling arrangement provided for retaining a part on a shaft with retaining grooves formed on the part and the shaft. A set of semicircular coupling elements having two layered annular lugs is provided for holding the part and the shaft together using the respective grooves formed on the part and the shaft. A circular coupling sleeve holds both the coupling elements together against the part and the shaft. A retainer ring and shoulders on the coupling elements are used to retain the coupling sleeve from sliding out of position. The coupling arrangement retains the shaft and the part with coupling on one side of the shaft and restricting axial movement of the part in both the directions of the shaft.

No. of Pages : 19 No. of Claims : 8

(12) PATENT APPLICATION PUBLICATION
(19) INDIA
(22) Date of filing of Application :11/01/2013
(21) Application No.106/MUMNP/2013 A
(43) Publication Date : 21/03/2014

(54) Title of the invention : A METHOD OF ANALYSING A BLOOD SAMPLE OF A SUBJECT FOR THE PRESENCE OF A DISEASE MARKER

(51) International classification :G01N33/48
(31) Priority Document No :10169897.5
(32) Priority Date :16/07/2010
(33) Name of priority country :EPO
(86) International Application No :PCT/NL2011/050518
Filing Date :15/07/2011
(87) International Publication No :WO 2012/008839
(61) Patent of Addition to Application Number :NA
Filing Date :NA
(62) Divisional to Application Number :NA
Filing Date :NA

(71)**Name of Applicant :**
1)STICHTING VU VUMC
Address of Applicant :De Boelelaan 1105 NL 1081 HV Amsterdam Netherlands
(72)**Name of Inventor :**
1)WRDINGER Thomas
2)NILSSON Rolf Jonas

(57) Abstract :
The present invention relates to a method of analysing a blood sample of a subject for the presence of a disease marker, said method comprising the steps of a) extracting nucleic acid from anucleated blood cells in said blood sample to provide an anucleated blood cells-extracted nucleic acid fraction, and b) analysing said anucleated blood cells-extracted nucleic acid frac-tion for the presence of a disease marker, wherein said disease marker is a disease-specific mutation in a gene of a cell of said sub-ject, or wherein said disease marker is a disease-specific expression profile of genes of a cell of said subject.

No. of Pages : 79 No. of Claims : 16

(12) PATENT APPLICATION PUBLICATION
(19) INDIA
(22) Date of filing of Application :15/01/2013
(21) Application No.125/MUMNP/2013 A
(43) Publication Date : 21/03/2014

(54) Title of the invention : DETERGENT COMPOSITIONS COMPRISING BIOSURFACTANT AND ENZYME

(51) International classification :C11D1/06,C11D3/386
(31) Priority Document No :10170401.3
(32) Priority Date :22/07/2010
(33) Name of priority country :EPO
(86) International Application No :PCT/EP2011/061210
Filing Date :04/07/2011
(87) International Publication No :WO 2012/010405
(61) Patent of Addition to Application Number :NA
Filing Date :NA
(62) Divisional to Application Number :NA
Filing Date :NA

(71)**Name of Applicant :**
1)HINDUSTAN UNILEVER LIMITED
Address of Applicant :Unilever House B.D. Sawant Marg Chakala Andheri East Mumbai 400 099 MAHARASHTRA, INDIA
(72)**Name of Inventor :**
1)PARRY Alyn James
2)PARRY Neil James
3)PEILOW Anne Cynthia
4)STEVENSON Paul Simon

(57) Abstract :
A cleaning composition comprising an effective amount of surfactant system and an enzyme system characterised in that the surfactant system comprises at least 1 wt% (based on the cleaning composition) of a biosurfactant of bacterial origin and at least one enzyme of bacterial origin selected from the group comprising: cellulases, lipases, esterases, peroxidases/oxidases, oxidoreductases, pectases, lyases, mannanases and mixtures thereof.

No. of Pages : 16 No. of Claims : 3

(12) PATENT APPLICATION PUBLICATION
(19) INDIA
(22) Date of filing of Application :21/02/2012
(21) Application No.476/MUM/2012 A
(43) Publication Date : 21/03/2014

(54) Title of the invention : INTEGRATING PAYMENT AGGREGATORS WITH E-COMMERCE PLATFORM

(51) International classification	:G06K 17/00
(31) Priority Document No	:NA
(32) Priority Date	:NA
(33) Name of priority country	:NA
(86) International Application No	:NA
Filing Date	:NA
(87) International Publication No	: NA
(61) Patent of Addition to Application Number	:NA
Filing Date	:NA
(62) Divisional to Application Number	:NA
Filing Date	:NA

(71)**Name of Applicant :**
1)TATA CONSULTANCY SERVICES LIMITED
Address of Applicant :Nirmal Building 9th Floor Nariman Point Mumbai 400021 Maharashtra India
(72)**Name of Inventor :**
1)SENAPATI Tapas Ranjan
2)SAHOO Rakesh
3)PUROHIT Sumit
4)HATI Rashmi Ranjan

(57) Abstract :
Systems and methods for integrating an e-commerce platform (104) with at least one payment aggregator are provided. The system comprising a processor (108) and a memory (112) coupled to the processor (108). The memory (112) comprises an integrating module (118) configured to provide a Generic Interface Framework (GIF). The GIF comprises aplurality of configuration files having activity details of a plurality of payment aggregators (106). The integrating module (118) is further configured to integrate at least one payment aggregator selected from amongst the plurality of payment aggregators (106) with the e-commerce platform (104) based upon the plurality of configuration files.

No. of Pages : 19 No. of Claims : 17

(12) PATENT APPLICATION PUBLICATION
(19) INDIA
(22) Date of filing of Application :21/03/2011
(21) Application No.786/MUM/2011 A
(43) Publication Date : 21/03/2014

(54) Title of the invention : INTEGRATED SYSTEM FOR RESIDUAL AND OVERCURRENT FAULT DETECTION

(51) International classification	:H02H7/08, H02H3/08
(31) Priority Document No	:NA
(32) Priority Date	:NA
(33) Name of priority country	:NA
(86) International Application No	:NA
Filing Date	:NA
(87) International Publication No	: NA
(61) Patent of Addition to Application Number	:NA
Filing Date	:NA
(62) Divisional to Application Number	:NA
Filing Date	:NA

(71)**Name of Applicant :**
1)LARSEN & TOUBRO LIMITED
Address of Applicant :L & T House Ballard Estate Mumbai 400 001 MAHARASHTRA, INDIA
(72)**Name of Inventor :**
1)DESHMUKH Vinod
2)JETHLIYA Rajesh

(57) Abstract :
This invention relates generally to a system for fault detection and more particularly to an integrated system for residual and over current detection. It comprises a current transformer for residual current detection, said current transformer for residual current detection passing through phase and neutral, secondary side of said current transformer for residual current detection connected to a winding, said winding connected to an amplifier, said amplifier connected to a rectifier to make the output of said amplifier unidirectional, said unidirectional output from said rectifier fed to input port (A1) of a microcontroller; a current transformer for over current detection, said current transformer for over current detection passing through phase, secondary side of said current transformer for over current detection connected to a winding, said winding connected to a rectifier, output from said rectifier fed to input port (B1) of said microcontroller.

No. of Pages : 15 No. of Claims : 12

(12) PATENT APPLICATION PUBLICATION
(19) INDIA
(22) Date of filing of Application :22/08/2012
(21) Application No.2017/MUMNP/2012 A
(43) Publication Date : 21/03/2014

(54) Title of the invention : VOICE ACTIVITY DETECTION BASED ON PLURAL VOICE ACTIVITY DETECTORS

(51) International classification :G10L 11/02
(31) Priority Document No :12/711,943
(32) Priority Date :24/02/2010
(33) Name of priority country :U.S.A.
(86) International Application No :PCT/US2010/060363
Filing Date :14/12/2010
(87) International Publication No :WO/2011/106065
(61) Patent of Addition to Application Number :NA
Filing Date :NA
(62) Divisional to Application Number :NA
Filing Date :NA

(71)**Name of Applicant :**
1)QUALCOMM INCORPORATED
Address of Applicant :Attn: International IP Administration 5775 Morehouse Drive San Diego California 92121-1714 U.S.A.
(72)**Name of Inventor :**
1)LEE Te-Won

(57) Abstract :
A voice activity detection (VAD) system includes a first voice activity detector, a second voice activity detector and control logic. The first voice activity detector is included in a device and produces a first VAD signal. The second voice activity detector is located externally to the device and produces a second VAD signal. The control logic combines the first and second VAD signals into a VAD output signal. Voice activity may be detected based on the VAD output signal. The second VAD signal can be represented as a flag included in a packet containing digitized audio. The packet can be transmitted to the device from the externally located VAD over a wireless link.

No. of Pages : 29 No. of Claims : 32

(12) PATENT APPLICATION PUBLICATION
(19) INDIA
(22) Date of filing of Application :14/09/2012
(21) Application No.2688/MUM/2012 A
(43) Publication Date : 21/03/2014

(54) Title of the invention : MOLYBDENUM SULFIDE NANOPARTICLES CONTAINING FORMULATION.

(51) International classification :C07F11/00
(31) Priority Document No :NA
(32) Priority Date :NA
(33) Name of priority country :NA
(86) International Application No :NA
Filing Date :NA
(87) International Publication No :N/A
(61) Patent of Addition to Application Number :NA
Filing Date :NA
(62) Divisional to Application Number :NA
Filing Date :NA

(71)**Name of Applicant :**
1)SECRETARY, DEPARTMENT OF INFORMATION TECHNOLOGY(DIT)
Address of Applicant :MINISTRY OF COMMUNICATION AND INFORMATION TECHNOLOGY, GOVERNMENT OF INDIA, ELECTRONICS NIKETAN,6, CGO COMPLEX, LODHI ROAD, NEW DELHI 110 003, INDIA.
2)EXECUTIVE DIRECTOR, CENTRE FOR MATERIALS FOR ELECTRONICS TECHNOLOGY(C-MET)
(72)**Name of Inventor :**
1)QURESHI NILAM
2)SHINDE MANISH
3)UMARJI GOVIND
4)PATIL RAJENDRA
5)GADE WASUDEV
6)MULIK UTTAMRAO
7)AMALNERKAR DINESH

(57) Abstract :
In accordance with the present disclosure there is provided an antimicrobial composition comprising molybdenum sulfide nanoparticles and at least one excipient wherein the molybdenum sulfide nanoparticles are multiphasic nanoparticles obtained from the group consisting of MoS2, Mo15S19, Mo6S8, MoS3, M0S4, MoS5 and MoS6.

No. of Pages : 41 No. of Claims : 22

(12) PATENT APPLICATION PUBLICATION
(19) INDIA
(22) Date of filing of Application :16/02/2012
(21) Application No.435/MUM/2012 A
(43) Publication Date : 21/03/2014

(54) Title of the invention : THERMAL MAGNETIC RELEASE ASSEMBLED AS A SINGLE POLE MODULE FOR TRIPPING A CIRCUIT BREAKER

(51) International classification	:H01H 71/16
(31) Priority Document No	:NA
(32) Priority Date	:NA
(33) Name of priority country	:NA
(86) International Application No	:NA
Filing Date	:NA
(87) International Publication No	: NA
(61) Patent of Addition to Application Number	:NA
Filing Date	:NA
(62) Divisional to Application Number	:NA
Filing Date	:NA

(71)**Name of Applicant :**
1)LARSEN & TOUBRO LIMITED
Address of Applicant :L & T House Ballard Estate Mumbai 400 001 MAHARASHTRA, INDIA
(72)**Name of Inventor :**
1)DONGRE Nilesh S.
2)OCHANI Deepak

(57) Abstract :
This invention relates generally to a thermal magnetic release assembly and more particularly to a thermal-magnetic release assembled as a single pole module used for tripping a circuit breaker. The purpose of the invention is to have single pole modular assembly with least number of components so as to reduce the inter-dependency between components and hence faster response to the unhealthy electrical conditions and in addition to this with least number of components which can be assembled with the MCCB to save assembly time and ease production.

No. of Pages : 19 No. of Claims : 9

(12) PATENT APPLICATION PUBLICATION
(19) INDIA
(22) Date of filing of Application :22/02/2012
(21) Application No.482/MUM/2012 A
(43) Publication Date : 21/03/2014

(54) Title of the invention : INNOVATIVE ROLLER COOLING SYSTEM IN OFFSET PRINTING PROCESS.

(51) International classification	:B41F 7/36
(31) Priority Document No	:NA
(32) Priority Date	:NA
(33) Name of priority country	:NA
(86) International Application No	:NA
Filing Date	:NA
(87) International Publication No	:N/A
(61) Patent of Addition to Application Number	:NA
Filing Date	:NA
(62) Divisional to Application Number	:NA
Filing Date	:NA

(71)**Name of Applicant :**
1)BHOOMKAR MANMOHAN MANIKRAO
Address of Applicant :M-5/303,MHB COLONY,LAXMI NAGAR,PARVATI,PUNE-09 Maharashtra India
(72)**Name of Inventor :**
1)BHOOMKAR MANMOHAN M.
2)SANE NARAYAN K.

(57) Abstract :
In traditional Offset printing, machine works on principle of lithography which requires an image career in form of plate. Where proper ink-water balance is to be maintained so as to achieve desired print quality. Copper coated metallic rollers are used for spreading ink through inking system. Thermal expansion of rollers caused due to uninterrupted running of machines shows ill affects the ink film thickness. The rollers which are in contact with plate and finally with paper have been modified to accommodate coolant flow. The chilled water is circulated at a temperature which will give the desired surface temperature and wire insert gives the uniform temperature distribution along the length.

No. of Pages : 6 No. of Claims : 2

(12) PATENT APPLICATION PUBLICATION
(19) INDIA
(22) Date of filing of Application :21/03/2011

(21) Application No.787/MUM/2011 A
(43) Publication Date : 21/03/2014

(54) Title of the invention : UNIDIRECTIONAL POWER TRANSMISSION MECHANISM FOR A MCCB

(51) International classification	:B60K2702/18, B60K41/00
(31) Priority Document No	:NA
(32) Priority Date	:NA
(33) Name of priority country	:NA
(86) International Application No	:NA
Filing Date	:NA
(87) International Publication No	: NA
(61) Patent of Addition to Application Number	:NA
Filing Date	:NA
(62) Divisional to Application Number	:NA
Filing Date	:NA

(71)**Name of Applicant :**
1)LARSEN & TOUBRO LIMITED
Address of Applicant :L & T House Ballard Estate Mumbai 400 001 MAHARASHTRA, INDIA
(72)**Name of Inventor :**
1)ARUNACHALAM Gokulakrishnan
2)KARUNANITHI Senthilkumar

(57) Abstract :
The present invention relates to circuit breakers. More particularly, the present invention relates to a unidirectional power transmission mechanism operating on meshing concept for a pneumatic operated MCCB. unidirectional power transmission mechanism operating on meshing concept for a pneumatic operated MCCB, said mechanism comprising a torsion spring means (4) adapted to resist against jerk and shock; a combined clutch and bearing mechanism transferring torque in one direction and permitting free wheeling rotation in the other direction, said clutch connected to a drive source and a load, said clutch rotating said load in one direction; a shaft (1) having a slot, said slot having a pawl (2) and said torsion spring means (4) placed therein; a cam (3) having a ratchet profile, said profile hold in position using a flange running freely over said shaft (1).

No. of Pages : 11 No. of Claims : 6

(12) PATENT APPLICATION PUBLICATION
(19) INDIA
(22) Date of filing of Application :16/12/2010
(21) Application No.3439/MUM/2010 A
(43) Publication Date : 21/03/2014

(54) Title of the invention : BIODEGRADABLE EDIBLE PLASTIC FROM THE DIOSCOREA STARCH

(51) International classification	:C08L3/00, C08K13/02,C08K5/053
(31) Priority Document No	:NA
(32) Priority Date	:NA
(33) Name of priority country	:NA
(86) International Application No	:NA
Filing Date	:NA
(87) International Publication No	: NA
(61) Patent of Addition to Application Number	:NA
Filing Date	:NA
(62) Divisional to Application Number	:NA
Filing Date	:NA

(71)**Name of Applicant :**
1)SMITA LELE
Address of Applicant :HEAD, FOOD ENGINEERING & TECHNOLOGY DEPT., INSTITUTE OF CHEMICAL TECHNOLOGY (ICT), NATHALAL PAREKH MARG, MATUNGA (EAST) MUMBAI-400 019. MAHARASHTRA, INDIA
2)HEENA SHAH
(72)**Name of Inventor :**
1)SMITA LELE
2)SMITA LELE

(57) Abstract :
The present invention leads to a biodegradable edible plastic from the tuber Dioscorea alata var purpurae starch and plasticizer propan-l,2,3-triol. The plastic is made by simple, economical and clean processes like gelatinization and casting. This plastic has variable applications in food, pharmaceutical, chemical and allied sectors. This plastic is advantageous as it help us to conserve our petrochemical resources and give us an alternative raw material by utilising the lesser explored tuber Dioscorea and thereby save our environment from the problem of the century i.e., plastic pollution.

No. of Pages : 16 No. of Claims : 7

(12) PATENT APPLICATION PUBLICATION
(19) INDIA
(22) Date of filing of Application :22/02/2012
(21) Application No.488/MUM/2012 A
(43) Publication Date : 21/03/2014

(54) Title of the invention : COMPOUNDS, COMPOSITIONS FORMULATIONS AND PROCESS FOR PREPARATION THEREOF AND METHOD OF TREATMENT AND MANAGEMENT OF ACIDITY AND RELATED DISORDERS.

(51) International classification :A61K 36/48
(31) Priority Document No :NA
(32) Priority Date :NA
(33) Name of priority country :NA
(86) International Application No :NA
Filing Date :NA
(87) International Publication No :N/A
(61) Patent of Addition to Application Number :NA
Filing Date :NA
(62) Divisional to Application Number :947/MUM/2004
Filed on :01/09/2004

(71)**Name of Applicant :**
1)SAVANGIKAR, CHITRA VASANT
Address of Applicant :4, TAPASVI APARTMENTS, PRASANNA COLONY, INDIRANAGAR, NASHIK - 422 009, MAHARASHTRA, INDIA
2)SAVANGIKAR, VASANT ANANTRAO
(72)**Name of Inventor :**
1)SAVANGIKAR, CHITRA VASANT
2)SAVANGIKAR, VASANT ANANTRAO

(57) Abstract :
Novel antacid preparations, methods of preparation of the same and a method of treating acidity related disorders using the said novel antacid composition are described. The antacid composition of this invention are based on use of proteins and their derivatives including their hydrolysates and enzymatic treatment products such as plasteins and their alkaline derivatives for actual acid neutralizing capacity or for discomfort relief or both. Alkaline derivatives having pH above 6.5 of proteins, protein hydrolysates, amino acid, amino acid mixtures and salts of amino acids are novel products.

No. of Pages : 26 No. of Claims : 11

(12) PATENT APPLICATION PUBLICATION
(19) INDIA
(22) Date of filing of Application :21/03/2011
(21) Application No.791/MUM/2011 A
(43) Publication Date : 21/03/2014

(54) Title of the invention : METHOD OF SILVER PLATING OF COMPONENTS USING A VERTICAL AXIS TROLLEY

(51) International classification	:C23C 18/54,C23C 18/44
(31) Priority Document No	:NA
(32) Priority Date	:NA
(33) Name of priority country	:NA
(86) International Application No	:NA
Filing Date	:NA
(87) International Publication No	: NA
(61) Patent of Addition to Application Number	:NA
Filing Date	:NA
(62) Divisional to Application Number	:NA
Filing Date	:NA

(71)**Name of Applicant :**
1)LARSEN & TOUBRO LIMITED
Address of Applicant :L & T House Ballard Estate Mumbai 400 001 MAHARASHTRA, INDIA
(72)**Name of Inventor :**
1)MAKUNY Nikhil Jagadish
2)PANDA Deepak Kumar
3)JOGLEKAR Devendra Parshuram
4)DALVI Vilas N.

(57) Abstract :
The present invention relates generally to a method of silver plating. More particularly the present invention relates to a method of Silver plating of components using a vertical axis trolley thereby improving thermal and electrical conductivity. Said method comprising the steps of providing first stage plating of said components; providing vibratory finishing operation ensuring removal of passive layer formed on said components during said first stage plating; putting said components in plating line; chemical cleaning operation of said components by switching off ultrasonic and completely preventing electrochemical process of anodic cleaning; and continuing the plating cycle of said components.

No. of Pages : 14 No. of Claims : 6

(12) PATENT APPLICATION PUBLICATION
(19) INDIA
(22) Date of filing of Application :21/03/2011

(21) Application No.792/MUM/2011 A
(43) Publication Date : 21/03/2014

(54) Title of the invention : ARC RESISTANCE ARRANGEMENT FOR SWITCHING DEVICES AND A METHOD THEREOF

(51) International classification	:H01H47/00, H01H9/34, H01H3/00
(31) Priority Document No	:NA
(32) Priority Date	:NA
(33) Name of priority country	:NA
(86) International Application No	:NA
Filing Date	:NA
(87) International Publication No	: NA
(61) Patent of Addition to Application Number	:NA
Filing Date	:NA
(62) Divisional to Application Number	:NA
Filing Date	:NA

(71)**Name of Applicant :**
1)LARSEN & TOUBRO LIMITED
Address of Applicant :L & T House Ballard Estate Mumbai 400 001 MAHARASHTRA, INDIA
(72)**Name of Inventor :**
1)KAMAT Sudhir S.;
2)LONDHE Rajesh S. ;
3)KANNADKAR Dinesh R.;
4)DAVE Mahendra C.;

(57) Abstract :
This invention relates generally to a switching device and more particularly to an arc resistant arrangement for use in switching devices facilitating cooling and reduction in arc gas pressure and a method thereof. The arrangement comprising an arc shield fixed on each cradle side plate with plurality of screws and nuts, said arc shield having an assembly of plurality of horizontal and vertical vents for release of arc gases, said arc shield having an extended portion extending from top of an arc chute to end of said cradle side plate and covering disconnecting contact.

No. of Pages : 25 No. of Claims : 6

(12) PATENT APPLICATION PUBLICATION
(19) INDIA
(22) Date of filing of Application :17/09/2012
(21) Application No.2700/MUM/2012 A
(43) Publication Date : 21/03/2014

(54) Title of the invention : MODIFIED STETHOSCOPE FOR AUSCULTATION OF TEMPOROMANDIBULAR JOINT SOUND AND METHOD THEREOF.

(51) International classification	:A61B7/00
(31) Priority Document No	:NA
(32) Priority Date	:NA
(33) Name of priority country	:NA
(86) International Application No	:NA
Filing Date	:NA
(87) International Publication No	:N/A
(61) Patent of Addition to Application Number	:NA
Filing Date	:NA
(62) Divisional to Application Number	:NA
Filing Date	:NA

(71)**Name of Applicant :**
1)SANJIV RAJENDRA SINGH DAGAR
Address of Applicant :OF SHARAD PAWAR DENTAL COLLEGE AND HOSPITAL,SAWANGI(MEGHE), WARDHA-442 004, MAHARASHTRA, INDIA
(72)**Name of Inventor :**
1)SANJIV RAJENDRA SINGH DAGAR

(57) Abstract :
The present invention relates to a stethoscope and an attachment portion for a stethoscope providing improved analysis capabilities, and advantageously being embodied in a structure presenting enhanced appearance and function, in a form particularly well suited for use in auscultation of the Temporomandibular Joint (TMJ) sounds only. The invention also relates to a method of processing electronic signals relating to Temporomandibular Joints in real-time, analyzing the electronic signals, and displaying results of the analysis.

No. of Pages : 27 No. of Claims : 10

(12) PATENT APPLICATION PUBLICATION
(19) INDIA
(22) Date of filing of Application :16/02/2012
(21) Application No.436/MUM/2012 A
(43) Publication Date : 21/03/2014

(54) Title of the invention : DRUG COATING APPARATUS

(51) International classification :A61F002/06
(31) Priority Document No :NA
(32) Priority Date :NA
(33) Name of priority country :NA
(86) International Application No :NA
Filing Date :NA
(87) International Publication No : NA
(61) Patent of Addition to Application Number :NA
Filing Date :NA
(62) Divisional to Application Number :NA
Filing Date :NA

(71)**Name of Applicant :**
1)SAHAJANAND TECHNOLOGIES PRIVATE LIMITED
Address of Applicant :SAHAJANAND HOUSE PARSI STREET SAIYEDPURA SURAT 395003 Maharashtra India
(72)**Name of Inventor :**
1)GAYWALA Rahul Mahendrakumar
2)NAROLA Vallabh Mohan

(57) Abstract :
A drug coating apparatus (100) for coating an implant (206) with a drug is described. The drug coating apparatus (100) includes a holding unit (102) having a top collet (202-1) for holding the implant (206) from a top end of the implant (206), and a bottom collet (202-2) to hold the implant (206) from a bottom end of the implant (206). The drug coating apparatus (100) includes at least one rotary drive (115) coupled to the holding unit (102) for rotating the top collet (202-1), the bottom collet (202-2) and the implant (206), and includes a spraying unit (104) to spray-coat the drug on the implant (206).

No. of Pages : 31 No. of Claims : 18

(12) PATENT APPLICATION PUBLICATION
(19) INDIA
(22) Date of filing of Application :07/03/2011

(21) Application No.631/MUM/2011 A
(43) Publication Date : 21/03/2014

(54) Title of the invention : STEERING WOBBLE REDUCTION MECHANISM

(51) International classification	:F16H1/16, F16H57/00
(31) Priority Document No	:NA
(32) Priority Date	:NA
(33) Name of priority country	:NA
(86) International Application No	:NA
Filing Date	:NA
(87) International Publication No	:N/A
(61) Patent of Addition to Application Number	:NA
Filing Date	:NA
(62) Divisional to Application Number	:NA
Filing Date	:NA

(71)**Name of Applicant :**
1)TATA MOTORS LIMITED
Address of Applicant :BOMBAY HOUSE, 24 HOMI MODY STREET, MUMBAI-400001 MAHARASHTRA, INDIA
(72)**Name of Inventor :**
1)PRAFUL BONDE

(57) Abstract :
The present invention relates to a wobble reduction device for a vehicle steering system provided on either side of vehicle rack (303). The device comprises a reservoir (401) for storing a fluid, a cylindrical casing (405) disposed between the vehicle rack (303) and inner ball joint (302) of vehicle tie rod (306), a fluid vibration dampener (410) hydraulically connected to the reservoir (401) for suppressing vibration of said vehicle steering system, said dampener (410) is disposed within the cylindrical casing (405) and is operatively connected to said vehicle rack (303) and the inner ball joint (302), a first linkage (403) having its first end operatively connected to the vehicle rack (302) and its second end operatively connected to the dampener (410), a second linkage (404) having its first end operatively connected to the inner ball joint (302) and its second end operatively connected to the dampener (410) and a spring loaded valve (402) disposed between the reservoir (401) and the dampener (410) for maintaining constant hydraulic pressure of the dampener (410).

No. of Pages : 17 No. of Claims : 10

(12) PATENT APPLICATION PUBLICATION
(19) INDIA
(22) Date of filing of Application :21/03/2011
(21) Application No.790/MUM/2011 A
(43) Publication Date : 21/03/2014

(54) Title of the invention : SWITCH DISCONNECTOR MODULE FOR USE IN SWITCHING DEVICES

(51) International classification	:H01R25/00, H01H71/20
(31) Priority Document No	:NA
(32) Priority Date	:NA
(33) Name of priority country	:NA
(86) International Application No	:NA
Filing Date	:NA
(87) International Publication No	: NA
(61) Patent of Addition to Application Number	:NA
Filing Date	:NA
(62) Divisional to Application Number	:NA
Filing Date	:NA

(71)**Name of Applicant :**
1)LARSEN & TOUBRO LIMITED
Address of Applicant :L & T House Ballard Estate Mumbai 400 001 MAHARASHTRA, INDIA
(72)**Name of Inventor :**
1)Patil Rohit Naresh
2)Thakur Pankaj Dattatraya
3)FEGADE Pramod L.
4)CHOUDHARI Sadanand G.

(57) Abstract :
The present invention relates to switching devices. More particularly, the present invention relates to a Switch-Disconnector for use in switching devices. The switch disconnector comprises a pair of housing means for holding different components; a venting means providing exhaust for gas generated; a contact system comprising a pair of terminals connected to load and supply, a leaf spring means giving pressure to said contacts and a magnetic cladding means for enhancing the electro-dynamic forces; an arc quenching system comprising an arc chute assembly to quench the arc generated and a pressure plate to channelize gas generated towards said venting means; a rotor assembly making contact with said terminal for switching operation, said rotor assembly located inside a circular relief provided at center of said housing means; a pair of cylindrical means for holding said housing covers tightly.

No. of Pages : 23 No. of Claims : 10

(12) PATENT APPLICATION PUBLICATION
(19) INDIA
(22) Date of filing of Application :17/09/2012
(21) Application No.2701/MUM/2012 A
(43) Publication Date : 21/03/2014

(54) Title of the invention : QUAD BLOCK APPLIANCE AND METHOD THEREOF

(51) International classification :H04N21/00
(31) Priority Document No :NA
(32) Priority Date :NA
(33) Name of priority country :NA
(86) International Application No :NA
Filing Date :NA
(87) International Publication No :N/A
(61) Patent of Addition to Application Number :NA
Filing Date :NA
(62) Divisional to Application Number :NA
Filing Date :NA

(71)**Name of Applicant :**
1)PAVANKUMAR JANARDAN VIBHUTE
Address of Applicant :OF SHARAD PAWAR DENTAL COLLEGE AND HOSPITAL,SAWANGI(MEGHE), WARDHA-442 004, MAHARASHTRA, INDIA
(72)**Name of Inventor :**
1)PAVANKUMAR JANARDAN VIBHUTE

(57) Abstract :
The present invention relates to apparatus and methods for the correction of skeletal class II malocclusions and/or modifying a temporary bite rising crown in the form of Quad Block appliance.

No. of Pages : 14 No. of Claims : 10

(12) PATENT APPLICATION PUBLICATION
(19) INDIA
(22) Date of filing of Application :17/09/2012
(21) Application No.2702/MUM/2012 A
(43) Publication Date : 21/03/2014

(54) Title of the invention : RETENTION MEASURING APPARATUS FOR MAXILLARY COMPLETE DENTURE AND METHOD THEREOF.

(51) International classification :A61C19/05
(31) Priority Document No :NA
(32) Priority Date :NA
(33) Name of priority country :NA
(86) International Application No :NA
Filing Date :NA
(87) International Publication No :N/A
(61) Patent of Addition to Application Number :NA
Filing Date :NA
(62) Divisional to Application Number :NA
Filing Date :NA

(71)**Name of Applicant :**
1)RAM UPASRAO THOMBARE
Address of Applicant :OF SHARAD PAWAR DENTAL COLLEGE AND HOSPITAL,SAWANGI(MEGHE), WARDHA-442 004, MAHARASHTRA, INDIA
(72)**Name of Inventor :**
1)RAM UPASRAO THOMBARE

(57) Abstract :
The present invention relates to a retention measuring apparatus for artificial maxillary complete dentures in dentistry which gets the relation between a patients artificial complete dentures fabricated by dentist following standard recommended procedure and its function in patients mouth. More particularly, the disclosure relates to a novel apparatus for measuring the accurate values of dislodging force acts on the maxillary complete denture and the method thereof.

No. of Pages : 18 No. of Claims : 7

(12) PATENT APPLICATION PUBLICATION
(19) INDIA
(22) Date of filing of Application :09/03/2012
(21) Application No.634/MUM/2012 A
(43) Publication Date : 21/03/2014

(54) Title of the invention : AN IMPROVED PROCESS FOR TOLVAPTAN

(51) International classification	:A01N43/00	(71)**Name of Applicant :**
(31) Priority Document No	:NA	**1)EMCURE PHARMACEUTICALS LIMITED**
(32) Priority Date	:NA	Address of Applicant :EMCURE HOUSE, T-184, M.I.D.C.,
(33) Name of priority country	:NA	BHOSARI, PUNE-411026, Maharashtra India
(86) International Application No	:NA	(72)**Name of Inventor :**
Filing Date	:NA	**1)GURJAR MUKUND KESHAV**
(87) International Publication No	:N/A	**2)DESHMUKH SANJAY SHANKAR**
(61) Patent of Addition to Application Number	:NA	**3)JOSHI SHANSHIKANT GANGARAM**
Filing Date	:NA	**4)KAMBLE MANGESH GORAKHNATH**
(62) Divisional to Application Number	:NA	**5)GIRASE LAKINDRASINGH JAGATSING**
Filing Date	:NA	**6)MEHTA SAMIT SATISH**

(57) Abstract :
A method for the preparation of tolvaptan comprising , N-acylation of 7-chloro-5-oxo-2,3,4,5-tetrahydro-lH-l-benzazepine with 2-methyl-4-nitrobenzoyl chloride in an organic solvent and in absence of base; followed by reduction of the nitro group with suitable reducing agent to give 7-chloro-l-(4-amino-2-methylbenzoyl)-5-oxo-2,3,4,5-tetrahydro-lH-1-benzazepine, which on acylation with 2-methylbenzoylchloride and reduction with sodium borohydride to give tolvaptan with purity not less than 99.5%.

No. of Pages : 13 No. of Claims : 7

(12) PATENT APPLICATION PUBLICATION
(19) INDIA
(22) Date of filing of Application :21/03/2011
(21) Application No.793/MUM/2011 A
(43) Publication Date : 21/03/2014

(54) Title of the invention : A POSITION LOCKING SYSTEM FOR DRAW OUT TYPE SWITCHGEAR

(51) International classification	:H02B11/00, H02B11/18
(31) Priority Document No	:NA
(32) Priority Date	:NA
(33) Name of priority country	:NA
(86) International Application No	:NA
Filing Date	:NA
(87) International Publication No	: NA
(61) Patent of Addition to Application Number	:NA
Filing Date	:NA
(62) Divisional to Application Number	:NA
Filing Date	:NA

(71)**Name of Applicant :**
1)LARSEN & TOUBRO LIMITED
Address of Applicant :L & T House Ballard Estate Mumbai 400 001 MAHARASHTRA, INDIA
(72)**Name of Inventor :**
1)PATANKAR Shreeyash
2)DONGARE Vishal
3)KHAN Akram

(57) Abstract :
The present invention relates generally to switchgear arrangement and more particularly to a position locking system for draw out type switchgear to lock and unlock movement of switchgear within the drawing space. The invention makes use of wire driven latches to lock and unlock the movement of the switchgear within the drawing space. This technology is used in the switchgear industry and allied areas. system comprising a plurality of wire driven latches, said latch having movement defined by a latch plate; a plurality of slots for engaging said latches within the rails; a shaft having coupling arrangement on its sides; an actuation means to defeat engagement of said latch with said rail; a latch spring configured to push said latch plate in said slot; and an audio indication means to indicate engaging and disengaging of said latch in said slot.

No. of Pages : 21 No. of Claims : 7

(12) PATENT APPLICATION PUBLICATION
(19) INDIA
(22) Date of filing of Application :21/03/2011
(21) Application No.794/MUM/2011 A
(43) Publication Date : 21/03/2014

(54) Title of the invention : IMPROVED MECHANICAL INTERLOCKING ASSEMBLY

(51) International classification	:H01H50/32, H01H9/26
(31) Priority Document No	:NA
(32) Priority Date	:NA
(33) Name of priority country	:NA
(86) International Application No	:NA
Filing Date	:NA
(87) International Publication No	: NA
(61) Patent of Addition to Application Number	:NA
Filing Date	:NA
(62) Divisional to Application Number	:NA
Filing Date	:NA

(71)**Name of Applicant :**
1)LARSEN & TOUBRO LIMITED
Address of Applicant :L & T House Ballard Estate Mumbai 400 001 MAHARASHTRA, INDIA
(72)**Name of Inventor :**
1)KUMAR Santosh
2)BHARAMBE Bhagawat S
3)RATNAM Vivek

(57) Abstract :
The present invention relates to a mutual locking device. More particularly, the invention relates to an improved mechanical interlocking assembly providing interlocking of electromagnetic contactors thereby preventing simultaneous actuation. Said assembly comprising a mechanical interlock means sandwiched between a pair of said electromagnetic contactors; and a pair of locators holding said mechanical interlock means. It provides the advantage of interlocking the contactors without any additional circuitry.

No. of Pages : 11 No. of Claims : 5

(12) PATENT APPLICATION PUBLICATION
(19) INDIA
(22) Date of filing of Application :18/09/2012
(21) Application No.2725/MUM/2012 A
(43) Publication Date : 21/03/2014

(54) Title of the invention : FOOTWEAR PARTS GLUING PROCESS USING POWDER ADHESIVE

(51) International classification :A43B13/00
(31) Priority Document No :NA
(32) Priority Date :NA
(33) Name of priority country :NA
(86) International Application No :NA
Filing Date :NA
(87) International Publication No :N/A
(61) Patent of Addition to Application Number :NA
Filing Date :NA
(62) Divisional to Application Number :NA
Filing Date :NA

(71)**Name of Applicant :**
1)ARTECOLA INDUSTRIAS QUIMICAS LTDA.
Address of Applicant :5801, ROAD RS239, CAMPO BOM, RS, BRAZIL.
(72)**Name of Inventor :**
1)JARDEL LUIZ DE MELLO

(57) Abstract :
A process of gluing footwear parts using a powder adhesive that eliminates the conventional stages of drying required after the application of liquid adhesive to the substrate surface and of cooling to solidify the glue after pressing is disclosed herein. The process comprises the stages of preparing the surface and removing impurities from substrates by applying a slow-drying compound featuring bonding properties; applying the polyurethane-base powder adhesive with a grain size between 30 and 200 microns by dispersing it with pistols removing the excess adhesive; reactivating the powder adhesive applied to the substrate surface at temperatures between 60° and 80°C; joining the substrate surfaces that received the adhesive, and pressing.

No. of Pages : 7 No. of Claims : 3

(12) PATENT APPLICATION PUBLICATION
(19) INDIA
(22) Date of filing of Application :17/02/2012
(21) Application No.444/MUM/2012 A
(43) Publication Date : 21/03/2014

(54) Title of the invention : ISOLATION OF CROSS-LINKED POLYMER SALTS

(51) International classification	:C08G 73/00
(31) Priority Document No	:NA
(32) Priority Date	:NA
(33) Name of priority country	:NA
(86) International Application No	:NA
Filing Date	:NA
(87) International Publication No	:N/A
(61) Patent of Addition to Application Number	:NA
Filing Date	:NA
(62) Divisional to Application Number	:NA
Filing Date	:NA

(71)**Name of Applicant :**
1)EMCURE PHARMACEUTICALS LIMITED
Address of Applicant :EMCURE HOUSE, T-184, M.I.D.C., BHOSARI, PUNE-411026, Maharashtra India
(72)**Name of Inventor :**
1)GURJAR MUKUND KESHAV
2)KRISHNA VIVEK
3)VHORA IMTYAZ
4)MAIKAP GOLAKCHANDRA SUDHARSHAN
5)RAGHOJI RAJESH VENKATRAO
6)MANE VISHAL KISAN
7)MEHTA SAMIT SATISH

(57) Abstract :
A process for isolation of cross-linked polymers containing N or amino, ammonium or spirobicyclic ammonium groups, cationic N-containing groups and suitable counter-ions, by filtration of a slurry containing the polymer into a closed vessel equipped with a sintered bottom and a stirrer, which can be raised or lowered about its axis, removing the mother liquor under pressure and/or vacuum, slurry washing the gel with solvents and drying the semi-dry cake in the same vessel, at the desired temperature in an inert atmosphere.

No. of Pages : 18 No. of Claims : 9

(12) PATENT APPLICATION PUBLICATION
(19) INDIA
(22) Date of filing of Application :18/02/2012
(21) Application No.445/MUM/2012 A
(43) Publication Date : 21/03/2014

(54) Title of the invention : MULTI-ENTITY TEST CASE EXECUTION WORKFLOW

(51) International classification	:G06F 15/16
(31) Priority Document No	:NA
(32) Priority Date	:NA
(33) Name of priority country	:NA
(86) International Application No	:NA
Filing Date	:NA
(87) International Publication No	: NA
(61) Patent of Addition to Application Number	:NA
Filing Date	:NA
(62) Divisional to Application Number	:NA
Filing Date	:NA

(71)**Name of Applicant :**
1)TATA CONSULTANCY SERVICES LIMITED
Address of Applicant :Nirmal Building 9th Floor Nariman Point Mumbai 400021 Maharashtra India
(72)**Name of Inventor :**
1)AUGUSTINE Nisha Ancy
2)RAJU Bhanu

(57) Abstract :
The present subject matter relates to a method for managing a testing workflow, based on execution of at least one Multi Entity Test Case (METC) of the testing workflow. The method includes assigning at least one role to each of a plurality of test steps of the METC, where the at least one role is indicative of a privilege level to execute each of the plurality of test steps. The method also includes defining a failure condition for each of the plurality of test steps, where the failure condition is indicative of an expected result of execution of each of the plurality of test steps. The method further includes specifying a failure action associated with the failure condition for execution of each of the plurality of test steps, executing one of the plurality of test steps, and applying the failure action to proceed with the testing workflow.

No. of Pages : 20 No. of Claims : 10

(12) PATENT APPLICATION PUBLICATION
(19) INDIA
(22) Date of filing of Application :21/03/2011
(21) Application No.795/MUM/2011 A
(43) Publication Date : 21/03/2014

(54) Title of the invention : ENCLOSED SHAFT ARRANGEMENT FOR CIRCUIT BREAKER TO PREVENT SHORT CIRCUIT FAILURE

(51) International classification	:H02J13/00, H01L33/08
(31) Priority Document No	:NA
(32) Priority Date	:NA
(33) Name of priority country	:NA
(86) International Application No	:NA
Filing Date	:NA
(87) International Publication No	: NA
(61) Patent of Addition to Application Number	:NA
Filing Date	:NA
(62) Divisional to Application Number	:NA
Filing Date	:NA

(71)**Name of Applicant :**
1)LARSEN & TOUBRO LIMITED
Address of Applicant :L & T House Ballard Estate Mumbai 400 001 MAHARASHTRA, INDIA
(72)**Name of Inventor :**
1)PHILIP Anoop
2)GUPTA Mukul

(57) Abstract :
The present invention relates to moulded case circuit breakers. More particularly, the present invention relates to an enclosed shaft arrangement for circuit breaker to prevent short circuit failure, mainly moulded case circuit breakers. Arrangement comprising a shaft cover (3) enclosing moving contacts and rotating along with said moving contacts on repulsion during short circuit, said cover substantially cylindrical having a shaft cover flap (5) to facilitate said rotation. It protects the inside components like springs and pins from hot gases and arc products during short circuit arcing.

No. of Pages : 16 No. of Claims : 8

(12) PATENT APPLICATION PUBLICATION
(19) INDIA
(22) Date of filing of Application :19/09/2012
(21) Application No.2730/MUM/2012 A
(43) Publication Date : 21/03/2014

(54) Title of the invention : VIDEO SYNCHRONIZATION

(51) International classification :H04L7/00
(31) Priority Document No :NA
(32) Priority Date :NA
(33) Name of priority country :NA
(86) International Application No :NA
Filing Date :NA
(87) International Publication No : NA
(61) Patent of Addition to Application Number :NA
Filing Date :NA
(62) Divisional to Application Number :NA
Filing Date :NA

(71)**Name of Applicant :**
1)TATA CONSULTANCY SERVICES LIMITED
Address of Applicant :Nirmal Building 9th Floor Nariman Point Mumbai 400021 Maharashtra India
(72)**Name of Inventor :**
1)DHILLON Jyoti

(57) Abstract :
The present subject matter discloses systems and methods for synchronizing a plurality of video files. In one implementation the method comprises detecting a one shot boundary in each of a first video file and a second video file determining a first reference point in the first video and a second reference point in second video based on the shot boundary detection and extracting a plurality of features associated with the reference points. The method further comprises comparing each of the plurality of corresponding features extracted from the reference points in a log-polar domain based in part on normalized cross correlation computing a matching index indicative of the extent of match between the extracted features and generating a notification indicating the synchronization of the first video file and the second video file if the matching index is determined to be greater than a pre-defined matching threshold.

No. of Pages : 22 No. of Claims : 12

(12) PATENT APPLICATION PUBLICATION
(19) INDIA
(22) Date of filing of Application :20/02/2012
(21) Application No.451/MUM/2012 A
(43) Publication Date : 21/03/2014

(54) Title of the invention : A CATALYST SYSTEM FOR PREPARATION OF POLYETHYLENE AND A METHOD OF ITS PREPARATION

(51) International classification :C08F110/02
(31) Priority Document No :NA
(32) Priority Date :NA
(33) Name of priority country :NA
(86) International Application No :NA
Filing Date :NA
(87) International Publication No :N/A
(61) Patent of Addition to Application Number :NA
Filing Date :NA
(62) Divisional to Application Number :NA
Filing Date :NA

(71)**Name of Applicant :**
1)RELIANCE INDUSTRIES LIMITED
Address of Applicant :3RD FLOOR, MAKER CHAMBER - IV, 222, NARIMAN POINT, MUMBAI-400 021, MAHARASHTRA, INDIA
(72)**Name of Inventor :**
1)KAUR SUKHDEEP
2)PATIL HARSHAD RAMDAS
3)GUPTA VIRENDRA KUMAR

(57) Abstract :
The present disclosure provides a catalyst system for polymerization of ethylene. The present disclosure also provides a method of preparation of said catalyst. The catalyst system of the present disclosure comprises a combination of electron donors that regulates the molecular weight of polyethylene and polymerization kinetics.

No. of Pages : 23 No. of Claims : 14

(12) PATENT APPLICATION PUBLICATION
(19) INDIA
(22) Date of filing of Application :21/03/2011

(21) Application No.802/MUM/2011 A
(43) Publication Date : 21/03/2014

(54) Title of the invention : IMPROVED SHAFT COUPLING ARRANGEMENT FOR A MOULDED CASE CIRCUIT BREAKER

(51) International classification	:H01H71/10, H01H1/22
(31) Priority Document No	:NA
(32) Priority Date	:NA
(33) Name of priority country	:NA
(86) International Application No	:NA
Filing Date	:NA
(87) International Publication No	: NA
(61) Patent of Addition to Application Number	:NA
Filing Date	:NA
(62) Divisional to Application Number	:NA
Filing Date	:NA

(71)**Name of Applicant :**
1)LARSEN & TOUBRO LIMITED
Address of Applicant :L & T House Ballard Estate Mumbai 400 001 MAHARASHTRA, INDIA
(72)**Name of Inventor :**
1)PHILIP Anoop
2)GUPTA Mukul

(57) Abstract :
This invention relates generally to circuit breakers and more particularly to a shaft coupling arrangement for a moulded case circuit breaker. A shaft coupling arrangement for a moulded case circuit breaker, said arrangement comprising a protrusion provided on either side of a shaft (503) facilitating coupling between poles. Arrangement as claimed in claim 1 wherein said protrusion on one side is substantially a male protrusion (502) and on other sid is substantially a female protrusion (501).

No. of Pages : 16 No. of Claims : 5

(12) PATENT APPLICATION PUBLICATION
(19) INDIA
(22) Date of filing of Application :21/03/2011
(21) Application No.803/MUM/2011 A
(43) Publication Date : 21/03/2014

(54) Title of the invention : ELECTRONIC MODULE FOR SWITCHING DEVICE TO PREVENT WELDING AND A METHOD THEREOF

(51) International classification	:H05K5/00, H01H29/22
(31) Priority Document No	:NA
(32) Priority Date	:NA
(33) Name of priority country	:NA
(86) International Application No	:NA
Filing Date	:NA
(87) International Publication No	: NA
(61) Patent of Addition to Application Number	:NA
Filing Date	:NA
(62) Divisional to Application Number	:NA
Filing Date	:NA

(71)**Name of Applicant :**
1)LARSEN & TOUBRO LIMITED
Address of Applicant :L & T House Ballard Estate Mumbai 400 001 MAHARASHTRA, INDIA
(72)**Name of Inventor :**
1)SHARMA Priyanka
2)SARASWAT Anvita A.

(57) Abstract :
The present invention relates generally to switching devices. More particularly, the present invention relates to an electronic module for switching device to prevent a contact closure in molten condition thus preventing welding of contacts and a method thereof, method comprising the steps of switching ON a comparator circuit when actual time is greater than pick up time; comparing terminal voltage to a prefixed voltage to sense short circuit using a comparator, on sensing short circuit passing signal to a relay, said signal energizing a relay coil.

No. of Pages : 13 No. of Claims : 10

(12) PATENT APPLICATION PUBLICATION
(19) INDIA
(22) Date of filing of Application :26/03/2011
(21) Application No.910/MUM/2011 A
(43) Publication Date : 21/03/2014

(54) Title of the invention : CONTACT LOCKING SYSTEM HAVING AN INBUILT SIMPLE CAM PROFILE TO FLIP-FLOP

(51) International classification	:H01H9/22, H01H9/28
(31) Priority Document No	:NA
(32) Priority Date	:NA
(33) Name of priority country	:NA
(86) International Application No	:NA
Filing Date	:NA
(87) International Publication No	: NA
(61) Patent of Addition to Application Number	:NA
Filing Date	:NA
(62) Divisional to Application Number	:NA
Filing Date	:NA

(71)**Name of Applicant :**
1)LARSEN & TOUBRO LIMITED
Address of Applicant :L & T House Ballard Estate Mumbai 400 001 MAHARASHTRA, INDIA
(72)**Name of Inventor :**
1)OCHANI Deepak M.;

(57) Abstract :
A contact locking system having an inbuilt simple cam profile to flip-flop assembled in the circuit breaker to enhance the velocity of contact system comprising a rotating member of the circuit breaker mechanism; a drive shaft (1) further including a compression spring (5) placed inside the cavity of drive shaft; a duality of contacts wherein the upper contact (2) is pivoted at pin (3); a spacer (4) placed such that it touches the upper contact and pull is provided by the spring placed in the driveshaft to get the contact pressure. It enhances the velocity of contact system after toggling during fault clearance by circuit breaker while reducing let through energy. Hence the life of circuit breaker against short circuit fault clearance is improved.

No. of Pages : 16 No. of Claims : 9

(12) PATENT APPLICATION PUBLICATION
(19) INDIA
(22) Date of filing of Application :21/08/2012
(21) Application No.2009/MUMNP/2012 A
(43) Publication Date : 21/03/2014

(54) Title of the invention : ANATOMICAL PRESSURE EVENIZING MATTRESS OVERLAY WITH PRESTRESSED CORE AND BAFFLED LATERAL EDGE CORE RESPIRATION

(51) International classification :A47C27/14
(31) Priority Document No :12/657568
(32) Priority Date :21/01/2010
(33) Name of priority country :U.S.A.
(86) International Application No :PCT/US2010/059006
Filing Date :04/12/2010
(87) International Publication No :WO 2011/090562
(61) Patent of Addition to Application Number :NA
Filing Date :NA
(62) Divisional to Application Number :NA
Filing Date :NA

(71)**Name of Applicant :**
1)MJD INNOVATIONS L.L.C.
Address of Applicant :34020 Skyway Drive Scappoose OR 97056 U.S.A.
(72)**Name of Inventor :**
1)DENNIS Casey A.
2)DENNIS Michael R.

(57) Abstract :
An anatomical pressure-evenizing mattress overlay including a dynamic-response core having spaced, upper and lower, surfaces and an intermediate, perimetral edge. The core is formed including a 100% open-cell, compressible and flowable, viscoelastic foam expanse, and possesses a relaxed-state volume which resides in about an 8-10% nominally compressed condition. Load-transmissively bonded to the entire outside of the core, so as to function as a dynamically- responsive unit with it, and possessing a relaxed-state, internal, prestressed, tension condition, is an elastomeric, moisture- and gas-flow-managing coating, including fluid-flow-controlling, baffled, respiration window structure which exposes a portion of the cores edge to accommodate respiration of and for the interior of the core.

No. of Pages : 35 No. of Claims : 15

(12) PATENT APPLICATION PUBLICATION
(19) INDIA
(22) Date of filing of Application :15/02/2012
(21) Application No.411/MUM/2012 A
(43) Publication Date : 21/03/2014

(54) Title of the invention : NOVEL PROCESS FOR THE PREPARATION OF ILAPRAZOLE AND SALTS THEREOF

(51) International classification	:C07D 401/12
(31) Priority Document No	:NA
(32) Priority Date	:NA
(33) Name of priority country	:NA
(86) International Application No	:NA
Filing Date	:NA
(87) International Publication No	:N/A
(61) Patent of Addition to Application Number	:NA
Filing Date	:NA
(62) Divisional to Application Number	:NA
Filing Date	:NA

(71)**Name of Applicant :**
1)CADILA HEALTHCARE LIMITED
Address of Applicant :ZYDUS TOWER, SATELLITE CROSS ROAD, AHMEDABAD-380 015, GUJARAT, INDIA.
(72)**Name of Inventor :**
1)SINGH, MANOJ KUMAR
2)SOLANKI, KIRTIPALSINH
3)VAKHARIYA, CHINTAN
4)MURUGAN, RAMALINGAM
5)N/A

(57) Abstract :
The present invention relates to a novel process for the preparation of Ilaprazole. Further the invention also provides process for the preparation of pharmaceutically acceptable salts of Ilaprazole.

No. of Pages : 35 No. of Claims : 20

(12) PATENT APPLICATION PUBLICATION
(19) INDIA
(22) Date of filing of Application :21/02/2012
(21) Application No.457/MUM/2012 A
(43) Publication Date : 21/03/2014

(54) Title of the invention : PHOTOVOLTAIC MOUNTING APPARATUS AND METHOD OF INSTALLATION.

(51) International classification	:H01L 31/048
(31) Priority Document No	:13/343,183
(32) Priority Date	:04/01/2012
(33) Name of priority country	:U.S.A.
(86) International Application No	:NA
Filing Date	:NA
(87) International Publication No	:N/A
(61) Patent of Addition to Application Number	:NA
Filing Date	:NA
(62) Divisional to Application Number	:NA
Filing Date	:NA

(71)**Name of Applicant :**
1)SOLAR CUBE GMBH
Address of Applicant :BAHNHOFSTRASSE 95 82166 GRAEFELFING, MUNICH GERMANY
(72)**Name of Inventor :**
1)PANAGIOTIS G. BITARCHAS
2)SPYRIDON N. KOTTARAS
3)EMMANOUIL E. VERGETIS

(57) Abstract :
A photovoltaic mounting apparatus includes a mounting frame coupled to a pile capable of being anchored in numerous terrain and slope conditions, universal clamping for mounting any type of solar panel thereto, and components enabling customized angles of inclination of photovoltaic modules mounted onto the frame. Optimized testing and preparation for installation are part of a process ensuring that design of materials and installation of a photovoltaic mounting apparatus is customizable to reduce time and expense in a method of installation.

No. of Pages : 47 No. of Claims : 20

(12) PATENT APPLICATION PUBLICATION
(19) INDIA
(22) Date of filing of Application :23/03/2011
(21) Application No.858/MUM/2011 A
(43) Publication Date : 21/03/2014

(54) Title of the invention : TOPICAL COMPOSITION

(51) International classification	:A61K31/16, A61K45/06
(31) Priority Document No	:NA
(32) Priority Date	:NA
(33) Name of priority country	:NA
(86) International Application No	:NA
Filing Date	:NA
(87) International Publication No	: NA
(61) Patent of Addition to Application Number	:NA
Filing Date	:NA
(62) Divisional to Application Number	:NA
Filing Date	:NA

(71)**Name of Applicant :**
1)CIPLA LIMITED
Address of Applicant :289, BELLASIS ROAD, MUMBAI CENTRAL, MUMBAI - 400 008, Maharashtra India
(72)**Name of Inventor :**
1)MALHOTRA, GEENA
2)PURANDARE, SHRINIVAS MADHUKAR

(57) Abstract :
The present invention relates to topical composition comprising atleast one alkaloid and atleast one antioxidant for the treatment of skin disorders, particularly vitiligo.

No. of Pages : 20 No. of Claims : 10

(12) PATENT APPLICATION PUBLICATION
(19) INDIA
(22) Date of filing of Application :26/03/2011
(21) Application No.912/MUM/2011 A
(43) Publication Date : 21/03/2014

(54) Title of the invention : IMPROVED ARC QUENCHING ARRANGEMENT FOR FASTER ARC QUENCHING IN CIRCUIT BREAKERS

(51) International classification	:H01H33/915, H01H33/90
(31) Priority Document No	:NA
(32) Priority Date	:NA
(33) Name of priority country	:NA
(86) International Application No	:NA
Filing Date	:NA
(87) International Publication No	: NA
(61) Patent of Addition to Application Number	:NA
Filing Date	:NA
(62) Divisional to Application Number	:NA
Filing Date	:NA

(71)**Name of Applicant :**
1)LARSEN & TOUBRO LIMITED
Address of Applicant :L & T House Ballard Estate Mumbai 400 001 MAHARASHTRA, INDIA
(72)**Name of Inventor :**
1)ROY Jibanesh;
2)GADGIL Rohit;
3)NAHATA Deepak P.;

(57) Abstract :
This invention relates generally to circuit breakers. More particularly, the present invention relates to an improved arc quenching arrangement for faster arc quenching in circuit breakers. It provides an arc chute (15); plurality of arc barriers(9A and 10), insulating a fixed and moving contact, said barrier connected optionally to said contacts or a drive shaft, said contacts having a contact button; wherein said barrier mechanism adapted to move in between main contacts during separation of said contacts and move out during closing of said contacts. It provides less erosion of contacts due to insulating arc barrier coming in between the moving contact and fixed contact as they separate.

No. of Pages : 25 No. of Claims : 10

(12) PATENT APPLICATION PUBLICATION
(19) INDIA
(22) Date of filing of Application :15/01/2013
(21) Application No.123/MUMNP/2013 A
(43) Publication Date : 21/03/2014

(54) Title of the invention : PROCESS AND APPARATUS FOR THE INDIRECT GASIFICATION OF BIOMASS USING WATER VAPOR

(51) International classification :C10J3/14,C10B53/02,C10J3/20
(31) Priority Document No :201010234086.6
(32) Priority Date :20/07/2010
(33) Name of priority country :China
(86) International Application No :PCT/CN2011/076843
Filing Date :05/07/2011
(87) International Publication No :WO 2012/010051
(61) Patent of Addition to Application Number :NA
Filing Date :NA
(62) Divisional to Application Number :NA
Filing Date :NA

(71)**Name of Applicant :**
1)WUHAN KAIDI HOLDING INVESTMENT CO. LTD.
Address of Applicant :Kaidi Building T1 Jiangxia Avenue East Lake Hi Tech Development Zone Wuhan Hubei 430223 China
(72)**Name of Inventor :**
1)CHEN Yilong
2)ZHANG Yanfeng
3)TANG Hongming

(57) Abstract :
A process for the indirect gasification of biomass using water vapor. The process uses superheated water vapor as an oxidizer and an energy carrier. First, in a gasification furnace at a temperature between 1,200 and 1,600°C, biomass fuel undergoes dehydration, separation of volatile components, cracking and gasification reaction, thus forming a tar-free crude synthetic gas, which is then chilled and quenched in a spray tower, rapidly dropping the temperature to between 650 and 800 °C, thus obtaining an initial synthetic gas free of molten slag and alkali metal oxide. Finally, the initial synthetic gas is subjected to a sequence of cooling, dust removal, acid removal and dehydration processes, thereby obtaining pure synthetic gas of high quality. Also provided is an apparatus for implementing the process. The process is easy to control, has low energy consumption, and is inexpensive. The synthetic gas produced has a high heating value and is free of tar and alkali metal oxide.

No. of Pages : 20 No. of Claims : 10

(12) PATENT APPLICATION PUBLICATION
(19) INDIA
(22) Date of filing of Application :15/02/2012
(21) Application No.415/MUM/2012 A
(43) Publication Date : 21/03/2014

(54) Title of the invention : MOUTH DISPERSABLE SILDENAFIL LOZENGES - AND A METHOD OF MAKING THEREOF

(51) International classification	:A61K 31/505
(31) Priority Document No	:NA
(32) Priority Date	:NA
(33) Name of priority country	:NA
(86) International Application No	:NA
Filing Date	:NA
(87) International Publication No	:N/A
(61) Patent of Addition to Application Number	:NA
Filing Date	:NA
(62) Divisional to Application Number	:NA
Filing Date	:NA

(71)**Name of Applicant :**
1)M/S. AANJANEYA LIFE CARE LIMITED
Address of Applicant :AANJANEYA HOUSE, PLOT NO.34, POSTAL COLONY, CHEMBUR, MUMBAI-400 071 Maharashtra India
(72)**Name of Inventor :**
1)KANNAN VISHWANATH

(57) Abstract :
Sildenafil Citrate is the first significant oral medication for the treatment of Erectile Dysfunction (ED).

No. of Pages : 10 No. of Claims : 1

(12) PATENT APPLICATION PUBLICATION
(19) INDIA
(22) Date of filing of Application :24/03/2011
(21) Application No.870/MUM/2011 A
(43) Publication Date : 21/03/2014

(54) Title of the invention : SYSTEM AND METHOD ENABLING BUNDLING OF MULTIPLE PRODUCT SLAS INTO A COMPREHENSIVE SUPPORT SLA

(51) International classification	:G06F15/173, G06F15/16
(31) Priority Document No	:NA
(32) Priority Date	:NA
(33) Name of priority country	:NA
(86) International Application No	:NA
Filing Date	:NA
(87) International Publication No	: NA
(61) Patent of Addition to Application Number	:NA
Filing Date	:NA
(62) Divisional to Application Number	:NA
Filing Date	:NA

(71)**Name of Applicant :**
1)TATA CONSULTANCY SERVICES LIMITED
Address of Applicant :NIRMAL BUILDING, 9TH FLOOR, NARIMAN POINT, MUMBAI 400021, MAHARASHTRA, INDIA
(72)**Name of Inventor :**
1)SAMANTRAY DEBASIS
2)NARAYANAN GANAPATHY

(57) Abstract :
The present invention provides a system and method for bundling of support terms for multiple open source products with different Service Level Agreements (SLAS) into a single SLA. Further, the proposed system provides a single window support for users of multiple open source software products which is a bundled premium support where a set of products used by a customer are bundled into a single support agreement with a comprehensive Service Level Agreement (SLA), instead of multiple, individual product based SLAs. Also, the proposed method is capable of generating comprehensive Service Level Agreements (SLAs) for various products and customers by considering various factors like Resource master register, Resource loading information, Resource maturity, open source product register, Historical information etc.

No. of Pages : 24 No. of Claims : 20

(12) PATENT APPLICATION PUBLICATION
(19) INDIA
(22) Date of filing of Application :28/03/2011
(21) Application No.927/MUM/2011 A
(43) Publication Date : 21/03/2014

(54) Title of the invention : IMPROVED LATCH MECHANISM FOR USE IN CIRCUIT BREAKERS

(51) International classification	:H01H71/50, H01H71/12
(31) Priority Document No	:NA
(32) Priority Date	:NA
(33) Name of priority country	:NA
(86) International Application No	:NA
Filing Date	:NA
(87) International Publication No	: NA
(61) Patent of Addition to Application Number	:NA
Filing Date	:NA
(62) Divisional to Application Number	:NA
Filing Date	:NA

(71)**Name of Applicant :**
1)LARSEN & TOUBRO LIMITED
Address of Applicant :L & T House Ballard Estate Mumbai 400 001 MAHARASHTRA, INDIA
(72)**Name of Inventor :**
1)DONGRE Nilesh Suresh;

(57) Abstract :
An improved latch mechanism for use in a circuit breaking device, comprises of a main latch, a latch bracket, an upper link and a lower link, a resetting pin, a floating pin, a tension spring, a drive shaft that separates a pair of contacts upon flow of fault current, preventing the circuits from damage due to fault current. In the present invention, Profile of main latch of mechanism having features which utilizes applied forces with maximum efficiency without loss.

No. of Pages : 19 No. of Claims : 6

(12) PATENT APPLICATION PUBLICATION
(19) INDIA
(22) Date of filing of Application :28/03/2011
(21) Application No.928/MUM/2011 A
(43) Publication Date : 21/03/2014

(54) Title of the invention : ILLUMINATION DEVICE FOR DISTRIBUTION BOARD

(51) International classification	:F21V3/00, F21S8/10, F21V5/00
(31) Priority Document No	:NA
(32) Priority Date	:NA
(33) Name of priority country	:NA
(86) International Application No	:NA
Filing Date	:NA
(87) International Publication No	: NA
(61) Patent of Addition to Application Number	:NA
Filing Date	:NA
(62) Divisional to Application Number	:NA
Filing Date	:NA

(71)**Name of Applicant :**
1)LARSEN & TOUBRO LIMITED
Address of Applicant :L & T House Ballard Estate Mumbai 400 001 MAHARASHTRA, INDIA
(72)**Name of Inventor :**
1)JETHLIYA Rajesh;
2)DESHMUKH Vinod Y.;
3)SUGGU Santosh Kumar;

(57) Abstract :
This invention relates generally to an illuminating device and more particularly to an illumination device for distribution board to operate modular devices in dark. It comprises a protection shield with said distribution board for housing the illumination device; a switch operatively connected to door of said distribution board; a plurality of LEDs connected in series; a reflector to divert light of said LEDs to said distribution board; and an electronic circuit coupled on a printed circuit board to sense illumination inside said distribution board, said electronic circuit comprising a light dependent resistor connected in series with said LEDs, etc.

No. of Pages : 13 No. of Claims : 13

(12) PATENT APPLICATION PUBLICATION
(19) INDIA
(22) Date of filing of Application :11/06/2012
(21) Application No.1453/MUMNP/2012 A
(43) Publication Date : 21/03/2014

(54) Title of the invention : METHOD AND APPARATUS FOR GENERATING MULTIMEDIA STREAM FOR 3-DIMENSIONAL REPRODUCTION OF ADDITIONAL VIDEO REPRODUCTION INFORMATION, AND METHOD AND APPARATUS FOR RECEIVING MULTIMEDIA STREAM FOR 3-DIMENSIONAL REPRODUCTION OF ADDITIONAL VIDEO REPRODUCTION INFORMATION

(51) International classification :H04N 7/24
(31) Priority Document No :61/260,893
(32) Priority Date :13/11/2009
(33) Name of priority country :U.S.A.
(86) International Application No :PCT/KR2010/008066
Filing Date :15/11/2010
(87) International Publication No :WO/2011/059289
(61) Patent of Addition to Application Number :NA
Filing Date :NA
(62) Divisional to Application Number :NA
Filing Date :NA

(71)**Name of Applicant :**
1)SAMSUNG ELECTRONICS CO. LTD.
Address of Applicant :129, Samsung-ro, Yeongtong-gu, Suwon-si, Gyeonggi-do 443-742, Republic of Korea
(72)**Name of Inventor :**
1)LEE Dae-Jong
2)JUNG Kil-Soo
3)KIM Jae-Han
4)CHO Bong-Je
5)KIM Yong-Tae
6)KIM Jae-Seung
7)PARK Hong-Seok

(57) Abstract :
A multimedia stream generating method for 3-dimensional (3D) reproduction of additional reproduction information is provided, the method includes generating a video elementary stream (ES), an audio ES, an additional data stream, and an ancillary information stream that respectively comprise video data, audio data related to the video data, data of additional reproduction information which is to be reproduced together with the video data on a display screen, and additional reproduction information depth information used for 3D reproduction of the additional reproduction information.

No. of Pages : 149 No. of Claims : 15

(12) PATENT APPLICATION PUBLICATION
(19) INDIA
(22) Date of filing of Application :17/08/2012
(21) Application No.1980/MUMNP/2012 A
(43) Publication Date : 21/03/2014

(54) Title of the invention : MULTI-USER UPLINK COMMUNICATION USING EDCA WITH POLLING

(51) International classification :H04W74/06, H04W74/08
(31) Priority Document No :61/312,116
(32) Priority Date :09/03/2010
(33) Name of priority country :U.S.A.
(86) International Application No :PCT/US2011/027782
Filing Date :09/03/2011
(87) International Publication No : NA
(61) Patent of Addition to Application Number :NA
Filing Date :NA
(62) Divisional to Application Number :NA
Filing Date :NA

(71)**Name of Applicant :**
1)QUALCOMM INCORPORATED
Address of Applicant :Attn: International IP Administration 5775 Morehouse Drive San Diego California 92121-1714 U.S.A.
(72)**Name of Inventor :**
1)ABRAHAM Santosh Paul
2)SAMPATH Hemanth
3)MERLIN Simone
4)WENTINK Maarten Menzo

(57) Abstract :
Simultaneous, multi-user uplink communication is scheduled in a wireless network (100) by transmitting a poll message (411) to a plurality of access terminals (403-406) in response to receiving a first request to transmit data (410) via uplink. The poll message (411) includes a solicitation for requests to transmit data from each of the plurality of access terminals (403-406). The poll message (411) also includes a medium reservation and schedule for transmission of the requests from the access terminals. Based on the requests received from the access terminals, a number of the access terminals (403,404) are selected for simultaneous transmission of data (418, 419) via uplink. A transmit start message (416) is sent to each of the selected access terminals (403, 404) indicating when and for how long the selected access terminals (403, 404) may transmit data via uplink. After the data (418, 419) is received, a , block ACK message (422, 423) is sent to each of the selected access terminals (418,419) indicating successful simultaneous communication.

No. of Pages : 45 No. of Claims : 37

(12) PATENT APPLICATION PUBLICATION
(19) INDIA
(22) Date of filing of Application :21/02/2012
(21) Application No.463/MUM/2012 A
(43) Publication Date : 21/03/2014

(54) Title of the invention : UNIVERSAL DATA TRANSFORMATION TOOL.

(51) International classification	:G06F 17/00
(31) Priority Document No	:NA
(32) Priority Date	:NA
(33) Name of priority country	:NA
(86) International Application No	:NA
Filing Date	:NA
(87) International Publication No	:N/A
(61) Patent of Addition to Application Number	:NA
Filing Date	:NA
(62) Divisional to Application Number	:NA
Filing Date	:NA

(71)**Name of Applicant :**
1)TATA CONSULTANCY SERVICES LIMITED
Address of Applicant :NIRMAL BUILDING, 9TH FLOOR, NARIMAN POINT, MUMBAI 400021, MAHARASHTRA, INDIA
(72)**Name of Inventor :**
1)NEMA, BABU SHASHIKUMAR
2)SUBRAMANYA, RAGHAVENDRA BASRUR
3)THOMAS, BIJU KAYYALAKKAL
4)NAGARJUNA, IRAGAM

(57) Abstract :
The present invention relates to a system and method for transforming a legacy data format into a standardized data in compliance to a target data standard using a data transformation tool. Further, the invention provides the method for enabling the said data transformation tool for automatically and dynamically generating a conversion program, wherein the said conversion program is generated on the basis of mapping specifications between multiple source schemas and target schema.

No. of Pages : 27 No. of Claims : 8

(12) PATENT APPLICATION PUBLICATION
(19) INDIA
(22) Date of filing of Application :28/03/2011
(21) Application No.929/MUM/2011 A
(43) Publication Date : 21/03/2014

(54) Title of the invention : IMPROVED STARTER ASSEMBLY

(51) International classification	:B62M7/00	(71)**Name of Applicant :**
(31) Priority Document No	:NA	**1)LARSEN & TOUBRO LIMITED**
(32) Priority Date	:NA	Address of Applicant :L & T House Ballard Estate Mumbai 400 001 MAHARASHTRA, INDIA
(33) Name of priority country	:NA	(72)**Name of Inventor :**
(86) International Application No	:NA	**1)CHATTOPADHYAY Biplab;**
Filing Date	:NA	**2)KHEDEKAR Abhishek G.;**
(87) International Publication No	: NA	**3)NATH Subhasish;**
(61) Patent of Addition to Application Number	:NA	
Filing Date	:NA	
(62) Divisional to Application Number	:NA	
Filing Date	:NA	

(57) Abstract :
This invention relates generally to a starter assembly. More particularly the invention relates to an improved starter assembly. An improved starter assembly comprising a star contactor (1); a delta contactor (2); a relay (3); a hold on contactor (4); a timer (5); and a plurality of terminal blocks (6,7,8); wherein said assembly is horizontally positioned and said terminal block (8) is adapted to perform switching operation and providing supply for actuation of external devices. Invention provides a starter having reduced height.

No. of Pages : 11 No. of Claims : 9

(12) PATENT APPLICATION PUBLICATION
(19) INDIA
(22) Date of filing of Application :20/03/2011
(21) Application No.167/MUM/2011 A
(43) Publication Date : 21/03/2014

(54) Title of the invention : AMORPHOUS FORM OF VILAZODONE HYDROCHLORIDE AND PROCESS FOR ITS PREPARATION

(51) International classification	:C07D405/14, A61K31/404
(31) Priority Document No	:NA
(32) Priority Date	:NA
(33) Name of priority country	:NA
(86) International Application No	:NA
Filing Date	:NA
(87) International Publication No	: NA
(61) Patent of Addition to Application Number	:NA
Filing Date	:NA
(62) Divisional to Application Number	:NA
Filing Date	:NA

(71)**Name of Applicant :**
1)CADILA HEALTHCARE LIMITED
Address of Applicant :PLOT NO. 26 TO 29 & 31, DABHASA-UMARAYA ROAD, VILL. DABHASA- 391440 TAL. PADRA, DIST. VADODARA, GUJARAT, INDIA.
(72)**Name of Inventor :**
1)DWIVEDI SHRIPRAKASH DHAR
2)SINGH RAMESH CHANDRA
3)RAVAL JIGAR MUKUNDBHAI

(57) Abstract :
The present invention relates to an amorphous form of vilazodone hydrochloride and process for the preparation of amorphous form of vilazodone hydrochloride. The invention also relates to pharmaceutical compositions that include a therapeutically effective amount of the amorphous form of vilazodone hydrochloride and use of said compositions for the treatment of major depressive disorder (MDD).

No. of Pages : 22 No. of Claims : 36

(12) PATENT APPLICATION PUBLICATION
(19) INDIA
(22) Date of filing of Application :17/08/2012
(21) Application No.1979/MUMNP/2012 A
(43) Publication Date : 21/03/2014

(54) Title of the invention : SYSTEM AND METHOD OF DISPLAYING GRAPHICAL USER INTERFACE OBJECTS

(51) International classification :G06F 3/048,G06F 9/44
(31) Priority Document No :61/312,117
(32) Priority Date :09/03/2010
(33) Name of priority country :U.S.A.
(86) International Application No :PCT/US2011/024973
Filing Date :16/02/2011
(87) International Publication No :WO/2011/112323
(61) Patent of Addition to Application Number :NA
Filing Date :NA
(62) Divisional to Application Number :NA
Filing Date :NA

(71)**Name of Applicant :**
1)QUALCOMM INCORPORATED
Address of Applicant :Attn: International IP Administration 5775 Morehouse Drive San Diego California 92121-1714 U.S.A.
(72)**Name of Inventor :**
1)HORODEZKY Samuel J.
2)TSOI Kam-Cheong Anthony
3)BRUCE Kate

(57) Abstract :
A method of displaying graphical user interface objects is disclosed and may include displaying a GUI object menu on a display and displaying a wrinkled portion at at least one an end of the GUI object menu. The wrinkle indicator may indicate that one or more GUI objects are available off screen at an edge of the display adjacent to the wrinkle indicator.

No. of Pages : 51 No. of Claims : 56

(12) PATENT APPLICATION PUBLICATION
(19) INDIA
(22) Date of filing of Application :10/03/2011
(21) Application No.666/MUM/2011 A
(43) Publication Date : 21/03/2014

(54) Title of the invention : AN IMPROVED ARRANGEMENT OF SAFETY SHUTTER AT TERMINATION IN MODULAR DEVICES

(51) International classification	:H02B11/24, H02B11/12
(31) Priority Document No	:NA
(32) Priority Date	:NA
(33) Name of priority country	:NA
(86) International Application No	:NA
Filing Date	:NA
(87) International Publication No	: NA
(61) Patent of Addition to Application Number	:NA
Filing Date	:NA
(62) Divisional to Application Number	:NA
Filing Date	:NA

(71)**Name of Applicant :**
1)LARSEN & TOUBRO LIMITED
Address of Applicant :L & T House Ballard Estate Mumbai 400 001 MAHARASHTRA, INDIA
(72)**Name of Inventor :**
1)JETHLIYA Rajesh;
2)JAMDAR Dinesh;
3)SAMRIT Yogini;

(57) Abstract :
This invention relates generally to a modular device and more particularly to an improved arrangement of safety shutter at termination in modular devices. Safety shutter comprising an insulation paper strip placed over a box clamp; movement of said insulation paper strip guided by a slot provided in housing and cover; said shutter covering a gap below said box clamp. A method of providing safety using a safety shutter at termination in modular devices comprising the steps of tightening the screw resulting in lifting of box clamp, said box clamp taking insulation paper strip along with; movement of said insulation paper strip guided by a slot provided in both housing and cover. It is a cost effective solution.

No. of Pages : 14 No. of Claims : 6

(12) PATENT APPLICATION PUBLICATION
(19) INDIA
(22) Date of filing of Application :24/03/2011

(21) Application No.876/MUM/2011 A
(43) Publication Date : 21/03/2014

(54) Title of the invention : A SHIELDED FLUX SHIFT DEVICE ASSEMBLY FOR USE IN CIRCUIT BREAKERS

(51) International classification	:H01H71/32, H01H71/26, H01H71/10
(31) Priority Document No	:NA
(32) Priority Date	:NA
(33) Name of priority country	:NA
(86) International Application No	:NA
Filing Date	:NA
(87) International Publication No	: NA
(61) Patent of Addition to Application Number	:NA
Filing Date	:NA
(62) Divisional to Application Number	:NA
Filing Date	:NA

(71)**Name of Applicant :**
1)LARSEN & TOUBRO LIMITED
Address of Applicant :L & T House Ballard Estate Mumbai 400 001 MAHARASHTRA, INDIA
(72)**Name of Inventor :**
1)OCHANI Deepak M.;

(57) Abstract :
This invention relates generally to a flux shift device to be used in circuit breakers and more particularly to a shielded flux shift device assembly for use in circuit breakers to be assembled in the release assembly comprising a shield assembly to prevent electromagnetic flux reaching FSD and a thin insulation tape wound over the FSD. Breaking capacity of the circuit breaker can be upgraded without major redesign thus saving design/tooling and execution cost. Also the existing components can be re-used. The new components are easy to manufacture and process. The shielded FSD can be adapted for any circuit breaker (ready solution for circuit breakers with very high breaking capacity). The life of the FSD is enhanced. The total dimension of the upgraded circuit breaker remains same as earlier.

No. of Pages : 14 No. of Claims : 7

(12) PATENT APPLICATION PUBLICATION
(19) INDIA
(22) Date of filing of Application :28/03/2011
(21) Application No.931/MUM/2011 A
(43) Publication Date : 21/03/2014

(54) Title of the invention : RIB CAGE ASSEMBLY FOR DISTRIBUTION BOARD

(51) International classification	:H02B1/015, H02B1/04
(31) Priority Document No	:NA
(32) Priority Date	:NA
(33) Name of priority country	:NA
(86) International Application No	:NA
Filing Date	:NA
(87) International Publication No	: NA
(61) Patent of Addition to Application Number	:NA
Filing Date	:NA
(62) Divisional to Application Number	:NA
Filing Date	:NA

(71)**Name of Applicant :**
1)LARSEN & TOUBRO LIMITED
Address of Applicant :L & T House Ballard Estate Mumbai 400 001 MAHARASHTRA, INDIA
(72)**Name of Inventor :**
1)JETHLIYA Rajesh;
2)SUGGU Santosh Kumar;

(57) Abstract :
This invention relates generally to distribution boards used in electrical network. More particularly present invention relates to a rib cage assembly for distribution board enabling a minimum wall width. Assembly comprising plurality of bars (7) having external ribs across entire length; plurality of panes (6); plurality of construction materials wherein said rib cage assembly adapted to hold construction materials. Present invention saves the civil material (Bricks, Mortar etc.) required for construction of the wall.

No. of Pages : 13 No. of Claims : 8

(12) PATENT APPLICATION PUBLICATION
(19) INDIA
(22) Date of filing of Application :15/01/2013
(21) Application No.124/MUMNP/2013 A
(43) Publication Date : 21/03/2014

(54) Title of the invention : PROCESS FOR THE PREPARATION OF SURFACE TREATED CALCIUM CARBONATE MATERIAL AND USE OF SAME IN THE CONTROL OF ORGANIC MATERIAL IN AN AQUEOUS MEDIUM

(51) International classification :C09C1/02,C02F1/68
(31) Priority Document No :10170110.0
(32) Priority Date :20/07/2010
(33) Name of priority country :EPO
(86) International Application No :PCT/EP2011/061869
Filing Date :12/07/2011
(87) International Publication No :WO 2012/010466
(61) Patent of Addition to Application Number :NA
Filing Date :NA
(62) Divisional to Application Number :NA
Filing Date :NA

(71)**Name of Applicant :**
1)OMYA DEVELOPMENT AG
Address of Applicant :Baslerstrasse 42 CH 4665 Oftringen Switzerland
(72)**Name of Inventor :**
1)BURI Matthias
2)RENTSCH Samuel
3)GANE Patrick A.C.
4)GANTENBEIN Daniel
5)SCHOELKOPF Joachim

(57) Abstract :
The present invention relates to a process for the production of a surface treated calcium carbonate the use of this surface treated calcium carbonate in a process for the control of organic material in an aqueous medium as well as to a composite of surface treated calcium carbonate and organic material such as a composite of surface treated calcium carbonate and to the use of such a composite.

No. of Pages : 31 No. of Claims : 28

(12) PATENT APPLICATION PUBLICATION
(19) INDIA
(22) Date of filing of Application :24/03/2011
(21) Application No.877/MUM/2011 A
(43) Publication Date : 21/03/2014

(54) Title of the invention : AN IMPROVED ARC CHUTE ASSEMBLY FOR USE IN CIRCUIT BREAKERS

(51) International classification	:H01H9/36, H01H33/18, H01H33/00
(31) Priority Document No	:NA
(32) Priority Date	:NA
(33) Name of priority country	:NA
(86) International Application No	:NA
Filing Date	:NA
(87) International Publication No	: NA
(61) Patent of Addition to Application Number	:NA
Filing Date	:NA
(62) Divisional to Application Number	:NA
Filing Date	:NA

(71)**Name of Applicant :**
1)LARSEN & TOUBRO LIMITED
Address of Applicant :L & T House Ballard Estate Mumbai 400 001 MAHARASHTRA, INDIA
(72)**Name of Inventor :**
1)CHOWDHURY Partha;

(57) Abstract :
This invention relates generally to circuit breakers. More particularly the present invention relates to an improved arc chute assembly for use in circuit breakers providing better arc quenching, said assembly comprising a plurality of de-ion plates; a cooling system comprising a plurality of cooling plates and a plurality of springs, said cooling system mounted on said de-ion plates and a cover means placed on top of said cooling system. It provides better arc quenching thereby improving life of circuit breaker.

No. of Pages : 12 No. of Claims : 5

(12) PATENT APPLICATION PUBLICATION
(19) INDIA
(22) Date of filing of Application :24/03/2011
(21) Application No.878/MUM/2011 A
(43) Publication Date : 21/03/2014

(54) Title of the invention : IMPROVED VARIABLE INDUCTION COIL MECHANISM

(51) International classification	:H01F21/00, H01F21/06
(31) Priority Document No	:NA
(32) Priority Date	:NA
(33) Name of priority country	:NA
(86) International Application No	:NA
Filing Date	:NA
(87) International Publication No	: NA
(61) Patent of Addition to Application Number	:NA
Filing Date	:NA
(62) Divisional to Application Number	:NA
Filing Date	:NA

(71)**Name of Applicant :**
1)LARSEN & TOUBRO LIMITED
Address of Applicant :L & T House Ballard Estate Mumbai 400 001 MAHARASHTRA, INDIA
(72)**Name of Inventor :**
1)DAVE Mahendra C.;
2)BURA Virender Singh;
3)BINZANI Pooja;

(57) Abstract :
This invention relates generally to induction coil mechanism and more particularly to an improved variable induction coil mechanism providing a wide range of continuous inductance values. Mechanism comprising a plurality of inductor coils connected in series, said coils stacked closely thereby providing mutual induction. It provides advantage of providing varying inductance over a wide range of continuous values. The mechanism is more compact and easily accessible for maintenance.

No. of Pages : 11 No. of Claims : 4

(12) PATENT APPLICATION PUBLICATION
(19) INDIA
(22) Date of filing of Application :24/03/2011
(21) Application No.879/MUM/2011 A
(43) Publication Date : 21/03/2014

(54) Title of the invention : IMPROVED AUTOMATIC CHANGEOVER MECHANISM FOR FUSE TESTING AND A METHOD THEREOF

(51) International classification	:H01H9/26, H01H85/00
(31) Priority Document No	:NA
(32) Priority Date	:NA
(33) Name of priority country	:NA
(86) International Application No	:NA
Filing Date	:NA
(87) International Publication No	: NA
(61) Patent of Addition to Application Number	:NA
Filing Date	:NA
(62) Divisional to Application Number	:NA
Filing Date	:NA

(71)**Name of Applicant :**
1)LARSEN & TOUBRO LIMITED
Address of Applicant :L & T House Ballard Estate Mumbai 400 001 MAHARASHTRA, INDIA
(72)**Name of Inventor :**
1)BURA Virender Singh;
2)PHADKE Pushkar A.;
3)BORATE Somnath V.;

(57) Abstract :
This invention relates generally to a mechanism and method for fuse testing. More particularly the present invention relates to an improved automatic changeover mechanism for use in fuse testing adapted to reduce testing time and providing a precise result and a method thereof. The mechanism comprises a voltage source passing a test voltage for a short duration; a logic circuitry for sensing excess current, said circuitry providing actuation signal for automatic changeover; a rated voltage source providing rated constant current on getting actuation signal from said logic circuitry.

No. of Pages : 12 No. of Claims : 8

(12) PATENT APPLICATION PUBLICATION
(19) INDIA
(22) Date of filing of Application :28/03/2011
(21) Application No.934/MUM/2011 A
(43) Publication Date : 21/03/2014

(54) Title of the invention : VARIABLE OVERLOAD TRIPPING SYSTEM FOR MOULDED CASE CIRCUIT BREAKER HAVING BIMETALLIC ARRANGEMENT

(51) International classification	:H01H71/74, H01H73/22
(31) Priority Document No	:NA
(32) Priority Date	:NA
(33) Name of priority country	:NA
(86) International Application No	:NA
Filing Date	:NA
(87) International Publication No	: NA
(61) Patent of Addition to Application Number	:NA
Filing Date	:NA
(62) Divisional to Application Number	:NA
Filing Date	:NA

(71)**Name of Applicant :**
1)LARSEN & TOUBRO LIMITED
Address of Applicant :L & T House Ballard Estate Mumbai 400 001 MAHARASHTRA, INDIA
(72)**Name of Inventor :**
1)AGRAWAL Alok;
2)KHARADE Varsha K.;
3)DONGRE Nilesh S.;

(57) Abstract :
The present invention relates generally to a moulded case circuit breaker (MCCB) and more particularly to a variable overload tripping system for moulded case circuit breaker having bimetallic arrangement. It comprises a current carrying element (1); a bimetallic strip means (2) joined at its one to the current carrying element (1) and plurality of adjusting elements engaged with the current carrying element (1) and strip means (2).

No. of Pages : 19 No. of Claims : 7

(12) PATENT APPLICATION PUBLICATION
(19) INDIA
(22) Date of filing of Application :20/02/2012
(21) Application No.450/MUM/2012 A
(43) Publication Date : 21/03/2014

(54) Title of the invention : NOVEL POLYMORPHS OF AZILSARTAN MEDOXOMIL POTASSIUM

(51) International classification	:C07H 19/052
(31) Priority Document No	:NA
(32) Priority Date	:NA
(33) Name of priority country	:NA
(86) International Application No	:NA
Filing Date	:NA
(87) International Publication No	: NA
(61) Patent of Addition to Application Number	:NA
Filing Date	:NA
(62) Divisional to Application Number	:NA
Filing Date	:NA

(71)**Name of Applicant :**
1)Alembic Pharmaceuticals Limited
Address of Applicant :Alembic Research Centre Alembic Pharmaceuticals Limited Alembic Road Vadodara-390003 Gujarat India.
(72)**Name of Inventor :**
1)RAMAN Jayaraman Venkat
2)BALAJI Sundara Kalyana
3)RATHOD Dhiraj
4)B. S. Natarajan
5)AMIN Pinal

(57) Abstract :
The present invention describes novel forms of Azilsartan mcdoxomil potassium (Formula I), process for their preparation and pharmaceutical compositions containing them. More particularly, the present invention revels new polymorph of Azilsartan medoxomil potassium process of preparing them and various pharmaceutical composition containing them.

No. of Pages : 28 No. of Claims : 29

(12) PATENT APPLICATION PUBLICATION
(19) INDIA
(22) Date of filing of Application :21/03/2011
(21) Application No.800/MUM/2011 A
(43) Publication Date : 21/03/2014

(54) Title of the invention : IMPROVED ARRANGEMENT IN BREAKER FOR BETTER QUENCHING OF SHORT CIRCUIT CONDITION

(51) International classification	:H01H33/76, H01H33/20
(31) Priority Document No	:NA
(32) Priority Date	:NA
(33) Name of priority country	:NA
(86) International Application No	:NA
Filing Date	:NA
(87) International Publication No	: NA
(61) Patent of Addition to Application Number	:NA
Filing Date	:NA
(62) Divisional to Application Number	:NA
Filing Date	:NA

(71)**Name of Applicant :**
1)LARSEN & TOUBRO LIMITED
Address of Applicant :L & T House Ballard Estate Mumbai 400 001 MAHARASHTRA, INDIA
(72)**Name of Inventor :**
1)JAMDAR Dinesh

(57) Abstract :
This invention relates generally to a circuit breaker and more particularly to an improved arrangement in circuit breaker for better quenching of short circuit condition. An improved arrangement in circuit breaker for better quenching of short circuit condition, said arrangement comprising atleast one arc runner, said arc runner having duality of limbs forming a unique profile; atleast one moving contact; atleast one fix contact runner; atleast one arc chute chamber; atleast one arc runner insulation means; wherein said arc runner adapted to move arc faster in said arc chute chamber reducing arcing time.

No. of Pages : 15 No. of Claims : 7

(12) PATENT APPLICATION PUBLICATION
(19) INDIA
(22) Date of filing of Application :21/03/2011
(21) Application No.801/MUM/2011 A
(43) Publication Date : 21/03/2014

(54) Title of the invention : IMPROVED MECHANISM FOR CIRCUIT BREAKERS

(51) International classification :H01H71/10
(31) Priority Document No :NA
(32) Priority Date :NA
(33) Name of priority country :NA
(86) International Application No :NA
Filing Date :NA
(87) International Publication No : NA
(61) Patent of Addition to Application Number :NA
Filing Date :NA
(62) Divisional to Application Number :NA
Filing Date :NA

(71)**Name of Applicant :**
1)LARSEN & TOUBRO LIMITED
Address of Applicant :L & T House Ballard Estate Mumbai 400 001 MAHARASHTRA, INDIA
(72)**Name of Inventor :**
1)L. Arvind Kumar
2)N. Prabhu

(57) Abstract :
This invention relates generally to a circuit breaker. More particularly, the present invention relates to an improved operating mechanism for Moulded case circuit breakers. An improved mechanism for a circuit breaker comprising a knob attached to a knob pin sliding in a slot provided in a side plate; a latch link hinged to a side plate using a latch link pin, said latch link stopped in trip position using said knob pin; an operating link connected to said latch link using a rivet pin; a drive link connected to side plate using a connecting pin, said drive link having a pair of pin connector; a main spring connected between said knob pin and a spring pin; a trip system comprising a latch bracket holding a latch link using a latch bracket pin.

No. of Pages : 17 No. of Claims : 7

(12) PATENT APPLICATION PUBLICATION
(19) INDIA
(22) Date of filing of Application :29/03/2011
(21) Application No.957/MUM/2011 A
(43) Publication Date : 21/03/2014

(54) Title of the invention : A COMBINATION OF ZINC TRIVALENT COATED STEEL EN1 MATERIAL PISTON WITH ALUMINIUM WHEEL CYLINDER

(51) International classification	:C23C22/33, C23C28/00
(31) Priority Document No	:NA
(32) Priority Date	:NA
(33) Name of priority country	:NA
(86) International Application No	:NA
Filing Date	:NA
(87) International Publication No	: NA
(61) Patent of Addition to Application Number	:NA
Filing Date	:NA
(62) Divisional to Application Number	:NA
Filing Date	:NA

(71)**Name of Applicant :**
1)TATA MOTORS LIMITED
Address of Applicant :Bombay House 24 Homi Mody Street Hutatma Chowk Mumbai 400 001 Maharashtra INDIA
(72)**Name of Inventor :**
1)Badal G Bisen
2)M. Somanathan

(57) Abstract :
Instant disclosure describes the combination of steel ENI piston material with Zn trivalent plating in aluminum wheel cylinder used in brake system. The innovative combination prevents the corrosion in severe environmental conditions. The use of Zn trivalent plated steel piston in aluminum cylinder is unique combination used in the proposed solution which acts as a resistance to corrosion happening in condition of high humidity atmosphere.

No. of Pages : 15 No. of Claims : 7

(12) PATENT APPLICATION PUBLICATION
(19) INDIA
(22) Date of filing of Application :29/03/2011
(21) Application No.958/MUM/2011 A
(43) Publication Date : 21/03/2014

(54) Title of the invention : A SUNCREEN COMPOSITION

(51) International classification :A61K8/00, A61Q17/04
(31) Priority Document No :NA
(32) Priority Date :NA
(33) Name of priority country :NA
(86) International Application No :NA
Filing Date :NA
(87) International Publication No : NA
(61) Patent of Addition to Application Number :NA
Filing Date :NA
(62) Divisional to Application Number :NA
Filing Date :NA

(71)**Name of Applicant :**
1)HINDUSTAN UNILEVER LIMITED
Address of Applicant :165/166 BACKBAY RACLAMATION, MUMBAI - 400020, MAHARASHTRA, INDIA
(72)**Name of Inventor :**
1)CHAVAN MOHAN VIJAYKUMAR
2)DUGGAL CHARU
3)GAURAV KUMAR
4)RAUT JANHAVI SANJAY
5)VAIDYA ASHISH ANANT

(57) Abstract :
The invention relates to a sunscreen composition. It is an object of the present invention to provide high SPF photo-protective sunscreen compositions while ensuring prolonged efficacy of the UV-A sunscreen used therein while using relatively low amounts of sunscreen agents thereby keeping costs low.

No. of Pages : 18 No. of Claims : 11

(12) PATENT APPLICATION PUBLICATION
(19) INDIA
(22) Date of filing of Application :17/09/2012
(21) Application No.2714/MUM/2012 A
(43) Publication Date : 21/03/2014

(54) Title of the invention : ENCLOSURE FOR BIOMETRIC SENSOR

(51) International classification	:A61B 5/117, G06K9/00
(31) Priority Document No	:NA
(32) Priority Date	:NA
(33) Name of priority country	:NA
(86) International Application No	:NA
Filing Date	:NA
(87) International Publication No	: NA
(61) Patent of Addition to Application Number	:NA
Filing Date	:NA
(62) Divisional to Application Number	:NA
Filing Date	:NA

(71)**Name of Applicant :**
1)TATA CONSULTANCY SERVICES LIMITED
Address of Applicant :Nirmal Building 9th Floor Nariman Point Mumbai 400021 Maharashtra India
(72)**Name of Inventor :**
1)Garg Shalin
2)Goswami Vibhor
3)Vallat Sathish
4)Subramaniam Natarajan Ganapathy

(57) Abstract :
An enclosure (100) for a biometric sensor (102) is described. The enclosure (100) comprises a cabinet (104) having a plurality of surfaces (106). The biometric sensor (102) placed inside the cabinet (104) on a holder (108) fixed on a primary surface (106-1) from amongst the plurality of the surfaces (106). A secondary surface (106-2) from amongst the plurality of surfaces (106) is opposite to the primary surface (106-1). The secondary surface (106-2) is substantially transparent to electromagnetic rays emitted by the biometric sensor (102).

No. of Pages : 30 No. of Claims : 14

(12) PATENT APPLICATION PUBLICATION
(19) INDIA
(22) Date of filing of Application :21/03/2011
(21) Application No.797/MUM/2011 A
(43) Publication Date : 21/03/2014

(54) Title of the invention : MULTIFUNCTIONAL MODULAR DEVICE FOR CIRCUIT BREAKERS TO PROVIDE MULTIPLE PROTECTIONS

(51) International classification	:H01H71/02, H02B1/26, H01H71/08
(31) Priority Document No	:NA
(32) Priority Date	:NA
(33) Name of priority country	:NA
(86) International Application No	:NA
Filing Date	:NA
(87) International Publication No	: NA
(61) Patent of Addition to Application Number	:NA
Filing Date	:NA
(62) Divisional to Application Number	:NA
Filing Date	:NA

(71)**Name of Applicant :**
1)DESHMUKH Vinod
Address of Applicant :Larsen & Toubro EBG ABEB Building Gate No. 7 Saki Vihar Road Powai Mumbai-400 072 Maharashtra India
(72)**Name of Inventor :**
1)DESHMUKH Vinod
2)JETHLIYA Rajesh

(57) Abstract :
This invention relates generally to a system and method for circuit protection and more particularly to a multifunctional modular device for circuit breakers to provide multiple protections and a method for the same. A multifunctional modular device for circuit breakers to provide multiple protections comprising shunt trip arrangement which receive signal through wired or wireless medium; a plurality of resistors to achieve the suitable voltage for sensing the under-voltage and overvoltage; a rectifier to achieve a unidirectional waveform connected to said resistors; a microcontroller that includes Analog to Digital Converter to receive analog input from the rectifier and convert it to digital form etc.

No. of Pages : 14 No. of Claims : 8

(12) PATENT APPLICATION PUBLICATION
(19) INDIA
(22) Date of filing of Application :21/03/2011
(21) Application No.798/MUM/2011 A
(43) Publication Date : 21/03/2014

(54) Title of the invention : BUS BAR SYSTEM FOR EFFECTIVE CURRENT DISTRIBUTION IN POWER DISTRIBUTION APPLICATIONS

(51) International classification	:H01R25/00, H01B7/30
(31) Priority Document No	:NA
(32) Priority Date	:NA
(33) Name of priority country	:NA
(86) International Application No	:NA
Filing Date	:NA
(87) International Publication No	: NA
(61) Patent of Addition to Application Number	:NA
Filing Date	:NA
(62) Divisional to Application Number	:NA
Filing Date	:NA

(71)**Name of Applicant :**
1)LARSEN & TOUBRO LIMITED
Address of Applicant :L & T House Ballard Estate Mumbai 400 001 MAHARASHTRA, INDIA
(72)**Name of Inventor :**
1)SHAH Tushar N.

(57) Abstract :
This invention relates generally to electrical power distribution system and more particularly to a Bus bar system for effective current distribution in power distribution applications. A Bus bar system for effective current distribution in power distribution applications wherein said bus bar system having substantially E shaped cross section (1) comprising a plurality of bars (2) providing effective current distribution, said bars (2) connected through plurality of connectors made with prefabricated parts; said system having a substantially hollow center portion providing thermal balance; a fastener (4) coupling said bus bar to said connectors, said fastener having substantially T shape.

No. of Pages : 17 No. of Claims : 7

(12) PATENT APPLICATION PUBLICATION
(19) INDIA
(22) Date of filing of Application :28/03/2011
(21) Application No.955/MUM/2011 A
(43) Publication Date : 21/03/2014

(54) Title of the invention : IMPROVED ARRANGEMENT FOR INDICATING TRIP CONDITION IN CIRCUIT BREAKER

(51) International classification :H01H71/04
(31) Priority Document No :NA
(32) Priority Date :NA
(33) Name of priority country :NA
(86) International Application No :NA
Filing Date :NA
(87) International Publication No : NA
(61) Patent of Addition to Application Number :NA
Filing Date :NA
(62) Divisional to Application Number :NA
Filing Date :NA

(71)**Name of Applicant :**
1)LARSEN & TOUBRO LIMITED
Address of Applicant :L & T House Ballard Estate Mumbai 400 001 MAHARASHTRA, INDIA
(72)**Name of Inventor :**
1)M. Muthuselvam;

(57) Abstract :
An improved arrangement for indicating trip conditions in a circuit breaker. The arrangement comprise of housing, a tripping mechanism, a trip indicating unit with a flag locker and a flag, and a slot in the housing to view the trip condition. Upon tripping the flag of trip indicating unit moves from a first position where it is not visible through the slot to a second position where it can be viewed through the slot in the housing, indicating the tripped condition. Present invention provides a Clear indication of Trip for particular type of fault.

No. of Pages : 19 No. of Claims : 13

(12) PATENT APPLICATION PUBLICATION
(19) INDIA
(22) Date of filing of Application :29/03/2011
(21) Application No.956/MUM/2011 A
(43) Publication Date : 21/03/2014

(54) Title of the invention : JET PUMP ARRANGEMENT FOR A FUEL TANK

(51) International classification	:F02M37/02, F02M37/10
(31) Priority Document No	:NA
(32) Priority Date	:NA
(33) Name of priority country	:NA
(86) International Application No	:NA
Filing Date	:NA
(87) International Publication No	: NA
(61) Patent of Addition to Application Number	:NA
Filing Date	:NA
(62) Divisional to Application Number	:NA
Filing Date	:NA

(71)**Name of Applicant :**
1)TATA MOTORS LIMITED
Address of Applicant :Bombay House 24 Homi Mody Street Hutatma Chowk Mumbai 400 001 Maharashtra India
(72)**Name of Inventor :**
1)NAVEEN AGARWAL
2)PANCHAL DEEPAK

(57) Abstract :
A metallic reservoir welded to bottom of an automotive smaller height metallic fuel tank, where it is not possible to have integrated plastic surge pot with jet pump to fuel pump, has an arrangement of jet pump and associated multiple components for maintaining the continuous and sufficient fuel level to pump inlet inside the reservoir in case of low fuel level and various vehicle operation, such as cornering, braking, acceleration and slope climbing, downhill and further to cool down the temperature of hot return fuel from the engine.

No. of Pages : 14 No. of Claims : 9

(12) PATENT APPLICATION PUBLICATION
(19) INDIA
(22) Date of filing of Application :26/03/2011
(21) Application No.913/MUM/2011 A
(43) Publication Date : 21/03/2014

(54) Title of the invention : IMPROVED ARRANGEMENT FOR USE CIRCUIT BREAKERS PROVIDING ACCURATE DATA FOR PERFORMANCE

(51) International classification	:H01H9/56, H02B13/035, H01H33/02
(31) Priority Document No	:NA
(32) Priority Date	:NA
(33) Name of priority country	:NA
(86) International Application No	:NA
Filing Date	:NA
(87) International Publication No	: NA
(61) Patent of Addition to Application Number	:NA
Filing Date	:NA
(62) Divisional to Application Number	:NA
Filing Date	:NA

(71)**Name of Applicant :**
1)LARSEN & TOUBRO LIMITED
Address of Applicant :L & T House Ballard Estate Mumbai 400 001 MAHARASHTRA, INDIA
(72)**Name of Inventor :**
1)DESAI Ganesh V.;
2)DUBE Reena R.;
3)BURA Virender Singh;

(57) Abstract :
This invention relates generally to an arrangement for performance analysis and more particularly to an improved arrangement for use in circuit breakers providing accurate data for performance of a system. Said arrangement comprising plurality of counters (2) connected in series with poles of a circuit breaker (1); said counter (2) connected to a timer (3) providing a preset delay; wherein said counters (2) and timer (3) adapted to track failure in a delatch mechanism of said circuit breaker (1). The present invention is more accurate.

No. of Pages : 11 No. of Claims : 7

(12) PATENT APPLICATION PUBLICATION
(19) INDIA
(22) Date of filing of Application :26/03/2011
(21) Application No.915/MUM/2011 A
(43) Publication Date : 21/03/2014

(54) Title of the invention : IMPROVED BENDING DIE ARRANGEMENT PROVIDING AUTOMATIC EJECTION OF COMPONENTS

(51) International classification	:B21D13/02, B21F1/00
(31) Priority Document No	:NA
(32) Priority Date	:NA
(33) Name of priority country	:NA
(86) International Application No	:NA
Filing Date	:NA
(87) International Publication No	: NA
(61) Patent of Addition to Application Number	:NA
Filing Date	:NA
(62) Divisional to Application Number	:NA
Filing Date	:NA

(71)**Name of Applicant :**
1)LARSEN & TOUBRO LIMITED
Address of Applicant :L & T House Ballard Estate Mumbai 400 001 MAHARASHTRA, INDIA
(72)**Name of Inventor :**
1)RANGREJ Swati Suryakant;
2)V. Vinay Kumar;

(57) Abstract :
This invention relates generally to pressing tool mechanism and more particularly to an improved bending die arrangement providing automatic ejection of component from a punch. Arrangement comprising a top assembly comprising a punch (3) operatively connected to a top plate (I), a hole in said punch (3) holding a striking pin . (7) having a roller (8) attached thereto; a bottom assembly comprising a cam (6) fixed on a base plate (2), said cam having a slot adapted to provide to and fro motion to striking pin (7), a C frame (11) fixed to said base plate (2) holding die block (4) and a heel block (12) in a fixed position etc. in the present mechanism no operator attention is required and reduces the operator fatigue.

No. of Pages : 16 No. of Claims : 5

(12) PATENT APPLICATION PUBLICATION
(19) INDIA
(22) Date of filing of Application :16/08/2012
(21) Application No.1973/MUMNP/2012 A
(43) Publication Date : 21/03/2014

(54) Title of the invention : SMOOTHING OVERLAPPED REGIONS RESULTING FROM GEOMETRIC MOTION PARTITIONING

(51) International classification	:H04N 7/26,H04N 7/36
(31) Priority Document No	:61/305,892
(32) Priority Date	:18/02/2010
(33) Name of priority country	:U.S.A.
(86) International Application No	:PCT/US2011/025123
Filing Date	:16/02/2011
(87) International Publication No	:WO/2011/103210
(61) Patent of Addition to Application Number	:NA
Filing Date	:NA
(62) Divisional to Application Number	:NA
Filing Date	:NA

(71)**Name of Applicant :**
1)QUALCOMM INCORPORATED
Address of Applicant :Attn: International IP Administration 5775 Morehouse Drive San Diego California 92121-1714 U.S.A.
(72)**Name of Inventor :**
1)CHEN Peisong
2)WANG Xianglin
3)KARCZEWICZ Marta

(57) Abstract :
In one example, an apparatus includes a video encoder configured to partition a block of video data into a first partition and a second partition using a geometric motion partition line, calculate a prediction value of a pixel in a transition region of the block using a filter that applies a value for at least one neighboring pixel from the first partition and a value for at least one neighboring pixel from the second partition, calculate a residual value of the pixel in the transition region of the block based on the prediction value of the pixel in the transition region, and output the residual value of the pixel. In one example, a video decoder may use a similar filter to decode an the encoded block after receiving the residual value for the encoded block, and using a definition of the geometric motion partition line.

No. of Pages : 75 No. of Claims : 48

(12) PATENT APPLICATION PUBLICATION
(19) INDIA
(22) Date of filing of Application :16/08/2012
(21) Application No.1974/MUMNP/2012 A
(43) Publication Date : 21/03/2014

(54) Title of the invention : METHODS AND APPARATUS FOR APPLYING TACTILE PRESSURE SENSORS

(51) International classification :H04Q 9/00,G01L 5/00
(31) Priority Document No :12/712,873
(32) Priority Date :25/02/2010
(33) Name of priority country :U.S.A.
(86) International Application No :PCT/US2011/026342
Filing Date :25/02/2011
(87) International Publication No :WO/2011/106719
(61) Patent of Addition to Application Number :NA
Filing Date :NA
(62) Divisional to Application Number :NA
Filing Date :NA

(71)**Name of Applicant :**
1)QUALCOMM INCORPORATED
Address of Applicant :Attn: International IP Administration 5775 Morehouse Drive San Diego California 92121-1714 U.S.A.
(72)**Name of Inventor :**
1)CHEN An M.
2)STEENSTRA Jack

(57) Abstract :
A method of wireless communication includes transmitting configuration information to a tactile pressure sensor apparatus, receiving pressure sensor data from the tactile pressure sensor apparatus based on the configuration information, and providing the received tactile pressure sensor data to a user.

No. of Pages : 38 No. of Claims : 57

(12) PATENT APPLICATION PUBLICATION
(19) INDIA
(22) Date of filing of Application :21/02/2012
(21) Application No.462/MUM/2012 A
(43) Publication Date : 21/03/2014

(54) Title of the invention : MODIFIED MEL FILTER BANK STRUCTURE USING SPECTRAL CHARACTERISTICS FOR SOUND ANALYSIS

(51) International classification	:G10L 15/02
(31) Priority Document No	:NA
(32) Priority Date	:NA
(33) Name of priority country	:NA
(86) International Application No	:NA
Filing Date	:NA
(87) International Publication No	:N/A
(61) Patent of Addition to Application Number	:NA
Filing Date	:NA
(62) Divisional to Application Number	:NA
Filing Date	:NA

(71)**Name of Applicant :**
1)TATA CONSULTANCY SERVICES LIMITED
Address of Applicant :NIRMAL BUILDING, 9TH FLOOR, NARIMAN POINT, MUMBAI 400021, MAHARASHTRA, INDIA
(72)**Name of Inventor :**
1)JAIN, JITENDRA
2)SINHA, ANIRUDDHA

(57) Abstract :
A system and method for detection of sound of interest amongst plurality of other dynamically varying sounds. A spectrum detection module identifies dominant spectrum energy frequency by detecting the dominant spectrum energy band present in spectrum of sound energy. A modified mel filter bank is designed by revising spectral positioning of the first mel filter bank and the second mel filter bank according to the identified dominant frequency. A feature extractor extracts the features from first mel filter bank, second mel filter bank and the modified mel filter bank which are further classified in order to detect the sound of interest.

No. of Pages : 29 No. of Claims : 11

(12) PATENT APPLICATION PUBLICATION
(19) INDIA
(22) Date of filing of Application :21/02/2012
(21) Application No.458/MUM/2012 A
(43) Publication Date : 21/03/2014

(54) Title of the invention : A REACTION CONTROL SYSTEM FOR THE CONTROLLED SYNTHESIS OF MAGNESIUM ALKOXIDE

(51) International classification	:C08F 10/06
(31) Priority Document No	:NA
(32) Priority Date	:NA
(33) Name of priority country	:NA
(86) International Application No	:NA
Filing Date	:NA
(87) International Publication No	:N/A
(61) Patent of Addition to Application Number	:NA
Filing Date	:NA
(62) Divisional to Application Number	:NA
Filing Date	:NA

(71)**Name of Applicant :**
1)RELIANCE INDUSTRIES LIMITED
Address of Applicant :3RD FLOOR, MAKER CHAMBER - IV, 222, NARIMAN POINT, MUMBAI 400 021, MAHARASHTRA, INDIA
(72)**Name of Inventor :**
1)SINGH, SAURABH
2)JOSEPH, JOMICHAN
3)SINGH, GURMEET
4)SINGALA, KAMLESH, J.
5)GUPTA, VIRENDRAKUMAR

(57) Abstract :
A reaction control system comprising: a pressure sensor attached to precursor synthesis reactor to detect reactor pressure; a reaction control agent tank; a control valve fitted on precursor synthesis reactor connected with reaction control agent tank; wherein the sensor monitors the pressure in reactor and open the valve to inject control agent into reactor to quench the reaction when pressure goes beyond pressure value set as safe limit. The present invention also provides a process for the controlled synthesis of magnesium alkoxide. A process to control the synthesis of magnesium alkoxide using the reaction control system of present invention.

No. of Pages : 13 No. of Claims : 14

(12) PATENT APPLICATION PUBLICATION
(19) INDIA
(22) Date of filing of Application :21/02/2012
(21) Application No.459/MUM/2012 A
(43) Publication Date : 21/03/2014

(54) Title of the invention : PROCESS FOR ENANTIOMERIC ENRICHMENT OF (R)-(-)-3-(CARBOMOYLMETHYL)-5-METHYLHEXANOIC ACID, A KEY INTERMEDIATE FOR PREGABALIN.

(51) International classification	:C07C 229/08
(31) Priority Document No	:NA
(32) Priority Date	:NA
(33) Name of priority country	:NA
(86) International Application No	:NA
Filing Date	:NA
(87) International Publication No	:N/A
(61) Patent of Addition to Application Number	:NA
Filing Date	:NA
(62) Divisional to Application Number	:NA
Filing Date	:NA

(71)**Name of Applicant :**
1)CADILA HEALTHCARE LIMITED
Address of Applicant :CADILA HEALTHCARE LTD., PLOT NO.26-29 & 31, DABHASA-UMARAYA ROAD VILL.DABHASA-391440 TAL. PADRA,DIST. VADODARA, GUJARAT, INDIA.
(72)**Name of Inventor :**
1)DWIVEDI SHRIPRAKASH DHAR
2)PRASAD ASHOK
3)GAJERA JITENDRA MAGANBHAI

(57) Abstract :
The invention relates to a process for enantiomeric enrichment of (R)-(-)-3-(carbomoylmethyl)-5-methylhexanoic acid, a useful intermediate for Pregabalin. In particular, the invention relates to a process for the preparation of (R)-(-)-3 -(carbomoylmethyl)-5-methylhexanoic acid with enantiomeric purity of atleast 99.5%.

No. of Pages : 18 No. of Claims : 9

(12) PATENT APPLICATION PUBLICATION
(19) INDIA
(22) Date of filing of Application :28/03/2011
(21) Application No.930/MUM/2011 A
(43) Publication Date : 21/03/2014

(54) Title of the invention : ROTARY MECHANISM FOR LOW VOLTAGE SWITCHGEAR PRODUCTS

(51) International classification	:H01H47/22, H02H9/04
(31) Priority Document No	:NA
(32) Priority Date	:NA
(33) Name of priority country	:NA
(86) International Application No	:NA
Filing Date	:NA
(87) International Publication No	: NA
(61) Patent of Addition to Application Number	:NA
Filing Date	:NA
(62) Divisional to Application Number	:NA
Filing Date	:NA

(71)**Name of Applicant :**
1)LARSEN & TOUBRO LIMITED
Address of Applicant :L & T House Ballard Estate Mumbai 400 001 MAHARASHTRA, INDIA
(72)**Name of Inventor :**
1)KAMBLE Sachin A.;
2)KUMAR Jammula Ajith;

(57) Abstract :
Rotary mechanism for low voltage switchgear products, said rotary mechanism comprising duality of modules connected back to back using an integrated actuating shaft; said module having a single mechanism consisting of one vertical input shaft with integral bevel gear; a second bevel gear joined with another coupler through a pin, said pin spring loaded; said spring connected directly to the output shaft providing force to the output shaft directly; and a housing to incorporate said rotary mechanism.

No. of Pages : 22 No. of Claims : 9

(12) PATENT APPLICATION PUBLICATION
(19) INDIA
(22) Date of filing of Application :28/03/2011
(21) Application No.932/MUM/2011 A
(43) Publication Date : 21/03/2014

(54) Title of the invention : AN IMPROVED ARRANGEMENT FOR PREVENTING BRIDGE MOVEMENT DURING TRANSIT

(51) International classification	:H01H71/00, H01H71/24
(31) Priority Document No	:NA
(32) Priority Date	:NA
(33) Name of priority country	:NA
(86) International Application No	:NA
Filing Date	:NA
(87) International Publication No	: NA
(61) Patent of Addition to Application Number	:NA
Filing Date	:NA
(62) Divisional to Application Number	:NA
Filing Date	:NA

(71)**Name of Applicant :**
1)LARSEN & TOUBRO LIMITED
Address of Applicant :L & T House Ballard Estate Mumbai 400 001 MAHARASHTRA, INDIA
(72)**Name of Inventor :**
1)NATH Subhasish;
2)KUMAR Santosh;
3)RATNAM Vivek;

(57) Abstract :
The present invention relates to an improved arrangement for preventing bridge movement in an electromagnetic contactor. The arrangement comprises a housing means (11, 12), an electromagnetic means, a coil means, plural bridge means (3) consisting of contacts and coupled with said electromagnetic means free or partially free to move in said housing corresponding to energising of said coil means and one or more straps (1) for preventing the free movement of said bridges.

No. of Pages : 12 No. of Claims : 8

(12) PATENT APPLICATION PUBLICATION
(19) INDIA
(22) Date of filing of Application :28/03/2011
(21) Application No.933/MUM/2011 A
(43) Publication Date : 21/03/2014

(54) Title of the invention : MECHANICAL ARRANGEMENT SUPPORTING ELECTRIC POLE

(51) International classification	:H01B17/12, F16L59/04
(31) Priority Document No	:NA
(32) Priority Date	:NA
(33) Name of priority country	:NA
(86) International Application No	:NA
Filing Date	:NA
(87) International Publication No	: NA
(61) Patent of Addition to Application Number	:NA
Filing Date	:NA
(62) Divisional to Application Number	:NA
Filing Date	:NA

(71)**Name of Applicant :**
1)LARSEN & TOUBRO LIMITED
Address of Applicant :L & T House Ballard Estate Mumbai 400 001 MAHARASHTRA, INDIA
(72)**Name of Inventor :**
1)VPB Chakravarthi Kajana;
2)BHUVANESWARI M.;

(57) Abstract :
This invention relates generally to a support arrangement in electric pole and more particularly to a mechanical arrangement supporting integrated insulated drive shaft in electric pole. A mechanical arrangement supporting integrated insulated drive shaft in electric pole, said arrangement comprising a plurality of elements substantially equally distributed along the circumference of said drive shaft providing substantially central alignment of said drive shaft during ON-OFF operation; Wherein said elements adapted to convert surface friction into line friction thereby reducing overall friction and reducing rotational lag of said drive shaft. It reduces heating effect to a great extent.

No. of Pages : 14 No. of Claims : 8

(12) PATENT APPLICATION PUBLICATION
(19) INDIA
(22) Date of filing of Application :24/03/2011
(21) Application No.881/MUM/2011 A
(43) Publication Date : 21/03/2014

(54) Title of the invention : A VARIABLE MAGNETIC RELEASE ASSEMBLY USING SOLENOID FOR MOULDED CASE CIRCUIT BREAKER

(51) International classification	:H01H71/44, H01H73/40
(31) Priority Document No	:NA
(32) Priority Date	:NA
(33) Name of priority country	:NA
(86) International Application No	:NA
Filing Date	:NA
(87) International Publication No	: NA
(61) Patent of Addition to Application Number	:NA
Filing Date	:NA
(62) Divisional to Application Number	:NA
Filing Date	:NA

(71)**Name of Applicant :**
1)LARSEN & TOUBRO LIMITED
Address of Applicant :L & T House Ballard Estate Mumbai 400 001 MAHARASHTRA, INDIA
(72)**Name of Inventor :**
1)NAHATA Deepak P.;
2)KHARADE Varsha K.;
3)SINGH Chandan Kumar;

(57) Abstract :
This invention relates generally to a moulded case circuit breaker (MCCB) and more particularly to a variable magnetic release assembly using a solenoid to sense the fault as per the pre-set fault level and giving signal for tripping the MCCB. A variable magnetic release assembly using solenoid for tripping a moulded case circuit breaker having a housing (1), contact assembly (3), mechanism assembly (4), the variable magnetic release assembly (5) comprising: a bobbin (17) made up of insulating material; a coil assembly which is part of main current carrying path and is wounded on bobbin (17); a box frame (20) made up of ferromagnetic material; a compression spring (18); a tripper (10) on plunger (16) made up of non magnetic material and connected to a moving plunger (11); a trip plate (8).

No. of Pages : 15 No. of Claims : 9

(12) PATENT APPLICATION PUBLICATION
(19) INDIA
(22) Date of filing of Application :22/02/2012
(21) Application No.480/MUM/2012 A
(43) Publication Date : 21/03/2014

(54) Title of the invention : USAGE OF PROGRAM TRACES FOR MODEL CHECKING OF CODE

(51) International classification	:G06F 9/44
(31) Priority Document No	:NA
(32) Priority Date	:NA
(33) Name of priority country	:NA
(86) International Application No	:NA
Filing Date	:NA
(87) International Publication No	:N/A
(61) Patent of Addition to Application Number	:NA
Filing Date	:NA
(62) Divisional to Application Number	:NA
Filing Date	:NA

(71)**Name of Applicant :**
1)TATA CONSULTANCY SERVICES LIMITED
Address of Applicant :NIRMAL BUILDING, 9TH FLOOR, NARIMAN POINT, MUMBAI 400021, MAHARASHTRA, INDIA
(72)**Name of Inventor :**
1)YEOLEKAR, ANAND V.

(57) Abstract :
The present invention illustrates an optimized approach for model checking of computer executable code. The system generates summaries by using trace inferences which are further used during model checking. Spurious counter-examples lead to newer traces and are used to improve summaries. The system considers summaries as a property of the computer executable code and uses it for abstraction during model checking process. The system provides an output confirming proper functionality of the computer executable code post the model checking process.

No. of Pages : 17 No. of Claims : 22

(12) PATENT APPLICATION PUBLICATION
(19) INDIA
(22) Date of filing of Application :22/02/2012
(21) Application No.481/MUM/2012 A
(43) Publication Date : 21/03/2014

(54) Title of the invention : INNOVATIVE CAM PROFILE TESTING MACHINE

(51) International classification	:G01B 21/20
(31) Priority Document No	:NA
(32) Priority Date	:NA
(33) Name of priority country	:NA
(86) International Application No	:NA
Filing Date	:NA
(87) International Publication No	:N/A
(61) Patent of Addition to Application Number	:NA
Filing Date	:NA
(62) Divisional to Application Number	:NA
Filing Date	:NA

(71)**Name of Applicant :**
1)BHOOMKAR MANMOHAN MANIKRAO
Address of Applicant :M-5/303, MHB COLONY, LAXMI NAGAR, PARVATI, PUNE-09 Maharashtra India
(72)**Name of Inventor :**
1)BHOOMKAR M. M.
2)MAHAJAN S. K.

(57) Abstract :
Considering the requirement of small & medium scale industries, we have constructed a simple cam profile testing machine, which can test the concentricity, lag, maximum lift & throw between two cams simultaneously. This machine is compact and robust in design. It is simple in construction, easy to operate, cheap & does not require power supply. Due to simple & fast inspection procedure, this cam profile testing machine can also be directly used in cam-cam shaft assembly line. With the help of this cam profile machine with two-wheeler engine up to 20cm length of cam shaft can be easily tested & also using profile projectors the profile of cam shaft can be easily projected & compared with the standard profile to calculate the errors.

No. of Pages : 7 No. of Claims : 2

(12) PATENT APPLICATION PUBLICATION
(19) INDIA
(22) Date of filing of Application :24/03/2011
(21) Application No.880/MUM/2011 A
(43) Publication Date : 21/03/2014

(54) Title of the invention : IMPROVED LOCKING SYSTEM FOR CIRCUIT BREAKERS

(51) International classification	:H01H9/20, H01H9/28
(31) Priority Document No	:NA
(32) Priority Date	:NA
(33) Name of priority country	:NA
(86) International Application No	:NA
Filing Date	:NA
(87) International Publication No	: NA
(61) Patent of Addition to Application Number	:NA
Filing Date	:NA
(62) Divisional to Application Number	:NA
Filing Date	:NA

(71)**Name of Applicant :**
1)LARSEN & TOUBRO LIMITED
Address of Applicant :L & T House Ballard Estate Mumbai 400 001 MAHARASHTRA, INDIA
(72)**Name of Inventor :**
1)DONGARE Vishal;
2)PATANKAR Shreeyash;
3)KHAN Akram;

(57) Abstract :
This invention relates generally to circuit breakers. More particularly, the present invention relates to an improved locking system for circuit breakers. Said system comprising a plurality of latches engaging with corresponding slots on rails of a switch gear, said latch mounted with a spring (61) using a latch plate (62) and a latch pin (63); a plurality of wires for driving said latches; a racking system having a racking screw (9) with a nut (91) mounted thereto; a locking member (1) spring loaded against a support (5) and consisting an engagement slot (11).

No. of Pages : 17 No. of Claims : 8

(12) PATENT APPLICATION PUBLICATION
(19) INDIA
(22) Date of filing of Application :14/01/2013
(21) Application No.120/MUMNP/2013 A
(43) Publication Date : 21/03/2014

(54) Title of the invention : HEAT TRANSFER SHEET MANUFACTURING METHOD FOR HEAT TRANSFER SHEET AND HEAT RADIATION DEVICE

(51) International classification	:H01L23/36, B32B15/06
(31) Priority Document No	:2010138488
(32) Priority Date	:17/06/2010
(33) Name of priority country	:Japan
(86) International Application No	:PCT/JP2011/060094
Filing Date	:25/04/2011
(87) International Publication No	:WO 2011/158565
(61) Patent of Addition to Application Number	:NA
Filing Date	:NA
(62) Divisional to Application Number	:NA
Filing Date	:NA

(71)**Name of Applicant :**
1)Hitachi Chemical Company Ltd.
Address of Applicant :1 1 Nishi Shinjuku 2 chome Shinjuku ku Tokyo 1630449 Japan
(72)**Name of Inventor :**
1)YAJIMA Michiaki
2)YAMAMOTO Rei
3)YOSHIKAWA Tooru
4)SEKI Tomonori

(57) Abstract :
The disclosed heat transfer sheet comprises a substrate sheet and a metal foil (C) which is on one of the surfaces of the substrate sheet and is 1 30% of the thickness of the substrate sheet. The substrate sheet contains a binder component (A) which exhibits elasticity at room temperature and a graphite powder (B) having anisotropy with the graphite powder (B) being orientated in the sheet thickness direction.

No. of Pages : 32 No. of Claims : 10

(12) PATENT APPLICATION PUBLICATION
(19) INDIA
(22) Date of filing of Application :16/02/2012
(21) Application No.431/MUM/2012 A
(43) Publication Date : 21/03/2014

(54) Title of the invention : A WIDE INPUT RANGE SWITCHING MODE POWER SUPPLY (SMPS) EQUIPMENT ASSEMBLY.

(51) International classification	:H01J 1/13
(31) Priority Document No	:NA
(32) Priority Date	:NA
(33) Name of priority country	:NA
(86) International Application No	:NA
Filing Date	:NA
(87) International Publication No	:N/A
(61) Patent of Addition to Application Number	:NA
Filing Date	:NA
(62) Divisional to Application Number	:NA
Filing Date	:NA

(71)**Name of Applicant :**
1)CROMPTON GREAVES LIMITED
Address of Applicant :CG HOUSE, DR.ANNIE BESANT ROAD, WORLI, MUMBAI-400 030, MAHARASHTRA, INDIA
(72)**Name of Inventor :**
1)SHARMA VIJAY RAMSUNDER
2)BAVISKAR GANESH PURUSHOTTAM

(57) Abstract :
A wide input range Switching Mode Power Supply (SMPS) equipment assembly comprises: input means adapted to input a current of pre-defined voltage range; transistorised constant current and voltage circuit mechanism for pulse width modulated controller means adapted to receive input current to be given as a further input to a pulse width modulation controller which controls the duty cycle of a transformer adapted to provide output; freewheeling and voltage clamping means adapted to provide a voltage clamping threshold for said assembly; Pulse Width Modulation controller adapted to receive said transistorised constant current and voltage output, further adapted to receive feedback from output of said assembly in order to provide modulated signals to a drive mechanism which in turn provides drive signals to a high voltage high frequency switching device; and high frequency transformer adapted to receive switching signals from said high voltage high frequency switching device in relation to said drive signals and further adapted to receive voltage clamping threshold in order to provide assembly voltage output; characterised, in that, said duty cycle of the pulses for switching said transformer being varied from 10 to 90% for achieving said pre-determined (wide) input range.

No. of Pages : 16 No. of Claims : 13

(12) PATENT APPLICATION PUBLICATION
(19) INDIA
(22) Date of filing of Application :22/03/2011
(21) Application No.834/MUM/2011 A
(43) Publication Date : 21/03/2014

(54) Title of the invention : LATCH SYSTEM FOR A CIRCUIT BREAKER MECHANISM

(51) International classification	:H01H5/00, H01H33/46
(31) Priority Document No	:NA
(32) Priority Date	:NA
(33) Name of priority country	:NA
(86) International Application No	:NA
Filing Date	:NA
(87) International Publication No	: NA
(61) Patent of Addition to Application Number	:NA
Filing Date	:NA
(62) Divisional to Application Number	:NA
Filing Date	:NA

(71)**Name of Applicant :**
1)LARSEN & TOUBRO LIMITED
Address of Applicant :L & T House Ballard Estate Mumbai 400 001 MAHARASHTRA, INDIA
(72)**Name of Inventor :**
1)N. Prabhu;
2)K. Nagarjun;
3)L. Arvind Kumar;

(57) Abstract :
This invention relates generally to Circuit breakers and more particularly to a latch system for a circuit breaker mechanism for latching in normal operation and de-latching on occurrence of fault. System comprising atleast one latch link; atleast one latch bracket (1); atleast one trip plate (2); atleast one side plate; atleast one biasing spring (4); atleast one trip plate hinge pin (3); atleast one knob (8); atleast one fork (9); atleast one reset pin (10); wherein profile of said latch bracket and said trip plate adapted to act as stoppers on said side plate. It provides an advantage of optimized and effective latching.

No. of Pages : 19 No. of Claims : 10

(12) PATENT APPLICATION PUBLICATION
(19) INDIA
(22) Date of filing of Application :25/03/2011
(21) Application No.886/MUM/2011 A
(43) Publication Date : 21/03/2014

(54) Title of the invention : VEHICLE DOOR TRIM INTEGRATED WITH WET UMBRELLA HOLDER AND SYSTEM TO FEED WATER TO WINDSHIELD WASHER BOTTLE

(51) International classification	:B60J5/04, B60R21/04
(31) Priority Document No	:NA
(32) Priority Date	:NA
(33) Name of priority country	:NA
(86) International Application No	:NA
Filing Date	:NA
(87) International Publication No	: NA
(61) Patent of Addition to Application Number	:NA
Filing Date	:NA
(62) Divisional to Application Number	:NA
Filing Date	:NA

(71)**Name of Applicant :**
1)MAHINDRA & MAHINDRA LIMITED
Address of Applicant :R&D CENTER, AUTO SECTOR, 89, M.I.D.C., SATPUR, NASHIK - 422007 MAHARASHTRA, INDIA
(72)**Name of Inventor :**
1)YOGESH BHASKAR PATIL
2)KIRAN BHALCHANDRA VAIRAGKAR
3)YOGESH ARUN FARTADE

(57) Abstract :
The present invention provides a water circulating system for collecting water from web umbrella holder and feeding the same water to windshield washer bottle. The system inclueds an article holder, a water tank and a pump. The article holder is disposed on the trim pad of an automobile. The water tank is disposed behind the trim pad and conncted to article holder by a water conveying tube. Further, the water collected in the article holder is collected in the water tank through the water conveying tube. The pump diposed juxtaposition to the water tank, wherein the pump pumps water from the water tank to a windshield for wiper to clean the windshield or on front body of the automobile for cleaning.

No. of Pages : 10 No. of Claims : 5

(12) PATENT APPLICATION PUBLICATION
(19) INDIA
(22) Date of filing of Application :28/03/2011
(21) Application No.944/MUM/2011 A
(43) Publication Date : 21/03/2014

(54) Title of the invention : DEXLANSOPRAZOLE COMPOSITIONS

(51) International classification	:A61K9/14, A61K31/4439
(31) Priority Document No	:NA
(32) Priority Date	:NA
(33) Name of priority country	:NA
(86) International Application No	:NA
Filing Date	:NA
(87) International Publication No	: NA
(61) Patent of Addition to Application Number	:NA
Filing Date	:NA
(62) Divisional to Application Number	:NA
Filing Date	:NA

(71)**Name of Applicant :**
1)GLENMARK GENERICS LIMITED
Address of Applicant :GLENMARK HOUSE, HDO-CORPORATE BLDG, WING - A, B.D. SAWANT MARG, CHAKALA, ANDHERI (EAST), MUMBAI - 400 099, Maharashtra India
(72)**Name of Inventor :**
1)KAMAL MEHTA
2)SADHIS KUMAR
3)TAUFIK KAZI

(57) Abstract :
Present invention provides a delayed release capsule comprising; a core containing dexlansoprazole or pharmaceutically acceptable salt thereof, alkaline agent and at least one pharmaceutically acceptable carrier, a subcoat of water soluble film forming polymers; wherein about 0 to 50 % of the subcoated core, is coated with an enteric coat that dissolves in the pH range of about 5.0 to about 5.5 and about 50 to 100% of the subcoated core, is coated with water insoluble polymer, water soluble film forming polymer and plasticizer; followed by the coating comprising an enteric polymer that dissolves in the pH range of 5.0 to 5.5.

No. of Pages : 21 No. of Claims : 8

(12) PATENT APPLICATION PUBLICATION
(19) INDIA
(22) Date of filing of Application :22/03/2011
(21) Application No.837/MUM/2011 A
(43) Publication Date : 21/03/2014

(54) Title of the invention : IMPROVED CIRCUIT BREAKER MECHANISM PROVIDING ELECTROMECHANICAL COMPENSATION

(51) International classification	:H01H71/162, H01H71/04
(31) Priority Document No	:NA
(32) Priority Date	:NA
(33) Name of priority country	:NA
(86) International Application No	:NA
Filing Date	:NA
(87) International Publication No	: NA
(61) Patent of Addition to Application Number	:NA
Filing Date	:NA
(62) Divisional to Application Number	:NA
Filing Date	:NA

(71)**Name of Applicant :**
1)LARSEN & TOUBRO LIMITED
Address of Applicant :L & T House Ballard Estate Mumbai 400 001 MAHARASHTRA, INDIA
(72)**Name of Inventor :**
1)CHATURVEDI Amit;
2)KASIVISWANADHAM P.;
3)PRABHU Arulanantha;
4)SAHA Saurabh;

(57) Abstract :
This invention relates generally to circuit breaker and more particularly to an improved circuit breaker mechanism providing electromechanical compensation. An improved circuit breaker mechanism providing electromechanical compensation, said mechanism comprising atleast one fixed contact arm for carrying current having a fixed contact button attached thereto; atleast one moving contact arm having a moving contact button attached thereto, said moving contact arm shielded using a moving contact shield; atleast one fixed runner connected to said fixed contact for efficient movement of electric arc during fault etc. It helps increase life of breaker.

No. of Pages : 22 No. of Claims : 8

(12) PATENT APPLICATION PUBLICATION
(19) INDIA
(22) Date of filing of Application :28/03/2011
(21) Application No.949/MUM/2011 A
(43) Publication Date : 21/03/2014

(54) Title of the invention : PORTABLE APPARATUS FOR CHECKING THE INSTALLATION OF A UNIVERSAL ISOFIX CHILD RESTRAINT SYSTEM IN A VEHICLE

(51) International classification	:B60R22/10, B60N2/28
(31) Priority Document No	:NA
(32) Priority Date	:NA
(33) Name of priority country	:NA
(86) International Application No	:NA
Filing Date	:NA
(87) International Publication No	: NA
(61) Patent of Addition to Application Number	:NA
Filing Date	:NA
(62) Divisional to Application Number	:NA
Filing Date	:NA

(71)**Name of Applicant :**
1)TATA MOTORS LIMITED
Address of Applicant :BOMBAY HOUSE, 24 HOMI MODY STREET, HUTATMA CHOWK, MUMBAI 400 001, Maharashtra India
(72)**Name of Inventor :**
1)VINAYAK S GOGATE
2)SANJAY Y VAIJ
3)MADHAV K ARGULKAR

(57) Abstract :
The invention discloses an apparatus for checking the location of a support leg and a support surface of a Child Restraint System (CRS) with respect to an ISOFIX striker of a vehicle seat. The apparatus includes a support base having a base plate, a lock unit for engaging with the ISOFIX striker, and an adjustment block containing an adjustable fork, and a locking bolt for locking the adjusted position of said adjustable fork. The apparatus also includes a vertical column having a slidable block of predetermined longitudinal and vertical dimensions, a guide block movable on vertical transverse plane of said vertical column containing a hole matching the shape of the vertical column and a locking crew for maintaining angular position of said adjustable fork and a base unit for positioning said vertical column on the support surface. The vertical column and the adjustable fork are graduated in terms of angle of inclination of the support base with the horizontal plane and the scale of said vertical column contains two markings for indicating an acceptable range for positioning of the top surface of said slidable block according to standardized procedure.

No. of Pages : 18 No. of Claims : 3

(12) PATENT APPLICATION PUBLICATION
(19) INDIA
(22) Date of filing of Application :21/03/2011
(21) Application No.788/MUM/2011 A
(43) Publication Date : 21/03/2014

(54) Title of the invention : AN IMPROVED MAGNETIC TRIPPING SYSTEM FOR CIRCUIT PROTECTION DEVICE

(51) International classification	:H01H71/40, H01H71/50
(31) Priority Document No	:NA
(32) Priority Date	:NA
(33) Name of priority country	:NA
(86) International Application No	:NA
Filing Date	:NA
(87) International Publication No	: NA
(61) Patent of Addition to Application Number	:NA
Filing Date	:NA
(62) Divisional to Application Number	:NA
Filing Date	:NA

(71)**Name of Applicant :**
1)LARSEN & TOUBRO LIMITED
Address of Applicant :L & T House Ballard Estate Mumbai 400 001 MAHARASHTRA, INDIA
(72)**Name of Inventor :**
1)OCHANI Deepak M.
2)AGRAWAL Alok

(57) Abstract :
An improved magnetic tripping system for circuit protection device comprising a duality of magnetic system wherein the fixed magnet (2) is connected to the link (1) with the help of a screw (8) and the moving magnet (3) connected to the pin (6) which is further connected to the trip bar. The present invention provides for easy calibration and assembly, variable magnetic tripping and reduced manufacturing time. Also the magnetic arrangement can be used for wide range of application without doing much changes and ail this happens with reduction in dimensions and weight of the entire system thus making it compact. The invention disclosed here is a green product concept.

No. of Pages : 21 No. of Claims : 5

(12) PATENT APPLICATION PUBLICATION
(19) INDIA
(22) Date of filing of Application :21/03/2011

(21) Application No.789/MUM/2011 A
(43) Publication Date : 21/03/2014

(54) Title of the invention : AN IMPROVED MAGNETIC TRIPPING SYSTEM FOR CIRCUIT PROTECTION DEVICE

(51) International classification	:H01H81/04, H01H77/06
(31) Priority Document No	:NA
(32) Priority Date	:NA
(33) Name of priority country	:NA
(86) International Application No	:NA
Filing Date	:NA
(87) International Publication No	: NA
(61) Patent of Addition to Application Number	:NA
Filing Date	:NA
(62) Divisional to Application Number	:NA
Filing Date	:NA

(71)**Name of Applicant :**
1)LARSEN & TOUBRO LIMITED
Address of Applicant :L & T House Ballard Estate Mumbai 400 001 MAHARASHTRA, INDIA
(72)**Name of Inventor :**
1)OCHANI Deepak M.
2)AGRAWAL Alok

(57) Abstract :
The present invention relates to an improved magnetic tripping system for use in circuit breakers. The system comprises a link means (1), a fixed magnet (2) engaged to said link means (1) on its one side; a moving magnet (3) being hingeably and therefore rotatably engaged to said fixed magnet (2) so as to position itself on the other and in proximity to said link means (1) defining an adjustable air gap; plurality of screw means (8) engaged on one end to said moving magnet (3) and received on other ends by plural receiving components (6). Receiving components are in communication with the fixed magnet (2) through plural biasing means (5) such that moving magnet is movable towards and away from said link means and wherein during short circuit condition movement of said moving magnet corresponding to increased magnetic field trips the circuit breaker.

No. of Pages : 20 No. of Claims : 8

(12) PATENT APPLICATION PUBLICATION
(19) INDIA
(22) Date of filing of Application :22/03/2011
(21) Application No.836/MUM/2011 A
(43) Publication Date : 21/03/2014

(54) Title of the invention : PRESSURE ACTUATED FUSE BLOWN INDICATION SYSTEM

(51) International classification	:H01H85/30, H01H85/00
(31) Priority Document No	:NA
(32) Priority Date	:NA
(33) Name of priority country	:NA
(86) International Application No	:NA
Filing Date	:NA
(87) International Publication No	: NA
(61) Patent of Addition to Application Number	:NA
Filing Date	:NA
(62) Divisional to Application Number	:NA
Filing Date	:NA

(71)**Name of Applicant :**
1)LARSEN & TOUBRO LIMITED
Address of Applicant :L & T House Ballard Estate Mumbai 400 001 MAHARASHTRA, INDIA
(72)**Name of Inventor :**
1)AGARWAL Naveen
2)SINHA Neeraj
3)BHANU Ashwin
4)KUMAR Harshal

(57) Abstract :
The present invention relates to an improved indication system for indicating blown status of fuse. The system comprises fuse body (4), plurality of end plates (2) and indicating means (1) screwably fixed to said end plates. The indicating means comprises diaphragmatic valve means, wherein said valve means having thickness such that it will pop out almost instantaneously when there is excess pressure inside said fuse body.

No. of Pages : 14 No. of Claims : 6

(12) PATENT APPLICATION PUBLICATION
(19) INDIA
(22) Date of filing of Application :28/03/2011
(21) Application No.950/MUM/2011 A
(43) Publication Date : 21/03/2014

(54) Title of the invention : A MOUNTING ARRANGEMENT FOR OIL FILTER AND OIL COOLER FOR IC ENGINES

(51) International classification	:F02F7/00, F01M11/00
(31) Priority Document No	:NA
(32) Priority Date	:NA
(33) Name of priority country	:NA
(86) International Application No	:NA
Filing Date	:NA
(87) International Publication No	: NA
(61) Patent of Addition to Application Number	:NA
Filing Date	:NA
(62) Divisional to Application Number	:NA
Filing Date	:NA

(71)**Name of Applicant :**
1)TATA MOTORS LIMITED
Address of Applicant :BOMBAY HOUSE, 24 HOMI MODY STREET, HUTATMA CHOWK, MUMBAI 400 001, Maharashtra India
(72)**Name of Inventor :**
1)MILIND D PESHAVE
2)NIRAJ R DHARKAR
3)D AJITH

(57) Abstract :
The mounting arrangement for mounting an oil filter and oil cooler, includes a cylinder block is provided with internal oil lines to lubricate the internal rotating parts. An adaptor having two angled faces respectively for attaching to the cylinder block and mounting an oil filter is assembled with the side wall of the cylinder block. The inlet passage and outlet passage on the attaching face of the adaptor mate with the inlet and outlet passages on the machined surface of the cylinder block. A connector having through hole connecting the adaptor and the oil filter. The connector channelizes the oil communication between the cylinder block and the oil filter through the adaptor. The oil filter is prevented from having direct contact with the side wall of the cylinder block. An oil is cooler secured between the adaptor and the oil filter, which surrounds the connector and provide a circumferential passage for the oil flow to the oil filter and simultaneously cool the passing oil.

No. of Pages : 20 No. of Claims : 13

(12) PATENT APPLICATION PUBLICATION
(19) INDIA
(22) Date of filing of Application :23/03/2011
(21) Application No.845/MUM/2011 A
(43) Publication Date : 21/03/2014

(54) Title of the invention : A PROCESS FOR DESULPHURIZATION OF PETROLEUM OIL

(51) International classification :C10G19/073
(31) Priority Document No :NA
(32) Priority Date :NA
(33) Name of priority country :NA
(86) International Application No :NA
Filing Date :NA
(87) International Publication No : NA
(61) Patent of Addition to Application Number :NA
Filing Date :NA
(62) Divisional to Application Number :NA
Filing Date :NA

(71)**Name of Applicant :**
1)ADITYA BIRLA SCIENCE & TECHNOLOGY CO. LTD.
Address of Applicant :ADITYA BIRLA CENTRE, 2ND FLOOR, C WING, S. K. AHIRE MARG, WORLI, MUMBAI 400 025, MAHARASHTRA, INDIA
(72)**Name of Inventor :**
1)CHAVAN SANDEEP VASANT
2)KINI HARSHAD RAVINDRA
3)KAPOOR BIR

(57) Abstract :
A process for desulphurization of petroleum oil, comprising the step of diluting the feed oil with a suitable organic solvent prior to the desulphurization reaction, is disclosed. The organic solvent is selected from alkanes, alkenes, cyclic alkenes and alkynes, and particularly selected from n-hexane, cyclohexane, heptane, pentene, hexene, heptene, octene, toluene and xylene. The solvent concentration in the mixture of feed oil and solvent is in the range of 0.1 - 70 %.

No. of Pages : 29 No. of Claims : 10

(12) PATENT APPLICATION PUBLICATION
(19) INDIA
(22) Date of filing of Application :25/03/2011
(21) Application No.896/MUM/2011 A
(43) Publication Date : 21/03/2014

(54) Title of the invention : A CLUTCH RELEASE MECHANISM AND A CLUTCH DEVICE INCORPORATING THE SAME

(51) International classification	:F16D13/52, F16D23/12
(31) Priority Document No	:NA
(32) Priority Date	:NA
(33) Name of priority country	:NA
(86) International Application No	:NA
Filing Date	:NA
(87) International Publication No	: NA
(61) Patent of Addition to Application Number	:NA
Filing Date	:NA
(62) Divisional to Application Number	:NA
Filing Date	:NA

(71)**Name of Applicant :**
1)TATA MOTORS LIMITED
Address of Applicant :BOMBAY HOUSE, 24 HOMI MODY STREET, HUTATMA CHOWK, MUMBAI 400 001, MAHARASHTRA, INDIA
(72)**Name of Inventor :**
1)JANARDHANAN VENKATAPATHI
2)CHOLLANGI DAMODAR N
3)MEDISETTI DURGA PRASAD
4)MUSALE SOPAN

(57) Abstract :
The invention relates to a clutch release mechanism that comprises a clutch cover tube provided with guiding slots and a clutch release bearing capable of being guided into the inner diameter of the clutch cover tube. An outer race of the clutch release bearing is assembled on a support sleeve which is also guided into the inner diameter of the cover tube. The contact diameter of the clutch release bearing is chosen such that is matches the requirements of the clutch cover assembly. The guiding slots provided in the cover tube facilitates the actuation of the clutch release bearing from outside and is capable of preventing rotation of the clutch release bearing by providing suitable provisions on the support sleeve. The clutch is disengaged by means of yoke arms capable of interacting with the support sleeve which in turn contacts the diaphragm of the pressure plate assembly which releases the pressure on the clutch disc assembly and hence releases/disengages the clutch.

No. of Pages : 16 No. of Claims : 10

(12) PATENT APPLICATION PUBLICATION
(19) INDIA
(22) Date of filing of Application :29/03/2011
(21) Application No.959/MUM/2011 A
(43) Publication Date : 21/03/2014

(54) Title of the invention : A SUNSCREEN COMPOSITION

(51) International classification :A61K8/00, A61Q17/04
(31) Priority Document No :NA
(32) Priority Date :NA
(33) Name of priority country :NA
(86) International Application No :NA
Filing Date :NA
(87) International Publication No : NA
(61) Patent of Addition to Application Number :NA
Filing Date :NA
(62) Divisional to Application Number :NA
Filing Date :NA

(71)**Name of Applicant :**
1)HINDUSTAN UNILEVER LIMITED
Address of Applicant :165/166 BACKBAY RECLAMATION, MUMBAI - 400020, MAHARASHTRA, INDIA
(72)**Name of Inventor :**
1)CHAVAN MOHAN VIJAYKUMAR
2)DUGGAL CHARU
3)GAURAV KUMAR
4)RAUT JANHAVI SANJAY
5)VAIDYA ASHISH ANANT

(57) Abstract :
The invention relates to a sunscreen composition. Known compositions do not provide enhanced SPF while using low amounts of organic sunscreens. It is thus an object of the present invention to provide high SPF photo-protective sunscreen compositions using relatively low amounts of sunscreen agents thereby keeping costs low.

No. of Pages : 16 No. of Claims : 11

(12) PATENT APPLICATION PUBLICATION
(19) INDIA
(22) Date of filing of Application :18/03/2011
(21) Application No.776/MUM/2011 A
(43) Publication Date : 21/03/2014

(54) Title of the invention : ELECTRICITY GENERATING APPARATUS USING SOLAR-POWER

(51) International classification	:F24J2/46, F24J2/54
(31) Priority Document No	:099112015
(32) Priority Date	:16/04/2010
(33) Name of priority country	:Taiwan
(86) International Application No	:NA
Filing Date	:NA
(87) International Publication No	: NA
(61) Patent of Addition to Application Number	:NA
Filing Date	:NA
(62) Divisional to Application Number	:NA
Filing Date	:NA

(71)**Name of Applicant :**
1)FUNG GIN DA ENERGY SCIENCE AND TECHNOLOGY CO., LTD.
Address of Applicant :NO. 656, JHONGYUAN LANE, JHUWEI VILLAGE, NEIPU TOWNSHIP, PINGTUNG COUNTY, TAIWAN
(72)**Name of Inventor :**
1)CHUNG CHUN-NENG

(57) Abstract :
An electricity generating apparatus using solar power includes a supporting device (3) for supporting movably a solar power collecting unit (2) that includes a solar power collecting plate (22) carried on a carrier (21) for converting solar power into electrical energy, and a condensing unit mounted on the carrier (21) and disposed above the solar power collecting plate (22) . The supporting device (3) includes a disk member (32) mounted rotatably on a top side of a hollow base body (31) and driven by a drive unit in the base body (31) to rotate relative to the base body (31) in a central axis (a) of the disk member (32) , and a telescopic rod member (34) and two upright supporting rods (35) interconnecting said carrier (21) and the disk member (32) A control module (4) controls the drive unit and the telescopic rod member (34) based on a solar radiating direction such that the solar power collecting plate (22) is moved to face sunlight.

No. of Pages : 22 No. of Claims : 10

(12) PATENT APPLICATION PUBLICATION
(19) INDIA
(22) Date of filing of Application :29/03/2011
(21) Application No.963/MUM/2011 A
(43) Publication Date : 21/03/2014

(54) Title of the invention : COMBINATION COMPOSITION COMPRISING BENZOYL PEROXIDE AND ADAPALENE

(51) International classification	:A61K31/327, A61P17/10
(31) Priority Document No	:NA
(32) Priority Date	:NA
(33) Name of priority country	:NA
(86) International Application No	:NA
Filing Date	:NA
(87) International Publication No	: NA
(61) Patent of Addition to Application Number	:NA
Filing Date	:NA
(62) Divisional to Application Number	:NA
Filing Date	:NA

(71)**Name of Applicant :**
1)GLENMARK GENERICS LIMITED
Address of Applicant :GLENMARK HOUSE, HDO - CORPORATE BLDG, WING - A, B.D. SAWANT MARG, CHAKALA, ANDHERI (EAST), MUMBAI - 400 099, Maharashtra India
(72)**Name of Inventor :**
1)MEHTA, KAMAL
2)PANIGRAHI, LALATENDU
3)NAYAK, UDAY KUMAR
4)PATRO, BALAKRISHNA

(57) Abstract :
An aqueous gel composition of the present invention comprising about 0.1 to 0.3 wt % adapalene and about 2.5 to 5.0 wt % benzoyl peroxide wherein both the active ingredients are stabilized in hydrophilic gelling matrix of pH dependent gelling agent comprising crosslinked, acrylic acid-based polymer(s).

No. of Pages : 23 No. of Claims : 10

(12) PATENT APPLICATION PUBLICATION
(19) INDIA
(22) Date of filing of Application :26/03/2011
(21) Application No.909/MUM/2011 A
(43) Publication Date : 21/03/2014

(54) Title of the invention : CIRCUIT BREAKER MECHANISM PROVIDING AUTOMATIC DISCHARGE

(51) International classification	:H02B11/173, H01H33/42, H01H9/20
(31) Priority Document No	:NA
(32) Priority Date	:NA
(33) Name of priority country	:NA
(86) International Application No	:NA
Filing Date	:NA
(87) International Publication No	: NA
(61) Patent of Addition to Application Number	:NA
Filing Date	:NA
(62) Divisional to Application Number	:NA
Filing Date	:NA

(71)**Name of Applicant :**
1)LARSEN & TOUBRO LIMITED
Address of Applicant :L & T House Ballard Estate Mumbai 400 001 MAHARASHTRA, INDIA
(72)**Name of Inventor :**
1)DAVE Mahendra C.;
2)KANNADKAR Dinesh R.;
3)KHAN Akram;

(57) Abstract :
The present invention provides for a withdrawable circuit breaker having spring discharge arrangement adapted for automatic discharge of the charged spring before unloading from cradle. It comprises Spring mechanism for switching ON and OFF the Circuit breaker; Cradle wherein the base plate provides for plurality of humps separated by a distance to ensure lower stress; Breaker having push buttons for ON and OFF operation required to regulate racking shutter; a plurality of jaws are at each of the contact jaws locations; Racking shutter ifor racking out the Weaker from connected position. There is a reduced stress on the mechanism by having delay in closing and opening operation, thus ensuring higher mechanical life.

No. of Pages : 28 No. of Claims : 6

(12) PATENT APPLICATION PUBLICATION
(19) INDIA
(22) Date of filing of Application :31/08/2012
(21) Application No.2538/MUM/2012 A
(43) Publication Date : 21/03/2014

(54) Title of the invention : RMD SHUTTERING BOARD

(51) International classification	:H04N13/00, G06T7/00
(31) Priority Document No	:NA
(32) Priority Date	:NA
(33) Name of priority country	:NA
(86) International Application No	:NA
Filing Date	:NA
(87) International Publication No	: NA
(61) Patent of Addition to Application Number	:NA
Filing Date	:NA
(62) Divisional to Application Number	:NA
Filing Date	:NA

(71)**Name of Applicant :**
1)ZEP INTERNATIONAL LIMITED
Address of Applicant :SEA MEADOW HOUSE, BLACKBURNE HIGHWAY P.O. BOX: 116, ROAD TOWN, TORTOLA, BRITISH VIRGIN ISLANDS, UNITED KINGDOM
(72)**Name of Inventor :**
1)LUNAVAT, ANUPAM PREMCHAND

(57) Abstract :
A novel composite board is disclosed herein. It comprises of a three layer polypropylene (PP) based hollow honey-comb type sandwich board and plurality of self-reinforced polypropylene (SRPP) sheets. The PP board and said SRPP sheets are bonded in simultaneously and resulting product is laminated. The PP board is thermally bonded with SRPP sheets on both the sides.

No. of Pages : 10 No. of Claims : 6

(12) PATENT APPLICATION PUBLICATION
(19) INDIA
(22) Date of filing of Application :26/03/2011
(21) Application No.907/MUM/2011 A
(43) Publication Date : 21/03/2014

(54) Title of the invention : IMPROVED CURRENT TRANSFORMERS FOR CIRCUIT BREAKERS

(51) International classification	:H01F27/30, H01F17/06
(31) Priority Document No	:NA
(32) Priority Date	:NA
(33) Name of priority country	:NA
(86) International Application No	:NA
Filing Date	:NA
(87) International Publication No	: NA
(61) Patent of Addition to Application Number	:NA
Filing Date	:NA
(62) Divisional to Application Number	:NA
Filing Date	:NA

(71)**Name of Applicant :**
1)LARSEN & TOUBRO LIMITED
Address of Applicant :L & T House Ballard Estate Mumbai 400 001 MAHARASHTRA, INDIA
(72)**Name of Inventor :**
1)DESHPANDE Prachi S.;

(57) Abstract :
This invention relates generally to a current transformer. More particularly present invention relates to an improved current transformer for circuit breakers used in measurement and powering. Said current transformer comprising a shunt branch of substantially high magnetic permeability, a rod of substantially low permeability placed to bypass magnetic flux at higher current levels; a core (4) of substantially low permeability; and a secondary coil (5) wound on a substantially high magnetic material (1) and a main conductor (3) forming a bypass path (2).

No. of Pages : 13 No. of Claims : 6

(12) PATENT APPLICATION PUBLICATION
(19) INDIA
(22) Date of filing of Application :26/03/2011

(21) Application No.908/MUM/2011 A
(43) Publication Date : 21/03/2014

(54) Title of the invention : IMPROVED CIRCUIT BREAKER ARRANGEMENT ENSURING LOWER TEMPERATURE RISE

(51) International classification	:H01H71/16, H01H71/40
(31) Priority Document No	:NA
(32) Priority Date	:NA
(33) Name of priority country	:NA
(86) International Application No	:NA
Filing Date	:NA
(87) International Publication No	: NA
(61) Patent of Addition to Application Number	:NA
Filing Date	:NA
(62) Divisional to Application Number	:NA
Filing Date	:NA

(71)**Name of Applicant :**
1)LARSEN & TOUBRO LIMITED
Address of Applicant :L & T House Ballard Estate Mumbai 400 001 MAHARASHTRA, INDIA
(72)**Name of Inventor :**
1)KAMAT Sudhir S.;
2)PURANDARE Kedar R.;

(57) Abstract :
This invention relates generally to a circuit breaker arrangement. More particularly, the invention relates to an improved circuit breaker arrangement ensuring lower temperature rise. An improved circuit breaker arrangement ensuring lower temperature rise, wherein said arrangement comprising plurality of graphite sheets (4) adapted to provide thermal stabilization to said circuit breaker. Also, graphite sheet placed vertically at copper braid crimping region thereby improving vertical convective heat transfer coefficient. Reduction in copper volume used for manufacturing of the circuit breakers is one of main advantage of present invention.

No. of Pages : 14 No. of Claims : 8

(12) PATENT APPLICATION PUBLICATION
(19) INDIA
(22) Date of filing of Application :21/03/2011
(21) Application No.804/MUM/2011 A
(43) Publication Date : 21/03/2014

(54) Title of the invention : IMPROVED PIVOT JOINT ASSEMBLY FOR USE IN ELECTRICAL SWITCHING DEVICES

(51) International classification	:H01H71/70, H01H71/56, H01H71/02
(31) Priority Document No	:NA
(32) Priority Date	:NA
(33) Name of priority country	:NA
(86) International Application No	:NA
Filing Date	:NA
(87) International Publication No	: NA
(61) Patent of Addition to Application Number	:NA
Filing Date	:NA
(62) Divisional to Application Number	:NA
Filing Date	:NA

(71)**Name of Applicant :**
1)LARSEN & TOUBRO LIMITED
Address of Applicant :L & T House Ballard Estate Mumbai 400 001 MAHARASHTRA, INDIA
(72)**Name of Inventor :**
1)SINGH Sukhjinder
2)SENGUPTA Himadri D.
3)AMBOKAR Prashant P.
4)DAVE Mahendra C.

(57) Abstract :
This invention relates generally to switching devices and more particularly to an improved pivot joint assembly for use in electrical switching devices to reduce friction and increasing consistency of transmitted forces. Said assembly comprising a shaft; a link assembly having a needle roller bearing attached therein; a bush; a spring means exerting force thereby locking said link assembly; wherein said link assembly and said shaft forming an oscillating pivoted joint and said needle roller adapted to roll over said shaft under load during mechanism operation.

No. of Pages : 17 No. of Claims : 6

(12) PATENT APPLICATION PUBLICATION
(19) INDIA
(22) Date of filing of Application :21/03/2011
(21) Application No.805/MUM/2011 A
(43) Publication Date : 21/03/2014

(54) Title of the invention : IMPROVED MECHANISM TO OPERATE CONTACTS OF A CIRCUIT BREAKER

(51) International classification	:H01H71/52, H01H71/02
(31) Priority Document No	:NA
(32) Priority Date	:NA
(33) Name of priority country	:NA
(86) International Application No	:NA
Filing Date	:NA
(87) International Publication No	: NA
(61) Patent of Addition to Application Number	:NA
Filing Date	:NA
(62) Divisional to Application Number	:NA
Filing Date	:NA

(71)**Name of Applicant :**
1)LARSEN & TOUBRO LIMITED
Address of Applicant :L & T House Ballard Estate Mumbai 400 001 MAHARASHTRA, INDIA
(72)**Name of Inventor :**
1)V. Praveen Kumar Deepak
2)N. Prabhu
3)L. Arvind Kumar

(57) Abstract :
This invention relates generally to circuit breakers and more particularly to an improved mechanism to operate contacts of a circuit breaker, improved mechanism to operate contacts of a circuit breaker, said mechanism comprising atleast one mounting plate, said mounting plate providing a profile to facilitate mounting; atleast one knob attached to a fork mounted on said profile, said fork blocked in trip position using a reset pin; atleast one trip lever hinged on said mounting plate using a trip lever pin; atleast one upper link connected to each side of said trip lever using an upper link pin; atleast one lower link connected to a connecting link using lower link-connecting link pin (24) etc. Invention provides a mechanism universal to use for any types of modular or non-modular contact system having different drive points.

No. of Pages : 20 No. of Claims : 10

(12) PATENT APPLICATION PUBLICATION
(19) INDIA
(22) Date of filing of Application :23/03/2011
(21) Application No.860/MUM/2011 A
(43) Publication Date : 21/03/2014

(54) Title of the invention : A NOVEL CONTROLLED RELEASE GASTRORETENTIVE DOSAGE FORMS OF PREGABALIN

(51) International classification	:A61K9/00, A61K47/38, A61K31/197
(31) Priority Document No	:NA
(32) Priority Date	:NA
(33) Name of priority country	:NA
(86) International Application No	:NA
Filing Date	:NA
(87) International Publication No	: NA
(61) Patent of Addition to Application Number	:NA
Filing Date	:NA
(62) Divisional to Application Number	:NA
Filing Date	:NA

(71)**Name of Applicant :**
1)FDC LIMITED
Address of Applicant :142-48, S.V. ROAD, JOGESHWARI (W), MUMBAI - 400 102, MAHARASHTRA, INDIA
(72)**Name of Inventor :**
1)CHANDAVARKAR, NANDAN MOHAN
2)JINDAL, KOUR CHAND
3)MALAYANDI, RAJKUMAR
4)RAGHOJI, SAGAR SUDHIR

(57) Abstract :
The present invention discloses a controlled release gastroretentive dosage form of pregabalin comprising pregabalin and optionally methylcobalamin, in a floating swellable matrix system comprising hydrophilic swellable polymers, in-situ gelling agents, superdisintergrant(s) and other pharmaceutically acceptable excipients.

No. of Pages : 20 No. of Claims : 10

(12) PATENT APPLICATION PUBLICATION
(19) INDIA
(22) Date of filing of Application :16/04/2011
(21) Application No.1249/MUM/2011 A
(43) Publication Date : 21/03/2014

(54) Title of the invention : PROCESS FOR PURIFICATION OF MONOISOAMYL MESO-2,3-DIMERCAPTOSUCCINATE (MIADMSA)

(51) International classification	:A61K51/00	
(31) Priority Document No	:NA	
(32) Priority Date	:NA	
(33) Name of priority country	:NA	
(86) International Application No	:NA	
Filing Date	:NA	
(87) International Publication No	: NA	
(61) Patent of Addition to Application Number	:NA	
Filing Date	:NA	
(62) Divisional to Application Number	:NA	
Filing Date	:NA	

(71)**Name of Applicant :**
1)CADILA PHARMACEUTICALS LIMITED
Address of Applicant :Cadila Corporate Campus Sarkhej - Dholka Road Bhat Ahmedabad - 382210 Gujarat INDIA
(72)**Name of Inventor :**
1)KHAMAR Bakulesh Mafatlal
2)SHARMA Arun Omprakash
3)MATHUKIYA Hitesh Valjibhai
4)MEHTA Hiten Sharadchandra
5)CHOWDHARY Anil
6)MODI Indravadan Ambalal

(57) Abstract :
The present invention provides a process for the preparation of monoisoamyl meso-2, 3-dimercaptosuccinate (MiADMSA) with high purity wherein purification of monoisoamyl meso-2, 3-dimercaptosuccinate (MiADMSA) is carried out using a solvent mixture of hydrocarbon and ether.

No. of Pages : 9 No. of Claims : 10

(12) PATENT APPLICATION PUBLICATION
(19) INDIA
(22) Date of filing of Application :28/02/2011
(21) Application No.540/MUM/2011 A
(43) Publication Date : 21/03/2014

(54) Title of the invention : BODY REVIVAL

(51) International classification	:A61k 36/00
(31) Priority Document No	:NA
(32) Priority Date	:NA
(33) Name of priority country	:NA
(86) International Application No	:NA
Filing Date	:NA
(87) International Publication No	:N/A
(61) Patent of Addition to Application Number	:NA
Filing Date	:NA
(62) Divisional to Application Number	:NA
Filing Date	:NA

(71)**Name of Applicant :**
1)MUNIR KHAN
Address of Applicant :C/O MOH. AHMAD BAKSH KHAN, RAJ CLASSIC, A WING, FLAT NO 1403/1404, OFF YARI ROAD, VERSOWA, ANDHARI (W), MUMBAI-61 Maharashtra India
(72)**Name of Inventor :**
1)MUNIR KHAN

(57) Abstract :
This invention relates to body revival comprising of fruit pulp of Bilv (Aegle marmelos), Rhizome of Vach (Acorus calamus), Roots of Kushtha (Saussurea lappa), Whole plant of Kukranda (Blumea lacera), Leaves of Chukrika (Rumex vericarius), Root of Manjistha (Rubia cordifolia), Seed of Madhufala (Cucumis melo), Bark of Lodhra (Symplocos racemosa) and honey.

No. of Pages : 12 No. of Claims : 4

(12) PATENT APPLICATION PUBLICATION
(19) INDIA
(22) Date of filing of Application :21/03/2011

(21) Application No.799/MUM/2011 A
(43) Publication Date : 21/03/2014

(54) Title of the invention : AN IMPROVED RACKING SYSTEM FOR USE IN SWITCHGEARS

(51) International classification :H01L23/00, H02B1/00
(31) Priority Document No :NA
(32) Priority Date :NA
(33) Name of priority country :NA
(86) International Application No :NA
Filing Date :NA
(87) International Publication No : NA
(61) Patent of Addition to Application Number :NA
Filing Date :NA
(62) Divisional to Application Number :NA
Filing Date :NA

(71)**Name of Applicant :**
1)LARSEN & TOUBRO LIMITED
Address of Applicant :L & T House Ballard Estate Mumbai 400 001 MAHARASHTRA, INDIA
(72)**Name of Inventor :**
1)PATANKAR Shreeyash
2)KHAN Akram
3)DONGARE Vishal
4)SWAMI Ganpat Nagayyappa

(57) Abstract :
The present invention relates to an improved racking system for use in draw-out breakers. The system comprises a shaft means (1) ; at least one pinion means (11) operatively connected with said shaft means ; a racking means (2) operatively connected with said pinion means and mounted on a racking screw (6) ; a support means (5); a position indicator means (3) attached with said support means and display means (4) operatively connected with said position indicator means to indicate the various positions of the rack means, said display means having plurality of display positions to display the various rack means positions. The position indicator means comprises a position indicator engagement end (33) operatively connected with said position indicator profile ; a pivot (31) connected with said engagement end and a display end (32).

No. of Pages : 20 No. of Claims : 8

(12) PATENT APPLICATION PUBLICATION
(19) INDIA
(22) Date of filing of Application :29/03/2011
(21) Application No.960/MUM/2011 A
(43) Publication Date : 21/03/2014

(54) Title of the invention : PROCESS AND TOOLING FOR MANUFACTURING CYLINDER HEAD INTEGRATED WITH INTAKE MANIFOLD

(51) International classification	:F02M25/07, F02M35/104
(31) Priority Document No	:NA
(32) Priority Date	:NA
(33) Name of priority country	:NA
(86) International Application No	:NA
Filing Date	:NA
(87) International Publication No	: NA
(61) Patent of Addition to Application Number	:NA
Filing Date	:NA
(62) Divisional to Application Number	:NA
Filing Date	:NA

(71)**Name of Applicant :**
1)BAJAJ AUTO LIMITED
Address of Applicant :AKURDI, PUNE - 411035, STATE OF MAHARASHTRA, INDIA
(72)**Name of Inventor :**
1)GORDE SANJAY MARUTI
2)KALE AMOL SUDHAKAR
3)RANADE SANJAY MAHADEO

(57) Abstract :
A LPDC casting process and tooling for manufacturing cylinder head Integrated with intake manifold comprising sliding die blocks and a stationery die block; at least one sliding die block & one stationary die block forming the geometry/structure of intake manifold including geometry of other portions of cylinder head surrounding the intake manifold and said die blocks having their axis substantially perpendicular to the axis of intake port of the cylinder head.

No. of Pages : 36 No. of Claims : 18

(12) PATENT APPLICATION PUBLICATION
(19) INDIA
(22) Date of filing of Application :26/03/2011
(21) Application No.911/MUM/2011 A
(43) Publication Date : 21/03/2014

(54) Title of the invention : ARC CHUTE ASSEMBLY FOR EXTINGUISHING ARC AND A METHOD THEREOF

(51) International classification :H01H9/36, H01H9/34
(31) Priority Document No :NA
(32) Priority Date :NA
(33) Name of priority country :NA
(86) International Application No :NA
Filing Date :NA
(87) International Publication No : NA
(61) Patent of Addition to Application Number :NA
Filing Date :NA
(62) Divisional to Application Number :NA
Filing Date :NA

(71)**Name of Applicant :**
1)LARSEN & TOUBRO LIMITED
Address of Applicant :L & T House Ballard Estate Mumbai 400 001 MAHARASHTRA, INDIA
(72)**Name of Inventor :**
1)NAHATA Deepak P.;
2)GADGIL Rohit;
3)ROY Jibanesh;
4)OCHANI DEEPAK M

(57) Abstract :
An arc chute assembly for electrical switching devices for extinguishing an electric arc, said arc chute assembly comprising a plurality of splitter plates stacked one above the other with one corner of said splitter plates chamfered, said splitter plates arranged such that said chamfered corner fall in alternate direction. It provides a method for arc quenching comprising the steps of generating magnetic field in the splitter plates due to flow of fault current; said magnetic field driving said arc in the said arc chute; generation of gas pressure inside arcing chamber due to arc plasma pushing said arc further inside said arc chute; chamfered corner of said splitter plate generating magnetic force. It finds its application in switching devices.

No. of Pages : 20 No. of Claims : 9

(12) PATENT APPLICATION PUBLICATION
(19) INDIA
(22) Date of filing of Application :29/03/2011
(21) Application No.970/MUM/2011 A
(43) Publication Date : 21/03/2014

(54) Title of the invention : MODIFIED RELEASE PHARMACEUTICAL COMPOSITION COMPRISING O-DESMETHYLVENLAFAXINE SUCCINATE

(51) International classification	:A61K 9/20, C07C215/64
(31) Priority Document No	:NA
(32) Priority Date	:NA
(33) Name of priority country	:NA
(86) International Application No	:NA
Filing Date	:NA
(87) International Publication No	: NA
(61) Patent of Addition to Application Number	:NA
Filing Date	:NA
(62) Divisional to Application Number	:NA
Filing Date	:NA

(71)**Name of Applicant :**
1)GLENMARK GENERICS LIMITED
Address of Applicant :B/2, MAHALAXMI CHAMBERS, 22 BHULABHAI DESAI ROAD. MUMBAI-400709, Maharashtra India
(72)**Name of Inventor :**
1)HUDA, INDERJEET SINGH
2)RUDRAKANTHWAR, SUHAS
3)AGA, HIDAYTULLA
4)MEHTA, KAMAL

(57) Abstract :
The present invention relates to modified release pharmaceutical composition comprising O-desmethylvenlafaxine succinate less than 27% by weight of the composition.

No. of Pages : 20 No. of Claims : 7

.

CONTINUED TO PART- 2

(12) PATENT APPLICATION PUBLICATION
(21) Application No.1750/CHE/2012 A
(19) INDIA
(22) Date of filing of Application :07/05/2012
(43) Publication Date : 21/03/2014

(54) Title of the invention : A SYSTEM AND METHOD OF PROVIDING SECURITY TO CLOUD DATA TO PREVENT UNAUTHORIZED ACCESS

(51) International classification :G06F
(31) Priority Document No :NA
(32) Priority Date :NA
(33) Name of priority country :NA
(86) International Application No :NA
Filing Date :NA
(87) International Publication No : NA
(61) Patent of Addition to Application Number :NA
Filing Date :NA
(62) Divisional to Application Number :NA
Filing Date :NA

(71)**Name of Applicant :**
1)SAMSUNG ELECTRONICS COMPANY
Address of Applicant :416 MAETAN-DONG, YEONGTONG-GU, SUWON-SI, GYEONGGI-DO 442-742 Republic of Korea
(72)**Name of Inventor :**
1)SARIYA ANSARI
2)MANOJ KHANDELWAL
3)SUMIT AGGARWAL
4)VARUN MAHAJAN

(57) Abstract :
A method and system for providing security to cloud data to prevent unauthorized access is provided. The method includes identifying an environment of a client, determining an address size and an address range of a memory, for example, a virtual memory, a flash memory or a RAM, storing a process state of a cloud process, monitoring the cloud process to ensure accessibility of the cloud process into the cloud for delivering the cloud service to the client and protecting the cloud service from the unauthorized access. The system includes a communication interface for establishing communication, a memory that stores instructions and a processor responsive to the instructions to identify an environment, determine an address size and an address range of a virtual memory, store a process state of a cloud process, monitor the cloud process and protect the cloud service from the unauthorized access.

No. of Pages : 51 No. of Claims : 7

(12) PATENT APPLICATION PUBLICATION
(19) INDIA
(22) Date of filing of Application :07/05/2012
(21) Application No.1751/CHE/2012 A
(43) Publication Date : 21/03/2014

(54) Title of the invention : A SYSTEM AND METHOD FOR OBTAINING A DEVICE MANAGEMENT CONFIGURATION BASED ON DISTRIBUTED USER EXPERIENCE

(51) International classification :G06F
(31) Priority Document No :NA
(32) Priority Date :NA
(33) Name of priority country :NA
(86) International Application No :NA
Filing Date :NA
(87) International Publication No : NA
(61) Patent of Addition to Application Number :NA
Filing Date :NA
(62) Divisional to Application Number :NA
Filing Date :NA

(71)**Name of Applicant :**
1)SAMSUNG ELECTRONICS COMPANY
Address of Applicant :416 MAETAN-DONG, YEONGTONG-GU, SUWON-SI, GYEONGGI-DO 442-742 Republic of Korea
(72)**Name of Inventor :**
1)REVOTI PRASAD BORA

(57) Abstract :
A method and system for obtaining a device management configuration based on distributed user experience is provided. A method includes receiving an input from a first user, determining preferences of the first user based on a first user context, identifying multiple users associated with a corresponding device settings, ranking the multiple users based on a level of similarity between preferences associated with multiple users, the context of the multiple users, the preferences of the first user and the first user context, determining a second set of users based on the ranking, fetching device settings corresponding to the second set of users, performing a security check for the device settings and recommending, to the first user, the device settings. The system includes a user interface module, a context module, a network module, a ranking module, a recommendation module for recommending device settings and a communication interface for establishing communication.

No. of Pages : 27 No. of Claims : 9

(12) PATENT APPLICATION PUBLICATION
(19) INDIA
(22) Date of filing of Application :30/01/2008
(21) Application No.244/CHE/2008 A
(43) Publication Date : 21/03/2014

(54) Title of the invention : A NOVEL METHOD OF IN SITU NEAR FIELD ANTENNA PATTERN MEASUREMENT

(51) International classification :H01Q7/00
(31) Priority Document No :NA
(32) Priority Date :NA
(33) Name of priority country :NA
(86) International Application No :NA
Filing Date :NA
(87) International Publication No : NA
(61) Patent of Addition to Application Number :NA
Filing Date :NA
(62) Divisional to Application Number :NA
Filing Date :NA

(71)**Name of Applicant :**
1)INDIAN SPACE RESEARCH ORGANISATION
Address of Applicant :INDIAN SPACE RESEARCH ORGANISATION (ISRO) HEADQUARTERS, AN INDIAN GOVERNMENT ORGANIZATION ANTARIKSH BHAVAN NEW B.E.L ROAD BANGALORE 560 094 Karnataka India
(72)**Name of Inventor :**
1)TAPAN MISRA
2)RAKESH BHAN
3)DEEPAK PUTREVU
4)NIDHI CHAWLA
5)DILIP B DAVE

(57) Abstract :
This invention relates to a system for converting Near Field Antenna data into Far Field antenna pattern. It consists of exciting means to execute an antenna by chirped/FMC W pulse, recording means for simultaneous recording of signals from the antenna and sample reference signals, compression means to separate and compress the signals to a hologram depicting the amplitude and phase distribution of antenna illumination function and transforming means to project and transforming said hologram to obtain far field antenna pattern.

No. of Pages : 12 No. of Claims : 3

(12) PATENT APPLICATION PUBLICATION
(19) INDIA
(22) Date of filing of Application :09/04/2012
(21) Application No.3147/CHENP/2012 A
(43) Publication Date : 21/03/2014

(54) Title of the invention : INFORMATION PROCESSING APPARATUS, TUNER, AND INFORMATION PROCESSING METHOD

(51) International classification :H04N7/173
(31) Priority Document No :2009-249940
(32) Priority Date :30/10/2009
(33) Name of priority country :Japan
(86) International Application No :PCT/JP2010/006353
Filing Date :27/10/2010
(87) International Publication No :WO 2011/052199 A1
(61) Patent of Addition to Application Number :NA
Filing Date :NA
(62) Divisional to Application Number :NA
Filing Date :NA

(71)**Name of Applicant :**
1)SONY COMPUTER ENTERTAINMENT INC.
Address of Applicant :1-7-1, KONAN, MINATO-KU, TOKYO 1080075 Japan
(72)**Name of Inventor :**
1)NISHIZAWA, MANABU
2)KOBAYASHI, YUKI
3)ISHIZUKA, KENSAKU
4)HAYASHI, MASAKAZU
5)UMEDA, KOUJI
6)MORIYAMA, TAKAHIRO

(57) Abstract :
An information processing apparatus (11) comprises a portal screen display unit (80) that causes a display (14) to display a portal screen as a portal to a plurality of screens related to the viewing of programs; an index value obtaining unit (68) that obtains, from an information management server (16), index values that indicate the number of viewers viewing a program being broadcasted; and a popularity determining unit (70) that determines the degree of popularity of the program being broadcasted, according to the index values. The portal screen display unit (80) causes the portal screen to display an object that is to be selected when switching to a screen for viewing the program being broadcasted, and information indicating the degree of popularity of the program.

No. of Pages : 96 No. of Claims : 12

(12) PATENT APPLICATION PUBLICATION
(19) INDIA
(22) Date of filing of Application :09/03/2009
(21) Application No.1321/CHENP/2009 A
(43) Publication Date : 21/03/2014

(54) Title of the invention : MICROSPHERE CATALYST FOR CONVERSION OF OXYGEN CONTAINING COMPOUNDS TO OLEFINE AND PREPARATION METHOD THEREOF

(51) International classification :B01J29/85,B01J37/04
(31) Priority Document No :200610089171.1
(32) Priority Date :08/08/2006
(33) Name of priority country :China
(86) International Application No :PCT/CN2007/002309
Filing Date :31/07/2007
(87) International Publication No :WO 2008/019579 A1
(61) Patent of Addition to Application Number :NA
Filing Date :NA
(62) Divisional to Application Number :NA
Filing Date :NA

(71)**Name of Applicant :**
1)DALIAN INSTITUTE OF CHEMICAL PHYSICS, CHINESE ACADEMY OF SCIENCES
Address of Applicant :457 ZHONGSHAN ROAD, DALIAN, LIAONING 116023, P.R. China
(72)**Name of Inventor :**
1)LIU, ZHONGMIN
2)TIAN, PENG
3)XU, LEI
4)YANG, LIXIN
5)LV, ZHIHUI
6)QI, YUE
7)HE, CHANGQING
8)WEI, YINGXU
9)ZHANG, JINLING
10)MENG, SHUANGHE
11)LI, MINGZHI
12)YUAN, CUIYU
13)WANG, XIANGAO
14)YANG, YUE
15)LU, XIAO
16)ZHU, SHUKUI
17)XIE, PENG
18)SUN, XINDE
19)YANG, HONGYI
20)WANG, HUA
21)LI, BING

(57) Abstract :
This invention relates to a microsphere catalyst for the conversion of oxygen-containing compounds to olefins and the preparation method thereof. The catalyst system is consisted of silicon oxide, phosphorus oxide and alumina, and can simultaneously contain alkaline earth metal oxide and transition metal oxide. The mass contents of respective components are: 2-60% of silicon oxide, 8-50% of phosphorus oxide, 20-70% of alumina, 0-10% of alkaline earth meta! oxide, 0-20% of transition metal oxide, and the sum of the mass contents for all the components is 100%. The invention is characterized in using a special silicoaluminophosphate molecular sieve or a transition metal-containing silicoaluminophosphate molecular (such as SAPO-34) as an active component of the catalyst, and mixing the same with other raw materials containing respective oxide components and an organic compound acting as pore-forming agent (such as natural product sesbania powder) to prepare a slurry with a certain solid content. After a sufficient colloid-milling, the product is spray dried and calcined at high temperature, and therefore a microsphere catalyst with a wearing index less than 2 is obtained.

No. of Pages : 21 No. of Claims : 18

(12) PATENT APPLICATION PUBLICATION
(19) INDIA
(22) Date of filing of Application :12/04/2012
(21) Application No.3270/CHENP/2012 A
(43) Publication Date : 21/03/2014

(54) Title of the invention : COMPOUNDS FOR THE TREATMENT OF HEPATITIS C

(51) International classification :C07D487/08, A61K31/53
(31) Priority Document No :61/251,466
(32) Priority Date :14/10/2009
(33) Name of priority country :U.S.A.
(86) International Application No :PCT/US2010/052610
Filing Date :14/10/2010
(87) International Publication No :WO 2011/047119 A1
(61) Patent of Addition to Application Number :NA
Filing Date :NA
(62) Divisional to Application Number :NA
Filing Date :NA

(71)**Name of Applicant :**
1)BRISTOL-MYERS SQUIBB COMPANY
Address of Applicant :P.O. BOX 4000, ROUTE 206 AND PROVINCE LINE ROAD, PRINCETON, NEW JERSEY 08543-4000 U.S.A.
(72)**Name of Inventor :**
1)WANG, TAO
2)PENDRI, ANNAPURNA
3)ZHANG, ZHONGXING
4)ZHAI, WEIXU
5)LI, GUO
6)GERRITZ, SAMUEL
7)SCOLA, PAUL MICHAEL
8)SUN, LI-QIANG
9)ZHAO, QIAN
10)MULL, ERIC

(57) Abstract :
The disclosure provides compounds of formula I, including pharmaceutically acceptable salts, as well as compositions and methods of using the compounds. The compounds have activity against hepatitis C virus (HCV) and may be useful in treating those infected with HCV.

No. of Pages : 166 No. of Claims : 13

(12) PATENT APPLICATION PUBLICATION
(19) INDIA
(22) Date of filing of Application :12/04/2012
(21) Application No.3271/CHENP/2012 A
(43) Publication Date : 21/03/2014

(54) Title of the invention : SPIROCYCLIC COMPOUNDS AS MODULATORS OF CHEMOKINE RECEPTOR ACTIVITY

(51) International classification :C07D401/12
(31) Priority Document No :61/249,364
(32) Priority Date :07/10/2009
(33) Name of priority country :U.S.A.
(86) International Application No :PCT/US2010/051577
Filing Date :06/10/2010
(87) International Publication No :WO 2011/044197 A1
(61) Patent of Addition to Application Number :NA
Filing Date :NA
(62) Divisional to Application Number :NA
Filing Date :NA

(71)**Name of Applicant :**
1)BRISTOL-MYERS SQUIBB COMPANY
Address of Applicant :P.O. BOX 4000, ROUTE 206 AND PROVINCE LINE ROAD, PRINCETON, NEW JERSEY 08543-4000 U.S.A.
(72)**Name of Inventor :**
1)DHAR, T.G. MURALI
2)DUNCIA, JOHN V.
3)GARDNER, DANIEL S.
4)GUO, WEIWEI
5)HYNES, JOHN

(57) Abstract :
The present application describes modulators of chemokine receptor activity of formula or stereoisomers or pharmaceutically acceptable salts thereof. In addition, methods of treating and preventing inflammatory diseases such as asthma and allergic diseases, as well as autoimmune pathologies such as rheumatoid arthritis and transplant rejection using modulators of formula (I) are disclosed.

No. of Pages : 92 No. of Claims : 9

(12) PATENT APPLICATION PUBLICATION
(19) INDIA
(22) Date of filing of Application :18/09/2012
(21) Application No.3872/CHE/2012 A
(43) Publication Date : 21/03/2014

(54) Title of the invention : A USER FRIENDLY, COMFORTABLE AND SAFE HELMET WHICH ALSO REINFORCES THE SPINNE AND NECK MUSCLES

(51) International classification :A42B3/00
(31) Priority Document No :NA
(32) Priority Date :NA
(33) Name of priority country :NA
(86) International Application No :NA
Filing Date :NA
(87) International Publication No : NA
(61) Patent of Addition to Application Number :NA
Filing Date :NA
(62) Divisional to Application Number :NA
Filing Date :NA

(71)**Name of Applicant :**
1)NEETHALA MITTU
Address of Applicant :VARSHA NIKETAN, 39/1, MARIAPPA KONAR STREET, NEAR ARASAN THEATRE, PODANUR COIMBATORE - 641 023 Tamil Nadu India
(72)**Name of Inventor :**
1)NEETHALA MITTU

(57) Abstract :
PROBLEM Existing helmet do not protect the spine and neck region in any way. With the added mass of the helmet now on the head it pivots on the pivot joint attached to the slender cervical vertebrae. This unprotected area is very prone and vulnerable to serious injury that can impair several cognitive functions in the event of a accident. Moreover, this helmet is not comfortable to wear as it is (1) heavily padded internally and (2) the weight of the helmet and with the same being strapped will block air vents even if provided. SOLUTION Here this improved helmet IH is lifted off the head by two parallel restraints the chest restraint CR , back restraint BR with shoulder pads SP at its base and a plastic ring PR with lining L at its upper forehead level, With the heat generating polymer now lining the outer surface area of the shell, there is annular space all-round the head to provide air vents. This helmet is now braced by underarm straps.

No. of Pages : 26 No. of Claims : 2

(12) PATENT APPLICATION PUBLICATION
(19) INDIA
(22) Date of filing of Application :04/07/2012
(21) Application No.5891/CHENP/2012 A
(43) Publication Date : 21/03/2014

(54) Title of the invention : SYNDICATION OF MULTIPLE SERVICE INSTANCES

(51) International classification :G06F15/16,G06F9/06,G06F13/14
(31) Priority Document No :12/685,577
(32) Priority Date :11/01/2010
(33) Name of priority country :U.S.A.
(86) International Application No :PCT/US2010/062644
Filing Date :31/12/2010
(87) International Publication No :WO 2011/084874 A3
(61) Patent of Addition to Application Number :NA
Filing Date :NA
(62) Divisional to Application Number :NA
Filing Date :NA

(71)**Name of Applicant :**
1)MICROSOFT CORPORATION
Address of Applicant :One Microsoft Way Redmond Washington 98052 6399 U.S.A.
(72)**Name of Inventor :**
1)DAUGHERTY Brian R.
2)COPPARAM Srivaths B.
3)CALLAHAN David S.

(57) Abstract :
Service provisioning tasks can be performed to provision or deprovision services for users reconcile overlapping services and apply effective service properties. A service can be provisioned by receiving a request to provision the service for a user reconciling new service properties with current service properties from one or more service instances to determine effective service properties and applying the effective service properties as properties to use for the service for the user. A service can also be provisioned by receiving a request to provision the service for a user storing a new service instance and reconciling the new service instance with one or more previously stored service instances for the same service to determine effective service properties. A service provisioning system can perform provisioning operations for one or more internal and external service providers.

No. of Pages : 37 No. of Claims : 15

(12) PATENT APPLICATION PUBLICATION
(19) INDIA
(22) Date of filing of Application :17/09/2012
(21) Application No.3861/CHE/2012 A
(43) Publication Date : 21/03/2014

(54) Title of the invention : A DEVICE AND METHOD FOR CONTROLLING THE MASS FLOW RATE OF AIR SUPPLIED TO AN ENGINE

(51) International classification :F02D9/00
(31) Priority Document No :NA
(32) Priority Date :NA
(33) Name of priority country :NA
(86) International Application No :NA
Filing Date :NA
(87) International Publication No : NA
(61) Patent of Addition to Application Number :NA
Filing Date :NA
(62) Divisional to Application Number :NA
Filing Date :NA

(71)**Name of Applicant :**
1)BOSCH LIMITED
Address of Applicant :POST BOX NO 3000, HOSUR ROAD, ADUGODI, BANGALORE - 560 030 Karnataka India
2)ROBERT BOSCH GMBH
(72)**Name of Inventor :**
1)PRADEEP R
2)PRAMOD R

(57) Abstract :
The present invention discloses a device 100 for controlling the position of a throttle flap 101in the intake path 106 of an engine. The device 100 comprises an adjustable screw 102 mechanically linked to a throttle flap 101. The position of the screw 102 adapted to adjust the movement of the throttle flap 101. A sensor 103 is adapted to sense the position of the throttle flap 101, and a means to determine the mass flow rate of the engine intake air using the throttle flap 101 position is provided.

No. of Pages : 9 No. of Claims : 10

(12) PATENT APPLICATION PUBLICATION
(19) INDIA
(22) Date of filing of Application :17/09/2012
(21) Application No.3862/CHE/2012 A
(43) Publication Date : 21/03/2014

(54) Title of the invention : A SYSTEM FOR MONITORING OBJECTS

(51) International classification :G06F21/00
(31) Priority Document No :NA
(32) Priority Date :NA
(33) Name of priority country :NA
(86) International Application No :NA
Filing Date :NA
(87) International Publication No : NA
(61) Patent of Addition to Application Number :NA
Filing Date :NA
(62) Divisional to Application Number :NA
Filing Date :NA

(71)**Name of Applicant :**
1)SATISH.V. DULIPATI
Address of Applicant :G-1, V.S. MANOR, NO.2, MANNAR STREET, T.NAGAR, CHENNAI - 600 017 Tamil Nadu India
(72)**Name of Inventor :**
1)SATISH.V. DULIPATI

(57) Abstract :
The present invention relates to an integrated, shareable, multi-user system for secure real-time monitoring of objects within and outside premises comprising: one or more Server Access Devices (SAD); one or more Internet enabled devices; one or more servers; and proprietary software remotely deployable from the server onto the SAD. The SAD is a shareable portable identity device comprising of two or more of object identity device (OID), location identity device (LID) and personal identity device (PID). The objects are monitored for the following without any restriction to location: entry and exit of objects within and outside a specific premise, transfer and possession of objects between individual users or departments and locations, time of verification or accessing and authentication of actions associated with objects, and removal, deletion and status of objects. Access to actions associated with the objects being monitored can be performed only by an authenticated user.

No. of Pages : 25 No. of Claims : 22

(12) PATENT APPLICATION PUBLICATION
(19) INDIA
(22) Date of filing of Application :28/11/2011
(21) Application No.4091/CHE/2011 A
(43) Publication Date : 21/03/2014

(54) Title of the invention : TACTOGRAPH

(51) International classification :G06F
(31) Priority Document No :NA
(32) Priority Date :NA
(33) Name of priority country :NA
(86) International Application No :NA
Filing Date :NA
(87) International Publication No : NA
(61) Patent of Addition to Application Number :NA
Filing Date :NA
(62) Divisional to Application Number :NA
Filing Date :NA

(71)**Name of Applicant :**
1)INDIAN INSTITUTE OF TECHNOLOGY MADRAS
Address of Applicant :IIT-MADRAS, GUINDY, CHENNAI 600 036 Tamil Nadu India
2)CHETANA CHARITABLE TRUST
(72)**Name of Inventor :**
1)NAMITA JACOB
2)ANIL PRABHAKAR
3)SUJATHA SRINIVASA

(57) Abstract :
The present invention relates to a device with semi-autonomous plotting mechanism for tactiling existing children's books, so that visually impaired children can perceive the pictures. The device includes a five bar plotter head with a five bar linkage with 2 degree of freedom, also called a pantograph, for tactiling pictures. Static actuators are provided to control the 2 degrees of freedom. A camera is provided above the pantograph and connected to a computer which directs the actuators to position the plotter head at specific locations or calibration points. An electronic circuit is used to control the pantograph and lower a pen with quick drying fluid to create a tactile picture. The device creates accessible reading material at a faster rate than manual process.

No. of Pages : 13 No. of Claims : 19

(12) PATENT APPLICATION PUBLICATION
(19) INDIA
(22) Date of filing of Application :16/07/2012
(21) Application No.6228/CHENP/2012 A
(43) Publication Date : 21/03/2014

(54) Title of the invention : MANAGING PRIVATE USE OF PROGRAM EXECUTION CAPACITY

(51) International classification :G06F9/46
(31) Priority Document No :12/686,273
(32) Priority Date :12/01/2010
(33) Name of priority country :U.S.A.
(86) International Application No :PCT/US2011/020665
Filing Date :10/01/2011
(87) International Publication No :WO 2011/087982 A1
(61) Patent of Addition to Application Number :NA
Filing Date :NA
(62) Divisional to Application Number :NA
Filing Date :NA

(71)**Name of Applicant :**
1)AMAZON TECHNOLOGIES INC.
Address of Applicant :P.O. Box 8102 Reno Nevada 89507 U.S.A.
(72)**Name of Inventor :**
1)BRANDWINE Eric Jason
2)GREENFIELD James Alfred Gordon

(57) Abstract :
Techniques are described for managing execution of programs including using excess program execution capacity of one or more computing systems. For example a private pool of excess computing capacity may be maintained for a user based on unused dedicated program execution capacity allocated for that user with the private pool of excess capacity being available for priority use by that user. Such private excess capacity pools may further in some embodiments be provided in addition to a general non private excess computing capacity pool that is available for use by multiple users optionally including users who are associated with the private excess capacity pools. In some such situations excess computing capacity may be made available to execute programs on a temporary basis such that the programs executing using the excess capacity may be terminated at any time if other preferred use for the excess capacity arises.

No. of Pages : 92 No. of Claims : 41

(12) PATENT APPLICATION PUBLICATION
(19) INDIA
(22) Date of filing of Application :16/05/2012
(21) Application No.4323/CHENP/2012 A
(43) Publication Date : 21/03/2014

(54) Title of the invention : FLUOROIMMUNOASSAY METHOD

(51) International classification :G01N33/533
(31) Priority Document No :2009-264420
(32) Priority Date :19/11/2009
(33) Name of priority country :Japan
(86) International Application No :PCT/JP2010/006809
Filing Date :19/11/2010
(87) International Publication No :WO 2011/061944 A1
(61) Patent of Addition to Application Number :NA
Filing Date :NA
(62) Divisional to Application Number :NA
Filing Date :NA

(71)**Name of Applicant :**
1)PROTEINEXPRESS CO., LTD.
Address of Applicant :1-8-15, INOHANA, CHUO-KU, CHIBA-SHI, CHIBA-260-0856 Japan
(72)**Name of Inventor :**
1)UEDA, HIROSHI
2)ABE, RYOJI
3)IHARA, MASAKI
4)TAKAGI, HIROAKI

(57) Abstract :
An object is to provide an immunoassay method requiring neither a solid-phase immobilization step nor a washing step, enabling quick and simple quantitative measurement of a target substance in a liquid phase and capable of visualizing an antigen. Such an object is attained by measuring the concentration of a target antigen present in a test substance by sequentially performing a step (a) of bringing an antibody light-chain variable region polypeptide and an antibody heavy-chain variable region polypeptide labeled with a fluorescent dye into contact with an antigen in a test substance in a liquid phase; or bringing an antibody heavy-chain variable region polypeptide and an antibody light-chain variable region polypeptide labeled with a fluorescent dye into contact with an antigen in a test substance in a liquid phase; a step (b) of measuring the fluorescence intensity of the fluorescent dye; and a step (c) of computationally obtaining the level of the antigen contained in the test substance with reference to a positive correlation between the concentration of the antigen in a liquid phase and the fluorescence intensity of the fluorescent dye.

No. of Pages : 105 No. of Claims : 12

(12) PATENT APPLICATION PUBLICATION
(19) INDIA
(22) Date of filing of Application :05/07/2012
(21) Application No.5925/CHENP/2012 A
(43) Publication Date : 21/03/2014

(54) Title of the invention : LEVITATING DISK

(51) International classification	:A63H33/18,A63H33/22,A63H27/04
(31) Priority Document No	:12/657,332
(32) Priority Date	:19/01/2010
(33) Name of priority country	:U.S.A.
(86) International Application No	:PCT/US2011/021481
Filing Date	:17/01/2011
(87) International Publication No	:WO 2011/090917 A1
(61) Patent of Addition to Application Number	:NA
Filing Date	:NA
(62) Divisional to Application Number	:NA
Filing Date	:NA

(71)**Name of Applicant :**
1)MESIKA Yigal
Address of Applicant :1619 North La Brea Los Angeles CA 90028 U.S.A.
(72)**Name of Inventor :**
1)MESIKA Yigal

(57) Abstract :
Described is a levitating disk for performing illusions of levitation. The disk includes a disk shaped housing with a circuit board microprocessor and batteries encased within the housing. A series of LEDs are connected with the housing and are activated via a centrifugal force switch. The circuit board and batteries are positioned within the housing such that they distribute the weight evenly from a central axis toward the periphery of the housing. A micro thread is included for attaching with the disk. Thus in operation a user can hang the disk with the micro thread and spin the disk about the central axis to cause the lights to illuminate and cause the disk to appear as if it is levitating.

No. of Pages : 31 No. of Claims : 19

(12) PATENT APPLICATION PUBLICATION
(19) INDIA
(22) Date of filing of Application :05/07/2012
(21) Application No.5929/CHENP/2012 A
(43) Publication Date : 21/03/2014

(54) Title of the invention : CONTROLLING LIGHT SOURCES FOR COLOUR SEQUENTIAL IMAGE DISPLAYING

(51) International classification :H04N9/31,G09G3/34
(31) Priority Document No :61/292,314
(32) Priority Date :05/01/2010
(33) Name of priority country :U.S.A.
(86) International Application No :PCT/US2010/061867
Filing Date :22/12/2010
(87) International Publication No :WO 2011/084837 A1
(61) Patent of Addition to Application Number :NA
Filing Date :NA
(62) Divisional to Application Number :NA
Filing Date :NA

(71)**Name of Applicant :**
1)3M INNOVATIVE PROPERTIES COMPANY
Address of Applicant :3M Center Post Office Box 33427 Saint Paul Minnesota 55133 3427 U.S.A.
(72)**Name of Inventor :**
1)JESME Ronald D.
2)PHILLIPS William E. III
3)RUTHERFORD Todd S.

(57) Abstract :
Color sequential imaging involves illuminating for each of two or more time separated color fields two or more light sources. Each of the two or more light sources emits at different wavelengths and at least one of the first or second light sources is activated at different non zero current amplitudes during each of the first and second color fields. The color fields are projected via a spatial light modulator in synchronization with the activation of the at least one of the first or second light sources.

No. of Pages : 41 No. of Claims : 10

(12) PATENT APPLICATION PUBLICATION
(19) INDIA
(22) Date of filing of Application :16/07/2012
(21) Application No.6233/CHENP/2012 A
(43) Publication Date : 21/03/2014

(54) Title of the invention : HUMANIZED FC R MICE

(51) International classification :C07K14/705,A01K67/027
(31) Priority Document No :61/288, 562
(32) Priority Date :21/12/2009
(33) Name of priority country :U.S.A.
(86) International Application No :PCT/US2010/060925
Filing Date :17/12/2010
(87) International Publication No :WO 2011/084664
(61) Patent of Addition to Application Number :NA
Filing Date :NA
(62) Divisional to Application Number :NA
Filing Date :NA

(71)**Name of Applicant :**
1)REGENERON PHARMACEUTICALS INC.
Address of Applicant :777 Old Saw Mill River Road Tarrytown NY 10591 U.S.A.
(72)**Name of Inventor :**
1)MACDONALD Lynn
2)TU Naxin
3)GURER Cagan
4)STEVENS Sean
5)MURPHY Andrew J.

(57) Abstract :
Genetically modified non human animals and methods and compositions for making and using them are provided wherein the genetic modification comprises a deletion of the endogenous low affinity FcR locus and wherein the mouse is capable of expressing a functional FcR chain. Genetically modified mice are described including mice that express low affinity human FcR genes from the endogenous FcR locus and wherein the mice comprise a functional FcR chain. Genetically modified mice that express up to five low affinity human FcR genes on accessory cells of the host immune system are provided.

No. of Pages : 63 No. of Claims : 20

(12) PATENT APPLICATION PUBLICATION
(19) INDIA
(22) Date of filing of Application :18/09/2012
(21) Application No.3884/CHE/2012 A
(43) Publication Date : 21/03/2014

(54) Title of the invention : A SUPPLY MODULE FOR AN AQUEOUS SOLUTION DOSING AND PURGING SYSTEM

(51) International classification :F04B43/00
(31) Priority Document No :NA
(32) Priority Date :NA
(33) Name of priority country :NA
(86) International Application No :NA
Filing Date :NA
(87) International Publication No : NA
(61) Patent of Addition to Application Number :NA
Filing Date :NA
(62) Divisional to Application Number :NA
Filing Date :NA

(71)**Name of Applicant :**
1)ROBERT BOSCH ENGINEERING AND BUSINESS SOLUTIONS LIMITED
Address of Applicant :123, INDUSTRIAL LAYOUT, HOSUR ROAD, KORMANGALA, BANGALORE - 560 095 Karnataka India
2)ROBERT BOSCH GMBH
(72)**Name of Inventor :**
1)MOHANKUMAR KUPPUSAMY

(57) Abstract :
A supply module for an aqueous solution closing and purging system and a method of operating the supply module is disclosed. The supply module 10 comprises a plurality of diaphragm pumps 14a and 14b. The supply module is characterized by a cam 16 adapted to drive the plurality of diaphragm pumps 14a and 14b and a locking mechanism 18 adapted to lock at least one component of the plurality of diaphragm pumps 14a and 14b in a dosing mode and a purging mode.

No. of Pages : 15 No. of Claims : 8

(12) PATENT APPLICATION PUBLICATION
(19) INDIA
(22) Date of filing of Application :18/09/2012
(21) Application No.3887/CHE/2012 A
(43) Publication Date : 21/03/2014

(54) Title of the invention : A METHOD AND SYSTEM FOR CONFIGURATION AND VISUALIZATION OF AN ENTIRE SYSTEM TOPOLOGY

(51) International classification :G06F11/00
(31) Priority Document No :NA
(32) Priority Date :NA
(33) Name of priority country :NA
(86) International Application No :NA
Filing Date :NA
(87) International Publication No : NA
(61) Patent of Addition to Application Number :NA
Filing Date :NA
(62) Divisional to Application Number :NA
Filing Date :NA

(71)**Name of Applicant :**
1)SCHNEIDER ELECTRIC INDUSTRIES SAS
Address of Applicant :35, RUE JOSEPH MONIER, F-92500 RUEIL MALMAISON France
(72)**Name of Inventor :**
1)ANANT SINGH
2)SANDIP MONDAL

(57) Abstract :
The present invention relates to a method and system for configuration and visualization of an entire system topology composed of various system components. The method comprises searching at least one tool plug-in module registered in a generic system configurator (GSC) module based on a compatible interface provided by the process tools. Tool configuration files are read by the GSC module to recognize interface, mode, communication format and service defined by the tool. Communication is established between the GSC module and the tool for accessing configuration and run time information of the tool. Overview, status and health of the system components of the entire topology are accessed by the GSC module. The system components of the entire system topology are configured, debugged and diagnosed in accordance with workflows defined by a user in the GSC module. Such method and system facilitates easy instantiation, debugging, diagnostics, troubleshooting and topology monitoring of complete status and health of the system components at runtime and engineering time and visualization of complete overview of the entire system topology using single tool. .

No. of Pages : 24 No. of Claims : 19

(12) PATENT APPLICATION PUBLICATION
(19) INDIA
(22) Date of filing of Application :27/06/2012
(21) Application No.5621/CHENP/2012 A
(43) Publication Date : 21/03/2014

(54) Title of the invention : MICROVALVE PROTECTION DEVICE AND METHOD OF USE FOR PROTECTION AGAINST EMBOLIZATION AGENT REFLUX

(51) International classification :A61F2/06
(31) Priority Document No :61/266,068
(32) Priority Date :02/12/2009
(33) Name of priority country :U.S.A.
(86) International Application No :PCT/US2010/058641
Filing Date :02/12/2010
(87) International Publication No :WO 2011/068924 A1
(61) Patent of Addition to Application Number :NA
Filing Date :NA
(62) Divisional to Application Number :NA
Filing Date :NA

(71)**Name of Applicant :**
1)SUREFIRE MEDICAL, INC.
Address of Applicant :8601 TURNPIKE DR., SUITE 206, WESTMINSTER, CO 80031 U.S.A.
(72)**Name of Inventor :**
1)CHOMAS, JAMES, E.
2)PINCHUK, LEONARD
3)MARTIN, JOHN
4)AREPALLY, ARAVIND
5)NAGLREITER, BRETT, E.
6)WELDON, NORMAN, R.
7)PINCHUK, BRYAN, M.

(57) Abstract :
An apparatus is provided that is useful in an embolization procedure and enables substantially unrestricted forward flow of blood in a vessel and reduces or stops reflux (regurgitation or backward flow) of embolization agents which are introduced into the blood. A method of using the apparatus is also provided.

No. of Pages : 79 No. of Claims : 71

(12) PATENT APPLICATION PUBLICATION
(19) INDIA
(22) Date of filing of Application :06/07/2012
(21) Application No.5987/CHENP/2012 A
(43) Publication Date : 21/03/2014

(54) Title of the invention : HEAT AND PRESSURE GENERATED DESIGN

(51) International classification :B32B21/08,B32B38/14,B44C5/04
(31) Priority Document No :10500403
(32) Priority Date :15/01/2010
(33) Name of priority country :Sweden
(86) International Application No :PCT/SE2010/051475
Filing Date :22/12/2010
(87) International Publication No :WO 2011/087424 A1
(61) Patent of Addition to Application Number :NA
Filing Date :NA
(62) Divisional to Application Number :NA
Filing Date :NA

(71)**Name of Applicant :**
1)CERALOC INNOVATION BELGIUM BVBA
Address of Applicant :IT Tower Avenue Louise 480 B 1050 Brussels Belgium
(72)**Name of Inventor :**
1)ZIEGLER Gran
2)LINDGREN Kent

(57) Abstract :
The disclosure relates to a wood fibre based panel with surfaces layer with lower parts which comprises less binders than the upper parts. Also disclosed is a method of manufacturing a building panel having a structured surface with a design that comprises colour variation in register with the structure obtained by a varying pressure distribution applied on the surface.

No. of Pages : 20 No. of Claims : 23

(12) PATENT APPLICATION PUBLICATION
(19) INDIA
(22) Date of filing of Application :16/07/2012
(21) Application No.6222/CHENP/2012 A
(43) Publication Date : 21/03/2014

(54) Title of the invention : A PROGRAMMABLE CYLINDER LOCK HAVING A MODIFIED CHANGE POSITION

(51) International classification :E05B29/04,E05B31/00,E05B27/10
(31) Priority Document No :TO 2010 A 000091
(32) Priority Date :10/02/2010
(33) Name of priority country :Italy
(86) International Application No :PCT/EP2010/007623
Filing Date :08/12/2010
(87) International Publication No :WO 2011/098109
(61) Patent of Addition to Application Number :NA
Filing Date :NA
(62) Divisional to Application Number :NA
Filing Date :NA

(71)**Name of Applicant :**
1)RIELDA SERRATURE S.R.L.
Address of Applicant :Via Fiumara 80 I 00054 Fiumicino (Province of Roma) Italy
(72)**Name of Inventor :**
1)LORETI Alberto

(57) Abstract :
A lock with a programming device comprising a stator (1) a rotor (2) mounted inside the stator (1) a keyhole for a key (3) a longitudinal groove of stator (1) a series of key followers (4) and a series of locking pins (6) which under control of a change bar (11) can be mutually engaged for the normal operation or disengaged in a change position and which can be made movable or blocked under control of a stop bar (9) provided with springs which stress the same outwards characterized in that there are provided two separate grooves a change groove (12) and a stop groove (14) machined in rotor (2) and that said grooves and the stop bar (9) and change bar (11) have such conformations that are positively prevented the cooperation of the stop bar (9) with the change groove (12) and the cooperation of the change bar (11) with the stop groove (14).

No. of Pages : 10 No. of Claims : 5

(12) PATENT APPLICATION PUBLICATION
(19) INDIA
(22) Date of filing of Application :18/09/2012
(21) Application No.3890/CHE/2012 A
(43) Publication Date : 21/03/2014

(54) Title of the invention : INSTANT GROUNDNUT CHUTNEY POWDER

(51) International classification :A23L1/00
(31) Priority Document No :NA
(32) Priority Date :NA
(33) Name of priority country :NA
(86) International Application No :NA
Filing Date :NA
(87) International Publication No : NA
(61) Patent of Addition to Application Number :NA
Filing Date :NA
(62) Divisional to Application Number :NA
Filing Date :NA

(71)**Name of Applicant :**
1)MANNE RAJA
Address of Applicant :#1-840, NEAR SAMATA NURSING HOME, SUNDARAYYA NAGAR, MADHIRA MANDAL, MADHIRA - 507 203, KHAMMAM DISTRICT Andhra Pradesh India
(72)**Name of Inventor :**
1)MANNE RAJA

(57) Abstract :
This invention relates to a product instant Groundnut Chutney powder which is prepared on a large scale which involves various steps like frying, crushing, sieving, grinding and mixing various powder ingredients resulting in instant chutney powder.

No. of Pages : 15 No. of Claims : 11

(12) PATENT APPLICATION PUBLICATION
(19) INDIA
(22) Date of filing of Application :08/06/2012
(21) Application No.5036/CHENP/2012 A
(43) Publication Date : 21/03/2014

(54) Title of the invention : SELECTIVE IYSIS OF CELLS

(51) International classification :C12Q1/68
(31) Priority Document No :09178363.9
(32) Priority Date :08/12/2009
(33) Name of priority country :EPO
(86) International Application No :PCT/IB2010/055628
Filing Date :07/12/2010
(87) International Publication No :WO 2011/070507 A1
(61) Patent of Addition to Application Number :NA
Filing Date :NA
(62) Divisional to Application Number :NA
Filing Date :NA

(71)**Name of Applicant :**
1)BIOCARTIS SA
Address of Applicant :EPFL, PARC INNOVATION - G, 1015, LAUSANNE Switzerland
(72)**Name of Inventor :**
1)VAN MEERBERGEN, BART, EDWARD, GUSTA, JOZEF
2)PICIU, OANA, MIHAELA
3)GILL, RON
4)SCHMIDT, KRISTIANE, ANNE
5)NEERKEN, SIEGLINDE
6)PONJEE, MARC, WILHELMUS, GIJSBERT
7)UNAY, ZEYNEP, SEFLEK
8)PENTERMAN, ROEL
9)VAN DE WIEL, PAUL ARNOLD

(57) Abstract :
The present invention discloses methods and devices for the selective lysis of cells in a sample comprising micro-organisms such as bacteria. The selective lysis is obtained by incubating the sample in a non-ionic detergent under alkaline conditions.

No. of Pages : 26 No. of Claims : 15

(12) PATENT APPLICATION PUBLICATION
(19) INDIA
(22) Date of filing of Application :11/07/2012
(21) Application No.6084/CHENP/2012 A
(43) Publication Date : 21/03/2014

(54) Title of the invention : PHARMACEUTICAL FOR PREVENTING OR TREATING DISORDERS ACCOMPANIED BY OCULAR ANGIOGENESIS AND/OR ELEVATED OCULAR VASCULAR PERMEABILITY

(51) International classification	:A61K31/4188,A61K31/7088,A61K39/395
(31) Priority Document No	:2010006159
(32) Priority Date	:14/01/2010
(33) Name of priority country	:Japan
(86) International Application No	:PCT/JP2011/050472
Filing Date	:13/01/2011
(87) International Publication No	:WO 2011/087066 A1
(61) Patent of Addition to Application Number	:NA
Filing Date	:NA
(62) Divisional to Application Number	:NA
Filing Date	:NA

(71)**Name of Applicant :**
1)SANWA KAGAKU KENKYUSHO CO. LTD.
Address of Applicant :35 Higashisotobori cho Higashi ku Nagoya shi Aichi 4618631 Japan
2)Nagoya City University
(72)**Name of Inventor :**
1)OGURA Yuichiro
2)NOZAKI Miho
3)NAKAJIMA Atsushi
4)HIBI Chihiro

(57) Abstract :
A pharmaceutical for preventing or treating a disorder accompanied by ocular angiogenesis and/or increased ocular vascular permeability, constituted by a combination of an anti-VEGF agent, and a hydantoin derivative represented by a general formula (I): (in the formula, X represents a halogen atom or a hydrogen atom, and R and R simultaneously or individually represent a hydrogen atom or an optionally substituted Ci.6 alkyl group), or a pharmacologically acceptable salt thereof.

No. of Pages : 33 No. of Claims : 6

(12) PATENT APPLICATION PUBLICATION
(19) INDIA
(22) Date of filing of Application :18/07/2012
(21) Application No.6320/CHENP/2012 A
(43) Publication Date : 21/03/2014

(54) Title of the invention : QUALITY SENSOR APPARATUS

(51) International classification :G01N33/00,F01N3/20
(31) Priority Document No :0922464.3
(32) Priority Date :21/12/2009
(33) Name of priority country :U.K.
(86) International Application No :PCT/NO2010/000481
Filing Date :21/12/2010
(87) International Publication No :WO 2011/078692 A1
(61) Patent of Addition to Application Number :NA
Filing Date :NA
(62) Divisional to Application Number :NA
Filing Date :NA

(71)**Name of Applicant :**
1)WEMA SYSTEM AS
Address of Applicant :Johan Berentsensvei 41 N 5161 Laksevg Norway
(72)**Name of Inventor :**
1)FRIVIK Bj˜rn

(57) Abstract :
An apparatus (100) for measuring quality of a urea solution is operated with at least a portion of the apparatus inserted into the urea solution. The apparatus (100) includes a configuration of sensors (180 190 200) for measuring mechanical and electrical properties within a volume of the urea solution the measurements of mechanical and electrical properties being mutually differently influenced by components present in the urea solution. A data processing arrangement (230) of the apparatus (100) is operable to process the measurements of mechanical and electrical properties for generating output data (120) indicative of a quality of the urea solution. The apparatus (100) is also capable of being adapted to measure qualities of other types of solution.

No. of Pages : 29 No. of Claims : 12

(12) PATENT APPLICATION PUBLICATION
(19) INDIA
(22) Date of filing of Application :18/07/2012
(21) Application No.6321/CHENP/2012 A
(43) Publication Date : 21/03/2014

(54) Title of the invention : SHEET FILTER MATERIALS WITH ADDITIVES

(51) International classification :A24D3/14,A24D3/10,A24D3/16
(31) Priority Document No :0922253.0
(32) Priority Date :21/12/2009
(33) Name of priority country :U.K.
(86) International Application No :PCT/GB2010/052169
Filing Date :21/12/2010
(87) International Publication No:WO 2011/077138 A1
(61) Patent of Addition to Application Number :NA
Filing Date :NA
(62) Divisional to Application Number :NA
Filing Date :NA

(71)**Name of Applicant :**
1)BRITISH AMERICAN TOBACCO (INVESTMENTS) LIMITED
Address of Applicant :Globe House 1 Water Street London WC2R 3LA U.K.
(72)**Name of Inventor :**
1)RUSHFORTH David
2)SAMPSON John

(57) Abstract :
The present invention relates to the inclusion of additives in a filter element comprising a non woven sheet material or paper as the filter material to increase the selective removal of semi volatile compounds and to improve the taste characteristics of the smoke drawn through the filter element. The increased selective removal of semi volatile compounds from the smoke being drawn through the filter element is provided by polyethylene glycol. TEC and/or triacetin are additives which have been found to improve the taste characteristics of smoke drawn through the filter element.

No. of Pages : 39 No. of Claims : 14

(12) PATENT APPLICATION PUBLICATION
(19) INDIA
(22) Date of filing of Application :18/07/2012
(21) Application No.6324/CHENP/2012 A
(43) Publication Date : 21/03/2014

(54) Title of the invention : METHOD AND ARRANGEMENT FOR RECOVERING HEAT FROM BOTTOM ASH

(51) International classification :F23J1/02,F22B31/08,F23C10/24
(31) Priority Document No :20096376
(32) Priority Date :21/12/2009
(33) Name of priority country :Finland
(86) International Application No :PCT/FI2010/051021
Filing Date :14/12/2010
(87) International Publication No :WO 2011/076994 A1
(61) Patent of Addition to Application Number :NA
Filing Date :NA
(62) Divisional to Application Number :NA
Filing Date :NA

(71)**Name of Applicant :**
1)FOSTER WHEELER ENERGIA OY
Address of Applicant :Metsnneidonkuja 8 FI 02130 Espoo Finland
(72)**Name of Inventor :**
1)RUUSKANEN Marko

(57) Abstract :
The present invention relates to a method and an arrangement for recovering heat from bottom ash of a combustion process performed in a combustion device from which bottom ash is removed in high temperature. The present invention is specifically applicable to bubbling bed boilers fluidized bed boilers and circulating fluidized bed boilers. A characterizing feature of the present invention is that the heat recovered from the bottom ash to a specific cooling water circuit (42) is used elsewhere within the boiler arrangement.

No. of Pages : 24 No. of Claims : 22

(12) PATENT APPLICATION PUBLICATION
(19) INDIA
(22) Date of filing of Application :30/03/2009
(21) Application No.1765/CHENP/2009 A
(43) Publication Date : 21/03/2014

(54) Title of the invention : CHARACTER POSITION-BASED PASSWORD RECOVERY

(51) International classification :G06F15/16,G06F21/20
(31) Priority Document No :11/538,791
(32) Priority Date :04/10/2006
(33) Name of priority country :U.S.A.
(86) International Application No :PCT/US2007/080399
Filing Date :04/10/2007
(87) International Publication No :WO 2008/043009 A1
(61) Patent of Addition to Application Number :NA
Filing Date :NA
(62) Divisional to Application Number :NA
Filing Date :NA

(71)**Name of Applicant :**
1)MICROSOFT CORPORATION
Address of Applicant :ONE MICROSOFT WAY, REDMOND, WASHINGTON 98052-6399 U.S.A.
(72)**Name of Inventor :**
1)BECK, ROBERT, L
2)SULLIVAN, KEVIN

(57) Abstract :
A password recovery technique includes generating words by sequentially selecting a character for each character position of the word from a character string. The order of the characters in the character string is individually selected for each position of the word. Each sequentially generated word may be entered until the password is determined.

No. of Pages : 24 No. of Claims : 20

(12) PATENT APPLICATION PUBLICATION
(19) INDIA
(22) Date of filing of Application :09/07/2012
(21) Application No.6016/CHENP/2012 A
(43) Publication Date : 21/03/2014

(54) Title of the invention : ENVIRONMENTALLY FRIENDLY PROTECTIVE COATINGS FOR SUBSTRATES

(51) International classification :C09D5/38,C09D183/04,B05D3/02
(31) Priority Document No :09015364.4
(32) Priority Date :11/12/2009
(33) Name of priority country :EPO
(86) International Application No :PCT/EP2010/007521
Filing Date :10/12/2010
(87) International Publication No :WO 2011/069663 A2
(61) Patent of Addition to Application Number :NA
Filing Date :NA
(62) Divisional to Application Number :NA
Filing Date :NA

(71)**Name of Applicant :**
1)TATA STEEL UK LIMITED
Address of Applicant :30 Millbank London SW1 P 4WY U.K.
(72)**Name of Inventor :**
1)GORDON Douglas Jesus Figueroa
2)HARDING Tim
3)B–HM Sivasambu
4)LI Wu

(57) Abstract :
A coated cold rolled steel substrate comprising a water reducible coating composition which coating composition comprises water an organic solvent a silane as binder a coating additive and a metal wherein the metal is a metal particle or a metal alloy particle having an aluminium content greater than 50 weight % and a balance of less than 50 weight % of a non aluminium metal and wherein the coating has a wet film thickness in the range of 6 µm to 90 µm.

No. of Pages : 20 No. of Claims : 15

(12) PATENT APPLICATION PUBLICATION
(19) INDIA
(22) Date of filing of Application :12/07/2012
(21) Application No.6120/CHENP/2012 A
(43) Publication Date : 21/03/2014

(54) Title of the invention : METHOD FOR PRODUCING HOMOPOLYSACCHARIDES

(51) International classification :C12P19/04,C08B37/00,B01D61/14
(31) Priority Document No :09179716.7
(32) Priority Date :17/12/2009
(33) Name of priority country :EPO
(86) International Application No :PCT/EP2010/069518
Filing Date :13/12/2010
(87) International Publication No :WO 2011/082973
(61) Patent of Addition to Application Number :NA
Filing Date :NA
(62) Divisional to Application Number :NA
Filing Date :NA

(71)**Name of Applicant :**
1)WINTERSHALL HOLDING GMBH
Address of Applicant :Friedrich Ebert Str. 160 34119 Kassel Germany
(72)**Name of Inventor :**
1)THERRE Jrg
2)VO Hartwig
3)SCHMIDT Julia Kristiane
4)FAUST Tillmann
5)HOLLMANN Rajan

(57) Abstract :
Process for the preparation of aqueous solutions of glucans liaving a 3-1,3-glycosidically linked main chain and side groups having a (3-1,6-glycosidic bond thereto by fermentation of fungal strains, which secrete said glucans into the fermentation broth, in an aqueous culture medium, the separation of the glucans from the fermentation broth being effected with the use of asymmetrical filter membranes.

No. of Pages : 26 No. of Claims : 12

(12) PATENT APPLICATION PUBLICATION
(19) INDIA
(22) Date of filing of Application :16/07/2012
(21) Application No.6245/CHENP/2012 A
(43) Publication Date : 21/03/2014

(54) Title of the invention : PROCESS OF DIRECT COPPER EXCHANGE INTO NA+ FORM OF CHABAZITE MOLECULAR SIEVE AND CATALYSTS SYSTEMS AND METHODS

(51) International classification :B01J29/76,B01J37/30,B01J37/02
(31) Priority Document No :61/287704
(32) Priority Date :18/12/2009
(33) Name of priority country :U.S.A.
(86) International Application No :PCT/EP2010/070094
Filing Date :17/12/2010
(87) International Publication No :WO 2011/073398
(61) Patent of Addition to Application Number :NA
Filing Date :NA
(62) Divisional to Application Number :NA
Filing Date :NA

(71)**Name of Applicant :**
1)BASF CORPORATION
Address of Applicant :100 Park Avenue Florham Park NJ 07932 U.S.A.
(72)**Name of Inventor :**
1)BEUTEL Tilman
2)DIETERLE Martin
3)MLLER Ulrich
4)BULL Ivor
5)MOINI Ahmad
6)BREEN Michael
7)SLAWSKI Barbara
8)ALERASOOL Saeed
9)LIN Wenyong
10)LIU Xinsheng

(57) Abstract :
Disclosed are processes for the preparation of copper containing molecular sieves with the CHA structure wherein the copper is exchanged into the Na+ form of the Chabazite using a liquid copper solution wherein the concentration of copper is in the range of about 0.001 to about 0.4 molar. Also described are copper containing molecular sieves with the CHA structure catalysts incorporating molecular sieves systems and methods for their use.

No. of Pages : 40 No. of Claims : 16

(12) PATENT APPLICATION PUBLICATION
(19) INDIA
(22) Date of filing of Application :20/07/2012
(21) Application No.6400/CHENP/2012 A
(43) Publication Date : 21/03/2014

(54) Title of the invention : RADIO BASE STATION APPARATUSES MOBILE TERMINAL APPARATUSES AND WIRELESS COMMUNICATION METHOD

(51) International classification :H04J11/00,H04W72/04
(31) Priority Document No :2010000773
(32) Priority Date :05/01/2010
(33) Name of priority country :Japan
(86) International Application No :PCT/JP2011/050035
Filing Date :05/01/2011
(87) International Publication No :WO 2011/083794
(61) Patent of Addition to Application Number :NA
Filing Date :NA
(62) Divisional to Application Number :NA
Filing Date :NA

(71)**Name of Applicant :**
1)NTT DOCOMO INC.
Address of Applicant :11 1 Nagatacho 2 chome Chiyoda ku Tokyo 1006150 Japan
(72)**Name of Inventor :**
1)KISHIYAMA Yoshihisa
2)TAKEDA Kazuaki
3)OHWATARI Yusuke

(57) Abstract :
Provided are radio base station apparatuses mobile terminal apparatuses and a wireless communication method wherein downlink channel quality determination reference signals are transmitted and received in consideration of the orthogonalization among transmission antennas the orthogonalization among cells and of highly precise interference estimation. According to the wireless communication method the radio base station apparatuses generate channel quality determination reference signals non orthogonalize the channel quality determination reference signals such that the channel quality determination reference signals are not orthogonal to each other at least among some of the cells orthogonalize the channel quality determination reference signals among the transmission antennas and transmit the channel quality determination reference signals to the mobile terminal apparatuses together with control information and each of the mobile terminal apparatuses receives a downlink signal including the control information and channel quality determination reference signal uses the control information to extract the channel quality determination reference signal and uses the channel quality determination reference signal to determine the channel quality.

No. of Pages : 49 No. of Claims : 13

(12) PATENT APPLICATION PUBLICATION
(19) INDIA
(22) Date of filing of Application :10/08/2009
(21) Application No.1890/CHE/2009 A
(43) Publication Date : 21/03/2014

(54) Title of the invention : A IMPROVED LIGHT WEIGHT ARMOR SYSTEM

(51) International classification	:F41H 5/00
(31) Priority Document No	:NA
(32) Priority Date	:NA
(33) Name of priority country	:NA
(86) International Application No	:NA
Filing Date	:NA
(87) International Publication No	: NA
(61) Patent of Addition to Application Number	:NA
Filing Date	:NA
(62) Divisional to Application Number	:NA
Filing Date	:NA

(71)**Name of Applicant :**
1) KHAJA MOHD MOINUDDIN KHADER
Address of Applicant :10-1-128/1/1/A, MASAB TANK, HYDERABAD - 500 028. Andhra Pradesh India
(72)**Name of Inventor :**
1) KHAJA MOHD MOINUDDIN KHADER

(57) Abstract :
1. A improved light weight armor system according to claim 1, wherein in the earlier inventions the inventors have used solid rounds / pellets / balls or segments or rounds / pellets / balls or segments having part holes upto certain depth, not see through, the main purpose of having upto 70 % see though holes along the height of the said rounds / pellets / balls or segments, the said hole should be atleast 30 % smaller than the diameter of the bullet or the penetrating core (i.e for example for 12.7 mm Ammunition the maximum dia of hole should be 8.89 mm and not bigger) to reduce the weight of the panels considerably and also make the panels capable of stopping multi hit shots at very close distance (distance from shot to shot), and the same is a invention. 2. A improved light weight armor system according to claim 1, wherein in this invention the assembly is cured at temperature ranging from 50 C to 200 C or more depending upon the properties materials used in autoclave, oven etc. under vaccum / air / pressure which also is an invention, this makes the assembly more durable and also more efficient and safe. 3. A improved light weight armor system according to claim 1, wherein the said strips of Polyethylene fibres / material (UHMW-PE) with or without macro molecular orientation or other materials such as Kevlar, Meta / Para Aramid, Dyneema, Tworon, Nomex, Zylon etc. are made to pass through all holes (knitting) or few holes of rounds / pellets / balls or segments in single or both directions i.e x and y and also diagonal in order to have good retaining strength which also is claimed as invention, this makes the assembly more durable and also more efficient and safe for multi shot use close to each other (Short distance from shot to shot).

No. of Pages : 7 No. of Claims : 7

(12) PATENT APPLICATION PUBLICATION
(19) INDIA
(22) Date of filing of Application :14/05/2009
(21) Application No.2695/CHENP/2009 A
(43) Publication Date : 21/03/2014

(54) Title of the invention : ORAL DOSAGE FORM COMPRISING TRI-SUBSTITUTED GLYCEROL COMPOUNDS

(51) International classification :A61K9/28,A61K9/48
(31) Priority Document No :60/858,157
(32) Priority Date :10/11/2006
(33) Name of priority country :U.S.A.
(86) International Application No :PCT/EP2007/62180
Filing Date :09/11/2007
(87) International Publication No :(WO 2008/055996)
(61) Patent of Addition to Application Number :NA
Filing Date :NA
(62) Divisional to Application Number :NA
Filing Date :NA

(71)**Name of Applicant :**
1)ALPHAPTOSE GMBH
Address of Applicant :ALSTERCHAUSSEE 13, 20149 HAMBURG Germany
(72)**Name of Inventor :**
1)RICHTER, WOLFGANG
2)WEBER, LUTZ

(57) Abstract :
The present invention relates to pharmaceutical solid dosage forms for oral administration comprising a tri-substituted glycerol Compound or a pharmaceutically acceptable salt thereof. The invention also relates to a corresponding method for preparing such dosage forms as well as to their use as medicaments for the treatment of cancer and immune diseases.

No. of Pages : 51 No. of Claims : 15

(12) PATENT APPLICATION PUBLICATION
(19) INDIA
(22) Date of filing of Application :14/05/2009
(21) Application No.2696/CHENP/2009 A
(43) Publication Date : 21/03/2014

(54) Title of the invention : A MICROMECHANICAL STRUCTURE AND A METHOD OF FABRICATING A MICROMECHANICAL STRUCTURE

(51) International classification :B81C1/00,B81B7/00
(31) Priority Document No :60/858,076
(32) Priority Date :10/11/2006
(33) Name of priority country :U.S.A.
(86) International Application No :PCT/SG2007/000386
Filing Date :09/11/2007
(87) International Publication No :(WO 2008/057055)
(61) Patent of Addition to Application Number :NA
Filing Date :NA
(62) Divisional to Application Number :NA
Filing Date :NA

(71)**Name of Applicant :**
1)AGENCY FOR SCIENCE, TECHNOLOGY AND RESEARCH
Address of Applicant :20 BIOPOLIS WAY, #07-01 CENTROS, SINGAPORE 138668 Singapore
(72)**Name of Inventor :**
1)TRIPATHY, SUDHIRANJAN
2)SAHMUGANATHAN, VICKNESH

(57) Abstract :
A micromechanical structure and a method of fabricating a micromechanical structure are provided. The micromechanical structure comprises a silicon (Si) based substrate; a micromechanical element formed directly on the substrate; and an undercut formed underneath a released portion of the micromechanical element; wherein the undercut is in the form of a recess formed in the Si based substrate.

No. of Pages : 60 No. of Claims : 17

(12) PATENT APPLICATION PUBLICATION
(19) INDIA
(22) Date of filing of Application :20/07/2012
(21) Application No.6431/CHENP/2012 A
(43) Publication Date : 21/03/2014

(54) Title of the invention : A MULTI DIMENSIONAL IDENTIFIER

(51) International classification :A61J1/06,A61M5/24,G06K7/10
(31) Priority Document No :61/297,602
(32) Priority Date :22/01/2010
(33) Name of priority country :U.S.A.
(86) International Application No:PCT/EP2011/050794
Filing Date :21/01/2011
(87) International Publication No :WO 2011/089204 A3
(61) Patent of Addition to Application Number :NA
Filing Date :NA
(62) Divisional to Application Number :NA
Filing Date :NA

(71)**Name of Applicant :**
1)SANOFI AVENTIS DEUTSCHLAND GMBH
Address of Applicant :Br¼ningstrae 50 65929 Frankfurt Germany
(72)**Name of Inventor :**
1)LANGLEY Christopher Nigel
2)RUTTER Paul Benedict
3)AVERY Richard James Vincent

(57) Abstract :
An identifier (50) for a medicament reservoir (20) is provided wherein the identifier (50) comprises a malleable sheet (164) of material. The sheet (164) of material comprises a top surface (54 104) and a bottom surface (56 112). The bottom surface (56 112) may be used to apply the identifier (50) to a surface of the medicament reservoir (20). A first three dimensional feature (60) is attached to the sheet (164) of material. The three dimensional feature (60) may be representative of a medicament (26) contained in the reservoir (20) and may further comprise an alignment feature (224 228). In addition the three dimensional feature (60) may be coded for a particular drug delivery device (10). Such drug delivery devices (10) could comprise pen type drug delivery devices.

No. of Pages : 34 No. of Claims : 13

(12) PATENT APPLICATION PUBLICATION
(19) INDIA
(22) Date of filing of Application :17/04/2012
(21) Application No.1534/CHE/2012 A
(43) Publication Date : 21/03/2014

(54) Title of the invention : INFRARED TOUCH SCREEN DEVICE CAPABLE OF MULTI-TOUCH POINTS SENSING

(51) International classification	:G06F
(31) Priority Document No	:10-2011-0047676
(32) Priority Date	:20/05/2011
(33) Name of priority country	:Republic of Korea
(86) International Application No	:NA
Filing Date	:NA
(87) International Publication No	: NA
(61) Patent of Addition to Application Number	:NA
Filing Date	:NA
(62) Divisional to Application Number	:NA
Filing Date	:NA

(71)**Name of Applicant :**
1)AFO Co. Ltd
Address of Applicant :1198-7 Balan-Ro Seotan-Myun Pyeongtaek-Si Gyeonggi-do Republic of Korea
2)Dai-Kyu Choi
(72)**Name of Inventor :**
1)Dai-Kyu Choi

(57) Abstract :
The present invention relates to an infrared touch screen device, and more particularly, it relates to an infrared touch screen device capable of smoothly sensing the contact positions of a plurality of touch points and sensing multi-touch points when a plurality of touch points are produced. For this purpose, the infrared touch screen comprises a screen provided with a display panel on which image is projected and a reinforced glass plate formed on a front surface of the display panel and protects the display panel and to which the touch is made, an reinforced glass plate formed on a front surface of the screen to protect the screen and on which a touch is made, an optical scanner formed on one side of the screen and scanning the screen with the infrared, a light guide bar formed on a border of the reinforced glass plate and reflecting a part of the infrared which is projected from the optical scanner and passes through the reinforced glass plate, and guiding the rest non-reflected infrared incident inside the reinforced glass plate and transferring to one end thereof, a light receiving portion provided on a distal end of the light guide bar and receiving the infrared which is transferred through the light guide bar, and a position detector for detecting the touch position with a scanning angle of the optical scanner when the amount of the light received in the light receiving portion is a little wherein the infrared reflected from the light guide bar in incident to other light guide bars which are formed, corresponding to the light guide bar reflecting the infrared.

No. of Pages : 36 No. of Claims : 11

(12) PATENT APPLICATION PUBLICATION
(19) INDIA
(22) Date of filing of Application :14/09/2012
(21) Application No.3843/CHE/2012 A
(43) Publication Date : 21/03/2014

(54) Title of the invention : CRYSTALLINE FORMS OF MIRABEGRON AND PROCESS FOR THEIR PREPARATION

(51) International classification :C07D
(31) Priority Document No :NA
(32) Priority Date :NA
(33) Name of priority country :NA
(86) International Application No :NA
Filing Date :NA
(87) International Publication No : NA
(61) Patent of Addition to Application Number :NA
Filing Date :NA
(62) Divisional to Application Number :NA
Filing Date :NA

(71)**Name of Applicant :**
1)Dr. Reddy™s Laboratories Limited
Address of Applicant :8-2-337 Road No. 3 Banjara Hills Hyderabad 500 034 Andhra Pradesh India
(72)**Name of Inventor :**
1)Boini Ambaiah
2)Tirunagari Vijay Kumar
3)Vyala Sunitha
4)Cherukupally Praveen
5)Chennuru Ramanaiah
6)Enugula Srinivas
7)Peddy Vishweshwar

(57) Abstract :
Aspects of the present application relate to a crystalline form of Mirabegron monohydrochloride and a crystalline form of Mirabegron, and process for their preparation and use thereof in the pharmaceutical composition.

No. of Pages : 15 No. of Claims : 10

(12) PATENT APPLICATION PUBLICATION
(19) INDIA
(22) Date of filing of Application :17/09/2012
(21) Application No.3845/CHE/2012 A
(43) Publication Date : 21/03/2014

(54) Title of the invention : VARIABLE COOLING SYSTEM FOR A STRADDLE TYPE VEHICLE

(51) International classification	:F01P11/00	(71)**Name of Applicant :**
(31) Priority Document No	:NA	**1)TVS MOTOR COMPANY LIMITED**
(32) Priority Date	:NA	Address of Applicant :JAYALAKSHMI ESTATES NO.29
(33) Name of priority country	:NA	(OLD NO.8) HADDOWS ROAD, CHENNAI 600 006 Tamil
(86) International Application No	:NA	Nadu India
Filing Date	:NA	(72)**Name of Inventor :**
(87) International Publication No	: NA	**1)RAMADOSS SAMBATHKUMAR**
(61) Patent of Addition to Application Number	:NA	**2)CHITHAMBARAM SUBRAMONIAM**
Filing Date	:NA	
(62) Divisional to Application Number	:NA	
Filing Date	:NA	

(57) Abstract :
The present subject matter relates to a variable cooling system for controlling the inlet of air to cool an internal combustion engine based on an engine characteristic like engine temperature. It prevents the entry of foreign matter into the cooling cowl of the engine during parked condition and also allows faster warm up of the engine during cold start.

No. of Pages : 25 No. of Claims : 10

(12) PATENT APPLICATION PUBLICATION
(19) INDIA
(22) Date of filing of Application :24/11/2011
(21) Application No.4056/CHE/2011 A
(43) Publication Date : 21/03/2014

(54) Title of the invention : HYDRAULIC CONTROL APPARATUS AND METHOD FOR MANUFACTURING THE SAME

(51) International classification :B60T 8/00
(31) Priority Document No :2010/261921
(32) Priority Date :25/11/2010
(33) Name of priority country :Japan
(86) International Application No :NA
Filing Date :NA
(87) International Publication No : NA
(61) Patent of Addition to Application Number :NA
Filing Date :NA
(62) Divisional to Application Number :NA
Filing Date :NA

(71)**Name of Applicant :**
1)NISSIN KOGYO CO., LTD.
Address of Applicant :840, KOKUBU, UEDA-SHI, NAGANO Japan
(72)**Name of Inventor :**
1)KODAMA, TAKURO

(57) Abstract :
According to one embodiment, there is provided a hydraulic control apparatus, including: a base body; and a housing to be fixed to one surface of the base body, wherein the housing includes an opening facing the one surface of the base body, wherein the opening includes a flange portion formed on and projected outwardly from an opening edge portion, and wherein the flange portion includes a screw-formed housing fixing hole for fixing the housing to the base body using a fastening member and a reference hole for provisionally fixing the housing when assembling parts to the housing, the reference hole being formed by lightening the flange portion and arranged parallel to the housing fixing hole.

No. of Pages : 25 No. of Claims : 7

(12) PATENT APPLICATION PUBLICATION
(19) INDIA
(22) Date of filing of Application :30/07/2012
(21) Application No.6696/CHENP/2012 A
(43) Publication Date : 21/03/2014

(54) Title of the invention : FRONT END SYSTEM AND FRONT END PROCESSING METHOD

(51) International classification :H04L12/56
(31) Priority Document No :2010-017960
(32) Priority Date :29/01/2010
(33) Name of priority country :Japan
(86) International Application No :PCT/JP2011/051135
Filing Date :21/01/2011
(87) International Publication No :WO 2011/093228 A1
(61) Patent of Addition to Application Number :NA
Filing Date :NA
(62) Divisional to Application Number :NA
Filing Date :NA

(71)**Name of Applicant :**
1)NEC CORPORATION
Address of Applicant :7 1 Shiba 5 chome Minato ku Tokyo 1088001 Japan
(72)**Name of Inventor :**
1)NAKASHIMA Tsuyoshi

(57) Abstract :
In a front end system wherein a plurality of relay devices are present End to End performance can be improved and a flexible network can be constructed for each policy. Specifically in the proximity of a switch which defines an entry/exit port of an external network a Front End Processor (FEP) comprising a fire wall (FW) and a load balancer (LB) for recognizing a protocol of L7 (layer 7) level is provided to unify the L7 (layer 7) process.

No. of Pages : 74 No. of Claims : 16

(12) PATENT APPLICATION PUBLICATION
(19) INDIA
(22) Date of filing of Application :08/04/2009
(21) Application No.1934/CHENP/2009 A
(43) Publication Date : 21/03/2014

(54) Title of the invention : CONNECTING DEVICES TO A MEDIA SHARING SERVICE

(51) International classification :G06F15/16,G06F17/00
(31) Priority Document No :11/549,467
(32) Priority Date :13/10/2006
(33) Name of priority country :U.S.A.
(86) International Application No :PCT/US2007/079036
Filing Date :20/09/2007
(87) International Publication No :WO 2008/045666
(61) Patent of Addition to Application Number :NA
Filing Date :NA
(62) Divisional to Application Number :NA
Filing Date :NA

(71)**Name of Applicant :**
1)MICROSOFT CORPORATION
Address of Applicant :ONE MICROSOFT WAY, REDMOND, WASHINGTON 98052-6399 U.S.A.
(72)**Name of Inventor :**
1)JONES, DAVID
2)PLASTINA, DANIEL
3)HAVESON, RYAN ALEXANDER

(57) Abstract :
Sharing media content between entities. A Computing device detects and connects to another Computing device within a predefined proximity. Media content items and associated metadata are selected and exchanged between the connected Computing devices. A subsequent purchase opportunity is provided to the users to purchase the exchanged media content items.

No. of Pages : 35 No. of Claims : 20

(12) PATENT APPLICATION PUBLICATION
(19) INDIA
(22) Date of filing of Application :17/09/2012
(21) Application No.3847/CHE/2012 A
(43) Publication Date : 21/03/2014

(54) Title of the invention : AN IMPROVED PROCESS FOR THE PREPARATION OF METFORMIN HYDROCHLORIDE

(51) International classification :A61K31/00
(31) Priority Document No :NA
(32) Priority Date :NA
(33) Name of priority country :NA
(86) International Application No :NA
Filing Date :NA
(87) International Publication No : NA
(61) Patent of Addition to Application Number :NA
Filing Date :NA
(62) Divisional to Application Number :NA
Filing Date :NA

(71)**Name of Applicant :**
1)LAURUS LABS PRIVATE LTD
Address of Applicant :2ND FLOOR, SERENE CHAMBERS ROAD, #7, BANJARA HILLS, HYDERABAD - 500 034 Andhra Pradesh India
(72)**Name of Inventor :**
1)SATYANARAYANA CHAVA
2)SEETA RAMANJANEYULU GORANTLA
3)VENKATA SUNIL KUMAR INDUKURI
4)NARASIMHA RAO KETAVARAPU
5)VEERAIAH CHOWDARY GORANTLA

(57) Abstract :
The present invention relates to an improved process for the preparation of Metformin hydrochloride by removing solvent from a solution comprising metformin hydrochloride using agitated thin film dryer.

No. of Pages : 11 No. of Claims : 10

(12) PATENT APPLICATION PUBLICATION
(19) INDIA
(22) Date of filing of Application :17/09/2012
(21) Application No.3848/CHE/2012 A
(43) Publication Date : 21/03/2014

(54) Title of the invention : IMPROVED PROCESS FOR THE PREPARATION OF DULOXETINE HYDROCHLORIDE

(51) International classification :C07D333/00
(31) Priority Document No :NA
(32) Priority Date :NA
(33) Name of priority country :NA
(86) International Application No :NA
Filing Date :NA
(87) International Publication No : NA
(61) Patent of Addition to Application Number :NA
Filing Date :NA
(62) Divisional to Application Number :NA
Filing Date :NA

(71)**Name of Applicant :**
1)MYLAN LABORATORIES LTD
Address of Applicant :PLOT NO 564/A/22, ROAD NO 92, JUBILEE HILLS, HYDERABAD - 500 033 Andhra Pradesh India
(72)**Name of Inventor :**
1)ABBINENI, JYOTHIBASU
2)KONUDULA, BABURAO
3)KOLLA, NAVEEN KUMAR
4)GADUPUDI, SATISH BABU
5)KUSUMBA, VIJAYAGOPAL
6)MULAKULA, RAMAYYACHOWDARY
7)GORANTLA, ADISESHAGIRI RAO

(57) Abstract :
The present invention relates to an improved process for the preparation of duloxetine hydrochloride. Wherein, (S)-3-methylamino-1-(2-thienyl) propan-1-ol is reacted with 1-fluoronaphthaline in the presence of a base and optionally using phase transfer catalyst in a solvent system consisting of dimethylsulfoxideand ether to obtain reaction mixture, and it is converted into duloxetine hydrochloride.

No. of Pages : 9 No. of Claims : 5

(12) PATENT APPLICATION PUBLICATION
(19) INDIA
(22) Date of filing of Application :01/06/2012
(21) Application No.4812/CHENP/2012 A
(43) Publication Date : 21/03/2014

(54) Title of the invention : FETAL GENOMIC ANALYSIS FROM A MATERNAL BIOLOGICAL SAMPLE

(51) International classification :C12Q1/68
(31) Priority Document No :61/258,567
(32) Priority Date :05/11/2009
(33) Name of priority country :U.S.A.
(86) International Application No :PCT/US2010/055655
Filing Date :05/11/2010
(87) International Publication No :WO 2011/057094 A1
(61) Patent of Addition to Application Number :NA
Filing Date :NA
(62) Divisional to Application Number :NA
Filing Date :NA

(71)**Name of Applicant :**
1)THE CHINESE UNIVERSITY OF HONG KONG
Address of Applicant :TECHNOLOGY LICENSING OFFICE, ROOM 328, PI CH'IU BUILDING, SHATIN, NEW TERRITORIES, HONG KONG China
2)SEQUENOM, INC.
(72)**Name of Inventor :**
1)LO, YUK MING DENNIS
2)CHAN, KWAN, CHEE
3)CHIU, WAI KWUN ROSSA
4)CANTOR, CHARLES

(57) Abstract :
Systems, methods, and apparatus for determining at least a portion of fetal genome are provided. DNA fragments from a maternal sample (maternal and fetal DNA) can be analyzed to identify alleles at certain loci. The amounts of DNA fragments of the respective alleles at these loci can be analyzed together to determine relative amounts of the haplotypes for these loci and determine which haplotypes have been inherited from the parental genomes. Loci where the parents are a specific combination of homozygous and heterozygous can. be analyzed to determine regions of the fetal genome. Reference haplotypes common in the population can be used along with the analysis of the DNA fragments of the maternal sample to determine the maternal and paternal genomes. Determination of mutations, a fractional fetal DNA concentration in a maternal sample, and a proportion of coverage of a sequencing of the maternal sample can also be provided.

No. of Pages : 119 No. of Claims : 44

(12) PATENT APPLICATION PUBLICATION
(19) INDIA
(22) Date of filing of Application :06/06/2012
(21) Application No.4945/CHENP/2012 A
(43) Publication Date : 21/03/2014

(54) Title of the invention : OPTICAL POINTING DEVICE, AND ELECTRONIC APPARATUS PROVIDED WITH SAME

(51) International classification :G06F3/033
(31) Priority Document No :2010-109338
(32) Priority Date :11/05/2010
(33) Name of priority country :Japan
(86) International Application No :PCT/JP2011/054864
Filing Date :03/03/2011
(87) International Publication No :WO 2011/142163 A1
(61) Patent of Addition to Application Number :NA
Filing Date :NA
(62) Divisional to Application Number :NA
Filing Date :NA

(71)**Name of Applicant :**
1)SHARP KABUSHIKI KAISHA
Address of Applicant :22-22, NAGAIKE-CHO, ABENO-KU, OSAKA-SHI, OSAKA 545-8522 Japan
(72)**Name of Inventor :**
1)NORO, TETSUSHI
2)MIYAKE, TAKAHIRO
3)MIKI, RENZABUROU

(57) Abstract :
To produce an ultrathin and easily assembled optical pointing device by reducing the number of components, an optical pointing device (10) of the present invention includes: a light source (2) for emitting light to an object (1); a light guide (6) for propagating therethrough light scattered by the object (1), the light guide including an image forming section (4) for forming an image with use of the light scattered by the object (1); and an image capturing section (7) for capturing the image with the light that has been scattered by the object (1) and that has exited the light guide (6). The light guide (6) guides a light beam (L) from the object via no air through an optical path extending from (i) a position where the light beam (L) enters the light guide to (ii) a position where the light beam exits the light guide (6).

No. of Pages : 67 No. of Claims : 5

(12) PATENT APPLICATION PUBLICATION
(19) INDIA
(22) Date of filing of Application :08/08/2012
(21) Application No.6942/CHENP/2012 A
(43) Publication Date : 21/03/2014

(54) Title of the invention : ELEVATOR RAIL RETAINING DEVICE

(51) International classification :B66B7/02
(31) Priority Document No :2010033933
(32) Priority Date :18/02/2010
(33) Name of priority country :Japan
(86) International Application No :PCT/JP2010/062536
Filing Date :26/07/2010
(87) International Publication No :WO 2011/102008 A1
(61) Patent of Addition to Application Number :NA
Filing Date :NA
(62) Divisional to Application Number :NA
Filing Date :NA

(71)**Name of Applicant :**
1)MITSUBISHI ELECTRIC CORPORATION
Address of Applicant :7 3 Marunouchi 2 chome Chiyoda ku Tokyo 1008310 Japan
(72)**Name of Inventor :**
1)MIYAKAWA Ken
2)WATANABE Seiji
3)KOIZUMI Yoshihiko
4)KURAOKA Hisao

(57) Abstract :
In an elevator a guide rail is used to guide the ascent and descent of ascending/descending objects such as an elevator car or counterweight. Said guide rail is held against an elevator shaft wall by a rail retaining device. The disclosed rail retaining device has a bracket which is affixed to the elevator shaft wall and a retaining fixture which holds the guide rail in the bracket. The retaining fixture allows the guide rail to rotate with respect to the bracket due to horizontal loads. The rail retaining device is also provided with a moment generation member which generates a moment that works to correct flexure in the guide rail caused by horizontal loads.

No. of Pages : 91 No. of Claims : 14

(12) PATENT APPLICATION PUBLICATION
(19) INDIA
(22) Date of filing of Application :13/04/2012
(21) Application No.1492/CHE/2012 A
(43) Publication Date : 21/03/2014

(54) Title of the invention : METHOD OF HANDLING SOFT BUFFER FOR CARRIER AGGREGATION AND RELATED COMMUNICATION DEVICE

(51) International classification :H04L
(31) Priority Document No :61/480,843
(32) Priority Date :29/04/2011
(33) Name of priority country :U.S.A.
(86) International Application No :NA
Filing Date :NA
(87) International Publication No : NA
(61) Patent of Addition to Application Number :NA
Filing Date :NA
(62) Divisional to Application Number :NA
Filing Date :NA

(71)**Name of Applicant :**
1)ACER INCORPORATED
Address of Applicant :8F 88 Sec. 1 Hsin Tai Wu Rd. Xizhi Dist. New Taipei City Taiwan R.O.C.
(72)**Name of Inventor :**
1)Chia-Wen Hsieh
2)Chien-Min Lee

(57) Abstract :
A method of handling a soft buffer of a mobile device in a wireless communication system is disclosed. The mobile device is configured a plurality of component carriers called CCs hereinafter by a network of the wireless communication system. The plurality of CCs comprise a primary CC called PCC hereinafter and at least one secondary CC called SCC hereinafter. The method comprises determining a plurality of weightings corresponding to the plurality of CCs according to an indication; determining a plurality of sizes of a plurality of sub-blocks according to the plurality of weightings; and dividing the soft buffer into the plurality of sub-blocks according to the plurality of sizes of the plurality of sub-blocks to arrange a plurality of hybrid automatic repeat request called HARQ hereinafter processes of the plurality of CCs in the plurality of sub-blocks.

No. of Pages : 42 No. of Claims : 26

(12) PATENT APPLICATION PUBLICATION
(19) INDIA
(22) Date of filing of Application :09/05/2012
(21) Application No.4135/CHENP/2012 A
(43) Publication Date : 21/03/2014

(54) Title of the invention : A DEVICE FOR MEASURING ACTIVITY OF THE SPINAL CORD OF A VERTEBRATE

(51) International classification :A61B5/1459
(31) Priority Document No :09 05481
(32) Priority Date :13/11/2009
(33) Name of priority country :France
(86) International Application No :PCT/EP2010/006832
Filing Date :10/11/2010
(87) International Publication No :WO 2011/057765 A1
(61) Patent of Addition to Application Number :NA
Filing Date :NA
(62) Divisional to Application Number :NA
Filing Date :NA

(71)**Name of Applicant :**
1)UNIVERSITE PIERRE ET MARIE CURIE CURIE (PARIS 6)
Address of Applicant :TOUR CENTRALE-4 PLACE JUSSIEU, 75005 PARIS France
2)ECOLE POLYTECHNIQUE
3)UNIVERSITE DE MONTREAL
(72)**Name of Inventor :**
1)GOGUIN, ALEXANDRE
2)LESAGE, FREDERIC
3)ROSSIGNOL, SERGE
4)BENALI, HABIB

(57) Abstract :
The invention relates to a measurement device for measuring activity of the spinal cord of a vertebrate, the device being characterized in that it includes at least one main probe (1) shaped to be fastened to a spinous process (2) of a vertebra (3) and to hold in position on opposite sides of the vertebra at least one emitter (6) for emitting a wave capable of interacting with the spinal cord (7) and at least one associated receiver (8) for receiving the wave that has interacted with the spinal cord and for generating a signal representative of the activity of the spinal cord.

No. of Pages : 13 No. of Claims : 10

(12) PATENT APPLICATION PUBLICATION
(19) INDIA
(22) Date of filing of Application :03/07/2012
(21) Application No.5829/CHENP/2012 A
(43) Publication Date : 21/03/2014

(54) Title of the invention : METHOD AND SYSTEM FOR PUSHING INFORMATION

(51) International classification :H04L12/58,H04L29/08
(31) Priority Document No :200910239061.2
(32) Priority Date :28/12/2009
(33) Name of priority country :China
(86) International Application No :PCT/CN2010/073698
Filing Date :09/06/2010
(87) International Publication No :WO 2011/079577 A1
(61) Patent of Addition to Application Number :NA
Filing Date :NA
(62) Divisional to Application Number :NA
Filing Date :NA

(71)**Name of Applicant :**
1)TENCENT TECHNOLOGY (SHENZHEN) COMPANY LIMITED
Address of Applicant :ROOM 403, EAST BLOCK 2,SEG PARK, ZHENXING ROAD, FUTIAN DISTRICT, SHENZHEN CITY 518044, GUANGDONG PROVINCE China
(72)**Name of Inventor :**
1)CHENG Yu

(57) Abstract :
A method and system for pushing information are provided. The method includes: establishing at least one cluster structure according to a relation between network nodes in SNS, the network nodes being taken as cluster members; the cluster structure comprising at least two levels of cluster members, and the cluster member of the first level is a cluster-head; sending information to the cluster-head of each cluster structure; sending the information to the cluster members of the next level by each cluster member of each level, until the cluster members of the last level receives the information, by using the examples of the present invention, existing communication channels are fully utilized to solve the problem of limited communication bandwidth and the information transmission efficiency is improved.

No. of Pages : 37 No. of Claims : 28

(12) PATENT APPLICATION PUBLICATION
(19) INDIA
(22) Date of filing of Application :27/07/2012
(21) Application No.6650/CHENP/2012 A
(43) Publication Date : 21/03/2014

(54) Title of the invention : ANTI IGA1 ANTIBODY

(51) International classification :C12N15/09,A61K39/395,A61P13/12
(31) Priority Document No :2009-296706
(32) Priority Date :28/12/2009
(33) Name of priority country :Japan
(86) International Application No :PCT/JP2010/073737
Filing Date :28/12/2010
(87) International Publication No :WO 2011/081189 A1
(61) Patent of Addition to Application Number :NA
Filing Date :NA
(62) Divisional to Application Number :NA
Filing Date :NA

(71)**Name of Applicant :**
1)Kyowa Hakko Kirin Co. Ltd.
Address of Applicant :1 6 1 Ohtemachi Chiyoda ku Tokyo 1008185 Japan
(72)**Name of Inventor :**
1)KANEKO Etsuji
2)SASAKI Yuka
3)MORI Katsuhiro
4)KANDA Yutaka
5)SATOH Mitsuo

(57) Abstract :
Provided is a monoclonal antibody effective in diagnosing IgA nephropathy that specifically recognizes and bonds to the hinge region of a polypeptide coded for by the immunoglobulin A1 heavy chain gene which contains a serine/threonine linked sugar chain with no galactose bound thereto. Also provided are a fragment of said antibody a diagnostic agent using the provided antibody or antibody fragment and a therapeutic agent containing the provided antibody or antibody fragment as an active ingredient.

No. of Pages : 100 No. of Claims : 32

(12) PATENT APPLICATION PUBLICATION
(19) INDIA
(22) Date of filing of Application :09/08/2012
(21) Application No.6978/CHENP/2012 A
(43) Publication Date : 21/03/2014

(54) Title of the invention : SPOOL SPINDLE

(51) International classification :B65H54/54,B65H75/24
(31) Priority Document No :10 2010 004 562.4
(32) Priority Date :14/01/2010
(33) Name of priority country :Germany
(86) International Application No :PCT/EP2011/050419
Filing Date :13/01/2011
(87) International Publication No :WO 2011/086142 A1
(61) Patent of Addition to Application Number :NA
Filing Date :NA
(62) Divisional to Application Number :NA
Filing Date :NA

(71)**Name of Applicant :**
1)OERLIKON TEXTILE GMBH & CO. KG
Address of Applicant :Leverkuser Strasse 65 42897 Remscheid Germany
(72)**Name of Inventor :**
1)VOSS Rainald

(57) Abstract :
The invention relates to a spool spindle for a winding machine comprising an outer jacket bushing (1) for receiving at least one spool sleeve (24). In order to fix the spool sleeve a clamping device (16) is provided which is arranged concentrically beneath the jacket bushing on the circumference of a drivable hollow spindle (2). For this purpose the clamping device comprises a plurality of clamping bodies (18) which are guided in openings (19) of the jacket bushing and which can be moved radially by at least one axially displaceable ring piston (12) so as to tension or relax the spool sleeve (24) wherein the ring piston is arranged inside an annular space formed between the jacket bushing and the hollow spindle and is held in the tensioned position by a plurality of springs. In order to obtain the highest possible carrying capacity for a predefined outside diameter of the spool spindle according to the invention each of the springs comprises a plurality of flat windings (25) that are oriented in the circumferential direction of the ring piston. In this way the installation height of the clamping device can be minimized even when using a plurality of springs.

No. of Pages : 24 No. of Claims : 11

(12) PATENT APPLICATION PUBLICATION
(19) INDIA
(22) Date of filing of Application :16/07/2012
(21) Application No.6226/CHENP/2012 A
(43) Publication Date : 21/03/2014

(54) Title of the invention : SAMPLE TO ANSWER MICROFLUIDIC CARTRIDGE

(51) International classification :B01L3/00
(31) Priority Document No :61/299,534
(32) Priority Date :29/01/2010
(33) Name of priority country :U.S.A.
(86) International Application No :PCT/US2011/022973
Filing Date :28/01/2011
(87) International Publication No :WO 2011/094577 A2
(61) Patent of Addition to Application Number :NA
Filing Date :NA
(62) Divisional to Application Number :NA
Filing Date :NA

(71)**Name of Applicant :**
1)MICRONICS INC.
Address of Applicant :8463 154th Avenue Northeast Redmond Washington 98052 U.S.A.
(72)**Name of Inventor :**
1)BATTRELL C. Frederick
2)SPRAGUE Isaac
3)BRAGD Matthew Scott
4)CAPODANNO Jason

(57) Abstract :
A microfluidic cartridge and methods for performing a diagnostic molecular or biochemical assay thereon where all dried and/or liquid reagents necessary for the assay are contained in the cartridge and the assay requires only the addition of sample. Pneumohydraulic features chamber and diaphragm technologies are introduced for overcoming the problems of bubble interference and reagent washout during operation of a microfluidic cartridge. The cartridges are inserted into a host instrument for performance of an assay and the cartridge is supplied as a consumable.

No. of Pages : 78 No. of Claims : 28

(12) PATENT APPLICATION PUBLICATION
(19) INDIA
(22) Date of filing of Application :19/07/2012
(21) Application No.6375/CHENP/2012 A
(43) Publication Date : 21/03/2014

(54) Title of the invention : HIGH STRENGTH HOT DIP GALVANISED STEEL STRIP

(51) International classification :B32B15/01,C22C38/00,C22C38/02
(31) Priority Document No :09015781.9
(32) Priority Date :21/12/2009
(33) Name of priority country :EPO
(86) International Application No :PCT/EP2010/007819
Filing Date :21/12/2010
(87) International Publication No :WO 2011/076383 A1
(61) Patent of Addition to Application Number :NA
Filing Date :NA
(62) Divisional to Application Number :NA
Filing Date :NA

(71)**Name of Applicant :**
1)TATA STEEL IJMUIDEN B.V.
Address of Applicant :P.O. Box 10000 NL 1970 CA Ijmuiden Netherlands
(72)**Name of Inventor :**
1)ENNIS Bernard Leo
2)HANLON David Neal

(57) Abstract :
The invention relates to a high strength hot dip galvanised steel strip consisting in mass percent of the following elements: 0.10 0.18 % C 1.90 2.50 % Mn 0.30 0.50 % Si 0.50 0.70 % Al 0.10 0.50 % Cr 0.001 0.10 % P 0.01 0.05 % Nb max 0.004 % Ca max 0.05 % S max 0.007 % N and optionally at least one of the following elements: 0.005 0.50 % Ti 0.005 0.50 % V 0.005 0.50 % Mo 0.005 0.50 % Ni 0.005 0.50 % Cu max 0.005 % B the balance being Fe and inevitable impurities wherein 0.80 % < Al + Si < 1.05 % and Mn + Cr > 2.10 %. This steel offers improved formability at a high strength has a good weldability and surface quality together with a good producability and coatability.

No. of Pages : 17 No. of Claims : 10

(12) PATENT APPLICATION PUBLICATION
(19) INDIA
(22) Date of filing of Application :06/08/2012
(21) Application No.6867/CHENP/2012 A
(43) Publication Date : 21/03/2014

(54) Title of the invention : METHODS AND COMPOSITIONS FOR APPLYING MOXIFLOXACIN TO THE EAR

(51) International classification :A61K31/437,A61K47/36,A61K47/38
(31) Priority Document No :61/293019
(32) Priority Date :07/01/2010
(33) Name of priority country :U.S.A.
(86) International Application No :PCT/US2011/020531
Filing Date :07/01/2011
(87) International Publication No :WO 2011/085209
(61) Patent of Addition to Application Number :NA
Filing Date :NA
(62) Divisional to Application Number :NA
Filing Date :NA

(71)**Name of Applicant :**
1)REGENTS OF THE UNIVERSITY OF MINNESOTA
Address of Applicant :1000 Westgate Drive Suite 160 Saint Paul Minnesota 55114 8658 U.S.A.
2)NOVARTIS AG
(72)**Name of Inventor :**
1)SAWCHUK Ronald J.
2)CHEUNG Belinda W.Y.
3)WALL G. Michael

(57) Abstract :
Methods and materials useful for applying moxifloxacin to the ear are described. The methods involve delivering a composition that contains at least one viscogenic agent and moxifloxacin or a salt thereof to the epidermal surface of the tympanic membrane via the ear canal. The composition is delivered to the tympanic membrane in a flowable form and after delivery to the tympanic membrane becomes sufficiently viscous such that the moxifloxacin is localized against the tympanic membrane. Such compositions can be used to prophylactically and/or therapeutically treat middle and inner ear conditions including otitis media.

No. of Pages : 70 No. of Claims : 27

(12) PATENT APPLICATION PUBLICATION
(19) INDIA
(22) Date of filing of Application :06/08/2012
(21) Application No.6870/CHENP/2012 A
(43) Publication Date : 21/03/2014

(54) Title of the invention : SYSTEMS AND METHODS FOR INDEPENDENTLY MANAGING CLINICAL DOCUMENTS AND PATIENT MANIFESTS AT A DATACENTER.

(51) International classification :G06F19/00
(31) Priority Document No :12/705133
(32) Priority Date :12/02/2010
(33) Name of priority country :U.S.A.
(86) International Application No :PCT/EP2011/051602
Filing Date :03/02/2011
(87) International Publication No :WO 2011/098393
(61) Patent of Addition to Application Number :NA
Filing Date :NA
(62) Divisional to Application Number :NA
Filing Date :NA

(71)**Name of Applicant :**
1)AGFA HEALTHCARE
Address of Applicant :IP Department 3802 Septestraat 27 B 2640 Mortsel Belgium
(72)**Name of Inventor :**
1)HO Kinson Kin Sang
2)PFEIFLE Ronald Friedrich

(57) Abstract :
A system and method for managing clinical documents and patient manifests at a datacenter comprising providing a processor and a memory operatively coupled thereto receiving at least one update message at the processor the at least one update message comprising at least one of: at least one new clinical document to be added to the memory and instructions to delete at least one existing clinical document from the memory updating the memory in accordance with the update message determining whether to generate at least one new patient manifest based on predetermined criteria the at least one patient manifest being indicative of the update performed and generating the at least one patient manifest wherein when the processor determines that the at least one patient manifest should be generated.

No. of Pages : 47 No. of Claims : 20

(12) PATENT APPLICATION PUBLICATION
(19) INDIA
(22) Date of filing of Application :17/08/2012
(21) Application No.7199/CHENP/2012 A
(43) Publication Date : 21/03/2014

(54) Title of the invention : METHODS FOR CARBON BLACK PRODUCTION USING PREHEATED FEEDSTOCK AND APPARATUS FOR SAME

(51) International classification :C09C1/48,C01B31/04
(31) Priority Document No :61/306092
(32) Priority Date :19/02/2010
(33) Name of priority country :U.S.A.
(86) International Application No :PCT/US2011/024295
Filing Date :10/02/2011
(87) International Publication No :WO 2011/103015
(61) Patent of Addition to Application Number :NA
Filing Date :NA
(62) Divisional to Application Number :NA
Filing Date :NA

(71)**Name of Applicant :**
1)CABOT CORPORATION
Address of Applicant :Two Seaport Lane Suite 1300 Boston MA 02210 U.S.A.
(72)**Name of Inventor :**
1)NESTER Serguei
2)RUMPF Frederick H.
3)KUTSOVSKY Yakov E.
4)NATALIE Charles A.

(57) Abstract :
Methods for production of carbon black using high temperature feedstock at temperatures exceeding about 300° C with fouling control are provided. An apparatus for production of carbon black according to these methods also is provided.

No. of Pages : 96 No. of Claims : 79

(12) PATENT APPLICATION PUBLICATION
(19) INDIA
(22) Date of filing of Application :31/07/2012
(21) Application No.6727/CHENP/2012 A
(43) Publication Date : 21/03/2014

(54) Title of the invention : DEVICE FOR GUIDING VAPORIZED FUEL TO INTERNAL COMBUSTION ENGINE

(51) International classification :F02M25/08
(31) Priority Document No :NA
(32) Priority Date :NA
(33) Name of priority country :NA
(86) International Application No :PCT/JP2010/050059
Filing Date :06/01/2010
(87) International Publication No :WO 2011/083569 A1
(61) Patent of Addition to Application Number :NA
Filing Date :NA
(62) Divisional to Application Number :NA
Filing Date :NA

(71)**Name of Applicant :**
1)HONDA MOTOR CO. LTD.
Address of Applicant :1 1 Minami Aoyama 2 chome Minato ku Tokyo 1078556 Japan
(72)**Name of Inventor :**
1)HIRAYAMA Shuji
2)FUJIHARA Kazuo
3)TAKIGAWA Toshinao
4)IGARI Takeo
5)INAOKA Hiroshi

(57) Abstract :
A device for guiding vaporized fuel guiding the vaporized fuel (64) which is generated within a fuel tank (22) into engine oil (48) contained in the crankcase (49) of an internal combustion engine (20). A vaporized fuel conduit pipe (41) extends from the fuel tank. A vaporized fuel path (52) is connected to the vaporized fuel conduit pipe. The vaporized fuel path is provided to the crankcase and is configured so that the vaporized fuel is discharged into the engine oil at a position below a given lower limit level (89) of the engine oil and above the inlet of the suction path of the pump for the engine oil.

No. of Pages : 48 No. of Claims : 12

(12) PATENT APPLICATION PUBLICATION
(19) INDIA
(22) Date of filing of Application :31/07/2012
(21) Application No.6728/CHENP/2012 A
(43) Publication Date : 21/03/2014

(54) Title of the invention : ASSEMBLY FOR A DRUG DELIVERY DEVICE AND DRUG DELIVERY DEVICE

(51) International classification :A61M5/315
(31) Priority Document No :10152344.7
(32) Priority Date :02/02/2010
(33) Name of priority country :EPO
(86) International Application No :PCT/EP2011/051446
Filing Date :02/02/2011
(87) International Publication No :WO 2011/095503 A1
(61) Patent of Addition to Application Number :NA
Filing Date :NA
(62) Divisional to Application Number :NA
Filing Date :NA

(71)**Name of Applicant :**
1)SANOFI AVENTIS DEUTSCHLAND GMBH
Address of Applicant :Br¼ningstrasse 50 65929 Frankfurt Germany
(72)**Name of Inventor :**
1)RAAB Steffen

(57) Abstract :
An assembly for a drug delivery device (1) comprises a housing (11) at least one stop feature (36) and at least one blocking member (34). For setting a dose of a drug (5) the stop feature (36) is configured to be rotated in a dose setting direction with respect to the blocking member (34) and with respect to the housing (11). For delivering the set dose of the drug (5) the blocking member (34) is configured to be axially displaced with respect to the stop feature (36) away from an axial starting position and towards an axial interaction position. When the blocking member (34) is in the axial starting position the blocking member (34) is axially offset from the stop feature (36) and when the blocking member (34) is in the axial interaction position the blocking member (34) is configured to mechanically cooperate with the stop feature (36) such that rotation of the stop feature (36) in the dose setting direction with respect to the housing (11) is prevented.

No. of Pages : 40 No. of Claims : 15

(12) PATENT APPLICATION PUBLICATION
(19) INDIA
(22) Date of filing of Application :17/08/2012
(21) Application No.7202/CHENP/2012 A
(43) Publication Date : 21/03/2014

(54) Title of the invention : OPTICAL FILM POLARIZING PLATE AND LIQUID CRYSTAL DISPLAY DEVICE

(51) International classification :G02B5/30,G02F1/1335,G02F1/13363
(31) Priority Document No :2010035462
(32) Priority Date :19/02/2010
(33) Name of priority country :Japan
(86) International Application No :PCT/JP2011/053578
Filing Date :18/02/2011
(87) International Publication No :WO 2011/102492
(61) Patent of Addition to Application Number :NA
Filing Date :NA
(62) Divisional to Application Number :NA
Filing Date :NA

(71)**Name of Applicant :**
1)FUJIFILM Corporation
Address of Applicant :26 30 Nishiazabu 2 chome Minato ku Tokyo 1060031 Japan
(72)**Name of Inventor :**
1)YANAI Yujiro
2)SATA Hiroaki
3)NAKAYAMA Hajime
4)SASADA Yasuyuki

(57) Abstract :
Disclosed is an optical film with minimal dimensional change following changes in the temperature of the support of a patterned retardation film. The optical film is provided with a support that includes a polymer having a moisture absorptivity of at least 0.5% and an optically anisotropic layer that has a first retardation region and a second retardation region with mutually different birefringence wherein the aforementioned first retardation region and the aforementioned second retardation region are alternately patterned with each line.

No. of Pages : 54 No. of Claims : 12

(12) PATENT APPLICATION PUBLICATION
(19) INDIA
(22) Date of filing of Application :17/08/2012
(21) Application No.7205/CHENP/2012 A
(43) Publication Date : 21/03/2014

(54) Title of the invention : SEATBELT BUCKLE APPARATUS

(51) International classification :A44B11/25,B60R22/12
(31) Priority Document No :2010045056
(32) Priority Date :02/03/2010
(33) Name of priority country :Japan
(86) International Application No :PCT/JP2011/054560
Filing Date :01/03/2011
(87) International Publication No :WO 2011/108506
(61) Patent of Addition to Application Number :NA
Filing Date :NA
(62) Divisional to Application Number :NA
Filing Date :NA

(71)**Name of Applicant :**
1)Autoliv Development AB
Address of Applicant :SE 447 83 Vargarda Sweden
(72)**Name of Inventor :**
1)KATAOKA Goshu
2)OBATA Shinya
3)NAKAMURA Toru

(57) Abstract :
Disclosed is a seatbelt buckle apparatus that is capable of suppressing the height of the upward spring of a counterweight and facilitating reductions in size which is equipped with an outer case (110) into which a tongue plate is inserted a latch member (140) that latches onto the tongue plate a release button (180) that releases the latching of the latch member to the tongue plate and a counterweight (200) that provides resistance to the sliding of the release button and which is characterized in that the counterweight is provided with a first rotating shaft (202) that pivots the counterweight relative to the outer case and a second rotating shaft (204) that meshes with bearing grooves formed on the release button and is forced by the sliding of the release button to pivot the counterweight and in that the second rotating shaft has a section in which a portion of the outer surface thereof is absent that comes into contact with the bearing grooves on the release button when the release button is slid towards the interior of the outer case.

No. of Pages : 47 No. of Claims : 4

(12) PATENT APPLICATION PUBLICATION
(19) INDIA
(22) Date of filing of Application :16/07/2012
(21) Application No.6213/CHENP/2012 A
(43) Publication Date : 21/03/2014

(54) Title of the invention : MICROBIAL AIR SAMPLER

(51) International classification :G01N1/24
(31) Priority Document No :12/685,770
(32) Priority Date :12/01/2010
(33) Name of priority country :U.S.A.
(86) International Application No :PCT/US2011/020814
Filing Date :11/01/2011
(87) International Publication No :WO 2011/088033 A1
(61) Patent of Addition to Application Number :NA
Filing Date :NA
(62) Divisional to Application Number :NA
Filing Date :NA

(71)**Name of Applicant :**
1)VELTEK ASSOCIATES INC.
Address of Applicant :15 Lee Boulevard Malvern Pennsylvania 19460 U.S.A.
(72)**Name of Inventor :**
1)VELLUTATO JR. Arthur L.

(57) Abstract :
An air sampler device has a top plate and a bottom plate and receives a Petri dish between the top plate and the bottom plate. The top plate includes 283 substantially small holes. The bottom plate has a deepened center well formed in the top surface. Elongated slots are formed in the top surface which extend out from the well. The slots have distal ends which extend beyond the Petri dish. Air is drawn into the sampler by a vacuum tube through an air port which communicates with the center well. Air is pulled into the 283 holes in the top plate and strikes the capture material in the Petri dish. The air then travels up over the sides of the dish into the distal ends through the slots and into the center well where it exits out of the vacuum air port.

No. of Pages : 16 No. of Claims : 19

(12) PATENT APPLICATION PUBLICATION
(19) INDIA
(22) Date of filing of Application :16/07/2012
(21) Application No.6214/CHENP/2012 A
(43) Publication Date : 21/03/2014

(54) Title of the invention : IMPROVEMENTS IN LEAD ACID BATTERY CONSTRUCTION

(51) International classification :H01M4/20,H01M4/68
(31) Priority Document No :582397
(32) Priority Date :24/12/2009
(33) Name of priority country :New Zealand
(86) International Application No :PCT/NZ2010/000264
Filing Date :23/12/2010
(87) International Publication No :WO 2011/078707
(61) Patent of Addition to Application Number :NA
Filing Date :NA
(62) Divisional to Application Number :NA
Filing Date :NA

(71)**Name of Applicant :**
1)ARCACTIVE LIMITED
Address of Applicant :Level 2 Geography Building Arts Road University of Canterbury Christchurch New Zealand
(72)**Name of Inventor :**
1)ABRAHAMSON John

(57) Abstract :
A lead acid battery or cell comprises electrode(s) of with current collector(s) of a fibrous material with an average interfibre spacing of less than 50 microns. The current collector material may be a carbon fibre material which has been thermally treated by electric arc discharge. The fibrous current collector material may comprise an impregnated paste comprising a mixture of lead sulphate particles and dilute sulfuric acid.

No. of Pages : 35 No. of Claims : 100

(12) PATENT APPLICATION PUBLICATION
(19) INDIA
(22) Date of filing of Application :19/07/2012
(21) Application No.6361/CHENP/2012 A
(43) Publication Date : 21/03/2014

(54) Title of the invention : CONTROLLING AND STAGGERING OPERATIONS TO LIMIT CURRENT SPIKES

(51) International classification :G06F1/26,G06F1/32
(31) Priority Document No :61/294,060
(32) Priority Date :11/01/2010
(33) Name of priority country :U.S.A.
(86) International Application No :PCT/US2011/020801
Filing Date :11/01/2011
(87) International Publication No :WO 2011/085357 A2
(61) Patent of Addition to Application Number :NA
Filing Date :NA
(62) Divisional to Application Number :NA
Filing Date :NA

(71)**Name of Applicant :**
1)APPLE INC.
Address of Applicant :1 Infinite Loop Cupertino CA 95014 U.S.A.
(72)**Name of Inventor :**
1)WAKRAT Nir J.
2)POST Daniel J.
3)HERMAN Kenneth
4)KHMELNITSKY Vadim
5)SEROFF Nick
6)THIO Hsiao
7)BYOM Matthew

(57) Abstract :
Systems and methods are disclosed for managing the peak power consumption of a system such as a non volatile memory system (e.g. flash memory system). The system can include multiple subsystems and a controller for controlling the subsystems. Each subsystem may have a current profile that is peaky. Thus the controller may control the peak power of the system by for example limiting the number of subsystems that can perform power intensive operations at the same time or by aiding a subsystem in determining the peak power that the subsystem may consume at any given time.

No. of Pages : 32 No. of Claims : 21

(12) PATENT APPLICATION PUBLICATION
(19) INDIA
(22) Date of filing of Application :27/07/2012
(21) Application No.6641/CHENP/2012 A
(43) Publication Date : 21/03/2014

(54) Title of the invention : SULFONAMIDO DERIVATIVES OF 3 4 DIARYLPYRAZOLES AS PROTEIN KINASE INHIBITORS

(51) International classification :C07D401/04,A61K31/4439,A61P35/00
(31) Priority Document No :10151805.8
(32) Priority Date :27/01/2010
(33) Name of priority country :EPO
(86) International Application No :PCT/EP2011/050654
Filing Date :19/01/2011
(87) International Publication No :WO 2011/092088 A1
(61) Patent of Addition to Application Number :NA
Filing Date :NA
(62) Divisional to Application Number :NA
Filing Date :NA

(71)**Name of Applicant :**
1)NERVIANO MEDICAL SCIENCES S.r.l.
Address of Applicant :PO Box. 11 Viale Pasteur 10 I 20014 Nerviano (MI) Italy
(72)**Name of Inventor :**
1)PULICI Maurizio
2)MARCHIONNI Chiara
3)TRAQUANDI Gabriella

(57) Abstract :
Compounds which are sulfonamido 3 4 diarylpyrazole derivatives or pharmaceutically acceptable salts thereof their preparation process and pharmaceutical compositions comprising them are disclosed; these compounds are useful in the treatment of diseases caused by and/or associated with an altered protein kinase activity such as cancer viral infection prevention of AIDS development in HIV infected individuals cell proliferative disorders autoimmune and neurodegenerative disorders; also disclosed is their use as prodrugs.

No. of Pages : 43 No. of Claims : 24

(12) PATENT APPLICATION PUBLICATION
(19) INDIA
(22) Date of filing of Application :22/08/2012
(21) Application No.7293/CHENP/2012 A
(43) Publication Date : 21/03/2014

(54) Title of the invention : CROSSLINKED POLYMER CARBON SORBENT FOR REMOVAL OF HEAVY METALS TOXIC MATERIALS AND CARBON DIOXIDE

(51) International classification :B01D53/02
(31) Priority Document No :PCT/US2010/000501
(32) Priority Date :22/02/2010
(33) Name of priority country :U.S.A.
(86) International Application No :PCT/US2011/025583
Filing Date :21/02/2011
(87) International Publication No :WO 2011/103529
(61) Patent of Addition to Application Number :NA
Filing Date :NA
(62) Divisional to Application Number :NA
Filing Date :NA

(71)**Name of Applicant :**
1)CENTRAL MICHIGAN UNIVERSITY
Address of Applicant :Presidents Office Warriner Hall 106 Mt. Pleasant MI 48859 U.S.A.
(72)**Name of Inventor :**
1)MOHANTY Dillip
2)MATTY David J.

(57) Abstract :
A polymer carbon sorbent for removing carbon dioxide heavy metals and toxic materials from a flue gas from a combustion process such as coal fired power plants is described. The sorbent comprises a carbonaceous sorbent material and a cured amine containing polymer and sulfur. The polymer carbon sorbents are formed by curing a curable amine containing polymer in the presence of the carbonaceous sorbent material a sulfur crosslinker a cure accelerator and optionally a cure activator. A convenient carbonaceous sorbent material is an activated carbon and a convenient curable amine containing polymer is an allyl containing poly(ethyleneimine) having a number average molecular weight between about 1 500 and about 10 000. The polymer carbon sorbents may contain sulfur in excess of an amount needed to cure the curable amine containing polymer. Such polymer carbon sorbents are shown to capture more mercury in both elemental an ionic forms compared to activated carbon and adsorb carbon dioxide.

No. of Pages : 43 No. of Claims : 28

(12) PATENT APPLICATION PUBLICATION
(19) INDIA
(22) Date of filing of Application :02/12/2011
(21) Application No.4185/CHE/2011 A
(43) Publication Date : 21/03/2014

(54) Title of the invention : BLOO-SIGHT

(51) International classification :G02B
(31) Priority Document No :NA
(32) Priority Date :NA
(33) Name of priority country :NA
(86) International Application No :NA
Filing Date :NA
(87) International Publication No : NA
(61) Patent of Addition to Application Number :NA
Filing Date :NA
(62) Divisional to Application Number :NA
Filing Date :NA

(71)**Name of Applicant :**
1)SRINIVAS. M. D.
Address of Applicant :D-32-11 IIT CHENNAI-36 Tamil Nadu India
(72)**Name of Inventor :**
1)SRINIVAS. M. D.

(57) Abstract :
The Bloo-Sight - Audio guidance for visually challenged people consist of a mother unit comprising of atleast one wired/wireless computer terminal equipped with an number of wireless RF transmitter and receiver to receive signals from the bus/trains and a RF transmitter operating at a fixed frequency say xMHz to transfer the information to the challenged people.

No. of Pages : 12 No. of Claims : 6

(12) PATENT APPLICATION PUBLICATION
(19) INDIA
(22) Date of filing of Application :12/07/2012
(21) Application No.6126/CHENP/2012 A
(43) Publication Date : 21/03/2014

(54) Title of the invention : CLAMPING DEVICE AND CONCRETE FORMWORK SYSTEM HAVING AT LEAST ONE CLAMPING DEVICE

(51) International classification :E04G17/04
(31) Priority Document No :102009054857.2
(32) Priority Date :17/12/2009
(33) Name of priority country :Germany
(86) International Application No :PCT/EP2010/069610
Filing Date :14/12/2010
(87) International Publication No :WO 2011/082987 A1
(61) Patent of Addition to Application Number :NA
Filing Date :NA
(62) Divisional to Application Number :NA
Filing Date :NA

(71)**Name of Applicant :**
1)DOKA INDUSTRIE GMBH
Address of Applicant :Josef Umdasch Platz 1 A 3300 Amstetten Austria
(72)**Name of Inventor :**
1)SCHMIED Anton

(57) Abstract :
The invention relates to a clamping device (10) for clamping together at least two concrete formwork elements arranged next to each other, having at least one holder (12) for an anchor nut (14) into which an anchor rod having a thread can be screwed. The invention further relates to a concrete formwork system having at least one clamping device and at least two concrete formwork elements having at least one opening for guiding an anchor rod through, wherein said anchor rod is designed in a frame of the concrete framework element.

No. of Pages : 13 No. of Claims : 12

(12) PATENT APPLICATION PUBLICATION
(19) INDIA
(22) Date of filing of Application :12/07/2012
(21) Application No.6127/CHENP/2012 A
(43) Publication Date : 21/03/2014

(54) Title of the invention : METHOD AND APPARATUS FOR DRIVING A PILE INTO A SUBSTRATE

(51) International classification :E02D13/04
(31) Priority Document No :1000096.6
(32) Priority Date :05/01/2010
(33) Name of priority country :U.K.
(86) International Application No :PCT/GB2011/050004
Filing Date :04/01/2011
(87) International Publication No :WO 2011/083324
(61) Patent of Addition to Application Number :NA
Filing Date :NA
(62) Divisional to Application Number :NA
Filing Date :NA

(71)**Name of Applicant :**
1)IHC SEA STEEL LTD.
Address of Applicant :Unit 3 Hawthorn Farm Winterborne Stickland Blandford Forum Dorset DT11 0NB U.K.
(72)**Name of Inventor :**
1)MACK James Ewart Milligan
2)GUNTER David Howel

(57) Abstract :
A pile guide (10) for supporting a pile as it is driven into a substrate comprising: a base frame (12) having a planar substrate engaging surface (14) and a pile guide member (16) configured to guide a pile in a predetermined direction therethrough as it is driven into a substrate (18) the pile guide member (16) being mounted on the base frame (12) via a plurality of support members (20) extending therebetween; characterised in that at least one of the plurality of support members (20) has an adjustable length with length adjustment of the or each support member (20) enabling the predetermined direction to be varied relative to the planar substrate engaging surface (14) of the base frame (12).

No. of Pages : 16 No. of Claims : 5

(12) PATENT APPLICATION PUBLICATION
(19) INDIA
(22) Date of filing of Application :12/07/2012
(21) Application No.6130/CHENP/2012 A
(43) Publication Date : 21/03/2014

(54) Title of the invention : MULTI STAGE DISCHARGER FOR GRINDING MILLS

(51) International classification :B02C17/18
(31) Priority Document No :12/699769
(32) Priority Date :03/02/2010
(33) Name of priority country :U.S.A.
(86) International Application No :PCT/FI2011/050087
Filing Date :02/02/2011
(87) International Publication No :WO 2011/095692
(61) Patent of Addition to Application Number :NA
Filing Date :NA
(62) Divisional to Application Number :NA
Filing Date :NA

(71)**Name of Applicant :**
1)OUTOTEC OYJ
Address of Applicant :Riihitontuntie 7 FI 02200 Espoo Finland
(72)**Name of Inventor :**
1)LATCHIREDDI Sanjeeva

(57) Abstract :
A pulp lifter assembly for a rotary grinding mill includes an outer pulp lifter having walls defining a pulp lifter chamber and an outlet opening for radially inward discharge of slurry from the pulp lifter chamber and an inner discharger disposed radially inward of the outer pulp lifter and circumferentially offset from the outer pulp lifter. The inner discharger defines a passage for conveying slurry substantially radially inward. A transition discharger is disposed radially between the outer pulp lifter and the inner discharger. The transition discharger has a first wall bounding an interior space and a second wall dividing the interior space into first and second regions. The second wall includes a guide that bounds a channel connecting the outlet opening of the outer pulp lifter to the passage defined by the inner discharger.

No. of Pages : 16 No. of Claims : 4

(12) PATENT APPLICATION PUBLICATION
(19) INDIA
(22) Date of filing of Application :23/08/2012
(21) Application No.7305/CHENP/2012 A
(43) Publication Date : 21/03/2014

(54) Title of the invention : METHOD FOR OPERATING A BRAKE SYSTEM FOR A MOTOR VEHICLE AND BRAKE SYSTEM

(51) International classification :B60T8/48
(31) Priority Document No :10 2010 001 312.9
(32) Priority Date :28/01/2010
(33) Name of priority country :Germany
(86) International Application No :PCT/EP2011/051257
Filing Date :28/01/2011
(87) International Publication No :WO 2011/092308
(61) Patent of Addition to Application Number :NA
Filing Date :NA
(62) Divisional to Application Number :NA
Filing Date :NA

(71)**Name of Applicant :**
1)CONTINENTAL TEVES AG & CO. OHG
Address of Applicant :Guerickestrae 7 60488 Frankfurt Germany
(72)**Name of Inventor :**
1)ROSS Scott
2)SCHOENBOHM Alexander
3)MATHIS Florian

(57) Abstract :
The invention relates to a method wherein a brake system (1) for a motor vehicle is controlled which comprises at least one electric regenerative brake (4) and a pressure medium operated in particular hydraulic brake system comprising friction brakes (2) wherein the friction brakes (2) associated with the individual wheels are arranged in at least two brake circuits (I II) to which pressure medium can be supplied by a first brake pressure generating means (8) in particular a tandem main brake cylinder and wherein each brake circuit (I II) comprises at least one pressure accumulator (12 I 12 II) and at least two electronically actuatable hydraulic valves (14 16 18 20). During braking using the electric regenerative brake(s) (4) by suitable actuation of at least one hydraulic valve (16) at a point in time pressure medium is discharged only into precisely one predetermined pressure accumulator (12 I 12 II). The invention further relates to a corresponding brake system (1).

No. of Pages : 49 No. of Claims : 15

(12) PATENT APPLICATION PUBLICATION
(19) INDIA
(22) Date of filing of Application :05/07/2012
(21) Application No.5942/CHENP/2012 A
(43) Publication Date : 21/03/2014

(54) Title of the invention : A NEW METHOD FOR SECURE USER AND TRANSACTION AUTHENTICATION AND RISK MANAGEMENT

(51) International classification :G06F7/04
(31) Priority Document No :61/298,551
(32) Priority Date :27/01/2010
(33) Name of priority country :U.S.A.
(86) International Application No :PCT/US2011/022486
Filing Date :26/01/2011
(87) International Publication No :WO 2011/094245 A1
(61) Patent of Addition to Application Number :NA
Filing Date :NA
(62) Divisional to Application Number :NA
Filing Date :NA

(71)**Name of Applicant :**
1)AUTHENTIFY INC.
Address of Applicant :8745 W. Higgins Road Suite 240 Chicago IL 60631 U.S.A.
(72)**Name of Inventor :**
1)GANESAN Ravi

(57) Abstract :
To provide a user signature on a network transaction a security server receives transaction information representing a transaction between a network user and a network site such as a website directly from the network site. The security server calculates a one time password based on the received transaction information and a secret shared by the security server and the network site but not by the user. The security server transmits the calculated one time password for application as the user s signature on the transaction. The one time password is independently calculable by the network site based on the shared secret.

No. of Pages : 23 No. of Claims : 16

(12) PATENT APPLICATION PUBLICATION
(19) INDIA
(22) Date of filing of Application :08/08/2012
(21) Application No.6930/CHENP/2012 A
(43) Publication Date : 21/03/2014

(54) Title of the invention : HEAT STORAGE DEVICE AND AIR CONDITIONER PROVIDED WITH SAME

(51) International classification :F25B1/00,F24F5/00,F28D20/00
(31) Priority Document No :NA
(32) Priority Date :NA
(33) Name of priority country :NA
(86) International Application No :PCT/JP2010/000820
Filing Date :10/02/2010
(87) International Publication No :WO 2011/099060
(61) Patent of Addition to Application Number :NA
Filing Date :NA
(62) Divisional to Application Number :NA
Filing Date :NA

(71)**Name of Applicant :**
1)PANASONIC CORPORATION
Address of Applicant :1006 Oaza Kadoma Kadoma shi Osaka 5718501 Japan
(72)**Name of Inventor :**
1)SHIMIZU Akihiko
2)IMASAKA Toshiyuki
3)YAMAMOTO Noriaki
4)KURISUTANI Hiroharu
5)TOKURA Satoshi

(57) Abstract :
The disclosed heat storage device which is disposed so as to surround a compressor and which is for accumulating the heat generated by the compressor comprises: a heat storage tank (32) having a main body (46) containing heat storing material for accumulating the heat generated by the compressor; an adhering member (52) which is more flexible than the heat storage tank main body (46) is disposed in a position so as to face the compressor and is for adhering to the compressor; and a stored heat heat exchanger (34) which is contained in the heat storage tank main body (46).

No. of Pages : 31 No. of Claims : 8

(12) PATENT APPLICATION PUBLICATION
(19) INDIA
(22) Date of filing of Application :31/12/2008
(21) Application No.7254/CHENP/2008 A
(43) Publication Date : 21/03/2014

(54) Title of the invention : SYSTEM AND METHOD FOR GENERATING A DISPLAY OF TAGS

(51) International classification :G06F7/00
(31) Priority Document No :11/478,774
(32) Priority Date :30/06/2006
(33) Name of priority country :U.S.A.
(86) International Application No :PCT/US2007/072362
Filing Date :28/06/2007
(87) International Publication No :WO 2008/005796 A2
(61) Patent of Addition to Application Number :NA
Filing Date :NA
(62) Divisional to Application Number :NA
Filing Date :NA

(71)**Name of Applicant :**
1)AMAZON TECHNOLOGIES, INC
Address of Applicant :P.O. BOX 8102, RENO, NEVADA 89507 U.S.A.
(72)**Name of Inventor :**
1)SIEGEL, HILLARD, B

(57) Abstract :
A system for generating a display of a tag options to a user wishing to tag an item includes a computer-implemented database for storing information related to various tags. Upon receiving a request for tags for an item, the system evaluates each tag associated with the item, and selects tag options to be displayed to the user based on the evaluations of the tags. The group of selected tags is displayed to the user in an order based on the evaluations.

No. of Pages : 38 No. of Claims : 32

(12) PATENT APPLICATION PUBLICATION
(19) INDIA
(22) Date of filing of Application :21/08/2012
(21) Application No.7258/CHENP/2012 A
(43) Publication Date : 21/03/2014

(54) Title of the invention : COFFEE BEVERAGE SYSTEM COFFEE BREWING APPARATUS COFFEE BEAN PACKAGING CARTRIDGE AND METHOD FOR PREPARING A COFFEE BEVERAGE

(51) International classification :A47J31/42,A47J42/50,A47J31/40
(31) Priority Document No :PCT/NL2010/050077
(32) Priority Date :17/02/2010
(33) Name of priority country :Netherlands
(86) International Application No :PCT/NL2011/050109
Filing Date :17/02/2011
(87) International Publication No :WO 2011/102715
(61) Patent of Addition to Application Number :NA
Filing Date :NA
(62) Divisional to Application Number :NA
Filing Date :NA

(71)**Name of Applicant :**
1)KONINKLIJKE DOUWE EGBERTS B.V.
Address of Applicant :Vleutensevaart 35 NL 3532 AD Utrecht Netherlands
2)KONINKLIJKE PHILIPS ELECTRONICS N. V.
(72)**Name of Inventor :**
1)VAN OS Ivo
2)KNEPPERS Job Leonardus
3)VERSLUIJS Richard Patrick
4)MOORMAN Christiaan Johannes Maria
5)DE GRAAFF Gerbrand Kristiaan

(57) Abstract :
A coffee beverage system is described including a coffee bean packaging cartridge and a coffee brewing apparatus. The coffee beans packaging cartridge includes a container holding coffee beans and transportation means adapted for enabling transportation of the coffee beans towards an exit opening of the cartridge. The coffee apparatus comprises a grinder for grinding the coffee beans from the cartridge and a brewing device for brewing coffee on the basis of ground coffee obtained by means of the grinder. The system is further provided with a metering chamber for receiving coffee beans which are transported with the aid of the transportation means into the metering chamber. In use the metering chamber will hold a predetermined amount of coffee beans. The metering chamber comprises a bottom portion which forms a part of the grinder said bottom portion being arranged in the coffee apparatus for rotating around an axis extending in a vertical direction.

No. of Pages : 63 No. of Claims : 139

(12) PATENT APPLICATION PUBLICATION
(19) INDIA
(22) Date of filing of Application :28/08/2012
(21) Application No.7443/CHENP/2012 A
(43) Publication Date : 21/03/2014

(54) Title of the invention : METHOD FOR PRODUCING PROPYLENE OXIDE

(51) International classification :C07D301/06,B01J23/44,B01J29/89
(31) Priority Document No :2010021978
(32) Priority Date :03/02/2010
(33) Name of priority country :Japan
(86) International Application No :PCT/JP2011/052205
Filing Date :27/01/2011
(87) International Publication No :WO 2011/096459
(61) Patent of Addition to Application Number :NA
Filing Date :NA
(62) Divisional to Application Number :NA
Filing Date :NA

(71)**Name of Applicant :**
1)SUMITOMO CHEMICAL COMPANY LIMITED
Address of Applicant :27 1 Shinkawa 2 chome Chuo ku Tokyo 1048260 Japan
(72)**Name of Inventor :**
1)KAWABATA Tomonori
2)ABEKAWA Hiroaki

(57) Abstract :
It is intended to provide a production method for producing propylene oxide from propylene hydrogen and oxygen with improved reaction rate. The present invention provides a method for producing propylene oxide comprising a step of reacting propylene hydrogen and oxygen in the presence of a Pd supported catalyst a titanosilicate catalyst and a Pd free carbon material in a liquid phase.

No. of Pages : 41 No. of Claims : 9

(12) PATENT APPLICATION PUBLICATION
(19) INDIA
(22) Date of filing of Application :11/09/2012
(21) Application No.7824/CHENP/2012 A
(43) Publication Date : 21/03/2014

(54) Title of the invention : CRIMP CONTACT AND CONNECTION STRUCTURE FOR ELECTRICAL CABLE FOR CRIMP CONTACT

(51) International classification :H01R4/18,H01R4/58
(31) Priority Document No :2010066855
(32) Priority Date :23/03/2010
(33) Name of priority country :Japan
(86) International Application No :PCT/JP2011/056970
Filing Date :23/03/2011
(87) International Publication No :WO 2011/118624
(61) Patent of Addition to Application Number :NA
Filing Date :NA
(62) Divisional to Application Number :NA
Filing Date :NA

(71)**Name of Applicant :**
1)YAZAKI CORPORATION
Address of Applicant :4 28 Mita 1 chome Minato ku Tokyo 1088333 Japan
(72)**Name of Inventor :**
1)AOKI Hiroshi
2)OSHITA Osamu
3)KOBAYASHI Naoki

(57) Abstract :
Disclosed is a crimp contact which eliminates corrosion problems in the conductor of an electric cable by preventing moisture from penetrating as far as the conductor of the electric cable even if moisture is present on the electric cable connection unit. The electrical cable connection unit (12) of the crimp contact (10) comprises a lower surface panel (14) which continues from the base plate section of a forward section electrical connection part (11) and an upper surface panel (15) which extends beyond the end of the lower surface panel (14) and can be positioned thereabove by folding upwards and forwards at the junction therebetween. The upper surface panel (15) and lower surface panel (14) are formed in such a cross sectional shape that when placed and joined together an internal space is formed therein to house the end part of an electrical cable (W) and also such that when the interior is compressed and sealed by receiving crimping force from an upwards/downwards direction the end part of the electrical cable is crimped thereby. Further an electrical cable insertion aperture (17) is provided in the junction (16) between the lower surface panel (14) and the upper surface panel (15) to allow the end part of an electrical cable (W) to be inserted therebetween.

No. of Pages : 32 No. of Claims : 3

(12) PATENT APPLICATION PUBLICATION
(19) INDIA
(22) Date of filing of Application :11/09/2012
(21) Application No.7825/CHENP/2012 A
(43) Publication Date : 21/03/2014

(54) Title of the invention : ALUMINUM OR ALUMINUM ALLOY MATERIAL HAVING SURFACE TREATMENT COATING FILM AND SURFACE TREATMENT METHOD THEREFOR

(51) International classification	:C22C21/00,B32B15/082,C23C22/40
(31) Priority Document No	:2010029756
(32) Priority Date	:15/02/2010
(33) Name of priority country	:Japan
(86) International Application No	:PCT/JP2011/052572
Filing Date	:08/02/2011
(87) International Publication No	:WO 2011/099460
(61) Patent of Addition to Application Number	:NA
Filing Date	:NA
(62) Divisional to Application Number	:NA
Filing Date	:NA

(71)**Name of Applicant :**
1)NIHON PARKERIZING CO. LTD.
Address of Applicant :15 1 Nihonbashi 1 chome Chuo ku Tokyo 1030027 Japan
2)DENSO CORPORATION
(72)**Name of Inventor :**
1)BANNAI Hirokatsu
2)OKAMOTO Yoshiyuki
3)NAKAMURA Kenji
4)HIROSE Takayuki
5)KASEBE Osamu
6)NISHIYA Shin
7)KOBAYASHI Kengo

(57) Abstract :
Disclosed is an aluminum or aluminum alloy material which is obtained by providing the surface of an aluminum or aluminum alloy base with a surface treatment coating film that is capable of maintaining hydrophilicity high corrosion resistance antibacterial properties and deodorizing properties for a long period of time. Also disclosed is a surface treatment method for the aluminum or aluminum alloy material. Specifically an aluminum or aluminum alloy material which is capable of maintaining hydrophilicity high corrosion resistance antibacterial properties and deodorizing properties for a long period of time can be obtained by providing the surface of an aluminum or aluminum alloy base with a first protective layer and a second protective layer in this order said first protective layer being a chemical conversion coating film that contains vanadium and at least one metal selected from among titanium zirconium and hafnium and said second protective layer being an organic coating film that is formed from a composition that contains (1) a chitosan derivative and a solubilizer (2) a modified polyvinyl alcohol that is obtained by graft polymerizing a hydrophilic polymer to a side chain of a polyvinyl alcohol and (3) a water soluble crosslinking agent.

No. of Pages : 59 No. of Claims : 6

(12) PATENT APPLICATION PUBLICATION
(19) INDIA
(22) Date of filing of Application :11/09/2012
(21) Application No.7826/CHENP/2012 A
(43) Publication Date : 21/03/2014

(54) Title of the invention : GAME SYSTEM AND COMPUTER PROGRAM FOR SAME

(51) International classification :A63F13/00
(31) Priority Document No :2010058100
(32) Priority Date :15/03/2010
(33) Name of priority country :Japan
(86) International Application No :PCT/JP2011/055826
Filing Date :11/03/2011
(87) International Publication No :WO 2011/115017
(61) Patent of Addition to Application Number :NA
Filing Date :NA
(62) Divisional to Application Number :NA
Filing Date :NA

(71)**Name of Applicant :**
1)KONAMI DIGITAL ENTERTAINMENT CO. LTD.
Address of Applicant :9 7 2 Akasaka Minato ku Tokyo 1078324 Japan
(72)**Name of Inventor :**
1)YAMAMOTO Takao

(57) Abstract :
Comprises a monitor (3) that displays the game screen a touch panel (4) that receives operation from a player (P) and a sequence data memory means (22) that stores sequence data (23) which records the operation timing for the touch panel (4) within the game. Displays a game region (A) on the monitor (3) which shows an object (O) for directing operation of the touch panel (4) and a judgment line (L) reached by the object (O) moving at the operating timing designated in the sequence data and determines the direction of a new judgment line (L) that extends from the object (O) based on the operation of the touch panel (4) when the object (O) moves along a predetermined path and reaches the same operation position as judgment line (L).

No. of Pages : 55 No. of Claims : 12

(12) PATENT APPLICATION PUBLICATION
(19) INDIA
(22) Date of filing of Application :12/07/2012
(21) Application No.6132/CHENP/2012 A
(43) Publication Date : 21/03/2014

(54) Title of the invention : SEMICONDUCTOR STRUCTURE HAVING SILICON CMOS TRANSISTORS WITH COLUMN III V TRANSISTORS ON A COMMON SUBSTRATE

(51) International classification :H01L21/8258,H01L27/12,H01L29/04
(31) Priority Document No :12/695518
(32) Priority Date :28/01/2010
(33) Name of priority country :U.S.A.
(86) International Application No :PCT/US2011/022358
Filing Date :25/01/2011
(87) International Publication No :WO 2011/094190 A1
(61) Patent of Addition to Application Number :NA
Filing Date :NA
(62) Divisional to Application Number :NA
Filing Date :NA

(71)**Name of Applicant :**
1)RAYTHEON COMPANY
Address of Applicant :870 Winter Street Waltham MA 02451 1449 U.S.A.
(72)**Name of Inventor :**
1)HOKE William E.
2)LAROCHE Jeffrey R.

(57) Abstract :
A semiconductor structure having: a silicon substrate (12) having a crystallographic orientation; an insulating layer (18/22) disposed over the silicon substrate (12); a silicon layer (20) having a different crystallographic orientation than the crystallographic orientation of the substrate disposed over the insulating layer; and a column III V transistor device (34) having the same crystallographic orientation as the substrate disposed on the silicon substrate. In one embodiment the column III V transistor device is in contact with the substrate. In other embodiments the device is a GaN device or the crystallographic orientation of the substrate is <lll>and wherein the crystallographic orientation of the silicon layer is <100>. In one embodiment CMOS transistors are disposed in the silicon layer. In one embodiment the column III V transistor device is a column III N device. In one embodiment a column III As III P or III Sb device is disposed on the top of the <100> silicon layer.

No. of Pages : 10 No. of Claims : 20

(12) PATENT APPLICATION PUBLICATION
(19) INDIA
(22) Date of filing of Application :16/07/2012
(21) Application No.6251/CHENP/2012 A
(43) Publication Date : 21/03/2014

(54) Title of the invention : PROCESS FOR PREPARING SUBSTITUTED 1 O ACYL 2 DEOXY 2 FLUORO 4 THIO D ARABINOFURANOSES

(51) International classification :C07D317/18,C07D333/32,C07D333/78
(31) Priority Document No :09075563.8
(32) Priority Date :18/12/2009
(33) Name of priority country :EPO
(86) International Application No :PCT/JP2010/072182
Filing Date :03/12/2010
(87) International Publication No :WO 2011/074484
(61) Patent of Addition to Application Number :NA
Filing Date :NA
(62) Divisional to Application Number :NA
Filing Date :NA

(71)**Name of Applicant :**
1)LibraMedicina Inc.
Address of Applicant :611 Tokyo Life Science Incubation Center 1 7 8 Kaigan Minato ku Tokyo 1050022 Japan
(72)**Name of Inventor :**
1)VOIGTLANDER David
2)SANDER Michael
3)HARRE Michael

(57) Abstract :
The present invention relates to a process for preparing 1 O acyl 2 deoxy 2 fluoro 4 thio Æ' D arabinofuranoses having formula I and intermediates thereof: wherein R1 represents C(O) C1 C6 alkyl or C(O) aryl; and R2 represents C1 C6 alkyl C1 C4 perfluoroalkyl or aryl.

No. of Pages : 38 No. of Claims : 27

(12) PATENT APPLICATION PUBLICATION
(19) INDIA
(22) Date of filing of Application :11/09/2012
(21) Application No.7830/CHENP/2012 A
(43) Publication Date : 21/03/2014

(54) Title of the invention : CONNECTION STRUCTURE OF CRIMPING TERMINAL TO ELECTRIC WIRE

(51) International classification :H01R4/18,H01R4/22
(31) Priority Document No :2010065085
(32) Priority Date :19/03/2010
(33) Name of priority country :Japan
(86) International Application No :PCT/JP2011/055420
Filing Date :08/03/2011
(87) International Publication No :WO 2011/114950
(61) Patent of Addition to Application Number :NA
Filing Date :NA
(62) Divisional to Application Number :NA
Filing Date :NA

(71)**Name of Applicant :**
1)YAZAKI CORPORATION
Address of Applicant :4 28 Mita 1 chome Minato ku Tokyo 1088333 Japan
(72)**Name of Inventor :**
1)SATO Kei

(57) Abstract :
In a conventional connection structure between a terminal and an electric wire a space between a cap and a conductor of an electric wire is filled with a filler so that water is prevented from entering the inside of the cap. However when the connection structure is in use there are many control points for the connection structure because the filler is used and thus the connection structure is not practical. Provided is a connection structure wherein water is prevented from entering the inside of a cap without using a filler. A cap (30) has serrations (38) on the inner periphery thereof. A conductor (Wa) and an insulation coating (Wb) of an electric wire (W) are engaged in the serrations (38). Thus a contact force or a coupling force between the insulation coating (Wb) of the electric wire (W) and the cap (30) is increased and the engagement portion blocks the entry of water. Thus a sufficient waterproof property can be maintained without using a filler and the control points for the filler is not necessary. Thus the usefulness of the connection structure is improved and the connection structure can be easily used.

No. of Pages : 19 No. of Claims : 3

(12) PATENT APPLICATION PUBLICATION
(19) INDIA
(22) Date of filing of Application :11/09/2012
(21) Application No.7832/CHENP/2012 A
(43) Publication Date : 21/03/2014

(54) Title of the invention : GAME SYSTEM COMPUTER PROGRAM FOR SAME AND GAME SYSTEM CONTROL METHOD

(51) International classification :A63F13/00
(31) Priority Document No :2010057506
(32) Priority Date :15/03/2010
(33) Name of priority country :Japan
(86) International Application No :PCT/JP2011/055825
Filing Date :11/03/2011
(87) International Publication No :WO 2011/115016
(61) Patent of Addition to Application Number :NA
Filing Date :NA
(62) Divisional to Application Number :NA
Filing Date :NA

(71)**Name of Applicant :**
1)KONAMI DIGITAL ENTERTAINMENT CO. LTD.
Address of Applicant :9 7 2 Akasaka Minato ku Tokyo 1078324 Japan
(72)**Name of Inventor :**
1)YAMAMOTO Takao

(57) Abstract :
Comprises a monitor (3) a touch panel (4) and a sequence data memory means (22) that stores sequence data (23) which records the operation timing of the touch panel (4) within the game and the corresponding appearance timing of an object (o) in the game region (A) which prompts operation at said operation timing. An appearance position decision operation that determines the appearance position (p) of the object (o) corresponding to the appearance timing and within an appearance region (a) which occupies part of the game region (A) displayed on the monitor (3) is received from the touch panel (4) the object (o) is controlled such that said object is generated at appearance position (p) a path (W) on which the object (o) travels to reach a judgment line (Li) is controlled such that said path (W) changes and the position on the judgment line (Li) that the object (o) reaches is altered according to the changes to the path (W).

No. of Pages : 53 No. of Claims : 13

(12) PATENT APPLICATION PUBLICATION
(19) INDIA
(22) Date of filing of Application :05/07/2012
(21) Application No.5916/CHENP/2012 A
(43) Publication Date : 21/03/2014

(54) Title of the invention : TELECOMMUNICATION MESSAGING THROUGH A SOCIAL NETWORKING SERVICE

(51) International classification :H04L12/58
(31) Priority Document No :12/684,234
(32) Priority Date :08/01/2010
(33) Name of priority country :U.S.A.
(86) International Application No :PCT/US2011/020020
Filing Date :03/01/2011
(87) International Publication No :WO 2011/084909 A2
(61) Patent of Addition to Application Number :NA
Filing Date :NA
(62) Divisional to Application Number :NA
Filing Date :NA

(71)**Name of Applicant :**
1)ALCATEL LUCENT
Address of Applicant :3 avenue Octave Grard F 75007 Paris France
(72)**Name of Inventor :**
1)CAI Yigang
2)HUA Suzann

(57) Abstract :
Systems and methods are disclosed for displaying telecommunication messages through a social networking service. One embodiment includes a telecommunication messaging system (116) that is implemented with a social networking service. The telecom messaging system (116) receives telecommunication messages from a telecommunication network (130) that are associated with a directory number assigned to a phone (124 126). The phone (124 126) is operated by a member (120) of a web based social networking service. The telecom messaging system (116) provides a telecommunication messaging page (400) to display the telecommunication messages to the member (120) as part of a website (114) for the social networking service. Thus the member (120) is able to view telecom messages such as voicemail messages text messages call logs etc. through the social networking service.

No. of Pages : 33 No. of Claims : 10

(12) PATENT APPLICATION PUBLICATION
(19) INDIA
(22) Date of filing of Application :05/07/2012
(21) Application No.5919/CHENP/2012 A
(43) Publication Date : 21/03/2014

(54) Title of the invention : CLIP CONNECTION

(51) International classification :E04B9/12
(31) Priority Document No :12/644, 037
(32) Priority Date :22/12/2009
(33) Name of priority country :U.S.A.
(86) International Application No :PCT/US2010/061231
Filing Date :20/12/2010
(87) International Publication No :WO 2011/087747
(61) Patent of Addition to Application Number :NA
Filing Date :NA
(62) Divisional to Application Number :NA
Filing Date :NA

(71)**Name of Applicant :**
1)USG INTERIORS LLC
Address of Applicant :550 West Adams St. Chicago Illinois 60661 U.S.A.
(72)**Name of Inventor :**
1)LEHANE James J. Jr.

(57) Abstract :
Producing grid tees with a range of service duty reflected in the use of various gauge sheet stock that exhibit an effective uniform thickness at their cross tee slots by locally altering a grid tee in the area of its cross tee receiving slot or slots so that the grid tee has a uniform effective thickness at these area(s) that can be standardized across a manufacturer s range of tee load ratings. Preferably a grid tee is permanently stamped with an indentation or dimple adjacent the cross tee slot and a cross tee connector has a lead edge area arranged to seat against the bottom of the indentation.

No. of Pages : 12 No. of Claims : 11

(12) PATENT APPLICATION PUBLICATION
(19) INDIA
(22) Date of filing of Application :31/07/2012
(21) Application No.6731/CHENP/2012 A
(43) Publication Date : 21/03/2014

(54) Title of the invention : ENCAPSULATED CHLORINE DIOXIDE GENERATOR

(51) International classification :C01B11/02
(31) Priority Document No :61/300,724
(32) Priority Date :02/02/2010
(33) Name of priority country :U.S.A.
(86) International Application No :PCT/US2011/023334
Filing Date :01/02/2011
(87) International Publication No :WO 2011/097224 A1
(61) Patent of Addition to Application Number :NA
Filing Date :NA
(62) Divisional to Application Number :NA
Filing Date :NA

(71)**Name of Applicant :**
1)BASF SE
Address of Applicant :Carl Bosch Strasse 38 Rheinland Pfalz 67056 Ludwigshafen Germany
(72)**Name of Inventor :**
1)ANDREWS Kim
2)ALI Shaukat
3)JEFFERIS Jesse
4)DAILEY James S.
5)ONYIUKE Charles O.
6)HIRSCH Keith A.

(57) Abstract :
An encapsulated chlorine dioxide generator is provided. The encapsulated generator includes a core particle that includes a metal chlorite and a solid acid. The encapsulated generator also includes a protective layer that is disposed about at least a portion of the core particle. The protective layer includes a copolymer of polyvinyl alcohol and a polyalkylene glycol. The encapsulated generator is formed in a method including the steps of forming the core particle and disposing the protective layer about the core particle. The encapsulated generator is also used in a method of cleaning an environment. The method of cleaning the environment includes the steps of providing the encapsulated generator and forming chlorine dioxide from the encapsulated chlorine dioxide generator to clean the environment.

No. of Pages : 57 No. of Claims : 18

(12) PATENT APPLICATION PUBLICATION
(19) INDIA
(22) Date of filing of Application :26/09/2012
(21) Application No.8254/CHENP/2012 A
(43) Publication Date : 21/03/2014

(54) Title of the invention : ACTUATING SYSTEMS FOR CONTROLLING THE FLIGHT OF A POWER WING PROFILE FOR CONVERSION OF WIND ENERGY INTO ELECTRICAL OR MECHANICAL ENERGY

(51) International classification :F03D5/00,F03D5/06,F03D7/00
(31) Priority Document No :TO2010A000258
(32) Priority Date :31/03/2010
(33) Name of priority country :Italy
(86) International Application No :PCT/IB2011/051364
Filing Date :30/03/2011
(87) International Publication No :WO 2011/121557
(61) Patent of Addition to Application Number :NA
Filing Date :NA
(62) Divisional to Application Number :NA
Filing Date :NA

(71)**Name of Applicant :**
1)KITENERGY S.R.L.
Address of Applicant :Via Livorno 60 I 10144 Torino Italy
(72)**Name of Inventor :**
1)MILANESE Mario
2)FAGIANO Lorenzo
3)GERLERO Ilario

(57) Abstract :
Actuating system for controlling the flight of a power wing profile or kite controlled via at least two cables (8) for conversion of wind energy into electrical or mechanical energy comprising a first unit (11 12) for exerting an action of unwinding winding of said cables to the same extent and a second unit (2a 2b 4a 4b) set between the power kite (7) and the first unit (11 12) for providing an action of differential control of the cables (8). The system employs a single motor (3) or motor/generator (15).

No. of Pages : 24 No. of Claims : 19

(12) PATENT APPLICATION PUBLICATION
(19) INDIA
(22) Date of filing of Application :26/09/2012
(21) Application No.8257/CHENP/2012 A
(43) Publication Date : 21/03/2014

(54) Title of the invention : ESTER COMPOUND AND USE THEREOF

(51) International classification :C07D249/12,A01N53/04
(31) Priority Document No :2010081657
(32) Priority Date :31/03/2010
(33) Name of priority country :Japan
(86) International Application No :PCT/JP2011/057492
Filing Date :18/03/2011
(87) International Publication No :WO 2011/122505
(61) Patent of Addition to Application Number :NA
Filing Date :NA
(62) Divisional to Application Number :NA
Filing Date :NA

(71)**Name of Applicant :**
1)SUMITOMO CHEMICAL COMPANY LIMITED
Address of Applicant :27 1 Shinkawa 2 chome Chuo ku Tokyo 1048260 Japan
(72)**Name of Inventor :**
1)MATSUO Noritada

(57) Abstract :
An ester compound represented by formula (1): wherein R represents hydrogen or methyl R represents hydrogen or C1 C4 alkyl and R represents hydrogen or C1 C4 alkyl; has an excellent pest control effect and is therefore useful as an active ingredient of a pest control agent.

No. of Pages : 76 No. of Claims : 30

(12) PATENT APPLICATION PUBLICATION
(19) INDIA
(22) Date of filing of Application :29/08/2012
(21) Application No.7470/CHENP/2012 A
(43) Publication Date : 21/03/2014

(54) Title of the invention : METHOD FOR MANUFACTURING ALOE POWDER

(51) International classification :A23L1/212
(31) Priority Document No :2010022227
(32) Priority Date :03/02/2010
(33) Name of priority country :Japan
(86) International Application No :PCT/JP2010/070129
Filing Date :11/11/2010
(87) International Publication No :WO 2011/096122
(61) Patent of Addition to Application Number :NA
Filing Date :NA
(62) Divisional to Application Number :NA
Filing Date :NA

(71)**Name of Applicant :**
1)MORINAGA MILK INDUSTRY CO. LTD.
Address of Applicant :33 1 Shiba 5 chome Minato ku Tokyo 1088384 Japan
(72)**Name of Inventor :**
1)ASANO Yuzo
2)NOMAGUCHI Kouji
3)YAMADA Muneo
4)TANAKA Miyuki

(57) Abstract :
Provided is a technique by which a dried aloe mesophyll is pulverized efficiently by means of a pneumatic pulverizer wherein: 1) the dried aloe mesophyll is processed using a supercritical extraction method extracts from the dried aloe mesophyll are eliminated and a residue is obtained and then 2) said residue is pulverized by means of the pneumatic pulverizer to form aloe powder.

No. of Pages : 50 No. of Claims : 9

(12) PATENT APPLICATION PUBLICATION
(19) INDIA
(22) Date of filing of Application :29/08/2012
(21) Application No.7471/CHENP/2012 A
(43) Publication Date : 21/03/2014

(54) Title of the invention : GROUP III NITRIDE BASED LIGHT EMITTING DIODE STRUCTURES WITH MULTIPLE QUANTUM WELL STRUCTURES HAVING VARYING WELL THICKNESSES

(51) International classification :H01L33/00
(31) Priority Document No :12/699541
(32) Priority Date :03/02/2010
(33) Name of priority country :U.S.A.
(86) International Application No :PCT/US2011/023114
Filing Date :31/01/2011
(87) International Publication No :WO 2011/097150
(61) Patent of Addition to Application Number :NA
Filing Date :NA
(62) Divisional to Application Number :NA
Filing Date :NA

(71)**Name of Applicant :**
1)CREE INC.
Address of Applicant :4600 Silicon Drive Durham North Carolina 27703 U.S.A.
(72)**Name of Inventor :**
1)BERGMANN Michael John
2)DRISCOLL Daniel Carleton
3)CHAVAN Ashonita
4)CANTU ALEJANDRO Pablo
5)IBBETSON James

(57) Abstract :
A Group III nitride based light emitting diode includes a p type Group III nitride based semiconductor layer an n type Group III nitride based semiconductor layer that forms a P N junction with the p type Group III nitride based semiconductor layer and a Group III nitride based active region on the n type Group III nitride based semiconductor layer. The active region includes a plurality of sequentially stacked Group III nitride based wells including respective well layers. The plurality of well layers includes a first well layer having a first thickness and a second well layer having a second thickness. The second well layer is between the P N junction and the first well layer and the second thickness is greater than the first thickness.

No. of Pages : 51 No. of Claims : 36

(12) PATENT APPLICATION PUBLICATION
(19) INDIA
(22) Date of filing of Application :26/09/2012
(21) Application No.8260/CHENP/2012 A
(43) Publication Date : 21/03/2014

(54) Title of the invention : MOUNTING DEVICE FOR A ROTATABLE CENTER PART IN AN INJECTION MOLDING DEVICE

(51) International classification :B29C45/16,B29C45/04
(31) Priority Document No :00270/10
(32) Priority Date :02/03/2010
(33) Name of priority country :Switzerland
(86) International Application No :PCT/EP2011/052754
Filing Date :24/02/2011
(87) International Publication No :WO 2011/107395
(61) Patent of Addition to Application Number :NA
Filing Date :NA
(62) Divisional to Application Number :NA
Filing Date :NA

(71)**Name of Applicant :**
1)FOBOHA GMBH FORMENBAU
Address of Applicant :Im M¼hlegr¼n 8 77716 Haslach Germany
(72)**Name of Inventor :**
1)ARMBRUSTER Rainer

(57) Abstract :
The invention relates to a mounting device (1) for a center part (4) rotatable about a rotary axis (6) in an injection molding device. The mounting device comprises at least one lower mounting device (2) having a modularly constructed lower cross member (7). The cross member (7) comprises a center block (9) and at least one side block (11) fastened to the center block (9). The center block (9) comprises operative connection means for fastening a lower rotary unit (24) for rotatably mounting the center part (4) about rotary axis (6).

No. of Pages : 28 No. of Claims : 18

(12) PATENT APPLICATION PUBLICATION
(19) INDIA
(22) Date of filing of Application :26/09/2012

(21) Application No.8263/CHENP/2012 A
(43) Publication Date : 21/03/2014

(54) Title of the invention : MELT EXTRUDED FILM

(51) International classification	:B29C47/00,A61K9/70,B29C55/00
(31) Priority Document No	:61/317899
(32) Priority Date	:26/03/2010
(33) Name of priority country	:U.S.A.
(86) International Application No	:PCT/US2011/026234
Filing Date	:25/02/2011
(87) International Publication No	:WO 2011/119289
(61) Patent of Addition to Application Number	:NA
Filing Date	:NA
(62) Divisional to Application Number	:NA
Filing Date	:NA

(71)**Name of Applicant :**
1)DOW GLOBAL TECHNOLOGIES LLC
Address of Applicant :2040 Dow Center Midland MI 48674 U.S.A.
(72)**Name of Inventor :**
1)HALL Mark
2)READ Michael
3)SHRESTHA Uma

(57) Abstract :
A melt extruded film is produced by a process which comprises the steps of blending a) a water soluble polymer b) an active ingredient and c) optional additives and subjecting the blend to melt extrusion to produce an extruded melt and drawing the extruded melt at a draw down ratio of from 1.5 to 20 to a film of a thickness of at least 0.04 mm.

No. of Pages : 23 No. of Claims : 15

(12) PATENT APPLICATION PUBLICATION
(19) INDIA
(22) Date of filing of Application :26/09/2012
(21) Application No.8264/CHENP/2012 A
(43) Publication Date : 21/03/2014

(54) Title of the invention : CRIMP TERMINAL AND CONNECTION STRUCTURE OF CRIMP TERMINAL TO ELECTRIC WIRE

(51) International classification :H01R4/18
(31) Priority Document No :2010081810
(32) Priority Date :31/03/2010
(33) Name of priority country :Japan
(86) International Application No :PCT/JP2011/057709
Filing Date :28/03/2011
(87) International Publication No :WO 2011/125626
(61) Patent of Addition to Application Number :NA
Filing Date :NA
(62) Divisional to Application Number :NA
Filing Date :NA

(71)**Name of Applicant :**
1)YAZAKI CORPORATION
Address of Applicant :4 28 Mita 1 chome Minato ku Tokyo 1088333 Japan
(72)**Name of Inventor :**
1)SATO Kei
2)KODAMA Shinji

(57) Abstract :
Disclosed is a crimp terminal that is such that water does not infiltrate to the conductor of a wire even if water adheres to the wire connection section eliminating the problem of corrosion of the conductor of the wire. In the crimp terminal serration (31 35) is in a direction intersecting with the lengthwise direction of the wire (W) provided on the entire inner surface of the wire connection section (12) of which: a conductor crimping section (14) of a wire connection section (12) is formed in a roughly U shaped cross section having a bottom plate section (21) and a pair of conductor crimping parts (22); a covered crimping section (15) is formed in a U shaped cross section having a bottom plate section (23) and a pair of covered crimping parts (24); the bottom plate section (21) of the conductor crimping section (14) and the bottom plate section (23) of the covered crimping section (15) are formed together; and a pair of covering walls (17) are formed between the conductor crimping parts (22) and the covered crimping parts (24) continuously with same.

No. of Pages : 39 No. of Claims : 6

(12) PATENT APPLICATION PUBLICATION
(19) INDIA
(22) Date of filing of Application :16/07/2012
(21) Application No.6202/CHENP/2012 A
(43) Publication Date : 21/03/2014

(54) Title of the invention : GASKET ASSEMBLY WITH IMPROVED LOCATING AND RETENTION PIN AND METHOD OF CONSTRUCTION THEREOF

(51) International classification :F16J15/08,F16J15/12,F16J15/06
(31) Priority Document No :61/287,848
(32) Priority Date :18/12/2009
(33) Name of priority country :U.S.A.
(86) International Application No :PCT/US2010/061251
Filing Date :20/12/2010
(87) International Publication No:WO 2011/075717 A1
(61) Patent of Addition to Application Number :NA
Filing Date :NA
(62) Divisional to Application Number :NA
Filing Date :NA

(71)**Name of Applicant :**
1)FEDERAL MOGUL CORPORATION
Address of Applicant :26555 Northwestern Highway Southfield MI 48033 U.S.A.
(72)**Name of Inventor :**
1)LESNAU Edward IV
2)NOTEBOOM Ron M.
3)LAFRENZ Chris
4)SAS John

(57) Abstract :
A gasket assembly (10) and method of construction is provided. The assembly includes a carrier body (12) having opposite planar surfaces (20, 22) with at least one media - conveying opening (16) extending through the planar surfaces with at least one through opening (38) spaced radially from the at least one media conveying opening (16). Further, the carrier body has at least one projection (28) formed of the material of the carrier body. The at least one projection extends from the at least one through opening (38) outwardly from at least one of the planar surfaces. The assembly further includes an elastomeric material (32) encapsulating the projection.

No. of Pages : 22 No. of Claims : 29

(12) PATENT APPLICATION PUBLICATION
(19) INDIA
(22) Date of filing of Application :19/07/2012
(21) Application No.6348/CHENP/2012 A
(43) Publication Date : 21/03/2014

(54) Title of the invention : PROTEASOME INHIBITORS AND PROCESSES FOR THEIR PREPARATION PURIFICATION AND USE

(51) International classification :C07F5/02
(31) Priority Document No :61/288, 957
(32) Priority Date :22/12/2009
(33) Name of priority country :U.S.A.
(86) International Application No :PCT/US2010/061695
Filing Date :22/12/2010
(87) International Publication No :WO 2011/087822
(61) Patent of Addition to Application Number :NA
Filing Date :NA
(62) Divisional to Application Number :NA
Filing Date :NA

(71)**Name of Applicant :**
1)CEPHALON INC.
Address of Applicant :41 Moores Road Frazer PA 19355 U.S.A.
(72)**Name of Inventor :**
1)ROEMMELE Renee Caroline

(57) Abstract :
The invention provides boronic esters of Formula (I) wherein R R R and R are as described herein and methods for the preparation and purification thereof.

No. of Pages : 138 No. of Claims : 17

(12) PATENT APPLICATION PUBLICATION
(19) INDIA
(22) Date of filing of Application :23/07/2012
(21) Application No.6479/CHENP/2012 A
(43) Publication Date : 21/03/2014

(54) Title of the invention : POLYMER COMPOSITION AND MOLDED ARTICLES SHAPED OF THE SAME

(51) International classification :C08L23/02,C08J5/00,C08K5/00
(31) Priority Document No :NA
(32) Priority Date :NA
(33) Name of priority country :NA
(86) International Application No :PCT/JP2009/071900
Filing Date :25/12/2009
(87) International Publication No :WO 2011/077592
(61) Patent of Addition to Application Number :NA
Filing Date :NA
(62) Divisional to Application Number :NA
Filing Date :NA

(71)**Name of Applicant :**
1)SUMITOMO CHEMICAL COMPANY LIMITED
Address of Applicant :27 1 Shinkawa 2 chome Chuo ku Tokyo 1048260 Japan
(72)**Name of Inventor :**
1)YAMAKOSHI Shizuto
2)NAGAMATSU Tatsuhiro

(57) Abstract :
The present invention relates to a polymer composition comprising 100 parts by weight of an olefin based polymer and 0.01 to 100 parts by weight of a branched fatty acid and 0.01 to 200 parts by weight of a releasable active compound per 100 parts by weight of said olefin based polymer.

No. of Pages : 38 No. of Claims : 9

(12) PATENT APPLICATION PUBLICATION
(19) INDIA
(22) Date of filing of Application :26/07/2012
(21) Application No.6605/CHENP/2012 A
(43) Publication Date : 21/03/2014

(54) Title of the invention : INTEGRATED PERMANENT MONITORING SYSTEM

(51) International classification :G01V9/00,E21B47/06,E21B47/00
(31) Priority Document No :61/299,684
(32) Priority Date :29/01/2010
(33) Name of priority country :U.S.A.
(86) International Application No :PCT/US2011/021451
Filing Date :17/01/2011
(87) International Publication No :WO 2011/094082 A2
(61) Patent of Addition to Application Number :NA
Filing Date :NA
(62) Divisional to Application Number :NA
Filing Date :NA

(71)**Name of Applicant :**
1)SCHLUMBERGER CANADA LIMITED
Address of Applicant :525 3rd Avenue Southwest Calgary Alberta T2P 0G4 Canada
2)SERVICES PETROLIERS SCHLUMBERGER
3)SCHLUMBERGER HOLDINGS LIMITED
4)SCHLUMBERGER TECHNOLOGY B.V.
5)PRAD RESEARCH AND DEVELOPMENT LIMITED
6)SCHLUMBERGER TECHNOLOGY CORPORATION
(72)**Name of Inventor :**
1)RIOUFOL Emmanuel
2)POHL Didier

(57) Abstract :
A technique facilitates monitoring of parameters in a well environment. At least one sensor is positioned downhole in a wellbore to measure a desired parameter or parameters. Data from the sensor is sent uphole to an electrical wellhead outlet which is integrated into the wellhead. The wellhead and integrated electrical wellhead outlet provide a simple system architecture that may be used to process well parameter data as desired.

No. of Pages : 14 No. of Claims : 24

(12) PATENT APPLICATION PUBLICATION
(19) INDIA
(22) Date of filing of Application :14/08/2012
(21) Application No.7088/CHENP/2012 A
(43) Publication Date : 21/03/2014

(54) Title of the invention : BACK CONTACT SOLAR CELL WIRING SHEET SOLAR CELL HAVING WIRING SHEET SOLAR CELL MODULE AND PRODUCTION METHOD FOR SOLAR CELL HAVING WIRING SHEET

(51) International classification :H01L31/04
(31) Priority Document No :2010-012361
(32) Priority Date :22/01/2010
(33) Name of priority country :Japan
(86) International Application No :PCT/JP2011/051116
Filing Date :21/01/2011
(87) International Publication No :WO 2011/090169
(61) Patent of Addition to Application Number :NA
Filing Date :NA
(62) Divisional to Application Number :NA
Filing Date :NA

(71)**Name of Applicant :**
1)SHARP KABUSHIKI KAISHA
Address of Applicant :22 22 Nagaike cho Abeno ku Osaka shi Osaka 5458522 Japan
(72)**Name of Inventor :**
1)MIKAMI Rui
2)ABIKO Yoshiya
3)SAINOO Yasushi
4)TSUNEMI Akiko
5)MORII Kohjiroh
6)SATOMURA Masafumi
7)OKADA Hideo
8)NISHINA Tomohiro
9)NAITO Shinsuke
10)YAMADA Takayuki
11)SHIRAKI Tomoyo

(57) Abstract :
The back contact solar cell has alignment marks (25a 25b) in an inner region inside the periphery of an electrode pattern comprising a plurality of electrodes (24) of a first conductivity type and a plurality of electrodes (25) of a second conductivity type formed on one surface of a semiconductor substrate (21) As a result of this configuration it is possible to align the rear surface electrodes of the solar cell and the wiring of the wiring sheet with a higher degree of precision.

No. of Pages : 136 No. of Claims : 21

(12) PATENT APPLICATION PUBLICATION
(19) INDIA
(22) Date of filing of Application :26/09/2012
(21) Application No.8284/CHENP/2012 A
(43) Publication Date : 21/03/2014

(54) Title of the invention : DRINKING VALVE

(51) International classification :A01K39/02
(31) Priority Document No :10 2010 009 943.0
(32) Priority Date :02/03/2010
(33) Name of priority country :Germany
(86) International Application No :PCT/EP2011/000611
Filing Date :09/02/2011
(87) International Publication No :WO 2011/107211
(61) Patent of Addition to Application Number :NA
Filing Date :NA
(62) Divisional to Application Number :NA
Filing Date :NA

(71)**Name of Applicant :**
1)LUBING MASCHINENFABRIK LUDWIG BENING GMBH & CO. KG
Address of Applicant :Lubingstrae 6 49406 Barnstorf Germany
(72)**Name of Inventor :**
1)SCHUMACHER Egon
2)MEYER Wolfgang

(57) Abstract :
Drinking valves (10) having a plastics housing (18) are susceptible to aggressive cleaning agents. The invention makes provision somewhat to increase the wall thickness of the plastics housing (18) by the wall thickness corresponding to at least 17% of the maximum inside diameter of the plastics housing (18). It has surprisingly been shown that a plastics housing (18) having such a wall thickness is more capable of resisting aggressive cleaning agents than conventional drinking valves having a plastics housing.

No. of Pages : 24 No. of Claims : 14

(12) PATENT APPLICATION PUBLICATION
(19) INDIA
(22) Date of filing of Application :25/10/2011
(21) Application No.3668/CHE/2011 A
(43) Publication Date : 21/03/2014

(54) Title of the invention : STABLE CRYSTALLINE FORMS OF PITAVASTATIN CALCIUM

(51) International classification :C01B
(31) Priority Document No :NA
(32) Priority Date :NA
(33) Name of priority country :NA
(86) International Application No :NA
Filing Date :NA
(87) International Publication No : NA
(61) Patent of Addition to Application Number :NA
Filing Date :NA
(62) Divisional to Application Number :NA
Filing Date :NA

(71)**Name of Applicant :**
1)MATRIX LABORATORIES LTD
Address of Applicant :PLOT NO 564/A/22, ROAD NO 92, JUBILEE HILLS, HYDERABAD - 500 033 Andhra Pradesh India
(72)**Name of Inventor :**
1)SETHI, MADHURESH KUMAR
2)JETTI, RAMAKOTESWARA RAO
3)ARIKATLA, SIVALAKSHMIDEVI
4)MAHAJAN, SANJAY
5)MARA, BHAIRAIAH

(57) Abstract :
The present invention provides stable crystalline Form of Pravastatin calcium having moisture content between 6-12% at less than or equal to 50 % relative humidity. The present invention also provides stable crystalline Form of Pitavastatin calcium having moisture content between 6-12% at above 50 % relative humidity.

No. of Pages : 14 No. of Claims : 7

(12) PATENT APPLICATION PUBLICATION
(19) INDIA
(22) Date of filing of Application :18/09/2012
(21) Application No.3868/CHE/2012 A
(43) Publication Date : 21/03/2014

(54) Title of the invention : CHEMICAL FREE FUEL ADDITIVE

(51) International classification :C10L
(31) Priority Document No :NA
(32) Priority Date :NA
(33) Name of priority country :NA
(86) International Application No :NA
Filing Date :NA
(87) International Publication No : NA
(61) Patent of Addition to Application Number :NA
Filing Date :NA
(62) Divisional to Application Number :NA
Filing Date :NA

(71)**Name of Applicant :**
1)ABDUL AZIS SHEIK MATHAR SHAHIB
Address of Applicant :25/33, LAKSHMI SUNDARAM COLONY 5TH STREET, DINDIGUL - 624 005 Tamil Nadu India
(72)**Name of Inventor :**
1)ABDUL AZIS SHEIK MATHAR SHAHIB

(57) Abstract :
This fuel additive helps to maximize mileage , reduce pollution, reduce vibration and no out come of hazardous gases. This is simply prepared by diesel or bio diesel mixed with methanol and distilled at 200 for every litre of diesel or bio diesel with methanol we get only 20% fuel additive and the rest may be used again industrial for thermal application

No. of Pages : 6 No. of Claims : 1

(12) PATENT APPLICATION PUBLICATION
(19) INDIA
(22) Date of filing of Application :15/06/2011
(21) Application No.4176/CHENP/2011 A
(43) Publication Date : 21/03/2014

(54) Title of the invention : ASSEMBLY METHOD FOR A TILED RADIATION DETECTOR

(51) International classification :G01T1/20
(31) Priority Document No :08169616.3
(32) Priority Date :21/11/2008
(33) Name of priority country :EPO
(86) International Application No :PCT/IB2009/055063
Filing Date :13/11/2009
(87) International Publication No : NA
(61) Patent of Addition to Application Number :NA
Filing Date :NA
(62) Divisional to Application Number :NA
Filing Date :NA

(71)**Name of Applicant :**
1)KONINKLIJKE PHILIPS ELECTRONICS N.V.
Address of Applicant :GROENEWOUDSEWEG 1 EINDHOVEN 5621 BA NETHERLANDS
(72)**Name of Inventor :**
1)JORRITSMA Jorrit
2)POORTER Tiemen
3)LIJTEN Gerardus F. C. M.
4)VAN ROOSMALEN Johannes H. M.
5)SENS Martinus M.
6)GROB Timon R.
7)TER LAAK Michael J. F. M.

(57) Abstract :
A tiled detector assembly (1000) and a method for making a tiled radiation detector (1000) is described. The innovative feature of this method is that the xyz misalignment of the detector tiles (304, 304™), the origin of various image artifacts, can be significantly reduced by accurate sizing and alignment of the detector tiles (304, 304™). Consequently, image quality, yield and reliability of as-produced tiled radiation detectors are considerably improved.

No. of Pages : 28 No. of Claims : 15

(12) PATENT APPLICATION PUBLICATION
(19) INDIA
(22) Date of filing of Application :15/05/2012
(21) Application No.4285/CHENP/2012 A
(43) Publication Date : 21/03/2014

(54) Title of the invention : 2-SUBSTITUTED-ETHYNYLTHIAZOLE DERIVATIVES AND USES OF SAME

(51) International classification :A61K31/425, A01N43/78
(31) Priority Document No :61/253,452
(32) Priority Date :20/10/2009
(33) Name of priority country :U.S.A.
(86) International Application No :PCT/US2010/053379
Filing Date :20/10/2010
(87) International Publication No :WO 2011/050063 A1
(61) Patent of Addition to Application Number :NA
Filing Date :NA
(62) Divisional to Application Number :NA
Filing Date :NA

(71)**Name of Applicant :**
1)H. LUNDBECK A/S
Address of Applicant :9, OTTILIAVEJ, DK-2500 VALBY-COPENHAGEN Denmark
(72)**Name of Inventor :**
1)PACKIARAJAN, MATHIVANAN
2)HOPPER, ALLEN
3)SAMS, ANETTE, GRAVEN
4)MIKKELSEN, GITTE, KOBBEROEE
5)GRENON, MICHEL

(57) Abstract :
The present invention provides 2-substituted-ethynylthiazole derivatives of formula (I): wherein R1, R2 and X are as defined herein, or a pharmaceutically acceptable salt thereof; and pharmaceutical compositions and uses of the same.

No. of Pages : 111 No. of Claims : 20

(12) PATENT APPLICATION PUBLICATION
(19) INDIA
(22) Date of filing of Application :28/08/2012
(21) Application No.7427/CHENP/2012 A
(43) Publication Date : 21/03/2014

(54) Title of the invention : LIGAND GUANIDINYL FUNCTIONALIZED POLYMERS

(51) International classification :G01N33/543,C07C279/00,C08G73/00
(31) Priority Document No :61/310,005
(32) Priority Date :03/03/2010
(33) Name of priority country :U.S.A.
(86) International Application No :PCT/US2011/024422
Filing Date :11/02/2011
(87) International Publication No :WO 2011/109151 A1
(61) Patent of Addition to Application Number :NA
Filing Date :NA
(62) Divisional to Application Number :NA
Filing Date :NA

(71)**Name of Applicant :**
1)3M INNOVATIVE PROPERTIES COMPANY
Address of Applicant :3M Center Post Office Box 33427 Saint Paul Minnesota 55133 3427 U.S.A.
(72)**Name of Inventor :**
1)RASMUSSEN Jerald K.
2)SESHADRI Kannan
3)FITZSIMONS Robert T. Jr.
4)HEMBRE James I.
5)BOTHOF Catherine A.
6)SATTERWHITE Erin A.
7)GRIESGRABER George W.
8)HE Yi
9)HADDAD Louis C.

(57) Abstract :
Ligand functionalized substrates methods of making ligand functionalized substrates and methods of using functionalized substrates are disclosed.

No. of Pages : 39 No. of Claims : 22

(12) PATENT APPLICATION PUBLICATION
(19) INDIA
(22) Date of filing of Application :27/09/2012
(21) Application No.8301/CHENP/2012 A
(43) Publication Date : 21/03/2014

(54) Title of the invention : DISPLAY DEVICE AND METHOD FOR MANUFACTURING THE SAME

(51) International classification :G02F1/1339
(31) Priority Document No :2010095879
(32) Priority Date :19/04/2010
(33) Name of priority country :Japan
(86) International Application No :PCT/JP2011/002045
Filing Date :06/04/2011
(87) International Publication No :WO 2011/132374
(61) Patent of Addition to Application Number :NA
Filing Date :NA
(62) Divisional to Application Number :NA
Filing Date :NA

(71)**Name of Applicant :**
1)SHARP KABUSHIKI KAISHA
Address of Applicant :22 22 Nagaike cho Abeno ku Osaka shi Osaka 5458522 Japan
(72)**Name of Inventor :**
1)MORIWAKI Hiroyuki

(57) Abstract :
In the disclosed display device a sealant (40) into which a sealant additive containing pulverized glass fibers (42) and/or conductive beads (43) is mixed is disposed in a rectangle at the outer edge of a space between a first substrate (30) and a second substrate (20) and a display region is formed inside said sealant (40). Ribs (36) that protrude towards the second substrate (20) are formed on the first substrate (30) along the sealant (40) midway through the width thereof with a gap between the ribs (36) and the second substrate (20). Either the sealant additive in the sealant (40) is more thinly distributed in the region (SL2) corresponding to the ribs (36) than in the region (SL1) outwards of the ribs (36) or no sealant additive is mixed into the sealant (40) in the region (SL2) corresponding to the ribs (36).

No. of Pages : 70 No. of Claims : 19

(12) PATENT APPLICATION PUBLICATION
(19) INDIA
(22) Date of filing of Application :27/09/2012
(21) Application No.8302/CHENP/2012 A
(43) Publication Date : 21/03/2014

(54) Title of the invention : PROCESS FOR PREPARING POLYETHER ALCOHOLS

(51) International classification :C08G65/00
(31) Priority Document No :10155207.3
(32) Priority Date :02/03/2010
(33) Name of priority country :EPO
(86) International Application No :PCT/EP2011/052556
Filing Date :22/02/2011
(87) International Publication No :WO 2011/107367
(61) Patent of Addition to Application Number :NA
Filing Date :NA
(62) Divisional to Application Number :NA
Filing Date :NA

(71)**Name of Applicant :**
1)BASF SE
Address of Applicant :67056 Ludwigshafen Germany
(72)**Name of Inventor :**
1)ZARBAKHSH Sirus
2)SCHTTE Markus
3)SEIFERT Holger
4)CHILEKAR Vinit
5)ELING Berend
6)RUDLOFF Jan

(57) Abstract :
In a process for preparing a polyether alcohol d1) by reaction of a) at least one compound having at least three hydrogen atoms reactive with alkylene oxides and a molecular weight Mn of not more than 600 g/mol with b) an alkylene oxide by using c) a catalyst, said reaction is carried out in the presence of a polyether alcohol d) having a hydroxyl number of 100-800 mg KOH/g and a functionality of 1.5 to 8.

No. of Pages : 12 No. of Claims : 16

(12) PATENT APPLICATION PUBLICATION
(19) INDIA
(22) Date of filing of Application :23/07/2012
(21) Application No.6485/CHENP/2012 A
(43) Publication Date : 21/03/2014

(54) Title of the invention : LACTIC BACTERIUM FOR TEXTURIZING FOOD PRODUCTS SELECTED ON BASIS OF PHAGE RESISTANCE

(51) International classification :C12R1/46,A23C9/12,A23L1/054
(31) Priority Document No :PA 2010 00070
(32) Priority Date :28/01/2010
(33) Name of priority country :Denmark
(86) International Application No :PCT/EP2011/051239
Filing Date :28/01/2011
(87) International Publication No :WO 2011/092300
(61) Patent of Addition to Application Number :NA
Filing Date :NA
(62) Divisional to Application Number :NA
Filing Date :NA

(71)**Name of Applicant :**
1)CHR. HANSEN A/S
Address of Applicant :Boege Alle 10 12 DK 2970 Hoersholm Denmark
(72)**Name of Inventor :**
1)JANZEN Thomas
2)CHRISTIANSEN Ditte Ellegaard

(57) Abstract :
The present invention relates to a bacterial cell with texturizing property starter cultures comprising the cell and dairy products fermented with the starter culture.

No. of Pages : 38 No. of Claims : 48

(12) PATENT APPLICATION PUBLICATION
(19) INDIA
(22) Date of filing of Application :23/07/2012
(21) Application No.6489/CHENP/2012 A
(43) Publication Date : 21/03/2014

(54) Title of the invention : PROCESSES FOR THE PREPARATION OF 4 [3 [4 (6 FLUORO 1 2 BENZISOXAZOL 3 YL)PIPERIDINO]PROPOXY] 3 METHOXYACETOPHENONE AND INTERMEDIATES THEREOF

(51) International classification :A01N43/42
(31) Priority Document No :2610/CHE/2010
(32) Priority Date :07/09/2010
(33) Name of priority country :India
(86) International Application No :PCT/IN2011/000473
Filing Date :18/07/2011
(87) International Publication No :WO 2012/032532 A1
(61) Patent of Addition to Application Number :NA
Filing Date :NA
(62) Divisional to Application Number :NA
Filing Date :NA

(71)**Name of Applicant :**
1)SYMED LABS LIMITED
Address of Applicant :8 3 166/6&7 IInd Floor Sree Arcade Erragadda Hyderabad 500018 Andhra Pradesh India
(72)**Name of Inventor :**
1)MOHAN RAO dodda
2)KRISHNA REDDY pingili
3)VENKAT REDDY buthukuri

(57) Abstract :
The present invention relates to processes for the preparation of 4 [3 [4 (6 fluoro 1 2 benzisoxazol 3 yl)piperidino]propoxy] 3 methoxyacetophenone and intermediates thereof. The present invention also provides a process for purifying 4 [3 [4 (6 fluoro 1 2 benzisoxazol 3 yl)piperidino]propoxy] 3 methoxyacetophenone to obtain the purity greater than about 98.0 area % to about 99.0 area % as measured by HPLC preferably greater than about 99.0 area % to about 99.5 area% more preferably greater about 99.5 area % to about 99.9 area %. individual impurities lower than about 0.15 area % preferably lower than about 0.1 % and total impurities lower than about 0.5 area % by HPLC.

No. of Pages : 40 No. of Claims : 15

(12) PATENT APPLICATION PUBLICATION
(19) INDIA
(22) Date of filing of Application :26/07/2012
(21) Application No.6614/CHENP/2012 A
(43) Publication Date : 21/03/2014

(54) Title of the invention : MICROORGANISMS AND METHODS FOR THE BIOSYNTHESIS OF P TOLUATE AND TEREPHTHALATE

(51) International classification :C12N9/00
(31) Priority Document No :61/299794
(32) Priority Date :29/01/2010
(33) Name of priority country :U.S.A.
(86) International Application No :PCT/US2011/022046
Filing Date :21/01/2011
(87) International Publication No :WO 2011/094131 A1
(61) Patent of Addition to Application Number :NA
Filing Date :NA
(62) Divisional to Application Number :NA
Filing Date :NA

(71)**Name of Applicant :**
1)GENOMATICA INC.
Address of Applicant :10520 Wateridge Circle San Diego CA 92121 U.S.A.
(72)**Name of Inventor :**
1)OSTERHOUT Robin E.

(57) Abstract :
The invention provides non naturally occurring microbial organisms having a (2 hydroxy 3 methyl 4 oxobutoxy)phosphonate pathway p toluate pathway and/or terephthalate pathway. The invention additionally provides methods of using such organisms to produce (2 hydroxy 3 methyl 4 oxobutoxy)phosphonate pathway p toluate pathway or terephthalate pathway.

No. of Pages : 66 No. of Claims : 53

(12) PATENT APPLICATION PUBLICATION
(19) INDIA
(22) Date of filing of Application :01/08/2012
(21) Application No.6784/CHENP/2012 A
(43) Publication Date : 21/03/2014

(54) Title of the invention : COMPRESSOR

(51) International classification :F04B39/00,F04B39/02,F04C29/00
(31) Priority Document No :2010010222
(32) Priority Date :20/01/2010
(33) Name of priority country :Japan
(86) International Application No :PCT/JP2011/050876
Filing Date :19/01/2011
(87) International Publication No :WO 2011/090075
(61) Patent of Addition to Application Number :NA
Filing Date :NA
(62) Divisional to Application Number :NA
Filing Date :NA

(71)**Name of Applicant :**
1)DAIKIN INDUSTRIES LTD.
Address of Applicant :Umeda Center Building 4 12 Nakazaki Nishi 2 Chome Kita ku Osaka shi Osaka 5308323 Japan
(72)**Name of Inventor :**
1)YAMADA Masahiro
2)MURAKAMI Yasuhiro
3)TAKAHASHI Nobuo

(57) Abstract :
A compressor having increased reliability obtained by appropriately measuring the temperature of the inside of the compressor. A compressor is provided with a casing (10) a compression mechanism (15) a drive shaft (17) a main frame (23) a motor (16) a flow path forming member (91) and a temperature measurement mechanism (76). The casing contains a lubricating oil at the bottom section thereof. The compression mechanism compresses a refrigerant. The drive shaft drives the compression mechanism. The main frame has the compression mechanism placed thereon and rotatably supports the drive shaft. The motor drives the drive shaft. The flow path forming member forms an oil flow path (92). The oil flow path is a space which is located near the inner peripheral surface of the casing and through which the lubricating oil flows the lubricating oil lubricating slide sections including the compression mechanism and the drive shaft. The temperature measurement mechanism is disposed outside the casing. The temperature measurement mechanism measures a portion of the outer peripheral surface of the casing the portion being located near the oil flow path.

No. of Pages : 59 No. of Claims : 8

(12) PATENT APPLICATION PUBLICATION
(19) INDIA
(22) Date of filing of Application :27/09/2012
(21) Application No.8313/CHENP/2012 A
(43) Publication Date : 21/03/2014

(54) Title of the invention : STEREOSCOPIC VIDEO DISPLAY DEVICE AND OPERATION METHOD OF STEREOSCOPIC VIDEO DISPLAY DEVICE

(51) International classification :H04N13/04,G02B27/22
(31) Priority Document No :2010049844
(32) Priority Date :05/03/2010
(33) Name of priority country :Japan
(86) International Application No :PCT/JP2011/055065
Filing Date :04/03/2011
(87) International Publication No :WO 2011/108702
(61) Patent of Addition to Application Number :NA
Filing Date :NA
(62) Divisional to Application Number :NA
Filing Date :NA

(71)**Name of Applicant :**
1)Sharp Kabushiki Kaisha
Address of Applicant :22 22 Nagaike cho Abeno ku Osaka shi Osaka 5458522 Japan
(72)**Name of Inventor :**
1)CHIKAZAWA Takahiro

(57) Abstract :
Because a human being has independent visual capabilities in right and left eyes, a right-eye image and a left-eye image constituting a stereoscopic content video are visually recognized as different images (apart from the difference due to disparity), and as a result, stereoscopic viewing may not be performed successfully. Disclosed is a stereoscopic video display device wherein before an actual stereoscopic video is displayed, left-eye and right-eye test images both of which include an identical object, are alternately displayed at a comparatively low speed, and each of the images are respectively visually recognized by the left eye and the right eye of the viewer as different images, and input for image quality adjustment can be received independently for the right and the left so that the identical objects in both of the images can be viewed to be identical by the viewer. Then, using the image quality adjustment value, image adjustment of the image for the actual stereoscopic content video display is performed.

No. of Pages : 70 No. of Claims : 22

(12) PATENT APPLICATION PUBLICATION
(19) INDIA
(22) Date of filing of Application :29/08/2012
(21) Application No.7485/CHENP/2012 A
(43) Publication Date : 21/03/2014

(54) Title of the invention : A DEVICE FOR INTERLOCKING AT LEAST TWO SINGLE OR MULTIPOLE CIRCUIT BREAKERS

(51) International classification :H01H9/26,H01H9/28
(31) Priority Document No :MI2000A002791
(32) Priority Date :21/12/2000
(33) Name of priority country :Italy
(86) International Application No :PCT/EP2001/14694
Filing Date :11/12/2001
(87) International Publication No :WO 2002/50853 A1
(61) Patent of Addition to Application Number :NA
Filing Date :NA
(62) Divisional to Application Number :1130/CHENP/2008
Filed on :06/03/2008

(71)**Name of Applicant :**
1)ABB S.P.A.
Address of Applicant :VIA VITTOR PISANI, 16, I-20124 MILANO Italy
(72)**Name of Inventor :**
1)AZZOLA, LUCIO
2)CARRARA, OSVALDO

(57) Abstract :
A device for interlocking at least two single or multipole circuit breakers, of which: a first circuit breaker, suitable to be fixed to a mounting plate of the first and second circuit breakers; - second circuit breaker, suitable to be fixed by virtue of fixing means to the first bracket and to be supported thereby; - an interlocking element, provided with a contoured body that is operatively coupled to be second bracket so that it can move with respect to it, the interlocking element being suitable to be rigidly connected to the second bracket, by virtue of locking means, in a chosen position in which it interacts operatively with at least the first opening /closure lever in a condition that corresponds to the opening of the first circuit breaker, preventing its movement and preventing the circuit breakers from being closed simultaneously.

No. of Pages : 21 No. of Claims : 8

(12) PATENT APPLICATION PUBLICATION
(19) INDIA
(22) Date of filing of Application :27/09/2012
(21) Application No.8320/CHENP/2012 A
(43) Publication Date : 21/03/2014

(54) Title of the invention : SOCIAL HOME PAGE

(51) International classification :G06Q50/00
(31) Priority Document No :12/761666
(32) Priority Date :16/04/2010
(33) Name of priority country :U.S.A.
(86) International Application No :PCT/US2011/031035
Filing Date :04/04/2011
(87) International Publication No :WO 2011/130028
(61) Patent of Addition to Application Number :NA
Filing Date :NA
(62) Divisional to Application Number :NA
Filing Date :NA

(71)**Name of Applicant :**
1)MICROSOFT CORPORATION
Address of Applicant :One Microsoft Way Redmond Washington 98052 6399 U.S.A.
(72)**Name of Inventor :**
1)KICIMAN Emre Mehmet
2)WANG Chun Kai
3)KAMIREDDY Sreeharsha
4)CUCERZAN Silviu Petru

(57) Abstract :
Technologies pertaining to the creation of personalized data for an individual including personalized data based on a social networking participant s social networking data entity extraction and automatic collage generation are described herein. In one implementation the personalized data is used to provide a personalized social based replacement for a default UI element. In one implementation a disambiguated named entity is extracted from user generated content in a social networking application a socially interesting photomontage is automatically generated based on photographs from a social networking application and the photomontage is rendered with hotspots containing socially relevant annotations.

No. of Pages : 70 No. of Claims : 10

(12) PATENT APPLICATION PUBLICATION
(19) INDIA
(22) Date of filing of Application :27/09/2012
(21) Application No.8321/CHENP/2012 A
(43) Publication Date : 21/03/2014

(54) Title of the invention : PRODUCT SYNTHESIS FROM MULTIPLE SOURCES

(51) International classification :G06F17/00,G06Q30/00
(31) Priority Document No :12/764676
(32) Priority Date :21/04/2010
(33) Name of priority country :U.S.A.
(86) International Application No :PCT/US2011/033306
Filing Date :20/04/2011
(87) International Publication No :WO 2011/133705
(61) Patent of Addition to Application Number :NA
Filing Date :NA
(62) Divisional to Application Number :NA
Filing Date :NA

(71)**Name of Applicant :**
1)MICROSOFT CORPORATION
Address of Applicant :One Microsoft Way Redmond Washington 98052 6399 U.S.A.
(72)**Name of Inventor :**
1)FUXMAN Ariel
2)NGUYEN Hoa
3)SILVA Juliana Freire de Lima e
4)PAPARIZOS Stelios
5)AGRAWAL Rakesh
6)CHEN Zhimin
7)COLAGIOVANNI Lawrence William
8)SIKCHI Prakash

(57) Abstract :
Methods and systems for automatically synthesizing product information from multiple data sources into an on line catalog are disclosed and in particular for automatically synthesizing the product information based on attribute value pairs. Information for a product may be obtained via entity extraction feed ingestion and other mechanisms from a plurality of structured and unstructured data sources having different taxonomies and schemas. Product information may additionally or alternatively be obtained or derived based on popularity data. The product information may be cleansed segmented and normalized. The product information may be clustered so closest products attribute names and attribute values are associated. A representative value for an attribute name may be determined and the on line catalog may be updated so that entries are comprehensive meaningful and useful to a catalog user. Updates from at least 500 million different data sources may be scheduled to occur as frequently as several times daily.

No. of Pages : 40 No. of Claims : 15

(12) PATENT APPLICATION PUBLICATION
(19) INDIA
(22) Date of filing of Application :27/09/2012
(21) Application No.8322/CHENP/2012 A
(43) Publication Date : 21/03/2014

(54) Title of the invention : AUTOMATED RECOVERY AND ESCALATION IN COMPLEX DISTRIBUTED APPLICATIONS

(51) International classification :G06F15/16,G06F11/30,G06F9/44
(31) Priority Document No :12/764263
(32) Priority Date :21/04/2010
(33) Name of priority country :U.S.A.
(86) International Application No :PCT/US2011/030458
Filing Date :30/03/2011
(87) International Publication No :WO 2011/133299
(61) Patent of Addition to Application Number :NA
Filing Date :NA
(62) Divisional to Application Number :NA
Filing Date :NA

(71)**Name of Applicant :**
1)MICROSOFT CORPORATION
Address of Applicant :One Microsoft Way Redmond Washington 98052 6399 U.S.A.
(72)**Name of Inventor :**
1)AVNER Jon
2)BRADY Shane
3)YIM Wing Man
4)SHIDA Haruya
5)YAZICIOGLU Selim
6)LUKYANOV Andrey
7)ALINGER Brent
8)NASH Colin

(57) Abstract :
Alerts based on detected hardware and/or software problems in a complex distributed application environment are mapped to recovery actions for automatically resolving problems. Non mapped alerts are escalated to designated individuals or teams through a cyclical escalation method that includes a confirmation hand off notice from the designated individual or team. Information collected for each alert as well as solutions through the escalation process may be recorded for expanding the automated resolution knowledge base.

No. of Pages : 22 No. of Claims : 15

(12) PATENT APPLICATION PUBLICATION
(19) INDIA
(22) Date of filing of Application :27/09/2012
(21) Application No.8314/CHENP/2012 A
(43) Publication Date : 21/03/2014

(54) Title of the invention : HEAT SHRINKABLE POLYESTER FILM PACKAGING BODY THEREOF THE METHOD FOR PRODUCING HEAT SHRINKABLE POLYESTER FILM

(51) International classification :C08J5/18
(31) Priority Document No :2010057380
(32) Priority Date :15/03/2010
(33) Name of priority country :Japan
(86) International Application No :PCT/JP2011/055297
Filing Date :08/03/2011
(87) International Publication No :WO 2011/114934
(61) Patent of Addition to Application Number :NA
Filing Date :NA
(62) Divisional to Application Number :NA
Filing Date :NA

(71)**Name of Applicant :**
1)TOYO BOSEKI KABUSHIKI KAISHA
Address of Applicant :2 8 Dojima Hama 2 chome Kita ku Osaka shi Osaka 5308230 Japan
(72)**Name of Inventor :**
1)HARUTA Masayuki
2)MUKOYAMA Yukinobu

(57) Abstract :
Disclosed is a heat-shrinkable polyester film which, even when stored in an outside warehouse which is not temperature-controlled during a hot summer, does not result in the film shrinking (so-called natural shrinkage); which further has a low decrease in shrinkage rate in the main shrinkage direction, and which can be attached aesthetically and efficiently without changing the temperature conditions for causing heat shrinkage when attaching as a label by he at-shrinking the same to a container (e.g., a plastic bottle). The disclosed heat-shrinkable polyester film comprises a polyester resin having ethylene terephthalate as a main component and containing at least 7 mol% of at least one monomer capable of forming an amorphous component in the whole component of polyester resin. In the heat-shrinkable polyester film, the 80°C -120°C glycerin shrinkage, the natural shrinkage rate after high temperature aging, and the number of initial break age after high-temperature aging are adjusted within a specific range. shrinking the same to a container (e.g. a plastic bottle). The disclosed heat shrinkable polyester film comprises a polyester resin having ethylene terephthalate as a main component and containing at least 7 mol% of one or more monomer components which can form a non crystalline component in the entire polyester resin component. In the heat shrinkable polyester film the 80C 120C glycerin shrinkage the natural shrinkage rate after high temperature aging and the number of breaks during an initial period after high temperature aging are adjusted within a specific range.

No. of Pages : 61 No. of Claims : 8

(12) PATENT APPLICATION PUBLICATION
(19) INDIA
(22) Date of filing of Application :27/09/2012
(21) Application No.8315/CHENP/2012 A
(43) Publication Date : 21/03/2014

(54) Title of the invention : PROCESS FOR TREATING A STREAM OF CRACKED GAS COMING FROM A HYDROCARBON PYROLYSIS PLANT AND ASSOCIATED PLANT

(51) International classification :C10G70/04,F25J3/02
(31) Priority Document No :10 52271
(32) Priority Date :29/03/2010
(33) Name of priority country :France
(86) International Application No :PCT/FR2011/050671
Filing Date :28/03/2011
(87) International Publication No :WO 2011/124818
(61) Patent of Addition to Application Number :NA
Filing Date :NA
(62) Divisional to Application Number :NA
Filing Date :NA

(71)**Name of Applicant :**
1)TECHNIP FRANCE
Address of Applicant :6 8 Alle de lArche Faubourg de lArche ZAC Danton F 92400 Courbevoie France
(72)**Name of Inventor :**
1)SIMON Yvon
2)LAUGIER Jean Paul

(57) Abstract :
Method for treating a cracked gas stream stemming from a hydrocarbon pyrolvsis installation, and installation associated therewith This method includes the separation of an upstream partly condensed cracked gas stream in an intermediate separator (44B) in order to recover an intermediate liquid (136), and an intermediate cracked gas stream (138) and the introduction of the intermediate liquid (140) into an intermediate demethanization column (68). The method comprises the sampling of a portion of the intermediate liquid (136) and the expansion of at least one first fraction (194) obtained from the sampled portion (190). It comprises the putting of the first expanded fraction in a heat exchange relationship with the intermediate head stream (146) from the column (68) for at least partly condensing the intermediate head stream (146). The method includes the separation of the intermediate partly condensed head stream in a first reflux separator (76) in order to form a liquid stream (148) introduced into the intermediate column (68) and a combustible gas stream (150). Single figure. includes sampling a portion of the intermediate liquid (136) and expanding at least a first fraction (194) obtained from the sampled portion (190). The process comprises bringing the expanded first fraction into heat exchange relationship with the overhead intermediate stream (146) from the column (68) in order for the overhead intermediate stream (146) to be at least partially condensed. The process includes the separation of the partially condensed overhead intermediate stream in a reflux first separator (76) so as to form a liquid stream (148) fed into the intermediate column (68) and a gaseous fuel stream (150).

No. of Pages : 27 No. of Claims : 17

(12) PATENT APPLICATION PUBLICATION
(19) INDIA
(22) Date of filing of Application :11/09/2012
(21) Application No.7828/CHENP/2012 A
(43) Publication Date : 21/03/2014

(54) Title of the invention : ILLUMINATION STRUCTURE OF ROOMLAMP

(51) International classification :B60Q3/02
(31) Priority Document No :2010068520
(32) Priority Date :24/03/2010
(33) Name of priority country :Japan
(86) International Application No :PCT/JP2011/056983
Filing Date :23/03/2011
(87) International Publication No :WO 2011/118633
(61) Patent of Addition to Application Number :NA
Filing Date :NA
(62) Divisional to Application Number :NA
Filing Date :NA

(71)**Name of Applicant :**
1)YAZAKI CORPORATION
Address of Applicant :4 28 Mita 1 chome Minato ku Tokyo 1088333 Japan
(72)**Name of Inventor :**
1)NAGAI Kentarou
2)OHTSUKA Haruhito
3)OCHIAI Ryouhei

(57) Abstract :
Provided is a low cost interior light illumination structure such that a light itself is capable of being manually operated that failure to turn off the light is prevented and that the structure is simple and is not susceptible to malfunctioning. This interior light illumination structure is equipped with a sun visor (10) which is provided in a vehicle roof section in such a way as to be rotatable between a use position and a non use position; an interior light (20) provided in the portion of the vehicle roof section that is covered by the sun visor (10) held in the non use position; and a switch (lens) (20L) which is provided in the interior light itself or in the vicinity thereof and serves to turn on and off the interior light. The switch (20L) is movable between the on position and the off position. If the sun visor (10) is held in the non use position when the switch (20L) is in the on position (inclined state) (20n) the sun visor (10) causes the switch (20L) to physically move from the on position to the off position (horizontal state) (20h).

No. of Pages : 43 No. of Claims : 3

(12) PATENT APPLICATION PUBLICATION
(19) INDIA
(22) Date of filing of Application :27/09/2012
(21) Application No.8330/CHENP/2012 A
(43) Publication Date : 21/03/2014

(54) Title of the invention : SUSPENDED CEILING SYSTEM AND FOLDABLE RUNNER THEREFORE

(51) International classification :E04B9/06
(31) Priority Document No :2698081
(32) Priority Date :30/03/2010
(33) Name of priority country :Canada
(86) International Application No :PCT/CA2011/050163
Filing Date :29/03/2011
(87) International Publication No :WO 2011/120160 A1
(61) Patent of Addition to Application Number :NA
Filing Date :NA
(62) Divisional to Application Number :NA
Filing Date :NA

(71)**Name of Applicant :**
1)CORRUVEN CANADA INC.
Address of Applicant :260 rue Notre Dame Kedgwick NB E8B 1H9 Canada
(72)**Name of Inventor :**
1)B‰LANGER Alain

(57) Abstract :
A runner a suspended ceiling system and a method of installing a suspended ceiling the runner having a base with two laterally opposite flanges for supporting ceiling tiles a hinged web connected to the base between the flanges so as to be foldable between a flat configuration with the web folded against one of the flanges and an inverted T configuration with the web normal to the base for suspension and use the hinged web allowing for economies is shipping when compared to conventional rigid inversed T shaped runners.

No. of Pages : 25 No. of Claims : 31

(12) PATENT APPLICATION PUBLICATION
(19) INDIA
(22) Date of filing of Application :27/09/2012
(21) Application No.8331/CHENP/2012 A
(43) Publication Date : 21/03/2014

(54) Title of the invention : METHOD OF REPRODUCING ABNORMAL SOUND AND JIG

(51) International classification :G01M7/02,G01M17/007
(31) Priority Document No :2010078060
(32) Priority Date :30/03/2010
(33) Name of priority country :Japan
(86) International Application No :PCT/JP2011/051258
Filing Date :25/01/2011
(87) International Publication No :WO 2011/122082
(61) Patent of Addition to Application Number :NA
Filing Date :NA
(62) Divisional to Application Number :NA
Filing Date :NA

(71)**Name of Applicant :**
1)HONDA MOTOR CO. LTD.
Address of Applicant :1 1 Minami Aoyama 2 chome Minato ku Tokyo 1078556 Japan
(72)**Name of Inventor :**
1)USUI Akihiro

(57) Abstract :
A method of reproducing abnormal noise comprises: a step of starting an engine (34) while buffer suppressing members (10 100 150 200) for suppressing the buffer function of an engine mount (36) are mounted on the engine mount (36) which buffer mounts on a vehicle body an engine (34) for driving a vehicle and a shift lever for driving is maintained in a neutral position; and a step of opening and closing the accelerator of the engine (34) while the shift lever for driving is maintained in a neutral position. In the method of reproducing abnormal noise jigs (10 100 150 200) are used.

No. of Pages : 44 No. of Claims : 10

(12) PATENT APPLICATION PUBLICATION
(19) INDIA
(22) Date of filing of Application :27/09/2012
(21) Application No.8332/CHENP/2012 A
(43) Publication Date : 21/03/2014

(54) Title of the invention : METHOD AND SYSTEM FOR OPERATING A COMPRESSION IGNITION ENGINE ON ALCOHOL CONTAINING PRIMARY FUELS

(51) International classification :F02B51/02,C10L1/02,F02M27/02
(31) Priority Document No :PA 2010 00273
(32) Priority Date :31/03/2010
(33) Name of priority country :Denmark
(86) International Application No :PCT/EP2011/001024
Filing Date :02/03/2011
(87) International Publication No :WO 2011/120618
(61) Patent of Addition to Application Number :NA
Filing Date :NA
(62) Divisional to Application Number :NA
Filing Date :NA

(71)**Name of Applicant :**
1)HALDOR TOPS˜E A/S
Address of Applicant :Nym¸llevej 55 DK 2800 Kgs. Lyngby Denmark
(72)**Name of Inventor :**
1)DUWIG Christophe
2)GABRIELSSON Pr L.
3)MIKKELSEN Svend Erik
4)JANSSENS Ton V.W.

(57) Abstract :
Method of operating a compression ignition engine on ether containing fuel obtained by on board conversion of an alcohol containing primary fuel and a system for use in the method.

No. of Pages : 17 No. of Claims : 16

(12) PATENT APPLICATION PUBLICATION
(19) INDIA
(22) Date of filing of Application :27/09/2012
(21) Application No.8333/CHENP/2012 A
(43) Publication Date : 21/03/2014

(54) Title of the invention : JOINT CONNECTOR

(51) International classification :H01R13/52,H01R31/08
(31) Priority Document No :2010076241
(32) Priority Date :29/03/2010
(33) Name of priority country :Japan
(86) International Application No :PCT/JP2011/055137
Filing Date :04/03/2011
(87) International Publication No :WO 2011/122247
(61) Patent of Addition to Application Number :NA
Filing Date :NA
(62) Divisional to Application Number :NA
Filing Date :NA

(71)**Name of Applicant :**
1)HONDA MOTOR CO. LTD.
Address of Applicant :1 1 Minami Aoyama 2 chome Minato ku Tokyo 1078556 Japan
(72)**Name of Inventor :**
1)FUNAYOSE Yusuke

(57) Abstract :
Disclosed is a joint connector (10) comprised of a first connector (16) having connection terminals (14) connected to a plurality of flexible cables (12) and a second connector (18) fitted with the first connector (16). The second connector (18) is comprised of a second housing (44) composed of a resin material a plurality of bus bars (46a to 46c) retained on the inside of the second housing (44) and a seal member (48) provided on one end of the second housing (44). The seal member (48) is provided in a recessed portion (50) provided on one end of the second housing (44) and retains the vicinity of a connection portion (56) of each bus bar (46a to 46c) having a U shaped section within the recessed portion (50).

No. of Pages : 48 No. of Claims : 7

(12) PATENT APPLICATION PUBLICATION
(19) INDIA
(22) Date of filing of Application :19/07/2012
(21) Application No.6363/CHENP/2012 A
(43) Publication Date : 21/03/2014

(54) Title of the invention : BELT DRIVEN ELEVATOR WITHOUT COUNTERWEIGHT

(51) International classification :B66B11/00,B66B11/04
(31) Priority Document No :NA
(32) Priority Date :NA
(33) Name of priority country :NA
(86) International Application No :PCT/EP2010/052775
Filing Date :04/03/2010
(87) International Publication No :WO 2011/107152 A1
(61) Patent of Addition to Application Number :NA
Filing Date :NA
(62) Divisional to Application Number :NA
Filing Date :NA

(71)**Name of Applicant :**
1)KONE CORPORATION
Address of Applicant :Kartanontie 1 FIN 00330 Helsinki Finland
(72)**Name of Inventor :**
1)HOERLER Marco

(57) Abstract :
An elevator without counterweight comprising a drive belt (3) running over a respective plurality of pulleys (4 6 8 9) wherein stationary pulleys (4 6) are associated with the frame structure of the elevator moving pulleys (8 9) are associated with the cabin of the elevator and wherein the moving pulleys are arranged in at least a first assembly fixed to the cabin and a second assembly connected to said first assembly by a tensioning device (30) of said drive belt (3).

No. of Pages : 21 No. of Claims : 13

(12) PATENT APPLICATION PUBLICATION
(19) INDIA
(22) Date of filing of Application :28/08/2012
(21) Application No.7447/CHENP/2012 A
(43) Publication Date : 21/03/2014

(54) Title of the invention : METHOD FOR COLLECTING RESIDUAL COKE FROM NON RECOVERY AND HEAT RECOVERY COKE OVENS

(51) International classification :C10B33/00,C10B45/00,C10B33/10
(31) Priority Document No :10 2010 010 988.6
(32) Priority Date :10/03/2010
(33) Name of priority country :Germany
(86) International Application No :PCT/EP2011/000634
Filing Date :10/02/2011
(87) International Publication No :WO 2011/110269
(61) Patent of Addition to Application Number :NA
Filing Date :NA
(62) Divisional to Application Number :NA
Filing Date :NA

(71)**Name of Applicant :**
1)THYSSENKRUPP UHDE GMBH
Address of Applicant :Friedrich Uhde Str. 15 44141 Dortmund Germany
(72)**Name of Inventor :**
1)BADURA Sven

(57) Abstract :
The invention relates to a method for collecting so called residual coke from a coke oven chamber while the door of the coke oven chamber is being opened wherein a collecting device is moved up against a guide plate arranged under the door of the coke oven chamber before the door of the coke oven chamber is opened and the coke that falls out of the coke oven chamber falls across the guide plate into a collecting device wherein the collecting device is moved to a horizontal position after the coke has been collected so that the upper edge of the collecting device is at the height of the bottom of the coke oven chamber and the push out device of the coke oven operating machine moves over the collecting device between the suspensions so that the coke is pushed out of the collecting device back into the coke oven chamber. Thus a loss of the residual coke is avoided and the residual coke is pushed back into the coke cake to be pushed out.

No. of Pages : 13 No. of Claims : 4

(12) PATENT APPLICATION PUBLICATION
(19) INDIA
(22) Date of filing of Application :28/09/2012
(21) Application No.8357/CHENP/2012 A
(43) Publication Date : 21/03/2014

(54) Title of the invention : RADIO COMMUNICATION APPARATUS

(51) International classification :H01Q1/24,H01Q15/14,H04M1/02
(31) Priority Document No :2010081456
(32) Priority Date :31/03/2010
(33) Name of priority country :Japan
(86) International Application No :PCT/JP2011/001281
Filing Date :04/03/2011
(87) International Publication No :WO 2011/121893
(61) Patent of Addition to Application Number :NA
Filing Date :NA
(62) Divisional to Application Number :NA
Filing Date :NA

(71)**Name of Applicant :**
1)NEC CORPORATION
Address of Applicant :7 1 Shiba 5 chome Minato ku Tokyo 1088001 Japan
(72)**Name of Inventor :**
1)SAKURAI Masanori
2)KOBAYASHI Naoki
3)ANDO Noriaki
4)TOYAO Hiroshi
5)IMAZATO Masaharu

(57) Abstract :
The disclosed wireless communication device (100) is provided with: an antenna element (40) that faces at least part of a conductive plate that a conductive surface (second casing) has or a conductive layer that a circuit board (30) has; and a plurality of conductive elements (36) that are positioned between the antenna element (40) and said conductive surface and that are repeatedly arrayed in a manner so as to intersect in the direction orthogonal to said conductive surface. The wireless communication device is for example a slide opening/closing cellular telephone and is provided with a first casing (10) a second casing (20) and a flexible circuit board (30). By means of the first casing (10) and the second casing (20) sliding against each other the wireless communication device (100) switches between the belowmentioned first state and second state. In the first state the circuit board (30) is folded over and in the second state the circuit board (30) is extended more than in the first state.

No. of Pages : 45 No. of Claims : 17

(12) PATENT APPLICATION PUBLICATION
(19) INDIA
(22) Date of filing of Application :28/09/2012
(21) Application No.8358/CHENP/2012 A
(43) Publication Date : 21/03/2014

(54) Title of the invention : CHANNEL ESTIMATION CIRCUIT CHANNEL ESTIMATION METHOD AND RECEIVER

(51) International classification :H04J11/00,H04B7/005
(31) Priority Document No :2010048938
(32) Priority Date :05/03/2010
(33) Name of priority country :Japan
(86) International Application No :PCT/JP2011/054090
Filing Date :24/02/2011
(87) International Publication No :WO 2011/108429
(61) Patent of Addition to Application Number :NA
Filing Date :NA
(62) Divisional to Application Number :NA
Filing Date :NA

(71)**Name of Applicant :**
1)NEC CORPORATION
Address of Applicant :7 1 Shiba 5 chome Minato ku Tokyo 1088001 Japan
2)NTT DOCOMO INC.
(72)**Name of Inventor :**
1)YOKOTE Toshimichi

(57) Abstract :
Disclosed is a channel estimation circuit that efficaciously removes a noise component in a time region and implements high precision channel estimation in channel estimation of a wireless communications system employing OFDM. The channel estimation circuit comprises estimation means (31 32) for deriving a channel estimation value for each subcarrier from a received signal of each subcarrier that is obtained by converting OFDM transmitted signal waves into frequency regions using known and established reference signals that are multiplexed and transmitted together with data symbols; a first conversion means (33) for converting the channel estimation value into a complex latency profile of a time region; a noise alleviation means (34) for alleviating noise by processing the complex latency profile; a second conversion means (35) for converting the complex latency profile processed by the noise alleviation means and obtaining a channel estimation value whereupon the noise is alleviated; and determination means (36 37) for determining the status of the channel that has been estimated in the estimation means (31 32). The noise alleviation means (34) mask processes a portion of the complex latency profile according to the state of the channel as determined by the determination means (36 37).

No. of Pages : 31 No. of Claims : 11

(12) PATENT APPLICATION PUBLICATION
(19) INDIA
(22) Date of filing of Application :27/09/2012
(21) Application No.8304/CHENP/2012 A
(43) Publication Date : 21/03/2014

(54) Title of the invention : SENSOR

(51) International classification :G01C19/56
(31) Priority Document No :1003539.2
(32) Priority Date :03/03/2010
(33) Name of priority country :U.K.
(86) International Application No :PCT/EP2011/053184
Filing Date :03/03/2011
(87) International Publication No :WO 2011/107542
(61) Patent of Addition to Application Number :NA
Filing Date :NA
(62) Divisional to Application Number :NA
Filing Date :NA

(71)**Name of Applicant :**
1)SILICON SENSING SYSTEMS LIMITED
Address of Applicant :Clittaford Road Southway Plymouth Devon PL6 6DE U.K.
(72)**Name of Inventor :**
1)TOWNSEND Kevin
2)DURSTON Michael
3)SITCH Douglas

(57) Abstract :
An inertial sensor is described that has a commanded test function. The sensor is of a ring type driven by a driver circuit the sensor further comprising primary and secondary portions having corresponding signal pickoffs. The primary pickoff signal amplitude is controlled via an automatic gain control the primary phase lock loop and VCO locks to the resonant frequency to provide the clocks for the synchronous detectors the primary pickoff signals via the primary phase shift circuit is provided to the primary driver the secondary pickoff signal being input into a detector circuit capable of detecting motion in the sensor. The commanded test function comprises signal derived from the primary portion of the circuit and input into the two inputs of a differential amplifier in the secondary pickoff detector circuit.

No. of Pages : 17 No. of Claims : 12

(12) PATENT APPLICATION PUBLICATION
(19) INDIA
(22) Date of filing of Application :27/09/2012
(21) Application No.8306/CHENP/2012 A
(43) Publication Date : 21/03/2014

(54) Title of the invention : CURABLE COMPOSITIONS

(51) International classification :C08G59/00,C09J163/00
(31) Priority Document No :61/319594
(32) Priority Date :31/03/2010
(33) Name of priority country :U.S.A.
(86) International Application No :PCT/US2011/000570
Filing Date :30/03/2011
(87) International Publication No :WO 2011/123173
(61) Patent of Addition to Application Number :NA
Filing Date :NA
(62) Divisional to Application Number :NA
Filing Date :NA

(71)**Name of Applicant :**
1)DOW GLOBAL TECHNOLOGIES LLC
Address of Applicant :2040 Dow Center Midland MI 48674 U.S.A.
(72)**Name of Inventor :**
1)HOEVEL Bernd
2)BARLEBEN Oliver
3)KOCH Matthias

(57) Abstract :
A curable composition comprising (A) a resin component comprising (i) an epoxy compound (ii) a diluent and (Hi) a first filler and (B) a hardener component comprising (iv) a curing agent (v) a second filler and (vi) a non reactive polyether block copolymer additive. The resin component and hardener component each having a viscosity of no greater than 30 Pascal second under an applied shear of 10 reciprocal seconds at 25 degrees Celsius and the curable composition after 120 seconds of mixing the resin component and hardener component together under an applied shear of 10 reciprocal seconds has a viscosity of at least 100 Pascal second at 25 degrees Celsius.

No. of Pages : 25 No. of Claims : 12

(12) PATENT APPLICATION PUBLICATION
(19) INDIA
(22) Date of filing of Application :27/09/2012
(21) Application No.8307/CHENP/2012 A
(43) Publication Date : 21/03/2014

(54) Title of the invention : CURABLE COMPOSITION

(51) International classification :C08L101/10,C08K7/22,C08K5/1515
(31) Priority Document No :2010045315
(32) Priority Date :02/03/2010
(33) Name of priority country :Japan
(86) International Application No :PCT/JP2011/053952
Filing Date :23/02/2011
(87) International Publication No :WO 2011/108415
(61) Patent of Addition to Application Number :NA
Filing Date :NA
(62) Divisional to Application Number :NA
Filing Date :NA

(71)**Name of Applicant :**
1)Sunstar Giken Kabushiki Kaisha
Address of Applicant :3 1 Asahi machi Takatsuki shi Osaka 5691134 Japan
(72)**Name of Inventor :**
1)TORII Tomoyuki
2)YAMADA Kohei
3)NAKAYAMA Yoshimitsu
4)ITO Masahiro

(57) Abstract :
Disclosed is a curable composition comprising a linear hydrolyzable silyl group-containing polymer and a branched hydrolyzable silyl group-containing polymer in the weight ratio of 1:9 to 9:1 and having a specific weight of less than 1.15.

No. of Pages : 43 No. of Claims : 13

(12) PATENT APPLICATION PUBLICATION
(19) INDIA
(22) Date of filing of Application :27/09/2012
(21) Application No.8308/CHENP/2012 A
(43) Publication Date : 21/03/2014

(54) Title of the invention : ANGULAR VELOCITY CONTROL FOR HYBRID VEHICLE PRIME MOVERS

(51) International classification :B60W10/18
(31) Priority Document No :NA
(32) Priority Date :NA
(33) Name of priority country :NA
(86) International Application No :PCT/US2010/026064
Filing Date :03/03/2010
(87) International Publication No :WO 2011/109018
(61) Patent of Addition to Application Number :NA
Filing Date :NA
(62) Divisional to Application Number :NA
Filing Date :NA

(71)**Name of Applicant :**
1)INTERNATIONAL TRUCK INTELLECTUAL PROPERTY COMPANY LLC
Address of Applicant :4201 Winfield Road Legal Dept. Warrenville Illinois 60555 U.S.A.
(72)**Name of Inventor :**
1)BISSONTZ Jay

(57) Abstract :
An hybrid vehicle control system controls the output from one of two prime movers installed on the vehicle by reference to available angular acceleration rates for the first and second prime movers. When angular acceleration is called for and the prime mover having greater capacity for angular acceleration is active acceleration is limited to that which would have been available from the lower capacity prime mover. One application of the system is to provide consistent throttle responsiveness particularly for a power take off operation vocation installed on the vehicle.

No. of Pages : 21 No. of Claims : 11

(12) PATENT APPLICATION PUBLICATION
(19) INDIA
(22) Date of filing of Application :27/09/2012
(21) Application No.8309/CHENP/2012 A
(43) Publication Date : 21/03/2014

(54) Title of the invention : BLOCK COPOLYMERS AND THEIR USE

(51) International classification :A61K8/00,A61K8/72,A61Q5/02
(31) Priority Document No :10155218.0
(32) Priority Date :02/03/2010
(33) Name of priority country :EPO
(86) International Application No :PCT/EP2011/053000
Filing Date :01/03/2011
(87) International Publication No:WO 2011/107460
(61) Patent of Addition to Application Number :NA
Filing Date :NA
(62) Divisional to Application Number :NA
Filing Date :NA

(71)**Name of Applicant :**
1)BASF SE
Address of Applicant :67056 Ludwigshafen Germany
(72)**Name of Inventor :**
1)NGUYEN KIM Son
2)JAHNEL Wolfgang

(57) Abstract :
The present invention relates to a process for the preparation of a crosslinked copolymer with anionogenic/anionic groups by free-radical copolymerization by the method of precipitation polymerization, to the copolymers obtained by this process and to their use.

No. of Pages : 106 No. of Claims : 34

(12) PATENT APPLICATION PUBLICATION
(19) INDIA
(22) Date of filing of Application :27/09/2012
(21) Application No.8311/CHENP/2012 A
(43) Publication Date : 21/03/2014

(54) Title of the invention : RADIO COMMUNICATION APPARATUS AND CURRENT REDUCING METHOD

(51) International classification :H01Q1/50,H01Q1/24,H04M1/02
(31) Priority Document No :2010-081440
(32) Priority Date :31/03/2010
(33) Name of priority country :Japan
(86) International Application No :PCT/JP2011/001760
Filing Date :25/03/2011
(87) International Publication No :WO 2011/121956
(61) Patent of Addition to Application Number :NA
Filing Date :NA
(62) Divisional to Application Number :NA
Filing Date :NA

(71)**Name of Applicant :**
1)NEC CORPORATION
Address of Applicant :7 1 Shiba 5 chome Minato ku Tokyo 1088001 Japan
(72)**Name of Inventor :**
1)SAKURAI Masanori
2)KOBAYASHI Naoki
3)ANDO Noriaki
4)TOYAO Hiroshi
5)IMAZATO Masaharu

(57) Abstract :
The disclosed wireless communication device is provided with a first casing a second casing a connecting section that movably connects the first casing and second casing together and an antenna element that operates at a predetermined communication frequency. By means of the first casing and the second casing moving relative to each other the wireless communication device switches between the belowmentioned first state and second state. The first state is when the first casing and the second casing are open or closed relative to each other and a first conductor (122) provided from the connecting section to the first casing and a second conductor (240) provided from the connecting section to the second casing face each other leaving a gap therebetween. In the first state the first conductor (122) and the second conductor (240) are electrically connected in the communication frequency. The second state is when the first casing and the second casing are closed or open.

No. of Pages : 115 No. of Claims : 25

(12) PATENT APPLICATION PUBLICATION
(19) INDIA
(22) Date of filing of Application :09/08/2012
(21) Application No.6990/CHENP/2012 A
(43) Publication Date : 21/03/2014

(54) Title of the invention : METHOD FOR APPLYING NANOPARTICLES

(51) International classification	:B44C5/04,B32B27/04,D21H17/67
(31) Priority Document No	:10500957
(32) Priority Date	:29/01/2010
(33) Name of priority country	:Sweden
(86) International Application No	:PCT/SE2011/050092
Filing Date	:28/01/2011
(87) International Publication No	:WO 2011/093785
(61) Patent of Addition to Application Number	:NA
Filing Date	:NA
(62) Divisional to Application Number	:NA
Filing Date	:NA

(71)**Name of Applicant :**
1)V„LINGE PHOTOCATALYTIC AB
Address of Applicant :Prstavgen 513 S 263 65 Viken Sweden
(72)**Name of Inventor :**
1)ZIEGLER Gran
2)JENSEN Henrik
3)REENBERG Theis

(57) Abstract :
A method of producing a sheet comprising the photocatalytic nanoparticles by applying the particles in a freshly impregnated and wet surface.

No. of Pages : 19 No. of Claims : 18

(12) PATENT APPLICATION PUBLICATION
(19) INDIA
(22) Date of filing of Application :16/08/2012
(21) Application No.7151/CHENP/2012 A
(43) Publication Date : 21/03/2014

(54) Title of the invention : LIQUID CRYSTAL DISPLAY PANEL AND LIQUID CRYSTAL DISPLAY DEVICE

(51) International classification :G02F1/1343,G02F1/1368
(31) Priority Document No :2010039292
(32) Priority Date :24/02/2010
(33) Name of priority country :Japan
(86) International Application No :PCT/JP2010/070732
Filing Date :19/11/2010
(87) International Publication No :WO 2011/104956
(61) Patent of Addition to Application Number :NA
Filing Date :NA
(62) Divisional to Application Number :NA
Filing Date :NA

(71)**Name of Applicant :**
1)SHARP KABUSHIKI KAISHA
Address of Applicant :22 22 Nagaike cho Abeno ku Osaka shi Osaka 5458522 Japan
(72)**Name of Inventor :**
1)HISADA Yuhko
2)YAMADA Takaharu
3)HORIUCHI Satoshi
4)ITOH Ryohki

(57) Abstract :
At least a portion of the protruding section (4a) of a sub pixel electrode (4) is formed so as to overlap with a contact hole (17) in planar view. Therefore it is possible to obtain a liquid crystal display panel that has a high quality display a high aperture ratio and a high transmittance.

No. of Pages : 75 No. of Claims : 11

(12) PATENT APPLICATION PUBLICATION
(19) INDIA
(22) Date of filing of Application :23/08/2012
(21) Application No.7319/CHENP/2012 A
(43) Publication Date : 21/03/2014

(54) Title of the invention : SYSTEM DEVICE AND METHOD FOR EXCHANGING ENERGY WITH AN ELECTRIC VEHICLE

(51) International classification :B60L11/18
(31) Priority Document No :2004279
(32) Priority Date :22/02/2010
(33) Name of priority country :Netherlands
(86) International Application No :PCT/NL2011/050122
Filing Date :22/02/2011
(87) International Publication No :WO 2011/102727
(61) Patent of Addition to Application Number :NA
Filing Date :NA
(62) Divisional to Application Number :NA
Filing Date :NA

(71)**Name of Applicant :**
1)ABB B.V.
Address of Applicant :George Hintzenweg 81 NL 3068 AX Rotterdam Netherlands
(72)**Name of Inventor :**
1)BOUMAN Crijn

(57) Abstract :
The invention relates to a system for exchanging energy with an electric vehicle in particular with a battery thereof comprising at least one energy exchange station comprising at least one port for exchanging energy with an energy source at least one port for exchanging energy with a vehicle at least one port for data communication with the vehicle at least one port for data communication with a data processing device a data processing device comprising at least one port for data communication with the energy exchange station at least one port for data communication with at least one configuration device at least one configuration device comprising at least one port for exchanging data with the data processing device; and means such as a user interface for editing configuration details. The invention further relates to a method and devices for exchanging energy with an electric vehicle.

No. of Pages : 39 No. of Claims : 25

(12) PATENT APPLICATION PUBLICATION
(19) INDIA
(22) Date of filing of Application :23/08/2012
(21) Application No.7323/CHENP/2012 A
(43) Publication Date : 21/03/2014

(54) Title of the invention : SELF CONTAINED BIOLOGICAL ASSAY APPARATUS METHODS AND APPLICATIONS

(51) International classification :G01N35/10,G01N33/50
(31) Priority Document No :61/307186
(32) Priority Date :23/02/2010
(33) Name of priority country :U.S.A.
(86) International Application No :PCT/US2011/025712
Filing Date :22/02/2011
(87) International Publication No :WO 2011/106315
(61) Patent of Addition to Application Number :NA
Filing Date :NA
(62) Divisional to Application Number :NA
Filing Date :NA

(71)**Name of Applicant :**
1)RHEONIX INC.
Address of Applicant :22 Thornwood Drive Ithaca New York 14850 U.S.A.
(72)**Name of Inventor :**
1)ZHOU Peng
2)YOUNG Lincoln
3)THOMAS Benjamin
4)CHEN Zongyuan
5)MOUCHKA Greg
6)ROSWECH Todd
7)SPIZZ Gwendolyn
8)YASMIN Rubina

(57) Abstract :
A self contained fully automated biological assay performing apparatus includes a housing; a dispensing platform including a controllably movable reagent dispensing system disposed in the housing; a reagent supply component disposed in the housing; a pneumatic manifold removably disposed in the housing in a space shared by the dispensing platform removably coupled to a fluidic transport layer and a plurality of reservoirs wherein the fluidic transport layer the reservoirs and a test sample to be introduced therein are disposed in the housing in the space separate from the dispensing platform; a pneumatic supply system removably coupled to the pneumatic manifold in the housing in a space separate from the dispensing platform; and a control system coupled to at least one of the dispensing platform and the pneumatic supply system disposed in the housing.

No. of Pages : 201 No. of Claims : 39

(12) PATENT APPLICATION PUBLICATION
(19) INDIA
(22) Date of filing of Application :28/09/2012
(21) Application No.8355/CHENP/2012 A
(43) Publication Date : 21/03/2014

(54) Title of the invention : SHIP ENCOUNTERING LESS FRICTIONAL RESISTANCE

(51) International classification :B63B1/38,B63H5/07
(31) Priority Document No :2010085479
(32) Priority Date :01/04/2010
(33) Name of priority country :Japan
(86) International Application No :PCT/JP2011/051906
Filing Date :31/01/2011
(87) International Publication No :WO 2011/125365
(61) Patent of Addition to Application Number :NA
Filing Date :NA
(62) Divisional to Application Number :NA
Filing Date :NA

(71)**Name of Applicant :**
1)MITSUBISHI HEAVY INDUSTRIES LTD.
Address of Applicant :16 5 Konan 2 Chome Minato ku Tokyo 1088215 Japan
(72)**Name of Inventor :**
1)KAWAKITA Chiharu
2)KODAN Yoichiro
3)TAKANO Shinichi

(57) Abstract :
Provided is a ship encountering less frictional resistance. The ship blows air into the water to reduce the frictional resistance between the hull of the ship and the water and prevents bubbles from being entrained in a propeller (16) of the ship while the strength of the hull is maintained. An air blowing device (30) blows air into the water through air blow ports (31 33) formed in a ship bottom (13). An air collection device (40) collects air in the hull through first to third air collection ports (41 43). The propeller (16) is disposed on the centerline (CL) of the ship. The first air collection port (41) is formed across the centerline (CL). The second air collection port (42) is formed on the port side of the centerline (CL) so that the second air collection port (42) protrudes further to the port side than the first air collection port (41). The third air collection port (43) is formed on the starboard side of the centerline (CL) so that the third air collection port (43) protrudes further to the starboard side than the first air collection port (41). The second and third air collection ports (42 43) are closer to the bow side of the ship than the first air collection port (41). Each of the first to third air collection ports (41 43) comprises a plurality of air collection holes (41a 43a).

No. of Pages : 38 No. of Claims : 10

(12) PATENT APPLICATION PUBLICATION
(19) INDIA
(22) Date of filing of Application :08/06/2012
(21) Application No.2291/CHE/2012 A
(43) Publication Date : 21/03/2014

(54) Title of the invention : OBSERVATION OF VENUS ECLIPSE BY R. VELMURUGAN

(51) International classification :G01V
(31) Priority Document No :NA
(32) Priority Date :NA
(33) Name of priority country :NA
(86) International Application No :NA
Filing Date :NA
(87) International Publication No : NA
(61) Patent of Addition to Application Number :NA
Filing Date :NA
(62) Divisional to Application Number :NA
Filing Date :NA

(71)**Name of Applicant :**
1)R. VELMURUGAN
Address of Applicant :146/5 NORTH STREET, SENGAMEDU (VILLAGE), AVINANGUDI (POST) TITTAGUDI (TK), CUDDALORE (DT), PIN - 606 112 Tamil Nadu India
(72)**Name of Inventor :**
1)R. VELMURUGAN

(57) Abstract :
On 06.06.12 I(R.Velmurugan M.Sc,M.Ed,M.Phil) had moment to observe Venus eclipse ie Venus came in between Earth and sun such a to produce Venus s shadow on sun. I observed above event through black smoke deposit on a rectangular plane mirror inclined towards sun. Above written fact induce me to investigate about nature of venus.

No. of Pages : 5 No. of Claims : 4

(12) PATENT APPLICATION PUBLICATION
(19) INDIA
(22) Date of filing of Application :03/08/2012
(21) Application No.6841/CHENP/2012 A
(43) Publication Date : 21/03/2014

(54) Title of the invention : METHOD AND DEVICE FOR CONTROLLING USER EQUIPMENT TO MEASURE NON ACTIVATED DOWNLINK COMPONENT CARRIERS

(51) International classification :H04W24/00,H04B17/00
(31) Priority Document No :NA
(32) Priority Date :NA
(33) Name of priority country :NA
(86) International Application No :PCT/CN2010/070068
Filing Date :08/01/2010
(87) International Publication No :WO 2011/082530
(61) Patent of Addition to Application Number :NA
Filing Date :NA
(62) Divisional to Application Number :NA
Filing Date :NA

(71)**Name of Applicant :**
1)ALCATEL LUCENT
Address of Applicant :54 Rue La Botie F 75008 Paris France
(72)**Name of Inventor :**
1)YANG Tao
2)LIM Seau Sian

(57) Abstract :
The present invention provides a method and device for a user equipment (UE) to decide by itself to measure non activated downlink component carriers and a method and device for a base station to control a UE to measure non activated downlink component carriers. The present invention also provides a method and device for a UE to request to send a sounding reference signal and a method and device for a base station to control a UE to send a sounding reference signal. The aforementioned user equipment and base station are both in the wireless communication system based on carrier aggregation. The technical solution of the present invention can achieve the trade off between the low power consumption of the user equipment and the fast accurate response to the component carriers.

No. of Pages : 40 No. of Claims : 15

(12) PATENT APPLICATION PUBLICATION
(19) INDIA
(22) Date of filing of Application :23/08/2012
(21) Application No.7333/CHENP/2012 A
(43) Publication Date : 21/03/2014

(54) Title of the invention : VIRTUAL MACHINE IMAGE UPDATE SERVICE

(51) International classification :G06F9/44,G06F15/16
(31) Priority Document No :12/724010
(32) Priority Date :15/03/2010
(33) Name of priority country :U.S.A.
(86) International Application No :PCT/US2011/028156
Filing Date :11/03/2011
(87) International Publication No :WO 2011/115842
(61) Patent of Addition to Application Number :NA
Filing Date :NA
(62) Divisional to Application Number :NA
Filing Date :NA

(71)**Name of Applicant :**
1)MICROSOFT CORPORATION
Address of Applicant :One Microsoft Way Redmond Washington 98052 6399 U.S.A.
(72)**Name of Inventor :**
1)KHALIDI Yousef A.
2)HAVENS Jeffrey Lee

(57) Abstract :
Systems methods and computer readable media for updating a component utilized by an application within a distributed computing environment. An inventory of components relied on by applications within a distributed computing environment is created and maintained to facilitate identifying applications utilizing a particular component. A determination is made from the inventory of applications that utilize the particular component. An indication is received that an update is available for the particular component. An application image for an application utilizing the particular component is booted in an isolated computing environment to allow the component to be updated. A new image of the application is created to reflect the updated component. A user such as a developer of the application may be notified that the new image is available for future instantiations of the application.

No. of Pages : 32 No. of Claims : 15

(12) PATENT APPLICATION PUBLICATION
(19) INDIA
(22) Date of filing of Application :28/09/2012
(21) Application No.8381/CHENP/2012 A
(43) Publication Date : 21/03/2014

(54) Title of the invention : PHOTOCHROMIC CURABLE COMPOSITION

(51) International classification :C09K9/02,C08F2/44,G02B5/23
(31) Priority Document No :2010085223
(32) Priority Date :01/04/2010
(33) Name of priority country :Japan
(86) International Application No :PCT/JP2011/058470
Filing Date :28/03/2011
(87) International Publication No :WO 2011/125956 A1
(61) Patent of Addition to Application Number :NA
Filing Date :NA
(62) Divisional to Application Number :NA
Filing Date :NA

(71)**Name of Applicant :**
1)TOKUYAMA CORPORATION
Address of Applicant :1 1 Mikage cho Shunan shi YAMAGUCHI 7450053 Japan
(72)**Name of Inventor :**
1)TAKENAKA Junji
2)MOMODA Junji

(57) Abstract :
A photochromic curable composition which comprises 100 parts by mass of a polymerizable monomer composition that comprises 70 to 100% by mass of a polymerizable monomer having 2 to 4 (meth)acrylic groups and 0 to 30% by mass of a polymerizable monomer having one (meth)acrylic group and 0.01 to 20 parts by mass of a photochromic compound and in which the methacrylic group content by mole of the polymerizable monomer composition is three to seven times the acrylic group content by mole thereof. A lens having a photochromic coating formed from the photochromic curable composition exhibits excellent photochromic characteristics enables the formation of a hard coat layer having sufficient tight adhesion and scratch resistance and causes no delay in fading. Further the photochromic curable composition exhibits excellent storage stability.

No. of Pages : 67 No. of Claims : 5

(12) PATENT APPLICATION PUBLICATION
(19) INDIA
(22) Date of filing of Application :28/09/2012
(21) Application No.8382/CHENP/2012 A
(43) Publication Date : 21/03/2014

(54) Title of the invention : DEVICE AND METHOD FOR CONTROLLING ELECTRIC VEHICLE

(51) International classification :B60L7/24,B60K6/442,B60T7/12
(31) Priority Document No :2010112955
(32) Priority Date :17/05/2010
(33) Name of priority country :Japan
(86) International Application No :PCT/JP2011/060139
Filing Date :26/04/2011
(87) International Publication No :WO 2011/145441 A1
(61) Patent of Addition to Application Number :NA
Filing Date :NA
(62) Divisional to Application Number :NA
Filing Date :NA

(71)**Name of Applicant :**
1)HONDA MOTOR CO. LTD.
Address of Applicant :1 1 Minami Aoyama 2 chome Minato ku Tokyo 1078556 Japan
(72)**Name of Inventor :**
1)MATSUSHITA Masanori
2)FUJISHIRO Naoki
3)SAITO Osamu
4)KOBORI Hidetoshi
5)MATSUSHITA Satoshi

(57) Abstract :
If the temperature (Tig) of a switching element (25) in a source power supply circuit (24) of an electric motor (2) increases to be equal to or greater than a first predetermined value (a) while an electric vehicle (1) is in a stalled state torque commands for the electric motor (2) are reduced while braking force commands for a braking means (10) are increased and if the temperature (Tig) of the switching element (25) subsequently decreases to be equal to or less than a second predetermined value ((<a)) the braking force commands for the braking means (10) are decreased while the torque commands for the electric motor (2) are increased. The rate of increase in the torque commands for the electric motor (2) is varied in accordance with the degree of slope in the road surface.

No. of Pages : 52 No. of Claims : 5

(12) PATENT APPLICATION PUBLICATION
(19) INDIA
(22) Date of filing of Application :28/09/2012
(21) Application No.8360/CHENP/2012 A
(43) Publication Date : 21/03/2014

(54) Title of the invention : OPTICAL FIBER OPTICAL FIBER RIBBON AND OPTICAL FIBER CABLE

(51) International classification :C03C25/24,G02B6/44
(31) Priority Document No :2010165041
(32) Priority Date :22/07/2010
(33) Name of priority country :Japan
(86) International Application No :PCT/JP2011/061047
Filing Date :13/05/2011
(87) International Publication No :WO 2012/011311
(61) Patent of Addition to Application Number :NA
Filing Date :NA
(62) Divisional to Application Number :NA
Filing Date :NA

(71)**Name of Applicant :**
1)FURUKAWA ELECTRIC CO. LTD.
Address of Applicant :2 3 Marunouchi 2chome Chiyoda ku Tokyo 1008322 Japan
(72)**Name of Inventor :**
1)KASAHARA Minoru
2)SAITO Minoru
3)NAKAJIMA Yasuo
4)TANAKA Hiroki

(57) Abstract :
Disclosed are a bare optical fiber optical fiber tape core and optical fiber cable whereby both increases in transmission losses and decreases in intensity are reduced. Said bare optical fiber comprises an optical fiber with a primary cladding layer covering the outer surface thereof and is characterized in that said primary cladding layer contains a UV curable resin which contains by mass 0.05 0.75 parts of a reactive silane coupling agent and 0.05 0.75 parts of a non reactive silane coupling agent.

No. of Pages : 31 No. of Claims : 5

(12) PATENT APPLICATION PUBLICATION
(19) INDIA
(22) Date of filing of Application :28/09/2012
(21) Application No.8362/CHENP/2012 A
(43) Publication Date : 21/03/2014

(54) Title of the invention : DEVICE AND METHOD FOR THERMALLY PRE TREATING SOLID RAW MATERIALS IN A CONCENTRICALLY STEPPED FLUIDIZED BED

(51) International classification :B01J8/24,B01J8/26
(31) Priority Document No :10 2010 018 219.2
(32) Priority Date :23/04/2010
(33) Name of priority country :Germany
(86) International Application No :PCT/EP2011/001627
Filing Date :31/03/2011
(87) International Publication No :WO 2011/131287
(61) Patent of Addition to Application Number :NA
Filing Date :NA
(62) Divisional to Application Number :NA
Filing Date :NA

(71)**Name of Applicant :**
1)ThyssenKrupp Uhde GmbH
Address of Applicant :Friedrich Uhde Strae 15 44141 Dortmund Germany
(72)**Name of Inventor :**
1)ABRAHAM Ralf
2)HAMEL Stefan

(57) Abstract :
The invention relates to a fluidized bed reactor for thermally pre treating solid raw materials containing water with devices for receiving a stepped stationary fluidized bed comprising at least two concentrically arranged treatment zones. Each treatment zone has at least one separate gas inlet for fluidizing gas and the individual treatment zones are only connected to each other by overflows. The outermost treatment zone has a feeding device for raw material. Each treatment zone is divided from the respective other adjacent treatment zone by an overflow weir and the innermost treatment zone has an outlet for reaction products. The solid raw material is fed into the outermost treatment zone of the fluidized bed said fluidized bed being loosened and fluidized with fluidizing gas. A first temperature and a first residence time are set in a first step of the fluidized bed and a second temperature and a second residence time are set in a second step of the fluidized bed. The temperatures of the fluidizing gas of the first step and the second step are controlled separately. The fluidized material flows out of the outer treatment zone over the overflow weir into the inner treatment zone and the fluidized material is drawn off from the floor of the innermost treatment zone with the product.

No. of Pages : 15 No. of Claims : 7

(12) PATENT APPLICATION PUBLICATION
(19) INDIA
(22) Date of filing of Application :28/09/2012
(21) Application No.8363/CHENP/2012 A
(43) Publication Date : 21/03/2014

(54) Title of the invention : METHOD FOR PRODUCING POLYURETHANE HARD FOAM MATERIALS

(51) International classification :C08G18/50,C08G65/26
(31) Priority Document No :10155211.5
(32) Priority Date :02/03/2010
(33) Name of priority country :EPO
(86) International Application No :PCT/EP2011/052619
Filing Date :22/02/2011
(87) International Publication No :WO 2011/107374
(61) Patent of Addition to Application Number :NA
Filing Date :NA
(62) Divisional to Application Number :NA
Filing Date :NA

(71)**Name of Applicant :**
1)BASF SE
Address of Applicant :67056 Ludwigshafen Germany
(72)**Name of Inventor :**
1)ELING Berend
2)SCHTTE Markus
3)ZARBAKHSH Sirus
4)SEIFERT Holger
5)KAMPF Gunnar

(57) Abstract :
The invention relates to a method for producing polyurethane hard foam materials by reacting a) polyisocyanates with b) compounds having at least two hydrogen atoms reactive with two isocyanate groups in the presence of c) foaming agents characterized in that the compounds having at least two hydrogen atoms reactive with two isocyanate groups comprise at least one polyether alcohol b1) having a functionality of 2 8 and a hydroxyl number of 200 800 mg KOH/g said alcohol having been produced by building up alkylene oxides b1b) on compounds having at least two hydrogen atoms reactive with alkylene oxides b1a) referred to below as starting substances using an amine b1c) as a catalyst.

No. of Pages : 23 No. of Claims : 15

(12) PATENT APPLICATION PUBLICATION
(19) INDIA
(22) Date of filing of Application :28/09/2012
(21) Application No.8365/CHENP/2012 A
(43) Publication Date : 21/03/2014

(54) Title of the invention : BACK LIGHT ASSEMBLY RELAY CONNECTOR AND BACK LIGHT UNIT

(51) International classification :F21S2/00,F21V23/00,F21V23/06
(31) Priority Document No :2010087119
(32) Priority Date :05/04/2010
(33) Name of priority country :Japan
(86) International Application No :PCT/JP2011/058199
Filing Date :31/03/2011
(87) International Publication No :WO 2011/125830
(61) Patent of Addition to Application Number :NA
Filing Date :NA
(62) Divisional to Application Number :NA
Filing Date :NA

(71)**Name of Applicant :**
1)JAPAN AVIATION ELECTRONICS INDUSTRY LIMITED
Address of Applicant :21 2 Dogenzaka 1 chome Shibuya ku Tokyo 1500043 Japan
(72)**Name of Inventor :**
1)NAITO Takeharu

(57) Abstract :
Provided is a back light assembly wherein the reduction of cost is easier than ever before. A back light assembly (1) has light emitting element substrates (23a to 23f) to which light emitting elements (31) are attached said light emitting element substrates being provided on a frame (3b) around the top face (surface) of a chassis (3); a power source substrate (51) which is provided on the underside surface of the chassis (3) to supply power to the light emitting element substrates (23a to 23f); and a relay connector (21) which is retained by the chassis (3) and which electrically connects the power source substrate (51) to the light emitting element substrates (23a to 23f).

No. of Pages : 67 No. of Claims : 13

(12) PATENT APPLICATION PUBLICATION
(19) INDIA
(22) Date of filing of Application :27/09/2012
(21) Application No.8316/CHENP/2012 A
(43) Publication Date : 21/03/2014

(54) Title of the invention : METHOD FOR PRODUCING POLYURETHANES

(51) International classification :C08G18/50,C08G65/26
(31) Priority Document No :10155201.6
(32) Priority Date :02/03/2010
(33) Name of priority country :EPO
(86) International Application No :PCT/EP2011/052555
Filing Date :22/02/2011
(87) International Publication No :WO 2011/107366
(61) Patent of Addition to Application Number :NA
Filing Date :NA
(62) Divisional to Application Number :NA
Filing Date :NA

(71)**Name of Applicant :**
1)BASF SE
Address of Applicant :67056 Ludwigshafen Germany
(72)**Name of Inventor :**
1)ELING Berend
2)SCHTTE Markus
3)ZARBAKHSH Sirus

(57) Abstract :
Method for producing polyurethanes Abstract The invention relates to a process for preparing polyurethanes, which comprises reacting a) polyisocyanates with b) compounds having at least two hydrogen atoms reactive with isocyanate groups, wherein said compounds having at least two hydrogen atoms reactive with isocyanate groups b) comprise at least one polyether alcohol b1) having a functionality of 2-8 and a hydroxyl number of 200-600 mgKOH/g, obtained by addition of an alkylene oxide bib) onto a compound having at least two hydrogen atoms reactive with alkylene oxides by using an amine b1c) as catalyst.

No. of Pages : 18 No. of Claims : 19

(12) PATENT APPLICATION PUBLICATION
(19) INDIA
(22) Date of filing of Application :27/09/2012
(21) Application No.8318/CHENP/2012 A
(43) Publication Date : 21/03/2014

(54) Title of the invention : IMAGE DISPLAY SYSTEM CAPABLE OF AUTOMATIC 2D/3D SWITCHING

(51) International classification :H04N13/04,G02B27/22,G02C7/10
(31) Priority Document No :2010064206
(32) Priority Date :19/03/2010
(33) Name of priority country :Japan
(86) International Application No :PCT/JP2011/055925
Filing Date :14/03/2011
(87) International Publication No :WO 2011/115047
(61) Patent of Addition to Application Number :NA
Filing Date :NA
(62) Divisional to Application Number :NA
Filing Date :NA

(71)**Name of Applicant :**
1)Sharp Kabushiki Kaisha
Address of Applicant :22 22 Nagaike cho Abeno ku Osaka Shi Osaka 5458522 Japan
(72)**Name of Inventor :**
1)MAEDA Shingo
2)OMIYA Yuki

(57) Abstract :
In a 3D television viewed using 3D viewing glasses, a 3D image and a non-3D image can be automatically switched. A 3D image can be displayed when the viewer removes 3D viewing glasses from a special seat, when an image sensor equipped on 3D viewing glasses worn by the viewer detects a motion o n the television screen, wh en a television s et is eq uipped with a camera and determines from an image of the camera that the viewer wears 3D viewing glasses, or when the viewer opens the arms of 3D viewing glasses to wear the glasses.

No. of Pages : 37 No. of Claims : 5

(12) PATENT APPLICATION PUBLICATION
(19) INDIA
(22) Date of filing of Application :27/09/2012
(21) Application No.8319/CHENP/2012 A
(43) Publication Date : 21/03/2014

(54) Title of the invention : METHOD AND APPARATUS FOR DETACHMENT FROM A WIRELESS COMMUNICATION NETWORK

(51) International classification :H04W60/06
(31) Priority Document No :61/325758
(32) Priority Date :19/04/2010
(33) Name of priority country :U.S.A.
(86) International Application No :PCT/US2011/033103
Filing Date :19/04/2011
(87) International Publication No :WO 2011/133585
(61) Patent of Addition to Application Number :NA
Filing Date :NA
(62) Divisional to Application Number :NA
Filing Date :NA

(71)**Name of Applicant :**
1)QUALCOMM INCORPORATED
Address of Applicant :Attn: International Ip Administration 5775 Morehouse Drive San Diego CA 92121 U.S.A.
(72)**Name of Inventor :**
1)GIARETTA Gerardo
2)STUPAR Patrick

(57) Abstract :
Techniques are provided for efficient detachment from or attachment to wireless network(s). In one example there is provided a method operable by the user equipment (UE) that may involve connecting to a first wireless network (e.g. a 3GPP network) associated with a first access point name (APN) and connecting to a second wireless network (e.g. a WAN) associated with a second APN. The method may involve performing handover for the first APN from the first wireless network to the second wireless network. The method may involve performing detach for the first APN from the second wireless network.

No. of Pages : 70 No. of Claims : 116

(12) PATENT APPLICATION PUBLICATION
(19) INDIA
(22) Date of filing of Application :28/09/2012
(21) Application No.8356/CHENP/2012 A
(43) Publication Date : 21/03/2014

(54) Title of the invention : WIRE FEEDING DEVICE

(51) International classification :B23K9/10,B23K9/00,B23K9/095
(31) Priority Document No :2010241630
(32) Priority Date :28/10/2010
(33) Name of priority country :Japan
(86) International Application No :PCT/JP2011/005755
Filing Date :14/10/2011
(87) International Publication No :WO 2012/056640
(61) Patent of Addition to Application Number :NA
Filing Date :NA
(62) Divisional to Application Number :NA
Filing Date :NA

(71)**Name of Applicant :**
1)PANASONIC CORPORATION
Address of Applicant :1006 Oaza Kadoma Kadoma shi Osaka 5718501 Japan
(72)**Name of Inventor :**
1)HONGU Toshinori
2)YONEMORI Shigeki

(57) Abstract :
A wire feeding device (18) is configured as follow. When power is supplied to an electromagnetic valve (2) of the wire feeding device (18) from an arc welding power supply device (19) and the electromagnetic valve (2) is driven a sequence control unit (7) provided in the wire feeding device (18) and controlling a self holding operation is also supplied with the power and operates. In addition a first path and a second path are provided in parallel with each other the first path being used for directly outputting the start up signal (TS) of a start up switch (1) to the arc welding power supply device (19) the second path being used for inputting the start up signal (TS) of the start up switch (1) to the sequence control unit (7) and outputting the start up signal output from the sequence control unit (7) to the arc welding power supply device (19).

No. of Pages : 40 No. of Claims : 6

(12) PATENT APPLICATION PUBLICATION
(19) INDIA
(22) Date of filing of Application :24/08/2012
(21) Application No.7367/CHENP/2012 A
(43) Publication Date : 21/03/2014

(54) Title of the invention : PULLEY WITH ASYMMETRIC TORQUE SENSITIVE CLUTCHING

(51) International classification :F16D41/22
(31) Priority Document No :12/713,580
(32) Priority Date :26/02/2010
(33) Name of priority country :U.S.A.
(86) International Application No :PCT/US2011/023541
Filing Date :03/02/2011
(87) International Publication No :WO 2011/106136
(61) Patent of Addition to Application Number :NA
Filing Date :NA
(62) Divisional to Application Number :NA
Filing Date :NA

(71)**Name of Applicant :**
1)DAYCO PRODUCTS LLC
Address of Applicant :4500 South Garnett Road Suite 500 Tulsa OK 74146 U.S.A.
(72)**Name of Inventor :**
1)LANNUTTI Anthony E.
2)DUTIL Kevin

(57) Abstract :
A pulley assembly for use in an automobile accessory drive system includes a shaft engaging hub a pulley member a nut treaded onto the shaft engaging hub and a brake member interposed between the pulley member and the nut. The shaft engaging hub is engaged with an accessory input shaft for rotation therewith. Frictional engagement between the pulley member the brake member and the nut transfers torque from the pulley member to the input shaft. The pulley member includes an inner coupling surface and a peripheral belt engaging surface. The nut includes an outer coupling surface. The brake member includes a first coupling surface in frictional engagement the outer coupling surface of the nut and a second coupling surface in frictional engagement with the inner coupling surface of the pulley member.

No. of Pages : 20 No. of Claims : 24

(12) PATENT APPLICATION PUBLICATION
(19) INDIA
(22) Date of filing of Application :30/08/2012
(21) Application No.7512/CHENP/2012 A
(43) Publication Date : 21/03/2014

(54) Title of the invention : COOPERATIVE OPERATION DEVICE, COOPERATIVE OPERATION METHOD, COOPERATIVE OPERATION CONTROL PROGRAM, AND DEVICE COOPERATION SYSTEM

(51) International classification :G06F13/00,H04M1/00,H04M11/00
(31) Priority Document No :2010044951
(32) Priority Date :02/03/2010
(33) Name of priority country :Japan
(86) International Application No :PCT/JP2011/053607
Filing Date :15/02/2011
(87) International Publication No :WO 2011/108377
(61) Patent of Addition to Application Number :NA
Filing Date :NA
(62) Divisional to Application Number :NA
Filing Date :NA

(71)**Name of Applicant :**
1)NEC CORPORATION
Address of Applicant :7 1Shiba 5 chome Minato ku Tokyo 1088001 Japan
(72)**Name of Inventor :**
1)AOKI Noriyuki
2)NAGAI Michio

(57) Abstract :
In order to cooperatively operate a plurality of devices and use a relative relationship between these devices, a device cooperation system includes a first device which has a first transmission function to transmit first information and a second device which has a first relative relationship with the first device, has a first reception function to receive the first information, and generates third information based on the first relative relationship, the first information, and second information.

No. of Pages : 72 No. of Claims : 28

(12) PATENT APPLICATION PUBLICATION
(19) INDIA
(22) Date of filing of Application :28/09/2012
(21) Application No.8367/CHENP/2012 A
(43) Publication Date : 21/03/2014

(54) Title of the invention : DEVICE FOR CONVEYING HONEYCOMB STRUCTURAL BODY METHOD FOR SEALING HONEYCOMB STRUCTURAL BODY AND METHOD FOR PRODUCING HONEYCOMB STRUCTURAL BODY

(51) International classification	:B28B11/02,B01D39/20,B25J13/08
(31) Priority Document No	:2010272770
(32) Priority Date	:07/12/2010
(33) Name of priority country	:Japan
(86) International Application No	:PCT/JP2011/075746
Filing Date	:08/11/2011
(87) International Publication No	:WO 2012/077449
(61) Patent of Addition to Application Number	:NA
Filing Date	:NA
(62) Divisional to Application Number	:NA
Filing Date	:NA

(71)**Name of Applicant :**
1)SUMITOMO CHEMICAL COMPANY LIMITED
Address of Applicant :27 1 Shinkawa 2 chome Chuo ku Tokyo 1048260 Japan
(72)**Name of Inventor :**
1)MORI Masaharu
2)GONG Ying

(57) Abstract :
A conveyance device (400) for a honeycomb structural body can easily perform accurate alignment between a through hole of the honeycomb structural body and a through hole of a sealing mask. An image of an end face of a honeycomb structural body (70) griped by a hand (10) is captured by a camera (90); an initial rotation angle around the vertical axis of the honeycomb structural body (70) at a reference position where the image is captured is recognized on the basis of the image; an arm swing unit (40) is driven to convey the honeycomb structural body (100) gripped by the hand (10) from the reference position to the position above a sealing mask (170); a rotation angle necessary to obtain a desired final rotation angle of the honeycomb structural body (100) at the position above the sealing mask (170) is acquired on the basis of the initial rotation angle recognized at the reference position and the rotation angle around the vertical axis of the honeycomb structural body caused by the driving of the arm swing unit (40) from the reference position to the position above the sealing mask; and the honeycomb structural body (70) is rotated on the basis of the necessary rotation angle.

No. of Pages : 36 No. of Claims : 11

(12) PATENT APPLICATION PUBLICATION
(19) INDIA
(22) Date of filing of Application :28/09/2012
(21) Application No.8369/CHENP/2012 A
(43) Publication Date : 21/03/2014

(54) Title of the invention : INK FOR PRINTING A MOBILE PHONE ANTENNA PATTERN METHOD FOR MANUFACTURING A SYNTHETIC RESIN PART FOR A MOBILE PHONE ON WHICH AN ANTENNA PATTERN IS PRINTED USING THE INK AND SYNTHETIC RESIN PART FOR A MOBILE PHONE ON WHICH AN ANTENNA PATTERN IS PRINTED

(51) International classification :C09D11/10,C09D5/24,H01Q1/38
(31) Priority Document No :1020100028626
(32) Priority Date :30/03/2010
(33) Name of priority country :Republic of Korea
(86) International Application No :PCT/KR2010/004364
Filing Date :05/07/2010
(87) International Publication No :WO 2011/122737
(61) Patent of Addition to Application Number :NA
Filing Date :NA
(62) Divisional to Application Number :NA
Filing Date :NA

(71)**Name of Applicant :**
1)YEN AN TECHNOLOGY CO. LTD
Address of Applicant :145B 4L 717 1 Gojan dong Namdong gu Incheon si 405 821 Republic of Korea
2)MOBITECH CORP
(72)**Name of Inventor :**
1)LEE Kyung Sook
2)PARK Se Yong
3)LIM Chul An
4)KIM Byoung Nam

(57) Abstract :
According to the present invention an ink for printing a mobile phone antenna pattern is characterized in that either silver (Ag) powder nickel (Ni) powder copper (Cu) powder or gold (Au) powder and liquid acrylonitrile liquid polystyrene liquid butadiene and methyl ethyl ketone (MEK) serving as a diluent are mixed together. Compared to the prior art a plating process is not necessary thus significantly improving productivity.

No. of Pages : 27 No. of Claims : 17

(12) PATENT APPLICATION PUBLICATION
(19) INDIA
(22) Date of filing of Application :28/09/2012
(21) Application No.8370/CHENP/2012 A
(43) Publication Date : 21/03/2014

(54) Title of the invention : CATALYST HAVING SURFACE MODIFIED METAL NANOPARTICLES IMMOBILIZED IN STATIONARY PHASE IN WHICH A POLYMER ELECTROLYTE MEMBRANE IS FORMED AND PREPARATION METHOD THEREOF

(51) International classification :B01J23/40,B01J23/70,B01J37/02
(31) Priority Document No :1020100027651
(32) Priority Date :29/03/2010
(33) Name of priority country :Republic of Korea
(86) International Application No :PCT/KR2011/002055
Filing Date :25/03/2011
(87) International Publication No :WO 2011/122791
(61) Patent of Addition to Application Number :NA
Filing Date :NA
(62) Divisional to Application Number :NA
Filing Date :NA

(71)**Name of Applicant :**
1)SK INNOVATION CO. LTD.
Address of Applicant :99 Seorin dong Jongro gu Seoul 110 110 Republic of Korea
(72)**Name of Inventor :**
1)CHUNG Young Min
2)KWON Yong Tak
3)KIM Tae Jin
4)OH Seung Hoon
5)LEE Chang Soo
6)KIM Bo Yeol

(57) Abstract :
The present invention relates to a catalyst having surface modified metal nanoparticles immobilized in a stationary phase in which a polymer electrolyte membrane is formed and a preparation method thereof. The catalyst of the present invention may be used in a process for producing hydrogen peroxide by direct synthesis from oxygen and hydrogen.

No. of Pages : 24 No. of Claims : 11

(12) PATENT APPLICATION PUBLICATION
(19) INDIA
(22) Date of filing of Application :31/07/2012
(21) Application No.6743/CHENP/2012 A
(43) Publication Date : 21/03/2014

(54) Title of the invention : TRANSPARENT LASER WRITABLE POLYURETHANE

(51) International classification :B41M5/26,C08G18/48,C08K3/22
(31) Priority Document No :10150111.2
(32) Priority Date :05/01/2010
(33) Name of priority country :EPO
(86) International Application No :PCT/EP2011/050015
Filing Date :03/01/2011
(87) International Publication No :WO 2011/083100 A1
(61) Patent of Addition to Application Number :NA
Filing Date :NA
(62) Divisional to Application Number :NA
Filing Date :NA

(71)**Name of Applicant :**
1)BASF SE
Address of Applicant :67056 Ludwigshafen Germany
(72)**Name of Inventor :**
1)PRISSOK Frank
2)DVEL Nicole
3)GLINKA Aleksander

(57) Abstract :
The present invention relates to a transparent laser writable preferably thermoplastic polyurethane to the production thereof and to the use thereof.

No. of Pages : 14 No. of Claims : 12

(12) PATENT APPLICATION PUBLICATION
(19) INDIA
(22) Date of filing of Application :27/08/2012
(21) Application No.7417/CHENP/2012 A
(43) Publication Date : 21/03/2014

(54) Title of the invention : HEAT STORING MOLDINGS

(51) International classification :C09K5/06,D01F1/10,D01D5/088
(31) Priority Document No :10 2010 007 497.7
(32) Priority Date :09/02/2010
(33) Name of priority country :Germany
(86) International Application No :PCT/EP2011/000450
Filing Date :01/02/2011
(87) International Publication No :WO 2011/098225
(61) Patent of Addition to Application Number :NA
Filing Date :NA
(62) Divisional to Application Number :NA
Filing Date :NA

(71)**Name of Applicant :**
1)THRINGISCHES INSTITUT FR TEXTIL UND KUNSTSTOFF FORSCHUNG E.V.
Address of Applicant :Breitscheidstrae 97 07407 Rudolstadt Germany
(72)**Name of Inventor :**
1)SCHTZ Angelo
2)REINEMANN Stefan

(57) Abstract :
Fiber like or film like moldings are produced from a plasticized mixture which based on its weight is composed of 60 to 10% by weight of a carrier component and 40 to 90% by weight of a phase change material wherein based on the weight of the plasticized mixture the carrier component contains 5 to 20% by weight of a polymer or polymer blend from the group comprising LDPE (low density polyethylene) HDPE (high density polyethylene) PMMA (polymethyl methacrylate) polycarbonate and mixtures thereof 5 to 20% by weight of a styrene block copolymer and 0 to 20% by weight of one or more additives and the phase change material is selected from the group comprising natural and synthetic paraffins polyethylene glycol (= polyethylene oxide) and mixtures thereof and the plasticized mixture is extruded through a spinneret or a slit die at a temperature of 130 to 220° C and is stretched.

No. of Pages : 43 No. of Claims : 16

(12) PATENT APPLICATION PUBLICATION
(19) INDIA
(22) Date of filing of Application :26/09/2012
(21) Application No.8291/CHENP/2012 A
(43) Publication Date : 21/03/2014

(54) Title of the invention : PISTON ROD ASSEMBLY FOR A DRUG DELIVERY DEVICE

(51) International classification :A61M5/315
(31) Priority Document No :10158613.9
(32) Priority Date :31/03/2010
(33) Name of priority country :EPO
(86) International Application No :PCT/EP2011/054986
Filing Date :31/03/2011
(87) International Publication No :WO 2011/121061
(61) Patent of Addition to Application Number :NA
Filing Date :NA
(62) Divisional to Application Number :NA
Filing Date :NA

(71)**Name of Applicant :**
1)SANOFI AVENTIS DEUTSCHLAND GMBH
Address of Applicant :Br¼ningstrasse 50, D-65929 Frankfurt am Main Germany
(72)**Name of Inventor :**
1)HELMER Michael
2)EISENGARTHEN Christoph
3)HUTHMACHER Winfried
4)MOSEBACH Carsten
5)ZEIMETZ Leo

(57) Abstract :
The present invention relates to a piston rod assembly for a drug delivery device comprising: a piston rod (200) adapted to be operably engaged with a piston (155) of a cartridge (153) containing a medicament at least one adjusting member (202) displaceably disposed at the piston rod (200) with respect to the piston rod s (200) long axis and being interconnected with a distal end section (206) of the piston rod (200) and at least one interlock means (216) adapted to interact with the adjusting member (202) and/or with the piston rod (200) for mutually locking in position the adjusting member (202) and the piston rod (200) in an arbitrary relative position in order to compensate for tolerances of manufacture and/or of assembly.

No. of Pages : 36 No. of Claims : 15

(12) PATENT APPLICATION PUBLICATION
(19) INDIA
(22) Date of filing of Application :16/07/2012
(21) Application No.6229/CHENP/2012 A
(43) Publication Date : 21/03/2014

(54) Title of the invention : USER INTERFACE UNIT FOR FETCHING ONLY ACTIVE REGIONS OF A FRAME

(51) International classification :G06F3/14,H04N5/265
(31) Priority Document No :12/685,152
(32) Priority Date :11/01/2010
(33) Name of priority country :U.S.A.
(86) International Application No :PCT/US2011/020254
Filing Date :05/01/2011
(87) International Publication No :WO 2011/085024 A1
(61) Patent of Addition to Application Number :NA
Filing Date :NA
(62) Divisional to Application Number :NA
Filing Date :NA

(71)**Name of Applicant :**
1)APPLE INC.
Address of Applicant :1 Infinite Loop Cupertino CA 95014 U.S.A.
(72)**Name of Inventor :**
1)BRATT Joseph P.
2)CHOO Shing Horng
3)HOLLAND Peter F.
4)MILLET Timothy J.

(57) Abstract :
A user interface unit in a graphics processing display pipe may include registers programmable with information that defines active regions of an image frame. Pixels within the active regions of the image frame are meant to be displayed while pixels outside of the active regions of the image frame are not to be displayed. Fetch circuitry within the user interface unit may fetch frames from memory fetching only the pixels within the active regions of the image frames as defined by the programmed contents of the registers. The user interface unit may then provide the fetched pixels to a blend unit to blend the fetched pixels with pixels from other frames or pixels of a video stream to produce output frames. When blended with pixels of a video stream the fetched pixels may be displayed as a graphics overlay on top of the video stream.

No. of Pages : 17 No. of Claims : 15

(12) PATENT APPLICATION PUBLICATION
(19) INDIA
(22) Date of filing of Application :24/07/2012
(21) Application No.6517/CHENP/2012 A
(43) Publication Date : 21/03/2014

(54) Title of the invention : PERFORMANCE ENHANCING LAYERS FOR FUEL CELLS

(51) International classification :H01M8/02,H01M4/86
(31) Priority Document No :61/290444
(32) Priority Date :28/12/2009
(33) Name of priority country :U.S.A.
(86) International Application No :PCT/CA2010/002026
Filing Date :23/12/2010
(87) International Publication No :WO 2011/079378
(61) Patent of Addition to Application Number :NA
Filing Date :NA
(62) Divisional to Application Number :NA
Filing Date :NA

(71)**Name of Applicant :**
1)SOCIETE BIC
Address of Applicant :14 rue Jeanne dAsnieres 92611 Clichy France
(72)**Name of Inventor :**
1)HOU Guoyan
2)SCHROOTEN Jeremy
3)MCLEAN Gerard F.
4)SAWADA James Alexander
5)WANG Tao

(57) Abstract :
Embodiments relate to a performance enhancing layer for a fuel cell including one or more electrically conductive materials at least one of the electrically conductive materials including particles which are morphologically anisotropic and oriented to impart anisotropic conductivity in the layer and a binder wherein the binder positions the particles in contact with each other.

No. of Pages : 47 No. of Claims : 30

(12) PATENT APPLICATION PUBLICATION
(19) INDIA
(22) Date of filing of Application :23/08/2012
(21) Application No.7308/CHENP/2012 A
(43) Publication Date : 21/03/2014

(54) Title of the invention : POLYMER COMPOUND AND LIGHT EMITTING DEVICE USING SAME

(51) International classification :C08G61/10,C07C25/22,C07F5/02
(31) Priority Document No :2010-016533
(32) Priority Date :28/01/2010
(33) Name of priority country :Japan
(86) International Application No :PCT/JP2011/051707
Filing Date :28/01/2011
(87) International Publication No :WO 2011/093428
(61) Patent of Addition to Application Number :NA
Filing Date :NA
(62) Divisional to Application Number :NA
Filing Date :NA

(71)**Name of Applicant :**
1)SUMITOMO CHEMICAL COMPANY LIMITED
Address of Applicant :27 1 Shinkawa 2 chome Chuo ku Tokyo 1048260 Japan
2)Cambridge Display Technology Limited
(72)**Name of Inventor :**
1)FUKUSHIMA Daisuke
2)TIERNEY Brian
3)CONWAY Natasha
4)MCKIERNAN Mary

(57) Abstract :
Disclosed is a polymer compound which when used in a light emitting device imparts an excellent luminance life to the light emitting device. Specifically disclosed is a polymer compound comprising a structural unit represented by formula (1). In formula (1) R R R and R represent an unsubstituted alkyl group; R and R represent an unsubstituted or substituted alkyl group an unsubstituted or substituted alkoxy group an unsubstituted or substituted aryl group an unsubstituted or substituted aryloxy group an unsubstituted or substituted heterocyclic group an unsubstituted or substituted silyl group a halogen atom an alkoxycarbonyl group a carbonyl group or a cyano group; R and R represent an unsubstituted or substituted alkyl group an unsubstituted or substituted alkoxy group or an unsubstituted or substituted aryl group; and a b c and d represent each an integer of 0 3 provided that when there are multiple R s R s R s and R s these R s R s R s and R s may be either the same or different.

No. of Pages : 197 No. of Claims : 20

(12) PATENT APPLICATION PUBLICATION
(19) INDIA
(22) Date of filing of Application :04/07/2012
(21) Application No.5850/CHENP/2012 A
(43) Publication Date : 21/03/2014

(54) Title of the invention : SYSTEMS AND METHODS FOR MANAGING PORTS FOR RTSP ACROSS CORES IN A MULTI CORE SYSTEM

(51) International classification :H04L29/06,G06F15/16
(31) Priority Document No :61/289540
(32) Priority Date :23/12/2009
(33) Name of priority country :U.S.A.
(86) International Application No :PCT/US2010/061755
Filing Date :22/12/2010
(87) International Publication No :WO 2011/079182
(61) Patent of Addition to Application Number :NA
Filing Date :NA
(62) Divisional to Application Number :NA
Filing Date :NA

(71)**Name of Applicant :**
1)CITRIX SYSTEMS INC.
Address of Applicant :851 West Cypress Creek Road Fort Lauderdale Florida 33309 U.S.A.
(72)**Name of Inventor :**
1)YENGALASETTI Sreedhar
2)NARAYANA Raghav Somanahalli

(57) Abstract :
The present application is directed towards systems and methods for systems and methods for handling real time streaming protocol sessions by an intermediary multi core system. When a multi core intermediary receives a setup request for a real time streaming protocol session the intermediary processes and forwards the request to a server providing the streaming media. The server sets up an RTSP session and transmits a session identification to the multi core intermediary. A core of the intermediary receives the transmitted session identification and determines an owner core of the session based on a hash of the session identification. The core transmits the session information to the determined owner core which selects two consecutive ports on which to establish listening services. The owner core then notifies all other cores to establish listening services on the same consecutive ports such that any core that receives an RTSP control message from a client can handle it properly.

No. of Pages : 122 No. of Claims : 20

(12) PATENT APPLICATION PUBLICATION
(19) INDIA
(22) Date of filing of Application :23/07/2012
(21) Application No.6459/CHENP/2012 A
(43) Publication Date : 21/03/2014

(54) Title of the invention : METHODS AND COATINGS FOR TREATING BIOFILMS

(51) International classification :A01N37/44,A01N43/50,A01P1/00
(31) Priority Document No :61/293414
(32) Priority Date :08/01/2010
(33) Name of priority country :U.S.A.
(86) International Application No :PCT/US2011/020706
Filing Date :10/01/2011
(87) International Publication No :WO 2011/109119 A1
(61) Patent of Addition to Application Number :NA
Filing Date :NA
(62) Divisional to Application Number :NA
Filing Date :NA

(71)**Name of Applicant :**
1)PRESIDENT AND FELLOWS OF HARVARD COLLEGE
Address of Applicant :17 Quincy Street Cambridge MA 02138 U.S.A.
(72)**Name of Inventor :**
1)LOSICK Richard
2)CLARDY Jon
3)KOLTER Roberto
4)KOLODKIN GAL Illana
5)ROMERO Diego
6)CAO Shugeng

(57) Abstract :
A method of treating reducing or inhibiting biofilm formation by bacteria the method comprising: contacting an article with a composition comprising an effective amount of a D amino acid said composition being essentially free of the corresponding L amino acid thereby treating reducing or inhibiting formation of the biofilm wherein the D amino acid is selected from the group consisting of D alanine D cysteine D aspartic acid D glutamic acid D histidine D isoleucine D lysine D leucine D asparagine D proline D glutamine D arginine D serine D threonine D valine D tryptophan D tyrosine and a combination thereof.

No. of Pages : 80 No. of Claims : 47

(12) PATENT APPLICATION PUBLICATION
(19) INDIA
(22) Date of filing of Application :27/08/2012
(21) Application No.7400/CHENP/2012 A
(43) Publication Date : 21/03/2014

(54) Title of the invention : A TILE BASED PROCESSOR ARCHITECTURE MODEL FOR HIGH EFFICIENCY EMBEDDED HOMOGNEOUS MULTICORE PLATFORMS

(51) International classification :G06F15/173,G06F15/78
(31) Priority Document No :1001621.0
(32) Priority Date :01/02/2010
(33) Name of priority country :U.K.
(86) International Application No :PCT/EP2011/051297
Filing Date :31/01/2011
(87) International Publication No :WO 2011/092323
(61) Patent of Addition to Application Number :NA
Filing Date :NA
(62) Divisional to Application Number :NA
Filing Date :NA

(71)**Name of Applicant :**
1)MANET Philippe
Address of Applicant :Avenue de Messidor 213 bte 3 B 1180 Brussels Belgium
2)ROUSSEAU Bertrand
(72)**Name of Inventor :**
1)MANET Philippe
2)ROUSSEAU Bertrand

(57) Abstract :
The present invention relates to a processor which comprises processing elements that execute instructions in parallel and are connected together with point to point communication links called data communication links (DCL). The instructions use DCLs to communicate data between them. In order to realize those communications they specify the DCLs from which they take their operands and the DCLs to which they write their results. The DCLs allow the instructions to synchronize their executions and to explicitly manage the data they manipulate. Communications are explicit and are used to realize the storage of temporary variables which is decoupled from the storage of long living variables.

No. of Pages : 87 No. of Claims : 12

(12) PATENT APPLICATION PUBLICATION
(19) INDIA
(22) Date of filing of Application :11/09/2012
(21) Application No.7833/CHENP/2012 A
(43) Publication Date : 21/03/2014

(54) Title of the invention : MODIFICATION OF POZZOLANIC CHEMISTRY AT PRODUCTION PLANT

(51) International classification :C04B18/08,C04B7/26,C04B7/12
(31) Priority Document No :61/305423
(32) Priority Date :17/02/2010
(33) Name of priority country :U.S.A.
(86) International Application No :PCT/US2011/025348
Filing Date :17/02/2011
(87) International Publication No :WO 2011/103371
(61) Patent of Addition to Application Number :NA
Filing Date :NA
(62) Divisional to Application Number :NA
Filing Date :NA

(71)**Name of Applicant :**
1)ROMAN CEMENT LLC
Address of Applicant :282 East Maxine Circle Bountiful UT 84010 U.S.A.
(72)**Name of Inventor :**
1)HANSEN Andrew S.
2)GUYNN John M.

(57) Abstract :
Modified pozzolans and methods for making modified pozzolans that have desired chemical characteristics. The desired chemical characteristics are achieved by introducing one or more supplementary materials into the production plant that produces the pozzolans (e.g. usually as a waste material such as fly ash or slag). The supplementary material is incorporated into the pozzolan during its formation in the production plant and becomes an integral chemical constituent of the pozzolan. By forming the pozzolan with the desired characteristics in the production plant the pozzolan can have optimal performance when blended with Portland cement for use in concrete.

No. of Pages : 21 No. of Claims : 16

(12) PATENT APPLICATION PUBLICATION
(19) INDIA
(22) Date of filing of Application :11/09/2012
(21) Application No.7835/CHENP/2012 A
(43) Publication Date : 21/03/2014

(54) Title of the invention : COMMUNICATION STATION AND METHOD FOR TRANSMITTING ON A RANDOM ACCESS CHANNEL

(51) International classification :H04W56/00,H04W74/00
(31) Priority Document No :10290128.7
(32) Priority Date :12/03/2010
(33) Name of priority country :EPO
(86) International Application No :PCT/IB2011/051003
Filing Date :10/03/2011
(87) International Publication No :WO 2011/111012
(61) Patent of Addition to Application Number :NA
Filing Date :NA
(62) Divisional to Application Number :NA
Filing Date :NA

(71)**Name of Applicant :**
1)RESEARCH IN MOTION LIMITED
Address of Applicant :295 Phillip Street Waterloo Ontario N2L 3W8 Canada
(72)**Name of Inventor :**
1)HOLE David Philip
2)FAURIE Rene
3)VENKOB Satish
4)HANOV Steven Michael
5)BORSELLA Remo
6)KREUZER Werner

(57) Abstract :
Embodiments of a communication station and method for transmitting on a random access channel (RACH) in a wireless network are generally described herein. In some embodiments the communication station may configure an initial access burst for transmission on the enhanced RACH. The initial access burst may include at least one of a shortened identifier and user data. The initial access burst may be configured to be no greater than a single time slot of the enhanced RACH and may be transmitted with a timing advance to be received within the single time slot of the enhanced RACH.

No. of Pages : 37 No. of Claims : 17

(12) PATENT APPLICATION PUBLICATION
(19) INDIA
(22) Date of filing of Application :11/09/2012
(21) Application No.7836/CHENP/2012 A
(43) Publication Date : 21/03/2014

(54) Title of the invention : BASE STATION AND METHOD FOR RECEIVING TRANSMISSIONS ON AN ENHANCED RANDOM ACCESS CHANNEL

(51) International classification :H04W74/08
(31) Priority Document No :10290133.7
(32) Priority Date :12/03/2010
(33) Name of priority country :EPO
(86) International Application No :PCT/IB2011/051011
Filing Date :10/03/2011
(87) International Publication No :WO 2011/111018
(61) Patent of Addition to Application Number :NA
Filing Date :NA
(62) Divisional to Application Number :NA
Filing Date :NA

(71)**Name of Applicant :**
1)RESEARCH IN MOTION LIMITED
Address of Applicant :295 Phillip Street Waterloo Ontario N2L 3W8 Canada
(72)**Name of Inventor :**
1)HOLE David Philip
2)FAURIE Rene
3)VENKOB Satish
4)HANOV Steven Michael
5)BORSELLA Remo
6)KREUZER Werner

(57) Abstract :
Embodiments of a base station and method for receiving on an enhanced random access channel (RACH) in a wireless network are generally described herein. The base station may receive an initial access burst from a communication station on the enhanced RACH The initial access burst may include a shortened and may be transmitted by the communication station with a timing advance to be received within a single time slot of the enhanced RACH. The base station associates additional information with the data received on the enhanced RACH for forwarding to a network destination.

No. of Pages : 43 No. of Claims : 16

(12) PATENT APPLICATION PUBLICATION
(19) INDIA
(22) Date of filing of Application :11/09/2012
(21) Application No.7837/CHENP/2012 A
(43) Publication Date : 21/03/2014

(54) Title of the invention : COMMUNICATION STATION AND METHOD FOR TRANSMITTING ADDITIONAL INFORMATION ON AN ENHANCED RANDOM ACCESS CHANNEL

(51) International classification :H04W74/08
(31) Priority Document No :10290132.9
(32) Priority Date :12/03/2010
(33) Name of priority country :EPO
(86) International Application No :PCT/IB2011/051008
Filing Date :10/03/2011
(87) International Publication No :WO 2011/111016
(61) Patent of Addition to Application Number :NA
Filing Date :NA
(62) Divisional to Application Number :NA
Filing Date :NA

(71)**Name of Applicant :**
1)RESEARCH IN MOTION LIMITED
Address of Applicant :295 Phillip Street Waterloo Ontario N2L 3W8 Canada
(72)**Name of Inventor :**
1)HOLE David Philip
2)FAURIE Rene
3)VENKOB Satish
4)HANOV Steven Michael
5)BORSELLA Remo
6)KREUZER Werner

(57) Abstract :
Embodiments of a communication station and method for transmitting additional information on an enhanced random access channel (RACH) in a wireless network are generally described herein. In some embodiments the communication station may configure an initial access burst for transmission on the enhanced RACH. The initial access burst may include additional information including at least one of information about a requested data channel information about capabilities of the communication station and information identifying the communication station. The initial access burst may be transmitted with a timing advance that is greater than zero to be received within the single time slot of the enhanced RACH.

No. of Pages : 43 No. of Claims : 16

(12) PATENT APPLICATION PUBLICATION
(19) INDIA
(22) Date of filing of Application :28/08/2012
(21) Application No.7445/CHENP/2012 A
(43) Publication Date : 21/03/2014

(54) Title of the invention : ACTUATOR FOR A BRAKING DEVICE AND AN ELEVATOR INSTALLATION

(51) International classification :B66B5/18,B66B5/20,F16D65/14
(31) Priority Document No :10156865.7
(32) Priority Date :18/03/2010
(33) Name of priority country :EPO
(86) International Application No :PCT/EP2011/053670
Filing Date :11/03/2011
(87) International Publication No :WO 2011/113754
(61) Patent of Addition to Application Number :NA
Filing Date :NA
(62) Divisional to Application Number :NA
Filing Date :NA

(71)**Name of Applicant :**
1)INVENTIO AG
Address of Applicant :Seestrasse 55 CH 6052 Hergiswil Switzerland
(72)**Name of Inventor :**
1)HUSMANN Josef

(57) Abstract :
In this elevator installation an elevator car (2) is arranged such that it can move along at least two guide rails (6) and the elevator car (2) is equipped with an actuator (30) for operating the brakes (11 11a). The brake (11 11a) preferably has a brake pad (15 15a) with an essentially curved shape and the brake pad (15 15a) is arranged such that it can rotate in a brake pad carriage (13 13a). The brake (11 11a) is operated by the actuator (30). The actuator (30) holds the brake (11 11a) in a readiness position and can operate the brake (11 11a) as required. For this purpose the actuator (30) has a force store (31) which is suitable for acting on the brake (11 11a) via a connecting point (37 37a) when required and for moving the brake (11 11a) to its engaged position or for operating it. The force store (31) is held electromagnetically and a resetting device (36) allows the force store (31) and the actuator (30) to be reset to the operating position after they have been operated.

No. of Pages : 38 No. of Claims : 8

(12) PATENT APPLICATION PUBLICATION
(19) INDIA
(22) Date of filing of Application :18/09/2012
(21) Application No.8055/CHENP/2012 A
(43) Publication Date : 21/03/2014

(54) Title of the invention : HYDRAULIC GENERATOR

(51) International classification :F03B17/02,F03B17/04
(31) Priority Document No :P201000036
(32) Priority Date :23/02/2010
(33) Name of priority country :Spain
(86) International Application No :PCT/ES2011/000004
Filing Date :13/01/2011
(87) International Publication No :WO 2011/104394
(61) Patent of Addition to Application Number :NA
Filing Date :NA
(62) Divisional to Application Number :NA
Filing Date :NA

(71)**Name of Applicant :**
1)CAMPOS LVAREZ Sergio
Address of Applicant :C/ Ram³n Cabanillas 1 8° Dr. 32004 Ourense Spain
(72)**Name of Inventor :**
1)CAMPOS LVAREZ Sergio

(57) Abstract :
The invention relates to a hydraulic generator formed by a set of different specific chains which are coordinated and complement one another such as to allow floats to enter a tank and to force said floats along a predetermined path, in order to make maximum use of the upward force thereof. A first chain neutralizes the internal hydraulic pressure on the front of the floats, allowing the floats to be introduced at the bottom of the tank. Once a float has entered the tank, the first chain transfers the float to the second chain which uses the upward force of the floats and converts said force into mechanical work, in accordance with Archimedes principle. The second chain drives the entire system. A third chain removes each float that reaches the surface from the tank and introduces said float into an external channel that returns the float to the entrance, assisted by a fourth chain and a moderate-pressure system that forces the float back in. The operation is repeated automatically and indefinitely. The shaft of the second chain extends through the wall of the tank either directly or indirectly, thereby transmitting the vast majority of the work obtained (since part is consumed in driving the system) in order for the same to be converted externally.

No. of Pages : 11 No. of Claims : 7

(12) PATENT APPLICATION PUBLICATION
(19) INDIA
(22) Date of filing of Application :24/08/2012
(21) Application No.7354/CHENP/2012 A
(43) Publication Date : 21/03/2014

(54) Title of the invention : DISPLAY ELEMENT AND ELECTRIC DEVICE EQUIPPED WITH SAME

(51) International classification :G02F1/17
(31) Priority Document No :2010017053
(32) Priority Date :28/01/2010
(33) Name of priority country :Japan
(86) International Application No :PCT/JP2010/066557
Filing Date :24/09/2010
(87) International Publication No :WO 2011/092892
(61) Patent of Addition to Application Number :NA
Filing Date :NA
(62) Divisional to Application Number :NA
Filing Date :NA

(71)**Name of Applicant :**
1)SHARP KABUSHIKI KAISHA
Address of Applicant :22 22 Nagaike cho Abeno ku Osaka shi Osaka 5458522 Japan
(72)**Name of Inventor :**
1)MATSUOKA Toshiki
2)NAKAMURA Kohzoh
3)UEKI Shun
4)TOMOTOSHI Takuma

(57) Abstract :
A display element (10) comprising an upper substrate (a first substrate) (2) a lower substrate (a second substrate) (3) and an electrically conductive fluid (16) which is enclosed in a display space (S) formed between the upper substrate (2) and the lower substrate (3) in such a manner that the electrically conductive fluid (16) can move in the display space (S) toward an active display area (P1) side and a non active display area (P2) side wherein the display element (10) additionally comprises multiple pixel areas (P) which are formed in intersection units between a signal electrode (4) and a scanning electrode (6) and wherein low dielectric films (15a 15b) each having a lower dielectric constant than that of a dielectric layer (an insulating part) (13) that can insulate a reference electrode (5) from the scanning electrode (6) electrically are so arranged on the lower substrate (3) side as to surround each of the pixel areas (P).

No. of Pages : 44 No. of Claims : 11

(12) PATENT APPLICATION PUBLICATION
(19) INDIA
(22) Date of filing of Application :26/09/2012
(21) Application No.8265/CHENP/2012 A
(43) Publication Date : 21/03/2014

(54) Title of the invention : ARYL CYCLOHEXYL TETRAAZABENZO[E]AZULENES

(51) International classification	:C07D487/04,A61K31/5517,A61P15/12
(31) Priority Document No	:10158871.3
(32) Priority Date	:31/03/2010
(33) Name of priority country	:EPO
(86) International Application No Filing Date	:PCT/EP2011/054582 :25/03/2011
(87) International Publication No	:WO 2011/120877
(61) Patent of Addition to Application Number Filing Date	:NA :NA
(62) Divisional to Application Number Filing Date	:NA :NA

(71)**Name of Applicant :**
1)F. HOFFMANN LA ROCHE AG
Address of Applicant :Grenzacherstrasse 124 CH 4070 Basel Switzerland
(72)**Name of Inventor :**
1)DOLENTE Cosimo
2)SCHNIDER Patrick

(57) Abstract :
The present invention is concerned with aryl cyclohexyl tetraazabenzo[e]azulenes of formula I wherein R R and R are as described herein. The compounds according to the invention act as Via receptor modulators and in particular as Via receptor antagonists their manufacture pharmaceutical compositions containing them and their use as medicaments. The active compounds of the present invention are useful as therapeutics acting peripherally and centrally in the conditions of dysmenorrhea male or female sexual dysfunction hypertension chronic heart failure inappropriate secretion of vasopressin liver cirrhosis nephrotic syndrome anxiety depressive disorders obsessive compulsive disorder autistic spectrum disorders schizophrenia and aggressive behavior.

No. of Pages : 69 No. of Claims : 20

(12) PATENT APPLICATION PUBLICATION
(19) INDIA
(22) Date of filing of Application :26/09/2012
(21) Application No.8267/CHENP/2012 A
(43) Publication Date : 21/03/2014

(54) Title of the invention : METHOD FOR CHANNEL SOUNDING IN WIRELESS LOCAL AREA NETWORK AND APPARATUS FOR THE SAME

(51) International classification :H04B7/04,H04W74/00
(31) Priority Document No :61/418417
(32) Priority Date :01/12/2010
(33) Name of priority country :U.S.A.
(86) International Application No :PCT/KR2011/009107
Filing Date :28/11/2011
(87) International Publication No :WO 2012/074251
(61) Patent of Addition to Application Number :NA
Filing Date :NA
(62) Divisional to Application Number :NA
Filing Date :NA

(71)**Name of Applicant :**
1)LG ELECTRONICS INC.
Address of Applicant :20 Yeouido dong Yeongdeungpo gu Seoul 150 721 Republic of Korea
(72)**Name of Inventor :**
1)LEE Dae Won
2)SOHN Ill Soo
3)SEOK Yong Ho

(57) Abstract :
A channel sounding method in a wireless local area network (WLAN) system is provided. The method performed by a transmitter includes transmitting a null data packet announcement (NDPA) frame to a receiver to initiate a channel sounding procedure; transmitting a null data packet (NDP) to the receiver and receiving a feedback frame. The feedback frame includes a plurality of segment frames and a channel feedback report. The channel feedback report is split into a plurality of feedback segments. Each of the plurality of feedback segments is respectively included in each of the plurality of segment frames. The each of the plurality of segment frames includes a first segment subfield indicating whether the each of the plurality of feedback segment included is a first segment and a remaining segment subfield indicating the number of remaining feedback segments.

No. of Pages : 37 No. of Claims : 11

(12) PATENT APPLICATION PUBLICATION
(19) INDIA
(22) Date of filing of Application :27/09/2012
(21) Application No.8328/CHENP/2012 A
(43) Publication Date : 21/03/2014

(54) Title of the invention : DIESEL FUEL COMPOSITION BASED ON DIETHYL ETHER

(51) International classification :F02B51/02,F02M27/02,C10L1/02
(31) Priority Document No :PA201000273
(32) Priority Date :31/03/2010
(33) Name of priority country :Denmark
(86) International Application No :PCT/EP2011/001023
Filing Date :02/03/2011
(87) International Publication No :WO 2011/120617
(61) Patent of Addition to Application Number :NA
Filing Date :NA
(62) Divisional to Application Number :NA
Filing Date :NA

(71)**Name of Applicant :**
1)HALDOR TOPS˜E A/S
Address of Applicant :Nym¸llevej 55 DK 2800 Kgs. Lyngby Denmark
(72)**Name of Inventor :**
1)JANSSENS Ton V.W.
2)GABRIELSSON Pr L.T.
3)DUWIG Christophe
4)MIKKELSEN Svend Erik

(57) Abstract :
A compression ignition fuel composition comprising diethyl ether (DEE) and water in amounts that correspond to the reaction product of dehydration of anhydrous or hydrous ethanol (EtOH) with water content between 0 and 30 wt% and further characterized by: a) a diethyl ether content in wt% that is larger than or equal to 50 and a water content in wt% that is lower than or equal to 50 minus concentration of ethanol in wt% for mixtures containing 0 to 20 wt% ethanol; or b) a diethyl ether content in wt% that is larger than or equal to 54 minus 0.2 times the ethanol concentration in wt% and a water content in wt% that is lower than or equal to 46 minus the 0.8 times concentration of ethanol in wt% for mixtures containing 20 to 30 wt% ethanol; or c) a diethyl ether content in wt% that is larger than or equal to 61.5 minus 0.45 times the ethanol concentration in wt% and a water content in wt% that is lower than or equal to 38.5 minus the 0.55 times concentration of ethanol in wt% for mixtures containing 30 to 70 wt% ethanol.

No. of Pages : 20 No. of Claims : 5

(12) PATENT APPLICATION PUBLICATION
(19) INDIA
(22) Date of filing of Application :27/09/2012
(21) Application No.8329/CHENP/2012 A
(43) Publication Date : 21/03/2014

(54) Title of the invention : HIGH CARBON STEEL WIRE WITH EXCELLENT SUITABILITY FOR WIREDRAWING AND FATIGUE PROPERTY AFTER WIREDRAWING

(51) International classification :C22C38/06,C22C38/32,C21D8/06
(31) Priority Document No :2010085581
(32) Priority Date :01/04/2010
(33) Name of priority country :Japan
(86) International Application No :PCT/JP2011/056363
Filing Date :17/03/2011
(87) International Publication No :WO 2011/125447 A1
(61) Patent of Addition to Application Number :NA
Filing Date :NA
(62) Divisional to Application Number :NA
Filing Date :NA

(71)**Name of Applicant :**
1)KABUSHIKI KAISHA KOBE SEIKO SHO
Address of Applicant :10 26 Wakinohama cho 2 chome Chuo ku Kobe shi Hyogo 6518585 Japan
(72)**Name of Inventor :**
1)OURA Hiroshi
2)YOSHIHARA Nao

(57) Abstract :
Provided is a high carbon steel wire which gives steel wires having high strength and has excellent suitability for wiredrawing and which after being wiredrawn has excellent fatigue properties. The high carbon steel wire has an adequately regulated chemical composition and has a pearlite structure in an areal proportion of 90% or more. In 2 000 μm of the pearlite structure the number of BN compound grains having an equivalent circle diameter of 100 nm or more but less than 1 000 nm is 100 or less (including 0) and the number of BN compound grains having an equivalent circle diameter of 1 000 nm or more is 10 or less (including 0).

No. of Pages : 28 No. of Claims : 3

(12) PATENT APPLICATION PUBLICATION
(19) INDIA
(22) Date of filing of Application :13/07/2012
(21) Application No.6180/CHENP/2012 A
(43) Publication Date : 21/03/2014

(54) Title of the invention : CONTROLLING CROSS WEB LAYER PROFILE OF A MULTILAYER POLYMER FILM

(51) International classification :B29C47/58,B29C47/70,B29C47/92
(31) Priority Document No :61/295,329
(32) Priority Date :15/01/2010
(33) Name of priority country :U.S.A.
(86) International Application No :PCT/US2011/020666
Filing Date :10/01/2011
(87) International Publication No :WO 2011/087983 A1
(61) Patent of Addition to Application Number :NA
Filing Date :NA
(62) Divisional to Application Number :NA
Filing Date :NA

(71)**Name of Applicant :**
1)3M INNOVATIVE PROPERTIES COMPANY
Address of Applicant :3M Center Post Office Box 33427 Saint Paul Minnesota 55133 3427 U.S.A.
(72)**Name of Inventor :**
1)DERKS Kristopher J.
2)BIEGLER Robert M.
3)NEAVIN Terence D.

(57) Abstract :
A method and an apparatus for forming a plurality of polymer layers via a plurality of slots (60) wherein the plurality of layers are combined to generate a multilayer polymer flow stream; and controlling heat flow to the plurality of slots in conjunction with the formation of the plurality of polymer layers. The multilayer polymer flow stream may be used to generate a multilayer film. In some embodiments the cross web layer thickness profile may be controlled by controlling heat flow from heaters (54a 54b) to the plurality of slots that form the plurality of polymer layers.

No. of Pages : 47 No. of Claims : 28

(12) PATENT APPLICATION PUBLICATION
(19) INDIA
(22) Date of filing of Application :07/08/2012
(21) Application No.6901/CHENP/2012 A
(43) Publication Date : 21/03/2014

(54) Title of the invention : HYDROCARBON GAS PROCESSING

(51) International classification :F25J3/00
(31) Priority Document No :61/295119
(32) Priority Date :14/01/2010
(33) Name of priority country :U.S.A.
(86) International Application No :PCT/US2010/062402
Filing Date :29/12/2010
(87) International Publication No :WO 2011/087884
(61) Patent of Addition to Application Number :NA
Filing Date :NA
(62) Divisional to Application Number :NA
Filing Date :NA

(71)**Name of Applicant :**
1)ORTLOFF ENGINEERS LTD.
Address of Applicant :415 West Wall Suite 200 Midland TX 79701 U.S.A.
(72)**Name of Inventor :**
1)PIERCE Michael C.
2)WILKINSON John D.
3)HUDSON Hank M.

(57) Abstract :
A process and an apparatus are disclosed for recovering ethane ethylene and heavier hydrocarbon components from a hydrocarbon gas stream. The stream is cooled expanded to lower pressure and supplied to a first fractionation tower at a mid column feed position. A distillation liquid stream is withdrawn from the first fractionation tower below the feed position of the expanded stream heated and directed into a second fractionation tower that produces an overhead vapor stream and a bottom liquid stream. The overhead vapor stream is cooled to condense it with a portion of the condensed stream directed to the second fractionation tower as its top feed and the remainder directed to the first fractionation tower at a lower column feed position. The bottom liquid stream from the second fractionation tower is cooled and directed to the first fractionation tower as its top feed.

No. of Pages : 50 No. of Claims : 16

(12) PATENT APPLICATION PUBLICATION
(19) INDIA
(22) Date of filing of Application :13/08/2012
(21) Application No.7064/CHENP/2012 A
(43) Publication Date : 21/03/2014

(54) Title of the invention : ENTEROCOCCAL CELL WALL COMPONENTS AND ANTIBACTERIAL USE THEREOF

(51) International classification :A61K31/715,A61K31/726,A61K39/02
(31) Priority Document No :NA
(32) Priority Date :NA
(33) Name of priority country :NA
(86) International Application No :PCT/EP2010/000285
Filing Date :19/01/2010
(87) International Publication No :WO 2011/088843
(61) Patent of Addition to Application Number :NA
Filing Date :NA
(62) Divisional to Application Number :NA
Filing Date :NA

(71)**Name of Applicant :**
1)UNIVERSIT„TSKLINIKUM FREIBURG
Address of Applicant :Hugstetter Str. 49 79106 Freiburg Germany
(72)**Name of Inventor :**
1)HBNER Johannes
2)THEILACKER Christian
3)HOST Otto
4)KACZYNSKI Zbigniew

(57) Abstract :
The present invention relates to enterococcal cell wall components and their uses in the prevention and therapy of bacterial infection.

No. of Pages : 20 No. of Claims : 14

(12) PATENT APPLICATION PUBLICATION
(19) INDIA
(22) Date of filing of Application :02/07/2012
(21) Application No.5780/CHENP/2012 A
(43) Publication Date : 21/03/2014

(54) Title of the invention : ASSET DETECTION APPARATUS AND METHOD

(51) International classification :G01V15/00,F16L1/11
(31) Priority Document No :0921872.8
(32) Priority Date :15/12/2009
(33) Name of priority country :U.K.
(86) International Application No :PCT/GB2010/052097
Filing Date :15/12/2010
(87) International Publication No :WO 2011/073657 A3
(61) Patent of Addition to Application Number :NA
Filing Date :NA
(62) Divisional to Application Number :NA
Filing Date :NA

(71)**Name of Applicant :**
1)ISIS INNOVATION LTD
Address of Applicant :Ewert House Ewert Place Summertown Oxford Oxfordshire OX2 7SQ U.K.
(72)**Name of Inventor :**
1)EDWARDS David John
2)STEVENS Christopher John
3)HAO Tong
4)BURD Harvey John

(57) Abstract :
Embodiments of the present invention provide a resonant assembly (105 305 405 700 750 930) comprising first and second resonant members (110 410) the first and second resonant members each being configured to resonate at a respective different resonant frequency when excited by an electromagnetic field wherein at least one resonant member comprises a discontinuous loop (112 710 760) having at least one capacitive element (114 720 721 722 770 771 772) connected between free ends of the loop.

No. of Pages : 35 No. of Claims : 18

(12) PATENT APPLICATION PUBLICATION
(19) INDIA
(22) Date of filing of Application :06/08/2012
(21) Application No.6873/CHENP/2012 A
(43) Publication Date : 21/03/2014

(54) Title of the invention : COMMUNICATION SYSTEM AND COMMUNICATION METHOD

(51) International classification :H04W76/02,H04W84/18,H04W88/04
(31) Priority Document No :2010009027
(32) Priority Date :19/01/2010
(33) Name of priority country :Japan
(86) International Application No :PCT/JP2011/050565
Filing Date :14/01/2011
(87) International Publication No :WO 2011/089983
(61) Patent of Addition to Application Number :NA
Filing Date :NA
(62) Divisional to Application Number :NA
Filing Date :NA

(71)**Name of Applicant :**
1)Mitsubishi Electric Corporation
Address of Applicant :7 3 Marunouchi 2 chome Chiyoda ku Tokyo 1008310 Japan
(72)**Name of Inventor :**
1)KUBOTA Hitoshi

(57) Abstract :
Disclosed is a communication system provided with a first communication terminal a second communication terminal and a third communication terminal. The first communication terminal transmits to a plurality of communication terminals message data that is destined to the third communication terminal the second communication terminal receives the message data and forwards the received message data if the destination is confirmed not to be said terminal the third communication terminal receives the message data and if the destination is confirmed to be said terminal the third communication terminal transmits response data corresponding to the received message data to the first communication terminal that is the transmission source of the received message data. The transmission priority level of the response data is set higher than that of the forwarded message data and the amount of time from when the message data is received to when the corresponding response data is transmitted is shorter than the amount of time from when the message data is received to when the message data is forwarded.

No. of Pages : 30 No. of Claims : 5

(12) PATENT APPLICATION PUBLICATION
(19) INDIA
(22) Date of filing of Application :20/05/2009
(21) Application No.2816/CHENP/2009 A
(43) Publication Date : 21/03/2014

(54) Title of the invention : INJECTOR WITH AXIAL PRESSURE-COMPENSATING CONTROL VALVE

(51) International classification :F02M47/02,F02M63/00
(31) Priority Document No :10 2006 050 163.2
(32) Priority Date :25/10/2006
(33) Name of priority country :Germany
(86) International Application No :PCT/EP2007/058968
Filing Date :29/08/2007
(87) International Publication No :(WO 2008/049669)
(61) Patent of Addition to Application Number :NA
Filing Date :NA
(62) Divisional to Application Number :NA
Filing Date :NA

(71)**Name of Applicant :**
1)ROBERT BOSCH GMBH
Address of Applicant :POSTFACH 30 02 20,70442 STUTTGART Germany
(72)**Name of Inventor :**
1)ROSSIGNOL, FRANCOIS
2)AMELANG, STEPHAN
3)HOWEY, FRIEDRICH
4)CHARVET, OLIVIER
5)DUMONT, TONY

(57) Abstract :
The invention relates to an injector (1) for injecting fuel into combustion chambers. According to the invention, a valve piston (26) of a control valve (24) is provided with low pressure on both faces, wherein the valve piston (26) is arranged in a valve chamber (23) hydraulically connected to a control chamber (15) and is guided inside a sleeve (27) received in the valve chamber (23). The valve chamber (23) comprises a spring (29) supported on one end against the sleeve (27) and on the other end on the valve piston (26), the spring pressing the valve piston (26) onto a valve seat (32) and the sleeve (27) onto an opposing bottom surface. The valve piston diameter inside the sleeve (27) corresponds to the effective valve piston diameter at the valve seat (32).

No. of Pages : 15 No. of Claims : 10

(12) PATENT APPLICATION PUBLICATION
(19) INDIA
(22) Date of filing of Application :05/07/2012
(21) Application No.5931/CHENP/2012 A
(43) Publication Date : 21/03/2014

(54) Title of the invention : METHOD APPARATUS AND SYSTEM FOR SUPPLYING PULSED CURRENT TO A LOAD

(51) International classification :G06F1/26,H05B33/08
(31) Priority Document No :61/292,305
(32) Priority Date :05/01/2010
(33) Name of priority country :U.S.A.
(86) International Application No :PCT/US2010/061582
Filing Date :21/12/2010
(87) International Publication No :WO 2011/084805 A1
(61) Patent of Addition to Application Number :NA
Filing Date :NA
(62) Divisional to Application Number :NA
Filing Date :NA

(71)**Name of Applicant :**
1)3M INNOVATIVE PROPERTIES COMPANY
Address of Applicant :3M Center Post Office Box 33427 Saint Paul MN 55133 3427 U.S.A.
(72)**Name of Inventor :**
1)JESME Ronald D.

(57) Abstract :
Supplying pulsed current to a load involves repeatedly driving an electrical load between successive active and idle states via a regulator that includes a switched mode power supply. The regulator receives input current from a direct current power source and provides output current to at least an energy storage device in the idle states of the electrical load. The energy storage device is coupled to the load and the regulator. Output current is provided from both the regulator and the energy storage device to the electrical load in the active states of the electrical load. A storage capacity of the energy storage device is selected so that a duty cycle of the input current is greater than a duty cycle of the output current.

No. of Pages : 42 No. of Claims : 12

(12) PATENT APPLICATION PUBLICATION
(19) INDIA
(22) Date of filing of Application :06/08/2012
(21) Application No.6884/CHENP/2012 A
(43) Publication Date : 21/03/2014

(54) Title of the invention : ARYLMETHOXY ISOINDOLINE DERIVATIVES AND COMPOSITIONS COMPRISING AND METHODS OF USING THE SAME

(51) International classification :C07D401/04,C07D401/14,C07D407/12
(31) Priority Document No :61/303,618
(32) Priority Date :11/02/2010
(33) Name of priority country :U.S.A.
(86) International Application No :PCT/US2011/024269
Filing Date :10/02/2011
(87) International Publication No :WO 2011/100380
(61) Patent of Addition to Application Number :NA
Filing Date :NA
(62) Divisional to Application Number :NA
Filing Date :NA

(71)**Name of Applicant :**
1)CELGENE CORPORATION
Address of Applicant :86 Morris Avenue Summit NJ 07901 U.S.A.
(72)**Name of Inventor :**
1)MAN Hon Wah
2)MULLER George W.
3)RUCHELMAN Alexander
4)KHALIL Ehab M.
5)CHEN Roger Shen Chu
6)ZHANG Weihong

(57) Abstract :
Provided are 4 arylmethoxy isoindoline compounds and pharmaceutically acceptable salts solvates clathrates stereoisomers and prodrugs thereof. Methods of use and pharmaceutical compositions of these compounds are disclosed. The compounds are derivatives of hydroxy thalidomide active against cancer.

No. of Pages : 489 No. of Claims : 20

(12) PATENT APPLICATION PUBLICATION
(19) INDIA
(22) Date of filing of Application :12/09/2012
(21) Application No.7885/CHENP/2012 A
(43) Publication Date : 21/03/2014

(54) Title of the invention : IMAGE PROCESSING DEVICE IMAGE PROCESSING METHOD AND PROGRAM

(51) International classification :G09G5/00,G09G5/14
(31) Priority Document No :2010063574
(32) Priority Date :19/03/2010
(33) Name of priority country :Japan
(86) International Application No :PCT/JP2011/001405
Filing Date :10/03/2011
(87) International Publication No :WO 2011/114667
(61) Patent of Addition to Application Number :NA
Filing Date :NA
(62) Divisional to Application Number :NA
Filing Date :NA

(71)**Name of Applicant :**
1)SONY CORPORATION
Address of Applicant :1 7 1 Konan Minato ku Tokyo 1080075 Japan
(72)**Name of Inventor :**
1)KANEHIRA Daisuke

(57) Abstract :
Embodiments of the technology involve apparatus and methods for control of displaying of images. In an example an apparatus may include an image display a sensor to detect posture of the image display and a processor to control sequentially displaying images of a group of images on the image display based on changes in the detected posture. The processor may control a display of a posture indicator on the image display such that the indicator may represent a relation between a change in the detected posture and an image of the group of images. Optionally the indicator may be represented by a tilt meter. Moreover in some embodiments the sensor may be implemented with a gyroscopic sensor.

No. of Pages : 75 No. of Claims : 21

(12) PATENT APPLICATION PUBLICATION
(19) INDIA
(22) Date of filing of Application :27/09/2012
(21) Application No.8334/CHENP/2012 A
(43) Publication Date : 21/03/2014

(54) Title of the invention : LIQUID CRYSTAL DISPLAY DEVICE AND TELEVISION RECEIVING APPARATUS

(51) International classification :G02F1/133,G09G3/20,G09G3/34
(31) Priority Document No :2010080087
(32) Priority Date :31/03/2010
(33) Name of priority country :Japan
(86) International Application No :PCT/JP2011/057860
Filing Date :29/03/2011
(87) International Publication No :WO 2011/125661
(61) Patent of Addition to Application Number :NA
Filing Date :NA
(62) Divisional to Application Number :NA
Filing Date :NA

(71)**Name of Applicant :**
1)SHARP KABUSHIKI KAISHA
Address of Applicant :22 22 Nagaike cho Abeno ku Osaka shi Osaka 5458522 Japan
(72)**Name of Inventor :**
1)KOHASHIKAWA Seiji

(57) Abstract :
Disclosed is a liquid crystal display device (1) provided with a liquid crystal panel (13) for displaying an input video signal a backlight (10) for irradiating the liquid crystal panel a light source light emission control unit for controlling light emission of the backlight (10) and a region detection unit (11c) for detecting a parallel movement region (13T) that moves parallel within video shown by the input video signal. The parallel movement region (13T) means for example a region in which video is panned and scrolled and a telop region. The light source light emission control unit is exemplified by a control CPU (15) and a light source drive unit (16). The control CPU (15) performs light emission control of light emitting regions (10a 10g) by controlling the light source drive unit (16) the light emission control including intermittent control. Regarding the light emitting region (10g) corresponding to the parallel movement region (13T) the intermittent control is performed only on the light emitting region (10g) or performed on the light emitting region (10g) so that the light out period thereof becomes longer than those of the other light emitting regions (10a 10f).
Consequently regarding a display region having a high possibility that video breaks down the breakdown of the video can be prevented from being emphasized by the intermittent control of a light source.

No. of Pages : 42 No. of Claims : 8

(12) PATENT APPLICATION PUBLICATION
(19) INDIA
(22) Date of filing of Application :27/09/2012
(21) Application No.8335/CHENP/2012 A
(43) Publication Date : 21/03/2014

(54) Title of the invention : SHELF STABLE SAVORY FILLED FOOD PRODUCTS AND METHODS

(51) International classification :A21D13/00
(31) Priority Document No :61/309255
(32) Priority Date :01/03/2010
(33) Name of priority country :U.S.A.
(86) International Application No :PCT/US2011/026494
Filing Date :28/02/2011
(87) International Publication No :WO 2011/109300
(61) Patent of Addition to Application Number :NA
Filing Date :NA
(62) Divisional to Application Number :NA
Filing Date :NA

(71)**Name of Applicant :**
1)KRAFT FOODS GLOBAL BRANDS LLC
Address of Applicant :Three Lakes Drive Northfield IL 60093 U.S.A.
(72)**Name of Inventor :**
1)COLEMAN Edward C.
2)THULIN Daniera Z.
3)VEMULAPALLI Vani

(57) Abstract :
Shelf stable savory filled food products including at least two components having different textures and methods for making the food products are provided herein. The food products have a shelf life of at least about six months when stored at about 70°F in hermetically sealed film packaging. The savory filled food products have an intermediate water activity (e.g. about 0.5 to about 0.8) which promotes increased shelf life at room temperature.

No. of Pages : 42 No. of Claims : 23

(12) PATENT APPLICATION PUBLICATION
(19) INDIA
(22) Date of filing of Application :18/07/2012
(21) Application No.6325/CHENP/2012 A
(43) Publication Date : 21/03/2014

(54) Title of the invention : PHARMACEUTICAL COMPOSITION FOR TREATING A METABOLIC SYNDROME

(51) International classification :A61K38/18,A61K38/26,A61P3/00
(31) Priority Document No :10305070.4
(32) Priority Date :21/01/2010
(33) Name of priority country :EPO
(86) International Application No :PCT/EP2011/050793
Filing Date :21/01/2011
(87) International Publication No :WO 2011/089203 A1
(61) Patent of Addition to Application Number :NA
Filing Date :NA
(62) Divisional to Application Number :NA
Filing Date :NA

(71)**Name of Applicant :**
1)SANOFI
Address of Applicant :54 rue de la Botie F 75008 Paris France
(72)**Name of Inventor :**
1)SOMMERFELD Mark
2)SCHAEFER Hans Ludwig
3)BOSCHEINEN Oliver
4)HABERMANN Paul
5)RAO Ercole
6)DREYER Matthias

(57) Abstract :
The invention is directed to a pharmaceutical composition containing at least one FGF 21 (fibroblast growth factor 21) compound, at least one GLP 1R (glucagon - like peptide -1 receptor) agonist and optionally at least one anti - diabetic drug and/or at least one DPP 4 (dipeptidyl peptidase 4) inhibitor for the treatment of at least one metabolic syndrome and/or atherosclerosis in particular diabetes dyslipidemia obesity and/or adipositas.

No. of Pages : 26 No. of Claims : 16

(12) PATENT APPLICATION PUBLICATION
(19) INDIA
(22) Date of filing of Application :01/08/2012
(21) Application No.6757/CHENP/2012 A
(43) Publication Date : 21/03/2014

(54) Title of the invention : SURGE ARRESTER

(51) International classification :H01C7/12,H01C17/00
(31) Priority Document No :10152777.8
(32) Priority Date :05/02/2010
(33) Name of priority country :EPO
(86) International Application No :PCT/EP2011/051655
Filing Date :04/02/2011
(87) International Publication No :WO 2011/095590 A1
(61) Patent of Addition to Application Number :NA
Filing Date :NA
(62) Divisional to Application Number :NA
Filing Date :NA

(71)**Name of Applicant :**
1)ABB TECHNOLOGY AG
Address of Applicant :Affolternstrasse 44 CH 8050 Z¼rich Switzerland
(72)**Name of Inventor :**
1)GEBHARDT Lutz
2)EGGER Daniel
3)NEESER Daniel
4)SCH–N Dieter

(57) Abstract :
The invention relates to a surge arrester comprising an active part (12) two electrodes (14 16) applied to the active part and a connection element (18). The active part (12) and the electrodes (14 16) are arranged in the connection element (18). According to the invention the connection element (18) is produced in an injection moulding method or press moulding method and shrinks during the production thereof thereby firmly pressing the electrodes (14 16) onto the active part (12).

No. of Pages : 37 No. of Claims : 26

(12) PATENT APPLICATION PUBLICATION
(19) INDIA
(22) Date of filing of Application :28/09/2012
(21) Application No.8383/CHENP/2012 A
(43) Publication Date : 21/03/2014

(54) Title of the invention : CONTROL DEVICE FOR HYBRID VEHICLE

(51) International classification :B60W10/06,B60K6/44,B60K6/52
(31) Priority Document No :2010109950
(32) Priority Date :12/05/2010
(33) Name of priority country :Japan
(86) International Application No :PCT/JP2011/060104
Filing Date :26/04/2011
(87) International Publication No :WO 2011/142245
(61) Patent of Addition to Application Number :NA
Filing Date :NA
(62) Divisional to Application Number :NA
Filing Date :NA

(71)**Name of Applicant :**
1)HONDA MOTOR CO. LTD.
Address of Applicant :1 1 Minami Aoyama 2 chome Minato ku Tokyo 1078556 Japan
(72)**Name of Inventor :**
1)TASHIRO Yutaka

(57) Abstract :
When an engine (2) is stopped and a vehicle is at a standstill a travel control means (8a2) allows the vehicle to travel by means of the driving force of a rear motor (6) during a period from when the brake is released to when an acceleration demand determination means (8a1) determines that acceleration is demanded for the vehicle. During said period a start up speed determining means (8a4) determines the start up traveling speed when starting up the engine (2) on the basis of the load which is estimated by means of a load estimation means (8a3) on the basis of the current value supplied to the rear motor (6). When the traveling speed of the vehicle equals or exceeds said start up traveling speed the start up means (8a5) starts up the engine (2).

No. of Pages : 33 No. of Claims : 5

(12) PATENT APPLICATION PUBLICATION
(19) INDIA
(22) Date of filing of Application :26/09/2012
(21) Application No.8285/CHENP/2012 A
(43) Publication Date : 21/03/2014

(54) Title of the invention : FITTING CONFIRMATION CONSTRUCTION FOR CONNECTORS

(51) International classification :H01R13/627,H01R13/641,H01R12/79
(31) Priority Document No :2010080953
(32) Priority Date :31/03/2010
(33) Name of priority country :Japan
(86) International Application No :PCT/JP2011/058380
Filing Date :25/03/2011
(87) International Publication No :WO 2011/122688
(61) Patent of Addition to Application Number :NA
Filing Date :NA
(62) Divisional to Application Number :NA
Filing Date :NA

(71)**Name of Applicant :**
1)YAZAKI CORPORATION
Address of Applicant :4 28 Mita 1 chome Minato ku Tokyo 1088333 Japan
(72)**Name of Inventor :**
1)OHYAMA Kouichi

(57) Abstract :
In a fitting confirmation construction a lock arm is provided in a housing of a first connector. The lock arm includes a lock wall inclined and disposed at a front end of the lock arm in a direction from the first connector toward the second connector; a deflection space formed at a rear of the lock wall in the direction; and an operation plate disposed on the deflection space. A confirmation opening is provided in a rear wall of the housing and has a height equal to a height of the deflection space. A lock projection is provided on a second connector to be brought into engagement with the lock wall. A rear end face of the operation plate is exposed to a rear outside of the housing of the first connector through the confirmation opening only in a state where the lock arm is deflected.

No. of Pages : 31 No. of Claims : 4

(12) PATENT APPLICATION PUBLICATION
(19) INDIA
(22) Date of filing of Application :26/09/2012
(21) Application No.8286/CHENP/2012 A
(43) Publication Date : 21/03/2014

(54) Title of the invention : WIRELESS COMMUNICATION BETWEEN TWO TEMPORARILY CONNECTED DEVICES

(51) International classification :H04W8/00,G07B15/06
(31) Priority Document No :NA
(32) Priority Date :NA
(33) Name of priority country :NA
(86) International Application No :PCT/EP2010/052521
Filing Date :01/03/2010
(87) International Publication No :WO 2011/107136
(61) Patent of Addition to Application Number :NA
Filing Date :NA
(62) Divisional to Application Number :NA
Filing Date :NA

(71)**Name of Applicant :**
1)ABB RESEARCH LTD
Address of Applicant :Affolternstrasse 44 CH 8050 Z¼rich Switzerland
(72)**Name of Inventor :**
1)BALG…RD Lennart
2)ERICSSON Niclas
3)HANSEN Ewa
4)GIDLUND Mikael

(57) Abstract :
A system for setting up a wireless connection between two temporarily connected devices (10 12) comprises a device interconnector (14) having a first end (19) provided with a first wireless communication identifier and a second end (21) provided with a second wireless communication identifier a first device (10) having a first interconnector mating unit (23) a first wireless communication unit (28) and a first reading unit (26) and a second device (12) having a second interconnector mating unit (31) a second wireless communication unit (34) and a second reading unit (32). The wireless communication units of each device is configured to receive an identifier being read by the corresponding reading unit as the device interconnector is attached to the corresponding mating unit and the wireless communication unit is configured to employ this identifier in setting up together with the other wireless communication unit a wireless connection between the two devices.

No. of Pages : 36 No. of Claims : 18

(12) PATENT APPLICATION PUBLICATION
(19) INDIA
(22) Date of filing of Application :26/09/2012
(21) Application No.8287/CHENP/2012 A
(43) Publication Date : 21/03/2014

(54) Title of the invention : COMPOSITE SEMIPERMEABLE MEMBRANE

(51) International classification :B01D71/82,B01D69/12,B01D71/70
(31) Priority Document No :2010077003
(32) Priority Date :30/03/2010
(33) Name of priority country:Japan
(86) International Application No :PCT/JP2011/057637
Filing Date :28/03/2011
(87) International Publication No :WO 2011/122560
(61) Patent of Addition to Application Number :NA
Filing Date :NA
(62) Divisional to Application Number :NA
Filing Date :NA

(71)**Name of Applicant :**
1)TORAY INDUSTRIES INC.
Address of Applicant :1 1 Nihonbashi Muromachi 2 chome Chuo ku Tokyo 1038666 Japan
(72)**Name of Inventor :**
1)MINEHARA Hiroki
2)NAKATSUJI Koji

(57) Abstract :
Disclosed is a composite semipermeable membrane which comprises a separation function layer on a microporous supporting membrane and which is characterized in that the separation function layer is composed of a condensation product of a polymer that has an acidic group and a trialkoxysilane group having an imidazolium structure in side chains. The composite semipermeable membrane has excellent selective separation performance for divalent ions over monovalent ions while exhibiting excellent long term durability. Also disclosed is a method for producing the composite semipermeable membrane. The composite semipermeable membrane is suitable for uses in various water treatment fields such as the desalination of seawater and the production of drinking water. In addition the composite semipermeable membrane does not deteriorate as much as conventional composite semipermeable membranes even in cases where the membrane is sterilized by having chlorine containing raw water permeate therethrough continuously or intermittently.

No. of Pages : 17 No. of Claims : 3

(12) PATENT APPLICATION PUBLICATION
(19) INDIA
(22) Date of filing of Application :27/09/2012
(21) Application No.8300/CHENP/2012 A
(43) Publication Date : 21/03/2014

(54) Title of the invention : MEASURING ASSEMBLY FOR MEASURING A SPECTACLE FRAME

(51) International classification :G01B11/24,G02C13/00,B24B9/14
(31) Priority Document No :10 2010 010 340.3
(32) Priority Date :04/03/2010
(33) Name of priority country :Germany
(86) International Application No :PCT/EP2011/053150
Filing Date :03/03/2011
(87) International Publication No :WO 2011/107529
(61) Patent of Addition to Application Number :NA
Filing Date :NA
(62) Divisional to Application Number :NA
Filing Date :NA

(71)**Name of Applicant :**
1)SCHNEIDER GMBH & CO. KG
Address of Applicant :Br¼eckenstrasse 21 35239 Steffenberg Germany
(72)**Name of Inventor :**
1)SCHNEIDER Gunter
2)GERRATH Torsten
3)BOERNER Ulf

(57) Abstract :
The invention relates to a measuring assembly (1) for measuring an inside of a lens frame (2.1) of a spectacle frame (2) said lens frame at least partially delimiting an inscribed surface area F that corresponds to a lens shape comprising a holding device (3) for mounting the spectacle frame (2) at least one light source (4) for generating a light beam (4.1) to be projected on a region of the lens frame (2.1) to be evaluated and at least one sensor (5) that can be coupled to an evaluation unit (1.1) for detecting the reflected light beam (4.1) wherein the holding device (3) can be rotated about a rotational axis r and moved in the direction of a movement axis x and the movement axis x comprises at least one movement component in a direction perpendicular to the rotational axis r. The holding device (3) is used to fix the spectacle frame (2) by means of spectacle frame bows (2.2 2.3) wherein at least one free space (3.1 3.2) is provided in the region of the holding device (3) said free space being used to receive the spectacle frame bows (2.2 2.3) of a spectacle frame (2) to be held which are not folded in or cannot be folded in.

No. of Pages : 27 No. of Claims : 14

(12) PATENT APPLICATION PUBLICATION
(19) INDIA
(22) Date of filing of Application :19/09/2013

(21) Application No.1081/KOL/2013 A
(43) Publication Date : 21/03/2014

(54) Title of the invention : MULTI-MODE CONTINUOUSLY VARIABLE TRANSMISSION MECHANISM

(51) International classification	:F16H 55/00
(31) Priority Document No	:101134242
(32) Priority Date	:19/09/2012
(33) Name of priority country	:Taiwan
(86) International Application No	:NA
Filing Date	:NA
(87) International Publication No	: NA
(61) Patent of Addition to Application Number	:NA
Filing Date	:NA
(62) Divisional to Application Number	:NA
Filing Date	:NA

(71)**Name of Applicant :**
1)SANYANG INDUSTRY CO. LTD.
Address of Applicant :184 KENG TZU KOU, SHANG KENG VILLAGE, HSIN FONG SHIANG, HSINCHU, TAIWAN R.O.C.
(72)**Name of Inventor :**
1)CHEN WEI-YU
2)LU WEI-MING
3)CHOU MING-HSUAN
4)CHOU PO-YU

(57) Abstract :
A multi-mode continuously variable transmission mechanism includes an input shaft, a driving pulley assembly, an elastic element, a sliding block, and a switch module. The driving pulley assembly includes a fixed driving sheave, a sliding driving sheave, a ramp plate, and a plurality of rollers. When the input shaft is rotated, the plural rollers, through centrifugal force, will push the sliding driving sheave to move axially along the input shaft. The elastic element is arranged between the sliding driving sheave and the ramp plate. An end part of the sliding block is pierced through the ramp plate and touched the elastic element. The switch module is connected to the sliding block to control the movement of the sliding block. And the sliding block would change the amount of the compression of the elastic element. Therefore, the present invention could have two or more modes of continuously variable transmission mechanism without using the computer hardware and software with higher cost and more complex setting.

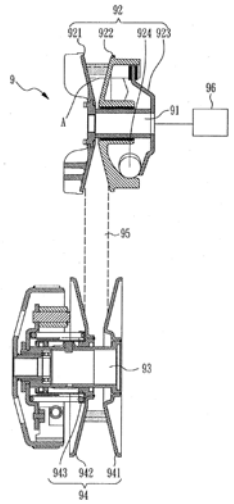

No. of Pages : 15 No. of Claims : 6

(12) PATENT APPLICATION PUBLICATION
(19) INDIA
(22) Date of filing of Application :20/01/2014

(21) Application No.135/KOLNP/2014 A
(43) Publication Date : 21/03/2014

(54) Title of the invention : DEMULTIPLEXING OF A PACKET-BASED TRANSPORT STREAM

(51) International classification :H04L1/00
(31) Priority Document No :11175784.5
(32) Priority Date :28/07/2011
(33) Name of priority country :EPO
(86) International Application No :PCT/EP2012/064611
Filing Date :25/07/2012
(87) International Publication No :WO 2013/014194
(61) Patent of Addition to Application Number :NA
Filing Date :NA
(62) Divisional to Application Number :NA
Filing Date :NA

(71)**Name of Applicant :**
1)FRAUNHOFER-GESELLSCHAFT ZUR FOERDERUNG DER ANGEWANDTEN FORSCHUNG E.V.
Address of Applicant :Hansastrasse 27c, 80686 München, GERMANY
(72)**Name of Inventor :**
1)MULL, Andreas
2)FORSTER, Christian
3)HILDINGER, Rainer
4)GERHAEUSER, Heinz

(57) Abstract :
The invention relates to a device for demultiplexing a packet based transport stream (14) of transport stream packets (12), which are each provided with a systematic forward error detection code, wherein the transport stream packets are each assigned to a data sink (20) of a plurality of data sinks (20), such that a data stream (36) of data packets (38) protected by means of a forward error detection code, which data stream is addressed to a particular data sink (20), is embedded into a useful data section of the transport stream packets that are assigned to the same data sink (20), wherein the device is designed to determine a probability value for each of the plurality of data sinks for a predetermined transport stream packet (12) that is erroneous according to the systematic forward error detection code, which probability value specifies the probability that the predetermined transport stream packet (12) is associated with the respective data sink (20), and to associate the predetermined transport stream packet to a selected data sink of the plurality of data sinks on the basis of the probability values for the plurality of data sinks.

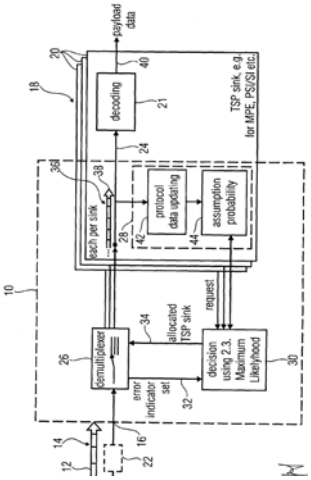

No. of Pages : 42 No. of Claims : 18

(12) PATENT APPLICATION PUBLICATION
(19) INDIA
(22) Date of filing of Application :20/01/2014

(21) Application No.141/KOLNP/2014 A
(43) Publication Date : 21/03/2014

(54) Title of the invention : DELIVERY OF VIRAL AGENTS

(51) International classification	:A61K35/76,A61K47/46,A61L15/36
(31) Priority Document No	:1110647.3
(32) Priority Date	:23/06/2011
(33) Name of priority country	:U.K.
(86) International Application No	:PCT/EP2012/062270
Filing Date	:25/06/2012
(87) International Publication No	:WO 2012/175749
(61) Patent of Addition to Application Number	:NA
Filing Date	:NA
(62) Divisional to Application Number	:NA
Filing Date	:NA

(71)**Name of Applicant :**
1)FIXED PHAGE LIMITED
Address of Applicant :4 Ballochmyle Way, Mauchline East Ayrshire KA5 6LA U.K.
(72)**Name of Inventor :**
1)CHADWICK, James
2)MATTEY, Michael

(57) Abstract :
Plant material has bacteriophage has been attached, wherein the bacteriophage retains infectivity. The plant material includes fruits, vegetables, leaves, stems, flowers, roots, tubers, seedlings and seeds. Plant diseases and animal diseases can be treated. A separate composition comprises a carrier selected from (i) a filament, (ii) a planar material, and (iii) particles and/or beads, and bacteriophage covalently attached thereto, wherein the bacteriophage retains infectivity, useful in treatment or prevention of bacterial infection in a deep wound.

No. of Pages : 45 No. of Claims : 24

(12) PATENT APPLICATION PUBLICATION
(19) INDIA
(22) Date of filing of Application :21/01/2014

(21) Application No.148/KOLNP/2014 A
(43) Publication Date : 21/03/2014

(54) Title of the invention : METHOD FOR PRODUCING PYRAZOLE COMPOUND

(51) International classification :C07D231/14
(31) Priority Document No :2011-138737
(32) Priority Date :22/06/2011
(33) Name of priority country :Japan
(86) International Application No :PCT/JP2012/065459
Filing Date :18/06/2012
(87) International Publication No :WO 2012/176717
(61) Patent of Addition to Application Number :NA
Filing Date :NA
(62) Divisional to Application Number :NA
Filing Date :NA

(71)**Name of Applicant :**
1)CENTRAL GLASS COMPANY, LIMITED.
Address of Applicant :5253, Oaza Okiube, Ube-shi, Yamaguchi 755-0001, JAPAN.
(72)**Name of Inventor :**
1)Masamune OKAMOTO
2)Hideaki IMURA
3)Naoto TAKADA

(57) Abstract :
A method for producing a pyrazole compound represented by general formula (5) of the invention comprises reacting a 2-acyl-3-aminoacrylic acid ester represented by general formula (1) and a hydrazine represented by general formula (4) in the presence of a base. (In the formula (1), R1, R2, R3 and R4 are each independently alkyl groups.) (In the formula (4), R5 is an alkyl or aryl group.) (In the formula (5), R1, R4, and R5 are the same as previously described.) By means of the production method, it is possible to produce, at a high yield and a high selectivity, a 1,3-disubstituted pyrazole-4-carboxylic acid ester that shows little discoloration.

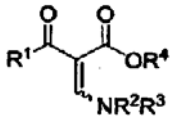
(1)


(4)

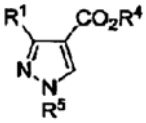
(5)

No. of Pages : 32 No. of Claims : 12

(12) PATENT APPLICATION PUBLICATION
(19) INDIA
(22) Date of filing of Application :17/01/2014

(21) Application No.115/KOLNP/2014 A
(43) Publication Date : 21/03/2014

(54) Title of the invention : RAILCAR DAMPING DEVICE

(51) International classification :B61F5/24,F16F15/02
(31) Priority Document No :2011-136163
(32) Priority Date :20/06/2011
(33) Name of priority country :Japan
(86) International Application No :PCT/JP2012/065606
Filing Date :19/06/2012
(87) International Publication No :WO 2012/176761
(61) Patent of Addition to Application Number :NA
Filing Date :NA
(62) Divisional to Application Number :NA
Filing Date :NA

(71)**Name of Applicant :**
1)KAYABA INDUSTRY CO., LTD.
Address of Applicant :World Trade Center Bldg., 4-1, Hamamatsu-cho 2- chome, Minato-ku, Tokyo 105-6111,Japan
(72)**Name of Inventor :**
1)OGAWA Takayuki
2)AOKI Jun
3)UCHIDA Masaru

(57) Abstract :
This railcar damping device (1) includes: a tank (7) storing a liquid that is supplied to and discharged from a cylinder (2) of an actuator; a first open/close valve (9) provided in and being capable of opening/closing a first passage (8) that connects a rod-side chamber (5) and a piston-side chamber (6) which are partitioned by a piston (3) inserted inside the cylinder (2); a second open/close valve (11) provided in and being capable of opening/closing a second passage (10) that connects the piston-side chamber (6) and the tank (7); a pump (12) that supplies the liquid from the tank (7) to the rod-side chamber (5); a motor (15) that rotates at a given rotation speed and that drives and rotates the pump (12); and a section determining unit (44c) that determines whether the type of the section in which the railcar is traveling is an open section or a tunnel section on the basis of the deviation in speed between the target rotation speed and the actual rotation speed of the motor (15).

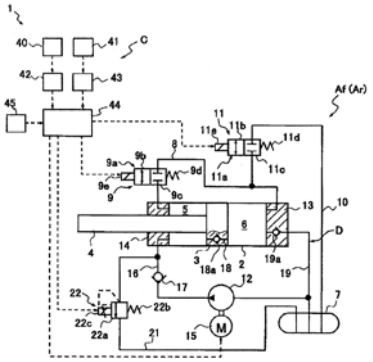

No. of Pages : 40 No. of Claims : 10

(12) PATENT APPLICATION PUBLICATION
(19) INDIA
(22) Date of filing of Application :21/01/2014

(21) Application No.146/KOLNP/2014 A
(43) Publication Date : 21/03/2014

(54) Title of the invention : SEPARATOR HAVING HEAT RESISTANT INSULATION LAYERS

(51) International classification :H01M2/16
(31) Priority Document No :2011-138983
(32) Priority Date :22/06/2011
(33) Name of priority country :Japan
(86) International Application No :PCT/JP2012/065100
Filing Date :13/06/2012
(87) International Publication No :WO 2012/176669
(61) Patent of Addition to Application Number :NA
Filing Date :NA
(62) Divisional to Application Number :NA
Filing Date :NA

(71)**Name of Applicant :**
1)NISSAN MOTOR CO., LTD.
Address of Applicant :2, Takara-cho, Kanagawa-ku Yokohama-shi, Kanagawa 221-0023, Japan
(72)**Name of Inventor :**
1)Hironobu MURAMATSU
2)Tamaki HIRAI
3)Kazuki MIYATAKE

(57) Abstract :
A separator (1) having heat resistant insulation layers, for electric devices, according to the present invention is provided with: a resin porous substrate (2); and heat resistant insulation layers (3) that are formed on both faces of the resin porous substrate, and that comprise heat resistant particles the melting point or thermal softening point of which is not less than 150°C. A parameter (X) indicated by numerical formula (1) has a value not less than 0.15. In this numerical formula, A and A are thicknesses (μm) of each of the heat resistant insulation layers (3) formed on both faces of the resin porous substrate (2), have a relationship of A ≥ A in this case, and C is the total thickness (μm) of the separator (1) having the heat resistant insulation layers.

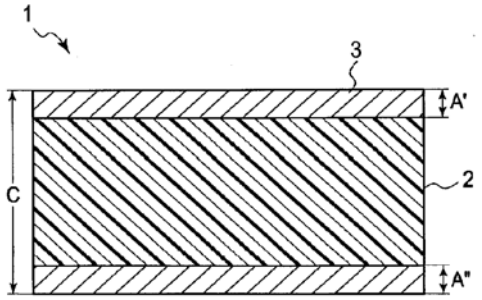

No. of Pages : 42 No. of Claims : 9

(12) PATENT APPLICATION PUBLICATION
(19) INDIA
(22) Date of filing of Application :23/01/2014
(21) Application No.161/KOLNP/2014 A
(43) Publication Date : 21/03/2014

(54) Title of the invention : SUPPORT MODULE FOR AN UNDERWATER ANTENNA, AND UNDERWATER ANTENNA HAVING A SUPPORT MODULE OF THIS KIND

(51) International classification :G10K 11/00
(31) Priority Document No :10 2011 113 811.4
(32) Priority Date :20/09/2011
(33) Name of priority country :Germany
(86) International Application No :PCT/EP2012/067935
Filing Date :13/09/2012
(87) International Publication No :WO 2013/041437
(61) Patent of Addition to Application Number :NA
Filing Date :NA
(62) Divisional to Application Number :NA
Filing Date :NA

(71)**Name of Applicant :**
1)ATLAS ELEKTRONIK GMBH
Address of Applicant :Sebaldsbrücker Heerstrasse 235, 28309 Bremen, GERMANY
(72)**Name of Inventor :**
1)JUNGE, Wilfried
2)MINSCHKE, Mike

(57) Abstract :
The invention relates to a support module 20 for an acoustic underwater antenna 4 having at least one electroacoustic and/or optoacoustic transducer element 32, wherein the support module 20 has a shaped piece, which is composed of at least two parts, for accommodating the transducer elements 32. The shaped piece has a central axial opening 38 for a traction cable to pass through and has at least one releasable connection between the parts of the shaped piece for opening or closing the support module 20. The invention also relates to an acoustic underwater antenna 4, in particular a towed antenna 4, having at least one above described support module 20, and also to a corresponding method for attaching a support module 20 of this kind to the traction cable of said underwater antenna 4.

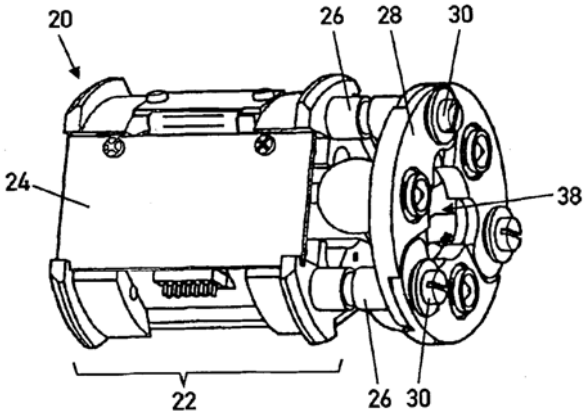

No. of Pages : 29 No. of Claims : 15

(12) PATENT APPLICATION PUBLICATION
(19) INDIA
(22) Date of filing of Application :24/01/2014

(21) Application No.170/KOLNP/2014 A
(43) Publication Date : 21/03/2014

(54) Title of the invention : LOCATION-BASED EMPLOYMENT SEARCH USING EMPLOYER AND CANDIDATE MOBILE COMMUNICATION DEVICES

(51) International classification :G06Q30/00,H04W4/02
(31) Priority Document No :61/509,437
(32) Priority Date :19/07/2011
(33) Name of priority country :U.S.A.
(86) International Application No :PCT/US2011/058436
Filing Date :28/10/2011
(87) International Publication No :WO 2013/012431
(61) Patent of Addition to Application Number :NA
Filing Date :NA
(62) Divisional to Application Number :NA
Filing Date :NA

(71)**Name of Applicant :**
1)INTUIT INC.
Address of Applicant :2700 Coast Avenue, Mountain View, California 94043 U.S.A.
(72)**Name of Inventor :**
1)THOMAS, Mark A.

(57) Abstract :
Computer-implemented methods, systems and computer program products or applications for location-based, mobile-to-mobile connection of employers and candidates, while providing employers and candidates the ability to search for matching profiles and coordinate with each other in real time while utilizing their mobile communication devices to meet each other immediately or at a later time. Search results also indicate a distance between current locations of employer and candidates as determined from location data of their mobile communication devices and/or a distance between a candidate's residence and job location. Such location data enables employers and candidates to assess the ability to meet now or at a later time given their current locations and the ability of a candidate to travel to a job location given the candidate's residence location.

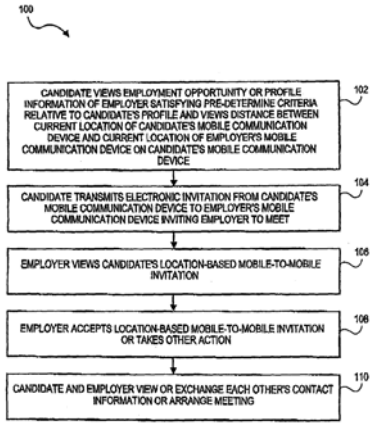

No. of Pages : 70 No. of Claims : 40

(12) PATENT APPLICATION PUBLICATION
(19) INDIA
(22) Date of filing of Application :12/09/2013

(21) Application No.1062/KOL/2013 A
(43) Publication Date : 21/03/2014

(54) Title of the invention : OUTLET FITTING, BASIC BODY AND OUTLET BODY THEREFOR

(51) International classification :E03C 1/00
(31) Priority Document No :102012216428.6
(32) Priority Date :14/09/2012
(33) Name of priority country :Germany
(86) International Application No :NA
Filing Date :NA
(87) International Publication No : NA
(61) Patent of Addition to Application Number :NA
Filing Date :NA
(62) Divisional to Application Number :NA
Filing Date :NA

(71)**Name of Applicant :**
1)HANSGROHE SE
Address of Applicant :AUESTRASSE 5-9 77761 SCHILTACH, GERMANY
(72)**Name of Inventor :**
1)STEFAN ARMBRUSTER
2)JOACHIM BLATTNER
3)ULRICH KINLE
4)HUBERT MOOSMANN

(57) Abstract :
The invention relates to an outlet fitting for discharging a fed liquid, in particular to a sanitary fitting, having a basic body (1), which has a connection for connecting to a liquid supply, and an outlet body (3), which is connected there to. In the case of an outlet fitting according to the invention, the outlet body is designed as a liquid container which is removable from the basic body. Use, for example, for washbasin fittings and sink fittings in sanitary technology.

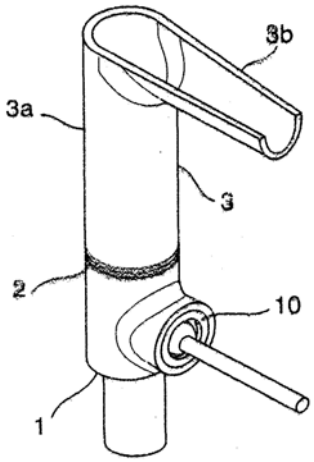

No. of Pages : 25 No. of Claims : 14

(12) PATENT APPLICATION PUBLICATION
(19) INDIA
(22) Date of filing of Application :20/01/2014
(21) Application No.142/KOLNP/2014 A
(43) Publication Date : 21/03/2014

(54) Title of the invention : ORTHODONTIC TOOTHBRUSH

(51) International classification :A46B5/00,A46B9/04,A46B9/02
(31) Priority Document No :13/165,169
(32) Priority Date :21/06/2011
(33) Name of priority country :U.S.A.
(86) International Application No:PCT/US2012/043496
Filing Date :21/06/2012
(87) International Publication No :WO 2012/177841
(61) Patent of Addition to Application Number :NA
Filing Date :NA
(62) Divisional to Application Number :NA
Filing Date :NA

(71)**Name of Applicant :**
1)STOFKO, Joseph, A.
Address of Applicant :602 St. Lawrence Lane, Gibsonia, PA 15044 U.S.A.
(72)**Name of Inventor :**
1)STOFKO, Joseph, A.

(57) Abstract :
An orthodontic toothbrush (8) comprising a handle (10), an attached head (12), and a plurality of bristles (26, 28, 30, 32, 48). The bristles define at least one well (22) having the shorter length bristles at the center or bottom of the well and relatively longer length bristles bordering the wells (26, 30, 32, 48). The wells are preferably spaced at the average distance between orthodontic braces. A plurality of bristles (48) off the longitudinal plane of the toothbrush head are angled or slanted toward the toothbrush head median longitudinal plane (20), while another plurality of bristles (26, 28, 30, 32) are perpendicular to the toothbrush head plane. The well accommodates an orthodontic bracket or brace wherein the shortest bristles in the well clean the archwire and face of the orthodontic bracket and the relatively longer bristles clean under the wings of the bracket, the sides and rear of brackets and the teeth.

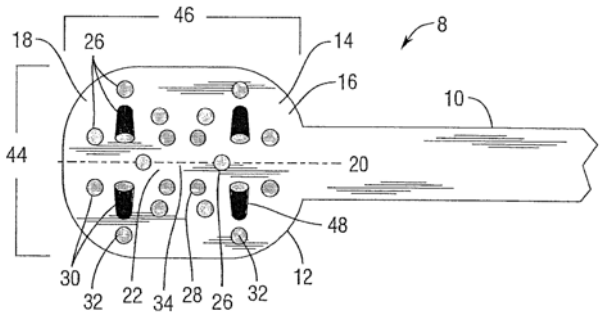

No. of Pages : 20 No. of Claims : 20

(12) PATENT APPLICATION PUBLICATION
(19) INDIA
(22) Date of filing of Application :20/03/2013
(21) Application No.320/KOL/2013 A
(43) Publication Date : 21/03/2014

(54) Title of the invention : METHOD AND SYSTEM FOR AUTOMATICALLY ADJUSTING TELEVISION VOLUME, TELEVISION SET AND TELEVISION REMOTE CONTROLLER

(51) International classification :H03G3/00
(31) Priority Document No :201210343847.0
(32) Priority Date :14/09/2012
(33) Name of priority country :China
(86) International Application No :NA
Filing Date :NA
(87) International Publication No : NA
(61) Patent of Addition to Application Number :NA
Filing Date :NA
(62) Divisional to Application Number :NA
Filing Date :NA

(71)**Name of Applicant :**
1)QUATIUS LIMITED
Address of Applicant :UNITS 05-07, 16/F, GREENFIELD TOWER, CONCORDIA PLAZA, 1 SCIENCE MUSEUM ROAD, TST EAST, KLN., HONG KONG, P.R. Hongkong(China)
(72)**Name of Inventor :**
1)CHEUNG, KA WING

(57) Abstract :
A method and system for automatically adjusting television volume, and a television set or a remote controller are disclosed. In the method and system, it judges whether the environmental sound surrounding the television includes the same sound component with a preset phone ringing, and thereby identifies whether there is an incoming call when the user is watching television, and if there is an incoming call, an operation of reducing television volume is automatically performed, without the users manual operation of reducing the TV volume. When receiving a call when watching TV, the user does not need to find a remote controller and look for the phone, which brings great convenience for the user. The system can be provided on the television, and can also be provided on a television remote controller or a controller, to automatically adjust the television volume according to the phone ringing.

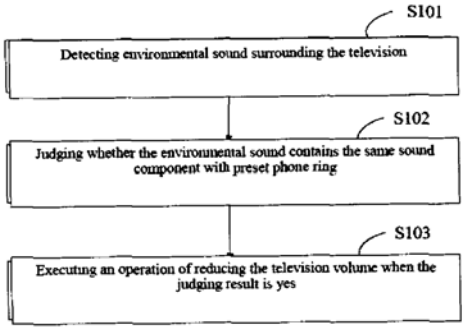

No. of Pages : 27 No. of Claims : 14

(12) PATENT APPLICATION PUBLICATION
(19) INDIA
(22) Date of filing of Application :07/04/1998

(21) Application No.604/CAL/1998 A
(43) Publication Date : 21/03/2014

(54) Title of the invention : TRIP MECHANISM FOR AN OVERLOAD RELAY

(51) International classification	:H01H 71/68
(31) Priority Document No	:08/838,904
(32) Priority Date	:11/04/1997
(33) Name of priority country	:U.S.A.
(86) International Application No	:NA
Filing Date	:NA
(87) International Publication No	: NA
(61) Patent of Addition to Application Number	:NA
Filing Date	:NA
(62) Divisional to Application Number	:NA
Filing Date	:NA

(71)**Name of Applicant :**
1)SIEMENS ENERGY & AUTOMATION, INC.
Address of Applicant :3333 OLD MILTON PARKWAY ALPHARETTA, GA U.S.A.
(72)**Name of Inventor :**
1)CHRISTIAN HENRY PASSOW

(57) Abstract :
Simplicity and reliability in a trip mechanism for an overload relay is achieved in a construction including a housing containing a bistable armature mounted on a pivot for movement between two stable positions. Fixed contacts are located within the housing and moveable contacts are carried by the armature for movement to a closed position with the fixed contacts for one of the two stable positions and for movement to an open position relative to the fixed contacts for the other of the two stable positions. A latch arm is carried by the armature and has a latch surface thereon. A torsion spring is mounted on the housing and has a latch finger for engaging the latch surface and retaining the armature in one of the two positions. A push button is provided for disabling the latch finger.

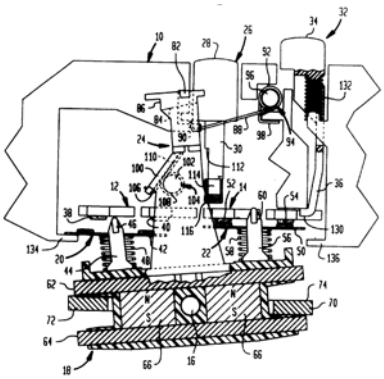

No. of Pages : 35 No. of Claims : 28

(12) PATENT APPLICATION PUBLICATION
(19) INDIA
(22) Date of filing of Application :16/01/2014
(21) Application No.104/KOLNP/2014 A
(43) Publication Date : 21/03/2014

(54) Title of the invention : SYNTHETIC FIBER

(51) International classification :D01F6/60,B60R21/23,D03D1/02
(31) Priority Document No :NA
(32) Priority Date :NA
(33) Name of priority country :NA
(86) International Application No :PCT/JP2011/078339
Filing Date :07/12/2011
(87) International Publication No :WO 2013/084322
(61) Patent of Addition to Application Number :NA
Filing Date :NA
(62) Divisional to Application Number :NA
Filing Date :NA

(71)**Name of Applicant :**
1)Asahi Kasei Fibers Corporation
Address of Applicant :3-23, Nakanoshima 3-chome, Kita-ku, Osaka-shi, Osaka 5308205, Japan
(72)**Name of Inventor :**
1)ISE, Fumiaki
2)MIZUNO, Shingo

(57) Abstract :
The purpose of the present invention is to provide a synthetic fiber which is for use in fabrics having uniform fiber density, permeability and the like, is appropriate for high-density, high-speed weaving, and exhibits excellent weft insertion stability. This synthetic fiber is characterized by having: a fiber density of 200-720 dtex; an average intermediate loading modulus of more than 75 cN/dtex and less than 150 cN/dtex; and a variation coefficient of the intermediate modulus of 5% or less.

No. of Pages : 51 No. of Claims : 14

(12) PATENT APPLICATION PUBLICATION
(19) INDIA
(22) Date of filing of Application :17/01/2014

(21) Application No.121/KOLNP/2014 A
(43) Publication Date : 21/03/2014

(54) Title of the invention : APPARATUS AND METHOD FOR BEAMFORMING IN WIRELESS COMMUNICATION SYSTEM

(51) International classification :H04B7/04,H01Q3/26
(31) Priority Document No :10-2011-0074971
(32) Priority Date :28/07/2011
(33) Name of priority country :Republic of Korea
(86) International Application No :PCT/KR2012/005976
Filing Date :26/07/2012
(87) International Publication No :WO 2013/015636
(61) Patent of Addition to Application Number :NA
Filing Date :NA
(62) Divisional to Application Number :NA
Filing Date :NA

(71)**Name of Applicant :**
1)SAMSUNG ELECTRONICS CO., LTD.
Address of Applicant :129, Samsung-ro Yeongtong-gu, Suwon-si, Gyeonggi-do 443-742,Republic of Korea
(72)**Name of Inventor :**
1)KIM, Yung- Soo

(57) Abstract :
An apparatus and a method for generating a frame for communication using beamforming in a wireless communication system are provided. A method for transmitting a signal in a transmitting stage includes determining a beam change time of a region for transmitting information in a frame, and transmitting the information to a receiving stage over the region for transmitting the information by considering the beam change time. The frame includes a plurality of regions divided based on a type of the information transmitted to the receiving stage, and the plurality of the regions includes different beam change times.

No. of Pages : 43 No. of Claims : 14

(12) PATENT APPLICATION PUBLICATION
(19) INDIA
(22) Date of filing of Application :23/01/2014

(21) Application No.160/KOLNP/2014 A
(43) Publication Date : 21/03/2014

(54) Title of the invention : A VEHICLE

(51) International classification	:B62K5/00,B60G15/06,B60G21/073
(31) Priority Document No	:1111638.1
(32) Priority Date	:07/07/2011
(33) Name of priority country	:U.K.
(86) International Application No	:PCT/GB2012/051519
Filing Date	:29/06/2012
(87) International Publication No	:WO 2013/005007
(61) Patent of Addition to Application Number	:NA
Filing Date	:NA
(62) Divisional to Application Number	:NA
Filing Date	:NA

(71)**Name of Applicant :**
1)GALE, David Andrew
Address of Applicant :31a Rosedene Avenue, Streatham Hill, London SW16 2LS, U.K.
(72)**Name of Inventor :**
1)GALE, David Andrew

(57) Abstract :
There is provided a vehicle comprising a chassis, two surface-engaging front wheels, at least one surface-engaging rear wheel and a propulsion unit for driving either the front wheels or the rear wheel or wheels. Each front wheel being connected to the chassis by means of a front wheel support assembly, wherein the front wheel support assembly comprises a hydraulic cylinder associated with each front wheel. Each hydraulic cylinder comprises a housing connected to one of the chassis and the front wheel support assembly, and a piston connected to the other of the front wheel support assembly and the chassis. The piston is moveable within the housing and arranged to divide the hydraulic cylinder into first and second chambers each having respective ports arranged to allow hydraulic fluid to enter and exit the respective chamber, the ports of the first chambers of each hydraulic cylinder being in fluid communication and the ports of the second chambers of each hydraulic cylinder being in fluid communication such that movement of hydraulic fluid from the first or second chamber of one hydraulic cylinder to the respective first or second chamber of the other hydraulic cylinder displaces the pistons of the hydraulic cylinders in opposing directions relative to the respective housings to enable the vehicle to tilt.

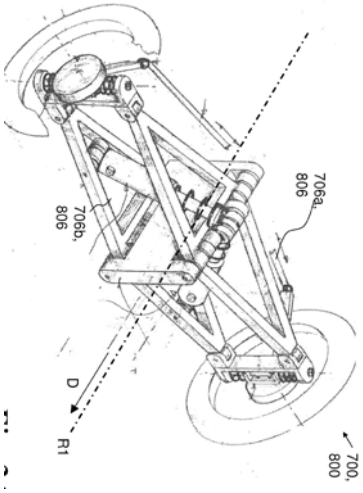

No. of Pages : 71 No. of Claims : 64

(12) PATENT APPLICATION PUBLICATION
(19) INDIA
(22) Date of filing of Application :27/08/2013

(21) Application No.992/KOL/2013 A
(43) Publication Date : 21/03/2014

(54) Title of the invention : SYSTEM AND METHOD FOR ELECTRONIC TEXT COMMUNICATION

(51) International classification	:H04W 4/00
(31) Priority Document No	:13/622,250
(32) Priority Date	:18/09/2012
(33) Name of priority country	:U.S.A.
(86) International Application No	:NA
Filing Date	:NA
(87) International Publication No	: NA
(61) Patent of Addition to Application Number	:NA
Filing Date	:NA
(62) Divisional to Application Number	:NA
Filing Date	:NA

(71)**Name of Applicant :**
1)INTUIT INC.
Address of Applicant :2700 COAST AVENUE, MOUNTAIN VIEW, CA 94043 U.S.A.
(72)**Name of Inventor :**
1)NAMBIAR GOPI KRISHNAN
2)RAMARATHNAM SRIVIDHYA
3)NELDURG VENKATESH B.
4)BHATIA GAURAV

(57) Abstract :
Asystem and method for electronic text communication in an environment in which SMS (Short Messaging Service) messages, MMS (Multimedia Messaging Service) messages and/or other messages are delivered with a non-actionable reply-to field. Illustratively, a regulation may require the field to be alphabetic or alphanumeric, thereby preventing it from simply being a telephone number to which a response can be transmitted. Therefore, when an organization generates a message, it includes its address in the body of the message (e.g., at the top and/or bottom). Although the user cannot respond directly to the reply-to field, he easily finds a telephone number to which a reply can be sent. A user may be advised of terms of service of a text-based service, and may be given a summary of the terms, before being deemed to have opted in to the service.

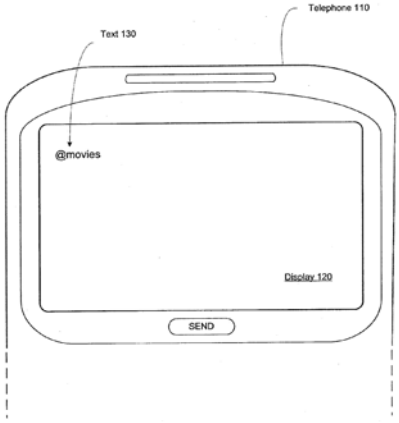

No. of Pages : 28 No. of Claims : 20

(12) PATENT APPLICATION PUBLICATION
(19) INDIA
(22) Date of filing of Application :17/01/2014
(21) Application No.120/KOLNP/2014 A
(43) Publication Date : 21/03/2014

(54) Title of the invention : DOMESTIC APPLIANCE, SUCH AS A WASHING MACHINE, HAVING A FLOW OF LIQUID, SUCH AS SUDS, ON A TUBULAR HEATING BODY

(51) International classification :D06F39/04
(31) Priority Document No :10 2011 081 019.6
(32) Priority Date :16/08/2011
(33) Name of priority country :Germany
(86) International Application No :PCT/EP2012/065538
Filing Date :08/08/2012
(87) International Publication No :WO 2013/023973
(61) Patent of Addition to Application Number :NA
Filing Date :NA
(62) Divisional to Application Number :NA
Filing Date :NA

(71)**Name of Applicant :**
1)BSH BOSCH UND SIEMENS HAUSGER„TE GMBH
Address of Applicant :Carl-Wery-Str. 34, 81739, München,GERMANY
(72)**Name of Inventor :**
1)PETERS, Bert
2)REICHNER,Holger
3)SCHÖNE,Oliver

(57) Abstract :
The invention relates to a domestic appliance, preferably designed as a washing machine, washer-dryer, or the like, comprising a washing drum (2), which can be rotated about an axis (1) oriented substantially horizontally and which is located in a suds container (3) that surrounds the washing drum (2) substantially on all sides, wherein a tubular heating body having heating tubes (7, 7) is located in a region between a cylinder (4) of the drum (2) extending in a circumferential direction and a lower wall of the suds container (3) to be regarded as the bottom (5), wherein the tubular heating body is surrounded by a liquid (8), such as suds, at least during operation of the domestic appliance, wherein said liquid (8) preferably can be heated by the tubular heating body in predetermined operation phases and a flow (9) is formed in the liquid (8), and wherein from case to case a stream plate (10) can be inserted between the tubular heating body and the bottom of the suds container, wherein the stream plate (10) is designed in such a way that part of the flow of the liquid (8) can be blocked in a region (13, 13) below the heating tubes (7, 7) and can be diverted into a region in which the heating tubes (7, 7) are located.

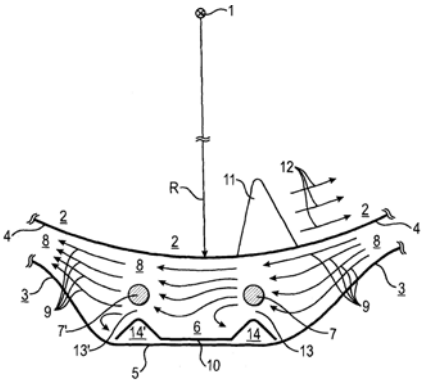

No. of Pages : 18 No. of Claims : 14

(12) PATENT APPLICATION PUBLICATION
(19) INDIA
(22) Date of filing of Application :20/01/2014
(21) Application No.132/KOLNP/2014 A
(43) Publication Date : 21/03/2014

(54) Title of the invention : ROOTS PUMP

(51) International classification :F04C18/12,F04C23/00
(31) Priority Document No :202011104491.6
(32) Priority Date :17/08/2011
(33) Name of priority country :Germany
(86) International Application No :PCT/EP2012/065406
Filing Date :07/08/2012
(87) International Publication No :WO 2013/023954
(61) Patent of Addition to Application Number :NA
Filing Date :NA
(62) Divisional to Application Number :NA
Filing Date :NA

(71)**Name of Applicant :**
1)OERLIKON LEYBOLD VACUUM GMBH
Address of Applicant :Bonner Strasse 498, 50968 Köln, GERMANY
(72)**Name of Inventor :**
1)BIRCH, Peter
2)DREIFERT, Thomas
3)JENTKINS, Robert
4)TUNNA, Clive

(57) Abstract :
A Roots pump has a plurality of multiple tooth rotary piston pairs (10, 48, 49) which form in each case one pump stage (50, 52, 54, 56, 58, 60). Adjacent pump stages (50, 52, 54, 56, 58, 60) are connected to one another via connecting ducts (30, 34, 77, 84, 86, 88, 90). In order to reduce the production costs, it is provided according to the invention to arrange the connecting ducts (30, 34, 77, 84, 86, 88, 90) in intermediate walls (74, 76, 78, 80, 82) which separate adjacent pump stages (50, 52, 54, 56, 58, 60) from one another.

No. of Pages : 18 No. of Claims : 9

(12) PATENT APPLICATION PUBLICATION
(19) INDIA
(22) Date of filing of Application :08/08/2002
(21) Application No.IN/PCT/2002/1018/KOL A
(43) Publication Date : 21/03/2014

(54) Title of the invention : A COMPUTERIZED MDICAL DIAGNOSTIC SYSTEM

(51) International classification :C06F 19/00
(31) Priority Document No :60/182,176
(32) Priority Date :14/02/2000
(33) Name of priority country :U.S.A.
(86) International Application No :PCT/US2001/04907
Filing Date :14/02/2001
(87) International Publication No :WO 2001/61616
(61) Patent of Addition to Application Number :NA
Filing Date :NA
(62) Divisional to Application Number :NA
Filing Date :NA

(71)**Name of Applicant :**
1)FIRST OPINION CORPORATION
Address of Applicant :8258 PRESTWICK DRIVE, LA JOLLA CA U.S.A.
(72)**Name of Inventor :**
1)ILIFF, EDWIN, C.

(57) Abstract :
The system includes arranging diseases, symptoms, and questions into a set of related disease,symptom, and question structures, such as objects or lists, in such a way that the structures can be processed to generate a dialogue with a patient. The structure based system organizes medical knowledge into formal structures and then executes those structures on a structure engine to automatically select the next question. Patient responses to the questions lead to more questions and ultimately to a diagnosis. The system comprises a computer which is provided with a list of diseases, each disease associated with a list of symptoms. The computer is configured for selecting one of the symptoms to be a focus symptom based on a predetermined criteria and for evaluating the focus symptom to establish the symptom, the established symptom contributing a weight to the diseases having the established symptom. The system is additionally adapted for selecting one of the symptoms to be a focus symptom from the list of symptoms associated with a selected one of the diseases and for evaluating the focus symptom to establish the symptom, the established symptom contributing a weight to at least the selected disease having the established symptom. The computer is further configured for repeating the selection and evaluation of the focus symptoms until the accumulated weights for a disease reach or pass a threshold so as to declare a diagnosis.

No. of Pages : 114 No. of Claims : 16

(12) PATENT APPLICATION PUBLICATION
(19) INDIA
(22) Date of filing of Application :23/01/2014
(21) Application No.159/KOLNP/2014 A
(43) Publication Date : 21/03/2014

(54) Title of the invention : SEPARATOR HAVING HEAT-RESISTANT INSULATING LAYER AND ELECTRIC DEVICE COMPRISING THE SAME

(51) International classification :H01M2/16,H01G9/02
(31) Priority Document No :2011-143348
(32) Priority Date :28/06/2011
(33) Name of priority country :Japan
(86) International Application No :PCT/JP2012/065858
Filing Date :21/06/2012
(87) International Publication No :WO 2013/002116
(61) Patent of Addition to Application Number :NA
Filing Date :NA
(62) Divisional to Application Number :NA
Filing Date :NA

(71)**Name of Applicant :**
1)NISSAN MOTOR CO., LTD.
Address of Applicant :2, Takara-cho, Kanagawa-ku Yokohama-shi, Kanagawa 221-0023, Japan
(72)**Name of Inventor :**
1)Takashi HONDA
2)Tamaki HIRAI
3)Hironobu MURAMATSU

(57) Abstract :
This separator having a heat-resistant insulating layer is provided with: a porous resin base layer; and a heat-resistant insulating layer that is formed on one surface or both surfaces of the porous resin base layer and contains inorganic particles and a binder. The porous resin base layer contains a resin that has a melting temperature of 120-200°C, and this separator having a heat-resistant insulating layer is configured such that the weight per square meter of the heat-resistant insulating layer/the weight per square meter of the porous resin base layer is 0.5 or more. Consequently, this separator having a heat resistant insulating layer exhibits excellent thermal shrinkage resistance, while ensuring a shut down function.

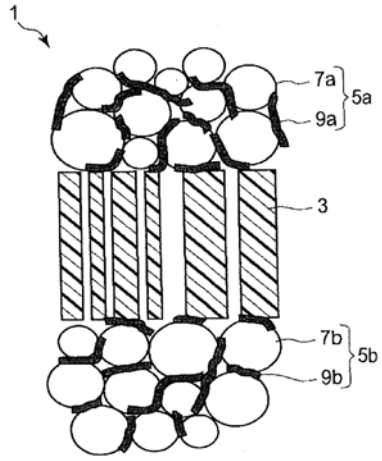

No. of Pages : 34 No. of Claims : 10

(12) PATENT APPLICATION PUBLICATION
(19) INDIA
(22) Date of filing of Application :18/03/2013

(21) Application No.308/KOL/2013 A
(43) Publication Date : 21/03/2014

(54) Title of the invention : TRANSMISSION APPARATUS AND VEHICLE

(51) International classification :F16H61/26
(31) Priority Document No :2012-203308
(32) Priority Date :14/09/2012
(33) Name of priority country :Japan
(86) International Application No :NA
Filing Date :NA
(87) International Publication No : NA
(61) Patent of Addition to Application Number :NA
Filing Date :NA
(62) Divisional to Application Number :NA
Filing Date :NA

(71)**Name of Applicant :**
1)YAMAHA HATSUDOKI KABUSHIKI KAISHA
Address of Applicant :2500 SHINGAI,IWATA-SHI, SHIZUOKA-KEN, 438-8501, Japan
(72)**Name of Inventor :**
1)SHOUJI SHIBASAKI

(57) Abstract :
A transmission apparatus comprises, first gears each having a dog hole are mounted relatively rotatable on a driven shaft. A rail collar is mounted not relatively rotatably on the driven shaft. A selector has a dog tooth and is spline-connected to the rail collar while remaining not relatively rotatably relative to the rail collar but movable in the axial direction. The second gears are mounted not relatively rotatably on the drive shaft and engaged with the respective first gears. When the dog tooth of the selector is engaged with the dog hole of the first gear, a part of the first gear that is engaged with the second gear and a part of the selector that is engaged with the rail collar are overlapped in the diameter direction.

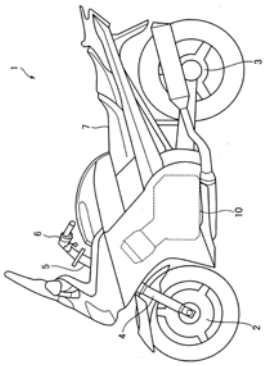

No. of Pages : 28 No. of Claims : 9

(12) PATENT APPLICATION PUBLICATION
(19) INDIA
(22) Date of filing of Application :11/04/2013

(21) Application No.405/KOL/2013 A
(43) Publication Date : 21/03/2014

(54) Title of the invention : MECHANICAL PENCIL

(51) International classification	:B43K 24/00
(31) Priority Document No	:2012-203980
(32) Priority Date	:18/09/2012
(33) Name of priority country	:Japan
(86) International Application No	:NA
Filing Date	:NA
(87) International Publication No	: NA
(61) Patent of Addition to Application Number	:NA
Filing Date	:NA
(62) Divisional to Application Number	:NA
Filing Date	:NA

(71)**Name of Applicant :**
1)MICRO CO., LTD
Address of Applicant :9-17, KAMATAHONCHO 2-CHOME, OHTA-KU, TOKYO, Japan
(72)**Name of Inventor :**
1)HOSOYA TOMOHIRO
2)OHKOUCHI AKIHIRO

(57) Abstract :
A mechanical pencil in which a lead can be rotated by operation of a touch button. A holder (33) is disposed in a barrel (1). A rotative pipe (18) having a writing mechanism assembly (19) incorporated therein is attached rotatably to the holder. Around the periphery of the holder, a slide member (46) is disposed movably back and forth, and the slide member is moved by the touch button (40) disposed on the barrel. The holder houses a sleeve (54) which is moved forward by the slide member and rotates in a circumferential direction. On each of a front end face of the sleeve and a rear end face of the rotative pipe, a rotation-transmitting cam face, (57, 32) is disposed. By the movement of the sleeve, cam faces are engaged with each other to rotate the rotative pipe, whereby the lead is rotated.

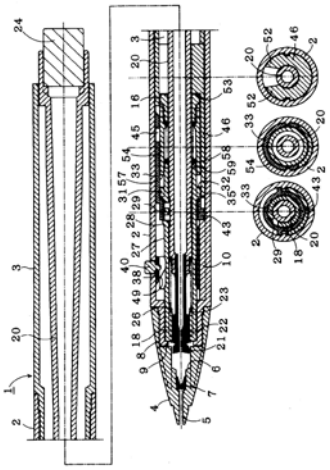

No. of Pages : 24 No. of Claims : 7

(12) PATENT APPLICATION PUBLICATION
(19) INDIA
(22) Date of filing of Application :21/01/2014

(21) Application No.147/KOLNP/2014 A
(43) Publication Date : 21/03/2014

(54) Title of the invention : INTAKE DEVICE FOR INTERNAL COMBUSTION ENGINE WITH SUPERCHARGER

(51) International classification :F02B37/00,F02B37/16,F02M25/07
(31) Priority Document No :2011-138414
(32) Priority Date :22/06/2011
(33) Name of priority country :Japan
(86) International Application No :PCT/JP2012/053478
Filing Date :15/02/2012
(87) International Publication No :WO 2012/176490
(61) Patent of Addition to Application Number :NA
Filing Date :NA
(62) Divisional to Application Number :NA
Filing Date :NA

(71)**Name of Applicant :**
1)NISSAN MOTOR CO., LTD.
Address of Applicant :2, Takara-cho, Kanagawa-ku, Yokohama-shi, Kanagawa 221-0023, Japan
(72)**Name of Inventor :**
1)Daisuke TAKAKI

(57) Abstract :
A compressor (5) for a turbo supercharger (3) is positioned between an airflow meter (12) and a throttle valve (13). An EGR passage (21) is connected to an air intake passage (10) at a convergence point (22) upstream from the compressor (5). The air intake passage capacity (V1) from the airflow meter (12) to the convergence point (22), the air intake passage capacity (V2) from the compressor (5) to the throttle valve (13), and the maximum boost pressure (Pb) under operating conditions whereby EGR is introduced are set so as to fulfill the relationship in formula (1), such that new air including EGR gas does not blow back up to the airflow meter (12) even at the maximum boost pressure (Pb).

$$V_1 > V_2 \times \left(\frac{P_b - P_1}{P_1} \right) \times \left(\frac{P_1}{P_b} \right)^{\frac{\kappa - 1}{\kappa}} \quad (1)$$

No. of Pages : 20 No. of Claims : 5

(12) PATENT APPLICATION PUBLICATION
(19) INDIA
(22) Date of filing of Application :21/01/2014
(21) Application No.154/KOLNP/2014 A
(43) Publication Date : 21/03/2014

(54) Title of the invention : MANAGING NOTIFICATION MESSAGES

(51) International classification :H04W4/20,H04W4/12,H04W4/00
(31) Priority Document No :13/195,772
(32) Priority Date :01/08/2011
(33) Name of priority country :U.S.A.
(86) International Application No :PCT/US2012/048801
Filing Date :30/07/2012
(87) International Publication No :WO 2013/019708
(61) Patent of Addition to Application Number :NA
Filing Date :NA
(62) Divisional to Application Number :NA
Filing Date :NA

(71)**Name of Applicant :**
1)APPLE INC.
Address of Applicant :1 Infinite Loop, Cupertino, CA 95014 U.S.A.
(72)**Name of Inventor :**
1)MARCELLINO, Christopher

(57) Abstract :
Methods and apparatuses that generate a subtopic identifier identifying a client application within a client device are described. The client application may be associated with a server application hosted in one or more application servers. Notification services may be registered with the application servers from the client application to forward identifiers associated with the client application to the server application to enable the server application to push notification messages to the client device selectively for the client application. When receiving a notification message from the application server, the notification message may be examined to forward the notification message directly to the client application without invoking other applications in the client device if the notification message carries a subtopic identifier of the client application.

No. of Pages : 31 No. of Claims : 20

(12) PATENT APPLICATION PUBLICATION
(19) INDIA
(22) Date of filing of Application :03/01/2014

(21) Application No.18/KOLNP/2014 A
(43) Publication Date : 21/03/2014

(54) Title of the invention : APPARATUS AND METHOD FOR TRANSMITTING AND RECEIVING PACKET IN BROADCASTING AND COMMUNICATION SYSTEM

(51) International classification :H04L1/00,H03M13/03
(31) Priority Document No :10-2011-0056562
(32) Priority Date :11/06/2011
(33) Name of priority country :Republic of Korea
(86) International Application No :PCT/KR2012/004559
Filing Date :08/06/2012
(87) International Publication No :WO 2012/173359
(61) Patent of Addition to Application Number :NA
Filing Date :NA
(62) Divisional to Application Number :NA
Filing Date :NA

(71)**Name of Applicant :**
1)SAMSUNG ELECTRONICS CO., LTD.
Address of Applicant :129, Samsung-ro Yeongtong-gu, Suwon-si, Gyeonggi-do 443-742, Republic of Korea
(72)**Name of Inventor :**
1)HWANG, Sung-Hee
2)MYUNG, Se-Ho
3)HWANG, Sung-Oh
4)PARK, Kyung-Mo
5)YANG, Hyun-Koo

(57) Abstract :
A method and an apparatus for transmitting and receiving a packet in a broadcasting and communication system are provided. The method and apparatus allows a receiver to recognize data in a packet lost due to data loss occurring in a network. To this end, Forward Error Correction (FEC) control-related information is generated, a packet including the generated FEC control-related information is generated, and the packet is transmitted. The FEC control- related information includes at least one of FEC configuration-related information and FEC encoding configuration-related information.

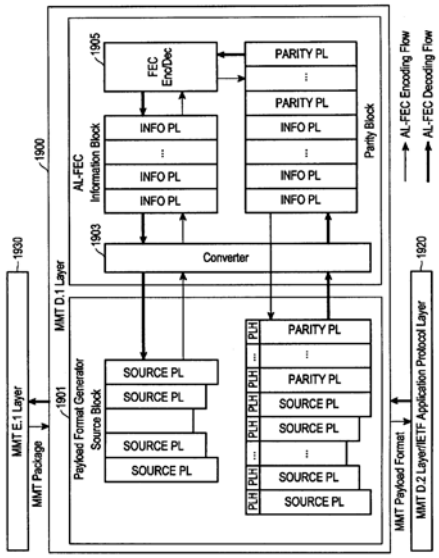

No. of Pages : 53 No. of Claims : 14

(12) PATENT APPLICATION PUBLICATION
(19) INDIA
(22) Date of filing of Application :11/09/2013

(21) Application No.1057/KOL/2013 A
(43) Publication Date : 21/03/2014

(54) Title of the invention : ELECTRONIC APPARATUS AND DISPLAY CONTROL METHOD

(51) International classification	:G06F 3/00	(71)**Name of Applicant :**
(31) Priority Document No	:2012-204444	**1)Ricoh Company, Ltd.**
(32) Priority Date	:18/09/2012	Address of Applicant :3-6, NAKAMAGOME 1-CHOME, OHTA-KU, TOKYO, 143-8555, Japan
(33) Name of priority country	:Japan	(72)**Name of Inventor :**
(86) International Application No	:NA	**1)GENKI UMEIZUMI**
Filing Date	:NA	
(87) International Publication No	: NA	
(61) Patent of Addition to Application Number	:NA	
Filing Date	:NA	
(62) Divisional to Application Number	:NA	
Filing Date	:NA	

(57) Abstract :
An electronic apparatus connectable to another electronic apparatus includes an information acquisition unit that acquires operation screen information to display a shared operation screen shared between the electronic apparatus and the other electronic apparatus from the other electronic apparatus, a shared screen display unit that displays the shared operation screen based on the operation screen information that the information acquisition unit acquired, a job execution unit that executes a job based on input to the shared operation screen, an event detector that detects a predetermined event that occurs during the job execution, a display determination unit that determines whether or not a specific screen including information specific to the electronic apparatus model is displayed in response to the detected predetermined event, and a specific screen display unit that changes the displayed shared operation screen into the specific screen if the display determination unit determines that the specific screen is displayed.

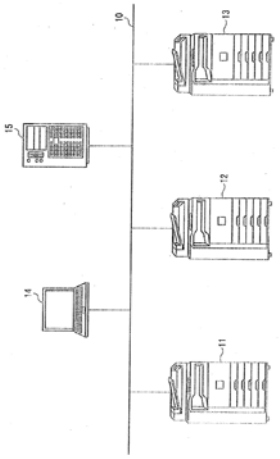

No. of Pages : 43 No. of Claims : 20

(12) PATENT APPLICATION PUBLICATION
(19) INDIA
(22) Date of filing of Application :17/01/2014

(21) Application No.122/KOLNP/2014 A
(43) Publication Date : 21/03/2014

(54) Title of the invention : PATIENT MONITORING SYSTEMS WITH GOAL INDICATORS

(51) International classification :A61B5/1455,A61B5/0245
(31) Priority Document No :13/174,446
(32) Priority Date :30/06/2011
(33) Name of priority country :U.S.A.
(86) International Application No :PCT/US2012/044862
Filing Date :29/06/2012
(87) International Publication No :WO 2013/003693
(61) Patent of Addition to Application Number :NA
Filing Date :NA
(62) Divisional to Application Number :NA
Filing Date :NA

(71)**Name of Applicant :**
1)COVIDIEN LP
Address of Applicant :15 HAMPSHIRE STREET MANSFIELD, MA 02048 U.S.A.
(72)**Name of Inventor :**
1)MUIR, Randy

(57) Abstract :
Embodiments of the present disclosure relate to patient monitors designed to display goal indicators showing progress toward achieving patient monitoring goals. The goal indicators may be displayed on a main monitoring screen of the patient monitors, allowing caretakers to easily evaluate how effective they have been in managing the patients condition. According to certain embodiments, the goal indicators may display a numerical value indicating the percentage of time that a physiological parameter, such as SpO2 or pulse rate, was within predetermined goal limits. The patient monitors further may include user interfaces that enable a clinician to adjust parameters of the goal indicators, such as the goal limits and/or the goal time frame.

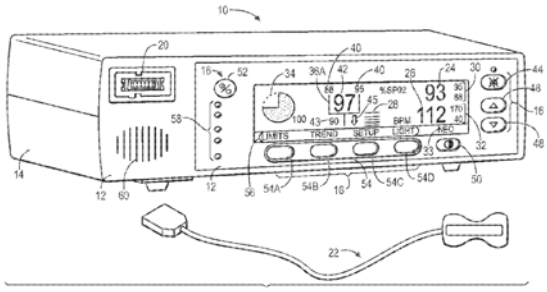

No. of Pages : 37 No. of Claims : 20

(12) PATENT APPLICATION PUBLICATION
(19) INDIA
(22) Date of filing of Application :16/01/2014

(21) Application No.105/KOLNP/2014 A
(43) Publication Date : 21/03/2014

(54) Title of the invention : POST-FORMING METHOD AND APPARATUS

(51) International classification :B21B1/08,B21B13/00,B21B31/00
(31) Priority Document No :2011902440
(32) Priority Date :22/06/2011
(33) Name of priority country :Australia
(86) International Application No :PCT/AU2012/000727
Filing Date :22/06/2012
(87) International Publication No :WO 2012/174606
(61) Patent of Addition to Application Number :NA
Filing Date :NA
(62) Divisional to Application Number :NA
Filing Date :NA

(71)**Name of Applicant :**
1)OLSSON, Ashley Dean
Address of Applicant :989 Crookwell Road, Goulburn, New South Wales 2580, AUSTRALIA
2)OLSSON, Ashley Norman
3)OLSSON, Nathanael Dean
4)OLSSON, Stafford James
(72)**Name of Inventor :**
1)OLSSON, Ashley Dean
2)OLSSON, Ashley Norman
3)OLSSON, Nathanael Dean
4)OLSSON, Stafford James

(57) Abstract :
One aspect of the invention concerns a metallic bar or post (15) comprising a longitudinal axis; a spine (16) extending along the longitudinal axis; and at least three interconnected arms (17-19), each of which extends along the spine (16) and generally radially from the spine (16), with a free end (20-22) of each said arm (17-19) being tapered in the direction of the free end (20-22) to the spine (16). Other aspects of the invention concern a roll stand and rolling mill for forming the bar or post (15).

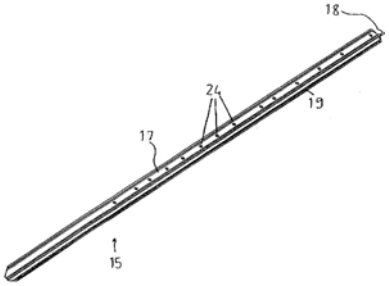

No. of Pages : 26 No. of Claims : 29

(12) PATENT APPLICATION PUBLICATION
(19) INDIA
(22) Date of filing of Application :17/01/2014

(21) Application No.116/KOLNP/2014 A
(43) Publication Date : 21/03/2014

(54) Title of the invention : RAILCAR DAMPING DEVICE

(51) International classification :B61F5/24,F15B21/04,F16F15/02
(31) Priority Document No :2011-136161
(32) Priority Date :20/06/2011
(33) Name of priority country :Japan
(86) International Application No :PCT/JP2012/065600
Filing Date :19/06/2012
(87) International Publication No :WO 2012/176758
(61) Patent of Addition to Application Number :NA
Filing Date :NA
(62) Divisional to Application Number :NA
Filing Date :NA

(71)**Name of Applicant :**
1)KAYABA INDUSTRY CO., LTD.
Address of Applicant :World Trade Center Bldg., 4-1, Hamamatsu-cho 2-chome, Minato-ku,Tokyo 105-6111,Japan
(72)**Name of Inventor :**
1)OGAWA Takayuki
2)AOKI Jun
3)UCHIDA Masaru

(57) Abstract :
This railcar damping device (1) includes: a tank (7) storing a liquid that is supplied to and discharged from a cylinder (2) of an actuator; a first open/close valve (9) provided in and being capable of opening/closing a first passage (8) that connects a rod-side chamber (5) and a piston-side chamber (6) which are partitioned by a piston (3) inserted inside the cylinder (2); a second open/close valve (11) provided in and being capable of opening/closing a second passage (10) that connects the piston-side chamber (6) and the tank (7); and a pump (12) that is driven to rotate at a predetermined normal rotation speed and that supplies the liquid from the tank (7) to the rod-side chamber (5). The rotation speed of the pump (12) drops in a case where the thrust command value drops below the normal lower-limit value, which is the lower-limit value of the thrust that can be generated by the actuator when the pump is rotating at the normal rotation speed.

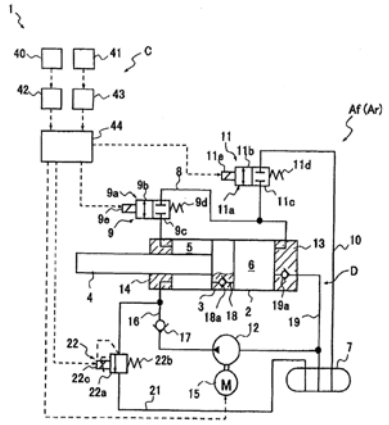

No. of Pages : 34 No. of Claims : 8

(12) PATENT APPLICATION PUBLICATION
(19) INDIA
(22) Date of filing of Application :24/01/2014

(21) Application No.171/KOLNP/2014 A
(43) Publication Date : 21/03/2014

(54) Title of the invention : METHOD FOR PRODUCING NEGATIVE CARBON FUEL

(51) International classification :C10L1/19,C10L1/10,C10L1/182
(31) Priority Document No :13/189,709
(32) Priority Date :25/07/2011
(33) Name of priority country :U.S.A.
(86) International Application No :PCT/US2012/044240
Filing Date :26/06/2012
(87) International Publication No:WO 2013/015930
(61) Patent of Addition to Application Number :NA
Filing Date :NA
(62) Divisional to Application Number :NA
Filing Date :NA

(71)**Name of Applicant :**
1)COOL PLANET BIOFUELS, INC.
Address of Applicant :460 Calle San Pablo, Camarillo, CA 93012 U.S.A.
(72)**Name of Inventor :**
1)CHEIKY, Michael
2)SILLS, Ronald, A.

(57) Abstract :
A method and process is described for producing negative carbon fuel. In its broadest form, a carbon-containing input is converted to combustible fuels, refinery feedstock, or chemicals and a carbonaceous solid concurrently in separate and substantially uncontaminated form. I n an embodiment of the invent ion, biomass is converted via discrete increasing temperatures under pressure to blendable combustible fuels and a carbonaceous sol id. The carbonaceous sol id may be reacted to synthesis gas, sold as charcoal product, carbon credits, used for carbon offsets, or sequestered.

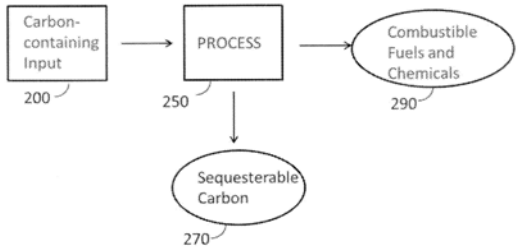

No. of Pages : 47 No. of Claims : 20

(12) PATENT APPLICATION PUBLICATION
(19) INDIA
(22) Date of filing of Application :24/01/2014

(21) Application No.169/KOLNP/2014 A
(43) Publication Date : 21/03/2014

(54) Title of the invention : DEVICE AND METHOD FOR THE REMOVAL OF SCALE FROM A METAL PRODUCT

(51) International classification :B21B45/02,B21B45/08
(31) Priority Document No :UD2011A000101
(32) Priority Date :30/06/2011
(33) Name of priority country :Italy
(86) International Application No :PCT/IB2012/001293
Filing Date :28/06/2012
(87) International Publication No :WO 2013/001350
(61) Patent of Addition to Application Number :NA
Filing Date :NA
(62) Divisional to Application Number :NA
Filing Date :NA

(71)**Name of Applicant :**
1)DANIELI & C. OFFICINE MECCANICHE SPA
Address of Applicant :Via Nazionale 41 I-33042 Buttrio Italy
(72)**Name of Inventor :**
1)POLONI, Alfredo
2)NOBILE, Matteo
3)RAGOGNA, Paolo

(57) Abstract :
Device for the removal of scale from the surface of a metal product (11) by delivering water under pressure, said device comprising a box-like structure (20) defining an internal volume (22) for the passage of the water under pressure, connected to an exit fissure (23) having a gap value of less than a millimeter, and extending continuously for at least the entire width of the metal product (11).

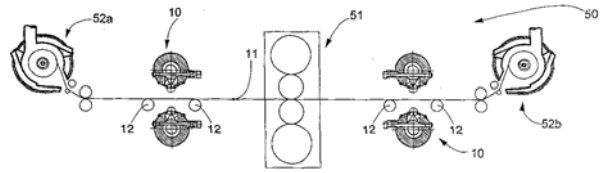

No. of Pages : 19 No. of Claims : 13

(12) PATENT APPLICATION PUBLICATION
(19) INDIA
(22) Date of filing of Application :17/01/2014

(21) Application No.113/KOLNP/2014 A
(43) Publication Date : 21/03/2014

(54) Title of the invention : SHIELDING DEVICE

(51) International classification :B60R13/08
(31) Priority Document No :10 2011 082 167.8
(32) Priority Date :06/09/2011
(33) Name of priority country :Germany
(86) International Application No :PCT/EP2012/058323
Filing Date :07/05/2012
(87) International Publication No :WO 2013/034320
(61) Patent of Addition to Application Number :NA
Filing Date :NA
(62) Divisional to Application Number :NA
Filing Date :NA

(71)**Name of Applicant :**
1)FEDERAL-MOGUL SEALING SYSTEMS GMBH
Address of Applicant :Hermann Goetze Strasse 8 57562 Herdorf Germany
(72)**Name of Inventor :**
1)KRUS, Ralf

(57) Abstract :
A shield is disclosed, comprising a perforated inner sheet-metal layer (3); an outer sheet-metal layer (4), wherein a cavity delimited by the perforated inner sheet-metal layer and the outer sheet-metal layer is defined; and a plurality of metallic hollow bodies (5) in the cavity, wherein the minimum diameter of the hollow bodies is larger than the perforation (2) of the inner sheet-metal layer.

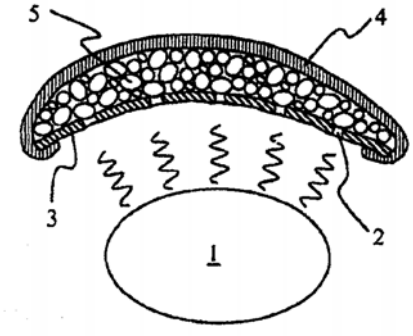

No. of Pages : 14 No. of Claims : 11

(12) PATENT APPLICATION PUBLICATION
(19) INDIA
(22) Date of filing of Application :20/01/2014
(21) Application No.143/KOLNP/2014 A
(43) Publication Date : 21/03/2014

(54) Title of the invention : CAPACITIVE ULTRASONIC TRANSDUCER

(51) International classification :G01H11/06,B06B1/02
(31) Priority Document No :A 929/2011
(32) Priority Date :24/06/2011
(33) Name of priority country :Austria
(86) International Application No :PCT/EP2012/061702
Filing Date :19/06/2012
(87) International Publication No :WO 2012/175492
(61) Patent of Addition to Application Number :NA
Filing Date :NA
(62) Divisional to Application Number :NA
Filing Date :NA

(71)**Name of Applicant :**
1)AVL LIST GMBH
Address of Applicant :Hans-List-Platz 1, A-8020 Graz AUSTRIA
(72)**Name of Inventor :**
1)KUDLATY, Katarzyna
2)WIESINGER, Michael
3)CERNUSCA, Michael

(57) Abstract :
The invention relates to a capacitive ultrasonic transducer, comprising a sensor head having a back plate, the structured front side of which is provided with an insulating layer and the back side of which is provided with an electrode. In order to achieve an improved design by means of which increased temperature resistance up to a few hundred degrees Celsius can be achieved even in strongly oxidative and reductive media, a tensile stress in the planar direction is applied to the membrane provided as a sound generator.

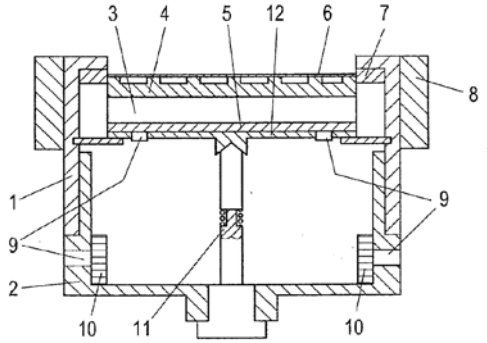

No. of Pages : 13 No. of Claims : 14

(12) PATENT APPLICATION PUBLICATION
(19) INDIA
(22) Date of filing of Application :23/01/2014
(21) Application No.163/KOLNP/2014 A
(43) Publication Date : 21/03/2014

(54) Title of the invention : MODULAR INDIRECT SUSPENDED/CEILING MOUNT FIXTURE

(51) International classification :F21S2/00,F21S8/06,F21V7/00
(31) Priority Document No :13/189,535
(32) Priority Date :24/07/2011
(33) Name of priority country :U.S.A.
(86) International Application No :PCT/US2012/047084
Filing Date :17/07/2012
(87) International Publication No :WO 2013/016079
(61) Patent of Addition to Application Number :NA
Filing Date :NA
(62) Divisional to Application Number :NA
Filing Date :NA

(71)**Name of Applicant :**
1)CREE,INC.
Address of Applicant :4600 Silicon Drive, Durham NC 27703, U.S.A.
(72)**Name of Inventor :**
1)SNELL, Nathan
2)LAY, James, Michael
3)NGUYEN, Nick
4)O'FLAHERTY, Patrick, John

(57) Abstract :
A modular troffer-style fixture particularly well- suited for use with solid state light sources. The fixture comprises a reflector (102) that includes parallel rails running along its length, providing a mount mechanism and structural support. An exposed heat sink (500) is disposed proximate to the reflector. The portion of the heat sink facing the reflector functions as a mount surface for the light sources. The heat sink is hollow through the center in the longitudinal direction. The hollow portion defines a conduit through which electrical conductors can be run to power light emitters. One or more light sources disposed along the heat sink mount surface emit light toward the reflector where it can be mixed and/or shaped before it is emitted from the troffer as useful light. End caps (110) are arranged at both ends of the reflector and heat sink, allowing for the easy connection of multiple units in a serial arrangement.

No. of Pages : 35 No. of Claims : 43

(12) PATENT APPLICATION PUBLICATION
(19) INDIA
(22) Date of filing of Application :17/01/2014

(21) Application No.114/KOLNP/2014 A
(43) Publication Date : 21/03/2014

(54) Title of the invention : RAILCAR DAMPING DEVICE

(51) International classification :B61F5/24,F15B21/04,F16F15/02
(31) Priority Document No :2011-136162
(32) Priority Date :20/06/2011
(33) Name of priority country :Japan
(86) International Application No :PCT/JP2012/065607
Filing Date :19/06/2012
(87) International Publication No :WO 2012/176762
(61) Patent of Addition to Application Number :NA
Filing Date :NA
(62) Divisional to Application Number :NA
Filing Date :NA

(71)**Name of Applicant :**
1)KAYABA INDUSTRY CO., LTD.
Address of Applicant :World Trade Center Bldg., 4-1, Hamamatsu-cho 2-chome, Minato-ku, Tokyo 105-6111 Japan
(72)**Name of Inventor :**
1)OGAWA Takayuki
2)AOKI Jun
3)UCHIDA Masaru
4)YABUKI Chie

(57) Abstract :
This railcar damping device (1) includes: a tank (7) storing a liquid that is supplied to and discharged from a cylinder (2) of an actuator; a first open/close valve (9) provided in and being capable of opening/closing a first passage (8) that connects a rod-side chamber (5) and a piston-side chamber (6) which are partitioned by a piston (3) inserted inside the cylinder (2); a second open/close valve (11) provided in and being capable of opening/closing a second passage (10) that connects the piston-side chamber (6) and the tank (7); a pump (12) that is driven to rotate at a predetermined normal rotation speed and that supplies the liquid from the tank (7) to the rod-side chamber (5); and a temperature determining unit (44c) that determines the temperature of the liquid supplied to the actuator. The rotation speed of the pump (12) drops below the normal rotation speed in a case where it is determined by the temperature determining unit (44c) that the temperature of the liquid is lower than a predetermined temperature that has been set in advance.

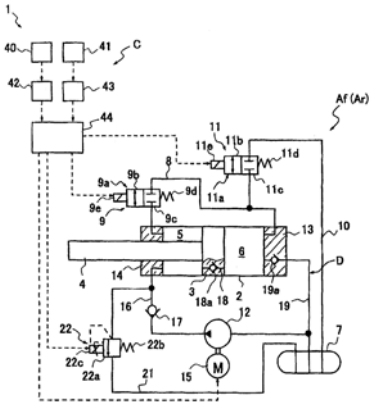

No. of Pages : 35 No. of Claims : 10

(12) PATENT APPLICATION PUBLICATION
(19) INDIA
(22) Date of filing of Application :23/01/2014
(21) Application No.158/KOLNP/2014 A
(43) Publication Date : 21/03/2014

(54) Title of the invention : PROCESS FOR PRODUCING FLUOROSULFURIC ACID AROMATIC-RING ESTERS

(51) International classification :C07C303/24,C07C305/26
(31) Priority Document No :2011-143647
(32) Priority Date :29/06/2011
(33) Name of priority country :Japan
(86) International Application No :PCT/JP2012/065311
Filing Date :15/06/2012
(87) International Publication No :WO 2013/002040
(61) Patent of Addition to Application Number :NA
Filing Date :NA
(62) Divisional to Application Number :NA
Filing Date :NA

(71)**Name of Applicant :**
1)CENTRAL GLASS COMPANY, LIMITED.
Address of Applicant :5253, Oaza Okiube, Ube-shi, Yamaguchi 755-0001, Japan
(72)**Name of Inventor :**
1)Akihiro ISHII
2)Takehisa ISHIMARU
3)Takako YAMAZAKI
4)Manabu YASUMOTO

(57) Abstract :
This process for producing fluorosulfuric acid aromatic-ring esters includes a step of reacting an aromatic-ring hydroxyl compound with sulfuryl fluoride (SO2F2) in the presence of a tertiary amine exclusive of pyridine and methylpyridine. Sulfuryl fluoride, which is used in the process, is widely used as a fumigant and is easily available on a large scale. The process makes it possible to produce objective substances under mild reaction conditions, speedily and in a high yield. The process can resolve the problems of conventional techniques all at once, thus being very useful as an industrial process for producing fluorosulfuric acid aromatic-ring esters.

No. of Pages : 25 No. of Claims : 4

(12) PATENT APPLICATION PUBLICATION
(19) INDIA
(22) Date of filing of Application :16/01/2014

(21) Application No.102/KOLNP/2014 A
(43) Publication Date : 21/03/2014

(54) Title of the invention : CASTABLE REFRACTORY MATERIAL

(51) International classification :C04B35/66,B22D11/10,B22D41/02
(31) Priority Document No :2011-169523
(32) Priority Date :02/08/2011
(33) Name of priority country :Japan
(86) International Application No :PCT/JP2012/066560
Filing Date :28/06/2012
(87) International Publication No :WO 2013/018476
(61) Patent of Addition to Application Number :NA
Filing Date :NA
(62) Divisional to Application Number :NA
Filing Date :NA

(71)**Name of Applicant :**
1)KROSAKIHARIMA CORPORATION
Address of Applicant :1-1, Higashihama-machi, Yahatanishi-ku, Kitakyushu-shi, Fukuoka, 806-8586 Japan
(72)**Name of Inventor :**
1)MIZUMA, Yoshihiro
2)FURUTA, Yoichi

(57) Abstract :
Provided is a monolithic refractory which rarely deteriorates in strength at a high temperature range of, for example, over 1,000°C irrespective of an organic binder being used as a bonding agent. The monolithic refractory of the present invention comprises an organic binder, and fireproof powder comprising a rough grain area with a grain diameter of at least 1mm and a fine grain area with a grain diameter of less than 1mm. The fine grain area is mixed with burning olivine, and the amount of the organic binder used ranges from 1 to 20% by mass in terms of outer percentage based on 100% by mass of the fireproof powder.

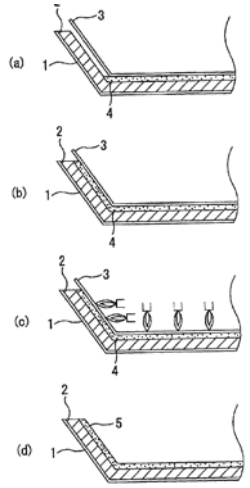

No. of Pages : 38 No. of Claims : 3

(12) PATENT APPLICATION PUBLICATION
(19) INDIA
(22) Date of filing of Application :23/01/2014

(21) Application No.162/KOLNP/2014 A
(43) Publication Date : 21/03/2014

(54) Title of the invention : METHOD AND DEVICE FOR DRYING A FLUID FILM APPLIED TO A SUBSTRATE

(51) International classification :F26B3/18,F26B13/10
(31) Priority Document No :10 2011 080 222.3
(32) Priority Date :01/08/2011
(33) Name of priority country :Germany
(86) International Application No :PCT/EP2012/064305
Filing Date :20/07/2012
(87) International Publication No :WO 2013/017441
(61) Patent of Addition to Application Number :NA
Filing Date :NA
(62) Divisional to Application Number :NA
Filing Date :NA

(71)**Name of Applicant :**
1)FMP TECHNOLOGY GMBH FLUID MEASUREMENTS & PROJECTS
Address of Applicant :Am Weichselgarten 34, 91058 Erlangen, GERMANY
(72)**Name of Inventor :**
1)DURST, Franz

(57) Abstract :
The invention relates to a method for drying a fluid film (F) applied to a substrate surface of a substrate (3) and containing a vaporizable liquid, with the following steps: transporting the substrate (3) on a transporting surface (6) of a transporting device (5) along a transporting direction (T) through a drying device (7), vaporizing the liquid by means of a heat source (13) having a heating surface (G), wherein the heating surface (G) is arranged at a distance (δG) of 0.1 mm to 5.0 mm opposite the substrate surface, and removing the vaporized liquid in the direction of the heat source (13).

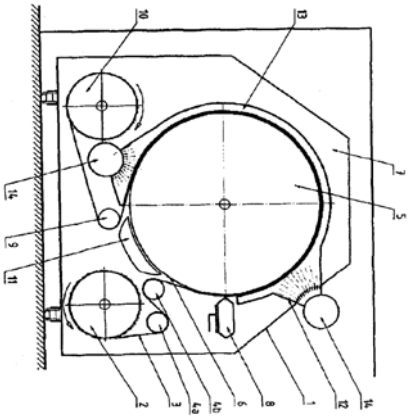

No. of Pages : 32 No. of Claims : 25

(12) PATENT APPLICATION PUBLICATION
(19) INDIA
(22) Date of filing of Application :18/06/2013
(21) Application No.728/KOL/2013 A
(43) Publication Date : 21/03/2014

(54) Title of the invention : HOLLOW VALVE PLATE.

(51) International classification :F04B 39/00
(31) Priority Document No :A50392/2012
(32) Priority Date :14/09/2012
(33) Name of priority country :Austria
(86) International Application No :NA
Filing Date :NA
(87) International Publication No : NA
(61) Patent of Addition to Application Number :NA
Filing Date :NA
(62) Divisional to Application Number :NA
Filing Date :NA

(71)**Name of Applicant :**
1)HOERBIGER KOMPRESSORTECHNIK HOLDING GMBH
Address of Applicant :DONAU-CITY-STRAßE 1 1220 WIEN AUSTRIA
(72)**Name of Inventor :**
1)ROLAND CESAK
2)OLAF BIELMEIER

(57) Abstract :
The hollow valve plate (1) of a piston compressor includes a single half-shell (3) with cooling channels (4, 5) that are open toward the side of the pressure valves (8), with said half-shell being covered by a reed plate 2 that is preferably welded or glued at least along the cooling channels (4, 5), and that is formed as a lift-stop (9) for the inserted closing plates (10) in the area or the pressure valves (8). This results in a-simplification of the production and assembly of such valve plates.

No. of Pages : 10 No. of Claims : 3

(12) PATENT APPLICATION PUBLICATION
(19) INDIA
(22) Date of filing of Application :26/08/2013
(21) Application No.981/KOL/2013 A
(43) Publication Date : 21/03/2014

(54) Title of the invention : LUBRICATING OIL COOLING STRUCTURE FOR ENGINES

(51) International classification :F01M 11/00
(31) Priority Document No :101134243
(32) Priority Date :19/09/2012
(33) Name of priority country :Taiwan
(86) International Application No :NA
Filing Date :NA
(87) International Publication No : NA
(61) Patent of Addition to Application Number :NA
Filing Date :NA
(62) Divisional to Application Number :NA
Filing Date :NA

(71)**Name of Applicant :**
1)SANYANG INDUSTRY CO. LTD.
Address of Applicant :184 KRNG TZU KOU, SHANG KENG VILLAGE, HSIN FONG SHIANG, HSINCHU, TAIWAN R.O.C.
(72)**Name of Inventor :**
1)CHOU PO-YU
2)CHEN HSIEN-LUNG
3)CHOU YU-CHIEH

(57) Abstract :
A lubricating oil cooling structure for engines of the present invention includes a crankcase, a cylinder block, a cylinder head, a cooling part, a lubricating oil passageway, and a cooling part lid. The cylinder block is connected with the crankcase,while the cylinder head is secured to the cylinder block including an oil passageway, and the cooling part is disposed on the cylinder block and provided with at least one cooling oil passageway. The lubricating oil passageway is disposed in the cylinder block and comprises a first channel and a second channel communicated with the cooling part. The cooling part lid covers on the cooling part which is provided with a plurality of fins to guide cooling air. Because the cooling part is mounted outside of the cylinder block, when lubricating oil flows into the cooling oil passageway of the cooling part,heat of the cylinder block would not affect the cooling part and the lubricating oil could be cooling down.

No. of Pages : 14 No. of Claims : 7

(12) PATENT APPLICATION PUBLICATION
(19) INDIA
(22) Date of filing of Application :20/01/2014
(21) Application No.133/KOLNP/2014 A
(43) Publication Date : 21/03/2014

(54) Title of the invention : HOUSEHOLD APPLIANCE HAVING AT LEAST ONE PANEL AND AT LEAST ONE CONNECTION APERTURE DISPOSED ON SAID PANEL

(51) International classification	:D06F 39/00,D06F39/12
(31) Priority Document No	:2011/08399
(32) Priority Date	:22/08/2011
(33) Name of priority country	:Turkey
(86) International Application No	:PCT/EP2012/066250
Filing Date	:21/08/2012
(87) International Publication No	:WO 2013/026846
(61) Patent of Addition to Application Number	:NA
Filing Date	:NA
(62) Divisional to Application Number	:NA
Filing Date	:NA

(71)**Name of Applicant :**
1)BSH BOSCH UND SIEMENS HAUSGER„TE GMBH
Address of Applicant :CARL-WERY-STR.34, 81739, MÜNCHEN, GERMANY
(72)**Name of Inventor :**
1)ÖZKAN, SÜLEYMAN

(57) Abstract :
This invention relates to a household appliance, particularly a laundry washing/drying machine (10), comprising a housing (11) having at least one panel, an oscillating group disposed in said housing (11), and at least one connection aperture (13) disposed on said panel, through which a fastening pin (20) is passed and fastened to said oscillating group during a transportation event. The washing machine (10) comprises at least one structural reinforcement (14) in the form of a protrusion or recess disposed in the vicinity of said connection aperture (13) on the panel.

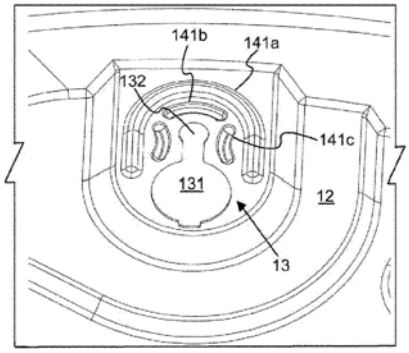

No. of Pages : 18 No. of Claims : 17

(12) PATENT APPLICATION PUBLICATION
(19) INDIA
(22) Date of filing of Application :16/01/2014
(21) Application No.101/KOLNP/2014 A
(43) Publication Date : 21/03/2014

(54) Title of the invention : SEAT FITTING FOR A MOTOR VEHICLE SEAT

(51) International classification :B60N2/225,B60N2/12
(31) Priority Document No :102011052059.7
(32) Priority Date :22/07/2011
(33) Name of priority country :Germany
(86) International Application No :PCT/EP2012/063156
Filing Date :05/07/2012
(87) International Publication No :WO 2013/013952
(61) Patent of Addition to Application Number :NA
Filing Date :NA
(62) Divisional to Application Number :NA
Filing Date :NA

(71)**Name of Applicant :**
1)C. ROB. HAMMERSTEIN GMBH & CO. KG
Address of Applicant :Merscheider Straße 167, 42699 Solingen, GERMANY
(72)**Name of Inventor :**
1)BALZAR, David
2)WINGENSIEFEN, Wilhelm
3)HOFFMANN, Andreas

(57) Abstract :
The invention relates to a seat fitting for a motor vehicle seat, with a fitting lower part (5) which is connectable to a seat lower part, a fitting upper part (2) which is connectable to a seat back, an eccentric epicyclic gearing (6) which connects the fitting upper part and fitting lower part in an articulated manner and is intended for adjusting the inclination of the fitting upper part in relation to the fitting lower part, and an actuating means for coupling the seat fitting to a seat longitudinal guide, wherein the fitting upper part has a pivoting body (4) which is connectable in a fixed position to the seat back, is connected unlockably to a basic body of the fitting upper part and, in the unlocking position, is able to be brought in relation to the fitting lower part into a forwardly folded position, in which a first stop surface (7, 8) on one of either the pivoting body or fitting lower part bears against a stop element (7, 8) on the other of the pivoting body or fitting lower part. In order to improve a seat fitting of the type mentioned at the beginning, provision is made for the actuating means to be formed by an unlocking lever (9) which is adjustable on the fitting lower part between a rest position and an actuating position and which is intended at one end for the arrangement of a coupling element and at the other end has a first stop body (12) which is in engagement in the region about the forwardly folded position of the pivoting body with a second stop body (13) on the pivoting body, wherein the first stop body or the second stop body is formed by a second stop surface which is designed in such a manner that, in the forwardly folded position, the pivoting body substantially completely shifts the unlocking lever into the unlocking position irrespective of the inclination to which the fitting upper part is set.

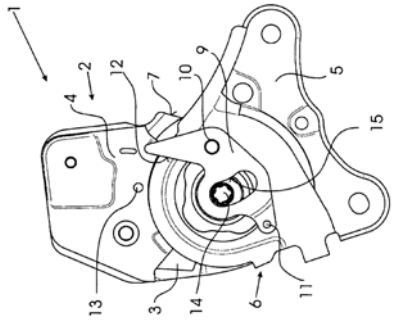

No. of Pages : 23 No. of Claims : 8

(12) PATENT APPLICATION PUBLICATION
(19) INDIA
(22) Date of filing of Application :16/09/2013
(21) Application No.1071/KOL/2013 A
(43) Publication Date : 21/03/2014

(54) Title of the invention : TONER FOR FORMING ELECTROSTATIC IMAGE, DEVELOPER, PROCESS CARTRIDGE, AND IMAGE FORMING APPARATUS

(51) International classification :G03G 9/00
(31) Priority Document No :2012-204162
(32) Priority Date :18/09/2012
(33) Name of priority country :Japan
(86) International Application No :NA
Filing Date :NA
(87) International Publication No : NA
(61) Patent of Addition to Application Number :NA
Filing Date :NA
(62) Divisional to Application Number :NA
Filing Date :NA

(71)**Name of Applicant :**
1)Ricoh Company, Ltd.
Address of Applicant :3-6, NAKAMAGOME 1-CHOME, OHTA-KU, TOKYO, Japan
(72)**Name of Inventor :**
1)DAISUKE ASAHINA
2)HIROSHI YAMASHITA
3)MASANA SHIBA
4)TSUYOSHI SUGIMOTO
5)YUKARI FUKUDA
6)RINTARO TAKAHASHI

(57) Abstract :
To provide a toner, which contains a colorant, a binder resin, and a releasing agent, wherein the toner satisfies the following (a) to (c): (a) the toner contains at least a polyester resin as the binder resin; (b) the toner has Tg1st of 25°C to 50°C; and (c) the toner has a TMA compressive deformation rate (TMA%) of 10% or lower at 50°C under a condition having relative humidity of 70%, wherein the Tg1st is glass transition temperature of the toner for first heating, as the toner is measured by a DSC system (a differential scanning calorimeter).

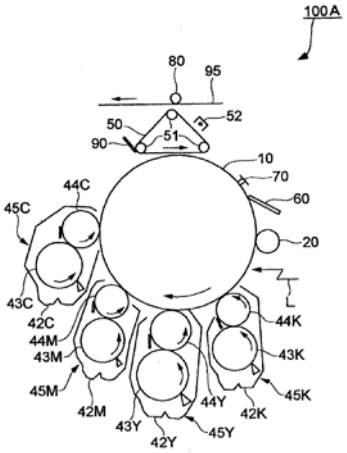

No. of Pages : 97 No. of Claims : 14

(12) PATENT APPLICATION PUBLICATION
(19) INDIA
(22) Date of filing of Application :18/09/2012
(21) Application No.1075/KOL/2012 A
(43) Publication Date : 21/03/2014

(54) Title of the invention : HERBAL FORMULATION FOR INDIGESTION/ACIDITY/CONSTIPATION

(51) International classification :A61K36/00
(31) Priority Document No :NA
(32) Priority Date :NA
(33) Name of priority country :NA
(86) International Application No :NA
Filing Date :NA
(87) International Publication No : NA
(61) Patent of Addition to Application Number :NA
Filing Date :NA
(62) Divisional to Application Number :NA
Filing Date :NA

(71)**Name of Applicant :**
1)NAMOSOLE PALLI MANGAL LCPAG KENDRA
Address of Applicant :VILL-BHALIAGHATI, P.O.-BACHHURKHOARD, DIST.-PASCHIM MEDINIPUR, P.S.-NAYAGRAM, PINCODE-721143, WEST BENGAL. INDIA
(72)**Name of Inventor :**
1)SIBANI MALLICK
2)KANAILAL MAITI

(57) Abstract :
The invention provides a novel herbal formulation used for treating indigestion. The Formulation(s) comprises of extract of Aristolochia indica, Stephenia hernandifolia, Hemidesmus indicus, Lygodium flexuosum, Bark of Holarrhena antidysenterica, Holarrhena antidysenterica, Soymida febrifuge, Andrographis paniculata, Rauwolfia serpentina, Clerodendrum serratum, Ochna pumila, Whole plant of Swertia chirata, Zingiber officinale, Piper longum, Carum copticum, Emblica officinalis, Terminalia chebula, Termanalia belerica, Nigella sativa, Rangia pictinata, Piper Nigrum, Centella asiatica, Aegle marmelos., and a combination thereof. The formulation can be used as an emulsion or as a soft gelatin capsule for oral dosage forms.

No. of Pages : 25 No. of Claims : 10

(12) PATENT APPLICATION PUBLICATION
(19) INDIA
(22) Date of filing of Application :22/03/2013
(21) Application No.326/KOL/2013 A
(43) Publication Date : 21/03/2014

(54) Title of the invention : METHOD AND DEVICE FOR SMART SELECTION OF TV CHANNELS

(51) International classification :H04N21/443
(31) Priority Document No :201210343861.0
(32) Priority Date :14/09/2012
(33) Name of priority country :China
(86) International Application No :NA
Filing Date :NA
(87) International Publication No : NA
(61) Patent of Addition to Application Number :NA
Filing Date :NA
(62) Divisional to Application Number :NA
Filing Date :NA

(71)**Name of Applicant :**
1)QUATIUS LIMITED
Address of Applicant :UNITS 05-07, 16/F, GREENFIELD TOWER, CONCORDIA PLAZA, 1 SCIENCE MUSEUM ROAD, TST EAST, KLN., HONG KONG, P.R. CHINA
(72)**Name of Inventor :**
1)CHEUNG, KA WING

(57) Abstract :
A method for smart selection of TV channels is disclosed. The method includes the following steps: receiving a first user command, obtaining the current time, and determining a preset time period based on the current time, and prompting a first list of recommended channels corresponding to the preset time period; the first list of recommended channels is determined by the following steps: obtaining the accumulated broadcasting duration of each channel by accumulating the historical broadcasting duration of each channel during the preset time period; ranking the channels according to their accumulated broadcasting duration, the channel with longer broadcasting duration being ranked in front of the channel with shorter broadcasting duration, based on which the first list of recommended channels is determined. A corresponding device is further provided. The device includes an acquisition module and a prompting module.

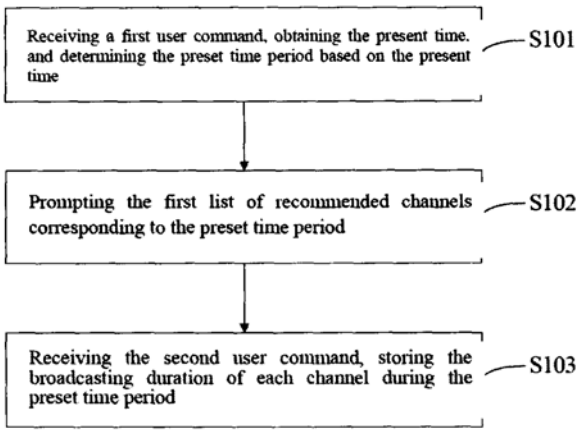

No. of Pages : 58 No. of Claims : 22

(12) PATENT APPLICATION PUBLICATION
(19) INDIA
(22) Date of filing of Application :30/08/2013
(21) Application No.1007/KOL/2013 A
(43) Publication Date : 21/03/2014

(54) Title of the invention : PUMP UNIT FOR WATER JET SURGERY

(51) International classification :F04B 53/00
(31) Priority Document No :12185019.2
(32) Priority Date :19/09/2012
(33) Name of priority country :EPO
(86) International Application No :NA
Filing Date :NA
(87) International Publication No : NA
(61) Patent of Addition to Application Number :NA
Filing Date :NA
(62) Divisional to Application Number :NA
Filing Date :NA

(71)**Name of Applicant :**
1)ERBE ELEKTROMEDIZIN GMBH
Address of Applicant :WALDHOERNLESTRASSE 17, 72072 TÜBINGEN, GERMANY
(72)**Name of Inventor :**
1)ELMAR H„BE

(57) Abstract :
The pump unit (10) according to the invention encompasses at least two piston pumps, which include pump cylinders (12, 13) and pump pistons (15, 16). Each piston pump comprises at least one inlet valve (25, 27) and an outlet valve (34, 35). At least the inlet valves (25, 27), but optionally also the outlet valves (34, 36), are embodied as springless ball check valves, in the case of which the valve ball (34) is located in an interior (39), which is defined by a surface of the housing (preferably of the first housing part 11) at least on one side (52). With this design, the actual check valve is only joined and is thus produced completely only when the housing parts (11, 17) are brought together. Check valves, which can be sterilized well and which can be cleaned without any residue, can thus be integrated into the pump unit (10) in a simple and reliable manner.

No. of Pages : 25 No. of Claims : 10

(12) PATENT APPLICATION PUBLICATION
(19) INDIA
(22) Date of filing of Application :17/01/2014
(21) Application No.118/KOLNP/2014 A
(43) Publication Date : 21/03/2014

(54) Title of the invention : A DEVICE FOR FORMING CONCRETE SPECIMENS

(51) International classification :G01N1/28
(31) Priority Document No :PR2011A000058
(32) Priority Date :22/06/2011
(33) Name of priority country :Italy
(86) International Application No :PCT/IB2012/052944
Filing Date :11/06/2012
(87) International Publication No :WO 2012/176092
(61) Patent of Addition to Application Number :NA
Filing Date :NA
(62) Divisional to Application Number :NA
Filing Date :NA

(71)**Name of Applicant :**
1)BETONROSSI S.p.A.
Address of Applicant :Via Caorsana 11, I-29122 Piacenza Italy
(72)**Name of Inventor :**
1)MANNI, Enrico
2)FILA ROBATTINO,Paolo
3)BOROTTI, Luca

(57) Abstract :
A device for forming concrete specimens comprising: concrete feeding means (2) comprising a discharge mouth (20); - support means (3) suitable for supporting at least a first and/or a second form, said discharge mouth (20) and the force of gravity directing the concrete flowing out of the feeding means (2) to said support means (3); - first vibrator means (5) suitable for generating the vibration of at least the contents of first and/or second form.

No. of Pages : 28 No. of Claims : 11

(12) PATENT APPLICATION PUBLICATION
(19) INDIA
(22) Date of filing of Application :21/01/2014

(21) Application No.149/KOLNP/2014 A
(43) Publication Date : 21/03/2014

(54) Title of the invention : SURFACE STRUCTURE OF ARTICLE

(51) International classification :B29C33/42,B29C45/37
(31) Priority Document No :2011-140426
(32) Priority Date :24/06/2011
(33) Name of priority country :Japan
(86) International Application No :PCT/JP2012/055133
Filing Date :29/02/2012
(87) International Publication No :WO 2012/176502
(61) Patent of Addition to Application Number :NA
Filing Date :NA
(62) Divisional to Application Number :NA
Filing Date :NA

(71)**Name of Applicant :**
1)NISSAN MOTOR CO., LTD.
Address of Applicant :2, Takara-cho, Kanagawa-ku Yokohama-shi, Kanagawa 221-0023, Japan
(72)**Name of Inventor :**
1)Hiroyuki TANAKA
2)Sumio SAKATA
3)Akane MOTOFUJI
4)Kazuya OKAZAKI
5)Fumi TOYOFUKU
6)Makoto TAMURAYA

(57) Abstract :
In the invention, an unevenness is formed on the surface of an article, and a fine unevenness that is finer than the unevenness is formed on a distal end of a convexity of the unevenness. The unevenness is of such a shape that when a persons finger touches the surface of the article, the per-unit-area proportion of the surface area where the finger and article come into contact is in a range 35% to 90%. Preferably, the unevenness is of such a shape that the proportion of the surface area where the finger and article come into contact is in a range 45% to 80%.

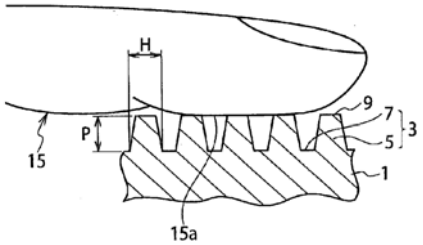

No. of Pages : 15 No. of Claims : 6

(12) PATENT APPLICATION PUBLICATION
(19) INDIA
(22) Date of filing of Application :13/05/2013
(21) Application No.541/KOL/2013 A
(43) Publication Date : 21/03/2014

(54) Title of the invention : FAN ASSEMBLING STRUCTURE AND FAN DEVICE HAVING THE SAME

(51) International classification :F04D 29/00
(31) Priority Document No :201210342865.7
(32) Priority Date :14/09/2012
(33) Name of priority country :China
(86) International Application No :NA
Filing Date :NA
(87) International Publication No : NA
(61) Patent of Addition to Application Number :NA
Filing Date :NA
(62) Divisional to Application Number :NA
Filing Date :NA

(71)**Name of Applicant :**
1)DELTA ELECTRONICS POWER (DONG GUAN) CO., LTD.
Address of Applicant :XIN CHENG DISTRICT, SHI JIE TOWN, DONGGUAN CITY, GUANGDONG, P.R. CHINA
(72)**Name of Inventor :**
1)BA, ZHICHAO
2)LI, WEIGUO

(57) Abstract :
The disclosure provides a fan assembling structure and a fan device having the same. The fan comprises a frame having an upper board, a lower board and a circular connector, and blades disposed in the frame. The lower board comprises four side edges in sequential connection. A first fixing hole is at the first side edge, and a second fixing hole is at the upper board. The structure comprises an assembling board having a bottom plate and two parallel side plates. The bottom plate comprises a ventilating area. A through hole is defined at a first side of the ventilating area, and a hook is disposed on a second side of the ventilating area. And at least one protrusion extends inwardly from an inner side of at least one of the two parallel side plates, a guiding slot being formed between the protrusion and the bottom plate.

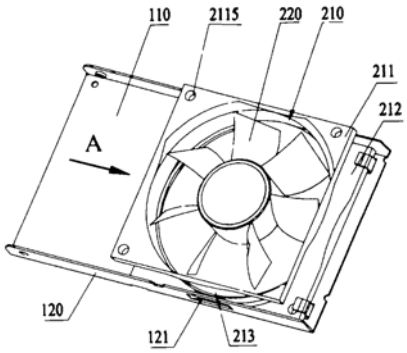

No. of Pages : 15 No. of Claims : 10

(12) PATENT APPLICATION PUBLICATION
(19) INDIA
(22) Date of filing of Application :16/01/2014
(21) Application No.103/KOLNP/2014 A
(43) Publication Date : 21/03/2014

(54) Title of the invention : FLUID CONTROL VALVE ASSEMBLY

(51) International classification :B60K15/035,B60K15/03,F02M25/08
(31) Priority Document No :13/184,762
(32) Priority Date :18/07/2011
(33) Name of priority country :U.S.A.
(86) International Application No :PCT/IB2012/001398
Filing Date :18/07/2012
(87) International Publication No :WO 2013/011366
(61) Patent of Addition to Application Number :NA
Filing Date :NA
(62) Divisional to Application Number :NA
Filing Date :NA

(71)**Name of Applicant :**
1)EATON CORPORATION
Address of Applicant :1000 Eaton Boulevard, Cleveland, Ohio 44122, U.S.A.
(72)**Name of Inventor :**
1)KULKARNI, Girish
2)SARKAR, Subrata
3)KUSA, Swethaghnya
4)PACHPUND, Santosh
5)KIPPE, Bradley, N.

(57) Abstract :
A valve assembly (34) includes a housing defining first (44), second (46), third (48), and fourth (50) passages. The first passage (44) channels relatively-high pressure fluid and the second passage (46) channels relatively-low pressure fluid into the valve. The third passage (48) connects to the second passage (46) and releases fluid from the valve. The fourth passage (50) connects to the first passage (44) and the second passage (46) and releases fluid from the valve. The valve assembly also includes a first check-valve (52) that permits fluid flow from the second passage (46) to the third passage (48) and a second check-valve (54) that permits fluid flow from the second passage (46) to the fourth passage (50). The valve assembly additionally includes a nozzle (60) that controls velocity of the relatively-high pressure fluid entering the fourth passage (50) from the first passage (44). The relatively-low pressure fluid is pulled from the second passage (46) into the fourth passage (50) on the outer periphery (62) of the nozzle (60) by the relatively-high pressure fluid.

No. of Pages : 19 No. of Claims : 20

(12) PATENT APPLICATION PUBLICATION
(19) INDIA
(22) Date of filing of Application :21/01/2014

(21) Application No.153/KOLNP/2014 A
(43) Publication Date : 21/03/2014

(54) Title of the invention : SHOP ASSEMBLED VERTICAL SERPENTINE FLOW MOLTEN SALT SOLAR RECEIVER

(51) International classification :F24J2/10,F24J2/34,A61N1/04
(31) Priority Document No :61/513,251
(32) Priority Date :29/07/2011
(33) Name of priority country :U.S.A.
(86) International Application No :PCT/US2012/048676
Filing Date :27/07/2012
(87) International Publication No :WO 2013/019670
(61) Patent of Addition to Application Number :NA
Filing Date :NA
(62) Divisional to Application Number :NA
Filing Date :NA

(71)**Name of Applicant :**
1)BABCOCK & WILCOX POWER GENERATION GROUP, INC.
Address of Applicant :20 S. Van Buren Avenue, Barberton, OH 44203 U.S.A.

(72)**Name of Inventor :**
1)WASYLUK, David, T.
2)KRAFT, David, L.
3)MARSHALL, Jason, M.
4)IANNACCHIONE, STEVEN, P. (DECEASED)

(57) Abstract :
A solar receiver is disclosed. The solar receiver is modular, has multiple tube panels in a rectangular/square/polygonal/circular configuration, and is designed for use with molten salt or another heat transfer fluid. The heat transfer fluid flows in a vertical serpentine path through the sides (facets) of the solar receiver. The solar receiver can be shop assembled and can be used with a support tower to form a solar power system.

No. of Pages : 56 No. of Claims : 29

(12) PATENT APPLICATION PUBLICATION
(19) INDIA
(22) Date of filing of Application :20/01/2014

(21) Application No.134/KOLNP/2014 A
(43) Publication Date : 21/03/2014

(54) Title of the invention : CUTTING INSERT AND CHIP-CONTROL ARRANGEMENT THEREFOR

(51) International classification :B23B27/14
(31) Priority Document No :61/534,068
(32) Priority Date :13/09/2011
(33) Name of priority country :U.S.A.
(86) International Application No :PCT/IL2012/050337
Filing Date :30/08/2012
(87) International Publication No :WO 2013/038405
(61) Patent of Addition to Application Number :NA
Filing Date :NA
(62) Divisional to Application Number :NA
Filing Date :NA

(71)**Name of Applicant :**
1)ISCAR LTD.
Address of Applicant :P.O. Box 11, 24959 Tefen, ISRAEL
(72)**Name of Inventor :**
1)KRISHTUL, Roman

(57) Abstract :
A cutting insert (20) has at least first and second side surfaces (26A,26B), with a chip-control arrangement (60). The chip-control arrangement includes at least one projection (20, 128) disposed at an intersection (56) of a corner (44A) of the cutting insert. When the chip -control arrangement includes two projections (28,128,30,130) they can be disposed symmetrically on both sides of the intersection. Each of the at least one projections is elongated and extends longitudinally along an associated side surface.

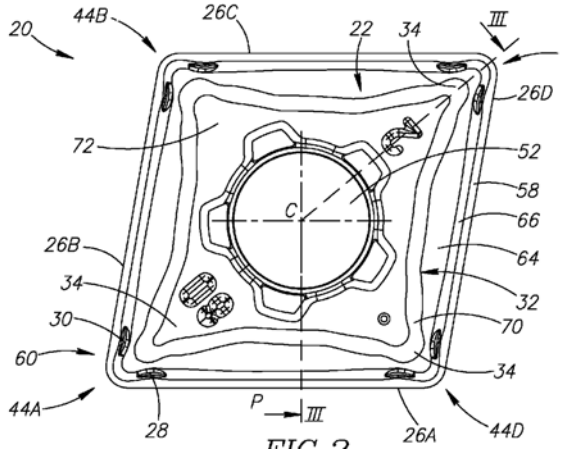

No. of Pages : 21 No. of Claims : 33

AMENDMENT UNDER SEC.57 (KOLKATA)

In pursuance of leave granted under Section 57 of the Patents Act, 1970 the name of the Patentee in respect of Patent No.223907 has been amended to :

M/S. Columbus Mckinnon Industrial Products GMBH

Publication Under Section 43(2) in Respect of the Grant

Following Patents have been granted and any person interested in opposing these patents under Section 25(2) may at any time within one year from the date of this issue, give notice to the Controller of Patents at the appropriate office, on the prescribed form-7 along with written statement and evidence, if any.

Serial Number	Patent Number	Application Number	Date of Application	Date of Priority	Title of Invention	Name of Patentee	Date of Publication of Abstract u/s 11(A)	Appropriate Office
1	259455	213/DELNP/2005	18/07/2003	19/07/2002	AN IN-SITU METHOD FOR SAMPLING AND MEASURING PARTICLES IN A PARTICLE CONTAINING STREAM	COLUMBIAN CHEMICALS COMPANY	14/11/2008	DELHI
2	259456	997/DELNP/2004	14/11/2002	26/11/2001	WEARABLE DISPOSABLE ARTICLE HAVING A WETNESS SENSATION MEMBER	THE PROCTER & GAMBLE COMPANY	15/05/2009	DELHI
3	259457	216/DELNP/2004	31/05/2002	31/07/2001	A SYSTEM FOR SUPPLYING AUDIOVISUAL PROGRAMMES IN A BROADCAST NETWORK ON DEMAND	THOMSON LICENSING S.A.	16/01/2009	DELHI
4	259458	2414/DELNP/2005	05/11/2003	05/11/2002	A SYSTEM FOR DISPLAYING A LICENSE OWNERSHIP POSITION	ACCORDO GROUP INTERNATIONAL LIMITED	26/01/2007	DELHI
5	259459	4437/DELNP/2007	15/12/2005	16/12/2004	A CAP HAVING A BUTTON FOR THE ACTUATION OF A VALVE OF A CONTAINER	THE PROCTER & GAMBLE COMPANY,WELLA AKTIENGESELLSCHAFT	24/08/2007	DELHI
6	259461	554/DEL/1998	03/03/1998	04/03/1997	VALUE AND SECURITY PRODUCT WITH LUMINESCENT SAFETY ELEMENT AND PROCESS FOR THE MANUFACTURE THEREOF AND ARRANGEMENT FOR CHECKING THE AUTHENTICITY VISUALLY AND BY MACHINE	BUNDESDRUCKEREI GMBH	30/10/2009	DELHI
7	259466	199/DELNP/2004	13/08/2001	13/08/2001	A COMPUTING SYSTEM FOR IDENTIFICATION AND DEFENSE OF ATTACKS ON SERVER SYSTEM BEING CONNECTED TO NETWORK	IP-ONLINE GmbH	06/03/2009	DELHI
8	259468	2063/DEL/2005	03/08/2005	13/08/2004	METHOD AND SYSTEMS FOR SENSING LAMP IGNITOR CIRCUITRY FAILURE IN A PROJECTION DEVICE	DELL PRODUCTS L.P.	31/07/2009	DELHI

9	259473	343/DELNP/2008	19/05/2006	13/07/2005	METHOD OF ADDRESS CONFIGURATION IN AN ACCESS DEVICE AND A ROUTING DEVICE AND DEVICE THEREOF	ALCATEL	25/07/2008	DELHI
10	259475	3655/DELNP/2004	05/06/2003	05/06/2002	CONDITIONAL ACCESS CONTENT RECEPTION SYSTEM AND A SECONDARY TERMINAL FOR ACCESSING THE CONDITIONAL ACCESS CONTENT	THOMSON LICENSING S.A.	20/11/2009	DELHI
11	259479	55/DEL/2007	08/01/2007 16:01:26	16/01/2006	AN AIRBAG COVER AND METHOD OF MANUFACTURING THEREOF	TOYODA GOSEI CO. LTD.	03/08/2007	DELHI
12	259481	552/DELNP/2005	22/09/2003	26/09/2002	A SYSTEM AND METHOD FOR GUARANTEEING MESSAGE INTEGRITY	INTERNATIONAL BUSINESS MACHINE CORPORATION	26/03/2010	DELHI
13	259484	1962/DELNP/2005	27/08/2003	08/10/2002	A METHOD OF DESALINATING SEAWATER AND AN APPARATUS THEREOF	WATER STANDARD COMPANY, LLC	27/03/2009	DELHI
14	259486	5149/DELNP/2007	22/12/2005	22/12/2004	MC-CDMA MULTIPLEXING IN AN ORTHOGONAL UPLINK	QUALCOMM INCORPORATED	17/08/2007	DELHI
15	259487	502/DEL/2005	09/03/2005	21/04/2004	A METHOD FOR HETEROGENEOUS SYSTEM CONFIGURATION	DELL PRODUCTS L.P.,	29/12/2006	DELHI
16	259488	1909/DELNP/2008	15/09/2006	16/09/2005	METHOD AND DEVICE FOR APPLYING HARD SOLDER	EMITEC GESELLSCHAFT FUR EMISSIONSTECHNOLOGIE MBH.,	27/06/2008	DELHI
17	259491	1866/DELNP/2006	02/11/2004	05/11/2003	A SYSTEM AND METHOD FOR ENABLING VIDEO CONTENT TO BE SELECTED BY A USER VIA THE INTERNET AND FOR DISTRIBUTING SELECTED VIDEO CONTENT VIA A MULTICHANNEL VIDEO BROADCASTING SYSTEM	MOOSA EISA AL AMRI	24/08/2007	DELHI
18	259492	1458/DEL/2004	22/05/2003	18/12/2000	PROCESS FOR THE PREPARATION OF SULPHONAMIDE-SUBSTITUTED IMIDAZOTRIAZINONES	BAYER INTELLECTUAL PROPERTY GMBH	21/07/2006	DELHI
19	259495	2203/DELNP/2008	24/08/2006	16/09/2005	METHOD FOR RESERVING BANDWIDTH	SIEMENS ENTERPRISE COMMUNICATIONS GMBH & CO.KG	04/07/2008	DELHI
20	259498	1529/DEL/2007	19/07/2007 15:01:56	20/07/2006	A PERMANENT TYPE ELECTRIC ROTARY MACHINE	HITACHI INDUSTRIAL EQUIPMENT SYSTEM CO.,LTD.	25/01/2008	DELHI

21	259500	7462/DELNP/2007	09/05/2006	15/06/2005	FUEL INJECTION CONTROL METHOD	YANMAR CO.,LTD	11/07/2008	DELHI
22	259503	2157/DELNP/2003	04/12/2001	05/06/2001	A METHOD FOR DELIVERING DATA STREAMS AND A BROADCAST BASED DATA DISSEMINATION ENVIRONMENT	D-Link Corporation	20/01/2006	DELHI
23	259504	4362/DELNP/2006	09/02/2005	09/02/2004	AN ALBUMIN FUSION PROTEIN COMPRISING TWO OR MORE TANDEMLY ORIENTED GLUCAGON-LIKE-PEPTIDE 1 (GLP-1) POLYPEPTIDES	HUMAN GENOME SCIENCES INC.	10/08/2007	DELHI
24	259505	897/DEL/2005	07/04/2005	21/05/2004	CONTROL UNIT FOR PROCESSING IMAGE DATA FROM A PLURALITY OF ENDPOINTS	POLYSCOM, INC	12/01/2007	DELHI
25	259508	4468/DELNP/2007	09/12/2005	22/12/2004	POLYCARBONATE WITH p-TERT-BUTYLPHENOL	BAYER MATERIALSCIENCE AG	24/08/2007	DELHI
26	259509	3771/DELNP/2004	10/06/2002	10/06/2002	TWO-STAGE QUENCH TOWER FOR USE WITHOXYGENATE CONVERSION PROCESS	UOP LLC	17/04/2009	DELHI
27	259510	123/DEL/2008	15/01/2008 12:16:13	02/02/2007	VALVE SEAL	MILLIPORE AB	29/08/2008	DELHI
28	259513	4030/DELNP/2006	11/01/2005	13/01/2004	AN APPARATUS IN A WIRELESS MULTIPLE-INPUT MULTIPLE-OUTPUT (MIMO) COMMUNICATION SYSTEM	QUALCOMM INCORPORATED	17/08/2007	DELHI
29	259514	5652/DELNP/2006	31/03/2005	06/04/2004	METHOD OF PREPARING 1-ACETYL-1-CHLOROCYCLOPROPANE	BAYER CROPSCIENCE LP,BAYER CROPSCIENCE AKTIENGESELLSCHAFT	13/07/2007	DELHI
30	259516	783/DEL/2005	31/03/2005		A COMB FOR TEMPERATURE AND VOLUME CONTROLLED OILING AND MASSAGING OF SCALP	COUNCIL OF SCIENTIFIC & INDUSTRIAL RESEARCH	19/06/2009	DELHI
31	259518	2446/DELNP/2005	29/07/2004	24/10/2003	SYSTEMS AND METHODS FOR MODIFYING COMPLEX STRUCTURED TYPE COLUMNS IN A DATABASE	MICROSOFT CORPORATION	02/10/2009	DELHI
32	259520	4349/DELNP/2007	28/09/2005	12/11/2004	STEEL WITH EXCELLENT WEATHER RESISTANCE AT THE SEASIDE ATMOSPHERE, AND MANUFACTURING METHOD THEREFOR	POSCO	24/08/2007	DELHI
33	259521	1675/DELNP/2007	15/08/2005	17/08/2004	A METHOD FOR PREPARING A FLUSH PIGMENT OR INK PRODUCT	FLINT GROUP INCORPORATED	24/08/2007	DELHI

34	259525	2456/DEL/1996	07/11/1996	09/11/1995	VIDEO DISPLAY APPARATUS	SONY CORPORATION	06/02/2009	DELHI
35	259526	249/DEL/2000	16/03/2000		A GAS FLOW MEASUREMENT DEVICE FOR USE IN AMBIENT GAS SAMPLING	COUNCIL OF SCIENTIFIC & INDUSTRIAL RESEARCH	03/03/2006	DELHI
36	259527	2625/DELNP/2007	02/08/2005	13/10/2004	MOBILE TELECOMMUNICATIONS TERMINAL WITH RFID FUNCTIONALITIES AND AN ASSOCIATED METHOD	SIEMENS AKTIENGESELLSCHAFT	04/05/2007	DELHI
37	259528	714/DEL/1998	20/03/1998	10/07/1997	AN OPTCAL RECORDING MEDIUM FOR AN OPTICAL SYSTEM	SONY CORPORATION	25/07/2008	DELHI
38	259529	442/DELNP/2005	26/08/2003	05/09/2002	DEVICE FOR THE DELIVERY OF A PREDOSED QUANTITY OF A DRUG	BOEHRINGER INGELHEIM PHARMA GMBH & CO. KG	05/12/2008	DELHI
39	259530	2783/DEL/1996	12/12/1996		A SYSTEM FOR LOCATING DATA SETS	DIGITAL EQUIPMENT CORPORATION	12/09/2008	DELHI
40	259531	1092/DEL/2003	02/09/2003	13/09/2002	ELECTROMAGNETIC PUMP	MIKUNI CORPORATION	27/05/2005	DELHI
41	259532	530/DEL/2001	26/04/2001		AN IMPROVED PROCESS FOR THE SYNTHESIS OF LITHIUM COBALT BORATE USEFUL AS CATHODE MATERIAL FOR REVERSIBLE LITHIUM ION CELLS	COUNCIL OF SCIENTIFIC & INDUSTRIAL RESEARCH	29/05/2009	DELHI
42	259533	2541/DEL/2004	23/12/2004		SOLAR DISC REFLECTOR ELECTRICITY PRODUCTION PLANT	HAZARILAL OJHA	26/06/2009	DELHI
43	259534	IN/PCT/2001/00109/DEL	29/06/2000	30/06/1999	ELECTRIC METER	GENERAL ELECTRIC COMPANY	16/01/2009	DELHI
44	259535	2960/DELNP/2004	02/04/2003	04/04/2002	AN INDUCTION HEATING SYSTEM FOR HEATING METAL PRODUCTS	CELES	03/04/2009	DELHI
45	259536	1824/DELNP/2004	25/11/2002	28/11/2001	POWER CONTROL SYSTEM FOR AN RF TRANSMITTER AND TRANSMITTER HAVING SUCH SYSTEM	MSTAR SEMICONDUCTOR, INC.,,MSTAR SOFTWARE R&D (SHENZHEN) LTD.,,MSTAR FRANCE SAS.,,MSTAR SEMICONDUCTOR, INC.,	06/04/2007	DELHI
46	259537	140/DEL/1998	19/01/1998	29/01/1997	AN INFRARED RADIATING PANEL	SANDVIK INTELLECTUAL PROPERTY AB	06/03/2009	DELHI
47	259538	330/DEL/1996	20/02/1996	04/04/1996	A PORTABLE MICROORGANISMS ASSAY DEVICE	BATEC BIO ANALYTICAL TECHNOLOGY LTD.	12/09/2008	DELHI
48	259549	5777/DELNP/2005	16/09/2004	18/09/2003	PATTERNED REFLECTIVE OPTICAL STRUCTURES	JDS UNIPHASE CORPORATION	18/09/2009	DELHI

49	259554	1/DELNP/2008	04/07/2006	29/07/2005	METHOD FOR LOCALIZATION OF MOBILE TERMINALS	SIEMENS ENTERPRISE COMMUNICATIONS GMBH & CO. KG.	13/06/2008	DELHI
50	259555	2093/DEL/1996	24/09/1996	26/10/1995	A SYSTEM AND METHOD FOR EFFICIENT NOISE INJECTION FOR LOW BITRATE AUDIO COMPRESSION	MOTOROLA, INC.	01/08/2008	DELHI
51	259556	93/DELNP/2005	11/06/2003	12/06/2002	A DEVICE FOR MEASURING THE EXCHANGE AREA BETWEEN A REAGENT AND THE WALL OF A HOUSING	METTLER-TOLEDO AG	07/11/2008	DELHI
52	259561	1243/DELNP/2005	10/10/2003	02/10/2002	METHOD FOR MANUFACTURING AN ELECTRONIC MODULE	NAGRAID SA	20/03/2009	DELHI
53	259562	885/DEL/2006	30/03/2006		A METHOD FOR RAPID ISOLATION OF RNA AND A KIT THEREOF	COUNCIL OF SCIENTIFIC & INDUSTRIAL RESEARCH	10/09/2010	DELHI
54	259563	1846/DEL/1996	20/08/1996	21/08/1995	MULTIMEDIA OPTICAL DISK, REPRODUCTION APPARATUS AND METHOD FOR ACHIEVING VARIABLE SCENE DEVELOPMENT BASED ON INTERACTIVE CONTROL	PANASONIC CORPORATION	12/09/2008	DELHI
55	259564	777/DEL/2006	22/03/2006 12:16:40		A NOVEL COMPOSITION USEFUL FOR MAKING RADIATION SHIELD MATERIAL	COUNCIL OF SCIENTIFIC & INDUSTRIAL RESEARCH	30/03/2012	DELHI
56	259565	467/DEL/2002	18/04/2002	18/01/2001	A SEPARATOR AND METHOD FOR SEPARATING SOLIDS FROM LIQUIDS	M-I LLC	24/04/2009	DELHI
57	259566	2304/DELNP/2005	19/08/2003	07/12/2002	WLAN SERVICE SYSTEM AND METHOD FOR CHARGING BASED ON USER DATA FLOW.'	HUAWEI TECHNOLOGIES CO., LTD.	21/01/2011	DELHI
58	259567	1049/DEL/2000	23/11/2000		A DIGITAL CLOCK GENERATOR CIRCUIT WITH IN-BUILT FREQUENCY AND DUTY CYCLE CONTROL	STMICROELECTRONICS LTD.,	25/07/2008	DELHI
59	259569	6895/DELNP/2006	29/04/2005	07/05/2004	MULTI-ANTENNA WIRELESS DEVICE	QUALCOMM INCORPORATED	31/08/2007	DELHI
60	259570	1341/DELNP/2004	05/11/2002	05/11/2001	A METHOD OF MANUFACTURING PAPER	DE LA RUE INTERNATIONAL LIMITED	08/01/2010	DELHI
61	259571	1800/DELNP/2004	27/12/2002	27/12/2001	A SYSTEM FOR HANDLING CALL SERVICES IN A WIRELESS TELECOMMUNICATION SYSTEM.	TELEFONAKTIEBOLAGET LM ERICSSON (PUBL)	30/03/2007	DELHI

62	259572	6164/DELNP/2006	15/04/2005	21/04/2004	A METHOD AND SYSTEM FOR COLOR IMAGE ENCODING	SLIPSTREAM DATA INC.	06/11/2009	DELHI
63	259574	1570/DEL/2006	04/07/2006 12:00:22	18/07/2005	OIL FILM BEARING WITH COMPACT HYDRAULIC MOUNT	MORGAN CONSTRUCTION COMPANY	15/06/2007	DELHI
64	259575	6006/DELNP/2007	08/02/2005	02/02/2005	METHOD FOR OBTAINING SITE SPECIFIC RECOMBINATION IN A EUKARYOTIC CELL	INTREXON CORPORATION	17/08/2007	DELHI
65	259576	7673/DELNP/2007	24/03/2006	06/04/2005	METHODS FOR GENERATING STABLY LINKED COMPLEXES COMPOSED OF HOMODIMERS, HOMOTETRAMERS OR DIMERS OF DIMERS AND USES	IBC PHARMACEUTICALS, I NC.	02/11/2007	DELHI
66	259581	2944/DELNP/2005	10/12/2003	03/01/2003	WIRELESS COMMUNICATION DEVICE FOR AUTOMATICALLY SELECTING CALL TYPE BASED ON ENTERED CALLING NUMBER	MOTOROLA, INC.	29/12/2006	DELHI
67	259582	6013/DELNP/2006	11/05/2005	14/05/2004	Inhalable powders containing 6-hydroxy-8-{1-hydroxy-2-[2-(4-methoxy-phenyl)-1,1-dimethyl-ethylamino]-ethyl}-4H-benzo[1,4]oxazin of general formula 1a	BOEHRINGER INGELHEIM INTERNATIONAL GMBH	24/08/2007	DELHI
68	259583	743/DELNP/2007	27/07/2005	29/07/2004	NOVEL ANTI-IGF-IR ANTIBODIES AND USES THEREOF	PIERRE FABRE MEDICAMENT	27/04/2007	DELHI
69	259585	5748/DELNP/2006	30/03/2005	02/04/2004	KEY AGREEMENT AND RE-KEYING OVER A BIDIRECTIONAL COMMUNICATION PATH	RESEARCH IN MOTION LIMITED	27/04/2007	DELHI
70	259586	2194/DELNP/2004	05/02/2003	07/02/2002	AN AIR HANDLER FOR POSITIONING BELOW A MELT SPINNING APPARATUS AND A SYSTEM FOR DEPOSITING A SPUN-BOND LAYER AND A METHOD THEREOF	OERLIKON TEXTILE GMBH & CO.	13/11/2009	DELHI
71	259588	1784/DEL/2008	15/07/1997	05/08/1996	2,5 -substituted phenylketoenol compounds of the formula (I-2)	BAYER AKTIENGESELLSCHAFT	26/12/2008	DELHI
72	259590	6149/DELNP/2007	22/02/2006	23/02/2005	FERMENTED TEA BEVERAGE AND TEA BEVERAGE	OTSUKA PHARMACEUTICAL CO.,LTD	17/08/2007	DELHI
73	259592	7278/DELNP/2006	31/05/2005	01/06/2004	METHOD AND APPARATUS FOR PACKET BASED HANDOFF IN WIRELESS COMMUNICATION SYSTEM	QUALCOMM INCORPORATED	27/04/2007	DELHI
74	259593	8993/DELNP/2007	05/05/2006	24/05/2005	A POLYOLEFIN COMPOSITIONS	MILLIKEN & COMPANY	27/06/2008	DELHI

75	259594	882/DEL/2003	09/07/2003		MUTANTS OF MYCOBACTERIA AND PROCESS THEREOF	INDIAN COUNCIL OF MEDICAL RESEARCH,UNIVERSITY OF DELHI	29/07/2011	DELHI
76	259595	1296/DELNP/2005	11/09/2003	25/10/2002	DELAY TRADING BETWEEN COMMUNICATION LINKS	TELEFONAKTIEBOLAGET LM ERICSSON (PUBL)	26/01/2007	DELHI
77	259596	1043/DEL/2003	27/08/2003	18/09/2002	AUDIO DEVICE HEAT TRANSFERRING	BOSE CORPORATION	27/05/2005	DELHI
78	259599	106/DELNP/2003	13/08/2001	11/08/2000	SYSTEM AND METHOD FOR UNIFIED MESSAGING IN INTER/INTRANET TELEPHONY	THE TRUSTEES OF COLUMBIA UNIVERSITY IN THE CITY OF NEW YORK	03/04/2009	DELHI
79	259600	5948/DELNP/2006	27/04/2005	30/04/2004	PLATFORM	INTER IKEA SYSTEMS B.V.	13/07/2007	DELHI
80	259602	151/DELNP/2003	07/08/2001	08/08/2000	A HYBRID ELECTRONIC ARTICLE SURVEILLANCE MARKER	METGLAS INC.	31/07/2009	DELHI
81	259603	2112/DELNP/2004	28/01/2003	01/02/2002	A DEVICE FOR THE AUTOMATED ANALYSIS OF A LIQUID SAMPLE	DIAGNOSTICA STAGO,	11/05/2007	DELHI
82	259605	2174/DELNP/2003	12/06/2002	12/06/2001	METHOD AND SYSTEM FOR REDUCING THE SIZE OF AN ENCRYPTED MESSAGE AT A HOST SYSTEM	RESEARCH IN MOTION LIMITED	03/04/2009	DELHI
83	259606	552/DELNP/2006	25/08/2003	25/08/2003	AN INJECTION UNIT FOR AN INJECTION MOLDING MACHINE	HUSKY INJECTION MOLDING SYSTEMS LTD.	10/08/2007	DELHI
84	259607	105/DELNP/2003	27/07/2001	28/07/2000	A TEST PROBE FOR A HIGH-FREQUENCY DEVICE	HEI. INC.	03/04/2009	DELHI
85	259608	177/DELNP/2007	15/07/2005	20/07/2004	STOPPER ROD FOR DELIVERING GAS INTO A MOLTEN METAL.	VISUVIUS CRUCIBLE COMPANY	03/08/2007	DELHI
86	259611	IN/PCT/2000/00441/DEL	18/06/1999	19/06/1998	A TELEPHONE NETWORK CALL PROCESSING SYSTEM AND METHOD FOR REAL TIME DETERMINATION OF CLIENT SERVICE AREAS	MUREX SECURITIES LTD.	30/01/2009	DELHI
87	259614	1158/DEL/2003	16/09/2003	01/10/2002	WIRELESS HEADPHONES WITH CONNECTOR SOCKET	AKG ACOUSTICS GmbH	03/04/2009	DELHI
88	259615	45/DEL/2004	09/01/2004	20/01/2003	SLAVE DIGITAL TERMINAL	THOMSON LICENSING S.A	10/02/2006	DELHI
89	259617	IN/PCT/2002/00763/DEL	14/02/2001	16/02/2000	GAS/LIQUID CONTACT TRAY.	SHELL INTERNATIONAL RESEARCH MAATSCHAPPIJ B.V.	02/01/2009	DELHI
90	259618	IN/PCT/2001/00766/DEL	26/02/2001	25/02/2000	A PHASE ERROR DETECTION METHOD & APPARATUS	GE MEDICAL SYSTEMS GLOBAL TECHNOLOGY COMPANY LLC	30/10/2009	DELHI

Publication Under Section 43(2) in Respect of the Grant

Following Patents have been granted and any person interested in opposing these patents under Section 25(2) may at any time within one year from the date of this issue, give notice to the Controller of Patents at the appropriate office, on the prescribed form-7 along with written statement and evidence, if any.

Serial Number	Patent Number	Application Number	Date of Application	Date of Priority	Title of Invention	Name of Patentee	Date of Publication of Abstract u/s 11(A)	Appropriate Office
1	259462	1032/MUMNP/2008	17/05/2006	21/11/2005	A CONTROL AND PROTECTION SYSTEM FOR ASYNCHRONOUS GENERATORS IN THE EVENT OF SYMMETRICAL AND ASYMMETRICAL FAULTS	INGETEAM TECHNOLOGY, S. A.	18/07/2008	MUMBAI
2	259464	2154/MUMNP/2008	05/04/2007	07/04/2006	A PROTEASE DETECTION PRODUCT	MOLOGIC LTD.	09/01/2009	MUMBAI
3	259467	2220/MUMNP/2010	15/04/2009	28/04/2008	BIOFILM REACTOR CONTAINING SPIRAL STRUCTURE AND WATER TREATMENT DEVICE USING THE SAME.	POSTECH ACADEMY-INDUSTRY FOUNDATION	28/01/2011	MUMBAI
4	259469	1320/MUM/2009	29/05/2009		AN IMPROVED PROCESS FOR PREPARATION OF BENZODIAZEPINE DERIVATIVES	CENTAUR PHARMACEUTICALS PVT. LTD.	30/10/2009	MUMBAI
5	259470	1007/MUM/2006	27/06/2006		COMPOSITION OF OIL FOR THIN GAUGE STEEL ROLLING	INDIAN OIL CORPORATION LIMITED	22/08/2008	MUMBAI
6	259471	2279/MUMNP/2008	13/04/2007	14/04/2006	METHODS AND APPARATUS RELATED TO USING A WIRELESS TERMINAL SCRAMBLING IDENTIFIER	QUALCOMM INCORPORATED	16/01/2009	MUMBAI
7	259478	900/MUMNP/2008	31/10/2006	24/12/2005	BALLOON CONTROL RING FOR A TEXTILE MACHINE	OERLIKON TEXTILE GMBH & CO. KG.	27/06/2008	MUMBAI
8	259480	2168/MUMNP/2008	23/06/2006	16/05/2006	SEPARATION METHOD OF NUCLEATED CELLS DERIVED FROM BONE MARROW FOR BONE FORMATION	SEWON CELLONTECH CO., LTD.	09/01/2009	MUMBAI
9	259483	2232/MUM/2007	08/11/2007 15:16:34		DEVICE FOR SIMULATING TYRE DEFLATION OF VEHICLES IN DYNAMIC CONDITION	TATA MOTORS LIMITED	28/12/2007	MUMBAI
10	259485	1139/MUMNP/2008	01/11/2006	11/11/2005	ANIMATED IMAGE CODE APPARATUS FOR GENERATING/DECODING ANIMATED IMAGE CODE AND METHOD THEREOF	COLORZIP MEDIA, INC.,,COLORZIP TECHNOLOGY CO., LTD.	19/09/2008	MUMBAI

11	259496	850/MUMNP/2008	07/09/2006	29/10/2005	THREAD CONNECTING DEVICE	OERLIKON TEXTILE GMBH & CO. KG.	27/06/2008	MUMBAI
12	259499	869/MUMNP/2007	20/12/2005	21/01/2005	SLIDE MISLOAD DETECTION SYSTEM	CYTYC CORPORATION	03/08/2007	MUMBAI
13	259523	293/MUMNP/2007	19/07/2005	30/07/2004	DEVICE AND METHOD FOR PROVIDING IDENTIFICATION INFORMATION FOR CONTAINERS DURING THE SORTING OF MAIL	DEUTSCHE POST AG	03/08/2007	MUMBAI
14	259539	1306/MUMNP/2008	20/12/2006	22/12/2005	METHODS AND APPARATUS FOR REPORTING AND/OR USING CONTROL INFORMATION	QUALCOMM INCORPORATED	19/09/2008	MUMBAI
15	259547	584/MUMNP/2007	30/09/2005	01/10/2004	METHOD AND APPARATUS FOR CAPTURING AND PROCESSING IMAGE DATA,INCLUDING GENERATING A REFOCUSSED VIRTUAL IMAGE	THE BOARD OF TRUSTEES OF THE LELAND STANFORD JUNIOR UNIVERSITY	12/10/2007	MUMBAI
16	259548	1158/MUMNP/2008	20/12/2006	22/12/2005	METHODS AND APPARATUS FOR SELECTING CONTROL CHANNEL REPORTING FORMATS	QUALCOMM INCORPORATED	19/09/2008	MUMBAI
17	259550	401/MUMNP/2008	08/09/2006	15/09/2005	TUNNEL WASHER SYSTEM WITH IMPROVED CLEANING EFFICIENCY	STERIS INC.	21/03/2008	MUMBAI
18	259551	1620/MUMNP/2007	10/03/2005	10/03/2005	METHOD OF ASSEMBLING A KNOCKDOWN STRUCTURE AND A KNOCKDOWN STRUCTURE	YUGENKAISHA JAPAN TSUSYO	09/11/2007	MUMBAI
19	259553	419/MUMNP/2008	22/08/2006	23/08/2006	TRANSLATION LOOKASIDE BUFFER LOCK INDICATOR	QUALCOMM INCORPORATED	26/06/2009	MUMBAI
20	259577	1472/MUM/2009	19/06/2009		A METHOD OF MANUFACTURING A SOLID SYNTHETIC AGGREGATE USING INDUSTRIAL WASTE	VISVESVARAYA NATIONAL INSTITUTE OF TECHNOLOGY	10/07/2009	MUMBAI
21	259578	1148/MUMNP/2010	13/03/2009	13/03/2008	ZIRCONIA-CARBON CONTAINING REFRACTORY MATERIAL AND METHOD FOR PRODUCING SAME	KROSAKI HARIMA CORPORATION	25/11/2011	MUMBAI
22	259597	1421/MUMNP/2006	06/06/2005	10/06/2004	COMMUNICATION TERMINAL DEVICE, BASE STATION DEVICE AND RADIO COMMUNICATION SYSTEM	PANASONIC CORPORATION	13/04/2007	MUMBAI

23	259609	2401/MUM/2010	27/08/2010		A PROCESS FOR PREPARING Mn1-xRhxO2 CATLYST FOR CONVERSION OF CO TO CO2 AT ROOM TEMPERATURE	SALKER ARUN V.,KUNKALEKAR, ROHAN K.	14/01/2011	MUMBAI
24	259613	525/MUMNP/2007	06/10/2005	08/10/2004	A FLOW MOLDING APPARATUS AND METHOD OF MAKING PLURALITY OF MOLDED ARTICLES	VERTEX L.L.C.	03/08/2007	MUMBAI
25	259616	2115/MUM/2008	01/10/2008 15:25:16	15/10/2007	APPARATUS AND METHOD FOR AUTOMATIC GAIN CONTROL	VIA TECHNOLOGIES, INC.	31/10/2008	MUMBAI

Publication Under Section 43(2) in Respect of the Grant

Following Patents have been granted and any person interested in opposing these patents under Section 25(2) may at any time within one year from the date of this issue, give notice to the Controller of Patents at the appropriate office, on the prescribed form-7 along with written statement and evidence, if any.

Serial Number	Patent Number	Application Number	Date of Application	Date of Priority	Title of Invention	Name of Patentee	Date of Publication of Abstract u/s 11(A)	Appropriate Office
1	259454	670/CHENP/2007	15/07/2005	16/07/2004	DERMATOLOGICAL EXTERNAL PHARMACEUTICAL COMPOSITION COMPRISING ANTI-IL-18 RECEPTOR ANTIBODIES	SEKIYAMA ATSUO	24/08/2007	CHENNAI
2	259460	1967/CHE/2008	22/12/2004	26/12/2003	AN INK CONTAINER FOR AN INKJET PRINTER	CANON KABUSHIKI KAISHA	10/02/2012	CHENNAI
3	259463	1276/CHENP/2007	19/09/2005	28/09/2004	METHOD AND DEVICE FOR MEASURING THE ORIENTATION OF AN AIRCRAFT NOSE LANDING GEAR	AIRBUS OPERATIONS SAS	31/08/2007	CHENNAI
4	259465	2777/CHE/2007	27/11/2007	28/11/2006	PROCESS AND DEVICE FOR AXIS STABILIZATION OF AT LEAST ONE PAIR OF MOVING/MOTION AXES OF A MACHINE	ROBERT BOSCH GMBH	02/04/2010	CHENNAI
5	259474	3205/CHENP/2007	22/12/2005	23/12/2004	APPARATUS AND METHOD FOR FACILITATING THE TRANSMISSION OF VAPOUR PARTICLES DIRECTLY INTO A NASAL PASSAGE	TJIA , NG, GHEE	12/10/2007	CHENNAI
6	259476	6130/CHENP/2008	12/04/2007	12/04/2006	CONDENSED IMIDAZOLE DERIVATIVES AS ALDOSTERONE SYNTHASE INHIBITORS	SPEEDEL EXPERIMENTA AG	03/04/2009	CHENNAI
7	259477	278/CHENP/2007	15/07/2005	21/07/2004	METHOD TO IDENTIFY OR EVALUATE COMPOUNDS USEFUL IN THE FIELD OF FRAGRANCES AND AROMAS	GIVAUDAN SA	24/08/2007	CHENNAI
8	259482	3654/CHENP/2008	17/01/2007	17/01/2006	A NOVEL SURFACE EXPOSED HAEMOPHILUS INFLUENZA PROTEIN (PROTEIN E;PE)	FORSGREN, ARNE	13/03/2009	CHENNAI
9	259489	258/CHENP/2008	16/06/2006	17/06/2005	METHODS OF PURIFYING FC REGION CONTAINING PROTEINS	WYETH	19/09/2008	CHENNAI
10	259490	168/CHE/2007	25/01/2007		LAMINATE BOARD AND PROCESS OF PREPARATION THEREOF	NCL INDUSTRIES LTD	18/07/2008	CHENNAI

11	259494	4347/CHENP/2008	13/02/2007	16/02/2006	STAINLESS STEEL WELD OVERLAYS WITH ENHANCED WEAR RESISTANCE	STOODY COMPANY	13/03/2009	CHENNAI
12	259497	2361/CHENP/2005	22/03/2004	24/03/2003	NON-NUCLEOSIDE REVERSE TRANSCRIPTASE INHIBITORS I FOR TREATING HIV MEDIATED DISEASES	F. HOFFMANN-LA ROCHE AG	31/08/2007	CHENNAI
13	259506	3187/CHENP/2007	20/12/2005	21/12/2004	CATALYST, A PROCESS FOR ITS PREPARATION, AND ITS USE	ALBEMARLE NETHERLANDS B.V.	07/09/2007	CHENNAI
14	259507	5414/CHENP/2008	10/04/2007	11/04/2006	ANTIBODIES AGAINST INSULIN-LIKE GROWTH FACTOR I RECEPTOR	F. HOFFMANN-LA ROCHE AG	20/03/2009	CHENNAI
15	259511	1054/CHENP/2007	12/09/2005	13/09/2004	NITROGENOUS HETEROCYCLIC COMPOUND AND PHARMACEUTICAL COMPOSITION THEREOF	ONO PHARMACEUTICAL CO., LTD.	17/08/2007	CHENNAI
16	259515	7129/CHENP/2008	25/05/2006	25/05/2006	COMPOSITE OF METAL AND RESIN, AND METHOD FOR MANUFACTURING SAME	TAISEI PLAS CO., LTD.	27/03/2009	CHENNAI
17	259517	2065/CHENP/2006	08/12/2004	09/12/2003	THERMOPLASTIC COMPOSITION	DOW GLOBAL TECHNOLOGIES LLC	06/07/2007	CHENNAI
18	259542	1500/CHENP/2007	13/10/2005	13/10/2004	A METHOD OF ASSEMBLING AN ADAPTER AND THE CUP OF A SET OF ACETABULAR CUP PROSTHESIS	GRADEL, Thomas	31/08/2007	CHENNAI
19	259543	4812/CHENP/2006	03/06/2005	03/06/2004	INTERMEDIATES FOR THE PREPARATION OF ANALOGS OF HALICHONDRIN B	EISAI R & D MANAGEMENT CO. LTD.,	05/10/2007	CHENNAI
20	259546	1557/CHENP/2007	19/09/2005	14/10/2004	PROCESS FOR THE GAS-PHASE POLYMERIZATION OF OLEFINS	BASELL POLIOLEFINE ITALIA S.R.L	31/08/2007	CHENNAI
21	259552	794/CHE/2006	02/05/2006 17:02:27	02/05/2005	TRANSMISSION RATE CONTROL METHOD AND MOBILE STATION	NTT DOCOMO, INC.	08/06/2007	CHENNAI
22	259558	3896/CHENP/2006	25/04/2005	23/04/2004	A METHODS FOR STABILIZING PROTEINS AND A COMPOSITION COMPRISING PROTEIN	EXPEDEON LIMITED	15/06/2007	CHENNAI
23	259559	3573/CHENP/2008	19/01/2007	20/01/2006	A METHOD FOR GENERATING A PLURALITY OF PILOT SEQUENCES FOR A PLURALITY OF TRANSMIT ANTENNAS	QUALCOMM INCORPORATED	13/03/2009	CHENNAI

24	259560	4910/CHENP/2008	12/03/2007	17/03/2006	HIGH-STRENGTH STEEL MATERIAL EXCELLENT IN WELDABILITY AND METHOD OF MANUFACTURING THE SAME	KABUSHIKI KAISHA KOBE SEIKO SHO (KOBE STEEL, LTD.)	13/03/2009	CHENNAI
25	259587	870/CHE/2004	27/08/2004	04/09/2003	HEAT-CONDUCTING PLATES MADE FROM EXPANDED GRAPHITE AND METHOD FOR THEIR PRODUCTION	SGL CARBON AG	04/03/2005	CHENNAI
26	259589	2046/CHENP/2007	21/09/2005	13/10/2004	METHOD AND APPARATUS FOR TREATING MATERIALS AND MATERIAL MIXTURES	FRACTIVATOR OY	07/09/2007	CHENNAI
27	259591	1522/CHE/2008	23/06/2008		AN ENCLOSURE ARRANGEMENT FOR A CONTROL PANEL AND METHOD OF COOLING	CATERPILLAR INC.	01/01/2010	CHENNAI
28	259610	305/CHENP/2007	22/06/2005	25/06/2004	A METHOD FOR AUTHENTICATING AN INDIVIDUAL AT AN AUTHENTICATING DEVICE	KONINKLIJKE PHILIPS ELECTRONICS N.V.	24/08/2007	CHENNAI
29	259612	905/CHENP/2007	06/09/2005	08/09/2004	HYDROCRACKING CATALYST COMPOSITION	SHELL INTERNATIONALE RESEARCH MAATSCHAPPIJ B.V.	24/08/2007	CHENNAI

Publication Under Section 43(2) in Respect of the Grant

Following Patents have been granted and any person interested in opposing these patents under Section 25(2) may at any time within one year from the date of this issue, give notice to the Controller of Patents at the appropriate office, on the prescribed form-7 along with written statement and evidence, if any.

Serial Number	Patent Number	Application Number	Date of Application	Date of Priority	Title of Invention	Name of Patentee	Date of Publication of Abstract u/s 11(A)	Appropriate Office
1	259472	5018/KOLNP/2007	05/07/2006	06/07/2005	A METHOD OF CHANGING A FONT SIZE OF A MESSAGE IN A MOBILE COMMUNICATION SYSTEM	SAMSUNG ELECTRONICS CO. LTD.	27/06/2008	KOLKATA
2	259493	1850/KOLNP/2006	07/01/2005	16/01/2004	DERIVATIVES OF 1,4-DIAZABICYCLO[3.2.1] OCTANECARBOXAMIDE, PREPARATION METHOD THEREOF AND USE OF SAME IN THERAPEUTICS	SANOFI AVENTIS	11/05/2007	KOLKATA
3	259501	3165/KOLNP/2006	26/03/2005	13/04/2004	SERIES MOTOR AND METHOD FOR CONTROLLING THE SAME.	C.& E.FEIN GMBH	08/06/2007	KOLKATA
4	259502	2259/KOLNP/2008	12/12/2006	12/12/2005	PROCESS FOR PRODUCING A SATURATED HYDROCARBON COMPONENT	NESTE OIL OYJ	16/01/2009	KOLKATA
5	259512	35/KOL/2006	16/01/2006	07/02/2005	AQUEOUS ADHESIVE COMPOSITION INTENDED FOR GLUING CORRUGATE CARDBOARD AND PROCESS FOR PREPARING CORRUGATE CARDBOARD	ROQUETTE FRERES	03/08/2007	KOLKATA
6	259519	3360/KOLNP/2006	07/06/2005	07/06/2004	METHODS AND APPARATUSES FOR PERFORMING A HANDOVER IN MOBILE COMMUNICATION SYSTEM	SAMSUNG ELECTRONICS CO. LTD.	15/06/2007	KOLKATA
7	259522	1183/KOL/2007	28/08/2007	18/09/2006	A LICENSE SERVER FOR ADMINISTRATION OF LICENSES	SIEMENS ENTERPRISE COMMUNICATIONS GMBH & CO. KG.	16/05/2008	KOLKATA

8	259524	1114/KOL/2006	23/10/2006	31/10/2005	A METHOD AND APPARATUS FOR SENSING AND TRANSMITTING HAND WRITTEN DATA IN A MOBILE COMMUNICATION TERMINAL	SAMSUNG ELECTRONICS CO.LTD.	06/07/2007	KOLKATA
9	259540	3316/KOLNP/2007	24/02/2006	25/02/2005	INDOLE COMPOUND	ONO PHARMACEUTICAL CO., LTD.	18/01/2008	KOLKATA
10	259541	997/KOLNP/2008	01/08/2006	08/09/2005	BENZIMIDAZOLE DERIVATIVES	SBIO PTE LTD	19/12/2008	KOLKATA
11	259544	1371/KOLNP/2005	01/10/2003	27/01/2003	METHOD AND APPARATUS FOR RECORDING INFORMATION, MANAGING A DEFECTIVE AREA IN A DATA AREA OF AN OPTICAL RECORDING MEDIUM	LG ELECTORNICS INC.,	28/12/2007	KOLKATA
12	259545	669/KOL/2006	04/07/2006		METHOD OF 2D-NMR CORRELATION SPECTROSCOPY WITH DOUBLE QUANTUM FILTRATION FOLLOWED BY EVOLUTION OF SINGLE QUANTUM TRANSITIONS	BRUKER BIOSPIN AG	03/04/2009	KOLKATA
13	259557	245/KOL/2006	23/03/2006		A FRICTION STIR SURFACING METHOD TO PRODUCE A COMPACTED SURFACE LAYER ON A SUBSTRATE USING A METALLIC POWDER MATERIAL	BHARAT HEAVY ELECTRICALS LIMITED	12/10/2007	KOLKATA
14	259568	4943/KOLNP/2008	01/06/2007	02/06/2006	FLEXIBLE HIGH THERMOMECHANICAL STRESS-RESISTANT AND FIREPROOF HALOGEN-FREE THERMOPLASTIC COMPOSITIONS	ARKEMA FRANCE	20/03/2009	KOLKATA
15	259573	346/KOL/2008	26/02/2008	26/03/2007	A FUEL CONTAMINANT SENSOR AND A DEVICE FOR DETECTING A CHANGE IN THE CONTENTS OF A FUEL-WATER SEPARATOR	GM GLOBAL TECHNOLOGY OPERATIONS, INC.	03/10/2008	KOLKATA

16	259579	288/KOL/2008	18/02/2008	12/03/2007	AN ENGINE KNOCK CONTROL SYSTEM AND A METHOD OF CONTROLLING AN ENGINE KNOCK IN AN ENGINE WITH TURBOCHARGER	GM GLOBAL TECHNOLOGY OPERATIONS, INC.	03/10/2008	KOLKATA
17	259580	389/KOL/2008	29/02/2008	13/04/2007	AN INTERNAL COMBUSTION ENGINE WITH OIL FEED SYSTEM FOR HYDRAULICALLY ACTUATED CAM PHASER	GM GLOBAL TECHNOLOGY OPERATIONS, INC.	17/04/2009	KOLKATA
18	259584	853/KOLNP/2008	17/04/2003	29/04/2002	NOVEL COMPOUND AS OPIOID RECEPTOR MODULATORS	JANSSEN PHARMACEUTICA, N.V.	28/11/2008	KOLKATA
19	259598	4567/KOLNP/2007	31/05/2006	02/06/2005	SCREW PUMP OF SINGLE ENTRY, DOUBLE SHAFT CONSTRUCTION WITH TWO SCREW SHAFTS	JOH. HEINR. BORNEMANN GMBH	15/02/2008	KOLKATA
20	259601	285/KOL/2008	18/02/2008	09/03/2007	A METHOD FOR TRANSMISSION OF A CONTROLLING VEHICLE THROUGH INHIBITING A SHIFT IN OPPOSITE DIRECTION OF THE MOVING VEHICLE	GM GLOBAL TECHNOLOGY OPERATIONS, INC.	17/04/2009	KOLKATA
21	259604	854/KOL/2006	23/08/2006	29/09/2006	A MULTI-SPEED TRANSMISSION AND A METHOD OF ASSEMBLING A TRANSMISSION	GM GLOBAL TECHNOLOGY OPERATIONS, INC.	11/04/2008	KOLKATA

CONTINUED TO PART-3

CONTINUED FROM PART- 2

INTRODUCTION

In view of the recent amendment made in the Designs (Amendment) Rules, 2008 with effect from 17/06/2008, Publication of the matter relating to Designs is being published in the Official Journal of The Patent Office. This Journal is being published on weekly basis on every Friday covering the various proceedings on Designs as required according to the provisions of under Rule 22, 25, 27 and 39 of the Design (Amendment) Rules, 2008. All the enquiries on this Official Journal and other information as required by the public should be addressed to the Controller General of Patents, Designs & Trade Marks. Suggestions and comments are requested from all quarters so that the content can be enriched.

COPYRIGHT PUBLICATION

SL NO	CASE NUMBERS	RENEWED ON
1.	192471	25.02.2014
2.	192986	20.02.2014
3.	194064	20.02.2014
4.	194376	20.02.2014
5.	194377	20.02.2014
6.	194995	20.02.2014
7.	196243	20.02.2014
8.	196263	20.02.2014
9.	199727	25.02.2014
10.	202340	20.02.2014
11.	204484	20.02.2014
12.	238465	20.02.2014
13.	245994	20.02.2014
14.	246141	20.02.2014
15.	246442	20.02.2014
16.	249201	20.02.2014
17.	249664	20.02.2014
18.	249807	20.02.2014
19.	250166	20.02.2014
20.	193304	25.02.2014
21.	194659	20.02.2014
22.	189540	26.02.2014
23.	190519	20.02.2014
24.	192015	07.03.2014

THE DESIGNS ACT 2000
SECTION 30
DESIGN ASSIGNMENT

The Design stands in the name of SARA LEE HOUSEHOLD AND BODY CARE NEDERLAND B.V. registered under the Designs Act, 2000 has been assigned in the Register of Designs in the name as follows:-

Design Nos.	Class	Name
224157	23-04	SARA LEE HOUSEHOLD CARE NEDERLAND B.V OF, VLEUTENSEVAART 100, 3532 AD UTRECHT, THE NETHERLANDS, A DUTCH COMPANY

REGISTRATION OF DESIGNS

The following designs have been registered. They are now open for public inspection. In the following each entry the Date of Registration is shown. The Priority Number, Priority Date and Priority Country are also shown

DESIGN NUMBER	250217
CLASS	15-04
1)M/S. CATERPILLAR INC.; AN AMERICAN CORPORATION, OF THE ADDRESS 100 NE ADAMS STREET, PEORIA, IL 61269, UNITED STATES OF AMERICA	
DATE OF REGISTRATION	17/12/2012
TITLE	UNDERCARRIAGE TRACK LINK FOR MOBILE EARTHMOVING MACHINE

PRIORITY

PRIORITY NUMBER	DATE	COUNTRY
29/426,091	29/06/2012	U.S.A.

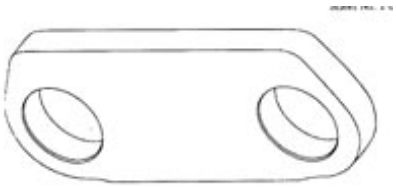

DESIGN NUMBER	256459
CLASS	07-06
1)MA DESIGN INDIA PRIVATE LIMITED, A COMPANY INCORPORATED IN INDIA HAVING ITS PRINCIPAL PLACE OF BUSINESS AT A-41, SECTOR-80, PHASE-II, NOIDA-201305, U.P. INDIA	
DATE OF REGISTRATION	16/09/2013
TITLE	TONGS
PRIORITY NA	

DESIGN NUMBER	256581
CLASS	12-15
1)TVS SRICHAKRA LIMITED, AN INDIAN COMPANY, 7B, WEST VELI STREET, MADURAI 625001, TAMIL NADU, INDIA	
DATE OF REGISTRATION	18/09/2013
TITLE	TYRE
PRIORITY NA	

DESIGN NUMBER	253674
CLASS	12-16
1)SONA KOYO STEERING SYSTEMS LTD., AN INDIAN COMPANY, OF 38/6 DELHI-JAIPUR ROAD, NH-8, GURGAON-122001, HARYANA, INDIA	
DATE OF REGISTRATION	03/05/2013
TITLE	PART OF STOPPER FOR POWER STEERING OF A VEHICLE
PRIORITY NA	

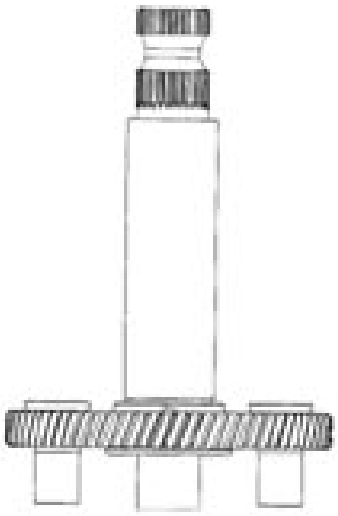

DESIGN NUMBER	251501
CLASS	09-07
1)ACCESS BUSINESS GROUP INTERNATIONAL LLC, 7575 FULTON STREET EAST, ADA, MICHIGAN 49355, U.S.A., A MICHIGAN LIMITED LIABILITY COMPANY, U.S.A.	
DATE OF REGISTRATION	07/02/2013
TITLE	CONTAINER CLOSURE

PRIORITY

PRIORITY NUMBER	DATE	COUNTRY
29/430,194	22/08/2012	U.S.A.

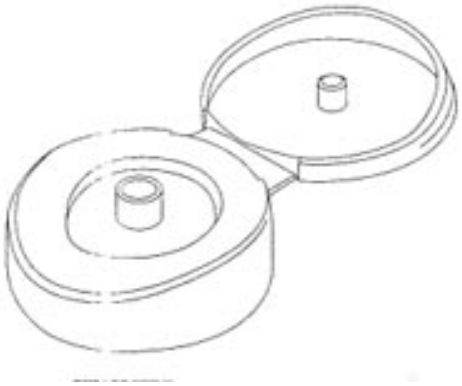

DESIGN NUMBER	254381
CLASS	25-02
1)M/S. DIAMOND FRAMES PRIVATE LIMITED, A COMPANY INCORPORATED UNDER INDIAN COMPANIES ACT, 1956, HAVING PLACE OF BUSINESS AT #4, CORPORATION SHOPPING COMPLEX, PROJECT-II, BREWERY ROAD, SHENOY NAGAR, CHENNAI-600030, INDIA	
DATE OF REGISTRATION	06/06/2013
TITLE	METAL STUD PARTITION SYSTEM
PRIORITY NA	

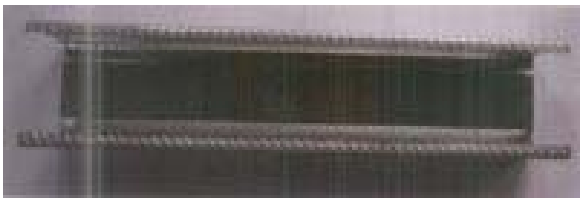

DESIGN NUMBER	249281
CLASS	15-02
1)DOSATRON INTERNATIONAL RUE PASCAL F-33370 TRESSES, BORDEAUX FRANCE A FRENCH COMPANY INCORPORATED UNDER THE LAWS OF FRANCE	
DATE OF REGISTRATION	06/11/2012
TITLE	PUMP

PRIORITY

PRIORITY NUMBER	DATE	COUNTRY
002066563-0001	02/07/2012	OHIM

DESIGN NUMBER	254689
CLASS	05-06
1)TANUJ GROVER (INDIAN NATIONAL) TRADING AS M/S. T. G. INDUSTRIES, C-57, UDYOG KUNJ, SITE-5, PANKI, KANPUR, UTTAR PRADESH	
DATE OF REGISTRATION	24/06/2013
TITLE	SEPARATOR SHEET FOR BATTERIES

PRIORITY NA

DESIGN NUMBER	250223
CLASS	15-04
1)CATERPILLAR INC.; AN AMERICAN CORPORATION, OF THE ADDRESS 100 NE ADAMS STREET, PEORIA, IL 61269, UNITED STATES OF AMERICA	
DATE OF REGISTRATION	17/12/2012
TITLE	UNDERCARRIAGE TRACK SHOE FOR MOBILE EARTHMOVING MACHINE

PRIORITY

PRIORITY NUMBER	DATE	COUNTRY
29/426,090	29/06/2012	U.S.A.

DESIGN NUMBER	256461	
CLASS	07-07	
1)MA DESIGN INDIA PRIVATE LIMITED, A COMPANY INCORPORATED IN INDIA HAVING ITS PRINCIPAL PLACE OF BUSINESS AT A-41, SECTOR-80, PHASE-II, NOIDA-201305, U.P. INDIA		
DATE OF REGISTRATION	16/09/2013	
TITLE	CONTAINER	
PRIORITY NA		
DESIGN NUMBER	256180	
CLASS	08-06	
1)SHOBHNABEN R BARASIYA (ADULT & INDIAN NATIONALS) AND SOLE PROPRIETOR OF SURAJ METAL (INDIAN PROPRIETARY CONCERN) HAVING PLACE OF BUSINESS AT-4, PARSANA SOCIETY, NR. 73, SCHOOL RAJKOT-GUJARAT (INDIA)		
DATE OF REGISTRATION	03/09/2013	
TITLE	HANDLE	
PRIORITY NA		
DESIGN NUMBER	256262	
CLASS	03-01	
1)RAMNEET KAUR SAHOTA, NATIONALITY INDIAN WHOES ADDRESS IS V-264, 1ST FLOOR, RAJOURI GARDEN, NEW DELHI-110027 (INDIA)		
DATE OF REGISTRATION	06/09/2013	
TITLE	LAPTOP BAG	
PRIORITY NA		

DESIGN NUMBER	256361
CLASS	13-03
1)YAZAKI CORPORATION, 4-28, MITA 1-CHOME, MINATO-KU, TOKYO 108-8333, JAPAN, A JAPANESE CORPORATION	
DATE OF REGISTRATION	10/09/2013
TITLE	HOUSING FOR ELECTRICAL CONNECTOR

PRIORITY

PRIORITY NUMBER	DATE	COUNTRY
2013-007702	05/04/2013	JAPAN

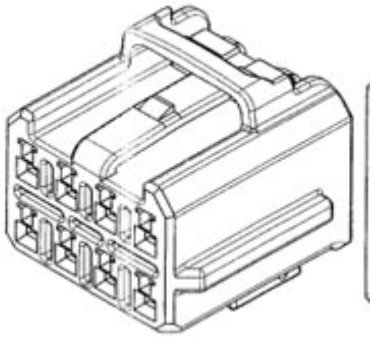

DESIGN NUMBER	256789
CLASS	12-08
1)HONDA MOTOR CO., LTD., A JAPANESE CORPORATION, OF 1-1, MINAMI-AOYAMA 2-CHOME, MINATO-KU, TOKYO, 107-8556 JAPAN	
DATE OF REGISTRATION	26/09/2013
TITLE	CAR

PRIORITY

PRIORITY NUMBER	DATE	COUNTRY
2013-007892	09/04/2013	JAPAN

DESIGN NUMBER	253415
CLASS	08-03
1)WIRTGEN GMBH, REINHARD-WIRTGEN-STR.2., 53578 WINDHAGEN, GERMANY	
DATE OF REGISTRATION	25/04/2013
TITLE	CHISEL HOLDER

PRIORITY

PRIORITY NUMBER	DATE	COUNTRY
EM 002147884	05/12/2012	OHIM

DESIGN NUMBER	250842	
CLASS	14-02	
1)ZEN TECHNOLOGIES LIMITED, WHOSE ADDRESS IS B-42, INDUSTRIAL ESTATE, SANATHNAGAR, HYDERABAD-500018, ANDHRA PRADESH AND WHOSE NATIONALITY IS INDIA		
DATE OF REGISTRATION	07/01/2013	
TITLE	DISPLAY DEVICE FOR TARGET PRACTICE SYSTEM	
PRIORITY NA		

DESIGN NUMBER	254250	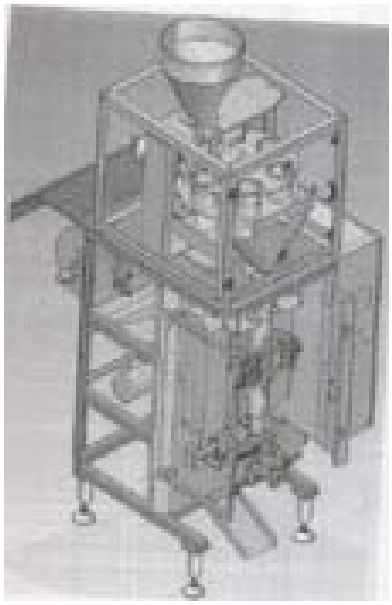
CLASS	15-99	
1)NICHROME INDIA LIMITED, A COMPANY INCORPORATED UNDER THE INDIAN COMPANIES ACT, SAFIRE PARK, GALLERIA NO. 4, PUNE MUMBAI ROAD, WAKDEWADI, PUNE-411005, MAHARASHTRA, INDIA		
DATE OF REGISTRATION	03/06/2013	
TITLE	SALT PACKAGING MACHINE	
PRIORITY NA		

DESIGN NUMBER	256460	
CLASS	07-03	
1)MA DESIGN INDIA PRIVATE LIMITED, A COMPANY INCORPORATED IN INDIA HAVING ITS PRINCIPAL PLACE OF BUSINESS AT A-41, SECTOR-80, PHASE-II, NOIDA-201305, U.P. INDIA		
DATE OF REGISTRATION	16/09/2013	
TITLE	CHEESE SPREADER	
PRIORITY NA		

DESIGN NUMBER	256583	
CLASS	12-15	
1)TVS SRICHAKRA LIMITED, AN INDIAN COMPANY, 7B, WEST VELI STREET, MADURAI 625 001, TAMIL NADU, INDIA		
DATE OF REGISTRATION	18/09/2013	
TITLE	TYRE	
PRIORITY NA		

DESIGN NUMBER	250276	
CLASS	23-04	
1)KHAITAN (INDIA) LIMITED, AN INDIAN COMPANY HAVING ITS REGISTERED OFFICE AT 46C, JAWAHAR LAL NEHRU ROAD, KOLKATA 700071, WEST BENGAL, INDIA.		
DATE OF REGISTRATION	18/12/2012	
TITLE	AIR COOLER	
PRIORITY NA		

DESIGN NUMBER	254150	
CLASS	23-04	
1)BALDEV KUMAR B. VARMA, A BRITISH NATIONAL, HAVING PERMANENT RESIDENCE AT 19, MIDDLE LANE, DISCOVERY BAY MIDVALE VILLAGE, MARINE VIEW, 18/F FLAT B & PENTHOUSE B, LANTAU ISLAND NT, HONG KONG (ALSO AT A1/701, PARSAVNATH EXOTICA APARTMENTS, GOLF COURSE ROAD, GURGAON, HARYANA)		
DATE OF REGISTRATION	29/05/2013	
TITLE	AIR COOLER	
PRIORITY NA		

DESIGN NUMBER	252355	
CLASS	24-01	
1)IVF TECH APS, HAVING NATIONALITY OF DENMARK OF THE ADDRESS AT TOPPEVADVEJ 34-38, GANLØSE 3660 STENLØSE, DENMARK		
DATE OF REGISTRATION	15/03/2013	
TITLE	TABLE TOP FOR CONDUCTING IN-VITRO FERTILIZATION	
PRIORITY NA		

DESIGN NUMBER	256462	
CLASS	06-07	
1)MA DESIGN INDIA PRIVATE LIMITED, A COMPANY INCORPORATED IN INDIA HAVING ITS PRINCIPAL PLACE OF BUSINESS AT A-41, SECTOR-80, PHASE-II, NOIDA-201305, U.P. INDIA		
DATE OF REGISTRATION	16/09/2013	
TITLE	PHOTO FRAME	
PRIORITY NA		

DESIGN NUMBER	256362	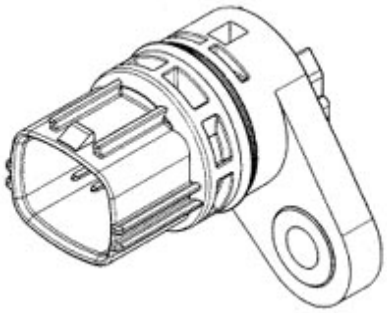
CLASS	13-03	
1)YAZAKI CORPORATION, 4-28, MITA 1-CHOME, MINATO-KU, TOKYO 108-8333, JAPAN, A JAPANESE CORPORATION		
DATE OF REGISTRATION	10/09/2013	
TITLE	HOUSING FOR ELECTRICAL CONNECTOR	
PRIORITY		

PRIORITY NUMBER	DATE	COUNTRY
2013-007703	05/04/2013	JAPAN

DESIGN NUMBER	256638	
CLASS	15-99	
1)NITIN BORKAR (AN INDIAN NATIONAL) TRADING AS M/S. INNOVATIVE SOLUTIONS, PLOT NO. 41-A, AMBIKA NAGAR, MANEWADA, RING ROAD, NAGPUR-4400024 (M.S.)		
DATE OF REGISTRATION	20/09/2013	
TITLE	BAG PACKING AND STITCHING MACHINE	
PRIORITY NA		
DESIGN NUMBER	250843	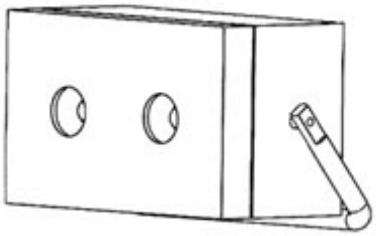
CLASS	22-04	
1)ZEN TECHNOLOGIES LIMITED, WHOSE ADDRESS IS B-42, INDUSTRIAL ESTATE, SANATHNAGAR, HYDERABAD-500018, ANDHRA PRADESH AND WHOSE NATIONALITY IS INDIA		
DATE OF REGISTRATION	07/01/2013	
TITLE	DETECTION DEVICE FOR TARGET PRACTICE SYSTEM	
PRIORITY NA		
DESIGN NUMBER	254564	
CLASS	12-11	
1)PIAGGIO & C. S.P.A., A CORPORATION ORGANIZED AND EXISTING UNDER THE LAWS OF ITALY, OF VIALE RINALDO PIAGGIO, 25, I-56025 PONTEDERA, PISA, ITALY		
DATE OF REGISTRATION	18/06/2013	
TITLE	MOTOR SCOOTER	
PRIORITY NA		

DESIGN NUMBER	253890
CLASS	09-03
1)SUNITA PURI (AN INDIAN NATIONAL) TRADING AS M/S. DELUX PETROCHEM (INDIA), B-91, CO-OPERATIVE INDUSTRIAL ESTATE, UDYOG NAGAR, KANPUR, U.P.	
DATE OF REGISTRATION	16/05/2013
TITLE	CONTAINER
PRIORITY NA	

DESIGN NUMBER	252733
CLASS	05-06
1)THE PROCTER & GAMBLE COMPANY, A BODY CORPORATE INCORPORATED UNDER THE LAWS OF UNITED STATES OF AMERICA, HAVING ITS REGISTERED OFFICE AT ONE PROCTER & GAMBLE PLAZA, CINCINNATI, OHIO - 45202, UNITED STATES OF AMERICA	
DATE OF REGISTRATION	01/04/2013
TITLE	BACKSHEET OF A DIAPER

PRIORITY

PRIORITY NUMBER	DATE	COUNTRY
695079601	02/10/2012	WIPO

DESIGN NUMBER	250278
CLASS	23-04
1)KHAITAN (INDIA) LIMITED, AN INDIAN COMPANY HAVING ITS REGISTERED OFFICE AT 46C, JAWAHAR LAL NEHRU ROAD, KOLKATA 700071, WEST BENGAL, INDIA	
DATE OF REGISTRATION	18/12/2012
TITLE	AIR COOLER
PRIORITY NA	

DESIGN NUMBER	253694
CLASS	06-01
1)WIM PLAST LIMITED, A PUBLIC LIMITED COMPANY REGISTERED UNDER THE PROVISION OF INDIAN COMPANIES ACT, 1956, HAVING OFFICE ADDRESS AT 5 CORPORATE AVENUE, 'B' WING, CELLO HOUSE, SONAWALA ROAD, GOREGAON (EAST), MUMBAI-400063, MAHARASHTRA, INDIA	
DATE OF REGISTRATION	06/05/2013
TITLE	CHAIR
PRIORITY NA	

DESIGN NUMBER	253438
CLASS	05-05
1)KANG NA HSIUNG ENTERPRISE CO., LTD., A COMPANY OF TAIWAN OF 77-1, TUNG AN LIAO, MIN AN LI, CHIA LI DIST., TAINAN CITY-72256, TAIWAN	
DATE OF REGISTRATION	26/04/2013
TITLE	TEXTILE FABRIC

PRIORITY

PRIORITY NUMBER	DATE	COUNTRY
101306664	12/11/2012	TAIWAN

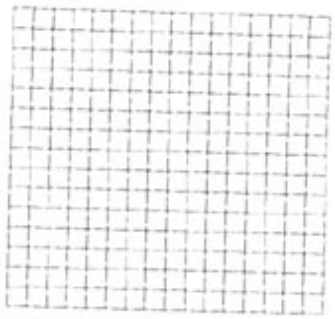

DESIGN NUMBER	255418
CLASS	28-03
1)LA-PAR CREATIONS., (A PARTNERSHIP FIRM REGISTERED UNDER INDIAN PARTNERSHIP ACT, 1932), AT C-1/C-2, SHREYAS INDUSTRIAL ESTATE, OFF. W. E. HIGHWAY (BEHIND JAY COACH), GOREGAON (EAST), MUMBAI-400063. MAHARASHTRA, INDIA. WHOSE PARTNERS ARE (1) RAKESH JAIN. (INDIAN NATIONAL), (2) ANITA JAIN. (INDIAN NATIONAL), & (3) INDU JAIN. (INDIAN NATIONAL), ALL ARE HAVING ABOVE ADDRESS	
DATE OF REGISTRATION	26/07/2013
TITLE	FOOT SCRUBBER
PRIORITY NA	

DESIGN NUMBER	252196
CLASS	14-01
1)APPLE INC., 1 INFINITE LOOP, CUPERTINO, CALIFORNIA 95014, UNITED STATES OF AMERICA, A CORPORATION INCORPORATED IN THE STATE OF CALIFORNIA	
DATE OF REGISTRATION	07/03/2013
TITLE	MEDIA PLAYER

PRIORITY

PRIORITY NUMBER	DATE	COUNTRY
29/431,569	09/09/2012	U.S.A.

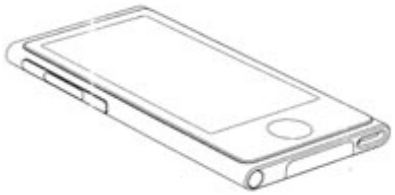

DESIGN NUMBER	255979
CLASS	08-09
1)M/S SANGAM METAL PRODUCTS, A PROPRIETORSHIP FIRM WHOSE PROPRIETOR IS SHALENDR KUMAR S/O SH. RAMESH CHANDRA HAVING ITS OFFICE AT 9/137, GANDHI BARA, KANWARI GANJ, ALIGARH-202001 (U.P.) INDIA, INDIAN NATIONAL	
DATE OF REGISTRATION	23/08/2013
TITLE	DOOR ALDROP
PRIORITY NA	

DESIGN NUMBER	255352
CLASS	09-07
1)H2O4K9, INC., A CALIFORNIA CORPORATION OF 171 N. IVY AVENUE, MONROVIA, CA 91016, UNITED STATES OF AMERICA	
DATE OF REGISTRATION	19/07/2013
TITLE	BOTTLE CAP

PRIORITY

PRIORITY NUMBER	DATE	COUNTRY
29/443,756	22/01/2013	U.S.A.

DESIGN NUMBER	254417
CLASS	13-03
1)MR. MR. PRASHANT MADHAV DIXIT, WITH HIS ADDRESS AS VIJETA SWITCHGEAR PVT. LTD., E-26, MIDC KUPWAD BLOCK, SANGLI-416436, MAHARASHTRA, AN INDIAN NATIONAL.	
DATE OF REGISTRATION	11/06/2013
TITLE	DIGITAL CONTROL PANEL FOR SUBMERSIBLE PUMP
PRIORITY NA	

DESIGN NUMBER	254010
CLASS	21-01
1)FERRARI S.P.A., VIA EMILIA EST 1163 I-41100 MODENA (ITALY)	
DATE OF REGISTRATION	21/05/2013
TITLE	TOY-CAR

PRIORITY

PRIORITY NUMBER	DATE	COUNTRY
002147447	04/12/2012	EUROPEAN UNION

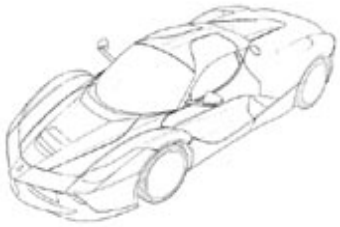

DESIGN NUMBER	251337
CLASS	14-99
1)SAMSUNG ELECTRONICS CO., LTD., A KOREAN COMPANY, OF 129, SAMSUNG-RO, YEONGTONG-GU, SUWON-SI, GYEONGGI-DO, 443-742, REPUBLIC OF KOREA	
DATE OF REGISTRATION	31/01/2013
TITLE	CASE FOR PORTABLE ELECTRONIC DEVICE

PRIORITY

PRIORITY NUMBER	DATE	COUNTRY
30-2012-0041332	28/08/2012	REPUBLIC OF KOREA

DESIGN NUMBER	256467
CLASS	26-01
1)MA DESIGN INDIA PRIVATE LIMITED, A COMPANY INCORPORATED IN INDIA HAVING ITS PRINCIPAL PLACE OF BUSINESS AT A-41, SECTOR-80, PHASE-II, NOIDA-201305, U.P. INDIA	
DATE OF REGISTRATION	16/09/2013
TITLE	CANDLE HOLDER
PRIORITY NA	

DESIGN NUMBER	253696
CLASS	06-01
1)WIM PLAST LIMITED, A PUBLIC LIMITED COMPANY REGISTERED UNDER THE PROVISION OF INDIAN COMPANIES ACT, 1956, HAVING OFFICE ADDRESS AT 5 CORPORATE AVENUE, 'B' WING, CELLO HOUSE, SONAWALA ROAD, GOREGAON (EAST), MUMBAI-400063, MAHARASHTRA, INDIA	
DATE OF REGISTRATION	06/05/2013
TITLE	STOOL
PRIORITY NA	

DESIGN NUMBER	253935
CLASS	23-02
1)SACHIN BABY.K, PROPRIETOR OF M/S. GREEN EDEN AGRO & CO., AT MAROTTICHAL POST, TRICHUR-680014, KERALA, INDIA, INDIAN-NATIONAL OF ABOVE ADDRESS	
DATE OF REGISTRATION	17/05/2013
TITLE	SOAP BOX
PRIORITY NA	

DESIGN NUMBER	251335
CLASS	14-99
1)SAMSUNG ELECTRONICS CO., LTD., A KOREAN COMPANY, OF 129, SAMSUNG-RO, YEONGTONG-GU, SUWON-SI, GYEONGGI-DO, 443-742, REPUBLIC OF KOREA	
DATE OF REGISTRATION	31/01/2013
TITLE	CASE FOR PORTABLE ELECTRONIC DEVICE

PRIORITY

PRIORITY NUMBER	DATE	COUNTRY
30-2012-0041331	28/08/2012	REPUBLIC OF KOREA

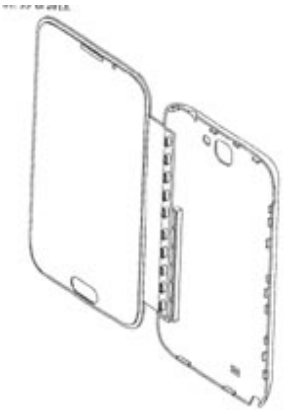

DESIGN NUMBER	256466
CLASS	26-01
1)MA DESIGN INDIA PRIVATE LIMITED, A COMPANY INCORPORATED IN INDIA HAVING ITS PRINCIPAL PLACE OF BUSINESS AT A-41, SECTOR-80, PHASE-II, NOIDA-201305, U.P. INDIA	
DATE OF REGISTRATION	16/09/2013
TITLE	CANDLE HOLDER
PRIORITY NA	

DESIGN NUMBER	251942
CLASS	15-99
1)GENERAL ELECTRIC COMPANY, A NEW YORK CORPORATION INCORPORATED UNDER THE LAWS OF UNITED STATES OF AMERICA HAVING ITS OFFICE AT 1 RIVER ROAD, SCHENECTADY, NEW YORK 12345 UNITED STATES OF AMERICA	
DATE OF REGISTRATION	28/02/2013
TITLE	SYSTEM FOR MACHINERY PROTECTION AND CONDITION MONITORING
PRIORITY NA	

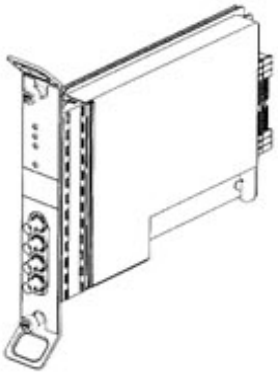

DESIGN NUMBER	253695	
CLASS	06-01	
1)WIM PLAST LIMITED, A PUBLIC LIMITED COMPANY REGISTERED UNDER THE PROVISION OF INDIAN COMPANIES ACT, 1956, HAVING OFFICE ADDRESS AT 5 CORPORATE AVENUE, 'B' WING, CELLO HOUSE, SONAWALA ROAD, GOREGAON (EAST), MUMBAI-400063, MAHARASHTRA, INDIA		
DATE OF REGISTRATION	06/05/2013	
TITLE	STOOL	
PRIORITY NA		

DESIGN NUMBER	255341	
CLASS	09-03	
1)INSECTICIDES INDIA LIMITED A COMPANY INCORPORATED UNDER THE INDIAN COMPANIES ACT, 1956 INDIAN COMPANY 401-402, LUSA TOWER, AZADPUR COMMERCIAL COMPLEX, NEW DELHI-110 033		
DATE OF REGISTRATION	18/07/2013	
TITLE	CONTAINER	
PRIORITY NA		

DESIGN NUMBER	254396	
CLASS	23-01	
1)UNILEVER PLC, A COMPANY REGISTERED IN ENGLAND AND WALES UNDER COMPANY NO. 41424 OF UNILEVER HOUSE, 100 VICTORIA EMBANKMENT, LONDON, EC4Y 0DY, UNITED KINGDOM		
DATE OF REGISTRATION	07/06/2013	
TITLE	BIOCIDE CARTRIDGE FOR WATER PURIFIER	

PRIORITY

PRIORITY NUMBER	DATE	COUNTRY
002151373-0001	12/12/2012	OHIM

DESIGN NUMBER	254183
CLASS	15-06
1)MASCHINENFABRIK RIETER AG, A SWISS COMPANY OF KLOSTERSTRASSE 20, CH-8406 WINTERTHUR, SWITZERLAND	
DATE OF REGISTRATION	30/05/2013
TITLE	RETAINER FOR CLEANING ROLLER IN A TEXTILE SPINNING MACHINE

PRIORITY

PRIORITY NUMBER	DATE	COUNTRY
201230652681.1	12/12/2012	CHINA

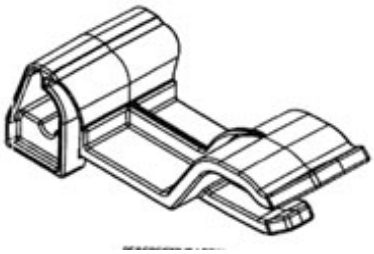

DESIGN NUMBER	254281
CLASS	12-16
1)RENAULT TRUCKS, A COMPANY ORGANIZED UNDER THE LAWS OF FRANCE, OF 99 ROUTE DE LYON, 69800 SAINT PRIEST, FRANCE	
DATE OF REGISTRATION	06/06/2013
TITLE	AIR-INTAKE GRILLE FOR VEHICLE
PRIORITY NA	

DESIGN NUMBER	255201
CLASS	09-03
1)ZEDEL (SOCIÉTÉ PAR ACTIONS SIMPLIFIÉE), A FRENCH COMPANY OF ZONE INDUSTRIELLE DE CROLLES, 38920 CROLLES, FRANCE (FR)	
DATE OF REGISTRATION	12/07/2013
TITLE	PACKAGING

PRIORITY

PRIORITY NUMBER	DATE	COUNTRY
002166173	14/01/2013	OHIM

DESIGN NUMBER	254354
CLASS	26-03
1)VAISH, HIMANGSHU RAI, AN INDIAN NATIONAL OF S-19 PANCHSHILA PARK, NEW DELHI 110017	
DATE OF REGISTRATION	06/06/2013
TITLE	STREET LIGHT FIXTURE
PRIORITY NA	

DESIGN NUMBER	254011
CLASS	02-04
1)RAJ KUMAR GROVER, SOLE PROPRIETOR OF PHARMATECH DISTRIBUTORS WHOSE ADDRESS IS S-12, SHIVAJI PARK MARKET, PUNJABI BAGH, NEW DELHI-110026, INDIA, AN INDIAN NATIONAL OF ABOVE ADDRESS	
DATE OF REGISTRATION	21/05/2013
TITLE	TOE SPREADER WITH METATARSAL SUPPORT
PRIORITY NA	

DESIGN NUMBER	254180
CLASS	23-01
1)LUBRIZOL ADVANCED MATERIALS, INC, A DELAWARE CORPORATION OF 9919 BRECKSVILLE ROAD, CLEVELAND, OHIO 44141-3247, U.S.A.	
DATE OF REGISTRATION	30/05/2013
TITLE	PIPE
PRIORITY NA	

DESIGN NUMBER	255690	
CLASS	12-11	
1)HERO CYCLES LIMITED, HERO NAGAR, G. T. ROAD, LUDHIANA-141003 (PUNJAB), INDIA, (AN INDIAN COMPANY DULY INCORPORATED UNDER THE PROVISIONS OF INDIAN COMPANIES ACT, 1956)		
DATE OF REGISTRATION	06/08/2013	
TITLE	BICYCLE	
PRIORITY NA		
DESIGN NUMBER	255811	
CLASS	07-02	
1)MRS. SIMPLE (PROPRIETOR), NATIONALITY INDIAN TRADING AS TULIP INDUSTRIES (THIS IS A PROPRIETORSHIP FIRM) WHOES ADDRESS IS C-130, SECTOR-3, BAWANA INDUSTRIAL AREA, DELHI-110039 (INDIA)		
DATE OF REGISTRATION	14/08/2013	
TITLE	BOWL	
PRIORITY NA		
DESIGN NUMBER	256298	
CLASS	02-04	
1)LIBERTY SHOES LIMITED, AN INDIAN COMPANY, OF LIBERTY PURAM, 13, MILESTONE, GT KARNAL ROAD, KUTAIL, DT-KARNAL - 132001, HARYANA, INDIA		
DATE OF REGISTRATION	06/09/2013	
TITLE	SOLE FOR FOOTWEAR	
PRIORITY NA		

DESIGN NUMBER	253939
CLASS	13-03
1)SMA SOLAR TECHNOLOGY AG, A GERMAN COMPANY OF SONNENALLEE 1, 34266 NIESTETAL, GERMANY	
DATE OF REGISTRATION	17/05/2013
TITLE	SWITCHING HUB
PRIORITY	

PRIORITY NUMBER	DATE	COUNTRY
002140855	22/11/2012	OHIM

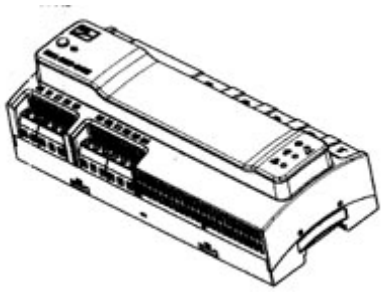

DESIGN NUMBER	254179
CLASS	23-01
1)LUBRIZOL ADVANCED MATERIALS, INC, A DELAWARE CORPORATION OF 9919 BRECKSVILLE ROAD, CLEVELAND, OHIO 44141-3247, U.S.A.	
DATE OF REGISTRATION	30/05/2013
TITLE	PIPE
PRIORITY NA	

DESIGN NUMBER	256297
CLASS	02-04
1)LIBERTY SHOES LIMITED, AN INDIAN COMPANY, OF LIBERTY PURAM, 13, MILESTONE, GT KARNAL ROAD, KUTAIL, DT-KARNAL - 132001, HARYANA, INDIA	
DATE OF REGISTRATION	06/09/2013
TITLE	SOLE FOR FOOTWEAR
PRIORITY NA	

DESIGN NUMBER	254408
CLASS	14-03
1)BEATS ELECTRONICS, LLC, 1601 CLOVERFIELD BLVD, SUITE 5000N, SANTA MONICA, CA 90404, U.S.A.	
DATE OF REGISTRATION	10/06/2013
TITLE	TRANSMITTER BOX

PRIORITY

PRIORITY NUMBER	DATE	COUNTRY
29/439,367	10/12/2012	U.S.A.

DESIGN NUMBER	253938
CLASS	13-03
1)SMA SOLAR TECHNOLOGY AG, A GERMAN COMPANY OF SONNENALLEE 1, 34266 NIESTETAL, GERMANY	
DATE OF REGISTRATION	17/05/2013
TITLE	SWITCHING HUB

PRIORITY

PRIORITY NUMBER	DATE	COUNTRY
002140855	22/11/2012	OHIM

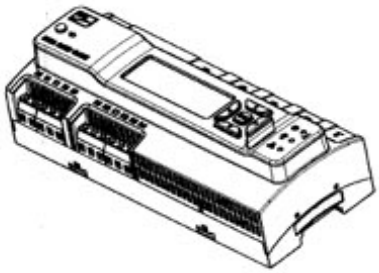

DESIGN NUMBER	250277
CLASS	23-04
1)KHAITAN (INDIA) LIMITED, AN INDIAN COMPANY HAVING ITS REGISTERED OFFICE AT 46C, JAWAHAR LAL NEHRU ROAD, KOLKATA 700071, WEST BENGAL, INDIA	
DATE OF REGISTRATION	18/12/2012
TITLE	AIR COOLER

PRIORITY NA

DESIGN NUMBER	255850
CLASS	02-04
1)THAIKATTIL JOSE, THAIKATTIL HOUSE, OLLUKARA P.O., THRISSUR, KERALA STATE, 680655, INDIA, AN INDIAN NATIONAL	
DATE OF REGISTRATION	16/08/2013
TITLE	FOOTWEAR
PRIORITY NA	

DESIGN NUMBER	256463
CLASS	07-99
1)MA DESIGN INDIA PRIVATE LIMITED, A COMPANY INCORPORATED IN INDIA HAVING ITS PRINCIPAL PLACE OF BUSINESS AT A-41, SECTOR-80, PHASE-II, NOIDA-201305, U.P. INDIA	
DATE OF REGISTRATION	16/09/2013
TITLE	TRAY
PRIORITY NA	

DESIGN NUMBER	256793
CLASS	12-16
1)HONDA MOTOR CO., LTD., A JAPANESE CORPORATION, OF 1-1, MINAMI-AOYAMA 2-CHOME, MINATO-KU, TOKYO, 107-8556 JAPAN	
DATE OF REGISTRATION	26/09/2013
TITLE	FRONT BUMPER FOR AUTOMOBILE

PRIORITY

PRIORITY NUMBER	DATE	COUNTRY
2013-007894	09/04/2013	JAPAN

DESIGN NUMBER	250844
CLASS	22-04
1)ZEN TECHNOLOGIES LIMITED, WHOSE ADDRESS IS B-42, INDUSTRIAL ESTATE, SANATHNAGAR, HYDERABAD-500018, ANDHRA PRADESH AND WHOSE NATIONALITY IS INDIA	
DATE OF REGISTRATION	07/01/2013
TITLE	FIREARM TARGET SUPPORT SYSTEM
PRIORITY NA	

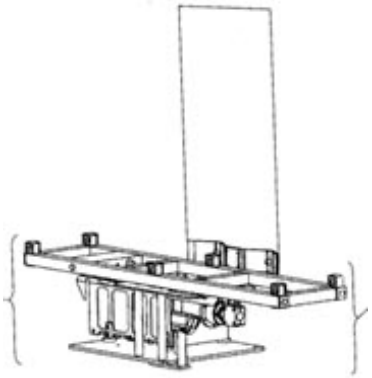

DESIGN NUMBER	253899
CLASS	09-03
1)JK FILES (INDIA) LIMITED, A COMPANY INCORPORATED UNDER THE INDIAN COMPANIES ACT, AT NEW HIND HOUSE, NAROTTAM MORARJEE MARG, BALLARD ESTATE, MUMBAI-400001, MAHARASHTRA, INDIA	
DATE OF REGISTRATION	16/05/2013
TITLE	PACKAGING BOX
PRIORITY NA	

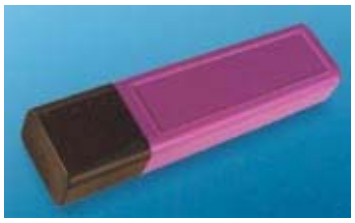

DESIGN NUMBER	252752
CLASS	23-02
1)KOHLER CO., A COMPANY ORGANIZED AND EXISTING UNDER THE LAW OF USA, OF 444 HIGHLAND DRIVE, KOHLER, WISCONSIN 53044, UNITED STATES OF AMERICA	
DATE OF REGISTRATION	02/04/2013
TITLE	FLUSH HANDLE

PRIORITY

PRIORITY NUMBER	DATE	COUNTRY
29/433,633	02/10/2012	U.S.A.

DESIGN NUMBER	254101	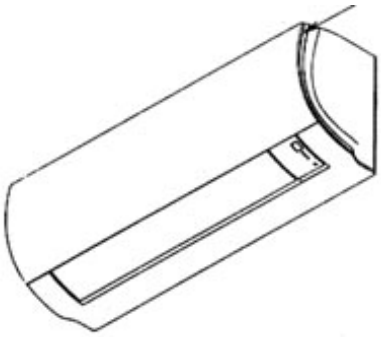
CLASS	23-04	
1)DAIKIN INDUSTRIES LTD. A JAPANESE COMPANY OF THE ADDRESS: UMEDA CENTER BUILDING, 4-12 NAKAZAKI-NISHI 2-CHOME, KITA-KU, OSAKA-SHI, OSAKA-FU, JAPAN		
DATE OF REGISTRATION	27/05/2013	
TITLE	AIR CONDITIONER	
PRIORITY NA		

DESIGN NUMBER	255926	
CLASS	08-06	
1)VINODBHAI RANCHHODBHAI PATEL, NATIONALITY INDIAN, TRADING AS OM SHANTI CORPORATION A SOLE PROPRIETORSHIP FIRM, ADDRESS AT ‘‘DIVYA KUNJ’’, SHREE MEGHANINAGAR SOCIETY STREET NO. 5, KOTYHARIYA MAIN ROAD, B/H. MANAV DHARMA ASHRAM, RAJKOT: 360002, GUJARAT, INDIA		
DATE OF REGISTRATION	21/08/2013	
TITLE	CABINET HANDLE	
PRIORITY NA		

DESIGN NUMBER	254984	
CLASS	04-01	
1)JOSHI PLASTIC INDUSTRIES (A PARTNERSHIP FIRM REGISTERED UNDER INDIAN PARTNERSHIP ACT, 1932), AT JOSHI BUILDING, SAKI - VIHAR ROAD, POWAI, MUMBAI - 400072 MAHARASHTRA, INDIA. WHOSE PARTNERS ARE (1) DEEPAK JOSHI (INDIAN NATIONAL), (2) PAVAN JOSHI (INDIAN NATIONAL), (3) MRS. SHOBA JOSHI INDIAN NATIONAL) & (4) B. D. JOSHI HUF (A HINDU UNDIVIDED FIRM) ALL ARE HAVING ABOVE ADDRESS		
DATE OF REGISTRATION	04/07/2013	
TITLE	BRUSHES FOR CLEANING	
PRIORITY NA		

DESIGN NUMBER	246956
CLASS	31-00
1)SODASTREAM INDUSTRIES LTD; AN ISRAELI CORPORATION, OF P.O. BOX 280, AIR PORT CITY 70100, ISRAEL	
DATE OF REGISTRATION	06/08/2012
TITLE	DOMESTIC SODA-WATER PREPARING DEVICE

PRIORITY

PRIORITY NUMBER	DATE	COUNTRY
001995085-0001	20/02/2012	OHIM

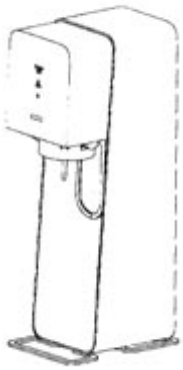

DESIGN NUMBER	255203
CLASS	26-02
1)ZEDEL (SOCIÉTÉ PAR ACTIONS SIMPLIFIÉE), A FRENCH COMPANY OF ZONE INDUSTRIELLE DE CROLLES, 38920 CROLLES, FRANCE (FR)	
DATE OF REGISTRATION	12/07/2013
TITLE	HEADLAMP

PRIORITY

PRIORITY NUMBER	DATE	COUNTRY
002166132	14/01/2013	OHIM

DESIGN NUMBER	254362
CLASS	12-16
1)FORD MOTOR COMPANY A COMPANY ORGANIZED AND EXISTING UNDER THE LAWS OF UNITED STATES OF AMERICA, HAVING ITS OFFICE AT DEARBORN, COUNTY OF WAYNE, STATE OF MICHIGAN, UNITED STATES OF AMERICA, AND FORD OTOMOTIV SANAYI ANONIM SIRKETI A COMPANY ORGANIZED AND EXISTING UNDER THE LAWS OF REPUBLIC OF TURKEY, HAVING ITS OFFICE AT AKPINAR MAHALLESI, HASAN BASRI CADDESI NO. 2, SANCAKTEPE, ISTANBUL, TURKEY	
DATE OF REGISTRATION	06/06/2013
TITLE	VEHICLE STEP COVER

PRIORITY

PRIORITY NUMBER	DATE	COUNTRY
29/443,888	23/01/2013	U.S.A.

DESIGN NUMBER	254438
CLASS	09-07
1)RIE MAKITA, 1300-3, OAZA WADA, MATSUMOTO-SHI, NAGANO-KEN, JAPAN, NATIONALITY: JAPAN	
DATE OF REGISTRATION	11/06/2013
TITLE	CAP OF A CONTAINER FOR A PACKAGE
PRIORITY NA	

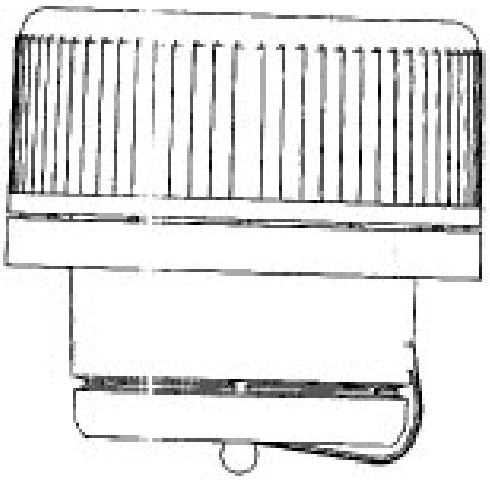

DESIGN NUMBER	254014
CLASS	09-03
1)MANJUSHREE TECHNOPACK LIMITED, OF 143, C-5, BOMMASANDRA INDUSTRIAL AREA, HOSUR ROAD, BANGALORE-560099, KARNATAKA, INDIA, AN INDIAN COMPANY	
DATE OF REGISTRATION	21/05/2013
TITLE	JAR
PRIORITY NA	

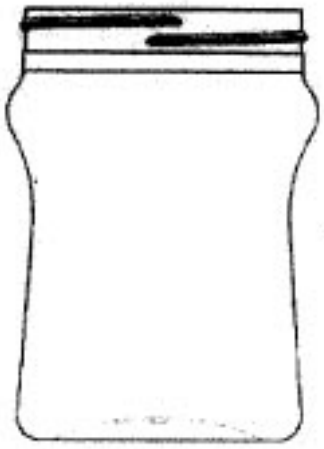

DESIGN NUMBER	254578
CLASS	12-08
1)HONDA MOTOR CO., LTD., A JAPANESE CORPORATION, OF 1-1, MINAMI-AOYAMA 2-CHOME, MINATO-KU, TOKYO, JAPAN	
DATE OF REGISTRATION	19/06/2013
TITLE	CAR

PRIORITY

PRIORITY NUMBER	DATE	COUNTRY
2012-32034	28/12/2012	JAPAN

DESIGN NUMBER	254116	
CLASS	15-99	
1)M/S MEGHA STEEL INDUSTRIES, FOCAL POINT EXTN, NEAR PHASE-VII, DHANDARI KHURD, LUDHIANA-141010 (PUNJAB) INDIA AN INDIAN PROPRIETORSHIP FIRM WHOSE PROPRIETOR IS :- KULDIP SINGLA BEING INDIAN NATIONALS OF THE ABOVE ADDRESS		
DATE OF REGISTRATION	28/05/2013	
TITLE	BUTTON MAKING MACHINE	
PRIORITY NA		

DESIGN NUMBER	256476	
CLASS	07-01	
1)MA DESIGN INDIA PRIVATE LIMITED, A COMPANY INCORPORATED IN INDIA HAVING ITS PRINCIPAL PLACE OF BUSINESS AT A-41, SECTOR-80, PHASE-II, NOIDA-201305, U.P. INDIA		
DATE OF REGISTRATION	16/09/2013	
TITLE	DISH	
PRIORITY NA		

DESIGN NUMBER	251759	
CLASS	09-01	
1)LRC PRODUCTS LTD, 103-105 BATH ROAD, SLOUGH, BERKSHIRE SL1 3UH, UNITED KINGDOM		
DATE OF REGISTRATION	19/02/2013	
TITLE	BOTTLE	

PRIORITY

PRIORITY NUMBER	DATE	COUNTRY
002089797	20/08/2012	OHIM

DESIGN NUMBER	256701
CLASS	12-16
1)HONDA MOTOR CO., LTD., A JAPANESE CORPORATION, OF 1-1, MINAMI-AOYAMA 2-CHOME, MINATO-KU, TOKYO, 107-8556, JAPAN	
DATE OF REGISTRATION	24/09/2013
TITLE	SIDE COVER FOR MOTORCYCLE

PRIORITY

PRIORITY NUMBER	DATE	COUNTRY
2013-006816	27/03/2013	JAPAN

DESIGN NUMBER	249487
CLASS	05-06
1)DSM IP ASSETS B.V, A COMPANY ORGANIZED AND EXISTING UNDER THE LAWS OF NETHERLANDS, HAVING ITS OFFICE AT HET OVERLOON 1, 6411 TE HEERLEN, NETHERLANDS	
DATE OF REGISTRATION	15/11/2012
TITLE	SHEET FOR ANTIBALLISTIC ARTICLES

PRIORITY NA

DESIGN NUMBER	243107
CLASS	11-01
1)BULGARI S.P.A. LUNGOTEVERE MARZIO, 11, 1-00186 ROME, ITALY	
DATE OF REGISTRATION	15/02/2012
TITLE	NECKLACE

PRIORITY

PRIORITY NUMBER	DATE	COUNTRY
DM/076683	31/08/2011	DENMARK

DESIGN NUMBER	253956	
CLASS	12-16	
1)STANDARD CORPORATION INDIA LIMITED, OF STANDARD CHOWK, BARNALA, PUNJUB, INDIA, A COMPANY INCORPORATED UNDER THE COMPANIES ACT, 1956, OF THE ABOVE ADDRESS		
DATE OF REGISTRATION	17/05/2013	
TITLE	BONNET OF TRACTOR	
PRIORITY NA		
DESIGN NUMBER	255450	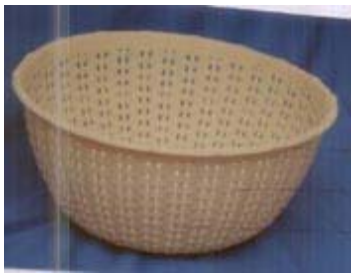
CLASS	07-04	
1)SUROOR PLASTICS., (AN INDIAN SOLE PROPRIETORHSIP CONCERN), HAVING OFFICE AT V/628B, CHELAPILLY ROAD, MANJAPETTY, MARRAMPILLY P.O. ALUVA, ERNAKULAM DIST, KERALA WHOSE PROPRIETOR IS THENOOR MOOSA HASSAINAR. (INDIAN NATIONAL) OF ABOVE ADDRESS		
DATE OF REGISTRATION	26/07/2013	
TITLE	BASKET	
PRIORITY NA		
DESIGN NUMBER	256047	
CLASS	09-03	
1)CHAPPIN & NELSON HOMOEOPATHS, AM-2, DILKHUSH INDUSTRIAL ESTATE, G. T. KARNAL ROAD, DELHI-110033, INDIA. (AN INDIAN PROPRIETORSHIP FIRM WHOSE PROPRIETOR IS :- SH. GURMEET SINGH DHINGRA. AN INDIAN NATIONAL OF THE ABOVE ADDRESS		
DATE OF REGISTRATION	26/08/2013	
TITLE	BOX	
PRIORITY NA		

DESIGN NUMBER	255061
CLASS	26-06

1)HONDA MOTOR CO., LTD., A CORPORATION OF JAPAN
OF 1-1, MINAMI-AOYAMA 2-CHOME, MINATO-KU, TOKYO, 107-8556 JAPAN

DATE OF REGISTRATION	08/07/2013
TITLE	HEADLIGHT FOR MOTOR SCOOTERS

PRIORITY

PRIORITY NUMBER	DATE	COUNTRY
2013-000164	09/01/2013	JAPAN

DESIGN NUMBER	256628
CLASS	23-01

1)UNILEVER PLC, A COMPANY REGISTERED IN ENGLAND AND WALES UNDER COMPANY NO. 41424 OF
UNILEVER HOUSE, 100 VICTORIA EMBANKMENT, LONDON, EC4Y 0DY, UNITED KINGDOM

DATE OF REGISTRATION	19/09/2013
TITLE	WATER PURIFICATION DEVICE

PRIORITY

PRIORITY NUMBER	DATE	COUNTRY
002205534-0001	20/03/2013	OHIM

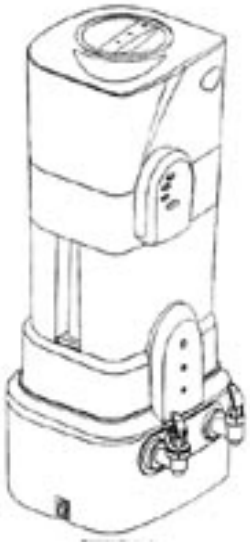

DESIGN NUMBER	252622
CLASS	03-01

1)CHRISTIAN DIOR COUTURE, A FRENCH PUBLIC LIMITED COMPANY OF
30 AVENUE MONTAIGNE, 75008 PARIS, FRANCE

DATE OF REGISTRATION	22/03/2013
TITLE	HAND BAG

PRIORITY

PRIORITY NUMBER	DATE	COUNTRY
DM/079672	23/11/2012	WIPO

DESIGN NUMBER	253794
CLASS	28-03
1)OSIM INTERNATIONAL LIMITED, A COMPANY EXISTING UNDER THE LAWS OF SINGAPORE, AT 65 UBI AVENUE 1, OSIM HEADQUARTERS, SINGAPORE-408939	
DATE OF REGISTRATION	13/05/2013
TITLE	MASSAGE CHAIR

PRIORITY

PRIORITY NUMBER	DATE	COUNTRY
D2012/1305/Z	16/11/2012	SINGAPORE

DESIGN NUMBER	255134
CLASS	21-01
1)VOLVO TRUCK CORPORATION, OF 40508 GOTEBORG, SWEDEN	
DATE OF REGISTRATION	11/07/2013
TITLE	TOY TRUCK

PRIORITY

PRIORITY NUMBER	DATE	COUNTRY
002179234-0001	06/02/2013	OHIM

DESIGN NUMBER	249488
CLASS	05-06
1)DSM IP ASSETS B.V, A COMPANY ORGANIZED AND EXISTING UNDER THE LAWS OF NETHERLANDS, HAVING ITS OFFICE AT HET OVERLOON 1, 6411 TE HEERLEN, NETHERLANDS	
DATE OF REGISTRATION	15/11/2012
TITLE	SHEET FOR ANTIBALLISTIC ARTICLES

PRIORITY NA

DESIGN NUMBER	254300
CLASS	12-16
1)RENAULT TRUCKS, A COMPANY ORGANIZED UNDER THE LAWS OF FRANCE, OF 99 ROUTE DE LYON, 69800 SAINT PRIEST, FRANCE	
DATE OF REGISTRATION	06/06/2013
TITLE	FRAME COMPONENT FOR VEHICLE HEADLIGHT
PRIORITY NA	

DESIGN NUMBER	253960
CLASS	09-01
1)PEARL POLYMERS LIMITED, 204, ROHIT HOUSE, 3, TOLSTOY MARG, NEW DELHI-110001, INDIA, A COMPANY INCORPORATED UNDER THE COMPANIES ACT, 1956, OF THE ABOVE ADDRESS	
DATE OF REGISTRATION	17/05/2013
TITLE	BOTTLE
PRIORITY NA	

DESIGN NUMBER	250595
CLASS	15-09
1)KITAMURA MACHINERY CO., LTD. OF 1870, TOIDE-KOMYOJI, TAKAOKA-SHI, TOYAMA, JAPAN, A JAPANESE COMPANY	
DATE OF REGISTRATION	02/01/2013
TITLE	LATHE MACHINE

PRIORITY

PRIORITY NUMBER	DATE	COUNTRY
2012-015956	05/07/2012	JAPAN

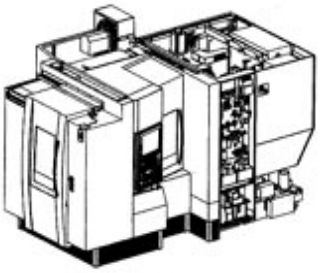

DESIGN NUMBER	254243
CLASS	25-02
1)ALUDECOR LAMINATION PRIVATE LIMITED, OF 1, R. N. MUKHERJEE ROAD, SUITE NO. 52, 5TH FLOOR, MARTIN BURN BUILDING, KOLKATA-700001, AN INDIAN PRIVATE LIMITED COMPANY	
DATE OF REGISTRATION	03/06/2013
TITLE	COMPOSITE PANEL
PRIORITY NA	

DESIGN NUMBER	249710
CLASS	15-06
1)SSM SCHÄRER SCHWEITER METTLER AG, OF NEUGASSE 10, 8812 HORGEN, SWITZERLAND	
DATE OF REGISTRATION	26/11/2012
TITLE	WAXER AND PARAFFINING APPARATUS

PRIORITY

PRIORITY NUMBER	DATE	COUNTRY
002055715	11/06/2012	OHIM

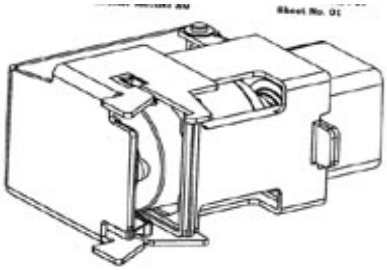

DESIGN NUMBER	253673
CLASS	12-16
1)SONA KOYO STEERING SYSTEMS LTD., AN INDIAN COMPANY, OF 38/6 DELHI-JAIPUR ROAD, NH-8, GURGAON-122001, HARYANA, INDIA	
DATE OF REGISTRATION	03/05/2013
TITLE	STOPPER FOR POWER STEERING OF A VEHICLE
PRIORITY NA	

DESIGN NUMBER	254380
CLASS	25-02
1)M/S. DIAMOND FRAMES PRIVATE LIMITED, A COMPANY INCORPORATED UNDER INDIAN COMPANIES ACT, 1956, HAVING PLACE OF BUSINESS AT #4, CORPORATION SHOPPING COMPLEX, PROJECT-II, BREWERY ROAD, SHENOY NAGAR, CHENNAI-600030, INDIA	
DATE OF REGISTRATION	06/06/2013
TITLE	PARTITION SYSTEM
PRIORITY NA	

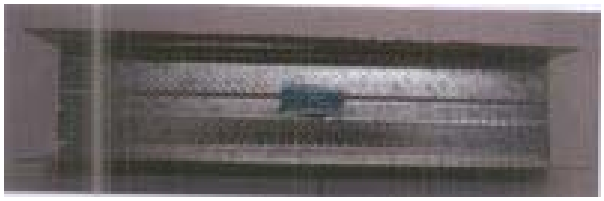

DESIGN NUMBER	237635
CLASS	28-02
1)MS MARIE C.GELIN AT 9002 CEDAR GROVE RD., FAIRBURN, (GEORGIA) GA 30213, UNITED STATES OF AMERICA.	
DATE OF REGISTRATION	29/06/2011
TITLE	SOAP
PRIORITY NA	

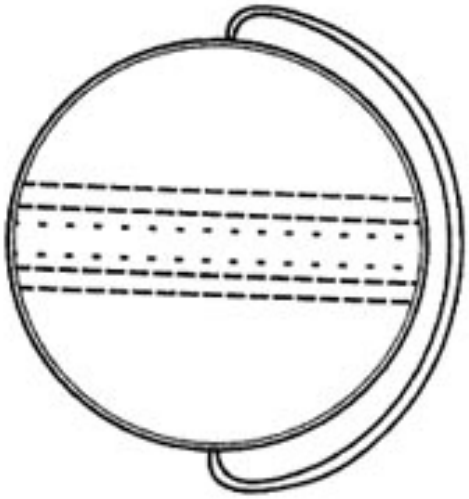

DESIGN NUMBER	255062
CLASS	26-06
1)HONDA MOTOR CO., LTD., A CORPORATION OF JAPAN OF 1-1, MINAMI-AOYAMA 2-CHOME, MINATO-KU, TOKYO, 107-8556 JAPAN	
DATE OF REGISTRATION	08/07/2013
TITLE	REAR COMBINATION LAMP FOR MOTOR SCOOTERS

PRIORITY

PRIORITY NUMBER	DATE	COUNTRY
2013-000165	09/01/2013	JAPAN

DESIGN NUMBER	256629
CLASS	23-01
1)UNILEVER PLC, A COMPANY REGISTERED IN ENGLAND AND WALES UNDER COMPANY NO. 41424 OF UNILEVER HOUSE, 100 VICTORIA EMBANKMENT, LONDON, EC4Y 0DY, UNITED KINGDOM	
DATE OF REGISTRATION	19/09/2013
TITLE	WATER PURIFICATION DEVICE

PRIORITY

PRIORITY NUMBER	DATE	COUNTRY
002205500-0001	20/03/2013	OHIM

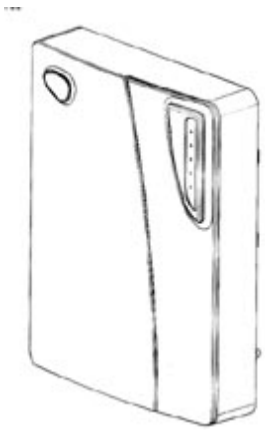

DESIGN NUMBER	252629
CLASS	24-04
1)SAMINA RYAZ SHAMJI, AN INDIAN NATIONAL, HAVING ADDRESS: 2F-G2, MODELS MERIDIEN, NIO DONAPAULA, CARANZALEM, GOA, 403004	
DATE OF REGISTRATION	25/03/2013
TITLE	DISPOSABLE PANTY SHAPED SANITARY PAD
PRIORITY NA	

DESIGN NUMBER	249489
CLASS	05-06
1)DSM IP ASSETS B.V, A COMPANY ORGANIZED AND EXISTING UNDER THE LAWS OF NETHERLANDS, HAVING ITS OFFICE AT HET OVERLOON 1, 6411 TE HEERLEN, NETHERLANDS	
DATE OF REGISTRATION	15/11/2012
TITLE	SHEET FOR ANTIBALLISTIC ARTICLES
PRIORITY NA	

DESIGN NUMBER	249986
CLASS	06-01
1)HAWORTH, INC., ONE HAWORTH CENTER, HOLLAND, MICHIGAN 49423, UNITED STATES OF AMERICA, A MICHIGAN CORPORATION	
DATE OF REGISTRATION	06/12/2012
TITLE	OFFICE CHAIR

PRIORITY

PRIORITY NUMBER	DATE	COUNTRY
29/424,233	08/06/2012	U.S.A.

DESIGN NUMBER	253572
CLASS	26-06
1)BEIFANG HELLA AUTOMOTIVE LIGHTING LTD., A COMPANY ORGANIZED UNDER THE LAWS OF CHINA, OF NO. 6 SHENWEI NORTH ROAD, YANJIAO JINGGONG, INDUSTRIAL PARK, YANJIAO ECONOMIC AND TECHNOLOGICAL DEVELOPMENT ZONE, SANHE, HEBEI PROVINCE, CHINA	
DATE OF REGISTRATION	30/04/2013
TITLE	TAILLAMP FOR VEHICLE

PRIORITY

PRIORITY NUMBER	DATE	COUNTRY
2013301078438	11/04/2013	CHINA

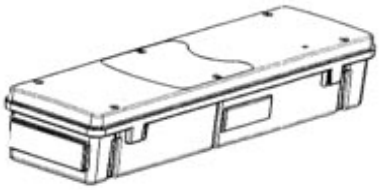

DESIGN NUMBER	253962
CLASS	09-01
1)PEARL POLYMERS LIMITED, OF 204, ROHIT HOUSE, 3, TOLSTOY MARG, NEW DELHI-110001, INDIA, A COMPANY INCORPORATED UNDER THE COMPANIES ACT, 1956, OF THE ABOVE ADDRESS	
DATE OF REGISTRATION	17/05/2013
TITLE	BOTTLE

PRIORITY NA

DESIGN NUMBER	254607	
CLASS	12-02	
1)HEGDE AGRO IMPEX PRIVATE LIMITED, AN INDIAN PRIVATE LIMITED COMPANY REGISTERED UNDER COMPANIES ACT 1956, HAVING ITS REGISTERED OFFICE & WORKS AT 2ND K. M., B. K. ROAD, SAGARA (T), SHIMOGA (D), KARNATAKA (ST.), INDIA		
DATE OF REGISTRATION	20/06/2013	
TITLE	BARROW	
PRIORITY NA		
DESIGN NUMBER	254223	
CLASS	02-04	
1)DELHI PLASTIC T-1/118, MANGOLPURI INDUSTRIAL AREA, PHASE-1, DELHI-110083, INDIA (AN INDIAN PROPRIETORSHIP FIRM WHOSE PROPRIETOR IS:- SH. ANIL BANSAL AN INDIAN NATIONAL OF THE ABOVE ADDRESS		
DATE OF REGISTRATION	31/05/2013	
TITLE	SHOE	
PRIORITY NA		
DESIGN NUMBER	252296	
CLASS	26-05	
1)SUCHIR LIGHTINGS EXPORTS PRIVATE LIMITED, A COMPANY HAVING ITS PRINCIPAL PLACE OF BUSINESS AT C-98, HOSIERY COMPLEX, PHASE-II EXTN., NOIDA-201305, U.P. INDIA BY NATIONALITY INDIA		
DATE OF REGISTRATION	13/03/2013	
TITLE	LAMP SHADE	
PRIORITY NA		

DESIGN NUMBER	256457
CLASS	07-06

1)MA DESIGN INDIA PRIVATE LIMITED, A COMPANY INCORPORATED IN INDIA HAVING ITS PRINCIPAL PLACE OF BUSINESS AT
A-41, SECTOR-80, PHASE-II, NOIDA-201305, U.P. INDIA

DATE OF REGISTRATION	16/09/2013
TITLE	STAND (FOR CAKES, PASTRIES)

PRIORITY NA

DESIGN NUMBER	251894
CLASS	21-01

1)[1] TOSY ROBOTICS JOINT STOCK COMPANY; A COMPANY INCORPORATED UNDER THE LAWS OF VIETNAM; ADDRESS AT, NO. 7, LANE 538, LANG ROAD, LANG HA PRECINCT, DONG DA DISTRICT, HANOI, VIETNAM AND [2] HO VINH HOANG AN INDIVIDUAL VIETNAM NATIONAL;
ADDRESS AT, NO. 7, LANE 538, LANG ROAD, LANG HA PRECINCT, DONG DA DISTRICT, HANOI, VIETNAM

DATE OF REGISTRATION	27/02/2013
TITLE	ROBOT TOY

PRIORITY

PRIORITY NUMBER	DATE	COUNTRY
29/430,657	28/08/2012	U.S.A.

DESIGN NUMBER	254379
CLASS	25-02

1)M/S. DIAMOND FRAMES PRIVATE LIMITED, A COMPANY INCORPORATED UNDER INDIAN COMPANIES ACT, 1956, HAVING PLACE OF BUSINESS AT
#4, CORPORATION SHOPPING COMPLEX, PROJECT-II, BREWERY ROAD, SHENOY NAGAR, CHENNAI-600030, INDIA

DATE OF REGISTRATION	06/06/2013
TITLE	FRAME FOR CEILING SYSTEM

PRIORITY NA

DESIGN NUMBER	245030
CLASS	24-02
1)OCCLUTECH HOLDING AG VORDERGASSE 3, CH-8201 SCHAFFHAUSEN, SWITZERLAND	
DATE OF REGISTRATION	30/04/2012
TITLE	OCCLUSAL APPLIANCES
PRIORITY	

PRIORITY NUMBER	DATE	COUNTRY
001940610-0005	31/10/2011	OHIM

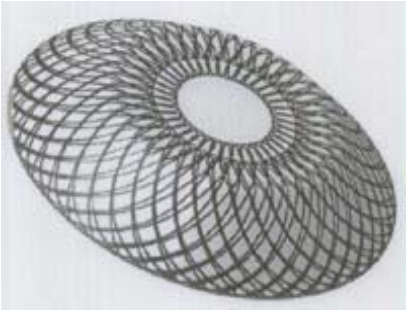

DESIGN NUMBER	254127
CLASS	12-16
1)BHARUCHA PERVEZ NARIMAN, AN INDIAN NATIONAL OF 703/A, ASTER, EVERSHINE PARK, PRATHMESH COMPLEX, VEERA DESAI ROAD, ANDHERI (W), MUMBAI, MAHARASHTRA, INDIA	
DATE OF REGISTRATION	28/05/2013
TITLE	CENTRE STAND FOR TWO WHEELED VEHICLE
PRIORITY NA	

DESIGN NUMBER	256456
CLASS	07-06
1)MA DESIGN INDIA PRIVATE LIMITED, A COMPANY INCORPORATED IN INDIA HAVING ITS PRINCIPAL PLACE OF BUSINESS AT A-41, SECTOR-80, PHASE-II, NOIDA-201305, U.P. INDIA	
DATE OF REGISTRATION	16/09/2013
TITLE	SALT CELLAR
PRIORITY NA	

DESIGN NUMBER	254378
CLASS	25-02
1)M/S. DIAMOND FRAMES PRIVATE LIMITED, A COMPANY INCORPORATED UNDER INDIAN COMPANIES ACT, 1956, HAVING PLACE OF BUSINESS AT #4, CORPORATION SHOPPING COMPLEX, PROJECT-II, BREWERY ROAD, SHENOY NAGAR, CHENNAI-600030, INDIA	
DATE OF REGISTRATION	06/06/2013
TITLE	FRAME FOR CEILING SYSTEM
PRIORITY NA	

DESIGN NUMBER	245028
CLASS	24-02
1)OCCLUTECH HOLDING AG VORDERGASSE 3, CH-8201 SCHAFFHAUSEN, SWITZERLAND	
DATE OF REGISTRATION	30/04/2012
TITLE	OCCLUSAL APPLIANCES
PRIORITY	

PRIORITY NUMBER	DATE	COUNTRY
001940610-0003	31/10/2011	OHIM

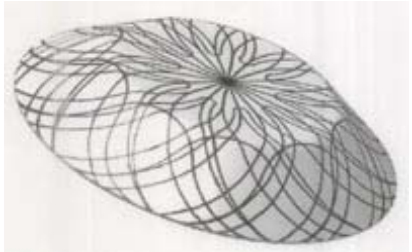

DESIGN NUMBER	254102
CLASS	23-04
1)DAIKIN INDUSTRIES LTD. A JAPANESE COMPANY OF THE ADDRESS: UMEDA CENTER BUILDING, 4-12 NAKAZAKI-NISHI 2-CHOME, KITA-KU, OSAKA-SHI, OSAKA-FU, JAPAN	
DATE OF REGISTRATION	27/05/2013
TITLE	AIR CONDITIONER
PRIORITY NA	

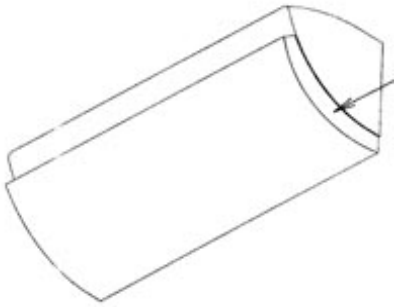

DESIGN NUMBER	255927	
CLASS	08-06	
1)VINODBHAI RANCHHODBHAI PATEL, NATIONALITY INDIAN, TRADING AS OM SHANTI CORPORATION A SOLE PROPRIETORSHIP FIRM, ADDRESS AT "DIVYA KUNJ , SHREE MEGHANINAGAR SOCIETY STREET NO. 5, KOTYHARIYA MAIN ROAD, B/H. MANAV DHARMA ASHRAM, RAJKOT: 360 002, GUJARAT, INDIA.		
DATE OF REGISTRATION	21/08/2013	
TITLE	CABINET HANDLE	
PRIORITY NA		

DESIGN NUMBER	254985	
CLASS	04-01	
1)JOSHI PLASTIC INDUSTRIES (A PARTNERSHIP FIRM REGISTERED UNDER INDIAN PARTNERSHIP ACT, 1932), AT JOSHI BUILDING, SAKI - VIHAR ROAD, POWAI, MUMBAI - 400072 MAHARASHTRA, INDIA. WHOSE PARTNERS ARE (1) DEEPAK JOSHI (INDIAN NATIONAL), (2) PAVAN JOSHI (INDIAN NATIONAL), (3) MRS. SHOBA JOSHI INDIAN NATIONAL) & (4) B. D. JOSHI HUF (A HINDU UNDIVIDED FIRM) ALL ARE HAVING ABOVE ADDRESS		
DATE OF REGISTRATION	04/07/2013	
TITLE	BRUSH FOR CLEANING	
PRIORITY NA		

DESIGN NUMBER	251451	
CLASS	09-05	
1)AVENTISUB II INC., A CORPORATION ORGANIZED UNDER THE LAWS OF THE STATES OF DELAWARE, OF 3711 KENNETT PIKE, SUITE 200 GREENVILLE, DELAWARE 19807, UNITED STATES		
DATE OF REGISTRATION	06/02/2013	
TITLE	PACKAGE WITH BLISTERS	
PRIORITY		

PRIORITY NUMBER	DATE	COUNTRY
29429016	06/08/2012	U.S.A.

DESIGN NUMBER	253730
CLASS	24-02
1)KARL STORZ GMBH & CO. KG, A GERMAN COMPANY OF MITTELSTRASSE 8, D-78532 TUTTLINGEN, GERMANY	
DATE OF REGISTRATION	06/05/2013
TITLE	SEALING ELEMENT FOR USE IN SINGLE PORT LAPAROSCOPIC SURGERY

PRIORITY

PRIORITY NUMBER	DATE	COUNTRY
002132084-0007	07/11/2012	OHIM

DESIGN NUMBER	255281
CLASS	09-01
1)PEARL POLYMERS LIMITED, OF 204, ROHIT HOUSE, 3, TOLSTOY MARG, NEW DELHI-110 001, INDIA, A COMPANY INCORPORATED UNDER THE COMPANIES ACT, 1956, OF THE ABOVE ADDRESS	
DATE OF REGISTRATION	17/07/2013
TITLE	JAR

PRIORITY NA

DESIGN NUMBER	250719
CLASS	08-06
1)SHAILAJA SUROJU, AN INDIAN NATIONAL, HAVING ADDRESS FLAT NO: 103, ASTER-4, SUKHWANI CAMPUS, VALLABHNAGAR, OPP: S. T. STAND, PIMPRI, PUNE-411018	
DATE OF REGISTRATION	04/01/2013
TITLE	FLANGED HINGE FOR FURNITURE,

PRIORITY NA

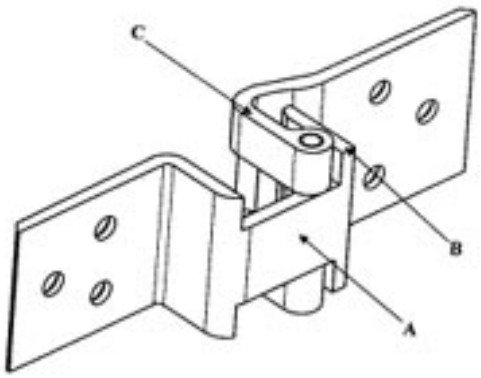

DESIGN NUMBER	254030
CLASS	24-01
1)KONINKLIJKE PHILIPS ELECTRONICS N.V., A COMPANY ORGANIZED AND EXISTING UNDER THE LAWS OF THE KINGDOM OF THE NETHERLANDS, RESIDING AT EINDHOVEN, WHOSE POST-OFFICE ADDRESS IS HIGH TECH CAMPUS 5, 5656 AE EINDHOVEN, THE NETHERLANDS	
DATE OF REGISTRATION	22/05/2013
TITLE	COMPUTERISED TOMOGRAPHY SCANNER

PRIORITY

PRIORITY NUMBER	DATE	COUNTRY
002140863-0001	22/11/2012	OHIM

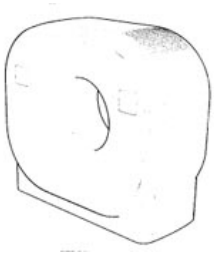

DESIGN NUMBER	254585
CLASS	11-01
1)OCTONUS DIA-TECH PRIVATE LTD. (A PRIVATE LIMITED COMPANY ORGANIZED AND EXISTING UNDER THE LAWS OF INDIA), HAVING ITS REGISTERED OFFICE AT: 25-28, 1ST FL., NAVRANG INDUSTR. ESTATE OPP. SOSYO FACTORY, UDHNA MAGDALLA RD., 395002 SURAT SAGRAMPURA, INDIA	
DATE OF REGISTRATION	19/06/2013
TITLE	GEMSTONE

PRIORITY

PRIORITY NUMBER	DATE	COUNTRY
002159301-0001	26/12/2012	OHIM

DESIGN NUMBER	252154
CLASS	13-02
1)COSTRUZIONI ELETTRONICHE INDUSTRIALI AUTOMATISMI S.P.A. C.E.I.A. S.P.A., A CORPORATION ORGANIZED UNDER THE LAWS OF ITALY, WHOSE ADDRESS IS CIVITELLA IN VAL DI CHIANA (AR), VIA STRADA PROVINCIALE PESCAIOLA, 54/G-56 CAP, I-52040 FRAZIONE VICIOMAGGIO, ITALY	
DATE OF REGISTRATION	06/03/2013
TITLE	APPARATUS FOR RECHARGING BATTERIES

PRIORITY

PRIORITY NUMBER	DATE	COUNTRY
001342588-0001	06/09/2012	OHIM

DESIGN NUMBER	251453
CLASS	09-05
1)AVENTISUB II INC., A CORPORATION ORGANIZED UNDER THE LAWS OF THE STATES OF DELAWARE, OF 3711 KENNETT PIKE, SUITE 200 GREENVILLE, DELAWARE 19807, UNITED STATES	
DATE OF REGISTRATION	06/02/2013
TITLE	BLISTER PACKAGE

PRIORITY

PRIORITY NUMBER	DATE	COUNTRY
29429017	06/08/2012	U.S.A.

DESIGN NUMBER	252928
CLASS	14-02
1)OMRON CORPORATION, A CORPORATION ORGANIZED AND EXISTING UNDER THE LAWS OF JAPAN, OF 801, MINAMIFUDODO-CHO, HORIKAWAHIGASHIIRU, SHIOKOJI-DORI, SHIMOGYO-KU, KYOTO-SHI, KYOTO 600-8530, JAPAN	
DATE OF REGISTRATION	05/04/2013
TITLE	CONTROL UNIT FOR A PROGRAMMABLE CONTROLLER SYSTEM

PRIORITY

PRIORITY NUMBER	DATE	COUNTRY
2012-24673	10/10/2012	JAPAN

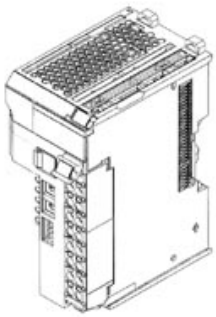

DESIGN NUMBER	251758
CLASS	09-01
1)LRC PRODUCTS LTD, 103-105 BATH ROAD, SLOUGH, BERKSHIRE SL1 3UH, UNITED KINGDOM	
DATE OF REGISTRATION	19/02/2013
TITLE	BOTTLE

PRIORITY

PRIORITY NUMBER	DATE	COUNTRY
002089797	20/08/2012	OHIM

DESIGN NUMBER	252191
CLASS	14-02
1)APPLE INC., 1 INFINITE LOOP, CUPERTINO, CALIFORNIA 95014, UNITED STATES OF AMERICA, A CORPORATION INCORPORATED IN THE STATE OF CALIFORNIA	
DATE OF REGISTRATION	07/03/2013
TITLE	ADAPTER FOR ELECTRONIC DEVICE
PRIORITY	

PRIORITY NUMBER	DATE	COUNTRY
29/431,841	11/09/2012	U.S.A.

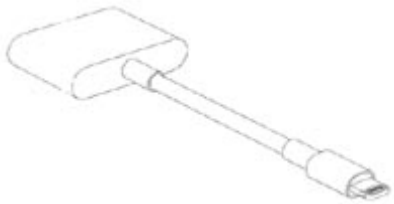

DESIGN NUMBER	256075
CLASS	09-01
1)M/S. AG POLY PACKS PVT. LTD. (A COMPANY INCORPORATED UNDER THE INDIAN COMPANIES ACT, 1956), C-4/1, RAJIV NAGAR INDL. AREA, SEWADHAM MARG, MANDOLI, DELHI-93	
DATE OF REGISTRATION	27/08/2013
TITLE	BOTTLE
PRIORITY NA	

DESIGN NUMBER	255235
CLASS	09-01
1)PRAMIT SANGHAVI AND DEWANG SANGHAVI, PARTNERS TRADING AS V2 CORP., A PARTNERSHIP FIRM, INDIAN, MANUFACTURERS AND MERCHANTS, WHOSE ADDRESS IS WZ-8/1, INDUSTRIAL AREA, KIRTI NAGAR, NEW DELHI-110015, INDIA	
DATE OF REGISTRATION	15/07/2013
TITLE	BOTTLE
PRIORITY NA	

DESIGN NUMBER	255068
CLASS	08-09
1)TTK PRESTIGE LIMITED, AN INDIAN COMPANY, INCORPORATED UNDER THE COMPANIES ACT 1956, HAVING ITS PRINCIPAL PLACE OF BUSINESS AT 11TH FLOOR, BRIGADE TOWERS, 135 BRIGADE ROAD, BANGALORE-560 025, STATE OF KARNATAKA, INDIA	
DATE OF REGISTRATION	08/07/2013
TITLE	FITTINGS FOR LOCK
PRIORITY NA	

DESIGN NUMBER	256455
CLASS	07-06
1)MA DESIGN INDIA PRIVATE LIMITED, A COMPANY INCORPORATED IN INDIA HAVING ITS PRINCIPAL PLACE OF BUSINESS AT A-41, SECTOR-80, PHASE-II, NOIDA-201305, U.P. INDIA	
DATE OF REGISTRATION	16/09/2013
TITLE	BOWL FOR SALT
PRIORITY NA	

DESIGN NUMBER	248649
CLASS	12-08
1)SML ISUZU LIMITED (FORMERLY SWARAJ MAZDA LIMITED), HAVING ITS REGISTERED OFFICE AT VILLAGE ASRON, DISTRICT NAWANSHAHAR-144533 (PUNJAB), INDIA, AN INDIAN COMPANY REGISTERED UNDER THE INDIAN COMPANIES ACT	
DATE OF REGISTRATION	16/10/2012
TITLE	BUS
PRIORITY NA	

DESIGN NUMBER	245027
CLASS	24-02
1)OCCLUTECH HOLDING AG VORDERGASSE 3, CH-8201 SCHAFFHAUSEN, SWITZERLAND	
DATE OF REGISTRATION	30/04/2012
TITLE	OCCLUSAL APPLIANCES

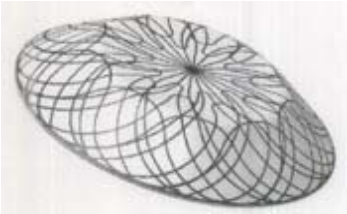

PRIORITY

PRIORITY NUMBER	DATE	COUNTRY
001940610-0001	31/10/2011	OHIM