पेटेंट कार्यालय
का
शासकीय जर्नल

OFFICIAL JOURNAL
OF
THE PATENT OFFICE

निर्गमन सं. **11/2014**	शुक्रवार	दिनांक: 14/03/2014
ISSUE NO. 11/2014	**FRIDAY**	**DATE:** 14/03/2014

पेटेंट कार्यालय का एक प्रकाशन
PUBLICATION OF THE PATENT OFFICE

INTRODUCTION

In view of the recent amendment made in the Patents Act, 1970 by the Patents (Amendment) Act, 2005 effective from 01st January 2005, the Official Journal of The Patent Office is required to be published under the Statute. This Journal is being published on weekly basis on every Friday covering the various proceedings on Patents as required according to the provision of Section 145 of the Patents Act 1970. All the enquiries on this Official Journal and other information as required by the public should be addressed to the Controller General of Patents, Designs & Trade Marks. Suggestions and comments are requested from all quarters so that the content can be enriched.

(**Chaitanya Prasad**)
CONTROLLER GENERAL OF PATENTS, DESIGNS & TRADE MARKS

14TH MARCH, 2014

CONTENTS

SUBJECT		*PAGE NUMBER*
JURISDICTION	:	**7953 – 7954**
SPECIAL NOTICE	:	**7955 – 7956**
EARLY PUBLICATION (DELHI)	:	**7957 – 7967**
EARLY PUBLICATION (MUMBAI)	:	**7968 – 7971**
EARLY PUBLICATION (CHENNAI)	:	**7972 – 7975**
EARLY PUBLICATION (KOLKATA)	:	**7976**
PUBLICATION AFTER 18 MONTHS (DELHI)	:	**7977 – 8125**
PUBLICATION AFTER 18 MONTHS (MUMBAI)	:	**8126 – 8265**
PUBLICATION AFTER 18 MONTHS (CHENNAI)	:	**8266 – 8539**
PUBLICATION AFTER 18 MONTHS (KOLKATA)	:	**8540 – 8590**
AMENDMENT UNDER SEC. 57 (KOLKATA)	:	**8591 – 8592**
PUBLICATION U/R 84(3) IN RESPECT OF APPLICATION FOR RESTORATION OF PATENT (CHENNAI)	:	**8593**
RESTORATION U/S. 60. (KOLKATA)	:	**8594**
PUBLICATION UNDER SECTION 43(2) IN RESPECT OF THE GRANT (DELHI)	:	**8595 – 8601**
PUBLICATION UNDER SECTION 43(2) IN RESPECT OF THE GRANT (MUMBAI)	:	**8602 – 8603**
PUBLICATION UNDER SECTION 43(2) IN RESPECT OF THE GRANT (CHENNAI)	:	**8604 – 8605**
PUBLICATION UNDER SECTION 43(2) IN RESPECT OF THE GRANT (KOLKATA)	:	**8606 – 8609**
INTRODUCTION TO DESIGN PUBLICATION	:	**8610**
COPYRIGHT PUBLICATION	:	**8611**
CANCELLATION PROCEEDINGS UNDER SECTION 19 OF THE DESIGNS ACT, 2000	:	**8612**
THE DESIGNS ACT 2000 SECTION 30 DESIGN ASSIGNMENT	:	**8613**
REGISTRATION OF DESIGNS	:	**8614 - 8656**

THE PATENT OFFICE
KOLKATA, 14/03/2014
Address of the Patent Offices/Jurisdictions

The following are addresses of all the Patent Offices located at different places having their Territorial Jurisdiction on a Zonal basis as shown below:-

1	Office of the Controller General of Patents, Designs & Trade Marks, Boudhik Sampada Bhavan, Near Antop Hill Post Office,S.M.Road,Antop Hill, Mumbai – 400 037 Phone: (91)(22) 24123311, Fax : (91)(22) 24123322 E-mail: cgpdtm@nic.in	4	The Patent Office, Government of India, Intellectual Property Rights Building, G.S.T. Road, Guindy, Chennai – 600 032. Phone: (91)(44) 2250 2081-84 Fax : (91)(44) 2250 2066 E-mail: chennai-patent@nic.in ❖ The States of Andhra Pradesh, Karnataka, Kerala, Tamil Nadu and the Union Territories of Puducherry and Lakshadweep.
2	The Patent Office, Government of India, Boudhik Sampada Bhavan, Near Antop Hill Post Office,S.M.Road,Antop Hill, Mumbai – 400 037 Phone: (91)(22) 24137701 Fax: (91)(22) 24130387 E-mail: mumbai-patent@nic.in ❖ The States of Gujarat, Maharashtra, Madhya Pradesh, Goa and Chhattisgarh and the Union Territories of Daman and Diu & Dadra and Nagar Haveli	5	The Patent Office (Head Office), Government of India, Boudhik Sampada Bhavan, CP-2, Sector –V, Salt Lake City, Kolkata- 700 091 Phone: (91)(33) 2367 1943/44/45/46/87 Fax: (91)(33) 2367 1988 E-Mail: kolkata-patent@nic.in ❖ Rest of India
3	The Patent Office, Government of India, Boudhik Sampada Bhavan, Plot No. 32., Sector-14, Dwarka, New Delhi – 110075 Phone: (91)(11) 2808 1921 – 25 Fax: (91)(11) 2808 1920 & 2808 1940 E.mail: delhi-patent@nic.in ❖ The States of Haryana, Himachal Pradesh, Jammu and Kashmir, Punjab, Rajasthan, Uttar Pradesh, Uttaranchal, Delhi and the Union Territory of Chandigarh.		

Website: www.ipindia.nic.in
www.patentoffice.nic.in

All applications, notices, statements or other documents or any fees required by the Patents Act, 1970 and The Patents (Amendment) Act, 2005 or by the Patents (Amendment) Rules, 2006 will be received only at the appropriate offices of the Patent Office.

Fees: The Fees may either be paid in cash or may be sent by Bank Draft or Cheques payable to the Controller of Patents drawn on a scheduled Bank at the place where the appropriate office is situated.

पेटेंट कार्यालय
कोलकाता, दिनांक 14/03/2014
कार्यालयों के क्षेत्राधिकार के पते

विभिन्न जगहों पर स्थित पेटेन्ट कार्यालय के पते आंचलिक आधार पर दर्शित उनके प्रादेशिक अधिकार क्षेत्र के साथ नीचे दिए गए हैं :-

1	कार्यालय: महानियंत्रक, एकस्व, अभिकल्प तथा व्यापार चिह्न, एनटॉप हिल डाकघर के समीप, एस. एम. रोड, एनटॉप हिल, मुम्बई -400 037, भारत. फोन: (91)(22) 24123311 फैक्स: (91)(22) 24123322 ई.मेल: cgpdtm@nic.in	4	पेटेंट कार्यालय चेन्नई, इंटेलेक्चुअल प्रोपर्टी राइट्स बिल्डिंग इंडस्ट्रियल इस्टेट एसआईडीसीओ आरएमडी गोडाउन एरिया एडजसेन्ट टु ईगल फ्लास्क जी.एस.टी. रोड, गायन्डी, चेन्नई - 600 032. फोन: (91)(44) 2250 2081-84 फैक्स: (91)(44) 2250-2066 ई.मेल: chennai-patent@nic.in ❖ आन्ध्र प्रदेश, कर्नाटक, केरल, तमिलनाडु तथा पुडुचेरी राज्य क्षेत्र एवं संघ शासित क्षेत्र, लक्षद्वीप
2	पेटेंट कार्यालय, भारत सरकार बौद्धिक संपदा भवन, एनटॉप हिल डाकघर के समीप, एस. एम. रोड, एनटॉप हिल, मुम्बई - 400 037, फोन: (91)(22) 2413 7701, फैक्स: (91)(22) 2413 0387 ई.मेल: mumbai-patent@nic.in ❖ गुजरात, महाराष्ट्र, मध्य प्रदेश, गोआ तथा छत्तीसगढ़ राज्य क्षेत्र एवं संघ शासित क्षेत्र, दमन तथा दीव, दादर और नगर हवेली.	5	पेटेंट कार्यालय कोलकाता (प्रधान कार्यालय), बौद्धिक संपदा भवन, सीपी-2, सेक्टर-V, साल्ट लेक सिटी, कोलकाता- 700 091, भारत. फोन: (91)(33) 2367 1943/44/45/46/87 फैक्स/Fax: (91)(33) 2367 1988 ई.मेल: kolkata-patent@nic.in ❖ भारत का अवशेष क्षेत्र
3	पेटेंट कार्यालय दिल्ली, बौद्धिक संपदा भवन, प्लॉट सं. 32, सेक्टर - 14, द्वारका, नई दिल्ली - 110 075. फोन: (91)(11) 2808 1921-25 फैक्स: (91)(11) 2808 1920, 2808 1940 ई.मेल: delhi-patent@nic.in ❖ हरियाणा, हिमाचल प्रदेश, जम्मू तथा कश्मीर, पंजाब, राजस्थान, उत्तर प्रदेश, दिल्ली तथा उत्तरांचल राज्य क्षेत्रों, एवं संघ शासित क्षेत्र चंडीगढ़		

वेबसाइट: http://www.ipindia.nic.in
www.patentoffice.nic.in

पेटेंट अधिनियम, 1970 तथा पेटेंट (संशोधन) अधिनियम, 2005 अथवा पेटेंट (संशोधन) नियम, 2006 द्वारा वांछित सभी आवेदन, सूचनाएँ, विवरण या अन्य दस्तावेज या कोई शुल्क पेटेंट कार्यालय के केवल उपयुक्त कार्यालय में स्वीकृत होंगे ।

शुल्क: शुल्क या तो नकद रूप में या "Controller of Patents" के नाम में देय बैंक ड्राफ्ट या चेक के द्वारा भेजी जा सकती है जो उसी स्थान के किसी अनुसूचित बैंक में प्रदत्त हो जहाँ उपयुक्त कार्यालय स्थित हैं।

SPECIAL NOTICE

18 Months publication as required under Section 11A of the Patents Act, 1970 as amended by the Patents (Amendment) Act, 2005.

Notice is hereby given that any person at any time before the grant of Patent may give representation by way of opposition to the Controller of Patents at appropriate office on the ground and in a manner specified under section 25(1) of the Patents (Amendment) Act, 2005 read with Rule 55 of the Patents (Amendment) Rules, 2006.

Notice is also given that if any interested person requests for copies of the complete specification, drawing and abstract of any application already published, the photocopy of the same can be supplied by the Patent Office as per the jurisdiction on payment of prescribed fees of Rs.4/- per page. If any further details are required to be obtained, the same can be provided by the respective Patent Offices on request.

(**Chaitanya Prasad**)
CONTROLLER GENERAL OF PATENTS, DESIGNS & TRADE MARKS

SPECIAL NOTICE

Under the new provision of the Patents Act, 1970 as amended by the Patents (Amendment) Act, 2005 and Rules there under, Publication of the matter relating to Patents in the Official Gazette of India Part III, Section 2 has been discontinued and instead The Official Journal of the Patent Office is being published containing all the activities of The Patent Office such as publication of all the patent applications after 18th months , grant of patents & all other information in respect of the proceedings as required under the provisions of the Patents (Amendment) Act, 2005 and Rules thereunder on weekly basis on every **Friday**.

The Journal is uploaded in the website every Friday. So Paper form and CD-ROM form of the Journal are discontinued from 01/01/2009.

SPECIAL NOTICE

Every effort is being taken to publish all the patent applications under section 11(A) of the Patents Act. However, if duplication of publication of any application is found, then earlier date of publication will be taken for the purpose of provisional protection for applicant and Patent Office will grant Patent not before six months from the date of second publication, provided that there is there is no third party representation.

Early Publication:

The following patent applications have been published under section 11A (2) of The Patents (Amendment) Act 2005 and rule 24A of The Patents (Amendment) Rules, 2006. Any person may file representation by way of opposition to the Controller of Patents at the appropriate office against the grant of the patent in the prescribed manner under section 25(1) of the Patents (Amendment) Act 2005 read with the rule 55 of The Patents (Amendment) Rules, 2006:

(12) PATENT APPLICATION PUBLICATION

(21) Application No.255/DEL/2014 A

(19) INDIA

(22) Date of filing of Application :28/01/2014

(43) Publication Date : 14/03/2014

(54) Title of the invention : PACKAGING MACHINE

(51) International classification	:B65B	(71)**Name of Applicant :**
(31) Priority Document No	:NA	**1)Akash Pack Tech Pvt. Ltd.**
(32) Priority Date	:NA	Address of Applicant :Plot No. 89, HSIDC, Sector-59, HSIDC
(33) Name of priority country	:NA	Industrial Estate, Faridabad- 121 004 Haryana India
(86) International Application No	:NA	(72)**Name of Inventor :**
Filing Date	:NA	**1)SINGH, Pratap**
(87) International Publication No	: NA	
(61) Patent of Addition to Application Number	:NA	
Filing Date	:NA	
(62) Divisional to Application Number	:NA	
Filing Date	:NA	

(57) Abstract :
A packaging machine (100) is described herein. In an embodiment, the packaging machine includes a control unit (102), a conveying unit (104) and a plurality of dispensing units (106). The control unit (102) may coordinate operations of the packaging machine (100). The conveying unit (104) may include a loading station (114) for loading a plurality of containers, and may then carry the plurality of containers for filling and packaging. Further, the plurality of dispensing units (106) may fill the plurality of containers with a product to be packaged. The control unit (102) operates the conveying unit (104) to position a predefined number of containers below the plurality of dispensing units (106) in such a manner that at least one container is positioned below each of the plurality of dispensing units (106). Further, the plurality of dispensing units (106) is operated to simultaneously fill the predefined number of containers.

No. of Pages : 19 No. of Claims : 10

(12) PATENT APPLICATION PUBLICATION
(19) INDIA
(22) Date of filing of Application :01/01/2013
(21) Application No.4/DEL/2013 A
(43) Publication Date : 14/03/2014

(54) Title of the invention : SANKET - 247 ECG MONITORING SYSTEM

(51) International classification :A61B
(31) Priority Document No :NA
(32) Priority Date :NA
(33) Name of priority country :NA
(86) International Application No :NA
Filing Date :NA
(87) International Publication No : NA
(61) Patent of Addition to Application Number :NA
Filing Date :NA
(62) Divisional to Application Number :NA
Filing Date :NA

(71)**Name of Applicant :**
1)AGATSA SOFTWARE PRIVATE LIMITED
Address of Applicant :C 203 KRISHNA APRA RESIDENCY SECRTOR-61 BEHIND SAI MCHAL NOIDA, UP-201301 India
(72)**Name of Inventor :**
1)NEHA RASTOGI

(57) Abstract :
The present invention relates to a portable electrocardiogram (ECG) device for selectively monitoring and recording ECG signals, comprising a sensor (1) to read the voltage level when touched by a user; a hardware circuit for receiving voltage and passing ECG data to a microprocessor that controls said ECG data with the help of a software and raises a predetermined alarm or a sound buzzer through a first light emitting diode (LED) (3) in case of an emergency; and a power source associated to a second light emitting diode (LED) (5).

No. of Pages : 9 No. of Claims : 10

(12) PATENT APPLICATION PUBLICATION
(19) INDIA
(22) Date of filing of Application :04/02/2014
(21) Application No.325/DEL/2014 A
(43) Publication Date : 14/03/2014

(54) Title of the invention : ASHA-THE BRAIN COMPUTER INTERFACE

(51) International classification :G06F
(31) Priority Document No :NA
(32) Priority Date :NA
(33) Name of priority country :NA
(86) International Application No :NA
Filing Date :NA
(87) International Publication No : NA
(61) Patent of Addition to Application Number :NA
Filing Date :NA
(62) Divisional to Application Number :NA
Filing Date :NA

(71)**Name of Applicant :**
1)VASUDHA VASHISHT
Address of Applicant :H. NO.1556, SECTOR 16 FARIDABAD 121002, HARYANA, INDIA
(72)**Name of Inventor :**
1)VASUDHA VASHISHT
2)TANUPRIYA CHOUDHURY
3)DR. S.V.A.V. PRASAD
4)S. P. SHARMA

(57) Abstract :
Brain Copmputer interface helps and enables people throught their mental activities to perform applications and to operate devices., We developed a system named ASHA The Brain computer interface that will recognize the words/image/music thought and will result them or pc ASHA uses one of the noninvasive method i.e. EEG for recongizing brain signals and gives more accurate resulds as compared to existing BCls. The main approach used in this BCI is based on the self regulation of the EEG response, operant Conditioning approach is done, The BCI can work on both offine and online data. Direct EEG electrodes are uses for online analysis whereas for offline analysis artificial brain concept is used

No. of Pages : 9 No. of Claims : 4

(12) PATENT APPLICATION PUBLICATION
(19) INDIA
(22) Date of filing of Application :28/01/2013
(21) Application No.218/DEL/2013 A
(43) Publication Date : 14/03/2014

(54) Title of the invention : A HIGH BARRIER LAMINATE STRUCTURE HAVING SANDWITCHED REVERSE PRINTING AND METHOD OF MANUFACTURING THEREOF

(51) International classification :B32B
(31) Priority Document No :NA
(32) Priority Date :NA
(33) Name of priority country :NA
(86) International Application No :NA
Filing Date :NA
(87) International Publication No : NA
(61) Patent of Addition to Application Number :NA
Filing Date :NA
(62) Divisional to Application Number :NA
Filing Date :NA

(71)**Name of Applicant :**
1)CHATURVEDI, ASHOK
Address of Applicant :305, III FLOOR, BHANOT CORNER, PAMPOSH ENCLAVE, GK-1, NEW DELHI-110048 India
(72)**Name of Inventor :**
1)CHATURVEDI, ASHOK

(57) Abstract :
A high barrier laminate structure for making packages is described. The laminate comprises a first set of layers of co-extruded film being reverse printed underside, an adhesive applied on the reverse printed underside of the film and a second set of layers of co-extruded Polyethylene (PE) film being adhered to the said first set of layers of co-extruded film duly reverse printed. The first set of layers of co-extruded film is a 7 layers or a 9 layers film and the second set of layers of co-extruded Polyethylene (PE) is typically a 3 layers film

No. of Pages : 19 No. of Claims : 25

(12) PATENT APPLICATION PUBLICATION
(19) INDIA
(22) Date of filing of Application :06/01/2014
(21) Application No.27/DEL/2014 A
(43) Publication Date : 14/03/2014

(54) Title of the invention : FAKE CHANGING ROOM.

(51) International classification :E04B
(31) Priority Document No :NA
(32) Priority Date :NA
(33) Name of priority country :NA
(86) International Application No :NA
Filing Date :NA
(87) International Publication No : NA
(61) Patent of Addition to Application Number :NA
Filing Date :NA
(62) Divisional to Application Number :NA
Filing Date :NA

(71)**Name of Applicant :**
1)DEVI NIRMALA
Address of Applicant :GANDHI CHOWK, MANDI DABWALI, SIRSA, HARYANA-125104 India
(72)**Name of Inventor :**
1)DEVI NIRMALA
2)GUPTA NITIKA

(57) Abstract :
The invention discloses a portable dressing room which comprises of a curtain member having a valcro/zip/thread on side to close the gate wall, a plurality of base members, a plurality of first bar elements and a plurality of second bar elements. This apparatus is easily stable on all type of surfaces even on sand also. The frame of the dressing room is supported by the base members along with the first bar elements and the second bar elements. The bottom base faces of the second bar elements are arranged at the upper base faces of the first bar elements while the lower base faces of the first bar elements are arranged at the upper base faces of the base members through one or more connection mechanism. The curtain member is covered across the beam formed by the base members, the first bar elements.and the second bar elements.

No. of Pages : 30 No. of Claims : 10

(12) PATENT APPLICATION PUBLICATION
(19) INDIA
(22) Date of filing of Application :10/02/2014
(21) Application No.375/DEL/2014 A
(43) Publication Date : 14/03/2014

(54) Title of the invention : FOLDING STOVE

(51) International classification :F24C
(31) Priority Document No :14/020,415
(32) Priority Date :06/09/2013
(33) Name of priority country :U.S.A.
(86) International Application No :NA
Filing Date :NA
(87) International Publication No : NA
(61) Patent of Addition to Application Number :NA
Filing Date :NA
(62) Divisional to Application Number :NA
Filing Date :NA

(71)**Name of Applicant :**
1)Standard Brands (UK) Limited
Address of Applicant :4 Cleeve Court, Cleeve Road, Leatherhead, Surrey, KT22 7SD U.K.
(72)**Name of Inventor :**
1)TAN, Calvin

(57) Abstract :
Field of Invention This invention relates to portable cooking stoves and in particular, to 5 lightweight, flatpackable stoves that are easily deployed into the cooking arrangement using only a single step, and that have an integrated cooking chamber. The integrated food chamber should be capable of holding sufficient water to be boiled for a drink, or to heat sufficient food to provide for a hot meal for one person. The cooking stoves of 10 the present invention are intended primarily for outdoor leisure pursuits such as backpacking, hiking and camping, as well as serving humanitarian and military dismounted soldier needs.

No. of Pages : 21 No. of Claims : 21

(12) PATENT APPLICATION PUBLICATION
(19) INDIA
(22) Date of filing of Application :03/02/2014
(21) Application No.318/DEL/2014 A
(43) Publication Date : 14/03/2014

(54) Title of the invention : METHOD FOR SETTING A GEAR RATIO OF A FAN DRIVE GEAR SYSTEM OF A GAS TURBINE ENGINE

(51) International classification :f02c
(31) Priority Document No :13/758,086
(32) Priority Date :04/02/2013
(33) Name of priority country :U.S.A.
(86) International Application No :NA
Filing Date :NA
(87) International Publication No : NA
(61) Patent of Addition to Application Number :NA
Filing Date :NA
(62) Divisional to Application Number :NA
Filing Date :NA

(71)**Name of Applicant :**
1)United Technologies Corporation
Address of Applicant :One Financial Plaza, Hartford, Connecticut 06101, U.S.A.
(72)**Name of Inventor :**
1)William G. Sheridan
2)Karl L. Hasel

(57) Abstract :
A gas turbine engine according to an exemplary aspect of the present disclosure includes, among other things, a fan section including a fan rotatable about an axis and a speed reduction device in communication with the fan. The speed reduction device includes a planetary fan drive gear system with a planet gear ratio of at least 2.5. A fan blade tip speed of the fan is less than 1400 fps.

No. of Pages : 16 No. of Claims : 22

(12) PATENT APPLICATION PUBLICATION
(21) Application No.3265/DEL/2013 A
(19) INDIA
(22) Date of filing of Application :04/11/2013
(43) Publication Date : 14/03/2014

(54) Title of the invention : A DEVICE TO BE USED IN AUTOMOBILES TO INDICATE SPEED ALONG WITH APPROXIMATE VALUE OF FUEL EFFICIENCY AND SUGGESTED GEAR NUMBER TO BE USED AND SAFE LIMITS OF SPEED

(51) International classification :G01P
(31) Priority Document No :NA
(32) Priority Date :NA
(33) Name of priority country :NA
(86) International Application No :NA
Filing Date :NA
(87) International Publication No : NA
(61) Patent of Addition to Application Number :NA
Filing Date :NA
(62) Divisional to Application Number :NA
Filing Date :NA

(71)**Name of Applicant :**
1)ER LALIT MOHAN
Address of Applicant :SITA RAM HOUSE, STREET NO. 6, BIBIWALA ROAD, RANKERS, POINT COMPLEX, BATHINDA -151001, PUNJAB India
2)ER ASHMEET SINGH SIDHU
(72)**Name of Inventor :**
1)ER LALIT MOHAN
2)ER ASHMEET SINGH SIDHU

(57) Abstract :
A device to be used in automobiles for indicating the measured value of speed along with pre-calibrated value of fuel efficiency and suggested gear number simultaneously using moving coil deflection meters or their equivalent display arrangements used for indicating speed, speed markings/calibrations (103) used for measuring speed of vehicle, pre-calibrated fuel efficiency markings (104) for giving fuel efficiency, optimal gear markings (105) for suggested gear for the corresponding speed indicated by deflection of a single pointer (101). At present the driver is unable to determine the speed and gear to drive in, which will give her/him maximum fuel efficiency, as this data is not available to her/him in a simple format in automobiles. Fuel efficiency and gear scales are calibrated using the performance and efficiency parameters obtained at testing stage by testing agency or research lab. It suggests the driver to drive the vehicle at optimum speed to maximize fuel efficiency and minimize wear and tear of the vehicle along with warning beyond safe limits of speed in the given country/state.

No. of Pages : 40 No. of Claims : 9

(12) PATENT APPLICATION PUBLICATION
(19) INDIA
(22) Date of filing of Application :31/12/2013
(21) Application No.3833/DEL/2013 A
(43) Publication Date : 14/03/2014

(54) Title of the invention : COMBINED LOCK MECHANISM FOR TWO-WHEELERS

(51) International classification :E05B
(31) Priority Document No :NA
(32) Priority Date :NA
(33) Name of priority country :NA
(86) International Application No :NA
Filing Date :NA
(87) International Publication No : NA
(61) Patent of Addition to Application Number :NA
Filing Date :NA
(62) Divisional to Application Number :NA
Filing Date :NA

(71)**Name of Applicant :**
1)JAY USHIN LTD.
Address of Applicant :PLOT NO. 282, PHASE - 6, SECTOR 37, GURGAON, HARYANA, INDIA
(72)**Name of Inventor :**
1)RAMESH YADAV
2)ANIL KUMAR
3)YASHBIR
4)MUKESH KUMAR SAINI

(57) Abstract :
The present subject matter relates to an ignition switch operated combined lock mechanism in two-wheelers that includes an ignition key inserted in the ignition switch for actuating the combined lock mechanism provided with an immobilizer system. The two wheelers are provided with an ignition body receiving a movable ignition lock cylinder attached to the ignition switch. Further, the combined lock mechanism is provided with a cam rotatably positioned in the ignition body in a manner that an anticlockwise rotation of the ignition key transfers the movement of the cam to a switch case assembly via a slider case assembly. The present subject matter discloses that the slider case assembly includes a seat opening slider and a fuel tank opening slider disposed in respective parallel case slots devised in the slider case assembly. The seat opening slider and the fuel tank opening slider are selectively pushed by respective movable carrier elements provided with the cam. Further, the movements of the seat opening slider and the fuel tank opening slider pull the cables connected to a seat cover and a fuel tank cover respectively. The combined lock mechanism also discloses that a terminal base assembly is attached to the slider case assembly.

No. of Pages : 23 No. of Claims : 10

(12) PATENT APPLICATION PUBLICATION
(19) INDIA
(22) Date of filing of Application :03/02/2014
(21) Application No.757/DELNP/2014 A
(43) Publication Date : 14/03/2014

(54) Title of the invention : EASY PULL BOTTLE CAP

(51) International classification :B65D
(31) Priority Document No :13/267264
(32) Priority Date :06/10/2011
(33) Name of priority country :U.S.A.
(86) International Application No :PCT/US2011/067134
Filing Date :23/12/2011
(87) International Publication No :WO 2013/081638
(61) Patent of Addition to Application Number :NA
Filing Date :NA
(62) Divisional to Application Number :NA
Filing Date :NA

(71)**Name of Applicant :**
1)FRISHMAN Abe
Address of Applicant :2924 Cambridgeshire Carrollton TX 75007 U.S.A.
(72)**Name of Inventor :**
1)FRISHMAN Abe

(57) Abstract :
A crown for a bottle or other container the crown comprised of an opener assembly having a pull tab ring and a pull tab secured to the crown by a rivet and one or more scoring lines between the rivet and the edge of the skirt of the crown. A scoring line having an upper radial segment that extends from the opener assembly to the skirt along a radial axis and a lower annular segment that extends circumferentially along the skirt in an annular direction and extending from a terminus of the upper radial segment. The lower annular segment defines in a second horizontal plane that is equidistant to the first horizontal plane associated with the edge of the crown.

No. of Pages : 50 No. of Claims : 13

(12) PATENT APPLICATION PUBLICATION
(19) INDIA
(22) Date of filing of Application :21/01/2014
(21) Application No.191/DEL/2014 A
(43) Publication Date : 14/03/2014

(54) Title of the invention : CIRCUIT FOR CONTROLLING GENERATION OF DC VOLTAGE FROM AN ALTERNATING CURRENT GENERATOR

(51) International classification :H02P
(31) Priority Document No :NA
(32) Priority Date :NA
(33) Name of priority country :NA
(86) International Application No :NA
Filing Date :NA
(87) International Publication No : NA
(61) Patent of Addition to Application Number :NA
Filing Date :NA
(62) Divisional to Application Number :NA
Filing Date :NA

(71)**Name of Applicant :**
1)Napino Auto And Electronics Limited
Address of Applicant :753-754, Udyog Vihar, Phase V, Gurgaon 122016, Haryana, India
(72)**Name of Inventor :**
1)MENON, K. C.
2)SOMWANSHI, Balaji G.
3)KUMAR, Deepak
4)GHONGATE, Avinash
5)KULKARNI, Chetan

(57) Abstract :
The present invention relates to lamp voltage control circuit used to control the lamp side SCR and/or to a battery voltage control circuit used to control the battery side SCR. The Lamp side and battery side control circuits either individually or together part of series type rectifier regulator unit which receives input AC voltage from alternating current generator and provides controlled voltages to the lamp load and/or the battery or DC loads which are connected in the series with lamp side and battery side control component like SCR respectively.

No. of Pages : 51 No. of Claims : 24

(12) PATENT APPLICATION PUBLICATION
(21) Application No.261/MUM/2014 A
(19) INDIA
(22) Date of filing of Application :24/01/2014
(43) Publication Date : 14/03/2014

(54) Title of the invention : A METHOD FOR IMPROVING MUSICAL COMPOSITION AND COMPOSITION THEREOF

(51) International classification	:G10H 1/44, G10H1/053, G06F17/30
(31) Priority Document No	:NA
(32) Priority Date	:NA
(33) Name of priority country	:NA
(86) International Application No	:NA
Filing Date	:NA
(87) International Publication No	: NA
(61) Patent of Addition to Application Number	:NA
Filing Date	:NA
(62) Divisional to Application Number	:NA
Filing Date	:NA

(71)**Name of Applicant :**
1)SAPRE RAJEEV GAJANAN
Address of Applicant :C-2, DHAWAL COMPLEX, BEHIND VIHAR DELUXE RATANAGIRI, 415612. MAHARASHRA, INDIA.
(72)**Name of Inventor :**
1)SAPRE RAJEEV GAJANAN
2)PRABHUDESAI SHRUTI SUDHIR
3)KUSHTE PUJA NARESH
4)NATU DIWA PRADEEP

(57) Abstract :
In a preferred mode of the invention it is provided that the following is the methodology for making music or songs more melodious; the following steps are involved in making of the melodious music composition, (d) Collecting information about various parts of the instrument music/songs; fe) analysis each instrument music/song considering its various parts by finding ratio among these parts by considering words, letters and durations of these parts in terms of seconds; (f) arrangement of each of the component of the instrument music/song according to predetermined time in seconds, so as it results in the ratio of variables as it results in the range of 1.51 to 1.71, more particularly it is 1.618; According to present invention the instrument music/ song composition is composed to include any group of elements such as notes, intervals, chords, chord progressions, arpeggios, and/or scales non-limitedly including tangible objects such as musical scores or notations of such elements that are written or otherwise stored/saved wherein these variables are composed according to principle of golden rule, Wherein in recording medium is selected from Digital audio formats includes digital Audio tape, Digital Compact Cassette, Compact Disc, Hard disk recorder, DVD-Audio, minidisc, super Audio CD, Blu-ray Disc (BD);

No. of Pages : 18 No. of Claims : 7

(12) PATENT APPLICATION PUBLICATION
(19) INDIA
(22) Date of filing of Application :21/08/2013
(21) Application No.2727/MUM/2013 A
(43) Publication Date : 14/03/2014

(54) Title of the invention : TALK 2 RUN

(51) International classification	:G10L15/00, G06Q50/20
(31) Priority Document No	:NA
(32) Priority Date	:NA
(33) Name of priority country	:NA
(86) International Application No	:NA
Filing Date	:NA
(87) International Publication No	: NA
(61) Patent of Addition to Application Number	:NA
Filing Date	:NA
(62) Divisional to Application Number	:NA
Filing Date	:NA

(71)**Name of Applicant :**
1)AADITYA K. KALE
Address of Applicant :65, BALAJI NAGAR (W), NAGPUR, MAHARASHTRA, INDIA.
2)ADITYA S. DESHPANDE
(72)**Name of Inventor :**
1)AADITYA K. KALE
2)ADITYA S. DESHPANDE

(57) Abstract :
An algorithm comprising of speech recognition engine for the operating systems Microsoft Windows xp onwards, Apple Mac os X 10.5 onwards and Apple iOS 4 onwards containing an indexed grammar with an attached microphone to search and open files, folders, websites in relevant cases and capable of receiving speech input for programming in various programming languages and facilitating the user to customise the grammar for speech recognition engine,

No. of Pages : 12 No. of Claims : 8

(12) PATENT APPLICATION PUBLICATION
(19) INDIA
(22) Date of filing of Application :19/02/2014

(21) Application No.571/MUM/2014 A
(43) Publication Date : 14/03/2014

(54) Title of the invention : IMPROVED PROCESS AND DEVICE FOR BIODIESEL PRODUCTION FOR HOME APPLIANCE

(51) International classification	:C10G3/00, C10L1/08
(31) Priority Document No	:NA
(32) Priority Date	:NA
(33) Name of priority country	:NA
(86) International Application No	:NA
Filing Date	:NA
(87) International Publication No	: NA
(61) Patent of Addition to Application Number	:NA
Filing Date	:NA
(62) Divisional to Application Number	:NA
Filing Date	:NA

(71)**Name of Applicant :**
1)THE AUTOMOTIVE RESEARCH ASSOCIATION OF INDIA
Address of Applicant :S. NO. 102, VETAL HILL, OFF PAUD ROAD, KOTHRUD, PUNE - 411 038, MAHARASHTRA, INDIA
(72)**Name of Inventor :**
1)DR. KAMALKISHORE CHHAGANLAL VORA

(57) Abstract :
The present invention relates to an improved device and process for the production of biodiesel from variety of oil seeds in homes by using a compact model which will require low floor space requirement similar to that of home appliances like washing machine and also cost effective and efficient. This will help all vehicle users to generate fuel required for their personal vehicle, on day to day life. Following invention is described in detail with the help of Figure 1 of sheet 1 which shows process diagram, Figure 2 of sheet 2 shows the whole setup of the product, Figure 3 of sheet 3 shows front view of reactor and Figure 4 of sheet 4 shows top view of the reactor.

No. of Pages : 23 No. of Claims : 7

(12) PATENT APPLICATION PUBLICATION
(19) INDIA
(22) Date of filing of Application :19/02/2014
(21) Application No.572/MUM/2014 A
(43) Publication Date : 14/03/2014

(54) Title of the invention : DECELERATION FUEL CUT-OFF FOR GASEOUS FUELLED 2 AND 3 WHEELER VEHICLES FOR IMPROVING FUEL ECONOMY AND EMISSIONS REDUCTION.

(51) International classification	:F02D 41/12, F02D 1/00
(31) Priority Document No	:NA
(32) Priority Date	:NA
(33) Name of priority country	:NA
(86) International Application No	:NA
Filing Date	:NA
(87) International Publication No	: NA
(61) Patent of Addition to Application Number	:NA
Filing Date	:NA
(62) Divisional to Application Number	:NA
Filing Date	:NA

(71)**Name of Applicant :**
1)THE AUTOMOTIVE RESEARCH ASSOCIATION OF INDIA
Address of Applicant :S. NO. 102, VETAL HILL, OFF PAUD ROAD, KOTHRUD, PUNE - 411 038, MAHARASHTRA, INDIA
(72)**Name of Inventor :**
1)SD RAIRIKAR MANAGER
2)KP KAVATHEKAR DGM
3)SM TEMBE MANAGER
4)DR. S.S. THIPSE GENERAL MANAGER
5)NB DHANDE DEPUTY DIRECTOR
6)Y.R. JAGDALE DEPUTY ENGINEER
7)NV MARATHE SR. DEPUTY DIRECTOR & HOD

(57) Abstract :
Present invention provides DFCO control systems for engines to increase fuel efficiency, emission reduction and to control fuel delivery by using engine vacuum.This system cuts off part of the gaseous fuel flow to the gas circuit of the Gas air mixer to prevent afterburning in the exhaust system during deceleration & idling. In this system engine vacuum is used to control fuel delivery to gas air mixer. The Deceleration is sensed by sensor fitted on accelerator which calculates & determines the deceleration mode & which in turn operates Fuel Cut option by opening solenoid which in turn connects the engine vacuum to breathing side of regulator. This engine vacuum lifts the diaphragm in opposite direction there by the extra fuel going to engine during deceleration gets cut off. The engine vacuum applied on breather side of regulator is balanced with the breather jet mechanism insuch a way that it controls the diaphragm movement in order to meter the optimum fuel to run the engine during deceleration mode. Following invention is described in detail with the help of Figure 1 of sheet 1 showing construction of the preferred embodiment.

No. of Pages : 16 No. of Claims : 10

(12) PATENT APPLICATION PUBLICATION
(19) INDIA
(22) Date of filing of Application :28/02/2014
(21) Application No.1019/CHE/2014 A
(43) Publication Date : 14/03/2014

(54) Title of the invention : EF BRICKS

(51) International classification :C04B28/00
(31) Priority Document No :NA
(32) Priority Date :NA
(33) Name of priority country :NA
(86) International Application No :NA
Filing Date :NA
(87) International Publication No : NA
(61) Patent of Addition to Application Number :NA
Filing Date :NA
(62) Divisional to Application Number :NA
Filing Date :NA

(71)**Name of Applicant :**
1)S. ANAND
Address of Applicant :2/151, PILLAIYAR KOIL STREET, KARIYANGUDI - 610 106, THAPPALMPULIYUR VIA, TIRUVARUR DT Tamil Nadu India
(72)**Name of Inventor :**
1)S. ANAND

(57) Abstract :
The use of plastic waste in Fly Ash Bricks is desirable because of benefits such as use of disposed plastics without being discarded, increased workability and reduction of Quarry Dust consumption. However, the use of plastic waste leads to an increased strength with long duration. The concurrent use of the two byproducts will lead to remarkable range of economic and environmental benefits. Quarry dust increases the compressive strength of concrete but reduces the workability that is compensated by addition of plastic waste. In this study, we mixed Fly Ash, Cement, Quarry Dust, Plastic waste, Lime and water together. The solution was then conveyed to mould machine through conveyer belt and the bricks are moulded as per the mould. Then the process of curing and drying is done for 25 - 28 days and 5--7 days respectively. After curing and drying, tests such as Compression strength test and Water Absorption tests are conducted. The present study attempts to investigate the influence of partial addition of plastic waste to quarry dust on the compression strength and water absorption by moulded_bricks.

No. of Pages : 25 No. of Claims : 4

(12) PATENT APPLICATION PUBLICATION
(19) INDIA
(22) Date of filing of Application :28/02/2014
(21) Application No.1017/CHE/2014 A
(43) Publication Date : 14/03/2014

(54) Title of the invention : SALT WATER WELDING MACHINE

(51) International classification :B23K
(31) Priority Document No :NA
(32) Priority Date :NA
(33) Name of priority country :NA
(86) International Application No :NA
Filing Date :NA
(87) International Publication No : NA
(61) Patent of Addition to Application Number :NA
Filing Date :NA
(62) Divisional to Application Number :NA
Filing Date :NA

(71)**Name of Applicant :**
1)E. VINOTH KUMAR
Address of Applicant :NO. 10, YASSER ST, DEVIKARUMARIAMMAN NAGAR, PALLIKARNAI Tamil Nadu India
2)P. VENKATESHWARAN
3)K. SURENDHARAN
(72)**Name of Inventor :**
1)P. VENKATESHWARAN
2)K. SURENDHARAN
3)E. VINOTH KUMAR

(57) Abstract :
An apparatus for welding

No. of Pages : 9 No. of Claims : 3

(12) PATENT APPLICATION PUBLICATION
(19) INDIA
(22) Date of filing of Application :19/07/2013
(21) Application No.3235/CHE/2013 A
(43) Publication Date : 14/03/2014

(54) Title of the invention : AN AUTO LOADING MECHANISM FOR FIREARMS

(51) International classification :F41A
(31) Priority Document No :NA
(32) Priority Date :NA
(33) Name of priority country :NA
(86) International Application No :NA
Filing Date :NA
(87) International Publication No : NA
(61) Patent of Addition to Application Number :NA
Filing Date :NA
(62) Divisional to Application Number :NA
Filing Date :NA

(71)**Name of Applicant :**
1)HIMANSHU SINGH
Address of Applicant :D 65, MIG BARRA WORLD BANK, KANPUR, U.P., INDIA
(72)**Name of Inventor :**
1)HIMANSHU SINGH

(57) Abstract :
The present invention relates to an auto loading mechanism of rifle. In one embodiment the mechanism includes a barrel section including a bore to guide cartridge and a barrel extension region including a locking edge, a bolt section bonded to the barrel section, wherein the bolt section having a longitudinal slot for the movement of striker rod and a cartridge holding chamber in the lower portion thereof, a cam rod including a locking platform positioned over the barrel section (a first region) and the bolt section (a second region), wherein the first region of the cam rod is partially enclosed by the barrel extension region and the second region of the cam rod attached to the bolt section using the fulcrum and a gas block defining a piston between the cam rod and the barrel section, the piston includes a orifice, wherein the orifice of the piston receives the gas, originated in the bore during motion, causing the pressure in the gas block which triggers the cam rod to raise until the cartridge leaves the bore of the barrel region, wherein the locking platform of the cam rod locks with the locking edge of the barrel extension thereby preventing the backward movement of bolt.

No. of Pages : 34 No. of Claims : 10

(12) PATENT APPLICATION PUBLICATION
(19) INDIA
(22) Date of filing of Application :06/03/2014
(21) Application No.1139/CHE/2014 A
(43) Publication Date : 14/03/2014

(54) Title of the invention : ELECTRICITY FREE AUTOMATIC WATER FLOW CONTROL SHUT-OFF SYSTEM FOR HOUSE HOLD APPLICATION

(51) International classification :f17d
(31) Priority Document No :NA
(32) Priority Date :NA
(33) Name of priority country :NA
(86) International Application No :NA
Filing Date :NA
(87) International Publication No : NA
(61) Patent of Addition to Application Number :NA
Filing Date :NA
(62) Divisional to Application Number :NA
Filing Date :NA

(71)**Name of Applicant :**
1)S. RENOLD ELSEN
Address of Applicant :6 VENUS STREET, AYAPPA NAGAR, K K NAGAR, TRICHY - 620 021 Tamil Nadu India
2)M.S. MATHAN
3)B. NAVEEN
4)C. SIVARAMALINGAM
5)E. YOGARAJ
(72)**Name of Inventor :**
1)S. RENOLD ELSEN
2)M.S. MATHAN
3)B. NAVEEN
4)C. SIVARAMALINGAM
5)E. YOGARAJ

(57) Abstract :
Water is one of the important and life supporting resources available to humans. But after all the efforts made to supply good water a large amount is wasted by humans to a great extent. Most of the drinking water supplied to homes is not done at proper timings in most of the cities, so most of the people are not able to get their share of water. A device which can be used to fill the water in a container and automatically stop it when the container is filled without human assistance is a permanent solution for both the above mentioned cases. A design of the system was synthesized and using modeling software it was designed. The dimensions of the parts in the system were carefully calculated for further fabrication.

No. of Pages : 13 No. of Claims : 8

(12) PATENT APPLICATION PUBLICATION
(19) INDIA
(22) Date of filing of Application :10/12/2013
(21) Application No.1387/KOL/2013 A
(43) Publication Date : 14/03/2014

(54) Title of the invention : BAMBOO REINFORCED CEMENT CONCRETING

(51) International classification	:E04C 5/00
(31) Priority Document No	:NA
(32) Priority Date	:NA
(33) Name of priority country	:NA
(86) International Application No	:NA
Filing Date	:NA
(87) International Publication No	: NA
(61) Patent of Addition to Application Number	:NA
Filing Date	:NA
(62) Divisional to Application Number	:NA
Filing Date	:NA

(71)**Name of Applicant :**
1)MANOJ KUMAR DAS
Address of Applicant :C/O LATE TARUN CHANDRA DAS VILL: ABHAYPUR, P.O. GERUAH P.S. HAJO DIST : KAMRUP(ASSAM) PIN : 781102 Assam India
(72)**Name of Inventor :**
1)MANOJ KUMAR DAS

(57) Abstract :
Bamboo Reinforced Cement Concreting is a cost effective method of construction of compositely reinforced load-bearing members like beams and columns etc. and their framing as well by using quality bamboo as main reinforcement, thereby replacing the requirement of TMT steel bars (in RCC frames) to a nominal that would act for bondage and anchorage to concrete together with bamboo reinforcement, in addition to providing secondary reinforcement of same nature at the same time. At first, bamboo reinforcement is formed by wrapping the quality bamboo splits over quality bamboo culms followed by tight curling with M/S coil. Thereafter, the bamboo reinforcement is installed in a prepared steel reinforcement with reduced or most nominal quantum of TMT steel. Next, a novel framing technique is applied to frame the structures and finally concreting is accordingly done to complete the structure. This way, a huge amount of steel reinforcement of about 75% that used in conventional practice can be saved besides savings of concrete too that amounts to about 30% depending upon the void generated to equal the bamboo reinforcement cage used as per requirement of the members to be reinforced, resulting in reduction of overall dead load too throughout the whole structure besides saving a huge amount of energy.

No. of Pages : 33 No. of Claims : 12

Publication After 18 Months:

The following Patent Applications have been published under Section 11A (3) of The Patents (Amendment) Act, 2005. Any Person may file representation by way of opposition to the Controller of Patents at the appropriate office against the grant of the patent in the prescribed manner under section 25(1) of the Patents (Amendment) Act, 2005 read with the rule 55 of The Patents (Amendment) Rules, 2006:

(12) PATENT APPLICATION PUBLICATION

(19) INDIA

(21) Application No.7674/DELNP/2012 A

(22) Date of filing of Application :04/09/2012

(43) Publication Date : 14/03/2014

(54) Title of the invention : METHOD FOR IDENTIFYING AN OBJECT

(51) International classification	:C09K11/68,C09K11/77,B41M3/14
(31) Priority Document No	:10 2010 007 566.3
(32) Priority Date	:10/02/2010
(33) Name of priority country	:Germany
(86) International Application No	:PCT/DE2011/075015
Filing Date	:09/02/2011
(87) International Publication No	:WO 2011/098083
(61) Patent of Addition to Application Number	:NA
Filing Date	:NA
(62) Divisional to Application Number	:NA
Filing Date	:NA

(71)**Name of Applicant :**

1)TAILORLUX GMBH

Address of Applicant :Stegerwaldstrae 39 48565 Steinfurt Germany

(72)**Name of Inventor :**

1)JSTEL Thomas

2)UHLICH Dominik

3)BETTENTRUP Helga

4)DEITERMANN Alex

5)RTTER Sebastian

(57) Abstract :

The invention relates to a method for identifying an object wherein said object has a security element which contains one or more inorganic luminescent pigments wherein the method comprises the steps of producing an emission spectrum of the luminescent pigment and comparing the obtained emission spectrum with the spectrum specified for the security element. The invention further relates to a security element by means of which it is possible to determine the authenticity of a product in a simple manner.

No. of Pages : 32 No. of Claims : 18

(12) PATENT APPLICATION PUBLICATION
(19) INDIA
(22) Date of filing of Application :04/09/2012
(21) Application No.7675/DELNP/2012 A
(43) Publication Date : 14/03/2014

(54) Title of the invention : VALVE SEAT

(51) International classification :C22C33/02,B22F1/00,B22F5/00
(31) Priority Document No :2010037386
(32) Priority Date :23/02/2010
(33) Name of priority country :Japan
(86) International Application No :PCT/JP2011/053744
Filing Date :21/02/2011
(87) International Publication No :WO 2011/105338
(61) Patent of Addition to Application Number :NA
Filing Date :NA
(62) Divisional to Application Number :NA
Filing Date :NA

(71)**Name of Applicant :**
1)KABUSHIKI KAISHA RIKEN
Address of Applicant :13 5 Kudankita 1 chome Chiyoda ku Tokyo 1028202 Japan
(72)**Name of Inventor :**
1)TAKAHASHI Rintarou
2)HENMI Hiroji

(57) Abstract :
Disclosed is a valve seat made of a combined iron based sintered alloy which is so highly resistant to abrasion and so satisfactorily machinable as to be capable of being used for an internal combustion engine of a cylinder fuel injection type which is ready for improvement of fuel efficiency low emission and high power. Specifically disclosed is a valve seat made of the combined iron based sintered alloy wherein hard particles and a solid lubricant are dispersed. By dispersing the comparatively coarse solid lubricant of an amount at such a level that never deteriorates the strength of the sintered body significantly self lubricating properties are imparted. Furthermore by dispersing the fine solid lubricant at such a level that never inhibits the combining of matrix particles with one another the machinability is improved.

No. of Pages : 18 No. of Claims : 6

(12) PATENT APPLICATION PUBLICATION
(19) INDIA
(22) Date of filing of Application :04/09/2012
(21) Application No.7676/DELNP/2012 A
(43) Publication Date : 14/03/2014

(54) Title of the invention : FIBROUS INSULATION BLOCK AND CONSTRUCTION METHOD FOR HEATED FURNACE SURFACE LINING USING SAME

(51) International classification :F27D1/00
(31) Priority Document No :2010080666
(32) Priority Date :31/03/2010
(33) Name of priority country :Japan
(86) International Application No :PCT/JP2011/058744
Filing Date :31/03/2011
(87) International Publication No :WO 2011/126061
(61) Patent of Addition to Application Number :NA
Filing Date :NA
(62) Divisional to Application Number :NA
Filing Date :NA

(71)**Name of Applicant :**
1)NIPPON STEEL & SUMITOMO METAL CORPORATION
Address of Applicant :6-1, MARUNOUCHI 2-CHOME,CHIYODA-KU, TOKYO 100-8071, JAPAN
(72)**Name of Inventor :**
1)KOHNO Kohji
2)ITAKUSU Motokuni
3)SATO Masaharu
4)UEHARA Takuo
5)OKANAKA Yoshitsugu
6)SHIRAISHI Tomonobu
7)GOTO Kenji
8)YAMANAKA Sho

(57) Abstract :
Disclosed are a fibrous insulation block which can improve work efficiency of lining construction in various types of refractory furnace in iron works and a construction method for a heated furnace surface lining using the same. Specifically disclosed is a fibrous insulation block which comprises: a unit block (2) formed by laminating fibrous insulation blankets under pressure; a packing material (3) which has a pressing surface abutting section (5) covering at least a part of each pressing surface (2a 2b) which are the side surfaces of the unit block in the direction in which the blankets are laminated and a heating surface protection section (6) connected to the pressing surface abutting section so as to cover at least a part of a heating surface (2c) of the unit block and in which a boundary section (7) between the pressing surface abutting section and the heating surface protection section covers an angle section formed by the pressing surfaces and the heating surface of the unit block; and a binding band (4) which maintains the shape of the unit block (2) using the packing material (3). The heating surface protection section (6) of the packing material (3) can be moved by the removal of the binding band and disposed on the same plane as the pressing surface abutting section and has handhold sections (10) provided therein.

No. of Pages : 53 No. of Claims : 14

(12) PATENT APPLICATION PUBLICATION
(19) INDIA
(22) Date of filing of Application :04/09/2012
(21) Application No.7678/DELNP/2012 A
(43) Publication Date : 14/03/2014

(54) Title of the invention : PHOSPHATE BONDED COMPOSITES AND METHODS

(51) International classification :C04B28/00,C04B28/34,C04B16/02
(31) Priority Document No :61/302757
(32) Priority Date :09/02/2010
(33) Name of priority country :U.S.A.
(86) International Application No :PCT/US2011/024146
Filing Date :09/02/2011
(87) International Publication No :WO 2011/100288
(61) Patent of Addition to Application Number :NA
Filing Date :NA
(62) Divisional to Application Number :NA
Filing Date :NA

(71)**Name of Applicant :**
1)LATITUDE 18 INC.
Address of Applicant :950 North Collier Blvd Suite 301 Marco Island Florida 34145 U.S.A.
(72)**Name of Inventor :**
1)WAGH Arun Shripad
2)PATEL Sameerkumar Vasantlal
3)MANGALAM Anand Paul

(57) Abstract :
Inorganic organic composite articles and methods for producing them using inorganic acidic/alkaline precursor components as inorganic adhesives is provided. Articles prepared therefrom provide improved flexibility zero flame spread no release of volatile organic compounds and low carbon foot print.

No. of Pages : 62 No. of Claims : 54

(12) PATENT APPLICATION PUBLICATION
(19) INDIA
(22) Date of filing of Application :04/09/2012
(21) Application No.7683/DELNP/2012 A
(43) Publication Date : 14/03/2014

(54) Title of the invention : SYSTEMS AND METHODS FOR FORMING AND PROCESSING ALLOY INGOTS

(51) International classification :C22B9/20,C22F1/16,C22F1/10
(31) Priority Document No :12/700954
(32) Priority Date :05/02/2010
(33) Name of priority country :U.S.A.
(86) International Application No :PCT/US2011/022209
Filing Date :24/01/2011
(87) International Publication No :WO 2011/097084
(61) Patent of Addition to Application Number :NA
Filing Date :NA
(62) Divisional to Application Number :NA
Filing Date :NA

(71)**Name of Applicant :**
1)ATI PROPERTIES INC.
Address of Applicant :1600 N.E. Old Salem Road Albany Oregon 97321 U.S.A.
(72)**Name of Inventor :**
1)MINISANDRAM Ramesh S.

(57) Abstract :
Processes and methods related to producing processing and hot working alloy ingots are disclosed. An alloy ingot is formed including an inner ingot core and an outer layer metallurgically bonded to the inner ingot core. The processes and methods are characterized by a reduction in the incidence of surface cracking of the alloy ingot during hot working.

No. of Pages : 44 No. of Claims : 22

(12) PATENT APPLICATION PUBLICATION
(19) INDIA
(22) Date of filing of Application :04/09/2012
(21) Application No.7684/DELNP/2012 A
(43) Publication Date : 14/03/2014

(54) Title of the invention : COMMUNICATION APPARATUS COMMUNICATION CONTROL METHOD AND COMMUNICATION SYSTEM

(51) International classification :H04B7/10
(31) Priority Document No :2010054935
(32) Priority Date :11/03/2010
(33) Name of priority country :Japan
(86) International Application No :PCT/JP2011/051443
Filing Date :26/01/2011
(87) International Publication No :WO 2011/111429
(61) Patent of Addition to Application Number :NA
Filing Date :NA
(62) Divisional to Application Number :NA
Filing Date :NA

(71)**Name of Applicant :**
1)SONY CORPORATION
Address of Applicant :1 7 1 Konan Minato ku Tokyo 1080075 Japan
(72)**Name of Inventor :**
1)MORIOKA Yuichi

(57) Abstract :
The timing to control the directivity of an antenna is recognized by a receiver apparatus and thereafter an optimum antenna beam is formed at that timing. Provided is a communication apparatus comprising: a first wireless communication unit capable of performing a wireless communication in accordance with a first communication mode; and a second wireless communication unit capable of performing a wireless communication in accordance with a second communication mode using a higher frequency band than the first communication mode. The second wireless communication unit decides based on a time point at which a predetermined control signal is received by the first wireless communication unit a reception timing to receive a beacon transmitted in accordance with the second communication mode and further forms at the decided reception timing a reception beam having the directivity learned in advance.

No. of Pages : 45 No. of Claims : 7

(12) PATENT APPLICATION PUBLICATION
(19) INDIA
(22) Date of filing of Application :04/09/2012
(21) Application No.7685/DELNP/2012 A
(43) Publication Date : 14/03/2014

(54) Title of the invention : PROCESS FOR MAKING A FILM/NONWOVEN LAMINATE

(51) International classification :A61F13/15,B26F1/24,B29C65/00
(31) Priority Document No :12/721905
(32) Priority Date :11/03/2010
(33) Name of priority country :U.S.A.
(86) International Application No :PCT/US2010/048415
Filing Date :10/09/2010
(87) International Publication No :WO 2011/112212
(61) Patent of Addition to Application Number :NA
Filing Date :NA
(62) Divisional to Application Number :NA
Filing Date :NA

(71)**Name of Applicant :**
1)THE PROCTER & GAMBLE COMPANY
Address of Applicant :One Procter & Gamble Plaza Cincinnati Ohio 45202 U.S.A.
(72)**Name of Inventor :**
1)STONE Keith Joseph
2)YOUNG Roger Dale

(57) Abstract :
An article includes a film and a non woven having fibers and an embossed seal joining a portion of the film and the non woven. The seal includes discrete extended elements formed in the film and surrounded by lands in the film. The discrete extended elements having open proximal ends open or closed distal ends and sidewalls disposed between the proximal and distal ends and portions of the discrete extended elements having a thickness less than that of the lands. Fibers of the non woven are embedded in at least one of the lands and in the sidewalls of the discrete extended elements through the open proximal ends.

No. of Pages : 47 No. of Claims : 20

(12) PATENT APPLICATION PUBLICATION
(19) INDIA
(22) Date of filing of Application :04/09/2012
(21) Application No.7686/DELNP/2012 A
(43) Publication Date : 14/03/2014

(54) Title of the invention : DOUBLE SIDEDLY SELF ADHESIVE PRODUCTS WITH HIGH OPTICAL QUALITY

(51) International classification :C09J7/02
(31) Priority Document No :10 2010 028 184.0
(32) Priority Date :26/04/2010
(33) Name of priority country :Germany
(86) International Application No :PCT/EP2011/055697
Filing Date :12/04/2011
(87) International Publication No :WO 2011/134782
(61) Patent of Addition to Application Number :NA
Filing Date :NA
(62) Divisional to Application Number :NA
Filing Date :NA

(71)**Name of Applicant :**
1)TESA SE
Address of Applicant :Quickbornstrae 24 20253 Hamburg Germany
(72)**Name of Inventor :**
1)DOLLASE Thilo
2)KOOP Matthias
3)SCHREIBER Ralph

(57) Abstract :
The invention relates to a double sidedly pressure sensitively adhesive product having a haze value (measured by test method B) of 5% or less comprising a carrier having a first surface and a second surface and also a first layer of pressure sensitive adhesive disposed on the first surface of the carrier and a second layer of pressure sensitive adhesive disposed on the second surface of the carrier characterized in that the carrier has a modulus of elasticity of 2.5 500 MPa.

No. of Pages : 32 No. of Claims : 6

(12) PATENT APPLICATION PUBLICATION
(19) INDIA
(22) Date of filing of Application :04/09/2012
(21) Application No.7687/DELNP/2012 A
(43) Publication Date : 14/03/2014

(54) Title of the invention : METHOD FOR REMOVING INK FROM PAPER

(51) International classification :D21C 5/02
(31) Priority Document No :61/303,828
(32) Priority Date :12/02/2010
(33) Name of priority country :U.S.A.
(86) International Application No :PCT/US2011/024501
Filing Date :11/02/2011
(87) International Publication No : NA
(61) Patent of Addition to Application Number :NA
Filing Date :NA
(62) Divisional to Application Number :NA
Filing Date :NA

(71)**Name of Applicant :**
1)AKZO NOBEL CHEMICALS INTERNATIONAL B.V.
Address of Applicant :Stationsstraat 77 NL-3811 MH Amersfoort The Netherlands
(72)**Name of Inventor :**
1)HAYNES Robert Daniel
2)AUGER Scott Barton

(57) Abstract :
A method for removing ink from printed paper comprising: (a) pulping printed paper at least 25 wt% of which is old newsprint at a consistency of at least about 3% to obtain a pulp slurry; (b) treating the pulp slurry with an ink removing system which system comprises: (i) a combination of lipase and at least one second enzyme chosen from amylase xylanase or cellulase and (ii) a non-ionic surfactant in amounts effective to release ink from said pulp slurry wherein the lipase is present in an amount of at least about 0.001 wt% based on the dry content of the pulp slurry and the ratio of the at least one second enzyme:lipase is at least about 1.2:1; and (c) separating the released ink from the pulp slurry wherein the treating step is carried out prior to a deinking flotation stage.

No. of Pages : 76 No. of Claims : 45

(12) PATENT APPLICATION PUBLICATION
(19) INDIA
(22) Date of filing of Application :04/09/2012
(21) Application No.7700/DELNP/2012 A
(43) Publication Date : 14/03/2014

(54) Title of the invention : MEDIA RECORDING/READING DEVICE AND MEDIA RECORDING/READING METHOD

(51) International classification :G11B20/12,G11B7/004,G11B20/10
(31) Priority Document No :2010112763
(32) Priority Date :17/05/2010
(33) Name of priority country:Japan
(86) International Application No :PCT/JP2011/061194
Filing Date :16/05/2011
(87) International Publication No :WO 2011/145559
(61) Patent of Addition to Application Number :NA
Filing Date :NA
(62) Divisional to Application Number :NA
Filing Date :NA

(71)**Name of Applicant :**
1)HITACHI CONSUMER ELECTRONICS CO. LTD.
Address of Applicant :2 1 Otemachi 2 chome Chiyoda ku Tokyo 1000004 Japan
(72)**Name of Inventor :**
1)AKAHOSHI Kenji

(57) Abstract :
Disclosed are a media recording/reading method and device in which recording interruptions due to excessive retries in a replacement process and unnecessary conversion processes in the recording/reading device are minimized when a replacement region management method using NAPs for replacement regions on write once media is adapted for use as a replacement region management method for replacement regions on rewritable media. Upon media initialization or replacement a NAP is updated so as not to point to any defective block registered as an Unusable Cluster or Usable Cluster Type 2 in a DFL entry in the replacement region.

No. of Pages : 31 No. of Claims : 4

(12) PATENT APPLICATION PUBLICATION
(19) INDIA
(22) Date of filing of Application :04/09/2012
(21) Application No.7701/DELNP/2012 A
(43) Publication Date : 14/03/2014

(54) Title of the invention : HETEROCYCLIC AMIDES AS ROCK INHIBITORS

(51) International classification	:C07D213/75,C07D239/42,C07D471/04
(31) Priority Document No	:1003395.9
(32) Priority Date	:02/03/2010
(33) Name of priority country	:U.K.
(86) International Application No	:PCT/EP2011/053343
Filing Date	:04/03/2011
(87) International Publication No	:WO 2011/107608
(61) Patent of Addition to Application Number	:NA
Filing Date	:NA
(62) Divisional to Application Number	:NA
Filing Date	:NA

(71)**Name of Applicant :**
1)AMAKEM NV
Address of Applicant :Life Sciences Incubator Agoralaan A bis B 3590 Diepenbeek Belgium
(72)**Name of Inventor :**
1)LEYSEN Dirk
2)DEFERT Olivier
3)KAVAL Nadzeya
4)BLOM Petra
5)BOLAND Sandro

(57) Abstract :
The present invention relates to new kinase inhibitors of formula (I) more specifically ROCK inhibitors compositions in particular pharmaceuticals comprising such inhibitors and to uses of such inhibitors in the treatment and prophylaxis of disease. In particular the present invention relates to new ROCK inhibitors compositions in particular pharmaceuticals comprising such inhibitors and to uses of such inhibitors in the treatment and prophylaxis of disease. In addition the invention relates to methods of treatment and use of said compounds in the manufacture of a medicament for the application to a number of therapeutic indications including sexual dysfunction inflammatory diseases ophthalmic diseases and Respiratory diseases.

No. of Pages : 145 No. of Claims : 31

(12) PATENT APPLICATION PUBLICATION
(19) INDIA
(22) Date of filing of Application :04/09/2012
(21) Application No.7702/DELNP/2012 A
(43) Publication Date : 14/03/2014

(54) Title of the invention : SUBSTITUTED CYCLODEXTRIN DERIVATIVES AND PROCESS FOR THEIR PREPARATION

(51) International classification :C08B37/00
(31) Priority Document No :10157560.3
(32) Priority Date :24/03/2010
(33) Name of priority country :EPO
(86) International Application No :PCT/EP2011/054491
Filing Date :23/03/2011
(87) International Publication No :WO 2011/117317
(61) Patent of Addition to Application Number :NA
Filing Date :NA
(62) Divisional to Application Number :NA
Filing Date :NA

(71)**Name of Applicant :**
1)ARCARIOS BV
Address of Applicant :Dr. Molewaterplein 40 NL 3015 GB Rotterdam Netherlands
(72)**Name of Inventor :**
1)VAN CALENBERGH Serge
2)TOTI Kiran
3)DAMEN Eric Wilhelmus Petrus

(57) Abstract :
The present invention relates to substituted cyclodextrin derivatives which are particularly useful intermediates for producing well defined carboxyalkylated cyclodextrins in contrast with the poorly defined mixtures available through prior art procedures. The present invention also relates to processes for their preparation in a limited number of steps. These well defined carboxyalkylated cyclodextrins can be polysulfated according to procedures standard in the art and some of these polysulfates and alkali salts thereof have been found to exhibit biologically active properties especially for the treatment and/or prophylaxis of degenerative joint diseases (e.g. osteoarthritis) or heparin induced thrombocytopenia or for cartilage repair or connective tissue repair.

No. of Pages : 48 No. of Claims : 21

(12) PATENT APPLICATION PUBLICATION
(19) INDIA
(22) Date of filing of Application :04/09/2012
(21) Application No.7704/DELNP/2012 A
(43) Publication Date : 14/03/2014

(54) Title of the invention : ELECTRIC MOTOR

(51) International classification :H02K15/02,H02K5/173,H02K15/14
(31) Priority Document No :2010035408
(32) Priority Date :19/02/2010
(33) Name of priority country :Japan
(86) International Application No :PCT/JP2011/053541
Filing Date :18/02/2011
(87) International Publication No :WO 2011/102475
(61) Patent of Addition to Application Number :NA
Filing Date :NA
(62) Divisional to Application Number :NA
Filing Date :NA

(71)**Name of Applicant :**
1)KABUSHIKI KAISHA TOSHIBA
Address of Applicant :1 1 Shibaura 1 chome Minato ku Tokyo 1058001 Japan
(72)**Name of Inventor :**
1)YAGI Nobuyuki
2)MURAKAMI Satoru

(57) Abstract :
An electric motor comprises: a frame for supporting the stator; a bracket and an end plate which close both ends of the frame; a first bearing housing and a second bearing housing which respectively hold bearings and are respectively affixed to the bracket and the end plate from the outside of the electric motor; a rotor shaft which is disposed within the frame and is rotatably supported by the bearings; a rotor which is mounted to the rotor shaft and faces the stator; a first partition plate and a second partition plate which are mounted to the rotor shaft on both sides of the rotor and which respectively have support surfaces; and screw holes for affixation which are respectively provided to the bracket and the end plate so as to face the support surfaces and into which rotor securing bolts for pressing the support surfaces can be screwed from the outside of the electric motor.

No. of Pages : 44 No. of Claims : 9

(12) PATENT APPLICATION PUBLICATION
(19) INDIA
(22) Date of filing of Application :05/09/2012
(21) Application No.7733/DELNP/2012 A
(43) Publication Date : 14/03/2014

(54) Title of the invention : METHOD AND DEVICE FOR PRODUCING PRESSED ARTICLES

(51) International classification :C21B13/00
(31) Priority Document No :A350/2010
(32) Priority Date :04/03/2010
(33) Name of priority country :Austria
(86) International Application No :PCT/EP2011/052383
Filing Date :18/02/2011
(87) International Publication No :WO 2011/107349
(61) Patent of Addition to Application Number :NA
Filing Date :NA
(62) Divisional to Application Number :NA
Filing Date :NA

(71)**Name of Applicant :**
1)SIEMENS VAI METALS TECHNOLOGIES GMBH
Address of Applicant :Turmstrae 44 A 4031 Linz Austria
(72)**Name of Inventor :**
1)EDER Thomas
2)MILLNER Robert
3)PLAUL Jan Friedemann
4)REIN Norbert

(57) Abstract :
The invention relates to a method for producing pressed articles which contain direct reduced fine particulate iron (direct reduced iron DRI) from a fluidized bed reduction system (1) for direct reduction of fine particulate iron ore (2) wherein direct reduced fine particulate iron (DRI) produced in the fluidized bed reduction system (1) during direct reduction is compacted into pressed articles (8). The method is characterized in that dry fine particulate material containing at least fine particulate iron ore (2) and optionally fine particulate iron and carbon is admixed to the direct reduced fine particulate iron (DRI) and the mixture thus obtained is subsequently compacted into pressed articles (8). The invention further relates to a device for carrying out the method.

No. of Pages : 32 No. of Claims : 11

(12) PATENT APPLICATION PUBLICATION
(19) INDIA
(22) Date of filing of Application :05/09/2012
(21) Application No.7736/DELNP/2012 A
(43) Publication Date : 14/03/2014

(54) Title of the invention : SELECTIVE ENRICHMENT OF ANTIBODIES

(51) International classification :C07K14/31,C07K1/32
(31) Priority Document No :10155647.0
(32) Priority Date :05/03/2010
(33) Name of priority country :EPO
(86) International Application No :PCT/EP2011/053126
Filing Date :02/03/2011
(87) International Publication No :WO 2011/107518
(61) Patent of Addition to Application Number :NA
Filing Date :NA
(62) Divisional to Application Number :NA
Filing Date :NA

(71)**Name of Applicant :**
1)BOEHRINGER INGELHEIM INTERNATIONAL GMBH
Address of Applicant :Binger Str. 173 55216 Ingelheim Am Rhein Germany
(72)**Name of Inventor :**
1)AMBROSIUS Dorothee
2)DIETERLE Michael
3)DOBBERTHIEN Philine
4)HOYER Maria Katharina

(57) Abstract :
The invention relates to a method for the selective enrichment of immunoglobulins or other proteins containing an Fc domain (target protein) comprising the following steps: e. providing a solution that contains the target protein; f. introducing an Fc binding protein having exactly two binding sites under conditions that enable binding; g. separating the precipitate from the liquid phase; h. detaching the bond of the target protein from the Fc binding protein.

No. of Pages : 31 No. of Claims : 10

(12) PATENT APPLICATION PUBLICATION
(19) INDIA
(22) Date of filing of Application :05/09/2012
(21) Application No.7737/DELNP/2012 A
(43) Publication Date : 14/03/2014

(54) Title of the invention : INK PASSAGEWAYS CONNECTING INLET PORTS AND CHAMBERS

(51) International classification :B41J2/175
(31) Priority Document No :12/750752
(32) Priority Date :31/03/2010
(33) Name of priority country :U.S.A.
(86) International Application No :PCT/US2011/030303
Filing Date :29/03/2011
(87) International Publication No :WO 2011/123434
(61) Patent of Addition to Application Number :NA
Filing Date :NA
(62) Divisional to Application Number :NA
Filing Date :NA

(71)**Name of Applicant :**
1)EASTMAN KODAK COMPANY
Address of Applicant :343 State Street Rochester NY 14650 2201 U.S.A.
(72)**Name of Inventor :**
1)MURRAY Richard A.

(57) Abstract :
A printhead frame for an inkjet printhead assembly the printhead frame includes a holding receptacle for at least one replaceable ink tank the holding receptacle including a plurality of ink inlet ports disposed on a first wall; a plurality of ink chambers corresponding to the plurality of ink inlet ports wherein at least a first ink chamber is adjacent the first wall and is directly opposite a first ink inlet port a second ink chamber is not adjacent the first wall and the first wall includes a first hole to fluidly connect the first ink inlet port and the first ink chamber; and a second wall adjoining the first wall and forming a part of the second ink chamber the second wall including a first groove; wherein the first wall includes a second hole to fluidly connect a second ink inlet port and the first groove; and wherein the second wall includes a first hole to fluidly connect the second ink chamber and the first groove.

No. of Pages : 33 No. of Claims : 18

(12) PATENT APPLICATION PUBLICATION
(19) INDIA
(22) Date of filing of Application :05/09/2012
(21) Application No.7738/DELNP/2012 A
(43) Publication Date : 14/03/2014

(54) Title of the invention : METHODS OF PRODUCING HIGH TITER HIGH PURITY VIRUS STOCKS AND METHODS OF USE THEREOF

(51) International classification :C12N7/02,C12Q1/70
(31) Priority Document No :61/324220
(32) Priority Date :14/04/2010
(33) Name of priority country :U.S.A.
(86) International Application No :PCT/US2011/031747
Filing Date :08/04/2011
(87) International Publication No :WO 2011/130119
(61) Patent of Addition to Application Number :NA
Filing Date :NA
(62) Divisional to Application Number :NA
Filing Date :NA

(71)**Name of Applicant :**
1)EMD MILLIPORE CORPORATION
Address of Applicant :290 Concord Road Billerica MA 01821 U.S.A.
(72)**Name of Inventor :**
1)ASHER Damon R.
2)KATZ Amanda B.
3)KHAN Navid Z.
4)MEHTA Ushma

(57) Abstract :
The purity and titer of virus stocks used for virus clearance studies have a significant influence on study outcome and impact how well the scale down model represents the production scale process. Impurities in virus stocks are particularly important in the testing of small virus retentive filters because these impurities may cause a filter to foul prematurely leading to underestimation of the true throughput capability of the filter and consequent inappropriate sizing of the production scale unit. In addition impurities can also affect the levels of virus clearance observed by altering the fouling mechanisms and subsequent fluid passage through the virus filter. Described herein are methods for making producing and using high purity virus stocks having high titer.

No. of Pages : 52 No. of Claims : 39

(12) PATENT APPLICATION PUBLICATION
(19) INDIA
(22) Date of filing of Application :05/09/2012
(21) Application No.7752/DELNP/2012 A
(43) Publication Date : 14/03/2014

(54) Title of the invention : MULTISTAGE CLUSTER PLATE MILL

(51) International classification :B21B13/14,B21B31/02
(31) Priority Document No :2010042433
(32) Priority Date :26/02/2010
(33) Name of priority country :Japan
(86) International Application No :PCT/JP2011/053795
Filing Date :22/02/2011
(87) International Publication No :WO 2011/105354
(61) Patent of Addition to Application Number :NA
Filing Date :NA
(62) Divisional to Application Number :NA
Filing Date :NA

(71)**Name of Applicant :**
1)IHI Corporation
Address of Applicant :1 1 Toyosu 3 chome Koto ku Tokyo 1358710 Japan
2)IHI METALTECH CO. LTD.
(72)**Name of Inventor :**
1)ISHII Hajime
2)SATO Hisashi
3)HONJOU Hisashi
4)MATSUZAWA Tsukasa
5)MATSUMURA Hideo

(57) Abstract :
Disclosed is a multistage cluster plate mill (1) formed by facing cluster constructions (10). The cluster constructions (10) are provided with auxiliary roller axle boxes (12) central auxiliary roller axle boxes (13) beams (16) first rolling devices (19) and second rolling devices (20). The roller axle boxes (12) jointly support the first rollers (5) and second rollers (6). The central auxiliary roller axle boxes (13) are equipped independently from the auxiliary roller axle boxes (12) and support the central auxiliary roller (7). The beams (16) support the central auxiliary roller axle boxes (13) and are slideable in opposite directions together with the central auxiliary axle boxes (13). The first rolling devices (19) support the beams (16) and also slide the beams (16) and roll the central auxiliary roller axle boxes (13) in a vertical direction. The second rolling devices (20) support the auxiliary roller axle boxes (12) equipped in the beams (16) and also allow the auxiliary roller axle boxes (12) which are independent of the central auxiliary roller axle boxes (13) to slide and roll in a vertical direction.

No. of Pages : 28 No. of Claims : 6

(12) PATENT APPLICATION PUBLICATION
(19) INDIA
(22) Date of filing of Application :05/09/2012
(21) Application No.7753/DELNP/2012 A
(43) Publication Date : 14/03/2014

(54) Title of the invention : ROLLER FOR IN FURNACE CONVEYANCE

(51) International classification :C21D1/00,F27B9/24
(31) Priority Document No :2010042432
(32) Priority Date :26/02/2010
(33) Name of priority country :Japan
(86) International Application No :PCT/JP2011/053519
Filing Date :18/02/2011
(87) International Publication No :WO 2011/105298
(61) Patent of Addition to Application Number :NA
Filing Date :NA
(62) Divisional to Application Number :NA
Filing Date :NA

(71)**Name of Applicant :**
1)IHI Corporation
Address of Applicant :1 1 Toyosu 3 chome Koto ku Tokyo 1358710 Japan
2)IHI METALTECH CO. LTD.
(72)**Name of Inventor :**
1)YAMAOKA Hiroto
2)YAMASHITA Yoichi
3)YONEYAMA Natsuki
4)KUCHI Masahiro
5)HONJOU Hisashi

(57) Abstract :
A roller (1) for in furnace conveyance is provided with engagement sections (30) at each of which an engagement hole (11) of a barrel section (10) and an engagement shaft (24) of a shaft section (20) are engaged with each other and the roller is formed as a single roller by welding the engagement sections (30). The engagement sections are each provided with: a first engagement section (31) at which the engagement hole (11) and the engagement shaft (24) are engaged with each other at a position separated from the position of the weld with a predetermined gap provided therebetween; and a second engagement section (32) at which the engagement hole (11) and the engagement shaft (24) are engaged with each other at a position adjacent to the position of the weld with a gap provided therebetween the gap being greater than that of the first engagement section.

No. of Pages : 27 No. of Claims : 6

(12) PATENT APPLICATION PUBLICATION
(19) INDIA
(22) Date of filing of Application :05/09/2012
(21) Application No.7754/DELNP/2012 A
(43) Publication Date : 14/03/2014

(54) Title of the invention : EPOXIDE BASED FIXING MORTAR HAVING SILANE ADDITIONS

(51) International classification :C04B26/14,C04B28/02,C04B28/04
(31) Priority Document No :10 2010 015 981.6
(32) Priority Date :16/03/2010
(33) Name of priority country :Germany
(86) International Application No :PCT/EP2011/001016
Filing Date :02/03/2011
(87) International Publication No :WO 2011/113533
(61) Patent of Addition to Application Number :NA
Filing Date :NA
(62) Divisional to Application Number :NA
Filing Date :NA

(71)**Name of Applicant :**
1)FISCHERWERKE GMBH & CO. KG
Address of Applicant :Weinhalde 14 18 72178 Waldachtal Germany
(72)**Name of Inventor :**
1)GRN J¼rgen
2)VOGEL Martin
3)SCHMIDT Clemens
4)SCHLENK Christian

(57) Abstract :
The invention relates to a fixing mortar system on the basis of one or more epoxide based curing reactive resins for mortaring anchoring means in holes or gaps characterised in that said system contains silanes which do or do not contain reactive groups capable of participating in the polymerisation with a synthetic resin on the basis of the epoxide based curing reactive resin or resins and which in any case contain Si bonded hydrolysable groups. The invention also relates to related inventive subjects such as methods kits and uses.

No. of Pages : 33 No. of Claims : 17

(12) PATENT APPLICATION PUBLICATION
(19) INDIA
(22) Date of filing of Application :05/09/2012
(21) Application No.7756/DELNP/2012 A
(43) Publication Date : 14/03/2014

(54) Title of the invention : SYSTEM FOR SURVEILLANCE OF AN AREA WITHIN WHICH PEOPLE MOVE

(51) International classification :G01N21/05,G01N21/35,G08B21/14
(31) Priority Document No :TO2010A000170
(32) Priority Date :05/03/2010
(33) Name of priority country :Italy
(86) International Application No :PCT/IB2011/000460
Filing Date :04/03/2011
(87) International Publication No :WO 2011/107868
(61) Patent of Addition to Application Number :NA
Filing Date :NA
(62) Divisional to Application Number :NA
Filing Date :NA

(71)**Name of Applicant :**
1)FINMECCANICA SOCIETA PER AZIONI
Address of Applicant :Piazza Monte Grappa 4 I Roma Italy
(72)**Name of Inventor :**
1)VIOLA Roberto
2)MENGALI Sandro
3)LIBERATORE Nicola
4)PIERNO Luigi

(57) Abstract :
A system for surveillance of a delimited area within which people move wherein at least one hollow optical fibre (10) is configured for extending through the area (2) and is provided throughout its length with a plurality of holes (12) that set an internal channel (11) of the fibre in communication with the outside of the fibre itself. There is provided an optical source (20) configured for supplying the optical signal to one end of the hollow optical fibre (10) and a sensor (24) designed to detect at one end of the hollow optical fibre the optical signal transmitted throughout the length of the fibre itself. A processing unit (30) is configured for examining the spectrum of the optical signal detected by the sensors (24) in order to detect the presence of toxic agents present in the area and drawn into said channel (11).

No. of Pages : 14 No. of Claims : 4

(12) PATENT APPLICATION PUBLICATION
(19) INDIA
(22) Date of filing of Application :06/09/2012
(21) Application No.7773/DELNP/2012 A
(43) Publication Date : 14/03/2014

(54) Title of the invention : PREPARATION OF STABILISED X RAY DIAGNOSTIC COMPOSITION

(51) International classification :A61K49/04
(31) Priority Document No :10157336.8
(32) Priority Date :23/03/2010
(33) Name of priority country :EPO
(86) International Application No :PCT/EP2011/054341
Filing Date :22/03/2011
(87) International Publication No :WO 2011/117236
(61) Patent of Addition to Application Number :NA
Filing Date :NA
(62) Divisional to Application Number :NA
Filing Date :NA

(71)**Name of Applicant :**
1)GE HEALTHCARE AS
Address of Applicant :Nycoveien 1 2 P.O. Box 4220 Nydalen N 0401 Oslo Norway
(72)**Name of Inventor :**
1)GL˜G…RD Christian
2)VELD Dirk Jan int

(57) Abstract :
The invention relates to a process for the preparation of a diagnostic X ray composition. The composition comprises a non ionic X ray contrast agent in a pharmaceutically acceptable carrier. More particularly the invention relates to a process for secondary production of X ray compositions comprising X ray contrast agents with a high dissolution temperature. When using the process of the invention precipitation is avoided and degradation of the contrast agent is reduced. The process of the invention includes heat treatment of iodinated X ray contrast agents at low pH.

No. of Pages : 25 No. of Claims : 14

(12) PATENT APPLICATION PUBLICATION
(19) INDIA
(22) Date of filing of Application :06/09/2012
(21) Application No.7774/DELNP/2012 A
(43) Publication Date : 14/03/2014

(54) Title of the invention : METHODS AND APPARATUS FOR SYNTHESIZING IMAGING AGENTS AND INTERMEDIATES THEREOF

(51) International classification :C07D237/14
(31) Priority Document No :61/302,477
(32) Priority Date :08/02/2010
(33) Name of priority country :U.S.A.
(86) International Application No :PCT/US2011/024109
Filing Date :08/02/2011
(87) International Publication No :WO 2011/097649
(61) Patent of Addition to Application Number :NA
Filing Date :NA
(62) Divisional to Application Number :NA
Filing Date :NA

(71)**Name of Applicant :**
1)LANTHEUS MEDICAL IMAGING INC.
Address of Applicant :331 Treble Cove Road North Billerica MA 01862 U.S.A.
(72)**Name of Inventor :**
1)CESATI Richard R.
2)CHEESMAN Edward H.
3)LAZEWATSKY Joel
4)RADEKE Heike S.
5)CASTNER James F.
6)MONGEAU Enrico
7)ZDANKIEWICZ Dianne D.
8)SIEGLER Robert Wilburn
9)DEVINE Marybeth

(57) Abstract :
The present invention generally relates to methods and system for the synthesis of imaging agents and precursors thereof. The methods may exhibit improved yields and may allow for the large scale synthesis of imaging agents including imaging agents comprising a radioisotope (e.g. , 1□ F). Various embodiments of the invention may be useful as sensors diagnostic tools and the like. In some cases methods for evaluating perfusion including myocardial perfusion are provided. Synthetic methods of the invention have also been incorporated into an automated synthesis unit to prepare and purify imaging agents that comprise a radioisotope. In some embodiments the present invention provides a novel methods and systems comprising imaging agent 1 including methods of imaging in a subject comprising administering a composition comprising imaging agent 1 to a subject by injection infusion or any other known method and imaging the area of the subject wherein the event of interest is located.

No. of Pages : 217 No. of Claims : 163

(12) PATENT APPLICATION PUBLICATION
(19) INDIA
(22) Date of filing of Application :06/09/2012
(21) Application No.7775/DELNP/2012 A
(43) Publication Date : 14/03/2014

(54) Title of the invention : FOLDABLE UTILITY TRAILER

(51) International classification :B62D63/06,B60P3/42,B62B3/02
(31) Priority Document No :2692168
(32) Priority Date :23/02/2010
(33) Name of priority country :Canada
(86) International Application No :PCT/CA2010/001879
Filing Date :25/11/2010
(87) International Publication No :WO 2011/103655
(61) Patent of Addition to Application Number :NA
Filing Date :NA
(62) Divisional to Application Number :NA
Filing Date :NA

(71)**Name of Applicant :**
1)INCA INDUSTRIES INC.
Address of Applicant :627 Lyons Lane Suite 300 Oakville Ontario L8J 5Z7 U.S.A.
(72)**Name of Inventor :**
1)ALVARINO Leonardo E.

(57) Abstract :
A collapsible foldable utility trailer for the transportation and/or storage of objects the trailer comprising a supporting chassis frame; suspension means for supporting the chassis frame; bed means retained upon the chassis frame for receiving the objects and comprising a plurality of bed sections comprising (a) a first bed section having i) a first planar bed member for receiving an object thereupon; ii) a pair of opposing first bed side walls mounted on the first bed member; (b) a second bed section having i) a second planar bed member for receiving an object thereupon; ii) a pair of opposing second bed side walls mounted on the second bed member; iii) a second bed end wall mounted to the second bed member between the pair of opposing second bed side walls; wherein the second planar bed member is hingedly connected between the pair of opposing second bed side walls to the first planar bed member between the pair of opposing first bed side walls to allow 90° rotation of the second bed section to effect abutment with the first bed section. A large folding trailer that can be used at full size or be folded to be used as a short trailer as well as be folded again to store in a compressed configuration and in this configuration it is still possible to be used for storage.

No. of Pages : 15 No. of Claims : 16

(12) PATENT APPLICATION PUBLICATION
(19) INDIA
(22) Date of filing of Application :06/09/2012
(21) Application No.7776/DELNP/2012 A
(43) Publication Date : 14/03/2014

(54) Title of the invention : LOADING DEVICE

(51) International classification :A61G3/00,B60P3/12
(31) Priority Document No :61/306756
(32) Priority Date :22/02/2010
(33) Name of priority country :U.S.A.
(86) International Application No :PCT/US2011/025659
Filing Date :22/02/2011
(87) International Publication No :WO 2011/103545
(61) Patent of Addition to Application Number :NA
Filing Date :NA
(62) Divisional to Application Number :NA
Filing Date :NA

(71)**Name of Applicant :**
1)AM GENERAL LLC
Address of Applicant :105 N. Niles Avenue South Bend IN 46617 U.S.A.
(72)**Name of Inventor :**
1)NIMS Charles E.
2)DYBOWSKI Arthur D.

(57) Abstract :
A loading device for incorporation into a vehicle such as an ambulance for loading and unloading a stretcher. The loading device has a retracted configuration and an extended configuration. The loading device being predisposed to the extended configuration. The loading device may include a hoist assembly to counteract the predisposition to the extended position and move the loading device to the retracted configuration.

No. of Pages : 33 No. of Claims : 18

(12) PATENT APPLICATION PUBLICATION
(19) INDIA
(22) Date of filing of Application :04/09/2012
(21) Application No.7672/DELNP/2012 A
(43) Publication Date : 14/03/2014

(54) Title of the invention : USE OF MELOXICAM FOR THE LONG TERM TREATMENT OF KIDNEY DISORDERS IN CATS

(51) International classification :A61K31/5415,A61P13/12
(31) Priority Document No :10155400.4
(32) Priority Date :03/03/2010
(33) Name of priority country :EPO
(86) International Application No :PCT/EP2011/053072
Filing Date :02/03/2011
(87) International Publication No :WO 2011/107498
(61) Patent of Addition to Application Number :NA
Filing Date :NA
(62) Divisional to Application Number :NA
Filing Date :NA

(71)**Name of Applicant :**
1)BOEHRINGER INGELHEIM VETMEDICA GMBH
Address of Applicant :Binger Strae 173 55216 Ingelheim am Rhein Germany
(72)**Name of Inventor :**
1)JOHNSTON Laura

(57) Abstract :
The invention is directed to a formulation containing NSAIDs or a pharmacologically acceptable salt thereof of and one or more vehicles for the treatment of kidney diseases in cats. Serum creatinine concentrations increase less over time following treatment with NSAID compared to untreated cats.

No. of Pages : 22 No. of Claims : 12

(12) PATENT APPLICATION PUBLICATION
(19) INDIA
(22) Date of filing of Application :04/09/2012
(21) Application No.7673/DELNP/2012 A
(43) Publication Date : 14/03/2014

(54) Title of the invention : THICKENER GREASE METHOD FOR PRODUCING THICKENER METHOD FOR PRODUCING GREASE AND GREASED BEARING

(51) International classification	:C10M115/08,F16C19/06,F16C33/66
(31) Priority Document No	:2010033959
(32) Priority Date	:18/02/2010
(33) Name of priority country	:Japan
(86) International Application No	:PCT/JP2011/053445
Filing Date	:18/02/2011
(87) International Publication No	:WO 2011/102441
(61) Patent of Addition to Application Number	:NA
Filing Date	:NA
(62) Divisional to Application Number	:NA
Filing Date	:NA

(71)**Name of Applicant :**
1)NTN CORPORATION
Address of Applicant :3 17 Kyomachibori 1 chome Nishi ku Osaka shi Osaka 5500003 Japan
(72)**Name of Inventor :**
1)KAWAMURA Takayuki

(57) Abstract :
Provided are a thickener with which it is possible to produce a grease having superior high temperature and high speed durability a grease containing the thickener a method for producing the thickener a method for producing the grease and a greased bearing in which the grease is sealed. A grease (7) sealed in a greased bearing (1) is obtained by adding a thickener containing the compound represented by formula (1) or formula (2) to a base oil. In formulas (1) and (2) R1 is a residue of a diamine or diisocyanate; R2 is a residue of a dicarboxylic acid wherein two adjacent carbon atoms form an imide ring or a derivative thereof; R3 is a residue of a tetracarboxylic acid or derivative thereof; R4 is a hydrogen atom or residue of a monoamine or a monoisocyanate; and n is an integer of 0 to 5.

No. of Pages : 50 No. of Claims : 18

(12) PATENT APPLICATION PUBLICATION
(19) INDIA
(22) Date of filing of Application :06/09/2012
(21) Application No.7788/DELNP/2012 A
(43) Publication Date : 14/03/2014

(54) Title of the invention : ARRANGEMENT HAVING AT LEAST TWO COILS WHICH ARE ARRANGED AXIALLY ONE ABOVE THE OTHER ON A COMMON CORE LIMB

(51) International classification :H01F27/32
(31) Priority Document No :10 003 059.2
(32) Priority Date :23/03/2010
(33) Name of priority country :EPO
(86) International Application No :PCT/EP2011/001155
Filing Date :09/03/2011
(87) International Publication No :WO 2011/116884
(61) Patent of Addition to Application Number :NA
Filing Date :NA
(62) Divisional to Application Number :NA
Filing Date :NA

(71)**Name of Applicant :**
1)ABB TECHNOLOGY AG
Address of Applicant :Affolternstr. 44 CH 8050 Z¼rich Switzerland
(72)**Name of Inventor :**
1)WEBER Benjamin
2)PATEL Bhavesh
3)ESENLIK Burak
4)CORNELIUS Frank
5)BOCKHOLT Marcos
6)TEPPER Jens

(57) Abstract :
An arrangement is proposed having at least two coils (1 4) which are arranged axially one above the other on a common core limb (7) wherein each coil has at least two windings (2 3 5 6) which are arranged radially one above the other and barriers are provided between the windings (2 3 5 6). The barriers (9 13 15 19) of adjacent coils (1 4) are arranged radially offset with respect to one another and the edge areas of the barriers (9 13 15 19) engage in one another like a comb. Alternatively the barriers (21 25 27 31) of the mutually directly opposite areas of adjacent coils (1 4) are alternately shortened and lengthened such that a shortened barrier (21 23 25) of one coil (1) is always opposite a lengthened barrier (27 29 31) of the other coil (4) and conversely a lengthened barrier (22 24) of one coil (1) is opposite a shortened barrier (28 30) of the other coil (4) and a shortened barrier follows a lengthened barrier in each coil (1 4). Alternatively some of the barriers are in the form of isolation rings (34/35 38/39 43/44 47/48) which additionally engage around the end surfaces of the windings (2 3 5 6) which end surfaces are arranged at right angles to the winding axis (W).

No. of Pages : 19 No. of Claims : 6

(12) PATENT APPLICATION PUBLICATION
(19) INDIA
(22) Date of filing of Application :06/09/2012
(21) Application No.7789/DELNP/2012 A
(43) Publication Date : 14/03/2014

(54) Title of the invention : METHOD FOR LINKING AND LOADING TO PROTECT APPLICATIONS

(51) International classification :G06F9/44,G06F21/22,G06F7/58
(31) Priority Document No :NA
(32) Priority Date :NA
(33) Name of priority country :NA
(86) International Application No :PCT/CA2010/000450
Filing Date :31/03/2010
(87) International Publication No:WO 2011/120122
(61) Patent of Addition to Application Number :NA
Filing Date :NA
(62) Divisional to Application Number :NA
Filing Date :NA

(71)**Name of Applicant :**
1)IRDETO CANADA CORPORATION
Address of Applicant :2500 Solandt Road Suite 300 Ottawa Ontario K2K 3G5 Canada
(72)**Name of Inventor :**
1)GOODES Grant Stewart
2)LIEM Clifford

(57) Abstract :
A linker or loader and associated method is described whereby the application of security transformations to object code modules can be deferred until link or load time through for example memory relocation selection from diverse instances of a module and late binding of constants. This provides several benefits over conventional source to source security transformations. These deferred security transformations can be applied in a very light weight manner and create many opportunities for diversity in the resulting executable program enhancing security while at the same time minimizing the impact on execution performance and correctness and reducing the complexity of debugging.

No. of Pages : 27 No. of Claims : 27

(12) PATENT APPLICATION PUBLICATION
(19) INDIA
(22) Date of filing of Application :06/09/2012
(21) Application No.7782/DELNP/2012 A
(43) Publication Date : 14/03/2014

(54) Title of the invention : PRINTED SORBENTS

(51) International classification :B01J20/28,B65D81/26,C09D11/00
(31) Priority Document No :12/711995
(32) Priority Date :24/02/2010
(33) Name of priority country :U.S.A.
(86) International Application No :PCT/US2010/054033
Filing Date :26/10/2010
(87) International Publication No :WO 2011/106041
(61) Patent of Addition to Application Number :NA
Filing Date :NA
(62) Divisional to Application Number :NA
Filing Date :NA

(71)**Name of Applicant :**
1)MULTISORB TECHNOLOGIES INC.
Address of Applicant :325 Harlem Road Buffalo New York 14224 1893 U.S.A.
(72)**Name of Inventor :**
1)PERRY David J
2)SHERRY John M.

(57) Abstract :
The invention generally relates to an absorbent article comprising an absorbent having printed indicia thereon wherein the printing comprises colorant and resin and a protective coating over the printing.

No. of Pages : 10 No. of Claims : 19

(12) PATENT APPLICATION PUBLICATION
(19) INDIA
(22) Date of filing of Application :06/09/2012
(21) Application No.7783/DELNP/2012 A
(43) Publication Date : 14/03/2014

(54) Title of the invention : 5 NORBORNENE 2 SPIRO CYCLOALKANONE SPIRO 2 5 NORBORNENE AND METHOD FOR PRODUCING SAME

(51) International classification	:C07C49/643,C07C45/68,C07C45/80
(31) Priority Document No	:2010026953
(32) Priority Date	:09/02/2010
(33) Name of priority country	:Japan
(86) International Application No	:PCT/JP2011/052738
Filing Date	:09/02/2011
(87) International Publication No	:WO 2011/099517
(61) Patent of Addition to Application Number	:NA
Filing Date	:NA
(62) Divisional to Application Number	:NA
Filing Date	:NA

(71)**Name of Applicant :**
1)JX Nippon Oil & Energy Corporation
Address of Applicant :6 3 Otemachi 2 chome Chiyoda ku Tokyo 1008162 Japan
(72)**Name of Inventor :**
1)KOMATSU Shinichi
2)ADACHI Michiaki

(57) Abstract :
Disclosed is a 5 norbornene 2 spiro a cycloalkanone a spiro 2 5 norbornene represented by general formula (1) wherein R R and R each independently represent a hydrogen atom or the like and n represents an integer of 0 to 12.

No. of Pages : 76 No. of Claims : 9

(12) PATENT APPLICATION PUBLICATION
(19) INDIA
(22) Date of filing of Application :06/09/2012
(21) Application No.7784/DELNP/2012 A
(43) Publication Date : 14/03/2014

(54) Title of the invention : APPARATUS FOR CHARGING RAW MATERIAL IN SINTERING MACHINE

(51) International classification :F27B21/10
(31) Priority Document No :2010-056348
(32) Priority Date :12/03/2010
(33) Name of priority country :Japan
(86) International Application No :PCT/JP2011/055494
Filing Date :09/03/2011
(87) International Publication No :WO 2011/111735
(61) Patent of Addition to Application Number :NA
Filing Date :NA
(62) Divisional to Application Number :NA
Filing Date :NA

(71)**Name of Applicant :**
1)NIPPON STEEL & SUMITOMO METAL CORPORATION
Address of Applicant :6 -1 Marunouchi 2- chome, Chiyoda-ku, Tokyo 100-8071, JAPAN
(72)**Name of Inventor :**
1)FUKAKURA Yuji
2)TSUBONE Yohei
3)SHINOHARA Takashi
4)SAITO Michinobu

(57) Abstract :
Provided is an apparatus for charging a sintering raw material said apparatus comprising: a chute which charges the sintering raw material to a palette; and a scraper which moves back and forth on the chute and removes from the chute the sintering raw material that has accumulated on the chute. The scraper comprises: an inclined plate which is provided inclined with respect to the top surface of the chute; a scraping tool which is attached to the front end at the bottom surface side of the inclined plate; a support frame which supports the inclined plate; and a roller device which is attached to the support frame and causes the inclined plate and the support frame to travel on the top surface of the chute. The width dimension of the chute is at least substantially equal to the width dimension of the inclined plate.

No. of Pages : 36 No. of Claims : 9

(12) PATENT APPLICATION PUBLICATION
(19) INDIA
(22) Date of filing of Application :06/09/2012
(21) Application No.7785/DELNP/2012 A
(43) Publication Date : 14/03/2014

(54) Title of the invention : CURRENT VOLTAGE CONVERTER HAVING A CURRENT REFLECTOR INPUT STAGE OF AN AMPLIFIER AND CORRESPONDING AMPLIFIER

(51) International classification :H03F1/08,H03F1/30,H03F1/32
(31) Priority Document No :10 51514
(32) Priority Date :03/03/2010
(33) Name of priority country :France
(86) International Application No :PCT/FR2010/050473
Filing Date :16/03/2010
(87) International Publication No :WO 2011/107671
(61) Patent of Addition to Application Number :NA
Filing Date :NA
(62) Divisional to Application Number :NA
Filing Date :NA

(71)**Name of Applicant :**
1)DEVIALET
Address of Applicant :10 place Vend´me F 75001 Paris France
(72)**Name of Inventor :**
1)MORONVALLE Mathias
2)CALMEL Pierre Emmanuel

(57) Abstract :
The invention relates to a current voltage converter (22) having a current reflector the input current comprising a fixed component and a variable component which comprises: an input (24) for the current to be converted; an output (26) for the converted voltage; a current to voltage conversion resistor (36) arranged between the output (26) and ground the input (24) being connected to the output (26) for circulating the current to be converted in the resistor (36); and a current reflector circuit (38) comprising two constant current sources (40 42) each connected between the output (26) and a respective reference voltage (32 34). Said converter (22) also has a cascade stage (44 46) connected in series to each constant current generator (40 42) to bring about a constant difference in potential at the terminals of each constant current generator (40 42) regardless of the output voltage.

No. of Pages : 18 No. of Claims : 13

(12) PATENT APPLICATION PUBLICATION
(19) INDIA
(22) Date of filing of Application :06/09/2012
(21) Application No.7787/DELNP/2012 A
(43) Publication Date : 14/03/2014

(54) Title of the invention : VERY HIGH FIDELITY AUDIO AMPLIFIER

(51) International classification :H03F3/68
(31) Priority Document No :1051516
(32) Priority Date :02/03/2010
(33) Name of priority country :France
(86) International Application No :PCT/FR2010/050469
Filing Date :16/03/2010
(87) International Publication No :WO 2011/107669
(61) Patent of Addition to Application Number :NA
Filing Date :NA
(62) Divisional to Application Number :NA
Filing Date :NA

(71)**Name of Applicant :**
1)DEVIALET
Address of Applicant :10 place Vend´me F 75001 Paris France
(72)**Name of Inventor :**
1)CALMEL Pierre Emmanuel
2)MORONVALLE Mathias

(57) Abstract :
The invention relates to a high fidelity audio amplifier having very low distortion and high efficiency (10) comprising: an input (12) for an audio signal to be amplified and an output (14) for feeding a load (16) with the amplified audio signal; a reference voltage generator (18) with high linearity and low output impedance suitable for receiving as an input the musical signal to be amplified; a power voltage generator (20) the output of which is connected to the output of the reference voltage generator (18) through a coupling impedance (22) the modulus of which is at least 10 times lower than the modulus of the impedance of the load (16) suitable for being fed by the output (14) of the amplifier; and means (28A 28B 30 32) for inputting at the input of the power voltage generator (20) a signal representing the current supplied at the output by the reference voltage generator (18). The means (28A 28B 30 32) for inputting at the input of the power voltage generator (20) a signal representing the current supplied at the output by the reference voltage generator (18) comprise a proportional integral derivative controller (32).

No. of Pages : 10 No. of Claims : 9

(12) PATENT APPLICATION PUBLICATION
(19) INDIA
(22) Date of filing of Application :04/09/2012
(21) Application No.7679/DELNP/2012 A
(43) Publication Date : 14/03/2014

(54) Title of the invention : EXTERNAL SKIN PREPARATION

(51) International classification :A61K8/34,A61Q19/02
(31) Priority Document No :2010089775
(32) Priority Date :08/04/2010
(33) Name of priority country :Japan
(86) International Application No :PCT/JP2011/058854
Filing Date :07/04/2011
(87) International Publication No :WO 2011/126098
(61) Patent of Addition to Application Number :NA
Filing Date :NA
(62) Divisional to Application Number :NA
Filing Date :NA

(71)**Name of Applicant :**
1)KAO CORPORATION
Address of Applicant :14 10 Nihonbashi Kayabacho 1 chome Chuo ku Tokyo 1038210 Japan
(72)**Name of Inventor :**
1)SATOU Kouji
2)SASAKI Minoru

(57) Abstract :
By searching for a compound having good whitening effect high stability a good interaction with a base for external preparations and so on an external skin preparation comprising said compound is provided. The external skin preparation comprises a compound represented by general formula (1) [wherein R represents an alkyl group having 1 8 carbon atoms].

No. of Pages : 50 No. of Claims : 30

(12) PATENT APPLICATION PUBLICATION
(19) INDIA
(22) Date of filing of Application :06/09/2012
(21) Application No.7791/DELNP/2012 A
(43) Publication Date : 14/03/2014

(54) Title of the invention : A SYSTEM AND METHOD FOR ENCAPSULATING AND ENABLING PROTECTION THROUGH DIVERSE VARIATIONS IN SOFTWARE LIBRARIES

(51) International classification :G06F9/44,G06F21/22,G06F9/45
(31) Priority Document No :NA
(32) Priority Date :NA
(33) Name of priority country :NA
(86) International Application No :PCT/CA2010/000451
Filing Date :31/03/2010
(87) International Publication No:WO 2011/120123
(61) Patent of Addition to Application Number :NA
Filing Date :NA
(62) Divisional to Application Number :NA
Filing Date :NA

(71)**Name of Applicant :**
1)IRDETO CANADA CORPORATION
Address of Applicant :2500 Solandt Road Suite 300 Ottawa Ontario K2K 3G5 Canada
(72)**Name of Inventor :**
1)GOODES Grant Stewart
2)LIEM Clifford

(57) Abstract :
A flexible software library in which the software modules are defined as an abstract intermediate representation. The flexible library allows security transformation and performance attribute selections to be made by the end user rather than the library creator. Furthermore since the flexible library contains an abstract representation of the software modules the library can also be provisioned to contain an arbitrary number of named instances representing specific sets of values for security and performance decisions along with the corresponding native object code resulting from those decisions. This permits distribution of software modules in a completely platform independent manner while avoiding the disclosure of proprietary information such as source files.

No. of Pages : 25 No. of Claims : 36

(12) PATENT APPLICATION PUBLICATION
(19) INDIA
(22) Date of filing of Application :06/09/2012
(21) Application No.7792/DELNP/2012 A
(43) Publication Date : 14/03/2014

(54) Title of the invention : SYSTEM AND METHOD FOR DYNAMIC VARIABLY TIMED OPERATION PATHS AS A RESISTANCE TO SIDE CHANNEL AND REPEATED INVOCATION ATTACKS

(51) International classification :G06F21/22
(31) Priority Document No :NA
(32) Priority Date :NA
(33) Name of priority country :NA
(86) International Application No :PCT/CA2010/000409
Filing Date :25/03/2010
(87) International Publication No :WO 2011/116448
(61) Patent of Addition to Application Number :NA
Filing Date :NA
(62) Divisional to Application Number :NA
Filing Date :NA

(71)**Name of Applicant :**
1)IRDETO CANADA CORPORATION
Address of Applicant :2500 Solandt Road Suite 300 Ottawa Ontario K2K 3G5 Canada
(72)**Name of Inventor :**
1)LIEM Clifford
2)NAHAS Carlos

(57) Abstract :
A system and method for constructing variably timed operation paths and applying those paths to any algorithm. In particular the system and method may be applied to cryptography algorithms as a means to resist side channel repeated invocation and any similar attacks based on the physical characteristics of a system for a given software implementation. The method has the benefit of being generally applicable to any algorithm and has the ability to constrain performance to known timing windows.

No. of Pages : 39 No. of Claims : 30

(12) PATENT APPLICATION PUBLICATION
(19) INDIA
(22) Date of filing of Application :06/09/2012
(21) Application No.7793/DELNP/2012 A
(43) Publication Date : 14/03/2014

(54) Title of the invention : METHODS AND APPARATUSES FOR PREDICTING THE EFFECTS OF ERYTHROPOESIS STIMULATING AGENTS (ESA) AND FOR DETERMINING A DOSE TO BE ADMINISTERED

(51) International classification :G01N33/49,G01N33/72
(31) Priority Document No :10003050.1
(32) Priority Date :23/03/2010
(33) Name of priority country :EPO
(86) International Application No :PCT/EP2011/001387
Filing Date :21/03/2011
(87) International Publication No :WO 2011/116919
(61) Patent of Addition to Application Number :NA
Filing Date :NA
(62) Divisional to Application Number :NA
Filing Date :NA

(71)**Name of Applicant :**
1)FRESENIUS MEDICAL CARE DEUTSCHLAND GMBH
Address of Applicant :Else Krner Strasse 1 61352 Bad Homburg Germany
(72)**Name of Inventor :**
1)CHAMNEY Paul
2)MOISSL Ulrich
3)WABEL Peter
4)WIESKOTTEN Sebastian
5)NIER Volker

(57) Abstract :
The present invention relates to a method for predicting the concentration or the mass of haemoglobin or an approximation thereof respectively in a body fluid and/or an extracorporeal sample thereof of a patient at a later second point of time the patient having theoretically or in reality been administered a certain dose of an erythropoesis stimulating agent at an earlier first point of time. It relates further to a method for determining the dose of an erythropoesis stimulating agent to be administered to a patient to a method for determining whether a patient is affected by circumstances leading to the loss of haemoglobin to corresponding devices and to an erythropoesis stimulating medicament for use in the treatment of anemia. Finally the present invention relates to corresponding means digital storage means a computer program product and a computer program.

No. of Pages : 71 No. of Claims : 40

(12) PATENT APPLICATION PUBLICATION
(19) INDIA
(22) Date of filing of Application :06/09/2012
(21) Application No.7794/DELNP/2012 A
(43) Publication Date : 14/03/2014

(54) Title of the invention : ENDOPARASITICIDAL COMPOSITIONS

(51) International classification :A01N37/34,A61K31/277,A61P33/00
(31) Priority Document No :00452/10
(32) Priority Date :25/03/2010
(33) Name of priority country :China
(86) International Application No :PCT/EP2011/054534
Filing Date :24/03/2011
(87) International Publication No :WO 2011/117346
(61) Patent of Addition to Application Number :NA
Filing Date :NA
(62) Divisional to Application Number :NA
Filing Date :NA

(71)**Name of Applicant :**
1)NOVARTIS AG
Address of Applicant :Lichtstrasse 35 CH 4056 Basel Switzerland
(72)**Name of Inventor :**
1)ROLFE Peter
2)MILLER Sarah
3)REISER Miriam
4)WIELAND BERGHAUSEN Susanne Christine

(57) Abstract :
The invention relates to a synergistic composition for controlling endoparasites in and on animals which comprises a combination of (A) a compound of formula (I) and (B) abamectin. The compositions are useful in the control of endoparasites in particular helminths in and on warm blooded animals.

No. of Pages : 14 No. of Claims : 10

(12) PATENT APPLICATION PUBLICATION
(19) INDIA
(22) Date of filing of Application :06/09/2012
(21) Application No.7795/DELNP/2012 A
(43) Publication Date : 14/03/2014

(54) Title of the invention : APOPTOSIS INDUCING AGENTS FOR THE TREATMENT OF CANCER AND IMMUNE AND AUTOIMMUNE DISEASES

(51) International classification :C07D295/112,C07D295/195,C07D417/04
(31) Priority Document No :61/317575
(32) Priority Date :25/03/2010
(33) Name of priority country :U.S.A.
(86) International Application No :PCT/US2011/027895
Filing Date :10/03/2011
(87) International Publication No :WO 2011/119345
(61) Patent of Addition to Application Number :NA
Filing Date :NA
(62) Divisional to Application Number :NA
Filing Date :NA

(71)**Name of Applicant :**
1)ABBVIE INC.
Address of Applicant :1 North Waukegan Road North Chicago IL 60064 U.S.A.
(72)**Name of Inventor :**
1)DING Hong
2)ELMORE Steven
3)HEXAMER Laura
4)KUNZER Aaron R.
5)PARK Cheol Min
6)SOUERS Andrew J.
7)SULLIVAN Gerard
8)WENDT Michael

(57) Abstract :
Disclosed are compounds which inhibit the activity of anti apoptotic Bcl 2 proteins compositions containing the compounds and methods of treating diseases during which is expressed anti apoptotic Bcl 2 protein.

No. of Pages : 123 No. of Claims : 4

(12) PATENT APPLICATION PUBLICATION
(19) INDIA
(22) Date of filing of Application :06/09/2012
(21) Application No.7796/DELNP/2012 A
(43) Publication Date : 14/03/2014

(54) Title of the invention : PROCESS FOR THE PREPARATION OF PYRAZOLE CARBOXYLIC ACID AMIDES

(51) International classification :C07D231/14,C07D303/17,C07C35/52
(31) Priority Document No :10160438.7
(32) Priority Date :20/04/2010
(33) Name of priority country :EPO
(86) International Application No :PCT/EP2011/055871
Filing Date :14/04/2011
(87) International Publication No :WO 2011/131545
(61) Patent of Addition to Application Number :NA
Filing Date :NA
(62) Divisional to Application Number :NA
Filing Date :NA

(71)**Name of Applicant :**
1)SYNGENTA PARTICIPATIONS AG
Address of Applicant :Schwarzwaldallee 215 CH 4058 Basel Switzerland
(72)**Name of Inventor :**
1)DUMEUNIER Raphael
2)SCHLETH Florian
3)VETTIGER Thomas
4)ROMMEL Michael
5)TRAH Stephan

(57) Abstract :
The invention relates to a process for the preparation of the compound of formula (I) which process comprises a) reacting a compound of formula (II) wherein X is chloro or bromo with an organometallic species in an inert atmosphere to a halobenzyne of formula (X) reacting the halobenzyne of formula X so formed with cyclopentadiene to (III) b) reacting III in the presence of an inert solvent with an oxidant to (IV) c) reacing IV in the presence of a Lewis acid and a hydride source to (V) d) reacting V in the presence of an oxidizing agent a base and an inert solvent to (VI) e) converting VI in the presence of a phosphane and CCl or CHCl to (VII) and either f1) reacting VII with NH in the presence of a catalyst to the compound of formula (VIII); and g) reacting VIII in the presence of a base with a compound of formula (IX) to the compound of formula (I); or f2) reacting the compound of formula (VII) in the presence of a solvent a base a copper catalyst and at least one ligand with the compound of formula (IXa) to the compound of formula (I).

No. of Pages : 29 No. of Claims : 9

(12) PATENT APPLICATION PUBLICATION
(19) INDIA
(22) Date of filing of Application :06/09/2012
(21) Application No.7797/DELNP/2012 A
(43) Publication Date : 14/03/2014

(54) Title of the invention : PROCESS FOR THE PREPARATION OF PYRAZOLE CARBOXYLIC ACID AMIDES

(51) International classification :C07D231/14,C07D303/08,C07D303/36
(31) Priority Document No :10160440.3
(32) Priority Date :20/04/2010
(33) Name of priority country :EPO
(86) International Application No :PCT/EP2011/055869
Filing Date :14/04/2011
(87) International Publication No :WO 2011/131543
(61) Patent of Addition to Application Number :NA
Filing Date :NA
(62) Divisional to Application Number :NA
Filing Date :NA

(71)**Name of Applicant :**
1)SYNGENTA PARTICIPATIONS AG
Address of Applicant :Schwarzwaldallee 215 CH 4058 Basel Switzerland
(72)**Name of Inventor :**
1)DUMEUNIER Raphael
2)TOBLER Hans

(57) Abstract :
The invention relates to a process for the preparation of formula (I) which process comprises a) reacting the compound (II) with cyclopentadiene to (III); b) reacting this compound in the presence of an oxidant to the compound of formula (IV); c) hydrogenating this compound in the presence of a metal catalyst and an inert solvent under hydrogen atmosphere to the compound of formula (V); d) reacting this compound in the presence of a Brnsted acid followed by a reducing agent to the compound of formula (VI); e) reacting VI with a compound (VII) in the presence of a base to a compound of formula (VIII); f) converting the compound of formula VIII in the presence of an oxidising agent to the compound of formula (IX); and g) reacting the compound of formula IX in the presence of triphenylphosphane/carbon tetrachloride or riphenylphosphane/bromotrichloromethane to the compound of formula I.

No. of Pages : 18 No. of Claims : 11

(12) PATENT APPLICATION PUBLICATION
(19) INDIA
(22) Date of filing of Application :06/09/2012
(21) Application No.7798/DELNP/2012 A
(43) Publication Date : 14/03/2014

(54) Title of the invention : PROCESS FOR THE PREPARATION OF PYRAZOLE CARBOXYLIC ACID AMIDES

(51) International classification :C07D231/14,C07C25/24
(31) Priority Document No :10160437.9
(32) Priority Date :20/04/2010
(33) Name of priority country :EPO
(86) International Application No :PCT/EP2011/055872
Filing Date :14/04/2011
(87) International Publication No :WO 2011/131546
(61) Patent of Addition to Application Number :NA
Filing Date :NA
(62) Divisional to Application Number :NA
Filing Date :NA

(71)**Name of Applicant :**
1)SYNGENTA PARTICIPATIONS AG
Address of Applicant :Schwarzwaldallee 215 CH 4058 Basel Switzerland
(72)**Name of Inventor :**
1)GRIBKOV Denis
2)STOHLER Remo
3)VETTIGER Thomas
4)ROMMEL Michael

(57) Abstract :
The invention relates to a process for the preparation of formula (I) which process comprises a) reacting a compound of formula (II) wherein X is chloro or bromo with an organometallic species to (III) wherein X is chloro or bromo; reacting the halobenzyne with a fulvene (IV) to a compound of formula(V) wherein X is chloro or bromo; b) hydrogenating V in the presence of a suitable metal catalyst to a compound of formula (VI) wherein X is chloro or bromo; and either c1) reacting the compound of formula VI with NH3 in the presence of a catalyst comprising palladium and at least one ligand to the compound of formula (VII); and d) reacting the compound of formula VII in the presence of a base with a compound of formula (VIII) to the compound of formula I; or c2 reacting the compound of formula (VI) in the presence of a copper catalyst and a ligand with the compound of formula (VIIIa) to the compound of formula (I).

No. of Pages : 23 No. of Claims : 6

(12) PATENT APPLICATION PUBLICATION
(19) INDIA
(22) Date of filing of Application :04/09/2012
(21) Application No.7692/DELNP/2012 A
(43) Publication Date : 14/03/2014

(54) Title of the invention : METHODS FOR PRODUCING PHOTOSENSITIVE MICROPARTICLES

(51) International classification :C09K9/02
(31) Priority Document No :12/719335
(32) Priority Date :08/03/2010
(33) Name of priority country :U.S.A.
(86) International Application No :PCT/US2011/025029
Filing Date :16/02/2011
(87) International Publication No :WO 2011/112327
(61) Patent of Addition to Application Number :NA
Filing Date :NA
(62) Divisional to Application Number :NA
Filing Date :NA

(71)**Name of Applicant :**
1)TRANSITIONS OPTICAL INC.
Address of Applicant :9251 Belcher Road Pinellas Park Florida 33782 U.S.A.
(72)**Name of Inventor :**
1)BOWLES Steven E.
2)CHOPRA Anu
3)DAUGHENBAUGH Randy E.
4)FALER Dennis L.
5)HALEY M. Frank
6)LAMERS Paul H.
7)LU Yunyi
8)STEWART Kevin J.
9)TAYLOR Cathy A.
10)WANG Feng
11)ZEZINKA Elizabeth A.

(57) Abstract :
Described are various methods of producing non aqueous dispersions of photosensitive polymeric microparticles comprising: (a) preparing one or more aqueous dispersions of a polymerizable component at least one of which contains a photosensitive material and wherein the polymerizable components comprise at least one hydrophilic functional group and/or at least one hydrophobic functional group; (b) subjecting the dispersion of (a) to conditions sufficient to form microparticles; (c) at least partially polymerizing the polymerizable component; (d) combining the dispersion with an organic continuous phase comprising an organic solvent; (e) removing water from the dispersion such that the final water content of the non aqueous dispersion is less than 30 percent by weight; wherein e) is performed before or after d); and (f) reacting any acid functional groups on the surface of the microparticles with a reactive material having at least one epoxy functional group. at least one thiocarbonylthio functional group at least one alkoxyamine functional group or at least one halide functional group.

No. of Pages : 69 No. of Claims : 23

(12) PATENT APPLICATION PUBLICATION
(19) INDIA
(22) Date of filing of Application :06/09/2012
(21) Application No.7800/DELNP/2012 A
(43) Publication Date : 14/03/2014

(54) Title of the invention : PROCESS FOR THE PREPARATION OF PYRAZOLE CARBOXYLIC ACID AMIDES

(51) International classification :C07D231/14,C07C23/38
(31) Priority Document No :10160439.5
(32) Priority Date :20/04/2010
(33) Name of priority country :EPO
(86) International Application No :PCT/EP2011/055870
Filing Date :14/04/2011
(87) International Publication No :WO 2011/131544
(61) Patent of Addition to Application Number :NA
Filing Date :NA
(62) Divisional to Application Number :NA
Filing Date :NA

(71)**Name of Applicant :**
1)SYNGENTA PARTICIPATIONS AG
Address of Applicant :Schwarzwaldallee 215 CH 4058 Basel Switzerland
(72)**Name of Inventor :**
1)SCHLETH Florian
2)VETTIGER Thomas
3)ROMMEL Michael
4)TOBLER Hans

(57) Abstract :
The invention relates to a process for the preparation of a compound of formula (I) which process comprises a) reacting a compound of formula (II) wherein X is chloro or bromo with an organometallic species to (III) reacting the halobenzyne of formula (III) so formed with (IV) wherein R and Rare hydrogen or C Calkyl; to (V) b) hydrogenating V in the presence of a metal catalyst to (VI) c) ozonising (VI) to (VII) d) converting (VII) in the presence of a phosphane and CCI or CHCI to (VIII) (VIII) and either e1) reacting VIII with NH in the presence of a catalyst to (IX) and f) reacting IX in the presence of a base with the compound of formula (X) to the compound of formula (I); or e2) reacting the compound of formula (VIII) in the presence of a solvent a base a copper catalyst and at least one ligand with (Xa) to the compound of formula (I).

No. of Pages : 25 No. of Claims : 6

(12) PATENT APPLICATION PUBLICATION
(19) INDIA
(22) Date of filing of Application :06/09/2012
(21) Application No.7801/DELNP/2012 A
(43) Publication Date : 14/03/2014

(54) Title of the invention : PACKAGING CONTAINING IMPROVED DISPENSING AND CARRYING ELEMENTS

(51) International classification :B65D75/56,B65D75/58,B65D85/16
(31) Priority Document No :61/310999
(32) Priority Date :05/03/2010
(33) Name of priority country :U.S.A.
(86) International Application No :PCT/US2011/026565
Filing Date :01/03/2011
(87) International Publication No :WO 2011/109317
(61) Patent of Addition to Application Number :NA
Filing Date :NA
(62) Divisional to Application Number :NA
Filing Date :NA

(71)**Name of Applicant :**
1)THE PROCTER & GAMBLE COMPANY
Address of Applicant :One Procter & Gamble Plaza Cincinnati Ohio 45202 U.S.A.
(72)**Name of Inventor :**
1)HERNANDEZ Maria Alexandra
2)CHAPARRO Carolina
3)VALERA Ana Flor
4)SIESTO CASANOVA Florella Maria
5)NARANJO Kharolys Margarita

(57) Abstract :
A package containing disposable absorbent articles wherein the package incorporates improved dispensing and carrying elements which aids in consumer use of the package.

No. of Pages : 14 No. of Claims : 6

(12) PATENT APPLICATION PUBLICATION
(19) INDIA
(22) Date of filing of Application :06/09/2012
(21) Application No.7803/DELNP/2012 A
(43) Publication Date : 14/03/2014

(54) Title of the invention : ADDITIVE FOR ERYTHROCYTE RICH SOLUTION AND CONTAINER FOR MEDICAL PURPOSES

(51) International classification :A61K35/14,A61J1/10,A61J3/00
(31) Priority Document No :2010036932
(32) Priority Date :23/02/2010
(33) Name of priority country :Japan
(86) International Application No:PCT/JP2011/053209
Filing Date :16/02/2011
(87) International Publication No :WO 2011/105257
(61) Patent of Addition to Application Number :NA
Filing Date :NA
(62) Divisional to Application Number :NA
Filing Date :NA

(71)**Name of Applicant :**
1)TERUMO KABUSHIKI KAISHA
Address of Applicant :44 1Hatagaya 2 chome Shibuya ku Tokyo 1510072 Japan
(72)**Name of Inventor :**
1)TAKEDA Norihiko

(57) Abstract :
An additive for an erythrocyte rich solution characterized by being produced by adding an anti hemolytic agent and a surfactant to an erythrocyte preservation solution wherein the surfactant has an HLB value of 13 or more and the number of oxyethylene groups contained in the hydrophilic moiety in the molecular structure of the surfactant is 20 or more; and a container for medical purposes characterized having the additive for an erythrocyte rich solution filled in the interior of the main body thereof.

No. of Pages : 38 No. of Claims : 9

(12) PATENT APPLICATION PUBLICATION
(19) INDIA
(22) Date of filing of Application :06/09/2012
(21) Application No.7805/DELNP/2012 A
(43) Publication Date : 14/03/2014

(54) Title of the invention : PURIFICATION OF CASPOFUNGIN INTERMEDIATES

(51) International classification :C07K7/56
(31) Priority Document No :10158204.7
(32) Priority Date :29/03/2010
(33) Name of priority country :EPO
(86) International Application No :PCT/EP2011/054351
Filing Date :22/03/2011
(87) International Publication No :WO 2011/120842
(61) Patent of Addition to Application Number :NA
Filing Date :NA
(62) Divisional to Application Number :NA
Filing Date :NA

(71)**Name of Applicant :**
1)DSM SINOCHEM PHARMACEUTICALS NETHERLANDS B.V.
Address of Applicant :Alexander Fleminglaan 1 NL 2613 AX Delft Netherlands
(72)**Name of Inventor :**
1)PATER DE Robertus Mattheus

(57) Abstract :
The present invention relates to a method for the purification of cyclopeptides of general formula (3) by means of a silicate.

No. of Pages : 18 No. of Claims : 10

(12) PATENT APPLICATION PUBLICATION
(19) INDIA
(22) Date of filing of Application :04/09/2012
(21) Application No.7688/DELNP/2012 A
(43) Publication Date : 14/03/2014

(54) Title of the invention : PUMP TURBINE SYSTEM

(51) International classification :F03B 3/10
(31) Priority Document No :10 2011 107 829.4
(32) Priority Date :01/07/2011
(33) Name of priority country :Germany
(86) International Application No :PCT/EP2012/001781
Filing Date :26/04/2012
(87) International Publication No :WO 2013/004321
(61) Patent of Addition to Application Number :NA
Filing Date :NA
(62) Divisional to Application Number :NA
Filing Date :NA

(71)**Name of Applicant :**
1)VOITH PATENT GMBH
Address of Applicant :St. Pltener Str. 43 89522 Heidenheim Germany
(72)**Name of Inventor :**
1)STUMMER Manfred

(57) Abstract :
The invention relates to a pump turbine system comprising a turbine with a turbine rotor and a spiral turbine housing; a pump with a pump rotor and a spiral pump housing; an electric machine which is drive connected to the shaft or can be brought into a connection of this type; a hydraulic short circuit can be produced between the turbine and the pump. The invention is characterized by the following features: the turbine has a higher nominal rating than the pump; in each case one labyrinth seal is formed from the rotor and the housing of each of the hydraulic machines through which labyrinth seal a leakage flow for cooling and/or lubricating the labyrinth seal flows during operation; the labyrinth seal comprises a plurality of annular chambers and ducts in the shape of annular gaps which connect said annular chambers to one another in a conducting manner; the rotor and housing of the relevant hydraulic machine are mounted such that they can be displaced relative to one another between an operating position and a non operating position in the direction of a leakage flow.

No. of Pages : 20 No. of Claims : 13

(12) PATENT APPLICATION PUBLICATION
(19) INDIA
(22) Date of filing of Application :04/09/2012
(21) Application No.7689/DELNP/2012 A
(43) Publication Date : 14/03/2014

(54) Title of the invention : A SEGMENTALIZED SPARE TYRE ASSEMBLY

(51) International classification :B60C17/04,B60C7/28,B60C7/08
(31) Priority Document No :2010000561
(32) Priority Date :05/02/2010
(33) Name of priority country :Malaysia
(86) International Application No :PCT/MY2010/000022
Filing Date :11/02/2010
(87) International Publication No :WO 2011/096788
(61) Patent of Addition to Application Number :NA
Filing Date :NA
(62) Divisional to Application Number :NA
Filing Date :NA

(71)**Name of Applicant :**
1)ASOKA Dhayalan
Address of Applicant :No. 33 Jalan Riang 4 Taman Gembira 81200 Johor Bahru Malaysia
(72)**Name of Inventor :**
1)ASOKA Dhayalan

(57) Abstract :
A segmentalized spare tyre (10) assembly comprising: a plurality of tyre segments (11) having hollow interiors (21) placed end to end to form a circular tyre structure for attachment to a rim (15) of a vehicle wheel; a plurality of rods (12) extending through cavities in each of the tyre segments (11) for joining and aligning the tyre segments (11) in an arcuate configuration to permit the vehicle to roll thereon; means for connecting the tyre segments (11) to form a circular tyre structure; and means for releasably fastening the tyre segments (11) to the rim (15) of the vehicle wheel.

No. of Pages : 23 No. of Claims : 7

(12) PATENT APPLICATION PUBLICATION
(19) INDIA
(22) Date of filing of Application :06/09/2012
(21) Application No.7807/DELNP/2012 A
(43) Publication Date : 14/03/2014

(54) Title of the invention : ELECTRICAL DISTRIBUTION DEVICE AND METHOD FOR FITTING THE SAME

(51) International classification :H01R13/66,H01R31/00,H01R13/6591
(31) Priority Document No :10 2010 017 311.8
(32) Priority Date :09/06/2010
(33) Name of priority country :Germany
(86) International Application No :PCT/EP2011/059588
Filing Date :09/06/2011
(87) International Publication No :WO 2011/154495
(61) Patent of Addition to Application Number :NA
Filing Date :NA
(62) Divisional to Application Number :NA
Filing Date :NA

(71)**Name of Applicant :**
1)PHOENX CONTACT GMBH & CO. KG
Address of Applicant :Flachsmarktstrae 8 32825 Blomberg Germany
(72)**Name of Inventor :**
1)WIMMER Michael
2)KNEIDL Martin

(57) Abstract :
The subject matter of the invention is an electrical distribution device (10) in particular a distribution piece for connection to line and/or connecting devices (12) which have shielding devices (18) wherein the distribution device (10) has a conductive housing (20) for forming a shield and has at least one conductor track mount (26 28) which is arranged in the housing (20) for connection of the various line and/or connecting devices (12). According to the invention the shielding devices (18) can be conductively connected via the conductor track mount (26 28) to at least one contact element (40 42) which can be attached to said mount and the housing has conductive housing parts (36 38) wherein at least one of the housing parts (36 38) has at least one structure (46 48) with at least one elastic contact projection (50 52) for making electrical contact with the attached contact element (40 42) and another of the housing parts (38 36) has at least one clamping device (56 54) with two clamping jaws (58 60) for clamping the contact projection (50 52) to the attached contact element (40 42) when the housing parts (36 38) are joined together. The invention furthermore relates to a method for fitting a corresponding electrical distribution device (10).

No. of Pages : 17 No. of Claims : 12

(12) PATENT APPLICATION PUBLICATION
(19) INDIA
(22) Date of filing of Application :06/09/2012
(21) Application No.7808/DELNP/2012 A
(43) Publication Date : 14/03/2014

(54) Title of the invention : ELECTRIC PLUG

(51) International classification :B60L11/18,H01R24/28,H01R107/00
(31) Priority Document No :10 2010 017 458.0
(32) Priority Date :18/06/2010
(33) Name of priority country :Germany
(86) International Application No :PCT/EP2011/060168
Filing Date :17/06/2011
(87) International Publication No :WO 2011/157841
(61) Patent of Addition to Application Number :NA
Filing Date :NA
(62) Divisional to Application Number :NA
Filing Date :NA

(71)**Name of Applicant :**
1)PHOENIX CONTACT GMBH & CO. KG
Address of Applicant :Flachsmarktstrae 8 32825 Blomberg Germany
(72)**Name of Inventor :**
1)ANDRESEN Jens
2)FHRER Thomas
3)KROME Karsten
4)NEHM Detlef
5)FELDNER Ralf
6)FRANKE Jens

(57) Abstract :
The invention relates to an electric plug (1) in particular a charging plug for a motor vehicle comprising a housing (4) and a handle (5) for holding the electric plug (1) wherein the housing (4) comprises a plug in section (6) a cable connection opening (10) and a cable conduit (11) the plug in section (6) comprises a plurality of electric contacts (7) for plugging into a socket (2) and for contacting counter contacts (9) provided there the cable connection opening (10) is provided for letting in or letting out an electric cable (3) the cable (3) can be routed in the cable conduit (11) from the cable connection opening (10) to the plug in section (6) and can be electrically contacted there to the electric contacts (7) and the handle (5) comprises a gripping section (12) for being gripped by a human hand and is fastened to the housing (4) such that the gripping section (12) does not surround the cable connection opening (10) and the cable conduit (11). According to the invention the cable connection opening (10) is arranged in a region between the plug in section (6) and the end of the gripping section (12) which is remote from the plug in section (6). In this way the electric plug (1) that is provided is such that heating of the handle (5) can be avoided and the electric plug can also be used well and ergonomically by smaller and more petite persons.

No. of Pages : 20 No. of Claims : 10

(12) PATENT APPLICATION PUBLICATION
(19) INDIA
(22) Date of filing of Application :04/09/2012
(21) Application No.7699/DELNP/2012 A
(43) Publication Date : 14/03/2014

(54) Title of the invention : LIFTING UNIT FOR LIFTING A ROTOR OF A WIND ENERGY INSTALLATION

(51) International classification :B66C1/12
(31) Priority Document No :20 2010 004 093.0
(32) Priority Date :23/03/2010
(33) Name of priority country :Germany
(86) International Application No :PCT/EP2011/054432
Filing Date :23/03/2011
(87) International Publication No :WO 2011/117290
(61) Patent of Addition to Application Number :NA
Filing Date :NA
(62) Divisional to Application Number :NA
Filing Date :NA

(71)**Name of Applicant :**
1)WOBBEN PROPERTIES GMBH
Address of Applicant :Dreekamp 5 26605 Aurich Germany
(72)**Name of Inventor :**
1)LLKER Frank

(57) Abstract :
What is envisaged is: a lifting unit for lifting a rotor of a wind energy installation. The lifting unit has at least one first sling (100) for looping around a region of a rotor blade which is close to the rotor blade base on a rotor of the wind energy installation at least one transverse strut (900) at least one first and second struts or sling elements (300 400) and at least one first and second articulation units (200 210). The at least one first and second struts or sling elements (300 400) extend between the at least one first and second articulation units (200 210) and the transverse strut (900). In addition the lifting unit has at least one second sling (500) which has a first and a second sling element (510 520) and a strut (530). The first ends of the first and second sling elements (510 520) are fixed to the first and second articulation units (200 210). The second sling (500) is configured so as to be arranged around a rotor blade tip.

No. of Pages : 11 No. of Claims : 3

(12) PATENT APPLICATION PUBLICATION
(19) INDIA
(22) Date of filing of Application :07/09/2012
(21) Application No.7820/DELNP/2012 A
(43) Publication Date : 14/03/2014

(54) Title of the invention : POLYURETHANE WITH IMPROVED ABRASION RESISTANCE THE METHOD FOR PREPARING THE SAME AND USE THEREOF

(51) International classification :C08G18/69,C08L75/04
(31) Priority Document No :201010119203.4
(32) Priority Date :08/03/2010
(33) Name of priority country :China
(86) International Application No :PCT/EP2011/053279
Filing Date :04/03/2011
(87) International Publication No :WO 2011/110485
(61) Patent of Addition to Application Number :NA
Filing Date :NA
(62) Divisional to Application Number :NA
Filing Date :NA

(71)**Name of Applicant :**
1)BAYER INTELLECTUAL PROPERTY GMBH
Address of Applicant :Alfred Nobel Strasse 10 40789 Monheim Germany
(72)**Name of Inventor :**
1)TORRES Sam
2)CAO Zhong
3)LIU Xiang
4)ZHANG Yue Dong

(57) Abstract :
The present invention pertains to a polyurethane with improved abrasion resistance. The reactive component for preparing the polyurethane includes a polybutadiene wherein the polybutadiene comprises 1 2 butene structure unit 2 3 (cis) butene structure unit and 2 3 (trans) butene structure unit wherein the amount of the 2 3 (trans) butene structure unit is more than the amount of the 2 3 (cis) butene structure unit. The polyurethane presented in this invention possesses improved abrasion resistance and good surface quality.

No. of Pages : 24 No. of Claims : 22

(12) PATENT APPLICATION PUBLICATION
(19) INDIA
(22) Date of filing of Application :07/09/2012
(21) Application No.7821/DELNP/2012 A
(43) Publication Date : 14/03/2014

(54) Title of the invention : CORRECTING ERRORS IN MEASUREMENTS TAKEN WITH A COORDINATE POSITIONING APPARATUS

(51) International classification :G01B21/04
(31) Priority Document No :1003599.6
(32) Priority Date :04/03/2010
(33) Name of priority country :U.K.
(86) International Application No :PCT/GB2011/000300
Filing Date :04/03/2011
(87) International Publication No :WO 2011/107746
(61) Patent of Addition to Application Number :NA
Filing Date :NA
(62) Divisional to Application Number :NA
Filing Date :NA

(71)**Name of Applicant :**
1)RENISHAW PLC
Address of Applicant :New Mills Wotton under Edge Gloucestershire GL12 8JR U.K.
2)METROLOGY SOFTWARE PRODUCTS LIMITED
(72)**Name of Inventor :**
1)JONAS Kevyn Barry
2)McFARLAND Geoffrey
3)HAMMOND Peter Russell
4)BROWN Anthony

(57) Abstract :
An error correction method for coordinate positioning apparatus is described. The method comprises (i) taking a first data set comprising one or more first data values each first data value describing a position on the surface of a first object (ii) taking a second data set comprising one or more second data values each second data value describing a position on the surface of the first object and (iii) calculating an error map comprising one or more error values each error value describing a positional difference between the surface as described by the first data set and the surface as described by the second data set. The surface normal of the first object is known at each position described by each first data value and step (in) comprises calculating each error value by determining the positional difference substantially in the direction of the known surface normal. A processing or measurement operation is performed on the first object or an object nominally identical to the first object in which positions on the surface thereof are corrected using the error map calculated in step (iii).

No. of Pages : 38 No. of Claims : 15

(12) PATENT APPLICATION PUBLICATION
(19) INDIA
(22) Date of filing of Application :07/09/2012
(21) Application No.7822/DELNP/2012 A
(43) Publication Date : 14/03/2014

(54) Title of the invention : CORRECTING ERRORS IN MEASUREMENTS TAKEN USING A COORDINATE POSITIONING APPARATUS

(51) International classification :G01B21/04
(31) Priority Document No :1003363.7
(32) Priority Date :01/03/2010
(33) Name of priority country :U.K.
(86) International Application No :PCT/GB2011/000274
Filing Date :28/02/2011
(87) International Publication No :WO 2011/107729
(61) Patent of Addition to Application Number :NA
Filing Date :NA
(62) Divisional to Application Number :NA
Filing Date :NA

(71)**Name of Applicant :**
1)RENISHAW PLC
Address of Applicant :New Mills Wotton under Edge Gloucestershire GL12 8JR U.K.
(72)**Name of Inventor :**
1)JONAS Kevyn Barry

(57) Abstract :
A method of operating coordinate positioning apparatus having a measurement probe (18) is described. The method comprising a step of taking a first part (24) in a series of nominally identical parts at least a first reference geometrical property associated with one or more features of the first part (24) being known. A step is also performed of using the coordinate positioning apparatus to measure the one or more features of the first part (24) and determining therefrom a first measured geometrical property that corresponds to the first reference geometrical property. A first property correction value is then determined that describes a difference between the first reference geometrical property and the first measured geometrical property. The coordinate positioning apparatus is then used to measure the one or more features of one or more further parts in the series of nominally identical parts and for each further part a further measured geometrical property is determined that corresponds to the first reference geometrical property. The first property correction value is then applied to each further measured geometrical property. A corresponding coordinate positioning apparatus is also described.

No. of Pages : 27 No. of Claims : 15

(12) PATENT APPLICATION PUBLICATION
(19) INDIA
(22) Date of filing of Application :04/09/2012
(21) Application No.7706/DELNP/2012 A
(43) Publication Date : 14/03/2014

(54) Title of the invention : EXHAUST GAS PURIFICATION DEVICE

(51) International classification :F01N3/28,F01N3/02
(31) Priority Document No :2010060959
(32) Priority Date :17/03/2010
(33) Name of priority country :Japan
(86) International Application No :PCT/JP2011/054172
Filing Date :24/02/2011
(87) International Publication No :WO 2011/114857
(61) Patent of Addition to Application Number :NA
Filing Date :NA
(62) Divisional to Application Number :NA
Filing Date :NA

(71)**Name of Applicant :**
1)YANMAR CO.LTD.
Address of Applicant :1 9 Tsurunocho Kita ku Osaka shi Osaka 5308311 Japan
(72)**Name of Inventor :**
1)MITSUDA Masataka

(57) Abstract :
Disclosed is an exhaust gas purification device which can improve the maintenance workability and the mounting workability of gas purification bodies (2 3) exhaust gas purification cases (4 5 20 21) and the like. The exhaust gas purification device is provided with gas purification bodies (2 3) which purify the exhaust gas emitted from an engine (70) and a gas purification housing (60) which houses the gas purification bodies (2 3). The exhaust gas purification device has a structure equipped with a support bracket (62) which supports the gas purification housing (60) and is characterised in being configured such that a bolt hole (87a) is formed in the support bracket (62) an insert guide (89) is formed on the support bracket (62) and a mounting bolt (87) is engaged or disengaged from the bolt hole (87a) via the insert guide (89).

No. of Pages : 71 No. of Claims : 6

(12) PATENT APPLICATION PUBLICATION
(19) INDIA
(22) Date of filing of Application :07/09/2012
(21) Application No.7823/DELNP/2012 A
(43) Publication Date : 14/03/2014

(54) Title of the invention : HIGH TEMPERATURE/HIGH PRESSURE SEAL

(51) International classification :F16J15/32,E21B10/25,F16J15/56
(31) Priority Document No :12/720391
(32) Priority Date :09/03/2010
(33) Name of priority country :U.S.A.
(86) International Application No :PCT/US2011/027025
Filing Date :03/03/2011
(87) International Publication No :WO 2011/112419
(61) Patent of Addition to Application Number :NA
Filing Date :NA
(62) Divisional to Application Number :NA
Filing Date :NA

(71)**Name of Applicant :**
1)BAKER HUGHES INCORPORATED
Address of Applicant :PO Box 4740 Houston Texas 77210 4740 U.S.A.
(72)**Name of Inventor :**
1)DOANE James C.

(57) Abstract :
A sealing member including a body having a recess; one or more backups extending from the body and tapering over a length thereof; and a sealing element disposed in the recess the element including one or more steps each step being adjacent one of the one or more backups and on a surface of the sealing element intended to make contact with a target sealing surface.

No. of Pages : 7 No. of Claims : 12

(12) PATENT APPLICATION PUBLICATION
(19) INDIA
(22) Date of filing of Application :07/09/2012
(21) Application No.7824/DELNP/2012 A
(43) Publication Date : 14/03/2014

(54) Title of the invention : METHODS AND COMPOSITIONS FOR DOPING SILICON SUBSTRATES WITH MOLECULAR MONOLAYERS

(51) International classification :H01L21/324
(31) Priority Document No :61/311516
(32) Priority Date :08/03/2010
(33) Name of priority country :U.S.A.
(86) International Application No :PCT/US2011/027493
Filing Date :08/03/2011
(87) International Publication No :WO 2011/112546
(61) Patent of Addition to Application Number :NA
Filing Date :NA
(62) Divisional to Application Number :NA
Filing Date :NA

(71)**Name of Applicant :**
1)DYNALOY LLC
Address of Applicant :200 South Wilcox Drive Kingsport TN 37660 U.S.A.
(72)**Name of Inventor :**
1)POLLARD Kimberly Dona
2)RECTOR Allison C.

(57) Abstract :
Compositions and methods for doping silicon substrates by treating the substrate with a diluted dopant solution comprising tetraethylene glycol dimethyl ether (tetraglyme) and a dopant containing material and subsequently diffusing the dopant into the surface by rapid thermal annealing. Diethyl 1 propylphosphonate and allylboronic acid pinacol ester are preferred dopant containing materials and are preferably included in the diluted dopant solution in an amount ranging from about 1 % to about 20% with a dopant amount of 4% or less being more preferred.

No. of Pages : 20 No. of Claims : 25

(12) PATENT APPLICATION PUBLICATION
(19) INDIA
(22) Date of filing of Application :07/09/2012
(21) Application No.7825/DELNP/2012 A
(43) Publication Date : 14/03/2014

(54) Title of the invention : POLYURETHANE ELASTOMER BALLAST MAT AND PREPARATION THEREOF

(51) International classification :C08G18/10,E01B1/00
(31) Priority Document No :CN201010120634.2
(32) Priority Date :09/03/2010
(33) Name of priority country :China
(86) International Application No :PCT/EP2011/053290
Filing Date :04/03/2011
(87) International Publication No :WO 2011/110489
(61) Patent of Addition to Application Number :NA
Filing Date :NA
(62) Divisional to Application Number :NA
Filing Date :NA

(71)**Name of Applicant :**
1)BAYER INTELLECTUAL PROPERTY GMBH
Address of Applicant :Alfred Nobel Strasse 10 40789 Monheim Germany
(72)**Name of Inventor :**
1)ZHANG Chenxi
2)PANG Yongdong
3)LIN Jen Chieh Roy
4)TAN Xiang

(57) Abstract :
The present invention provides a polyurethane elastomer ballast mat and the preparation thereof and a railway track bed and railway facilities using the same. The polyurethane elastomer ballast mat according to this invention comprises a reaction product prepared by spraying a reaction system comprising a polyisocyanate a polyol a chain extender a blowing agent and a catalyst on the surface of a railway roadbed or on one surface of a ballast mat shielding to conduct a reaction. The technical solution of the present invention makes it possible to provide ballast mats with different mechanical properties shapes thicknesses and sizes depending on particular installation conditions in order to adapt to various requirements for installation and use in railway construction.

No. of Pages : 24 No. of Claims : 15

(12) PATENT APPLICATION PUBLICATION
(19) INDIA
(22) Date of filing of Application :07/09/2012
(21) Application No.7826/DELNP/2012 A
(43) Publication Date : 14/03/2014

(54) Title of the invention : MORTISE LOCK WITH DUAL REVERSE/LOCKOUT MECHANISM

(51) International classification :E05B55/00
(31) Priority Document No :12/732967
(32) Priority Date :26/03/2010
(33) Name of priority country :U.S.A.
(86) International Application No :PCT/US2011/029890
Filing Date :25/03/2011
(87) International Publication No :WO 2011/119900
(61) Patent of Addition to Application Number :NA
Filing Date :NA
(62) Divisional to Application Number :NA
Filing Date :NA

(71)**Name of Applicant :**
1)NEWFREY LLC
Address of Applicant :1207 Drummond Plaza Newark DE 19711 U.S.A.
(72)**Name of Inventor :**
1)SHEN Tony

(57) Abstract :
A mortise lock incorporating a modular powerpack with dual independent return mechanisms one for the inside operator and one for the outside using linear springs and with a lockout feature for selective locking out of the return mechanisms to accommodate external operators with built in powerpacks.

No. of Pages : 15 No. of Claims : 11

(12) PATENT APPLICATION PUBLICATION
(19) INDIA
(22) Date of filing of Application :04/09/2012
(21) Application No.7707/DELNP/2012 A
(43) Publication Date : 14/03/2014

(54) Title of the invention : FAULT DIAGNOSIS DEVICE AND FAULT DIAGNOSIS METHOD

(51) International classification :H01L31/04
(31) Priority Document No :2010042897
(32) Priority Date :26/02/2010
(33) Name of priority country :Japan
(86) International Application No :PCT/JP2010/068873
Filing Date :25/10/2010
(87) International Publication No :WO 2011/104931
(61) Patent of Addition to Application Number :NA
Filing Date :NA
(62) Divisional to Application Number :NA
Filing Date :NA

(71)**Name of Applicant :**
1)KABUSHIKI KAISHA TOSHIBA
Address of Applicant :1 1 Shibaura 1 chome Minato ku Tokyo 1058001 Japan
(72)**Name of Inventor :**
1)HASEGAWA Yoshiaki
2)SATO Makoto
3)SUYAMA Akihiro

(57) Abstract :
Disclosed is a fault diagnosis device provided with: a sunlight state estimation unit (204) which uses actual output power that is output from storage and an output characteristics model that predicts output power from a sunlight state affecting power generation and which estimates the value of the sunlight state closest to the actual output power for each power generation module as a sunlight state estimation value; a sunlight state spatial correction unit (206) which corrects the sunlight state estimation values in such a way that the sum of the sunlight state estimation values of the power generation modules contained in a storage of interest is within a range determined by the sum of sunlight state estimation values for adjacent storages that are adjacent in the lengthwise direction on the plane of the storage of interest and obtains corrected sunlight state estimation values; and an output power fault determination unit (207) which determines that a fault has been generated when the difference between the sum of the expected output power which is expected for the power generation modules and is calculated by using the output characteristics model and the corrected sunlight state estimation values in the storage and the actual output power is equal to or greater than a threshold value and the actual output power is less than the expected output power.

No. of Pages : 82 No. of Claims : 14

(12) PATENT APPLICATION PUBLICATION
(19) INDIA
(22) Date of filing of Application :07/09/2012

(21) Application No.7830/DELNP/2012 A
(43) Publication Date : 14/03/2014

(54) Title of the invention : SENSOR DATA PROCESSING

(51) International classification :H04N7/18,G01C3/08
(31) Priority Document No :2010200875
(32) Priority Date :09/03/2010
(33) Name of priority country :Australia
(86) International Application No :PCT/AU2011/000205
Filing Date :25/02/2011
(87) International Publication No :WO 2011/109856
(61) Patent of Addition to Application Number :NA
Filing Date :NA
(62) Divisional to Application Number :NA
Filing Date :NA

(71)**Name of Applicant :**
1)THE UNIVERSITY OF SYDNEY
Address of Applicant :Parramatta Road Sydney New South Wales 2006 Australia
(72)**Name of Inventor :**
1)PEYNOT Thierry

(57) Abstract :
A method and apparatus for processing sensor data comprising measuring a value of a first parameter of a scene (10) using a first sensor (4) (e.g. a camera) to produce a first image of the scene (10) measuring a value of a second parameter of the scene (10) using a second sensor (6) (e.g. a laser scanner) to produce a second image identifying a first point of the first image that corresponds to a class of features of the scene (10) identifying a second point of the second image that corresponds to the class of features projecting the second point onto the first image determining a similarity value between the first point and the projection of the second point on to the first image and comparing the determined similarity value to a predetermined threshold value. The method or apparatus may be used on an autonomous vehicle (2).

No. of Pages : 31 No. of Claims : 17

(12) PATENT APPLICATION PUBLICATION
(19) INDIA
(22) Date of filing of Application :07/09/2012
(21) Application No.7831/DELNP/2012 A
(43) Publication Date : 14/03/2014

(54) Title of the invention : METHOD FOR MANUFACTURING POLYMER GRADE BIO BASED ACRYLIC ACID FROM GLYCEROL

(51) International classification :C07C45/52,C07C51/25,C07C51/44
(31) Priority Document No :1051961
(32) Priority Date :18/03/2010
(33) Name of priority country :France
(86) International Application No :PCT/FR2011/050512
Filing Date :15/03/2011
(87) International Publication No :WO 2011/114051
(61) Patent of Addition to Application Number :NA
Filing Date :NA
(62) Divisional to Application Number :NA
Filing Date :NA

(71)**Name of Applicant :**
1)ARKEMA FRANCE
Address of Applicant :420 rue dEstienne dOrves F 92700 Colombes France
(72)**Name of Inventor :**
1)FAUCONET Michel
2)TLILI Nabil

(57) Abstract :
The present invention relates to the manufacture of a polymer grade bio based acrylic acid said polymer grade being defined by a minimum C content and by the content limiting thresholds for impurities detrimental to the polymerization methods in particular total aldehydes protoanemonin maleic anhydride and non phenolic polymerization inhibitors. One aim of the invention is a method for manufacturing said acid from glycerol as a raw material said method including a step of extracting the acrylic acid by means of a heavy hydrophobic solvent. The invention also relates to the use of said acid for manufacturing superabsorbent materials or for manufacturing polymers or copolymers by polymerizing derivatives of said acid in the form of ester or amide.

No. of Pages : 28 No. of Claims : 11

(12) PATENT APPLICATION PUBLICATION
(19) INDIA
(22) Date of filing of Application :07/09/2012
(21) Application No.7832/DELNP/2012 A
(43) Publication Date : 14/03/2014

(54) Title of the invention : SINTER CAKE SUPPORT STAND OVERLAY WELDING WIRE AND OVERLAY WELDING METAL

(51) International classification :B23K35/30,C22B1/20,F27B21/08
(31) Priority Document No :2010064471
(32) Priority Date :19/03/2010
(33) Name of priority country :Japan
(86) International Application No :PCT/JP2011/057488
Filing Date :18/03/2011
(87) International Publication No :WO 2011/115307
(61) Patent of Addition to Application Number :NA
Filing Date :NA
(62) Divisional to Application Number :NA
Filing Date :NA

(71)**Name of Applicant :**
1)NIPPON STEEL & SUMITOMO METAL CORPORATION
Address of Applicant :6 1 Marunouchi 2 chome Chiyoda ku Tokyo 100-8071, JAPAN
2)TOKUDEN CO. LTD.
(72)**Name of Inventor :**
1)HAMATANI Hideki
2)SATO Hiroyuki
3)YUKIYAMA Makoto
4)FUJII Hirokazu

(57) Abstract :
Disclosed is a sinter cake support stand which in high temperature environments having sintered ore heating temperatures of 1200 1400C has excellent abrasion resistance and breaking resistance and corrosion resistance to a high temperature oxidizing / sulfidizing atmosphere. For that reason the disclosed sinter cake support stand (10) which is arranged on a sintering pallet of a downward suction sintering machine which produces sintered ore has a pedestal (11) mounted on the aforementioned sintering pallet and a blade unit (15) extending upward from the pedestal (11); at least at the top edge of the blade unit (15) an overlay welding section (18) is provided wherein the overlay welding metal constituting said overlay welding section (18) contains C: 3.0 5.0 mass% Si: 0.8 2.0 mass% Cr: 10 15 mass% Mo: 7 10 mass% and the remaining portion comprising a composition of Fe and unavoidable impurities.

No. of Pages : 27 No. of Claims : 6

(12) PATENT APPLICATION PUBLICATION
(19) INDIA
(22) Date of filing of Application :05/09/2012
(21) Application No.7721/DELNP/2012 A
(43) Publication Date : 14/03/2014

(54) Title of the invention : METHOD FOR PRODUCING OPTICALLY ACTIVE N MONOALKYL 3 HYDROXY 3 ARYLPROPYLAMINE COMPOUND

(51) International classification	:C07D333/20,C07B53/00,C07B61/00
(31) Priority Document No	:2010067904
(32) Priority Date	:24/03/2010
(33) Name of priority country	:Japan
(86) International Application No	:PCT/JP2011/056971
Filing Date	:23/03/2011
(87) International Publication No	:WO 2011/118625
(61) Patent of Addition to Application Number	:NA
Filing Date	:NA
(62) Divisional to Application Number	:NA
Filing Date	:NA

(71)**Name of Applicant :**
1)SUMITOMO SEIKA CHEMICALS CO. LTD.
Address of Applicant :346 1 Miyanishi Harima cho Kako gun Hyogo 6750145 Japan
(72)**Name of Inventor :**
1)KOGAMI Kenji
2)SATAKE Shuzo

(57) Abstract :
Disclosed is a method for producing an N monoalkyl 3 hydroxy 3 arylpropylamine compound which is represented by general formula (2) (therein Ar represents an optionally substituted aryl group or an optionally substituted heteroaryl group R represents an optionally substituted alkyl group having 1 5 carbon atoms and represents an asymmetric carbon atom) the method being characterised in that an N benzyl N monoalkyl 3 oxo 3 arylpropenylamine compound represented by general formula (1) (therein Ar and R are as above) and hydrogen gas are reacted in the presence of an asymmetric reduction catalyst. Thus an optically active N monoalkyl 3 hydroxy 3 arylpropylamine compound can be easily and inexpensively produced under commercially advantageous conditions.

No. of Pages : 13 No. of Claims : 3

(12) PATENT APPLICATION PUBLICATION
(19) INDIA
(22) Date of filing of Application :05/09/2012
(21) Application No.7722/DELNP/2012 A
(43) Publication Date : 14/03/2014

(54) Title of the invention : BIPARATOPIC ABETA BINDING POLYPEPTIDES

(51) International classification :C07K16/18,C07K16/46,A61K39/395
(31) Priority Document No :10155339.4
(32) Priority Date :03/03/2010
(33) Name of priority country :EPO
(86) International Application No :PCT/EP2011/053090
Filing Date :02/03/2011
(87) International Publication No :WO 2011/107507
(61) Patent of Addition to Application Number :NA
Filing Date :NA
(62) Divisional to Application Number :NA
Filing Date :NA

(71)**Name of Applicant :**
1)BOEHRINGER INGELHEIM INTERNATIONAL GMBH
Address of Applicant :Binger Strasse 173 55216 Ingelheim Am Rhein Germany
(72)**Name of Inventor :**
1)PARK John E.
2)DORNER CIOSSEK Cornelia
3)HOERER Stefan
4)KUSSMAUL Lothar
5)LENTER Martin
6)ZIMMERMANN Katharina
7)BESTE Gerald
8)LAEREMANS Toon
9)MERCHIERS Pascal
10)VERCAMMEN Jo

(57) Abstract :
The invention relates to biparatopic A beta binding polypeptides and more specifically to biparatopic A beta binding polypeptides comprising at least two immunoglobulin single variable domains binding to different epitopes of A beta. The invention also relates to specific sequences of such polypeptides methods of their production and methods of using them including methods of treatment of diseases such as Alzheimer s Disease.

No. of Pages : 264 No. of Claims : 32

(12) PATENT APPLICATION PUBLICATION
(19) INDIA
(22) Date of filing of Application :05/09/2012
(21) Application No.7723/DELNP/2012 A
(43) Publication Date : 14/03/2014

(54) Title of the invention : LABEL FREE ON TARGET PHARMACOLOGY METHODS

(51) International classification :G06F19/00
(31) Priority Document No :61/315653
(32) Priority Date :19/03/2010
(33) Name of priority country :U.S.A.
(86) International Application No :PCT/US2011/028947
Filing Date :18/03/2011
(87) International Publication No :WO 2011/116260
(61) Patent of Addition to Application Number :NA
Filing Date :NA
(62) Divisional to Application Number :NA
Filing Date :NA

(71)**Name of Applicant :**
1)CORNING INCORPORATED
Address of Applicant :1 Riverfront Plaza Corning New York 14831 U.S.A.
(72)**Name of Inventor :**
1)FANG Ye
2)FERRIE Ann M.

(57) Abstract :
Disclosed are methods and machines to determine on target pharmacology of molecules using label free biosensor cellular assays and label free biosensor integrative pharmacology.

No. of Pages : 77 No. of Claims : 20

(12) PATENT APPLICATION PUBLICATION
(19) INDIA
(22) Date of filing of Application :05/09/2012
(21) Application No.7725/DELNP/2012 A
(43) Publication Date : 14/03/2014

(54) Title of the invention : INKJET PRINTER

(51) International classification :B41J2/175
(31) Priority Document No :12/750738
(32) Priority Date :31/03/2010
(33) Name of priority country :U.S.A.
(86) International Application No :PCT/US2011/028924
Filing Date :18/03/2011
(87) International Publication No :WO 2011/123260
(61) Patent of Addition to Application Number :NA
Filing Date :NA
(62) Divisional to Application Number :NA
Filing Date :NA

(71)**Name of Applicant :**
1)EASTMAN KODAK COMPANY
Address of Applicant :343 State Street Rochester NY 14650 2201 U.S.A.
(72)**Name of Inventor :**
1)MURRAY Richard A.

(57) Abstract :
An inkjet printer includes a carriage guide including a carriage guide direction; an inkjet nozzle array that is movable back and forth along the carriage guide direction; an ink tank for providing ink to the inkjet nozzle array; and a holding receptacle for the ink tank the holding receptacle includes a base surface for supporting the ink supply the base surface including a first end and a second end that is opposite the first end; a latch including a latching member proximate the first end of the base surface for retaining the ink tank in the holding receptacle; and a wall that includes an ink inlet port configured to receive ink from the ink tank wherein the wall is proximate the second end of the base surface.

No. of Pages : 45 No. of Claims : 21

(12) PATENT APPLICATION PUBLICATION
(19) INDIA
(22) Date of filing of Application :05/09/2012
(21) Application No.7727/DELNP/2012 A
(43) Publication Date : 14/03/2014

(54) Title of the invention : METHOD FOR SONIC DOCUMENT CLASSIFICATION

(51) International classification :B65H7/02,G01N29/14
(31) Priority Document No :12/748712
(32) Priority Date :29/03/2010
(33) Name of priority country :U.S.A.
(86) International Application No :PCT/US2011/029505
Filing Date :23/03/2011
(87) International Publication No :WO 2011/123295
(61) Patent of Addition to Application Number :NA
Filing Date :NA
(62) Divisional to Application Number :NA
Filing Date :NA

(71)**Name of Applicant :**
1)EASTMAN KODAK COMPANY
Address of Applicant :343 State Street Rochester NY 14650 2201 U.S.A.
(72)**Name of Inventor :**
1)SCHAERTEL David M.
2)PHINNEY Daniel P.
3)SAKHARSHETE Swapnil

(57) Abstract :
A method to identify and classify a document (5) by weight or thickness based on the sound the document makes while moving through a document transport (30). Using an audio transducer (20) the sound of the document is captured and compared to previously saved and stored characteristics of various weighted documents and then classified when matched to a specific set of characteristics.

No. of Pages : 10 No. of Claims : 7

(12) PATENT APPLICATION PUBLICATION
(19) INDIA
(22) Date of filing of Application :07/09/2012
(21) Application No.7844/DELNP/2012 A
(43) Publication Date : 14/03/2014

(54) Title of the invention : META FORM WHOLLY AROMATIC POLYAMIDE FIBER

(51) International classification :D01F6/60
(31) Priority Document No :NA
(32) Priority Date :NA
(33) Name of priority country :NA
(86) International Application No :PCT/JP2010/055359
Filing Date :26/03/2010
(87) International Publication No :WO 2011/118022
(61) Patent of Addition to Application Number :NA
Filing Date :NA
(62) Divisional to Application Number :NA
Filing Date :NA

(71)**Name of Applicant :**
1)TEIJIN LIMITED
Address of Applicant :6-7 MINAMIHOMMACHI 1-CHOME, CHUO-KU, OSAKA-SHI, OSAKA 5410054, JAPAN
(72)**Name of Inventor :**
1)TAKIUE Kotarou
2)CHIBA Tomoyoshi

(57) Abstract :
Disclosed is a novel meta form wholly aromatic polyamide fiber which retains properties inherent to meta form wholly aromatic polyamide fibers such as heat resistance and flame retardancy has high breaking strength and does not undergo tinting or discoloration under high temperatures. Disclosed is a meta form wholly aromatic polyamide fiber which contains substantially no layered clay mineral contains a remaining solvent in an amount of 1.0 mass% or less and has fiber breaking strength of 4.5 to 6.0 cN/dtex. The fiber can be produced by properly adjusting the composition of or conductions for a coagulating bath so that the fiber has no skin core and has a dense coagulation form carrying out stretching in a plastic state at a specific stretching ratio and properly adjusting the conditions for a subsequent thermal stretching procedure.

No. of Pages : 44 No. of Claims : 3

(12) PATENT APPLICATION PUBLICATION
(19) INDIA
(22) Date of filing of Application :04/09/2012
(21) Application No.7710/DELNP/2012 A
(43) Publication Date : 14/03/2014

(54) Title of the invention : PROCESS FOR MAKING AN EMBOSSED WEB

(51) International classification :A61F13/15,B26F1/24,B26F1/26
(31) Priority Document No :12/721989
(32) Priority Date :11/03/2010
(33) Name of priority country :U.S.A.
(86) International Application No :PCT/US2010/048423
Filing Date :10/09/2010
(87) International Publication No :WO 2011/112213
(61) Patent of Addition to Application Number :NA
Filing Date :NA
(62) Divisional to Application Number :NA
Filing Date :NA

(71)**Name of Applicant :**
1)THE PROCTER & GAMBLE COMPANY
Address of Applicant :One Procter & Gamble Plaza Cincinnati Ohio 45202 U.S.A.
(72)**Name of Inventor :**
1)STONE Keith Joseph
2)GROSS Sarah Beth
3)GILBERTSON Gary Wayne
4)YOUNG Roger Dale
5)COE Richard George

(57) Abstract :
A process for making an embossed web includes providing a precursor web a first forming structure having a plurality of discrete first forming elements and a first pressure source and applying pressure between the first pressure source and the first forming structure to force the precursor web to conform to the first forming elements of to form a first embossed web having a plurality of first discrete extended elements. The first embossed web is then provided between a second forming structure having a plurality of discrete second forming elements and a second pressure source and pressure is applied between the second pressure source and the second forming structure to force the first embossed web to conform to the second forming elements to form a second embossed web having a plurality of second discrete extended elements. The resulting embossed web has a plurality of first and second discrete extended elements.

No. of Pages : 52 No. of Claims : 20

(12) PATENT APPLICATION PUBLICATION
(19) INDIA
(22) Date of filing of Application :07/09/2012
(21) Application No.7835/DELNP/2012 A
(43) Publication Date : 14/03/2014

(54) Title of the invention : STRUCTUALLY SUPPORTED NON PNEUMATIC WHEEL WITH CONTINUOUS LOOP REINFORCEMENT ASSEMBLY

(51) International classification :B60C7/00
(31) Priority Document No :12/661196
(32) Priority Date :12/03/2010
(33) Name of priority country :U.S.A.
(86) International Application No :PCT/US2011/028078
Filing Date :11/03/2011
(87) International Publication No :WO 2011/112920
(61) Patent of Addition to Application Number :NA
Filing Date :NA
(62) Divisional to Application Number :NA
Filing Date :NA

(71)**Name of Applicant :**
1)MICHELIN RECHERCHE ET TECHNIQUE S.A.
Address of Applicant :Route Louis Braille 10 CH 1763 Granges Paccot Switzerland
2)SOCIETE DE TECHNOLOGIE MICHELIN
(72)**Name of Inventor :**
1)DOTSON Michael Edward
2)PETRI Patrick A.
3)VOGT Kirkland W.

(57) Abstract :
A non pneumatic wheel is provided having a continuous loop reinforcement assembly that can support a load and have performance similar to pneumatic tires. Various configurations of a non pneumatic wheel including variations of the continuous loop reinforcement assembly are provided. One or more resilient spacers can be positioned with the continuous loop reinforcement assembly and can be configured for the receipt of a matrix material.

No. of Pages : 35 No. of Claims : 20

(12) PATENT APPLICATION PUBLICATION
(19) INDIA
(22) Date of filing of Application :07/09/2012
(21) Application No.7836/DELNP/2012 A
(43) Publication Date : 14/03/2014

(54) Title of the invention : DISPLAY DEVICE FOR CONSTRUCTION MACHINE

(51) International classification :E02F9/26
(31) Priority Document No :2010065076
(32) Priority Date :19/03/2010
(33) Name of priority country :Japan
(86) International Application No :PCT/JP2011/056002
Filing Date :15/03/2011
(87) International Publication No :WO 2011/115089
(61) Patent of Addition to Application Number :NA
Filing Date :NA
(62) Divisional to Application Number :NA
Filing Date :NA

(71)**Name of Applicant :**
1)KOMATSU LTD.
Address of Applicant :2 3 6 Akasaka Minato ku Tokyo 1078414 Japan
(72)**Name of Inventor :**
1)JINBO Shimon
2)MORINAGA Jun
3)TAKE Hiroaki
4)SUZUKI Kouzou

(57) Abstract :
Disclosed is a display device (18) which comprises a display control unit (68) and displays a content based on a display signal outputted from the display control unit (68). The display control unit (68) is provided with a gage value transformation unit (61) which transforms the state quantities of a plurality of devices expressed in predetermined units to gage values sharing a gage; and a maximum gage value determination unit (62) which determines the maximum gage value of the gage values transformed by the gage value transformation unit (61) such that the gage value determined by the maximum gage value determination unit (62) is displayed.

No. of Pages : 31 No. of Claims : 8

(12) PATENT APPLICATION PUBLICATION
(19) INDIA
(22) Date of filing of Application :07/09/2012
(21) Application No.7837/DELNP/2012 A
(43) Publication Date : 14/03/2014

(54) Title of the invention : METHOD FOR PRODUCING A VEHICLE SEAT FITTING

(51) International classification :B60N2/225,F16C33/08,F16C35/02
(31) Priority Document No :10 2010 013 091.5
(32) Priority Date :22/03/2010
(33) Name of priority country :Germany
(86) International Application No :PCT/EP2010/007375
Filing Date :04/12/2010
(87) International Publication No :WO 2011/116799
(61) Patent of Addition to Application Number :NA
Filing Date :NA
(62) Divisional to Application Number :NA
Filing Date :NA

(71)**Name of Applicant :**
1)KEIPER GMBH & CO. KG
Address of Applicant :Hertelsbrunnenring 2 67657 Kaiserslautern Germany
(72)**Name of Inventor :**
1)JOKIEL Christian
2)LEHMANN Ulrich

(57) Abstract :
In a method for producing a vehicle seat fitting in which a sliding bearing bushing (28) is pressed in the axial direction into a receptacle in a first fitting part (11) wherein the pressed in sliding bearing bushing (28) has a radially protruding securing region (28b) the securing region (28b) is formed before or after the pressing in operation.

No. of Pages : 29 No. of Claims : 10

(12) PATENT APPLICATION PUBLICATION
(19) INDIA
(22) Date of filing of Application :07/09/2012
(21) Application No.7838/DELNP/2012 A
(43) Publication Date : 14/03/2014

(54) Title of the invention : MAGNETIC GATE LATCH

(51) International classification :E05B47/00,E05B55/00,E05C1/12
(31) Priority Document No :61/305032
(32) Priority Date :16/02/2010
(33) Name of priority country :U.S.A.
(86) International Application No :PCT/AU2011/000113
Filing Date :04/02/2011
(87) International Publication No :WO 2011/100782
(61) Patent of Addition to Application Number :NA
Filing Date :NA
(62) Divisional to Application Number :NA
Filing Date :NA

(71)**Name of Applicant :**
1)D & D GROUP PTY LTD
Address of Applicant :Unit 6 4 6 Aquatic Drive Frenchs Forest New South Wales 2086 Australia
(72)**Name of Inventor :**
1)CLARK Anthony John
2)TUN Linn Thu Yein
3)ALEXANDER Justin

(57) Abstract :
A latch (10) has a magnet in one unit and an attracted element (e.g. ferromagnetic structure or another magnet) in second unit with a latching mechanism which operate under magnetic attraction. The latch (10) has an actuator (18) connected to a linkage to cause displacement of the magnet or the attracted element in a direction substantially normal to the axis of pivoting.

No. of Pages : 41 No. of Claims : 22

(12) PATENT APPLICATION PUBLICATION
(19) INDIA
(22) Date of filing of Application :07/09/2012
(21) Application No.7839/DELNP/2012 A
(43) Publication Date : 14/03/2014

(54) Title of the invention : PHOTOCATALYTIC REACTOR AND METHODS OF USE

(51) International classification :B01J19/12,C02F1/32,C02F1/72
(31) Priority Document No :1004443.6
(32) Priority Date :17/03/2010
(33) Name of priority country :U.K.
(86) International Application No :PCT/GB2011/050536
Filing Date :17/03/2011
(87) International Publication No :WO 2011/114164
(61) Patent of Addition to Application Number :NA
Filing Date :NA
(62) Divisional to Application Number :NA
Filing Date :NA

(71)**Name of Applicant :**
1)CATALYSYSTEMS LIMITED
Address of Applicant :302 St Vincent Street Glasgow G2 5RZ U.K.
(72)**Name of Inventor :**
1)FOSTER Neil

(57) Abstract :
The present invention provides an apparatus and method for carrying out a photocatalytic reaction. The apparatus comprises a reaction chamber having a longitudinal axis and comprising a fluid inlet and a fluid outlet displaced in a longitudinal direction. A bearing surface is provided for a layer of mobile photocatalyst particles disposed between the fluid inlet and the fluid outlet and a reactant fluid flowing between the fluid inlet and the fluid outlet contacts the layer of mobile photocatalyst particle. A formation is provided to redirect the fluid flow through the layer of mobile photocatalyst particles to increase the contact of the fluid with the layer of mobile photocatalyst particles.

No. of Pages : 50 No. of Claims : 48

(12) PATENT APPLICATION PUBLICATION
(19) INDIA
(22) Date of filing of Application :07/09/2012
(21) Application No.7846/DELNP/2012 A
(43) Publication Date : 14/03/2014

(54) Title of the invention : SOLID COMPACTED BILAYER PRODUCT FOR WATER PURIFICATION

(51) International classification :C02F1/52,C02F1/76,C02F9/00
(31) Priority Document No :10/51721
(32) Priority Date :10/03/2010
(33) Name of priority country :France
(86) International Application No :PCT/FR2011/050482
Filing Date :10/03/2011
(87) International Publication No :WO 2011/110787
(61) Patent of Addition to Application Number :NA
Filing Date :NA
(62) Divisional to Application Number :NA
Filing Date :NA

(71)**Name of Applicant :**
1)AQUASURE
Address of Applicant :Zac des Peyrardes F 42170 St Just St Rambert France
(72)**Name of Inventor :**
1)BRANLARD Paul
2)SOQUET Valrie

(57) Abstract :
The invention relates to a solid compacted product for water purification comprising: at least a first layer including at least one flocculation system and at least a second layer including at least one disinfectant that releases active chlorine on contact with water. The invention is characterised in that: the flocculation system comprises at least one polyol having a molecular weight less than or equal to 10000 g/mol and at least one densification agent comprising a composition of water insoluble particles which are chemically inactive in relation to the active chlorine and which have a particle size such that 80% of the mass of the densification agent is formed by particles having an average size of between 5µm and 80 µm. The invention also relates to the method for preparing one such product and to a method for purifying a volume of water.

No. of Pages : 34 No. of Claims : 22

(12) PATENT APPLICATION PUBLICATION
(19) INDIA
(22) Date of filing of Application :07/09/2012
(21) Application No.7847/DELNP/2012 A
(43) Publication Date : 14/03/2014

(54) Title of the invention : SMOKING ARTICLE WITH HEAT RESISTANT SHEET MATERIAL

(51) International classification :A24B15/16,A24D1/02,A24F47/00
(31) Priority Document No :10250601.1
(32) Priority Date :26/03/2010
(33) Name of priority country :EPO
(86) International Application No :PCT/IB2011/001147
Filing Date :28/03/2011
(87) International Publication No :WO 2011/117750
(61) Patent of Addition to Application Number :NA
Filing Date :NA
(62) Divisional to Application Number :NA
Filing Date :NA

(71)**Name of Applicant :**
1)PHILIP MORRIS PRODUCTS S.A.
Address of Applicant :Quai Jeanrenaud 3 CH 2000 Neuchatel Switzerland
(72)**Name of Inventor :**
1)POGET Laurent
2)MALGAT Alexandre
3)SORG Christoph
4)HOFENAUER Andreas
5)CROLL David
6)GERICKE Ralf

(57) Abstract :
A smoking article includes a sheet material (10) comprising a fibrous layer (12) formed of cellulosic fibres and at least 50% by weight of inorganic filler material having a particle size in range of from 0.1 microns and 50 microns wherein the sheet material has a tensile strength of at least 900 N/m. The fibrous layer (12) preferably further comprises a binder material preferably an organic binder material such as a cellulosic binder material. A coating layer (16) may be provided on at least one side of the fibrous layer 12).

No. of Pages : 14 No. of Claims : 15

(12) PATENT APPLICATION PUBLICATION
(19) INDIA
(22) Date of filing of Application :07/09/2012
(21) Application No.7848/DELNP/2012 A
(43) Publication Date : 14/03/2014

(54) Title of the invention : SYSTEMS AND METHODS FOR POSITIONING FLEXIBLE FLOATING PHOTOBIOREACTORS

(51) International classification :C12M1/09,C12M3/00
(31) Priority Document No :61/313474
(32) Priority Date :12/03/2010
(33) Name of priority country :U.S.A.
(86) International Application No :PCT/US2011/028207
Filing Date :11/03/2011
(87) International Publication No :WO 2011/113006
(61) Patent of Addition to Application Number :NA
Filing Date :NA
(62) Divisional to Application Number :NA
Filing Date :NA

(71)**Name of Applicant :**
1)SOLIX BIOSYSTEMS INC.
Address of Applicant :500 East Vine Drive Fort Collins Colorado 80524 U.S.A.
2)COLORADO STATE UNIVERSITY RESEARCH FOUNDATION
(72)**Name of Inventor :**
1)TURNER Christopher Wayne
2)MCCARTY Bryan Rhea
3)LETVIN Peter Allen
4)WILLSON Bryan Dennis
5)HERBOLDSHEIMER Daniel Robert

(57) Abstract :
A top reference photobioreactor system according to an embodiment of the present invention includes a flexible floating photobioreactor having a buoyancy tube filled with a gas that is less dense and a ballast tube filled with a substance such as saltwater that is more dense than the liquid in which the photobioreactor floats. A top reference photobioreactor method according to an embodiment of the present invention includes controlling a depth of the top reference photobioreactor by controlling a volume and/or density of ballast in the ballast tube and/or by controlling a volume and/or density of gas in the buoyancy tube.

No. of Pages : 39 No. of Claims : 26

(12) PATENT APPLICATION PUBLICATION
(19) INDIA
(22) Date of filing of Application :07/09/2012
(21) Application No.7849/DELNP/2012 A
(43) Publication Date : 14/03/2014

(54) Title of the invention : SURVEYING METHOD

(51) International classification :G01C1/04,G01C15/00
(31) Priority Document No :10162447.6
(32) Priority Date :10/05/2010
(33) Name of priority country :EPO
(86) International Application No :PCT/EP2011/057473
Filing Date :10/05/2011
(87) International Publication No :WO 2011/141447
(61) Patent of Addition to Application Number :NA
Filing Date :NA
(62) Divisional to Application Number :NA
Filing Date :NA

(71)**Name of Applicant :**
1)LEICA GEOSYSTEMS AG
Address of Applicant :Heinrich Wild Strasse CH 9435 Heerbrugg Switzerland
(72)**Name of Inventor :**
1)METZLER Bernhard

(57) Abstract :
The invention concerns a surveying method for measuring an object wherein the object belongs to a group of known types of objects and determining an object representing point corresponding to the type of the object by a surveying instrument (1) with means for measuring distances and angles and a camera comprising the steps of: determining a series of points (6e 6f 6g) at an object (21 27) by measuring distances and angles to the points in a defined angle area analysing the spatial distribution of the points and based thereon assigning relevant points to a first group of points (6e) identifying the type of the object (21) on the basis of the first group of points (6e) capturing an image of the object (21) extracting a contour of the object (21) from the image by use of an image processing method fitting at least one space curve to the object on the basis of the first group of points and the extracted contour and determining the coordinates of the object representing point from the fitted space curve.

No. of Pages : 30 No. of Claims : 14

(12) PATENT APPLICATION PUBLICATION
(19) INDIA
(22) Date of filing of Application :05/09/2012
(21) Application No.7728/DELNP/2012 A
(43) Publication Date : 14/03/2014

(54) Title of the invention : DENTURE ADHESIVE COMPOSITIONS

(51) International classification :A61K6/00
(31) Priority Document No :61/312275
(32) Priority Date :10/03/2010
(33) Name of priority country :U.S.A.
(86) International Application No :PCT/US2011/027669
Filing Date :09/03/2011
(87) International Publication No :WO 2011/112664
(61) Patent of Addition to Application Number :NA
Filing Date :NA
(62) Divisional to Application Number :NA
Filing Date :NA

(71)**Name of Applicant :**
1)THE PROCTER & GAMBLE COMPANY
Address of Applicant :One Procter & Gamble Plaza Cincinnati Ohio 45202 U.S.A.
(72)**Name of Inventor :**
1)RAJAIAH Jayanth
2)LEONARD Robert Scott
3)BRAS Rafael Edmundo
4)MEDEIROS Franco Silva

(57) Abstract :
Denture adhesive compositions having good hold and improved taste containing a salt of a copolymer of alkyl vinyl ether maleic acid or anhydride. Compositions containing from about 25% to about 45% by weight of the composition of a salt of a copolymer of alkyl vinyl ether maleic acid or anhydride containing a cationic salt function containing: i) from about 60% to about 72% cations selected from calcium strontium magnesium or combinations thereof; ii) from 0% to about 10% sodium cations; iii) less than 1% zinc cations; and iv) from about 25% to about 40% of a free acid component; and further containing from about 15% to about 25% by weight of the composition of a carboxymethyl cellulose having a molecular weight of from about 200 000 to about 1 000 000 daltons; and a carrier. Methods of improving the adhesion of dentures to the oral cavity by applying such compositions to dentures the oral cavity or both and thereafter securing the denture to the ridge or palate of the oral cavity.

No. of Pages : 32 No. of Claims : 15

(12) PATENT APPLICATION PUBLICATION
(19) INDIA
(22) Date of filing of Application :05/09/2012
(21) Application No.7729/DELNP/2012 A
(43) Publication Date : 14/03/2014

(54) Title of the invention : MOLD TOOL ASSEMBLY INCLUDING RESIN RETAINING DEVICE LOCATED RELATIVE TO STEM TIP PORTION

(51) International classification :B29C45/20
(31) Priority Document No :61/320789
(32) Priority Date :05/04/2010
(33) Name of priority country :U.S.A.
(86) International Application No :PCT/US2011/029693
Filing Date :24/03/2011
(87) International Publication No :WO 2011/126750
(61) Patent of Addition to Application Number :NA
Filing Date :NA
(62) Divisional to Application Number :NA
Filing Date :NA

(71)**Name of Applicant :**
1)HUSKY INJECTION MOLDING SYSTEMS LTD
Address of Applicant :500 Queen Street South Bolton Ontario L7E 5S5 Canada
(72)**Name of Inventor :**
1)JENKO Edward Joseph

(57) Abstract :
A mold tool assembly (100) including a stem tip portion (102) and also including a resin retaining device (104) being located relative to the stem tip portion (102).

No. of Pages : 17 No. of Claims : 12

(12) PATENT APPLICATION PUBLICATION
(19) INDIA
(22) Date of filing of Application :05/09/2012
(21) Application No.7730/DELNP/2012 A
(43) Publication Date : 14/03/2014

(54) Title of the invention : MOLD TOOL ASSEMBLY HAVING NOZZLE ASSEMBLIES TO PROVIDE RESINS MOLDED ADJACENTLY

(51) International classification :A21C3/00
(31) Priority Document No :61/318852
(32) Priority Date :30/03/2010
(33) Name of priority country :U.S.A.
(86) International Application No :PCT/US2011/029128
Filing Date :21/03/2011
(87) International Publication No :WO 2011/123271
(61) Patent of Addition to Application Number :NA
Filing Date :NA
(62) Divisional to Application Number :NA
Filing Date :NA

(71)**Name of Applicant :**
1)HUSKY INJECTION MOLDING SYSTEMS LTD
Address of Applicant :500 Queen Street South Bolton Ontario L7E 5S5 Canada
(72)**Name of Inventor :**
1)BAUMANN Martin

(57) Abstract :
A mold tool assembly (100) comprising: a first nozzle assembly (110) being configured to provide a first resin (112) to a first mold cavity (114); and a second nozzle assembly (116) being configured to provide a second resin (118) to a second mold cavity (120) the second resin (118) being provided adjacent to the first resin (112).

No. of Pages : 15 No. of Claims : 8

(12) PATENT APPLICATION PUBLICATION
(19) INDIA
(22) Date of filing of Application :05/09/2012
(21) Application No.7731/DELNP/2012 A
(43) Publication Date : 14/03/2014

(54) Title of the invention : HEAD RESTRAINT IN PARTICULAR FOR A MOTOR VEHICLE

(51) International classification :B60N2/48
(31) Priority Document No :10 2010 010 537.6
(32) Priority Date :05/03/2010
(33) Name of priority country :Germany
(86) International Application No :PCT/EP2011/000093
Filing Date :12/01/2011
(87) International Publication No :WO 2011/107182
(61) Patent of Addition to Application Number :NA
Filing Date :NA
(62) Divisional to Application Number :NA
Filing Date :NA

(71)**Name of Applicant :**
1)JOHNSON CONTROLS GMBH
Address of Applicant :Industriestrasse 20 30 51399 Burscheid Germany
(72)**Name of Inventor :**
1)GNTHER Benjamin
2)STEIN Alexander

(57) Abstract :
The invention relates to a head restraint for a vehicle seat in particular for a motor vehicle seat wherein the head restraint has a cushion part facing the head of a seat occupant a main body and a comfort adjustment device wherein in a usage situation of the head restraint the cushion part can be adjusted relative to the main body from a first position that is farther from the head of the seat occupant to a second position that is closer to the head of the occupant by means of the comfort adjustment device wherein the cushion part can also be adjusted from the second position in the direction of the first position by means of the comfort adjustment device wherein this requires a front extreme position of the cushion part to be set.

No. of Pages : 14 No. of Claims : 6

(12) PATENT APPLICATION PUBLICATION
(19) INDIA
(22) Date of filing of Application :05/09/2012
(21) Application No.7732/DELNP/2012 A
(43) Publication Date : 14/03/2014

(54) Title of the invention : HIGH PRESSURE LUBRICATION ROLLING METHOD

(51) International classification :B21B1/22,B21B3/02,C10M171/02
(31) Priority Document No :2010134104
(32) Priority Date :11/06/2010
(33) Name of priority country :Japan
(86) International Application No :PCT/JP2010/073646
Filing Date :20/12/2010
(87) International Publication No :WO 2011/155094
(61) Patent of Addition to Application Number :NA
Filing Date :NA
(62) Divisional to Application Number :NA
Filing Date :NA

(71)**Name of Applicant :**
1)NIPPON STEEL & SUMITOMO METAL CORPORATION
Address of Applicant :6-1 , MARUNOUCHI 2-CHOME, CHIYODA-KU, TOKYO 100-8071, JAPAN
(72)**Name of Inventor :**
1)OHNO Akira
2)FUJITA Tamio
3)NISHIMURA Shinya

(57) Abstract :
In the disclosed method of cold rolling an acid washed stainless steel plate a lubricant is used having a viscosity of 140 cst or higher at 40C and with one rolling stand rolling is performed with a 30% or greater rolling reduction rate at least.

No. of Pages : 38 No. of Claims : 38

(12) PATENT APPLICATION PUBLICATION
(19) INDIA
(22) Date of filing of Application :07/09/2012
(21) Application No.7850/DELNP/2012 A
(43) Publication Date : 14/03/2014

(54) Title of the invention : METHOD AND SYSTEM FOR DETERMINING SETTINGS FOR DEEP BRAIN STIMULATION

(51) International classification :A61N1/36,A61N1/05
(31) Priority Document No :10153466.7
(32) Priority Date :12/02/2010
(33) Name of priority country :EPO
(86) International Application No :PCT/IB2011/050456
Filing Date :02/02/2011
(87) International Publication No :WO 2011/098937
(61) Patent of Addition to Application Number :NA
Filing Date :NA
(62) Divisional to Application Number :NA
Filing Date :NA

(71)**Name of Applicant :**
1)SAPIENS STEERING BRAIN STIMULATION B.V.
Address of Applicant :High Tech Campus 41 NL 5656 AE Eindhoven Netherlands
(72)**Name of Inventor :**
1)MARTENS Hubert Ccile Fran§ois
2)DECRE Michel Marcel Jose
3)DOLAN Kevin Thomas

(57) Abstract :
A method and control system for determining and applying stimulation settings for a brain stimulation probe (10 12) is provided. The brain stimulation probe (10 12) comprises a plurality of stimulation electrodes (11). The method comprises for multiple stimulation electrodes (11) of the plurality of stimulation electrodes (11): applying a test current and determining a corresponding patient response determining a volume of influence based (32 52 71 91) on the test current and a position of the stimulation electrode (11) combining the volume of influence (32 52 71 91) and the corresponding patient response with generalized anatomic knowledge of stimulation induced behavior for associating the volume of influence (32 52 71 91) to an anatomic structure (33 43 53) and determining an intersection (41 51) of the volume of influence (32 52 71 91) and the associated anatomic structure (33 43 53). Then based on the determined intersections (41 51) an optimal stimulation volume and corresponding stimulation settings for the brain stimulation probe (10 12) are determined.

No. of Pages : 27 No. of Claims : 9

(12) PATENT APPLICATION PUBLICATION
(19) INDIA
(22) Date of filing of Application :05/09/2012
(21) Application No.7741/DELNP/2012 A
(43) Publication Date : 14/03/2014

(54) Title of the invention : SWITCHED MODE POWER SUPPLY WITH VOLTAGE REGULATOR

(51) International classification :H02M3/335,H02M1/36
(31) Priority Document No :NA
(32) Priority Date :NA
(33) Name of priority country :NA
(86) International Application No :PCT/EP2010/054192
Filing Date :30/03/2010
(87) International Publication No :WO 2011/120558
(61) Patent of Addition to Application Number :NA
Filing Date :NA
(62) Divisional to Application Number :NA
Filing Date :NA

(71)**Name of Applicant :**
1)TELEFONAKTIEBOLAGET LM ERICSSON (publ)
Address of Applicant :S 164 83 Stockholm Sweden
(72)**Name of Inventor :**
1)PERSSON Oscar
2)APPELBERG Mikael

(57) Abstract :
To ensure the reliable turn on of an SMPS in which the same transformer is used for providing power from the primary side to both the main output of the SMPS and a secondary side voltage regulator a train of voltage pulses are transmitted from the primary side to the secondary side the voltage regulator generates a feedback signal indicating when it has turned on and is operating and the transmission of pulses within the train is controlled based on the detection of feedback signal. In this way only the required amount of power to switch on the voltage regulator is transferred to the secondary side during a start up operation and excess power at the main output is prevented thereby avoiding distortion of the desired start up ramp figure.

No. of Pages : 43 No. of Claims : 13

(12) PATENT APPLICATION PUBLICATION
(19) INDIA
(22) Date of filing of Application :07/09/2012

(21) Application No.7854/DELNP/2012 A
(43) Publication Date : 14/03/2014

(54) Title of the invention : CONTACTS MEANS FOR ATTACHING AN END OF A SCHIELDED CABLE

(51) International classification :H01R13/58,H01R9/03
(31) Priority Document No :10 2010 002 176.8
(32) Priority Date :22/02/2010
(33) Name of priority country :Germany
(86) International Application No :PCT/EP2011/052116
Filing Date :14/02/2011
(87) International Publication No :WO 2011/101308
(61) Patent of Addition to Application Number :NA
Filing Date :NA
(62) Divisional to Application Number :NA
Filing Date :NA

(71)**Name of Applicant :**
1)TYCO ELECTRONICS AMP GMBH
Address of Applicant :Amperestrasse 12 14 64625 Bensheim Germany
(72)**Name of Inventor :**
1)HEIN Stefan
2)SZELAG Martin
3)HESS Karl Heinz
4)SCHMITT Martin
5)FELDMANN Dennis
6)SCHENK Hermann
7)PFEFFER Achim
8)GERLACH Thomas
9)THIRUNAVUKKARASU Niranjan

(57) Abstract :
The invention relates to a contact means (100) for attaching an end of a cable (110). The contact means (100) has a casing (300) with an inner chamber (320) for receiving a section of the cable (110) in the region of the cable end and a pull relief element (200 201 202 203) which can be fastened to the casing (300) in the inner chamber (320) with a pull relief section (220 221 222 223) and at least one contacting section (240 241). The pull relief section (220 221 222 223) is formed to fix a cable sheath (120) of the cable (110). The contacting section (240 241) is formed to contact a shield (130) of the cable (110).

No. of Pages : 54 No. of Claims : 15

(12) PATENT APPLICATION PUBLICATION
(19) INDIA
(22) Date of filing of Application :07/09/2012
(21) Application No.7855/DELNP/2012 A
(43) Publication Date : 14/03/2014

(54) Title of the invention : INTRAMEDULLARY NAIL AIMING DEVICE

(51) International classification :A61B17/17
(31) Priority Document No :61/325913
(32) Priority Date :20/04/2010
(33) Name of priority country :U.S.A.
(86) International Application No :PCT/US2011/033018
Filing Date :19/04/2011
(87) International Publication No :WO 2011/133528
(61) Patent of Addition to Application Number :NA
Filing Date :NA
(62) Divisional to Application Number :NA
Filing Date :NA

(71)**Name of Applicant :**
1)SYNTHES GMBH
Address of Applicant :Eimattstrasse 3 CH 4436 Oberdorf, Switzerland
2)NA
(72)**Name of Inventor :**
1)OVERES Tom

(57) Abstract :
An aiming plate for orienting tools toward target features of an implant. The aiming plate features a first and a second surface and has a reversible attachment mechanism for attaching to an implant to orientate one of the first and second surfaces to face the implant. The aiming plate also features first and second through holes. The first through hole for receiving a tool extends along a first hole axis from the first surface to the second surface. The second through hole for receiving a tool is positioned adjacent the first through hole and extends along a second hole axis from the first surface to the second surface. The through holes arranged so that the first hole axis is divergent with respect to the second hole axis.

No. of Pages : 30 No. of Claims : 19

(12) PATENT APPLICATION PUBLICATION
(19) INDIA
(22) Date of filing of Application :07/09/2012
(21) Application No.7856/DELNP/2012 A
(43) Publication Date : 14/03/2014

(54) Title of the invention : CYLINDER HEAD

(51) International classification :F02F1/42
(31) Priority Document No :A 442/2010
(32) Priority Date :18/03/2010
(33) Name of priority country :Austria
(86) International Application No :PCT/EP2011/053634
Filing Date :10/03/2011
(87) International Publication No :WO 2011/113747
(61) Patent of Addition to Application Number :NA
Filing Date :NA
(62) Divisional to Application Number :NA
Filing Date :NA

(71)**Name of Applicant :**
1)AVL LIST GMBH
Address of Applicant :Hans List Platz 1 A 8020 Graz Austria
(72)**Name of Inventor :**
1)GLANZ Reinhard
2)SUPPAN Manfred
3)SCHWARZL Markus
4)KORES Markus

(57) Abstract :
The invention relates to a cylinder head (1) for an internal combustion engine comprising an inlet channel arrangement (3) having at least two inlet openings (6 7) per cylinder (2) which are at approximately the same distance away from a lateral inlet Hange surface (8). A first inlet channel (4) embodied as a spiral channel leads to the first inlet opening (6) and a second inlet channel (5) leads to the second inlet opening (7) and both inlet channels (4 5) are separated from each other by a separation wall (15) from the outside of the cylinder area and a reference angle (Φ) of between 230° and 330° is defined in the direction of a swirling flow in the cylinder (2) between a reference line (12) joining the centre of the valve (6a) of the first inlet opening (6) and the centre of the cylinder (10) and a radius (13) starting form the centre of the valve (6a) of the first inlet opening (6) determining a first inlet cross section (13) of the first inlet channel (4) in a valve chamber (14). As a result the elements can be compact when the first inlet channel (4) is formed essentially straight and extends essentially normally to the inlet flange surface (8).

No. of Pages : 11 No. of Claims : 11

(12) PATENT APPLICATION PUBLICATION
(19) INDIA
(22) Date of filing of Application :05/09/2012
(21) Application No.7743/DELNP/2012 A
(43) Publication Date : 14/03/2014

(54) Title of the invention : FILTER SYSTEM

(51) International classification :B01D46/44,B01D46/02
(31) Priority Document No :10153962.5
(32) Priority Date :18/02/2010
(33) Name of priority country :EPO
(86) International Application No :PCT/IB2011/000114
Filing Date :25/01/2011
(87) International Publication No :WO 2011/101715
(61) Patent of Addition to Application Number :NA
Filing Date :NA
(62) Divisional to Application Number :NA
Filing Date :NA

(71)**Name of Applicant :**
1)ALSTOM TECHNOLOGY LTD
Address of Applicant :Brown Boveri Strasse 7 CH 5400 Baden Switzerland
(72)**Name of Inventor :**
1)ANDERSSON Rune Sten
2)HJELMBERG Anders Erik Martin

(57) Abstract :
The present disclosure relates to a fabric filter system which may be used for removing particulate matter from a gas such as a combustion process gas. The fabric filter system includes fabric filters (3) in a filter module. From the fabric filters (3) gas flows through a filter plenary space (5) and into an outlet duct (7). A flow control device (17) controls the amount of gas flowing into and through the outlet duct (7). The flow control device (17) comprises a guillotine type damper (17). The guillotine type damper (17) provides reliable and efficient control of the gas flow from the filter plenary space (5) into the outlet duct (7). A collar (21) fluidly connecting the filter plenary space with the outlet duct improves the gas flow into the outlet duct (7).

No. of Pages : 13 No. of Claims : 7

(12) PATENT APPLICATION PUBLICATION
(19) INDIA
(22) Date of filing of Application :05/09/2012
(21) Application No.7744/DELNP/2012 A
(43) Publication Date : 14/03/2014

(54) Title of the invention : PHARMACEUTICAL COMPOSITIONS OF GROWTH HORMONE SECRETAGOGUE RECEPTOR LIGANDS

(51) International classification :A61K38/08,A61K38/04
(31) Priority Document No :61/340290
(32) Priority Date :15/03/2010
(33) Name of priority country :U.S.A.
(86) International Application No :PCT/US2011/028283
Filing Date :14/03/2011
(87) International Publication No :WO 2011/115871
(61) Patent of Addition to Application Number :NA
Filing Date :NA
(62) Divisional to Application Number :NA
Filing Date :NA

(71)**Name of Applicant :**
1)IPSEN PHARMA S.A.S.
Address of Applicant :65 Quai Georges Gorse F 95100 Boulogne billancourt France
(72)**Name of Inventor :**
1)DONG Zheng Xin
2)ZHANG Jundong

(57) Abstract :
The present invention relates to improvements in compositions containing peptides that are ligands of the GHS receptor or pharmaceutically acceptable salts thereof methods for preparing such compositions and methods of using such compositions to treat mammals. In particular the present invention relates to a pharmaceutical composition comprising a pamoate salt of H Inp D Bal D Trp Phe Apc NH2 which is a ligand of the GHS receptor and in which after subcutaneous or intramuscular administration to a subject the peptide forms an depot at physiological pH that is slowly dissolved and released into the body fluid and bloodstream. The present invention may further comprise an organic component such as dimethylacetamide (DMA) or polyethylene glycol with an average molecular weight of lower than 1000.

No. of Pages : 31 No. of Claims : 31

(12) PATENT APPLICATION PUBLICATION
(19) INDIA
(22) Date of filing of Application :05/09/2012
(21) Application No.7746/DELNP/2012 A
(43) Publication Date : 14/03/2014

(54) Title of the invention : HIGH SURFACE AREA FIBROUS SILICA NANOPARTICLES

(51) International classification :B01J37/00,C01B33/12,C09C1/30
(31) Priority Document No :61/309721
(32) Priority Date :02/03/2010
(33) Name of priority country :U.S.A.
(86) International Application No :PCT/IB2010/002421
Filing Date :07/09/2010
(87) International Publication No :WO 2011/107822
(61) Patent of Addition to Application Number :NA
Filing Date :NA
(62) Divisional to Application Number :NA
Filing Date :NA

(71)**Name of Applicant :**
1)KING ABDULLAH UNIVERSITY OF SCIENCE AND TECHNOLOGY
Address of Applicant :P. O. Box 55455 Jeddah 21534 Saudi Arabia
(72)**Name of Inventor :**
1)POLSHETTIWAR Vivek
2)BASSET Jean Marie

(57) Abstract :
Disclosed are high surface area nanoparticles that have a fibrous morphology. The nanoparticles have a plurality of fibers wherein each fiber is in contact with one other fiber and each fiber has a length of between about 1 ran and about 5000 nm. Also disclosed are applications of the nanoparticles of the present invention and methods of fabrication of the nanoparticles of the present invention.

No. of Pages : 39 No. of Claims : 52

(12) PATENT APPLICATION PUBLICATION
(19) INDIA
(22) Date of filing of Application :05/09/2012
(21) Application No.7747/DELNP/2012 A
(43) Publication Date : 14/03/2014

(54) Title of the invention : CONTAINER FOR STORING WASTE

(51) International classification :G21F9/22,G21F9/36,G21F5/005
(31) Priority Document No :10 2010 003 289.1
(32) Priority Date :25/03/2010
(33) Name of priority country :Germany
(86) International Application No :PCT/EP2011/054549
Filing Date :24/03/2011
(87) International Publication No:WO 2011/117354
(61) Patent of Addition to Application Number :NA
Filing Date :NA
(62) Divisional to Application Number :NA
Filing Date :NA

(71)**Name of Applicant :**
1)ALD VACUUM TECHNOLOGIES GMBH
Address of Applicant :Wilhelm Rohn Strae 35 63450 Hanau Germany
(72)**Name of Inventor :**
1)HROVAT Milan
2)SEEMANN Richard
3)GROSSE Karl Heinz

(57) Abstract :
The invention relates to a container for storing radioactive waste said container being suitable for secure ultra long final storage comprising a moisture impermeable corrosion resistant graphite matrix and comprising waste products which are encased in metal and which are embedded into the matrix. The invention also relates to a method for producing such containers.

No. of Pages : 20 No. of Claims : 14

(12) PATENT APPLICATION PUBLICATION
(19) INDIA
(22) Date of filing of Application :10/09/2012
(21) Application No.7867/DELNP/2012 A
(43) Publication Date : 14/03/2014

(54) Title of the invention : GUTTER BROOM AND GUTTER BROOM SYSTEM

(51) International classification :E01H1/02
(31) Priority Document No :61/303038
(32) Priority Date :10/02/2010
(33) Name of priority country :U.S.A.
(86) International Application No :PCT/CA2011/000161
Filing Date :10/02/2011
(87) International Publication No :WO 2011/097710
(61) Patent of Addition to Application Number :NA
Filing Date :NA
(62) Divisional to Application Number :NA
Filing Date :NA

(71)**Name of Applicant :**
1)VANDERLINDEN Roger
Address of Applicant :1100 Burloak Drive Suite 300 Burlington Ontario L7L 6B2 Canada
(72)**Name of Inventor :**
1)VANDERLINDEN Roger

(57) Abstract :
A gutter broom system comprises a gutter broom that comprises a main structural body a plurality of sweeping bristles depending from the main structural body at least one opening in the main structural body for permitting a blast of air to pass through the main structural body as the gutter broom rotates. A gutter broom shroud is in surrounding relation to the gutter broom and defines a substantially hollow interior that receives the gutter broom. An air blast nozzle has an air outlet and is operatively mounted on one of the gutter broom shroud the mounting means and the surface cleaning vehicle such that the air outlet is generally downwardly facing for emitting a blast of air through the at least one opening in the main structural body towards the surface being cleaned to thereby clean dirt from the surface being cleaned.

No. of Pages : 17 No. of Claims : 12

(12) PATENT APPLICATION PUBLICATION
(19) INDIA
(22) Date of filing of Application :05/09/2012
(21) Application No.7748/DELNP/2012 A
(43) Publication Date : 14/03/2014

(54) Title of the invention : METHOD FOR GENERATING A LOAD SHARING VECTOR

(51) International classification :H04L12/56
(31) Priority Document No :NA
(32) Priority Date :NA
(33) Name of priority country :NA
(86) International Application No :PCT/EP2010/055123
Filing Date :19/04/2010
(87) International Publication No :WO 2011/131224
(61) Patent of Addition to Application Number :NA
Filing Date :NA
(62) Divisional to Application Number :NA
Filing Date :NA

(71)**Name of Applicant :**
1)TELEFONAKTIEBOLAGET L M ERICSSON (PUBL)
Address of Applicant :S 164 83 Stockholm Sweden
(72)**Name of Inventor :**
1)DRENSKI Bernardin
2)SCHEURICH Jan
3)SAUERMANN J¼rgen

(57) Abstract :
The invention relates to a method for generating a load sharing vector indicating a plurality of communication targets for load sharing in a communication network. The method comprises providing (101) a target distribution vector comprising a first number of entries indicating a first communication target and comprising a second number of entries indicating a second communication target and generating (103) the load sharing vector upon the basis of active entries of the target distribution vector the active entries indicating the communication target of the first or the second communication target which is available for load sharing in the communication network.

No. of Pages : 44 No. of Claims : 22

(12) PATENT APPLICATION PUBLICATION
(19) INDIA
(22) Date of filing of Application :05/09/2012
(21) Application No.7749/DELNP/2012 A
(43) Publication Date : 14/03/2014

(54) Title of the invention : A BREAST PROTECTIVE SYSTEM AND ORTHOSIS THEREFOR

(51) International classification :A61F5/03,A47G9/00
(31) Priority Document No :61/309758
(32) Priority Date :02/03/2010
(33) Name of priority country :U.S.A.
(86) International Application No :PCT/AU2011/000233
Filing Date :02/03/2011
(87) International Publication No :WO 2011/106836
(61) Patent of Addition to Application Number :NA
Filing Date :NA
(62) Divisional to Application Number :NA
Filing Date :NA

(71)**Name of Applicant :**
1)EVANS Paul
Address of Applicant :44 Mayfield Drive Mount Waverly Victoria 3149 Australia
(72)**Name of Inventor :**
1)EVANS Paul

(57) Abstract :
An orthosis (protective pad) for placing on a supporting surface to lie adjacent the breasts of a subject lying prone on the surface the orthosis comprising: (a) a central portion extending along a longitudinal axis of the orthosis to be receivable between the breasts of the subject to support the sternum; and (b) opposed portions extending bilaterally outwardly from a cephalad end of the central portion to support the clavicle and/or upper ribcage/costal cartilage (cephalad portions); and/or (c) opposed portions extending bilaterally outwardly from a caudal end of the central portion to support the lower ribcage/costal cartilage and/or upper abdomen (caudal portions) the portions being configured such that spaces are defined laterally outward of the longitudinal axis and the breasts are displaced laterally and/or superolaterally to occupy the spaces.

No. of Pages : 51 No. of Claims : 15

(12) PATENT APPLICATION PUBLICATION
(19) INDIA
(22) Date of filing of Application :05/09/2012
(21) Application No.7750/DELNP/2012 A
(43) Publication Date : 14/03/2014

(54) Title of the invention : SPEED REDUCTION MECHANISM MOTOR WITH SPEED REDUCTION MECHANISM AND METHOD FOR PRODUCING SPEED REDUCTION MECHANISM

(51) International classification :F16H1/16,F16H55/17,H02K7/116
(31) Priority Document No :2010068383
(32) Priority Date :24/03/2010
(33) Name of priority country :Japan
(86) International Application No :PCT/JP2011/056035
Filing Date :15/03/2011
(87) International Publication No :WO 2011/118448
(61) Patent of Addition to Application Number :NA
Filing Date :NA
(62) Divisional to Application Number :NA
Filing Date :NA

(71)**Name of Applicant :**
1)ASMO CO. LTD.
Address of Applicant :390 Umeda Kosai shi Shizuoka 4310493 Japan
(72)**Name of Inventor :**
1)HORIKAWA Masaya
2)YAGI Hideyuki
3)SOGA Itaru

(57) Abstract :
According to the present disclosures in the type of speed reduction mechanism of which by means of rotation under conditions wherein the angle of obliquity of a worm and a worm wheel are the same as each other the number of meshed teeth is normally n+1 or varies between n+1 and n (where n is a natural number) the angle of obliquity of the worm is set to be greater than that of the worm wheel in a manner so that the maximum number of meshed teeth becomes no greater than n.

No. of Pages : 33 No. of Claims : 5

(12) PATENT APPLICATION PUBLICATION
(19) INDIA
(22) Date of filing of Application :10/09/2012
(21) Application No.7870/DELNP/2012 A
(43) Publication Date : 14/03/2014

(54) Title of the invention : ACCESS CONTROL FOR MACHINE TYPE COMMUNICATION DEVICES

(51) International classification :H04W48/02
(31) Priority Document No :61/317910
(32) Priority Date :26/03/2010
(33) Name of priority country :U.S.A.
(86) International Application No :PCT/IB2011/051209
Filing Date :22/03/2011
(87) International Publication No :WO 2011/117823
(61) Patent of Addition to Application Number :NA
Filing Date :NA
(62) Divisional to Application Number :NA
Filing Date :NA

(71)**Name of Applicant :**
1)TELEFONAKTIEBOLAGET L M ERICSSON (PUBL)
Address of Applicant :S 164 83 Stockholm Sweden
(72)**Name of Inventor :**
1)DIACHINA John
2)SCHLIWA BERTLING Paul
3)BERGSTR–M Andreas
4)PERSSON Claes Gran

(57) Abstract :
A device type dependent approach to access control is used to independently control network access by machine type communication (MTC) and non MTC devices. A plurality of access classes are defined for each device type. The base station selectively controls access to the network by each device type by sending an access control mask for each defined device type to the wireless terminals within the network.

No. of Pages : 24 No. of Claims : 20

(12) PATENT APPLICATION PUBLICATION
(19) INDIA
(22) Date of filing of Application :10/09/2012
(21) Application No.7871/DELNP/2012 A
(43) Publication Date : 14/03/2014

(54) Title of the invention : JOINT STRUCTURE AND WIND REGULATOR

(51) International classification :B21D39/00,B60J1/17,E05F11/38
(31) Priority Document No :2010091336
(32) Priority Date :12/04/2010
(33) Name of priority country :Japan
(86) International Application No :PCT/JP2010/073510
Filing Date :27/12/2010
(87) International Publication No :WO 2011/129033
(61) Patent of Addition to Application Number :NA
Filing Date :NA
(62) Divisional to Application Number :NA
Filing Date :NA

(71)**Name of Applicant :**
1)SHIROKI CORPORATION
Address of Applicant :2 Kirihara cho Fujisawa shi Kanagawa 2520811 Japan
(72)**Name of Inventor :**
1)NAGAI Kosuke
2)KAMIURA Tomohiro

(57) Abstract :
A joint structure and a wind regulator having high separation strength. A lift arm (5) is provided with: a tapered through hole (35) which has formed thereon a first inner wall section (33) work hardened by plastic deformation; and a raised section (45) which has an inner wall surface (41) interconnected with an inner wall surface (31) of the tapered through hole (35) and which has formed thereon a second inner wall section (43) work hardened by plastic deformation. A protrusion (51) is formed on a driven gear (3). The protrusion (51) is fitted from the tapered through hole (35) up to the raised section (45) has an outer wall section (53) work hardened by plastic deformation and has an outer wall surface (55) in close contact with the inner wall surface (31) of the tapered through hole (35) and with at least a part of the inner wall surface (41) of the raised section (45).

No. of Pages : 29 No. of Claims : 6

(12) PATENT APPLICATION PUBLICATION
(19) INDIA
(22) Date of filing of Application :10/09/2012
(21) Application No.7876/DELNP/2012 A
(43) Publication Date : 14/03/2014

(54) Title of the invention : 4 4 DISUBSTITUTED PIPERIDINE DERIVATIVES USEFUL AS INHIBITORS OF DIPEPTIDYL PEPTIDASE 1 (DPP 1)

(51) International classification :A61K31/4375,A61K31/4436,A61K31/4439
(31) Priority Document No :61/312301
(32) Priority Date :10/03/2010
(33) Name of priority country :U.S.A.
(86) International Application No :PCT/US2011/027699
Filing Date :09/03/2011
(87) International Publication No :WO 2011/112685
(61) Patent of Addition to Application Number :NA
Filing Date :NA
(62) Divisional to Application Number :NA
Filing Date :NA

(71)**Name of Applicant :**
1)JANSSEN PHARMACEUTICA NV
Address of Applicant :Turnhoutseweg 30 B 2340 Beerse Belgium
(72)**Name of Inventor :**
1)DECORTE Bart L.
2)DESJARLAIS Renee L.
3)HUANG Yifang
4)PARKER Michael H.
5)HLASTA Dennis J.

(57) Abstract :
The present invention is directed to 4 4 dl substjtuted piperidine derivatives pharmaceutical compositions containing them and their use in the treatment of disorders and conditions modulated by DPP 1.

No. of Pages : 103 No. of Claims : 20

(12) PATENT APPLICATION PUBLICATION
(19) INDIA
(22) Date of filing of Application :10/09/2012
(21) Application No.7877/DELNP/2012 A
(43) Publication Date : 14/03/2014

(54) Title of the invention : INNER NOZZLE FOR TRANSFERRING MOLTEN METAL CONTAINED IN A METALLURGICAL VESSEL AND DEVICE FOR TRANSFERRING MOLTEN METAL

(51) International classification :B22D41/34,B22D41/40,B22D41/56
(31) Priority Document No :10157127.1
(32) Priority Date :19/03/2010
(33) Name of priority country :EPO
(86) International Application No :PCT/EP2011/001325
Filing Date :17/03/2011
(87) International Publication No :WO 2011/113598
(61) Patent of Addition to Application Number :NA
Filing Date :NA
(62) Divisional to Application Number :NA
Filing Date :NA

(71)**Name of Applicant :**
1)VESUVIUS GROUP S.A.
Address of Applicant :Rue de Douvrain 17 B 7011 Ghlin Belgium
(72)**Name of Inventor :**
1)BOISDEQUIN Vincent
2)COLLURA Mariano
3)SIBIET Fabrice

(57) Abstract :
The invention relates to an inner nozzle (12) for casting molten metal from a metallurgical vessel said inner nozzle comprising a) a substantially tubular portion (24) with an axial through bore; b) an inner nozzle plate comprising a bottom flat contact surface (26) enclosed within a perimeter (Pm) and a second surface opposite the bottom contact surface (26) and joining the wall of the tubular portion (24) to the side edges (40a b 42a b) of the plate said side edges defining the perimeter and thickness of the plate the inner nozzle further comprising c) a metallic casing (22) cladding at least a portion of some or all of the side edges (40a b 42a b) and second surface but not the sliding plane (Pg) of the inner nozzle plate and provided with d) a metallic bearing surface (34a 34b 34c) facing towards and recessed with respect to the contact surface (26) and extending from the cladded portion of the side edges (40a b 42a b) beyond the perimeter (Pm) of the contact surface (26) characterised in that the bearing surface (34a 34b 34c) is defined by the ledges (34a 34b 34c) of at least two separate bearing elements (30a 30b 30c) distributed around the perimeter of the plate.

No. of Pages : 22 No. of Claims : 15

(12) PATENT APPLICATION PUBLICATION
(19) INDIA
(22) Date of filing of Application :10/09/2012
(21) Application No.7878/DELNP/2012 A
(43) Publication Date : 14/03/2014

(54) Title of the invention : INNER NOZZLE FOR TRANSFERRING MOLTEN METAL CONTAINED IN A VESSEL SYSTEM FOR CLAMPING SAID NOZZLE AND CASTING DEVICE

(51) International classification	:B22D41/34,B22D41/40,B22D41/56
(31) Priority Document No	:10157126.3
(32) Priority Date	:19/03/2010
(33) Name of priority country	:EPO
(86) International Application No	:PCT/EP2011/001326
Filing Date	:17/03/2011
(87) International Publication No	:WO 2011/113599
(61) Patent of Addition to Application Number	:NA
Filing Date	:NA
(62) Divisional to Application Number	:NA
Filing Date	:NA

(71)**Name of Applicant :**
1)VESUVIUS GROUP S.A.
Address of Applicant :rue de Douvrain 17 B 7011 Ghlin Belgium
(72)**Name of Inventor :**
1)BOISDEQUIN Vincent
2)COLLURA Mariano
3)SIBIET Fabrice

(57) Abstract :
The invention relates to an inner nozzle (12) to be mounted onto a tube exchange device (10) for holding and replacing an exchangeable pouring nozzle for casting molten metal out of a vessel said tube exchange device comprising a frame with a casting opening said frame being suitable for being fixed to the lower side of a metal casting vessel and comprising a first upper portion and a second lower portion joining at a middle section plane defining the plane where an inner nozzle (12) and an exchangeable pouring nozzle form a sliding contact the upper side portion of the frame comprising means for receiving and clamping (50a 50b 50c) in place at its pouring position a bearing surface of an inner nozzle (12) against a support portion of the upper side portion of the frame such that the through bore of the inner nozzle (12) is in fluid communication with the casting opening and the lower portion comprising means for loading and moving along a first direction (X) into casting position an exchangeable pouring nozzle characterised in that at least two of the clamping means (50a 50b 50c) are arranged transverse to said first direction (X).

No. of Pages : 26 No. of Claims : 16

(12) PATENT APPLICATION PUBLICATION
(19) INDIA
(22) Date of filing of Application :10/09/2012
(21) Application No.7879/DELNP/2012 A
(43) Publication Date : 14/03/2014

(54) Title of the invention : IMPROVEMENTS IN SECURITY SUBSTRATES FOR SECURITY DOCUMENTS

(51) International classification :G06K1/12,G06K19/06
(31) Priority Document No :1003824.8
(32) Priority Date :08/03/2010
(33) Name of priority country :U.K.
(86) International Application No :PCT/GB2011/000218
Filing Date :16/02/2011
(87) International Publication No :WO 2011/110799
(61) Patent of Addition to Application Number :NA
Filing Date :NA
(62) Divisional to Application Number :NA
Filing Date :NA

(71)**Name of Applicant :**
1)DE LA RUE INTERNATIONAL LIMITED
Address of Applicant :De La Rue House Jays Close Basingstoke Hampshire RG22 4BS U.K.
(72)**Name of Inventor :**
1)SNELLING James Peter
2)DOWDALL Fern

(57) Abstract :
The invention relates to improvements in security substrates for security documents. The security substrate has at least two sets of regions having a machine detectable characteristic in which only a first set of regions is applied to a first surface of the substrate. At least two sets of regions together form a machine readable code.

No. of Pages : 23 No. of Claims : 19

(12) PATENT APPLICATION PUBLICATION
(19) INDIA
(22) Date of filing of Application :10/09/2012
(21) Application No.7872/DELNP/2012 A
(43) Publication Date : 14/03/2014

(54) Title of the invention : HOT BLAST CONTROL VALVE FOR A METALLURGICAL INSTALLATION

(51) International classification :F27B1/16,F27D3/16,C21B7/16
(31) Priority Document No :91 665
(32) Priority Date :15/03/2010
(33) Name of priority country :Luxembourg
(86) International Application No :PCT/EP2011/053698
Filing Date :11/03/2011
(87) International Publication No :WO 2011/113761
(61) Patent of Addition to Application Number :NA
Filing Date :NA
(62) Divisional to Application Number :NA
Filing Date :NA

(71)**Name of Applicant :**
1)PAUL WURTH S.A.
Address of Applicant :32 rue dAlsace L 1122 Luxembourg
(72)**Name of Inventor :**
1)HUTMACHER Patrick
2)BERMER Gilles
3)THILLEN Guy

(57) Abstract :
The present invention proposes a hot blast control valve (10) for a metallurgical installation in particular for controlling the flow of hot blast of a blast furnace. The hot blast control valve (10) comprises a metallic valve housing (12) with a refractory lining (20) in which a gas channel (22) is defined; and a valve member (24) rotatably arranged in the gas channel (22) so as to be able of varying a free passage in the gas channel (22) by rotation of the valve member (24) about a rotation axis (26) between an open position and a closed position. The valve member (24) has an envelope with rotational symmetry about the rotation axis (26) and has a through passage (28) arranged in the valve member (24) in a direction transversely to the rotation axis (26) of the valve member (24). The through passage (28) has a cross section substantially identical to that of the gas passage (22). Furthermore the through passage (28) is arranged in the valve member (24) so as to be aligned with the gas channel (22) when the valve member (24) is in its open position.

No. of Pages : 19 No. of Claims : 20

(12) PATENT APPLICATION PUBLICATION
(19) INDIA
(22) Date of filing of Application :10/09/2012
(21) Application No.7873/DELNP/2012 A
(43) Publication Date : 14/03/2014

(54) Title of the invention : SLEEPY HEADS NECK PILLOW

(51) International classification :A47G9/10,A47C7/38,A61F5/01
(31) Priority Document No :12/659814
(32) Priority Date :22/03/2010
(33) Name of priority country :U.S.A.
(86) International Application No :PCT/JP2011/000779
Filing Date :10/02/2011
(87) International Publication No :WO 2011/118120
(61) Patent of Addition to Application Number :NA
Filing Date :NA
(62) Divisional to Application Number :NA
Filing Date :NA

(71)**Name of Applicant :**
1)GLOBAL ACTION CARE LIMITED
Address of Applicant :Flat A 15/F Hillier Commercial Bldg. 65 67 Bonham Strand East Sheung Wang Hong Kong China
(72)**Name of Inventor :**
1)SCHWINGENDORF Alice Jean
2)DURAND Gabriel Olivier

(57) Abstract :
The present invention is related to a supportive sleepy heads neck pillow comprising a pillow with a bone structure support inside the pillow and a clip/strap system that is fixed to the bone structure wherein the bone structure support is fully incased in the pillow and the bone structure support comprises three parts which may be adjustable; a neck bone support an arm bone and an upper back bone. The invention can also be used awake for comfort and support while relaxing watching TV playing video games gambling etc. It can also be used for head and neck support for people who have neck injuries or to prevent neck injuries during transportation.

No. of Pages : 26 No. of Claims : 13

(12) PATENT APPLICATION PUBLICATION
(19) INDIA
(22) Date of filing of Application :10/09/2012
(21) Application No.7874/DELNP/2012 A
(43) Publication Date : 14/03/2014

(54) Title of the invention : PROCESS FOR REMOVING PAINT OVERSPRAY FROM A PAINT SPRAY BOOTH

(51) International classification :C09D7/00
(31) Priority Document No :10002493.4
(32) Priority Date :10/03/2010
(33) Name of priority country :EPO
(86) International Application No :PCT/EP2011/001009
Filing Date :02/03/2011
(87) International Publication No :WO 2011/110302
(61) Patent of Addition to Application Number :NA
Filing Date :NA
(62) Divisional to Application Number :NA
Filing Date :NA

(71)**Name of Applicant :**
1)PPG INDUSTRIES OHIO INC.
Address of Applicant :3800 West 143rd Street Cleveland Ohio 44111 U.S.A.
(72)**Name of Inventor :**
1)ENGHARDT Reimar
2)KASCHA Dietmar
3)SCHARRENBACH Frank

(57) Abstract :
The present invention relates to a specific aqueous separation liquid and to a process for removing paint overspray from a paint spray booth comprising: i) directing a gas stream through a paint spray booth; ii) contacting paint overspray with the gas stream flowing through the paint booth thereby forming a paint loaded gas stream containing paint particles or droplets dispersed therein iii) forming a flowing substantially continuous liquid film of the aqueous separation liquid on a surface positioned within the flow path of the gas stream; iv) directing the paint loaded gas stream to said surface in order to bring the gas stream in contact with the flowing substantially continuous film of the aqueous separation liquid thereby transferring paint particles or droplets from the gas stream into the separation liquid to form a first paint loaded separation liquid; and v) removing the first paint loaded separation liquid and the gas stream having a reduced paint load.

No. of Pages : 24 No. of Claims : 17

(12) PATENT APPLICATION PUBLICATION
(19) INDIA
(22) Date of filing of Application :10/09/2012
(21) Application No.7875/DELNP/2012 A
(43) Publication Date : 14/03/2014

(54) Title of the invention : METHOD OF MAKING ALKYLENE GLYCOLS

(51) International classification :C07C29/10,B01J19/18,B01F7/26
(31) Priority Document No :12/723221
(32) Priority Date :12/03/2010
(33) Name of priority country :U.S.A.
(86) International Application No :PCT/US2011/026719
Filing Date :01/03/2011
(87) International Publication No :WO 2011/162837
(61) Patent of Addition to Application Number :NA
Filing Date :NA
(62) Divisional to Application Number :NA
Filing Date :NA

(71)**Name of Applicant :**
1)H R D CORPORATION
Address of Applicant :14549 Minetta Houston Texas 77035 U.S.A.
(72)**Name of Inventor :**
1)HASSAN Abbas
2)HASSAN Aziz
3)VISWANATHAN Krishnan
4)BORSINGER Greg G.
5)ANTHONY Rayford G.

(57) Abstract :
Herein disclosed is a method of hydrating an alkylene oxide. In an embodiment the method comprises (a) forming a first stream comprising an alkylene oxide and water; (b) flowing the first stream through a high shear device to produce a second stream; and (c) recovering an alkylene glycol from the second stream. In some embodiments the method further comprises contacting the second stream with a catalyst in a reactor to hydrate the alkylene oxide and form the alkylene glycol. In some embodiments alkylene oxide comprises ethylene oxide propylene oxide butylene oxide or combinations thereof. In some embodiments producing the second stream comprises an energy expenditure of at least about 1000 W/m3. In some embodiments the catalyst comprises an amine an acid catalyst an organometallic compound an alkali metal halide a quaternary ammonium halide a zeolite or combinations thereof. In some embodiments the alkylene glycol comprises ethylene glycol.

No. of Pages : 26 No. of Claims : 15

(12) PATENT APPLICATION PUBLICATION
(19) INDIA
(22) Date of filing of Application :05/09/2012
(21) Application No.7757/DELNP/2012 A
(43) Publication Date : 14/03/2014

(54) Title of the invention : SECURITY SYSTEM TAG HAVING COMBINED CLAMP AND ANTENNA

(51) International classification :G06K19/077,E05B73/00
(31) Priority Document No :61/311137
(32) Priority Date :05/03/2010
(33) Name of priority country :U.S.A.
(86) International Application No :PCT/US2011/000373
Filing Date :01/03/2011
(87) International Publication No :WO 2011/109076
(61) Patent of Addition to Application Number :NA
Filing Date :NA
(62) Divisional to Application Number :NA
Filing Date :NA

(71)**Name of Applicant :**
1)SENSORMATIC ELECTRONICS LLC
Address of Applicant :6600 Congress Avenue Boca Raton FL 33487 U.S.A.
(72)**Name of Inventor :**
1)JOHNSON William
2)SOLASKI Thomas Patrick
3)LUO Danhui

(57) Abstract :
A security tag incorporating a hybrid clamp that combines an attachment clamp with an RFID component. The attachment clamp is used to secure an item such as an article of clothing to the tag. The RFID component e.g. an RFID antenna transmits data signals to an RFID reader where the data signals are encoded with information stored about the security tag. By combining the attachment features and RFID features of the security tag in one hybrid clamp more tag space can be freed up for other components and manufacturing cost savings can be realized.

No. of Pages : 26 No. of Claims : 20

(12) PATENT APPLICATION PUBLICATION
(19) INDIA
(22) Date of filing of Application :05/09/2012
(21) Application No.7758/DELNP/2012 A
(43) Publication Date : 14/03/2014

(54) Title of the invention : ACTIVATED INORGANIC METAL OXIDES

(51) International classification :B01J21/02
(31) Priority Document No :61/312869
(32) Priority Date :11/03/2010
(33) Name of priority country :U.S.A.
(86) International Application No :PCT/US2011/027769
Filing Date :09/03/2011
(87) International Publication No :WO 2011/112729
(61) Patent of Addition to Application Number :NA
Filing Date :NA
(62) Divisional to Application Number :NA
Filing Date :NA

(71)**Name of Applicant :**
1)PETROCHEMICAL SUPPLY INC.
Address of Applicant :3707 FM 1960 West Suite 560 Houston TX 77068 U.S.A.
(72)**Name of Inventor :**
1)BAXTER C. Edward Jr.

(57) Abstract :
A catalyst system for heterogeneous catalysis of organic compound conversion reactions is disclosed. The system includes a reaction product of (i) a BF3/alcohol catalyst complex and (ii) an activated metal oxide support for the catalyst complex. The reaction product includes an amount of the catalyst complex effective for catalyzing the conversion reaction.

No. of Pages : 19 No. of Claims : 26

(12) PATENT APPLICATION PUBLICATION
(19) INDIA
(22) Date of filing of Application :05/09/2012
(21) Application No.7759/DELNP/2012 A
(43) Publication Date : 14/03/2014

(54) Title of the invention : PROCESS FOR DEODORIZING EDIBLE OIL

(51) International classification :B01D3/10,B01D5/00,C11B3/12
(31) Priority Document No :10 2010 009 579.6
(32) Priority Date :26/02/2010
(33) Name of priority country :Germany
(86) International Application No :PCT/DE2010/001522
Filing Date :24/12/2010
(87) International Publication No :WO 2011/103846
(61) Patent of Addition to Application Number :NA
Filing Date :NA
(62) Divisional to Application Number :NA
Filing Date :NA

(71)**Name of Applicant :**
1)LURGI GMBH
Address of Applicant :Lurgiallee 5 60439 Frankfurt Germany
(72)**Name of Inventor :**
1)GABOR J¼rgen
2)REICHWEIN Steffen

(57) Abstract :
In a process for deodorizing edible oil by means of a semicontinuous steam distillation plant comprising a stripping column with a plurality of separating stages which can be closed off from one another a degassing stage upstream of the stripping column and a downstream vapor scrubber a vacuum generation plant connected to the degassing stage the separating stages and the vapor scrubber one feed line for stripping steam opening into each of the degassing stage and the separating stage indirect heat exchange surfaces each arranged in the separating stages of the upper and lower sections of the stripping column and a vapor outlet line which is connected to the separating stages arranged in the upper and lower sections of the stripping column and opens into the vapor scrubber a vacuum is generated in the distillation plant and fills the degassing stage with a batch of edible oil feed which passes through the degassing stage and the separating stages in succession and is treated at the same time with stripping steam and the batch preheated in the degassing stage is heated in the separating stages of the upper section of the stripping column to 150 to 180°C heated in the separating stages of the middle section to 230 to 260°C and cooled in the separating stages of the lower section to 90 to 120°C the vapors departing from the separating stages of the upper and lower sections are scrubbed with fatty acid in the vapor scrubber and condensed to give a mixed fatty acid distillate. In order to be able to obtain a fatty acid phase rich in sterols and tocopherols and a fatty acid phase low in sterols and tocopherols separately from one another there is indirect heating at least of the batch present in the first separating stage in flow direction in the middle section of the stripping column said batch having condensed out of the vapors departing from the separating stages of the middle section of the stripping column in indirectly cooled form and having been fractionated selectively into a fatty acid phase rich in sterols and tocopherols and a fatty acid phase low in sterols and tocopherols.

No. of Pages : 12 No. of Claims : 9

(12) PATENT APPLICATION PUBLICATION
(19) INDIA
(22) Date of filing of Application :10/09/2012
(21) Application No.7882/DELNP/2012 A
(43) Publication Date : 14/03/2014

(54) Title of the invention : SINTERING PALETTE CARRIAGE SINTERING MACHINE PROVIDED WITH SINTERING PALETTE CARRIAGE AND SINTERED ORE PRODUCING METHOD

(51) International classification :F27B21/08,C22B1/20
(31) Priority Document No :2010-067997
(32) Priority Date :24/03/2010
(33) Name of priority country :Japan
(86) International Application No :PCT/JP2011/057925
Filing Date :23/03/2011
(87) International Publication No :WO 2011/118840
(61) Patent of Addition to Application Number :NA
Filing Date :NA
(62) Divisional to Application Number :NA
Filing Date :NA

(71)**Name of Applicant :**
1)NIPPON STEEL & SUMITOMO METAL CORPORATION
Address of Applicant :6 1 Marunouchi 2 chome Chiyoda ku Tokyo 1008071 Japan
(72)**Name of Inventor :**
1)KOBAYASHI Masanori
2)OMATSU Yasuhiko
3)HIGUCHI Kenichi
4)KAWAGUCHI Takuya
5)SATO Hiroyuki
6)ITOH Yohhei

(57) Abstract :
Provided are a sintering palette carriage having sinter cake supporting plates which can improve the quality and the productivity of a product by preventing cracks from occurring in the surface of a sinter cake and optimally utilizing the effect obtained by supporting the sinter cake; a sintering machine provided with the sintering palette carriage; and a sintered ore producing method. The sintering palette carriage is used in a sintering machine for producing a sintered ore under the condition that the thickness of a material packed bed is larger than 600 mm. A plurality of sinter cake supporting plates are provided in the width direction of the sintering palette carriage on the sintering palette carriage so that the surface of each plate is substantially parallel with the moving direction of the sintering palette carriage and the height (H) of each sinter cake supporting plate is H=h 120 (mm) (h is the thickness of the material packed bed) or less.

No. of Pages : 26 No. of Claims : 3

(12) PATENT APPLICATION PUBLICATION
(19) INDIA
(22) Date of filing of Application :07/09/2012
(21) Application No.7851/DELNP/2012 A
(43) Publication Date : 14/03/2014

(54) Title of the invention : INTERACTIVE COLOR CENTER DISPLAY APPARATUS

(51) International classification :G09F9/00,G06F3/14,G06Q30/00
(31) Priority Document No :61/330505
(32) Priority Date :03/05/2010
(33) Name of priority country :U.S.A.
(86) International Application No :PCT/US2011/035055
Filing Date :03/05/2011
(87) International Publication No :WO 2011/140134
(61) Patent of Addition to Application Number :NA
Filing Date :NA
(62) Divisional to Application Number :NA
Filing Date :NA

(71)**Name of Applicant :**
1)BEHR PROCESS CORPORATION
Address of Applicant :3400 W. Segerstrom Ave. Santa Ana CA 92704 6405 U.S.A.
(72)**Name of Inventor :**
1)REYNOLDS Damien
2)WOELFEL Erika

(57) Abstract :
A display unit comprising a plurality of display modules arranged in a row and having an upper display section and a lower display section. One of the display modules includes an interactive Kiosk and a second of the display modules includes at least one computer controlled card reading video station. A consumer may pass a coded paint color sample card past a code reader in the video station and is thereafter presented with a display of a color present on the sample card followed by a selectable sequence of video display screens which may comprise part of a color selection application program.

No. of Pages : 77 No. of Claims : 12

(12) PATENT APPLICATION PUBLICATION
(19) INDIA
(22) Date of filing of Application :07/09/2012
(21) Application No.7852/DELNP/2012 A
(43) Publication Date : 14/03/2014

(54) Title of the invention : A BUILDING MODULE A METHOD FOR MAKING SAME AND A METHOD FOR USING SAME TO CONSTRUCT A BUILDING

(51) International classification :E04B1/38
(31) Priority Document No :61/337935
(32) Priority Date :12/02/2010
(33) Name of priority country :U.S.A.
(86) International Application No :PCT/US2011/024599
Filing Date :11/02/2011
(87) International Publication No :WO 2011/100592
(61) Patent of Addition to Application Number :NA
Filing Date :NA
(62) Divisional to Application Number :NA
Filing Date :NA

(71)**Name of Applicant :**
1)SHAPIRO Darek
Address of Applicant :31 Mcclean Avenue Stamford CT 06905 U.S.A.
2)GALINDO Victor Rolando Yanez
(72)**Name of Inventor :**
1)SHAPIRO Darek
2)GALINDO Victor Rolando Yanez

(57) Abstract :
A building module. The building module has a rigid inner construction panel defining a planar surface thereon; one or more rigid brackets each affixed by one or more mechanical fasteners to the planar surface of the inner construction panel; a rigid closed cell spray foam or adhesive matrix contiguous to and substantially covering the planar surface of the construction panel and filling and surrounding and/or embedding at least a major portion of the one or more brackets. Each of the one or more brackets bears a planar surface facing substantially away from the planar surface of the inner construction panel. The surface area of the planar surface of each of the one or more brackets is substantially smaller than the surface area of the planar surface of the construction panel to which it is affixed.

No. of Pages : 54 No. of Claims : 33

(12) PATENT APPLICATION PUBLICATION
(19) INDIA
(22) Date of filing of Application :07/09/2012
(21) Application No.7853/DELNP/2012 A
(43) Publication Date : 14/03/2014

(54) Title of the invention : CLAMP ASSISTANT MEMBER AND CUTTING TOOL INCLUDING CLAMP ASSISTANT MEMBER

(51) International classification :B23C5/22,B23B27/16
(31) Priority Document No :NA
(32) Priority Date :NA
(33) Name of priority country :NA
(86) International Application No :PCT/JP2010/054058
Filing Date :10/03/2010
(87) International Publication No :WO 2011/111198
(61) Patent of Addition to Application Number :NA
Filing Date :NA
(62) Divisional to Application Number :NA
Filing Date :NA

(71)**Name of Applicant :**
1)TUNGALOY CORPORATION
Address of Applicant :11 1 Yoshima Kogyodanchi Iwaki shi Fukushima 9701144 Japan
(72)**Name of Inventor :**
1)YOSHIOKA Shiro

(57) Abstract :
Provided is a clamp assistant member that has a simple shape that is inexpensive to manufacture that is applicable also to small diameter tools and that provides excellent workability at the time of replacing a cutting insert. Also provided is a cutting tool that includes said clamp assistant member. To achieve the above the clamp assistant member has an engagement section for engagement with a clamping screw has a ring shape with a portion thereof completely cut out and deforms elastically and expands in outer diameter when a force is applied from the head of the clamping screw to the upper section of the inner circumferential surface. A cutting insert is attached to a tool body by means of the clamp assistant member.

No. of Pages : 43 No. of Claims : 4

(12) PATENT APPLICATION PUBLICATION
(19) INDIA
(22) Date of filing of Application :04/09/2012
(21) Application No.7681/DELNP/2012 A
(43) Publication Date : 14/03/2014

(54) Title of the invention : SEALED FUNCTIONAL ELEMENT

(51) International classification :H05B33/04,G02F1/1333,G02F1/1339
(31) Priority Document No :2010033207
(32) Priority Date :18/02/2010
(33) Name of priority country :Japan
(86) International Application No :PCT/JP2011/053509
Filing Date :18/02/2011
(87) International Publication No :WO 2011/102465
(61) Patent of Addition to Application Number :NA
Filing Date :NA
(62) Divisional to Application Number :NA
Filing Date :NA

(71)**Name of Applicant :**
1)MITSUI CHEMICALS TOHCELLO INC.
Address of Applicant :7 Kandamitoshiro cho Chiyoda ku Tokyo 1018485 Japan
(72)**Name of Inventor :**
1)NAKAMURA Osamu

(57) Abstract :
Disclosed is a functional element such as a liquid crystal display element an element for an organic EL and a functional element for a sheet like light emitter an optical device a solar cell or the like which can be sealed reliably by a simple process i.e. heat sealing has a long service life and can have a reduced thickness. Specifically disclosed is a sealed functional element which comprises a base material layer (W) a functional element layer (X) and a sealing laminate film (Z) and which is characterized in that the base material layer (W) and a heat sealable thermoplastic resin layer (E) for the sealing laminate film (Z) are adhered to and integrated into each other. The functional element is also characterized in that the sealing laminate film comprises a heat sealable thermoplastic resin layer (E) a water absorbable layer (F) and a gas barrier layer (G) laminated in this order.

No. of Pages : 49 No. of Claims : 8

(12) PATENT APPLICATION PUBLICATION
(19) INDIA
(22) Date of filing of Application :04/09/2012
(21) Application No.7682/DELNP/2012 A
(43) Publication Date : 14/03/2014

(54) Title of the invention : SYSTEMS AND METHODS FOR PROCESSING ALLOY INGOTS

(51) International classification :B23K9/04,C22F1/16,C22F1/10
(31) Priority Document No :12/700963
(32) Priority Date :05/02/2010
(33) Name of priority country :U.S.A.
(86) International Application No :PCT/US2011/022213
Filing Date :24/01/2011
(87) International Publication No :WO 2011/097085
(61) Patent of Addition to Application Number :NA
Filing Date :NA
(62) Divisional to Application Number :NA
Filing Date :NA

(71)**Name of Applicant :**
1)ATI PROPERTIES INC.
Address of Applicant :1600 N.E. Old Salem Road Albany Oregon 97321 U.S.A.
(72)**Name of Inventor :**
1)DE SOUZA Urban J.
2)FORBES JONES Robin M.
3)KENNEDY Richard L.
4)OBRIEN Christopher M.

(57) Abstract :
Processes and methods related to processing and hot working alloy ingots are disclosed. A metallic material layer is deposited onto at least a region of a surface of an alloy ingot before hot working the alloy ingot. The processes and methods are characterized by a reduction in the incidence of surface cracking of the alloy ingot during hot working.

No. of Pages : 55 No. of Claims : 44

(12) PATENT APPLICATION PUBLICATION
(19) INDIA
(22) Date of filing of Application :06/09/2012
(21) Application No.7799/DELNP/2012 A
(43) Publication Date : 14/03/2014

(54) Title of the invention : DRAWING FRAME HAVING A GUIDE TABLE FOR A GUIDE APRON

(51) International classification :D01H5/86,D01H5/88
(31) Priority Document No :10 2010 011 489.8
(32) Priority Date :16/03/2010
(33) Name of priority country :Germany
(86) International Application No :PCT/EP2011/053624
Filing Date :10/03/2011
(87) International Publication No :WO 2011/113744
(61) Patent of Addition to Application Number :NA
Filing Date :NA
(62) Divisional to Application Number :NA
Filing Date :NA

(71)**Name of Applicant :**
1)MASCHINENFABRIK RIETER AG
Address of Applicant :Klosterstr. 20 CH 8406 Winterthur Switzerland
(72)**Name of Inventor :**
1)SCH„FFLER Gernot
2)BAUER Manfred

(57) Abstract :
A drawing frame (1) is described for drawing a fibre slubbing (14) of a workstation of a textile machine having two roller pairs (2 3) which are arranged behind one another in the transport direction (A) and in each case contain a drafting roller (4; 6) which can be driven wherein the first drafting roller (4) in the transport direction (A) is assigned a guide apron (8) which wraps around this drafting roller (4) and a guide table (10) which is arranged between the first (4) and the second (6) drafting roller. It is provided according to the invention that the first drafting roller (4) is mounted in a bearing slide (19) which can be displaced in the transport direction (A) and the second drafting roller (6) is mounted in a bearing block (22) and that the guide table (10) is fixed on the bearing block (22) of the second drafting roller (6).

No. of Pages : 16 No. of Claims : 6

(12) PATENT APPLICATION PUBLICATION
(19) INDIA
(22) Date of filing of Application :06/09/2012
(21) Application No.7777/DELNP/2012 A
(43) Publication Date : 14/03/2014

(54) Title of the invention : METHOD OF TREATING A WELLBORE HAVING ANNULAR ISOLATION SYSTEM

(51) International classification :C09K8/512,C09K8/62
(31) Priority Document No :12/723509
(32) Priority Date :12/03/2010
(33) Name of priority country :U.S.A.
(86) International Application No :PCT/US2011/027425
Filing Date :07/03/2011
(87) International Publication No :WO 2011/112519
(61) Patent of Addition to Application Number :NA
Filing Date :NA
(62) Divisional to Application Number :NA
Filing Date :NA

(71)**Name of Applicant :**
1)BAKER HUGHES INCORPORATED
Address of Applicant :2929 Allen Parkway Suite 2100 Houston Texas 77019 U.S.A.
(72)**Name of Inventor :**
1)GUPTA D.V. Satyanarayana
2)AULT Marshall G.
3)VENUGOPAL Rupa

(57) Abstract :
A well treatment fluid containing borated galactomannan may be used to isolate a productive zone in a well having multiple productive zones. The fluid is particularly useful in treatment of wells containing a mechanical zonal isolation system in the productive zone of interest. The fluid is pumped into the well in a substantially non hydrated form. The well treatment fluid is therefore highly effective in preferentially sealing or blocking productive zones in the formation since delayed hydration of the fluid may be controlled for up to several hours.

No. of Pages : 30 No. of Claims : 25

(12) PATENT APPLICATION PUBLICATION
(19) INDIA
(22) Date of filing of Application :10/09/2012
(21) Application No.7869/DELNP/2012 A
(43) Publication Date : 14/03/2014

(54) Title of the invention : METHODS OF CONDITIONING MIXED LIQUOR USING WATER SOLUBLE QUATERNARY AMMONIUM STARCHES

(51) International classification :C02F1/54
(31) Priority Document No :NA
(32) Priority Date :NA
(33) Name of priority country :NA
(86) International Application No :PCT/CN2010/000410
Filing Date :31/03/2010
(87) International Publication No :WO 2011/120192
(61) Patent of Addition to Application Number :NA
Filing Date :NA
(62) Divisional to Application Number :NA
Filing Date :NA

(71)**Name of Applicant :**
1)GENERAL ELECTRIC COMPANY (A NEW YORK CORPORATION)
Address of Applicant :1 River Road Schenectady NY 12345 U.S.A.
(72)**Name of Inventor :**
1)WANG Sijing
2)VASCONCELLOS Stephen R.

(57) Abstract :
Disclosed is a method of conditioning mixed liquor in membrane bioreactor (MBR) systems comprising adding an effective amount of a treatment composition comprising a water soluble cationic quaternary ammonium starch or a water soluble quaternary ammonium starch/gum blend to the mixed liquor. Also disclosed is a method of improving flux in an MBR system comprising adding the treatment composition to the mixed liquor of the MBR.

No. of Pages : 22 No. of Claims : 18

(12) PATENT APPLICATION PUBLICATION
(19) INDIA
(22) Date of filing of Application :06/09/2012
(21) Application No.7809/DELNP/2012 A
(43) Publication Date : 14/03/2014

(54) Title of the invention : LEADFRAME AND CONNECTING SOCKET HAVING A LEADFRAME

(51) International classification :H01R29/00,H01R43/24
(31) Priority Document No :61/324025
(32) Priority Date :14/04/2010
(33) Name of priority country :U.S.A.
(86) International Application No :PCT/EP2011/055895
Filing Date :14/04/2011
(87) International Publication No :WO 2011/128401
(61) Patent of Addition to Application Number :NA
Filing Date :NA
(62) Divisional to Application Number :NA
Filing Date :NA

(71)**Name of Applicant :**
1)PHOENIX CONTACT GMBH & CO. KG
Address of Applicant :Flachsmarktstrae 8 32825 Blomberg Germany
(72)**Name of Inventor :**
1)STARKE Cord
2)SCH„FER Sebastian
3)SCHOLZ Sebastian
4)HUSS John Phillip

(57) Abstract :
The present invention relates to a leadframe having a plurality of connections for electrical conductors a plurality of contacts and at least two outer current bars and to a connecting socket having a leadframe as well as to a system for transmission of electrical power in particular from a plurality of solar modules (photovoltaic modules) having a connecting socket such as this. In order to devise a leadframe which occupies as little space as possible at least one connection (32a e) is provided for an electrical conductor between the outer current bars (34a b). This allows the leadframe to have a compact physical shape. The invention is based on the discovery that leadframes are used in the prior art to bridge the distances between predetermined contact separations offering the possibility of producing in one stamped part strip conductors which have different geometries. Furthermore a connecting socket having such a leadframe is described and a system for transmission of electrical power using such a connecting socket.

No. of Pages : 40 No. of Claims : 27

(12) PATENT APPLICATION PUBLICATION
(19) INDIA
(22) Date of filing of Application :06/09/2012
(21) Application No.7806/DELNP/2012 A
(43) Publication Date : 14/03/2014

(54) Title of the invention : MOTOR DRIVING SYSTEM FOR ELECTRIC VEHICLE

(51) International classification :B60L3/00,F16H1/32,G01D5/244
(31) Priority Document No :2010053306
(32) Priority Date :10/03/2010
(33) Name of priority country :Japan
(86) International Application No :PCT/JP2011/055045
Filing Date :04/03/2011
(87) International Publication No :WO 2011/111617
(61) Patent of Addition to Application Number :NA
Filing Date :NA
(62) Divisional to Application Number :NA
Filing Date :NA

(71)**Name of Applicant :**
1)NTN CORPORATION
Address of Applicant :3 17 Kyomachibori 1 chome Nishi ku Osaka shi Osaka 5500003 Japan
(72)**Name of Inventor :**
1)OZAKI Takayoshi
2)UENO Shintarou
3)TAKAHASHI Toru

(57) Abstract :
Provided is a motor driving system for an electric vehicle the reliability of which is improved by controlling the rotation of a motor. The motor driving system comprises: a plurality of angular sensors (19A 19B) for detecting a relative rotation angle between the stator (23) and rotor (25) of a motor (B) for driving an electric vehicle; and a controller (46) for controlling the rotation of the motor (B) according to the relative rotation angle detected by the angular sensors. The controller (46) has an angular sensor switching means (47) for selecting and activating one of the angular sensors (19A 19B) and for when it is determined that the angular sensor in operation is abnormal switching the operation to another one of the angular sensors.

No. of Pages : 26 No. of Claims : 10

(12) PATENT APPLICATION PUBLICATION
(19) INDIA
(22) Date of filing of Application :07/09/2012
(21) Application No.7842/DELNP/2012 A
(43) Publication Date : 14/03/2014

(54) Title of the invention : METHOD OF MAKING CYCLIC GUANIDINE FROM DICYANDIAMIDE AND COATING COMPOSITIONS CONTAINING SAME

(51) International classification :C07C277/02
(31) Priority Document No :12/720971
(32) Priority Date :10/03/2010
(33) Name of priority country :U.S.A.
(86) International Application No :PCT/US2011/027567
Filing Date :08/03/2011
(87) International Publication No :WO 2011/112594
(61) Patent of Addition to Application Number :NA
Filing Date :NA
(62) Divisional to Application Number :NA
Filing Date :NA

(71)**Name of Applicant :**
1)PPG INDUSTRIES OHIO INC.
Address of Applicant :3800 West 143rd Street Cleveland Ohio 44111 U.S.A.
(72)**Name of Inventor :**
1)ZAWACKY Steven R.
2)HICKENBOTH Charles R.
3)KARABIN Richard F.
4)McCOLLUM Gregory J.
5)MORIARITY Thomas C.

(57) Abstract :
The present invention is directed to a method for preparing a cyclic guanidine comprising reacting (i) a cyanamide (ii) a polyamine and (iii) a weak acid. The present invention is also directed to a coating composition comprising the cyclic guanidine.

No. of Pages : 31 No. of Claims : 22

(12) PATENT APPLICATION PUBLICATION
(19) INDIA
(22) Date of filing of Application :07/09/2012
(21) Application No.7843/DELNP/2012 A
(43) Publication Date : 14/03/2014

(54) Title of the invention : ACID PRODUCTION BY FERMENTATION

(51) International classification :C12P7/56
(31) Priority Document No :61/312596
(32) Priority Date :10/03/2010
(33) Name of priority country :U.S.A.
(86) International Application No :PCT/NZ2011/000033
Filing Date :10/03/2011
(87) International Publication No :WO 2011/112103
(61) Patent of Addition to Application Number :NA
Filing Date :NA
(62) Divisional to Application Number :NA
Filing Date :NA

(71)**Name of Applicant :**
1)LANZATECH NEW ZEALAND LIMITED
Address of Applicant :24 Balfour Road Parnell Auckland 1052 New Zealand
(72)**Name of Inventor :**
1)SIMPSON Sean Dennis

(57) Abstract :
The invention provides methods for producing Lactate by anaerobic Fermentation. According to particular methods of the invention Lactate is produced by anaerobic fermentation of a substrate comprising hydrogen and carbon monoxide.

No. of Pages : 37 No. of Claims : 21

(12) PATENT APPLICATION PUBLICATION
(19) INDIA
(22) Date of filing of Application :10/09/2012
(21) Application No.7883/DELNP/2012 A
(43) Publication Date : 14/03/2014

(54) Title of the invention : SILICON CONTAINING BIODEGRADABLE MATERIAL FOR ANTI INFLAMMATORY THERAPY

(51) International classification :A61K31/80,A61P17/00,A61P29/00
(31) Priority Document No :10 2010 008 982.6
(32) Priority Date :24/02/2010
(33) Name of priority country :Germany
(86) International Application No :PCT/EP2011/052560
Filing Date :22/02/2011
(87) International Publication No :WO 2011/104214
(61) Patent of Addition to Application Number :NA
Filing Date :NA
(62) Divisional to Application Number :NA
Filing Date :NA

(71)**Name of Applicant :**
1)BAYER INNOVATION GMBH
Address of Applicant :Merowingerplatz 1 40225 D¼sseldorf Germany
(72)**Name of Inventor :**
1)BAECKER Iwer
2)SUSCHEK Christoph

(57) Abstract :
The present invention relates to a silicon containing biodegradable material for the prophylaxis and/or the treatment of diseases which are associated with an elevated interleukin 1 and/or interleukin 6 and/or interleukin 8 activity and/or which can be treated by reducing such an activity or such cytokine activity.

No. of Pages : 24 No. of Claims : 7

(12) PATENT APPLICATION PUBLICATION
(19) INDIA
(22) Date of filing of Application :04/09/2012
(21) Application No.7693/DELNP/2012 A
(43) Publication Date : 14/03/2014

(54) Title of the invention : METHODS FOR PRODUCING PHOTOSENSITIVE MICROPARTICLES NON AQUEOUS DISPERSIONS THEREOF AND ARTICLES PREPARED THEREWITH

(51) International classification :C08G18/67,C08G18/75,C09D175/04
(31) Priority Document No :12/719293
(32) Priority Date :08/03/2010
(33) Name of priority country :U.S.A.
(86) International Application No :PCT/US2011/025008
Filing Date :16/02/2011
(87) International Publication No :WO 2011/112325
(61) Patent of Addition to Application Number :NA
Filing Date :NA
(62) Divisional to Application Number :NA
Filing Date :NA

(71)**Name of Applicant :**
1)TRANSITIONS OPTICAL INC.
Address of Applicant :9251 Belcher Road Pinellas Park Florida 33782 U.S.A.
(72)**Name of Inventor :**
1)BOWLES Steven E.
2)CHOPRA Anu
3)COLTON James P.
4)FALER Dennis L.
5)HALEY M. Frank
6)LAMERS Paul H.
7)LU Yunyi
8)STEWART Kevin J.
9)TAYLOR Cathy A.
10)WANG Feng
11)ZEZINKA Elizabeth A.

(57) Abstract :
Described are non aqueous dispersions of photosensitive polymeric microparticles comprising: a) an organic continuous phase comprising an organic solvent; and b) photosensitive polymeric microparticles dispersed in the organic continuous phase. The microparticles comprise an at least partially polymerized component having integral surface and interior domains wherein the surface domain comprises a polymeric material that is solubilized by the organic solvent the interior domain comprises a polymeric material that is insoluble in the organic solvent and the surface domain and/or interior domain is photosensitive. Also described are methods of producing such non aqueous dispersions curable film forming compositions containing them and photosensitive coated substrates.

No. of Pages : 93 No. of Claims : 28

(12) PATENT APPLICATION PUBLICATION
(19) INDIA
(22) Date of filing of Application :07/09/2012
(21) Application No.7818/DELNP/2012 A
(43) Publication Date : 14/03/2014

(54) Title of the invention : NON ABRASIVE BACK COAT FOR COATED ABRASIVES

(51) International classification :B24D3/28,B24D7/00,B24D18/00
(31) Priority Document No :61/349539
(32) Priority Date :28/05/2010
(33) Name of priority country :U.S.A.
(86) International Application No :PCT/US2011/038328
Filing Date :27/05/2011
(87) International Publication No :WO 2011/150326
(61) Patent of Addition to Application Number :NA
Filing Date :NA
(62) Divisional to Application Number :NA
Filing Date :NA

(71)**Name of Applicant :**
1)SAINT GOBAIN ABRASIVES INC.
Address of Applicant :One New Bond Street Worcester Massachusetts 01615 U.S.A.
2)SAINT GOBAIN ABRASIFS
(72)**Name of Inventor :**
1)GOLDSMITH Paul S.
2)PORTER John
3)GAETA Anthony C.

(57) Abstract :
An abrasive article includes a backing including first and second major surfaces an abrasive layer disposed over the first major surface and a back coat layer disposed over the second major surface. The back coat layer includes a polymeric material and a fabric.

No. of Pages : 30 No. of Claims : 15

(12) PATENT APPLICATION PUBLICATION
(19) INDIA
(22) Date of filing of Application :07/09/2012
(21) Application No.7819/DELNP/2012 A
(43) Publication Date : 14/03/2014

(54) Title of the invention : NUTRITIONAL COMPOSITIONS

(51) International classification :A23L1/29,A23L1/308,A23L1/0528
(31) Priority Document No :12/790670
(32) Priority Date :28/05/2010
(33) Name of priority country :U.S.A.
(86) International Application No :PCT/US2011/038346
Filing Date :27/05/2011
(87) International Publication No :WO 2011/150337
(61) Patent of Addition to Application Number :NA
Filing Date :NA
(62) Divisional to Application Number :NA
Filing Date :NA

(71)**Name of Applicant :**
1)MEAD JOHNSON NUTRITION COMPANY
Address of Applicant :2400 W. Lloyd Expressway Evansville Indiana 47721 0001 U.S.A.
(72)**Name of Inventor :**
1)WITTKE Anja
2)LIPPMAN Hugh

(57) Abstract :
The present disclosure relates to nutritional compositions for pediatric subjects such as children s nutritional products and infant formulas comprising a protein source a fat source a carbohydrate source and a source of glucan.

No. of Pages : 31 No. of Claims : 20

(12) PATENT APPLICATION PUBLICATION
(19) INDIA
(22) Date of filing of Application :07/09/2012
(21) Application No.7857/DELNP/2012 A
(43) Publication Date : 14/03/2014

(54) Title of the invention : METHOD AND APPARATUS FOR BEVERAGE FORMATION WITH AUTOMATED WATER DELIVERY TO HEATING TANK

(51) International classification :A47J31/36
(31) Priority Document No :12/704831
(32) Priority Date :12/02/2010
(33) Name of priority country :U.S.A.
(86) International Application No :PCT/US2011/024335
Filing Date :10/02/2011
(87) International Publication No :WO 2011/100418
(61) Patent of Addition to Application Number :NA
Filing Date :NA
(62) Divisional to Application Number :NA
Filing Date :NA

(71)**Name of Applicant :**
1)KEURIG INCORPORATED
Address of Applicant :55 Walkers Brook Drive Reading MA 01867 3272 U.S.A.
(72)**Name of Inventor :**
1)TINKLER Ian
2)SARICH Mary
3)SAWYER William
4)PASQUINI Richard

(57) Abstract :
A method and apparatus for forming a beverage using a beverage formation device. Opening of a brew chamber may automatically enable the provision of beverage precursor liquid from a reservoir to a heating tank that is used (heated or not) to form a beverage. For example opening of the brew chamber may cause a valve to be opened or otherwise permit flow of beverage precursor liquid from the reservoir to the heating tank. The valve may open simultaneously and automatically with a brew chamber lid and may close when the brew chamber lid is closed.

No. of Pages : 23 No. of Claims : 20

(12) PATENT APPLICATION PUBLICATION
(19) INDIA
(22) Date of filing of Application :07/09/2012
(21) Application No.7858/DELNP/2012 A
(43) Publication Date : 14/03/2014

(54) Title of the invention : YEAST MICROORGANISMS WITH REDUCED BY PRODUCT ACCUMULATION FOR IMPROVED PRODUCTION OF FUELS CHEMICALS AND AMINO ACIDS

(51) International classification :C12N1/00
(31) Priority Document No :61/304069
(32) Priority Date :12/02/2010
(33) Name of priority country :U.S.A.
(86) International Application No :PCT/US2011/024482
Filing Date :11/02/2011
(87) International Publication No :WO 2011/142865
(61) Patent of Addition to Application Number :NA
Filing Date :NA
(62) Divisional to Application Number :NA
Filing Date :NA

(71)**Name of Applicant :**
1)GEVO INC.
Address of Applicant :345 Inverness Drive South Building C Suite 310 Englewood CO 80112 U.S.A.
2)CALIFORNIA INSTITUTE OF TECHNOLOGY
(72)**Name of Inventor :**
1)BUELTER Thomas
2)HAWKINS Andrew
3)PORTER SCHEINMAN Stephanie
4)MEINHOLD Peter
5)DUNDON Catherine Asleson
6)ARISTIDOU Aristos
7)URANO Jun
8)LIES Doug
9)PETERS Matthew
10)DEY Melissa
11)JANCAUSKAS Justas
12)EVANS Kent
13)KELLY Julie
14)BERRY Ruth
15)BASTIAN Sabine
16)ARNOLD Frances

(57) Abstract :
Recombinant microorganisms comprising biosynthetic pathways and methods of using said recombinant microorganisms to produce various beneficial metabolites are provided. The recombinant microorganismsprovided may further comprise one or more modifications resulting in the reduction or elimination of 3 keto-acid (e.g... acelolactate and 2-aceto-2-hydroxybutyrate) and/oraldehyde-derived byproducts. Further, the recombinant microorganisms may be microorganisms of the Saccharomycesclade, Crabtree-negative yeast microorganisms, Crabtree-positive yeast microorganisms, post-WGD (wholegenome duplication) yeast microorganisms, pre-WGD(whole genome duplication) yeast microorganisms, and non-fermenting yeast microorganisms.

No. of Pages : 368 No. of Claims : 165

(12) PATENT APPLICATION PUBLICATION
(19) INDIA
(22) Date of filing of Application :07/09/2012
(21) Application No.7859/DELNP/2012 A
(43) Publication Date : 14/03/2014

(54) Title of the invention : THERMOPLASTIC AND BIODEGRADABLE POLYMER FOAMS CONTAINING OXYGEN SCAVENGER

(51) International classification :C08K3/08,C08J9/06,C08L25/06
(31) Priority Document No :12/719160
(32) Priority Date :08/03/2010
(33) Name of priority country :U.S.A.
(86) International Application No :PCT/US2011/024430
Filing Date :11/02/2011
(87) International Publication No :WO 2011/112304
(61) Patent of Addition to Application Number :NA
Filing Date :NA
(62) Divisional to Application Number :NA
Filing Date :NA

(71)**Name of Applicant :**
1)MULTISORB TECHNOLOGIES INC.
Address of Applicant :325 Harlem Road Buffalo New York 14224 U.S.A.
(72)**Name of Inventor :**
1)CHAU Chieh Chun
2)INCORVIA Samuel A.
3)PAYNE David S.
4)POWERS Thomas H.
5)SOLOVYOV Stanislav E.

(57) Abstract :
The invention relates to an oxygen scavenging material comprising an oxygen scavenger disbursed in a low density foam wherein the oxygen scavenger has a particle size of less than 25 µm. In another embodiment the invention relates to a product package comprising a foam tray product in the tray and a polymer cover surrounding the meat and tray wherein the foam tray comprises an oxygen scavenging material wherein the oxygen scavenging material comprises an oxygen scavenger disbursed in the foam and wherein the oxygen scavenger has a particle size of less than 25 µm.

No. of Pages : 28 No. of Claims : 29

(12) PATENT APPLICATION PUBLICATION
(19) INDIA
(22) Date of filing of Application :07/09/2012
(21) Application No.7827/DELNP/2012 A
(43) Publication Date : 14/03/2014

(54) Title of the invention : IMAGE DISPLAY APPARATUS IMAGE DISPLAY CONTROL METHOD AND PROGRAM

(51) International classification :G09G5/00,G06F3/048
(31) Priority Document No :2010057496
(32) Priority Date :15/03/2010
(33) Name of priority country :Japan
(86) International Application No :PCT/JP2011/055338
Filing Date :08/03/2011
(87) International Publication No :WO 2011/114943
(61) Patent of Addition to Application Number :NA
Filing Date :NA
(62) Divisional to Application Number :NA
Filing Date :NA

(71)**Name of Applicant :**
1)SONY CORPORATION
Address of Applicant :1 7 1 Konan Minato Ku Tokyo 1080075 Japan
(72)**Name of Inventor :**
1)KATO Shinya

(57) Abstract :
Disclosed are an apparatus and method for effective display control even when an apparatus exceeds a prescribed operating range in a configuration that switches display data according to apparatus rotation operations. A control unit changes the operating range when the apparatus rotates beyond the operating range preset on the apparatus in a configuration that updates display data based on apparatus rotation angle information that is detected by a sensor. Specifically the operating range is sequentially updated so that the present angle of an image display apparatus is constantly set within the operating range. With this operating range updating process the apparatus is constantly set to the effective operating range and display data is constantly updated without a problem of the display data becoming fixed by the apparatus position.

No. of Pages : 40 No. of Claims : 7

(12) PATENT APPLICATION PUBLICATION
(19) INDIA
(22) Date of filing of Application :07/09/2012
(21) Application No.7828/DELNP/2012 A
(43) Publication Date : 14/03/2014

(54) Title of the invention : VENTURI DRAIN FOR SELF PUMPING BEARING ROLLING MILLS

(51) International classification :B21B31/07,F16C13/02,F16C33/10
(31) Priority Document No :12/796071
(32) Priority Date :08/06/2010
(33) Name of priority country :U.S.A.
(86) International Application No :PCT/US2011/036160
Filing Date :12/05/2011
(87) International Publication No :WO 2011/156079
(61) Patent of Addition to Application Number :NA
Filing Date :NA
(62) Divisional to Application Number :NA
Filing Date :NA

(71)**Name of Applicant :**
1)SIEMENS INDUSTRY INC.
Address of Applicant :3333 Old Milton Parkway Alpharetta Georgia 30005 4437 U.S.A.
(72)**Name of Inventor :**
1)OSGOOD Peter N.
2)WOJTKOWSKI JR. Thomas C.

(57) Abstract :
A system is disclosed for use in a rolling mill oil film bearing to remove oil exiting from between a rotating sleeve and a fixed bushing surrounding the sleeve. The system comprises an annular chamber arranged to receive the exiting flow of oil. The chamber is isolated from a drainage sump by confinement surfaces including a seal interface defined by a flexible seal in contact with an adjacent rigid component of the bearing. Impellers project into the chamber and are rotable with and at the velocity of the sleeve to rotatively propel oil around the chamber. A discharge conduit communicates tangentially with the chamber and is arranged to receive a pressurized flow of the oil being rotatively propelled around the chamber. A venturi is located in the discharge conduit. A suction conduit connects the venturi to the drainage sump. Oil escaping from the annular chamber past the seal interface into the drainage sump is aspirated by the venturi for removal via the conduit.

No. of Pages : 15 No. of Claims : 3

(12) PATENT APPLICATION PUBLICATION
(19) INDIA
(22) Date of filing of Application :07/09/2012
(21) Application No.7829/DELNP/2012 A
(43) Publication Date : 14/03/2014

(54) Title of the invention : SUTURE PACKAGES PROVIDING UNCONSTRAINED DISPENSING OF SUTURES AND METHODS THEREFOR

(51) International classification :A61B17/06
(31) Priority Document No :12/719592
(32) Priority Date :08/03/2010
(33) Name of priority country :U.S.A.
(86) International Application No :PCT/US2011/027130
Filing Date :04/03/2011
(87) International Publication No :WO 2011/112433
(61) Patent of Addition to Application Number :NA
Filing Date :NA
(62) Divisional to Application Number :NA
Filing Date :NA

(71)**Name of Applicant :**
1)ETHICON INC.
Address of Applicant :U.S. Route #22 Somerville NJ 08876 0151 U.S.A.
(72)**Name of Inventor :**
1)CERWIN Robert J.
2)MCHUGH KAROW Meredith
3)PARKER Raymond

(57) Abstract :
A suture package (20) includes a first part or base (24) having an outer surface an inner surface and a plurality of openings (52) extending between the outer and inner surfaces and a second part or lid (22) having an outer surface an inner surface and a plurality of posts (38) projecting from the inner surface. The suture package has a closed configuration in which the inner surface of the lid opposes the inner surface of the base with distal ends of the posts engaging the inner surface of the base at locations that are offset from and adjacent the plurality of openings extending through the base. The package includes a hinge (26) interconnecting the lid and the base for opening and closing the suture package. Suture winding posts on a fixture are passable through the base openings for winding at least one suture around the suture winding posts for positioning the at least one suture on the base.

No. of Pages : 35 No. of Claims : 25

(12) PATENT APPLICATION PUBLICATION
(19) INDIA
(22) Date of filing of Application :07/09/2012
(21) Application No.7833/DELNP/2012 A
(43) Publication Date : 14/03/2014

(54) Title of the invention : LIGHTING DEVICE FOR VEHICLE

(51) International classification :B62J6/00,B60Q1/00,B60Q1/26
(31) Priority Document No :2010054752
(32) Priority Date :11/03/2010
(33) Name of priority country :Japan
(86) International Application No :PCT/JP2011/055317
Filing Date :08/03/2011
(87) International Publication No :WO 2011/111685
(61) Patent of Addition to Application Number :NA
Filing Date :NA
(62) Divisional to Application Number :NA
Filing Date :NA

(71)**Name of Applicant :**
1)HONDA MOTOR CO. LTD.
Address of Applicant :1 1 Minami Aoyama 2 chome Minato ku Tokyo 1078556 Japan
(72)**Name of Inventor :**
1)UMAHASHI Hideteru
2)SOETA Ryuhei
3)OGURA Kota

(57) Abstract :
A lighting device (70) for a vehicle is provided with an elastic member (84) provided at the end of a support arm (74) which is located on the side wall (61) side of a rear fender (41). The elastic member comprises in the outer peripheral edge (85) at the end of the elastic member which is located on the side wall side: a groove (86) which engages with a hole (73) in the side wall (61); and grooves (87 88) which are parallel to the support arm and which engage with ridges (101 102) of a cap (75) for affixing the support arm.

No. of Pages : 32 No. of Claims : 6

(12) PATENT APPLICATION PUBLICATION
(19) INDIA
(22) Date of filing of Application :06/09/2012
(21) Application No.7778/DELNP/2012 A
(43) Publication Date : 14/03/2014

(54) Title of the invention : ELASTIC BEARING BUSH ARRANGEMENT ELASTIC BEARING AND METHOD FOR PRODUCING THE ELASTIC BEARING BUSH ARRANGEMENT

(51) International classification :F16F1/38
(31) Priority Document No :10 2010 018 536.1
(32) Priority Date :28/04/2010
(33) Name of priority country :Germany
(86) International Application No :PCT/EP2011/056278
Filing Date :19/04/2011
(87) International Publication No :WO 2011/134850
(61) Patent of Addition to Application Number :NA
Filing Date :NA
(62) Divisional to Application Number :NA
Filing Date :NA

(71)**Name of Applicant :**
1)TRELLEBORG AUTOMOTIVE GERMANY GMBH
Address of Applicant :Erbacher Str. 50 64747 Breuberg Germany
(72)**Name of Inventor :**
1)MARX Peter
2)GTTLER Karsten

(57) Abstract :
The invention relates to an elastic bearing bush arrangement (10) for installing in a receptacle (60) in particular for use in a suspension of a motor vehicle comprising an inner core (20) an outer sleeve (30) and an elastomer body (50) connecting the inner core (20) and the outer sleeve (30) to each other wherein the outer sleeve (30) is made of plastic. The elastic bearing bush arrangement (10) is characterized in that the outer sleeve (30) has a press fit reinforcing element (40) for fixing the outer sleeve (30) in the receptacle (60) by means of a force (F) exerted directly on the receptacle (60) by the press fit reinforcing element (40). The invention further relates to an elastic bearing and to a method for producing an elastic bearing bush arrangement (10).

No. of Pages : 21 No. of Claims : 11

(12) PATENT APPLICATION PUBLICATION
(19) INDIA
(22) Date of filing of Application :06/09/2012
(21) Application No.7779/DELNP/2012 A
(43) Publication Date : 14/03/2014

(54) Title of the invention : SUPPORT OF REMOVABLE COMPONENTS IN A TEETH MODEL MANUFACTURED BY MEANS OF CAM

(51) International classification :A61C13/00
(31) Priority Document No :61/307,577
(32) Priority Date :24/02/2010
(33) Name of priority country :U.S.A.
(86) International Application No :PCT/DK2011/050057
Filing Date :24/02/2011
(87) International Publication No :WO 2011/103879
(61) Patent of Addition to Application Number :NA
Filing Date :NA
(62) Divisional to Application Number :NA
Filing Date :NA

(71)**Name of Applicant :**
1)3SHAPE A/S
Address of Applicant :Holmens Kanal 7 4. sal DK 1060 Copenhagen K Denmark
(72)**Name of Inventor :**
1)GILLES Brieuc
2)FISCHER David
3)LANG Morten Markussen
4)FISKER Rune
5)NONBOE Sven
6)TOFTH˜J Steen Frost

(57) Abstract :
Disclosed is a computer implemented method of generating a virtual model of a set of teeth for manufacturing a physical model of the set of teeth the method comprising: providing a virtual model of the set of teeth (402) the model comprising a gingival part (401) and a tooth configured to be part of a removable component (405) in the model; generating a cavity (407) in said gingival part said cavity comprising a cavity wall into which cavity said removable component fits such that an interface between the removable component (405) and the wall of the cavity (407) is defined where the removable component (405) and the cavity (407) are configured to provide a gap at said interface; and providing means (409) for supporting and positioning the removable component (405) in the cavity (407) where the means for supporting and postitioning are generated on one of said removable component and said cavity wall such that the means (409) for supporting and positioning extends across said gap between said removable component (405) and said cavity wall; wherein the area of contact between the removable component (405) and the cavity wall at said interface is controlled by the shape of the adjoining surfaces of the means (409) for supporting and positioning and the other of the removable component (405) and the cavity wall.

No. of Pages : 90 No. of Claims : 94

(12) PATENT APPLICATION PUBLICATION
(19) INDIA
(22) Date of filing of Application :06/09/2012
(21) Application No.7780/DELNP/2012 A
(43) Publication Date : 14/03/2014

(54) Title of the invention : OIL COMPOSITION AND TRACE AMOUNT OIL SUPPLY TYPE CUTTING/GRINDING PROCESSING METHOD

(51) International classification :C10M169/04,B23Q11/10,C10M101/04
(31) Priority Document No :2010054579
(32) Priority Date :11/03/2010
(33) Name of priority country :Japan
(86) International Application No :PCT/JP2010/072266
Filing Date :10/12/2010
(87) International Publication No :WO 2011/111277
(61) Patent of Addition to Application Number :NA
Filing Date :NA
(62) Divisional to Application Number :NA
Filing Date :NA

(71)**Name of Applicant :**
1)JX Nippon Oil & Energy Corporation
Address of Applicant :6 3 Otemachi 2 chome Chiyoda ku Tokyo 1008162 Japan
(72)**Name of Inventor :**
1)SHIBATA Junichi
2)SEMBONGI Norio
3)IBI Masanori
4)SUDA Satoshi

(57) Abstract :
Disclosed is an oil composition comprising a lubricant oil base oil and an alkylene oxide adduct of a hydroxy acid wherein the alkylene oxide adduct has a hydrophile lipophile index of 8 to 14. The oil composition can be used in a trace amount oil supply type cutting/grinding processing. Also disclosed is a trace amount oil supply type cutting/grinding processing method characterized by comprising a step of supplying the oil composition in the form of a mist to a part to be processed in a material of interest together with a compressed fluid.

No. of Pages : 28 No. of Claims : 7

(12) PATENT APPLICATION PUBLICATION
(19) INDIA
(22) Date of filing of Application :05/09/2012
(21) Application No.7739/DELNP/2012 A
(43) Publication Date : 14/03/2014

(54) Title of the invention : PAPER PALLET

(51) International classification :B65D19/34
(31) Priority Document No :PI 2010000964
(32) Priority Date :05/03/2010
(33) Name of priority country :Malaysia
(86) International Application No :PCT/MY2010/000321
Filing Date :09/12/2010
(87) International Publication No :WO 2011/108915
(61) Patent of Addition to Application Number :NA
Filing Date :NA
(62) Divisional to Application Number :NA
Filing Date :NA

(71)**Name of Applicant :**
1)AGROFLEET SDN BHD
Address of Applicant :28 Jalan Utarid U5/28 Seksyen U5 Mah Sing Integrated Industrial Park 40150 Shah Alam Selangor Malaysia
(72)**Name of Inventor :**
1)PANG Shaw Leong

(57) Abstract :
A pallet (100) made of recyclable paper materials for supporting goods to be transported by vehicle such as a forklift vehicle and methods for making the same is disclosed. The paper pallet (100) comprises a plurality of elongate members (200) that form a top portion of the pallet (100) a plurality of beams (300) secured to the plurality of elongate members (200) in a criss crossing manner to form a bottom portion of the pallet (100). Both the elongate members (200) and the beams (300) are constructed from a plurality of supporting elements (30 40) of different heights and a plurality of L shaped elements (20). The elements (20 30 40) are secured together by a securing means to form a sturdy pallet (100) structure.

No. of Pages : 22 No. of Claims : 22

(12) PATENT APPLICATION PUBLICATION
(19) INDIA
(22) Date of filing of Application :07/09/2012
(21) Application No.7860/DELNP/2012 A
(43) Publication Date : 14/03/2014

(54) Title of the invention : SYSTEM AND METHOD FOR SECURITY TAG DEPLOYMENT USING REVERSIBLE ADHESIVES

(51) International classification :G08B13/24,B23K13/01,C09J5/06
(31) Priority Document No :61/339778
(32) Priority Date :08/03/2010
(33) Name of priority country :U.S.A.
(86) International Application No :PCT/US2011/000422
Filing Date :03/03/2011
(87) International Publication No :WO 2011/112240
(61) Patent of Addition to Application Number :NA
Filing Date :NA
(62) Divisional to Application Number :NA
Filing Date :NA

(71)**Name of Applicant :**
1)SENSORMATIC ELECTRONICS LLC
Address of Applicant :6600 Congress Avenue Boca Raton FL 33487 U.S.A.
(72)**Name of Inventor :**
1)HO Wing Kei
2)PATTERSON Hubert A.

(57) Abstract :
A method and system for security tag attachment using a reversible adhesive in which a security tag has an outer surface and an inner volume. The tag includes at least one of an Electronic Article Surveillance (EAS) element and a Radio Frequency Identification (RFID) element disposed within the inner volume. The system also includes a reversible adhesive disposed on at least a portion of the outer surface.

No. of Pages : 25 No. of Claims : 20

(12) PATENT APPLICATION PUBLICATION
(21) Application No.7862/DELNP/2012 A
(19) INDIA
(22) Date of filing of Application :07/09/2012
(43) Publication Date : 14/03/2014

(54) Title of the invention : DATABASE MANAGEMENT METHOD COMPUTER SENSOR NETWORK SYSTEM AND DATABASE SEARCH PROGRAM

(51) International classification :G06F12/00,G06F17/30
(31) Priority Document No :2010090491
(32) Priority Date :09/04/2010
(33) Name of priority country :Japan
(86) International Application No :PCT/JP2010/062343
Filing Date :22/07/2010
(87) International Publication No :WO 2011/125237
(61) Patent of Addition to Application Number :NA
Filing Date :NA
(62) Divisional to Application Number :NA
Filing Date :NA

(71)**Name of Applicant :**
1)HITACHI, LTD
Address of Applicant :6-6, MARUNOUCHI 1- CHOME, CHIYODA-KU, TOKYO 100-8280, JAPAN
(72)**Name of Inventor :**
1)NAKANO Sadaki
2)MURO Keiro
3)FUJIWARA Shinji

(57) Abstract :
Disclosed is a database management method for reducing the amount of data stored in a database and facilitating tracking for identifying the site of an anomaly and the cause of the anomaly in a system for handling a multitude of sensor information of a plant. The disclosed database management method in a computer for managing a database includes a step upon receiving a query for the computer to analyze the query; a step for generating a first inquiry for searching compressed data on the basis of the analysis results of the query; a step for generating a second inquiry for executing a search with respect to time series data; a step for extracting predetermined data from a plurality of time series data that have been acquired on the basis of response results to the second inquiry; and a step for extracting data for outputting to a client computer from the extracted predetermined data and generating an output result.

No. of Pages : 107 No. of Claims : 28

(12) PATENT APPLICATION PUBLICATION
(19) INDIA
(22) Date of filing of Application :03/09/2012
(21) Application No.7645/DELNP/2012 A
(43) Publication Date : 14/03/2014

(54) Title of the invention : ONE COMPONENT AMBIENT CURABLE WATERBORNE COATING COMPOSITIONS RELATED METHODS AND COATED SUBSTRATES

(51) International classification :C08G18/08,C08G18/09,C08G18/50
(31) Priority Document No :61/309652
(32) Priority Date :02/03/2010
(33) Name of priority country :U.S.A.
(86) International Application No :PCT/US2011/026673
Filing Date :01/03/2011
(87) International Publication No :WO 2011/109386
(61) Patent of Addition to Application Number :NA
Filing Date :NA
(62) Divisional to Application Number :NA
Filing Date :NA

(71)**Name of Applicant :**
1)PPG INDUSTRIES OHIO INC.
Address of Applicant :3800 West 143rd Street Cleveland Ohio 44111 U.S.A.
(72)**Name of Inventor :**
1)SCHWENDEMAN Irina G.
2)KALSANI Venkateshwarlu
3)AMBROSE Ronald R.
4)FUHRY Mary Ann M.
5)SWARUP Shanti
6)CHASSER Anthony M.
7)MARTZ Jon
8)BOGGS Carol L.

(57) Abstract :
Disclosed are coating compositions that can be one component ambient curable and waterborne. The coating compositions include a polycarbodiimide a carboxylic acid functional polymer and a base. The polycarbodiimide is modified for hydrophilicity and is derived from a tetramethylxylylene diisocyanate. The base is present in the composition in an amount sufficient to provide the composition with a pH of at least 9.0.

No. of Pages : 33 No. of Claims : 16

(12) PATENT APPLICATION PUBLICATION
(19) INDIA
(22) Date of filing of Application :03/09/2012
(21) Application No.7647/DELNP/2012 A
(43) Publication Date : 14/03/2014

(54) Title of the invention : METHOD FOR TREATMENT OF LACTO N BIOSE CONTAINING SOLUTION

(51) International classification :A23L3/10,A23K1/10,A23K1/16
(31) Priority Document No :2010024436
(32) Priority Date :05/02/2010
(33) Name of priority country :Japan
(86) International Application No :PCT/JP2011/051915
Filing Date :31/01/2011
(87) International Publication No :WO 2011/096360
(61) Patent of Addition to Application Number :NA
Filing Date :NA
(62) Divisional to Application Number :NA
Filing Date :NA

(71)**Name of Applicant :**
1)MORINAGA MILK INDUSTRY CO. LTD.
Address of Applicant :33 1 Shiba 5 chome Minato ku Tokyo 1088384 Japan
2)INCORPORATED ADMINISTRATIVE AGENCY NATIONAL AGRICULTURE AND FOOD RESEARCH ORGANIZATION
(72)**Name of Inventor :**
1)KITAOKA Motomitsu
2)NISHIMOTO Mamoru
3)SHIMIZU Kanetada

(57) Abstract :
Provided is a treatment method for a lacto N biose containing solution. Said treatment includes preparing a lacto N biose containing solution with a pH of 2.0 5.5 at 25°C and subjecting said solution to heat treatment at a temperature 65°C or higher. Specifically provided are: a treatment method in which the lacto N biose containing solution is subjected to the heat treatment at a temperature of 65°C or higher while limiting thermal decomposition of the lacto N biose; the lacto N biose containing solution which has undergone the aforementioned treatment and a dried substance thereof; and a manufacturing method for products containing lacto N biose.

No. of Pages : 22 No. of Claims : 5

(12) PATENT APPLICATION PUBLICATION
(19) INDIA
(22) Date of filing of Application :10/09/2012
(21) Application No.7884/DELNP/2012 A
(43) Publication Date : 14/03/2014

(54) Title of the invention : WATER RESISTANT MEDICAL BANDAGING PRODUCT

(51) International classification :A61F13/00
(31) Priority Document No :61/312,425
(32) Priority Date :10/03/2010
(33) Name of priority country :U.S.A.
(86) International Application No :PCT/US2011/027867
Filing Date :10/03/2011
(87) International Publication No :WO 2011/112794
(61) Patent of Addition to Application Number :NA
Filing Date :NA
(62) Divisional to Application Number :NA
Filing Date :NA

(71)**Name of Applicant :**
1)BSN MEDICAL INC.
Address of Applicant :5825 Carnegie Boulevard Charlotte NC 28209 U.S.A.
(72)**Name of Inventor :**
1)EVANS John C.

(57) Abstract :
A water resistant article for positioning on an appendage to be treated comprises a knitted body constructed from synthetic yarns is provided wherein each of the synthetic yarns comprise a bundle of substantially parallel fine monofilaments.

No. of Pages : 19 No. of Claims : 7

(12) PATENT APPLICATION PUBLICATION
(19) INDIA
(22) Date of filing of Application :06/09/2012
(21) Application No.7790/DELNP/2012 A
(43) Publication Date : 14/03/2014

(54) Title of the invention : SYSTEM AND METHOD FOR PROTECTING CRYPTOGRAPHIC ASSETS FROM A WHITE BOX ATTACK

(51) International classification :H04L9/32
(31) Priority Document No :NA
(32) Priority Date :NA
(33) Name of priority country :NA
(86) International Application No :PCT/CA2010/000486
Filing Date :31/03/2010
(87) International Publication No :WO 2011/120125
(61) Patent of Addition to Application Number :NA
Filing Date :NA
(62) Divisional to Application Number :NA
Filing Date :NA

(71)**Name of Applicant :**
1)IRDETO CANADA CORPORATION
Address of Applicant :2500 Solandt Road Suite 300 Ottawa Ontario K2K 3G5 Canada
(72)**Name of Inventor :**
1)MUIR James
2)SUI Jiayuan
3)MURDOCK Daniel Elie
4)EISEN Philip Allan

(57) Abstract :
A digital signature generation (DSG) process which provides resistance against white box attackers is disclosed. This is done by applying specially selected data transformations to the inputs outputs and internal parameters of the algorithm. In particular the signatory s private key does not appear in the clear in our protected implementation. Our new white box implementation produces signatures that are compatible with signatures created by conventional implementations; thus our solution facilitates interoperability and can be used as a drop in replacement for conventional implementations. In particular we describe transformations to the key (d) and the generator domain parameter (usually denoted G or g) of the digital signature generation processes such that embodiments of the invention can produce signed messages which appear to a verifier as if the key (d) was used without actually ever using the key (d). This makes it impossible for an adversary to ever observe the key (d) as it is not actually used. Further embodiments include additional protections to make it even harder for an adversary to deduce the key (d) by observing the process which generates the digital signature.

No. of Pages : 37 No. of Claims : 20

(12) PATENT APPLICATION PUBLICATION
(19) INDIA
(22) Date of filing of Application :06/09/2012
(21) Application No.7771/DELNP/2012 A
(43) Publication Date : 14/03/2014

(54) Title of the invention : APPARATUS AND METHODS FOR PROVIDING INFORMATION ABOUT ONE OR MORE SUBTERRANEAN VARIABLES

(51) International classification :G01V1/40,G01V3/18
(31) Priority Document No :61/306478
(32) Priority Date :20/02/2010
(33) Name of priority country :U.S.A.
(86) International Application No :PCT/US2011/025431
Filing Date :18/02/2011
(87) International Publication No :WO 2011/103422
(61) Patent of Addition to Application Number :NA
Filing Date :NA
(62) Divisional to Application Number :NA
Filing Date :NA

(71)**Name of Applicant :**
1)BAKER HUGHES INCORPORATED
Address of Applicant :2929 Allen Parkway Suite 2100 Houston TX 77019 U.S.A.
(72)**Name of Inventor :**
1)BRANNON Harold Dean

(57) Abstract :
In some embodiments a method of obtaining information about at least one variable existing at a target location in an underground well bore and/or surrounding subterranean formation includes delivering a plurality of signal generating devices to the target location(s) emitting at least one detectable signal from the target location and receiving at least one such signal. Information about the variable(s) is derived from at least some of the received signals.

No. of Pages : 35 No. of Claims : 27

(12) PATENT APPLICATION PUBLICATION
(19) INDIA
(22) Date of filing of Application :10/09/2012
(21) Application No.7891/DELNP/2012 A
(43) Publication Date : 14/03/2014

(54) Title of the invention : ARTIFICIAL SWEETENERS AND PERFORMANCE

(51) International classification :A23L1/164,A23L1/09,A23L1/236
(31) Priority Document No :10156452.4
(32) Priority Date :15/03/2010
(33) Name of priority country :EPO
(86) International Application No :PCT/EP2011/053819
Filing Date :14/03/2011
(87) International Publication No :WO 2011/113799
(61) Patent of Addition to Application Number :NA
Filing Date :NA
(62) Divisional to Application Number :NA
Filing Date :NA

(71)**Name of Applicant :**
1)NESTEC S.A.
Address of Applicant :Avenue Nestle 55 CH 1800 Vevey Switzerland
(72)**Name of Inventor :**
1)LE COUTRE Johannes
2)VAN BLADEREN Peter
3)DAMAK Sami
4)STELLINGWERFF Trent

(57) Abstract :
The present invention relates to the field of nutritional compositions. In particular the present invention relates to a nutritional composition comprising sugar substitutes and to their use e.g. to increase exogenous carbohydrate oxidation which has been shown to increase performance for example the performance of athletes.

No. of Pages : 18 No. of Claims : 14

(12) PATENT APPLICATION PUBLICATION
(19) INDIA
(22) Date of filing of Application :10/09/2012
(21) Application No.7893/DELNP/2012 A
(43) Publication Date : 14/03/2014

(54) Title of the invention : A PREFORMED CONCENTRATE FOR DELIVERY OF WATER INSOLUBLE FILM FORMING POLYMERS

(51) International classification :C08F26/08
(31) Priority Document No :61/312476
(32) Priority Date :10/03/2010
(33) Name of priority country :U.S.A.
(86) International Application No :PCT/US2011/027822
Filing Date :10/03/2011
(87) International Publication No :WO 2011/112768
(61) Patent of Addition to Application Number :NA
Filing Date :NA
(62) Divisional to Application Number :NA
Filing Date :NA

(71)**Name of Applicant :**
1)ISP INVESTMENTS INC.
Address of Applicant :1011 Centre Road Suite 315 Wilmington DE 19805 U.S.A.
(72)**Name of Inventor :**
1)NARAYANAN Kolazi S.

(57) Abstract :
A preformed concentrate capable of forming emulsion/micro emulsion upon dilution with water for providing peripheral desiccating effect on leaves/crops comprising: (i) a water insoluble film forming polymer; (ii) a long chain substituted amide; and (iii) an oil soluble surfactant.

No. of Pages : 35 No. of Claims : 21

(12) PATENT APPLICATION PUBLICATION
(19) INDIA
(22) Date of filing of Application :11/01/2013

(21) Application No.109/MUMNP/2013 A
(43) Publication Date : 14/03/2014

(54) Title of the invention : BENEFIT DELIVERY PARTICLE PROCESS FOR PREPARING SAID PARTICLE COMPOSITIONS COMPRISING SAID PARTICLES AND A METHOD FOR TREATING SUBSTRATES

(51) International classification	:A61K8/11, A61K8/73, A61Q13/00
(31) Priority Document No	:1011905.5
(32) Priority Date	:15/07/2010
(33) Name of priority country	:U.K.
(86) International Application No	:PCT/EP2011/061782
Filing Date	:11/07/2011
(87) International Publication No	:WO 2012/007438
(61) Patent of Addition to Application Number	:NA
Filing Date	:NA
(62) Divisional to Application Number	:NA
Filing Date	:NA

(71)**Name of Applicant :**
1)HINDUSTAN UNILEVER LIMITED
Address of Applicant :Unilever House B.D. Sawant Marg Chakala Andheri East Mumbai 400 099 Maharashtra India
(72)**Name of Inventor :**
1)BARNETT Stuart Anthony
2)JONES Craig Warren
3)LIMER Adam John
4)MERRINGTON James
5)WINTER Jeremy Nicholas

(57) Abstract :
The invention provides a benefit agent delivery particle having an average diameter of less than 50 micron com -prising; at least one shell formed by a step-growth polymerisation reaction, preferably involving an isocyanate monomer, more preferably a urethane and/or a urea, interior said shell, at least one region formed by chain-growth polymerisation reaction (preferably a free-radical polymerisation) which does not involve an isocyanate, c) optionally, a benefit agent interior to said shell, and/or a deposition aid exterior to said shell. The invention further provides a process for the preparation of such particles wherein the shell is formed prior to the chain-growth polymerisation of the at least one region interior of the shell, preferably be forming the shell at a temperature at which the chain-growth reaction is inhibited. The invention further provides fully formulated products, preferably liquids and gels, which contain said benefit agent delivery particles and a method of treating substrates using said products.

No. of Pages : 75 No. of Claims : 15

(12) PATENT APPLICATION PUBLICATION
(19) INDIA
(22) Date of filing of Application :21/01/2011
(21) Application No.184/MUM/2011 A
(43) Publication Date : 14/03/2014

(54) Title of the invention : DIARYLACETYLENE HYDRAZIDE CONTAINING TYROSINE KINASE INHIBITORS

(51) International classification	:C07D213/16, C07D215/04
(31) Priority Document No	:NA
(32) Priority Date	:NA
(33) Name of priority country	:NA
(86) International Application No	:NA
Filing Date	:NA
(87) International Publication No	:N/A
(61) Patent of Addition to Application Number	:NA
Filing Date	:NA
(62) Divisional to Application Number	:NA
Filing Date	:NA

(71)**Name of Applicant :**
1)SUN PHARMA ADVANCED RESEARCH COMPANY LTD.
Address of Applicant :17/B, MAHAL INDUSTRIAL ESTATE, MAHAKALI CAVES ROAD, ANDHERI (E), MUMBAI - 400093, Maharashtra India
(72)**Name of Inventor :**
1)SENGUPTA, PRABAL
2)CHOKSHI HEMANT ASHVINBHAI
3)PURI CHETAN SURJITSINGH
4)CHIMANWALA SABBIRHUSEN YUSUFBHAI
5)MEHTA VARUN ANILKUMAR
6)DESAI DIPALI MANUBHAI
7)CHITTURI TRINADHA RAO
8)THENNATI RAJAMANNAR

(57) Abstract :
The present invention relates to novel diarylacetylene hydrazide compounds of formula (I) or pharmaceutically acceptable salt thereof, as tyrosine kinase inhibitors, the process for their preparation, and to the use of the compounds of formula (I) in the preparation of pharmaceutical compositions for the therapeutic treatment of disorders related to tyrosine kinases, in warm-blooded animals

No. of Pages : 71 No. of Claims : 10

(12) PATENT APPLICATION PUBLICATION
(19) INDIA
(22) Date of filing of Application :27/08/2012
(21) Application No.2489/MUM/2012 A
(43) Publication Date : 14/03/2014

(54) Title of the invention : SMART MODIFIED NANO CARRIERS (SMNC) FOR COSMECEUTICAL AND PHARMACEUTICAL APPLICATION

(51) International classification	:A61K 9/42, A61K 47/02
(31) Priority Document No	:NA
(32) Priority Date	:NA
(33) Name of priority country	:NA
(86) International Application No	:NA
Filing Date	:NA
(87) International Publication No	: NA
(61) Patent of Addition to Application Number	:NA
Filing Date	:NA
(62) Divisional to Application Number	:NA
Filing Date	:NA

(71)**Name of Applicant :**
1)SINGH KAMALINDER KAUR
Address of Applicant :C.U. SHAH COLLEGE OF PHARMACY, SNDT WOMEN'S UNIVERSITY, SIR VITHALDAS VIDYAVIHAR, JUHU CAMPUS, SANTACRUZ (WEST), MUMBAI - 400 049, Maharashtra India
(72)**Name of Inventor :**
1)SINGH KAMALINDER KAUR
2)PATIL SARITA LAXMAN

(57) Abstract :
The present invention is related to a cosmetic and/or pharmaceutical preparation with nano enabled dual/multicarrier system comprising of one or more than one lipid nanocarrier of similar kind such as nanosuspension, nanoemulsion, lipid nanoparticles, nanocrystals, nanospheres, nanopearls, polymeric nanoparticles, nanocapsules and their combinations thereof based on the suitability.More particularly, the invention is related to development of dual nano-enabled Smart Modified Nano Carrier system (SMNC) comprising of lipid nanocarrier (LN) and nanosuspension (NS) for topical application. Increasing need for safe and combination therapy has lead to the engineering of this new technology wherein the actives with two different properties, in terms of solubility; activity; release profile or those with compatibility and stability problem can be incorporated into a single system by making use of SMNC. More specifically, the invention is related to sunscreen composition with improved sun protection factor (SPF), minimum whitening effect on the skin (whitening effect results due to larger particle size of actives used in traditional sunscreens) and decreased skin penetration which is a majof concern of nano enabled sunscreens. It further reduces the number of actives and its concentration to be added in the sunscreen products.

No. of Pages : 30 No. of Claims : 14

(12) PATENT APPLICATION PUBLICATION
(19) INDIA
(22) Date of filing of Application :16/06/2012
(21) Application No.1742/MUM/2012 A
(43) Publication Date : 14/03/2014

(54) Title of the invention : AN INVASIVE BLOOD PRESSURE MONITOR WITH IMPROVED PERFORMANCE

(51) International classification	:A61B5/021, A61B5/0402
(31) Priority Document No	:NA
(32) Priority Date	:NA
(33) Name of priority country	:NA
(86) International Application No	:NA
Filing Date	:NA
(87) International Publication No	: NA
(61) Patent of Addition to Application Number	:NA
Filing Date	:NA
(62) Divisional to Application Number	:NA
Filing Date	:NA

(71)**Name of Applicant :**
1)LARSEN & TOUBRO LIMITED
Address of Applicant :L & T House Ballard Estate Mumbai 400 001 State of Maharashtra India and also having a place of business named as Medical Equipment & Systems Gate No. 5 Mysore Campus KIADB Industrial Area Hebbal Mysore-570018 Karnataka India
(72)**Name of Inventor :**
1)TRIPATHI Vijay Kumar;
2)GOSH Rajdeep;
3)SREEKANTAIAH Raghavendra Hulivana;

(57) Abstract :
The present invention relates to an integrated apparatus for physiological blood pressure monitoring of patients. The system comprises an enclosure means; a display means displays information through a graphical user interface; a capacitive touch keyboard having a push button on/off switch to turn on/off said apparatus; a power supply assembly comprises a battery charger and controller, a lithium-ion battery pack adapted to convert ac to dc power supply; analog signal acquisition modules; atleast one transducers connected to the patient at proximal end; a micro-controller operatively connected with the transducers , the controller comprises : an 8 channel ADC for the Pressure signal and transducer offset error measurement and 8 channel DAC for biasing the Circuit and transducer offset error removal. The transducer comprises a junction box ; a connector connected with the junction box at the distal end electrically and mechanically connected through a interfacing cable with the apparatus ;a push button switch for adjustment of zeroing.

No. of Pages : 34 No. of Claims : 18

(12) PATENT APPLICATION PUBLICATION
(19) INDIA
(22) Date of filing of Application :06/08/2009

(21) Application No.1824/MUM/2009 A
(43) Publication Date : 14/03/2014

(54) Title of the invention : A UNIFIED PROCESS OF NON-CONVENTIONAL SCOURING AND DYEING FOR COTTON TEXTILES

(51) International classification	:C09B 62/00, C09B 67/00
(31) Priority Document No	:NA
(32) Priority Date	:NA
(33) Name of priority country	:NA
(86) International Application No	:NA
Filing Date	:NA
(87) International Publication No	: NA
(61) Patent of Addition to Application Number	:NA
Filing Date	:NA
(62) Divisional to Application Number	:NA
Filing Date	:NA

(71)**Name of Applicant :**
1)INDIAN COUNCIL OF AGRICULTURAL RESEARCH
Address of Applicant :DIRECTOR,CENTRAL INSTITUTE FOR RESEARCH ON COTTON TECHNOLOGY, ADENWALA ROAD, MATUNGA, MUMBAI 400 019, Maharashtra India
(72)**Name of Inventor :**
1)NACHANE RAJAN PANDHARINATH
2)MEENA LALIT SHARMA

(57) Abstract :
The present invention provides A Unified Process Of Non-Conventional Scouring And Dyeing For Cotton Textiles. The process can be carried out in fiber and/or yarn and/or fabric forms, wherein, without any pre-treatment, the textile material is soaked in the aqueous solution of the dye containing a low concentration (0.05% - 0.2%) of non-ionic surfactant, and thereafter the usual procedure of dyeing is followed. The efficiency of the invention is evident by the increased dye-ability and washfastness properties of the cotton textile material.

No. of Pages : 16 No. of Claims : 5

(12) PATENT APPLICATION PUBLICATION
(19) INDIA
(22) Date of filing of Application :26/06/2012
(21) Application No.1828/MUM/2012 A
(43) Publication Date : 14/03/2014

(54) Title of the invention : IMPROVED PHARMACEUTICAL COMPOSITIONS OF ESOMEPRAZOLE

(51) International classification	:A61K9/54, A61K31/44, A61K31/4439
(31) Priority Document No	:NA
(32) Priority Date	:NA
(33) Name of priority country	:NA
(86) International Application No	:NA
Filing Date	:NA
(87) International Publication No	:N/A
(61) Patent of Addition to Application Number	:NA
Filing Date	:NA
(62) Divisional to Application Number	:NA
Filing Date	:NA

(71)**Name of Applicant :**
1)UNICHEM LABORATORIES LIMITED
Address of Applicant :UNICHEM BHAVAN, PRABHAT ESTATE, OFF. S. V. ROAD, JOGESHWARI (W), MUMBAI-400 102, Maharashtra India
(72)**Name of Inventor :**
1)DR. GEDALA VENKATA MURALI MOHAN BABU
2)DR. JAYANT RAJARAM BHINGE
3)MR. TUSHAR SONAWANE
4)MR. RUDRESH L. PATIL
5)MR. PADAMRAJ RATHORE

(57) Abstract :
The present invention relates to the pharmaceutical compositions of esomeprazole. The present invention relates to a gastric resistant multiple unit esomeprazole swallowable dosage form comprising of enteric coated pellets and process for their manufacture thereof.

No. of Pages : 30 No. of Claims : 9

(12) PATENT APPLICATION PUBLICATION
(19) INDIA
(22) Date of filing of Application :31/08/2012
(21) Application No.2542/MUM/2012 A
(43) Publication Date : 14/03/2014

(54) Title of the invention : BLOWING MACHINE WITH DEMOUNTABLE BLOWING STATIONS

(51) International classification	:B29C49/30, B23P11/00
(31) Priority Document No	:10 2011 053 577.2
(32) Priority Date	:13/09/2011
(33) Name of priority country	:Germany
(86) International Application No	:NA
Filing Date	:NA
(87) International Publication No	: NA
(61) Patent of Addition to Application Number	:NA
Filing Date	:NA
(62) Divisional to Application Number	:NA
Filing Date	:NA

(71)**Name of Applicant :**
1)KRONES AG
Address of Applicant :BOEHMERWALDSTRAE 5, 93073 NEUTRABLING, GERMANY
(72)**Name of Inventor :**
1)FLORIAN GELTINGER
2)EDUARD HANDSCHUH
3)JOSEF HAUSLADEN
4)THOMAS HOELLRIEGL
5)ULRICH LAPPE
6)MICHAEL NEUBAUER
7)THOMAS PHILIPP
8)JUERGEN SOELLNER
9)KLAUS VOTH

(57) Abstract :
A device (1) for forming plastic preforms (10) into plastic containers (20) with a mobile carrier (2) on which is arranged a plurality of blowing stations (8), wherein these blowing stations (8) each comprise blow mould carrier parts (6a, 6b) to hold blow mould parts (4a, 4b) and at least one of these blow mould carrier parts (6a, 6b) is mobile in relation to the other blow mould carrier part (6b, 6a) to open and close the blow mould, and wherein the blowing stations (8) each comprise a carrier element (82) to carry at least one blow mould carrier part (6a, 6b) and wherein the device (1) comprises a clean room (20) within which the plastic preforms (10) can be expanded into plastic containers (20). According to the invention, the blow mould carrier parts (6a, 6b) together with the carrier element (82) form a unit (80) which can be demounted as a whole from the carrier.

No. of Pages : 29 No. of Claims : 9

(12) PATENT APPLICATION PUBLICATION
(19) INDIA
(22) Date of filing of Application :21/01/2011
(21) Application No.181/MUM/2011 A
(43) Publication Date : 14/03/2014

(54) Title of the invention : GENERATION OF NON CONVENTIONAL ENERGY BY PLACING HYDRAULIC PUMP MECHANISMS AT THE ROADS TO GATHER COMPRESSSION EFFECT OF THE VARIOUS AUTOMOBILE VECHICLES PASSING THROUGH IT TO GENERATE PUMPED HYDRAULIC FLUID ENERGY AND SUBSEQUENTLY WITH THE HELP OF PUMPED HYDRAULIC FLUID ENERGY, HYDRAULIC MOTOR AND GENERATOR ELECTRICITY WILL BE GENERATED OR THIS PUMPED HYDRAULIC FLUID ENERGY CAN BE USED AS A FUEL OR FOR ANY OTHER APPLICATIONS OF USE.

(51) International classification	:F02B71/04, F02B71/02
(31) Priority Document No	:NA
(32) Priority Date	:NA
(33) Name of priority country	:NA
(86) International Application No	:NA
Filing Date	:NA
(87) International Publication No	:N/A
(61) Patent of Addition to Application Number	:NA
Filing Date	:NA
(62) Divisional to Application Number	:NA
Filing Date	:NA

(71)**Name of Applicant :**
1)SANTOSH ARVIND PRADHAN
Address of Applicant :'ARUNODAYA', PLOT NO.51, PIONEER HOUSING SOCIETY, SWAWLAMBI NAGAR, NAGPUR 440025 Maharashtra India
(72)**Name of Inventor :**
1)SANTOSH ARVIND PRADHAN

(57) Abstract :
I have placed 300 mm thickness of RCC Slab after the laying of Bolder Murram Metal at the bottom side of road. I have placed Hydraulic cylinder mechanisms 5 at the bottom side of each RCC Road sleepers 1 to gather compression effect of a RCC road track 1. I have placed sectional RCC road sleepers and this sectional RCC road sleeper are attached to the hydraulic cylinder mechanism lane with the help of steel fork. Whenever any Trucks, Buses, Trailers, Tippers, any type of Automobile vehicles, any type of loading vehicles 2 or any standard height and length vehicles will pass through these Hydraulic cylinder mechanisms 5 which is placed beneath the RCC road sleepers 1 i.e. at the bottom side of each RCC road sleepers 1 than due to self load or weight of Trucks, Buses, Trailers, Tippers, any type of Automobile vehicles, any type of loading vehicles 2 or any standard height and length vehicles it will press the sectional RCC road sleepers and hence it will give compression effect to Hydraulic cylinder mechanisms 5 and due to this compression effect the pistons or plungers placed inside the Hydraulic cylinder mechanisms 5 will get activated and will start reciprocating action with the help of springs placed in it and will give pumped hydraulic fluid energy. I have placed large numbers of Hydraulic cylinder mechanisms 5 at the bottom side of each RCC road sleepers 1 to get the huge volume of pumped hydraulic fluid. I have placed a common pipe line 12 to be connected through the set of 10 nos. individual galvanized milled steel pipes 8, galvanized tees 10, galvanized bends and non return valve 11. I have also placed non return valves 13 connected to the common pipe line 12 at a center distance or a pitch of 30 meters and I have also placed flow meters 14 connected to the common pipe line 12 at a center distance or a pitch of 100 meters. As the hydraulic fluid energy is passes through each of the galvanized milled steel pipes 8, galvanized tees 10, galvanized bends and non return valves 11 and through main common pipeline 12,1 will get a very big volume of pumped hydraulic fluid as energy. This volume of hydraulic fluid energy is being stored in milled steel fabricated tanks 15, FRP fabricated tanks or beneath the earth storage or in caverns. Hydraulic fluid energy generating through this pipelines will be directed to go to the hydraulic motor 16 and after impacting of hydraulic fluid energy in hydraulic motor 16 it will start rotating. The shaft of the hydraulic motor 16 is being coupled with the shaft of the generator 17 and after impacting of hydraulic fluid energy in hydraulic motor 16 it will start rotating along with the shaft of the generator 17 and after getting the required revolution per minute (RPM) generator 17 it will start producing electricity which will be controlled by the control panel 18 and later on send it to the power grid 19 for delivering the electricity to the customers. After impacting of hydraulic fluid energy in hydraulic motor 16 the residual hydraulic fluid energy will again be directed to go to the reversal air collection tank 20 and from there it will again go back to the Hydraulic cylinder mechanisms 5 and again after the reciprocating action pumped hydraulic fluid will be generated which will be used for further application of generating electricity or for any other application of use. The electricity generated by the above said procedure will be clean and environmentally friendly also. The location of milled steel fabricated tanks 15, FRP fabricated tanks or storage location of hydraulic fluid energy beneath the earth or in caverns can be decided where ever anybody wants to use it for generation of the electricity or for any other application of use also.

No. of Pages : 11 No. of Claims : 13

(12) PATENT APPLICATION PUBLICATION
(19) INDIA
(22) Date of filing of Application :30/08/2012
(21) Application No.2533/MUM/2012 A
(43) Publication Date : 14/03/2014

(54) Title of the invention : BLENDED EDIBLE VEGETABLE OIL

(51) International classification	:A23D7/005, C09B67/00
(31) Priority Document No	:NA
(32) Priority Date	:NA
(33) Name of priority country	:NA
(86) International Application No	:NA
Filing Date	:NA
(87) International Publication No	: NA
(61) Patent of Addition to Application Number	:NA
Filing Date	:NA
(62) Divisional to Application Number	:NA
Filing Date	:NA

(71)**Name of Applicant :**
1)N K PROTEINS LIMITED
Address of Applicant :3rd Floor Popular House Ashram Road Ahmedabad 380009 Gujarat India
(72)**Name of Inventor :**
1)Gandhi Pragnesh Mahendrakumar

(57) Abstract :
The present invention discloses a blended edible vegetable oil and process preparing thereof comprising blend of physically refined rice bran oil and double filtered groundnut oil to provide clear, homogenous edible oil with pleasant flavor, ideal fat composition and high smoke point containing composition keep kitchen environment hygienic, make it suitable for all types of cooking as well as deep frying and better frying stability. It contains higher amount of mono unsaturated fatty acid (MUFA) which has cholesterol lowering ability and maintains blood cholesterol level.

No. of Pages : 18 No. of Claims : 5

(12) PATENT APPLICATION PUBLICATION
(19) INDIA
(22) Date of filing of Application :31/08/2012
(21) Application No.2534/MUM/2012 A
(43) Publication Date : 14/03/2014

(54) Title of the invention : A PROCESS FOR PREPARATION OF HIGHLY PURE CYTIDINE 5' -DIPHOSPHATE CHOLINE AND ITS PHARMACEUTICALLY ACCEPTABLE ALKALI METAL SALTS.

(51) International classification	:A61K 31/7068; A61K31/7064
(31) Priority Document No	:NA
(32) Priority Date	:NA
(33) Name of priority country	:NA
(86) International Application No	:NA
Filing Date	:NA
(87) International Publication No	: NA
(61) Patent of Addition to Application Number	:NA
Filing Date	:NA
(62) Divisional to Application Number	:NA
Filing Date	:NA

(71)**Name of Applicant :**
1)HERBERT BROWN PHARMACEUTICAL & RESEARCH LABORATORIES
Address of Applicant :W-258-A, M.I.D.C. PHASE II, SHIVAJI UDYOG NAGAR, DOMBIVALI (E)-421203, DISTRICT- THANE, Maharashtra India
(72)**Name of Inventor :**
1)GUND, VITTHAL GENBHAU
2)PARDESHI, HITENDRA DINANATH
3)PATIL, DHONDIBA VITHOBA
4)THUBE, SANDIP ARUN

(57) Abstract :
The present invention relates to an economical, environment friendly and industrially feasible process for preparation of highly pure CDP-choline and its pharmaceutically acceptable alkali metal salts. More particularly, the present invention relates to process for preparation of highly pure monosodium salt of CDP-choline comprising steps of reacting cytidine-5 -monophosphate with morphol ine in presence of dicyclohexylcarbodiimide in methanol to obtain cytidine 5-monophosphate morpholidate; condensing cytidine 5-monophosphate morpholidate with phosphorylcholine chloride calcium salt in presence of hydrochloric acid followed by addition of anti-solvent to precipitate crude CDP-choline; purifying crude CDP-choline using-ion-exchange resin and eluting fractions of CDP-choline with acidic solution; concentrating the eluted fractions using nanofilteration technology; charcoalizing the concentrated solution of CDP-choline; converting CDP-choline to monosodium salt of CDP-choline, isolating monosodium salt of CDP-choline and purifying it with methanol.

No. of Pages : 23 No. of Claims : 7

(12) PATENT APPLICATION PUBLICATION
(19) INDIA
(22) Date of filing of Application :31/08/2012
(21) Application No.2535/MUM/2012 A
(43) Publication Date : 14/03/2014

(54) Title of the invention : SUBSTITUTED 3-(PYRIDIN-2-YLIMINO) BUTANAMIDE AS ANTICOAGULANTS.

(51) International classification	:C07D 285/12; C07D 213/56	(71)**Name of Applicant :** **1)NEELA MANISH BHATIA** Address of Applicant :PLOT NO 31, SHREE ASHTAVINAYAKNAGAR COOP. HSG. SC., KOLHAPUR : 416013 Maharashtra India
(31) Priority Document No	:NA	(72)**Name of Inventor :**
(32) Priority Date	:NA	**1)MRS. NEELA MANISH BHATIA**
(33) Name of priority country	:NA	**2)PRAFULLA BALKRISHNA CHOUDHARI**
(86) International Application No	:NA	**3)MANISH SUDESH BHATIA**
Filing Date	:NA	**4)SWAPNIL DASHRATH JADHAV**
(87) International Publication No	: NA	**5)RAKESH PANDIT DHAVALE**
(61) Patent of Addition to Application Number	:NA	
Filing Date	:NA	
(62) Divisional to Application Number	:NA	
Filing Date	:NA	

(57) Abstract :
The present invention deals with substituted 3-(pyridin-2-ylimino) butanamide compounds as anticoagulants and these compounds can be useful for treating and preventing thrombosis and thrombosis-related disorders, such as unstable angina, acute myocardial infarction, myocardial ischemia reperfusion injury, venous thrombosis, sepsis, glomerulonephritis and cerebrovascular disorder.

No. of Pages : 14 No. of Claims : 7

(12) PATENT APPLICATION PUBLICATION
(19) INDIA
(22) Date of filing of Application :31/08/2012
(21) Application No.2537/MUM/2012 A
(43) Publication Date : 14/03/2014

(54) Title of the invention : CAPACITY MODULATED SCROLL COMPRESSOR

(51) International classification	:F04B23/00, F04B41/00, F04B17/00, F04B49	(71)**Name of Applicant :** **1)EMERSON CLIMATE TECHNOLOGIES, INC.** Address of Applicant :1675 W. CAMPBELL ROAD SIDNEY, OHIO 45365 UNITED STATES OF AMERICA
(31) Priority Document No	:NA	(72)**Name of Inventor :**
(32) Priority Date	:NA	**1)MAGADUM SUNIL ANNAPPA**
(33) Name of priority country	:NA	**2)JUGE VINAYAK MADANRAO**
(86) International Application No	:NA	
Filing Date	:NA	
(87) International Publication No	: NA	
(61) Patent of Addition to Application Number	:NA	
Filing Date	:NA	
(62) Divisional to Application Number	:NA	
Filing Date	:NA	

(57) Abstract :
A compressor including a housing defining a suction pressure region and a discharge pressure region includes first and second scroll members forming compression pockets. A first chamber located on the first end plate of the first scroll member includes first and second passages and a first aperture extending therethrough and in communication with the first chamber. The first aperture provides communication between a compression pocket and the first chamber. A modulation assembly is located in the first chamber and includes a heater and a thermal valve. The valve is displaceable from a first position that isolates the first passage from the second passage and a second position that permits communication between the first and second passages. The valve is displaced as a result of a temperature change provided by the heater.

No. of Pages : 29 No. of Claims : 20

(12) PATENT APPLICATION PUBLICATION
(19) INDIA
(22) Date of filing of Application :05/09/2012

(21) Application No.2571/MUM/2012 A
(43) Publication Date : 14/03/2014

(54) Title of the invention : SUPPORT ARRANGEMENT FOR A TOWER IN A FOUNDATION OF A WIND TURBINE.

(51) International classification	:F03D1/00, F03D11/04
(31) Priority Document No	:NA
(32) Priority Date	:NA
(33) Name of priority country	:NA
(86) International Application No	:NA
Filing Date	:NA
(87) International Publication No	: NA
(61) Patent of Addition to Application Number	:NA
Filing Date	:NA
(62) Divisional to Application Number	:NA
Filing Date	:NA

(71)**Name of Applicant :**
1)SUZLON ENERGY LTD.
Address of Applicant :ONE EARTH, OPP. MAGARPATTA CITY, HADAPSAR, PUNE - 411028, Maharashtra India
(72)**Name of Inventor :**
1)JITENDRA DESHPANDE
2)SHIVAJI PATIL
3)PRAVIN BHANGALE
4)RATNAKAR BIRAJDAR
5)MANOJ JAGDALE

(57) Abstract :
The present invention relates to a supporting arrangement for a tower for a wind turbine. More particularly it relates to a system and method of installing and leveling Load Spreading Plate in the foundation of the wind turbine resulting in a more stable foundation by a faster and economical process and has more life time with lesser maintenance. The foundation of the present invention is capable of resisting very high upset loads and in a manner independent of the concrete of the foundation experiencing alternating localized compression and tension loading. Further, the combination of features incorporated in the disclosed embodiments of the present invention enable a foundation to withstand higher vibrations.

No. of Pages : 33 No. of Claims : 18

(12) PATENT APPLICATION PUBLICATION
(19) INDIA
(22) Date of filing of Application :05/09/2012
(21) Application No.2572/MUM/2012 A
(43) Publication Date : 14/03/2014

(54) Title of the invention : A METHOD AND SYSTEM FOR DYNAMIC MODELILNG OF DATA PROCESSING RULES IN DISTRIBUTING COMPUTING PLATFORMS

(51) International classification	:G06F17/30, G06Q30/00, G06N5/02
(31) Priority Document No	:NA
(32) Priority Date	:NA
(33) Name of priority country	:NA
(86) International Application No	:NA
Filing Date	:NA
(87) International Publication No	: NA
(61) Patent of Addition to Application Number	:NA
Filing Date	:NA
(62) Divisional to Application Number	:NA
Filing Date	:NA

(71)**Name of Applicant :**
1)TATA CONSULTANCY SERVICES LIMITED
Address of Applicant :NIRMAL BUILDING, 9TH FLOOR, NARIMAN POINT, MUMBAI 400021, Maharashtra India
(72)**Name of Inventor :**
1)ANTONY SINO
2)VARGHESE ABRAHAM

(57) Abstract :
A method and system facilitating a rule injection framework is disclosed herein. Using this framework various types of rules involved in big data processing/analytics are decoupled from map reduce tasks and externalized in-order to provide manageability and dynamic modification of the rules through the web interface. Framework provides an option to configure rule on structured sources like relational data and unstructured sources like email, documents and social media data. Rule modeler provides an option to model rules in an XML based language and stores in a rule repository. During runtime, a rule context is created to access the rule repository through REST over HTTP and rule details are transferred in JSON Similar format called RON (Rule Object Notation). The rule details are cached in memory across all slave nodes for the faster access by map and reduce tasks.

No. of Pages : 23 No. of Claims : 22

(12) PATENT APPLICATION PUBLICATION
(19) INDIA
(22) Date of filing of Application :05/09/2012
(21) Application No.2574/MUM/2012 A
(43) Publication Date : 14/03/2014

(54) Title of the invention : MODULAR FEMORAL PATIENT SPECIFIC JIG FOR TOTAL KNEE ARTHROPLASTY

(51) International classification	:A61F2/36, A61F2/28
(31) Priority Document No	:NA
(32) Priority Date	:NA
(33) Name of priority country	:NA
(86) International Application No	:NA
Filing Date	:NA
(87) International Publication No	: NA
(61) Patent of Addition to Application Number	:NA
Filing Date	:NA
(62) Divisional to Application Number	:NA
Filing Date	:NA

(71)**Name of Applicant :**
1)Indian Institute of Technology Bombay
Address of Applicant :Powai Mumbai 400076 Maharashtra India
(72)**Name of Inventor :**
1)Tapdiya Raghuveer Balaprasad
2)Vikas Dhruwdas Karade
3)Ravi Bhallamudi
4)Vijay Shetty

(57) Abstract :
An arthroplasty jig that includes a medial distal extending member configured to matingly receive and contact medial portion of a distal femur a lateral distal extending member configured to matingly receive and contact lateral portion of the distal femur an anterior extending member configured to matingly receive and contact patellofemoral portion of a knee joint and a base configured to accommodate the medial distal extending member the lateral distal extending member and the anterior extending member. Further at least one of the medial distal extending member the lateral distal extending member and the anterior extending member is removably secured to the base.

No. of Pages : 27 No. of Claims : 10

(12) PATENT APPLICATION PUBLICATION
(19) INDIA
(22) Date of filing of Application :05/09/2012
(21) Application No.2575/MUM/2012 A
(43) Publication Date : 14/03/2014

(54) Title of the invention : MODULAR KNEE JOINT IMPLANT FOR ANTHROPOMETRIC ANATOMICAL VARIATION

(51) International classification	:A61F2/76, A61F2/28, A61F2/30
(31) Priority Document No	:NA
(32) Priority Date	:NA
(33) Name of priority country	:NA
(86) International Application No	:NA
Filing Date	:NA
(87) International Publication No	: NA
(61) Patent of Addition to Application Number	:NA
Filing Date	:NA
(62) Divisional to Application Number	:NA
Filing Date	:NA

(71)**Name of Applicant :**
1)Indian Institute of Technology Bombay
Address of Applicant :Powai Mumbai 400076 Maharashtra India
(72)**Name of Inventor :**
1)Shah Darshan Sunil
2)Rupesh Eknath Ghyar
3)Ravi Bhallamudi
4)Vijay Shetty

(57) Abstract :
A total knee arthroplasty (TKA) implant includes a femoral sub assembly configured to be attached to the distal femur a tibial sub assembly configured to be attached to the tibia and an insert sub assembly provided in communication with the femoral sub assembly and the tibial sub assembly. Further the insert sub assembly is configured to provide desired degrees of freedom for at least one of said femoral subassembly and said tibial sub assembly. The desired degrees of freed is selected based on the type of surgery.

No. of Pages : 44 No. of Claims : 12

(12) PATENT APPLICATION PUBLICATION
(19) INDIA
(22) Date of filing of Application :27/08/2012
(21) Application No.2490/MUM/2012 A
(43) Publication Date : 14/03/2014

(54) Title of the invention : CENTRALIZED PARKING PAYMENT AND MONITORING SYSTEM USING GEO LOCATION ENABLED DEVICES

(51) International classification	:G06F19/00, G01C21/00
(31) Priority Document No	:NA
(32) Priority Date	:NA
(33) Name of priority country	:NA
(86) International Application No	:NA
Filing Date	:NA
(87) International Publication No	: NA
(61) Patent of Addition to Application Number	:NA
Filing Date	:NA
(62) Divisional to Application Number	:NA
Filing Date	:NA

(71)**Name of Applicant :**
1)Mr. Sunil Goel
Address of Applicant :Plot no.839 Sector 8 Gandhinagar-382007 Gujarat India
(72)**Name of Inventor :**
1)Mr. Sunil Goel
2)Mr. Aditya Aggarwal

(57) Abstract :
The present invention provides the system of centralized parking payment and monitoring which uses geo-location enabled devices such as iPhone android RIM devices mobile phones pagers and wireless mobile computers. Using such system person can get a parking receipt; do payment of parking in the paid parking area directly from his geo-location enabled devices without any intervention of any attendant. Simultaneously police or parking manager can also check the virtual parking receipt of the vehicle in the centralized parking system using geo-location enabled device. This invention provides cost effective time saving accurate and maintenance free system for payment of parking fees by the users as well as monitoring of the same remotely by parking authority.

No. of Pages : 17 No. of Claims : 13

(12) PATENT APPLICATION PUBLICATION
(19) INDIA
(22) Date of filing of Application :28/08/2012
(21) Application No.2491/MUM/2012 A
(43) Publication Date : 14/03/2014

(54) Title of the invention : MAGNETIC WATER TREATMENT DEVICE

(51) International classification	:C02F1/48, C02F1/68, C02F1/48
(31) Priority Document No	:NA
(32) Priority Date	:NA
(33) Name of priority country	:NA
(86) International Application No	:NA
Filing Date	:NA
(87) International Publication No	: NA
(61) Patent of Addition to Application Number	:NA
Filing Date	:NA
(62) Divisional to Application Number	:NA
Filing Date	:NA

(71)**Name of Applicant :**
1)DR. PATIL AJITKUMAR GORAKHANATH
Address of Applicant :2, SHANTA ASHISH 'C', IRLA LANE, VILE PARLE (WEST), MUMBAI - 400 056 Maharashtra India
(72)**Name of Inventor :**
1)DR. PATIL AJITKUMAR GORAKHANATH

(57) Abstract :
A magnetic water treatment device is a device for treatment of water by exposing it to magnetic field using specific arrangement of magnets and their housing. The water activated using this process is useful for drinking, agriculture and other purposes. When the water is exposed to the magnetic field in a proper manner, it gets activated and the size of molecule group gets reduced. This type of magnetic activation helps to reduce accumulation of hard scale, lime and similar deposits in the water. This also improves the taste of water and prevents forming of rust and or scale. A magnetic water treatment device consists of mild-steel cylindrical housing with circular slot to hold water pipe, pair of permanent magnet strips arranged in opposite directions facing each other. The device accepts water pipe of non-magnetic materials as per users dimensions. It is flame proof, water proof and can be installed in any position and can be used from both sides.

No. of Pages : 11 No. of Claims : 4

(12) PATENT APPLICATION PUBLICATION
(19) INDIA
(22) Date of filing of Application :06/09/2012
(21) Application No.2582/MUM/2012 A
(43) Publication Date : 14/03/2014

(54) Title of the invention : MULTI - STATION TEXTILE MACHINE, IN PARTICULAR TWO-FOR-ONE-TWISTING OR CABLING MACHINE

(51) International classification	:B65H54/74, D01H1/10, D01H1/16, D01H9/18
(31) Priority Document No	:102011113883.1
(32) Priority Date	:22/09/2011
(33) Name of priority country	:Germany
(86) International Application No	:NA
Filing Date	:NA
(87) International Publication No	: NA
(61) Patent of Addition to Application Number	:NA
Filing Date	:NA
(62) Divisional to Application Number	:NA
Filing Date	:NA

(71)**Name of Applicant :**
1)OERLIKON TEXTILE GMBH & CO. KG
Address of Applicant :LEVERKUSER STRASSE 65, D-42897 REMSCHEID, GERMANY
(72)**Name of Inventor :**
1)HANS GUGGEMOS
2)WALTER PEDE-VOGLER
3)ALEXANDER THALER
4)MANUEL WOELFLE

(57) Abstract :
It was the object of the invention to develop a multi-station textile machine of the type producing a high degree of flexibility with a simple structure. This object is achieved according to the invention in that the respective double spindle unit (1) has a centrally arranged carrier (2), in that the carrier (2) has a cross-member (20), which extends from one workstation to the other of the double spindle unit (1) and is supported by means of adjustable feet (26) on the ground, in that the carrier (2) furthermore has a centrally arranged hollow profile (21), which extends vertically from the cross-member (20) and in that the hollow profile (21) is at least configured to receive a bobbin removal device (31, 33) and for fastening a winding device (3).

No. of Pages : 21 No. of Claims : 12

(12) PATENT APPLICATION PUBLICATION
(19) INDIA
(22) Date of filing of Application :06/09/2012
(21) Application No.2583/MUM/2012 A
(43) Publication Date : 14/03/2014

(54) Title of the invention : COMBING MACHINE WITH VARIABLE SPEED CIRCULAR COMB

(51) International classification :D01G19/10, D01G19/16
(31) Priority Document No :BS2011A000124
(32) Priority Date :16/09/2011
(33) Name of priority country :Italy
(86) International Application No :NA
Filing Date :NA
(87) International Publication No : NA
(61) Patent of Addition to Application Number :NA
Filing Date :NA
(62) Divisional to Application Number :NA
Filing Date :NA

(71)**Name of Applicant :**
1)MARZOLI S.P.A.
Address of Applicant :VIA S. ALBERTO, 10 1-25036 PALAZZOLO SULLLOGLIO, BRESCIA, ITALY
(72)**Name of Inventor :**
1)PRANDINI GIROLAMO

(57) Abstract :
A combing machine envisages, between a motor (21) and a circular comb (20), a transmission device (30) having in input a motor shaft (36) with angular input speed (Win) and in output a driven shaft (19) with angular output speed (Wout), engaged with the circular comb (20). The ratio (R) between the angular output speed (Wout) and the angular input speed (Win) being defined, said ratio is variable depending on the angular position (a) of the circular comb and is between 1.55 and 0.45. In particular the ratio (R) depending on the angular position (a) is defined by the graph.

No. of Pages : 17 No. of Claims : 10

(12) PATENT APPLICATION PUBLICATION
(19) INDIA
(22) Date of filing of Application :24/08/2012
(21) Application No.2469/MUM/2012 A
(43) Publication Date : 14/03/2014

(54) Title of the invention : CONTAMINATION SENSOR POSITIONING IN A FLUID DISTRIBUTION SYSTEM

(51) International classification	:G01N33/00, G01N33/18
(31) Priority Document No	:NA
(32) Priority Date	:NA
(33) Name of priority country	:NA
(86) International Application No	:NA
Filing Date	:NA
(87) International Publication No	: NA
(61) Patent of Addition to Application Number	:NA
Filing Date	:NA
(62) Divisional to Application Number	:NA
Filing Date	:NA

(71)**Name of Applicant :**
1)TATA CONSULTANCY SERVICES LIMITED
Address of Applicant :Nirmal Building 9th Floor Nariman Point Mumbai 400021 Maharashtra India
(72)**Name of Inventor :**
1)Kadengal Jamsheeda
2)Sarangan Venkatesh
3)Vasan Arunchandar
4)Narayanan Iyswarya
5)Sivasubramaniam Anand

(57) Abstract :
System and computer implemented method for contamination sensor positioning in a fluid distribution system are described herein. In an implementation the computer implemented method includes defining an objective function influencing positioning of a plurality of contamination sensors in the fluid distribution system. Based on flow properties of a fluid circulating in the fluid distribution system at least one impact parameter is ascertained. The impact parameter is indicative of an impact of positioning a contamination sensor from the plurality of contamination sensors at a predetermined potential location in the fluid distribution system. Further the impact parameter takes into account a time of introduction of a contaminant into the fluid distribution system. Additionally a final location for positioning each contamination sensor from among the plurality of contamination sensors is determined based on the objective function and the at least one impact parameter.

No. of Pages : 43 No. of Claims : 14

(12) PATENT APPLICATION PUBLICATION
(19) INDIA
(22) Date of filing of Application :06/09/2012
(21) Application No.2578/MUM/2012 A
(43) Publication Date : 14/03/2014

(54) Title of the invention : A NOVEL METHOD FOR DETERMINING CRACKING CHARACTERISTICS OF FINE-GRAINED SOILS USING LASER MICROSCOPY

(51) International classification	:B09C 1/08, B03B5/00
(31) Priority Document No	:NA
(32) Priority Date	:NA
(33) Name of priority country	:NA
(86) International Application No	:NA
Filing Date	:NA
(87) International Publication No	: NA
(61) Patent of Addition to Application Number	:NA
Filing Date	:NA
(62) Divisional to Application Number	:NA
Filing Date	:NA

(71)**Name of Applicant :**
1)INDINAN INSTITUTE OF TECHNOLOGY, BOMBAY
Address of Applicant :INDINAN INSTITUTE OF TECHNOLOGY, BOMBAY, POWAI MUMBAI 400076, Maharashtra India
(72)**Name of Inventor :**
1)DR. D.N.SINGH

(57) Abstract :
Most of the studies dealing with cracking characteristics of the fine-grained soils focus on establishing the influence of various factors affecting cracking, after effects of cracking and cracking patterns. Mathematical models have also been developed based on the experimental results, from these studies, to estimate time of initiation of the crack, water content at this instant and the depth up to which these cracks propagate. However, validation of these parameters based on the real life measurements has not yet been demonstrated. In this situation, resorting to laser microscopy to capture cracking characteristics, particularly the depth of crack propagation, of finegrained soils appears to be quite useful. The method of measurement of cracking characteristics of the fine-grained soils uses a laser microscope. This methodology has been found to be quite useful in correlating dimensions of the crack with each other and its volume.

No. of Pages : 23 No. of Claims : 3

(12) PATENT APPLICATION PUBLICATION
(19) INDIA
(22) Date of filing of Application :06/09/2012
(21) Application No.2579/MUM/2012 A
(43) Publication Date : 14/03/2014

(54) Title of the invention : DETERMINATION OF SWELLING PROPERTIES OF SOILS FROM SUCTION MEASUREMENTS

(51) International classification	:C09K103/00, C09K17/42
(31) Priority Document No	:NA
(32) Priority Date	:NA
(33) Name of priority country	:NA
(86) International Application No	:NA
Filing Date	:NA
(87) International Publication No	: NA
(61) Patent of Addition to Application Number	:NA
Filing Date	:NA
(62) Divisional to Application Number	:NA
Filing Date	:NA

(71)**Name of Applicant :**
1)INDIAN INSTITUTE OF TECHNOLOGY, BOMBAY
Address of Applicant :INDIAN INSTITUTE OF TECHNOLOGY BOMBAY POWAI, MUMBAI 400076, Maharashtra India
(72)**Name of Inventor :**
1)DR.D.N.SINGH

(57) Abstract :
Expansive soils exhibit significantly high volumetric deformations and hence pose a serious threat to stability of structures and foundations. As such, determination of their swelling properties (viz., swelling potential and swelling pressure) becomes essential. Earlier researchers have developed various experimental techniques, and empirical relationships based on the results obtained from these investigations, for determination of swelling characteristics of these soils. However, though, these techniques help in direct estimation of the swelling properties of soils, the instrumentation is quite cumbersome and time consuming. This limitation can be overcome by measuring soil suction, which would also yield its swelling characteristics, though indirectly, but quite rapidly and easily. To demonstrate the utility and ease of application of this methodology, attempts were made to establish swelling properties of the expansive soils from their suction measurements in the present invention.

No. of Pages : 32 No. of Claims : 6

(12) PATENT APPLICATION PUBLICATION
(19) INDIA
(22) Date of filing of Application :04/01/2011

(21) Application No.20/MUM/2011 A
(43) Publication Date : 14/03/2014

(54) Title of the invention : SUBSTITUTED BIARYL OXAZOLIDINONES

(51) International classification	:C07D413/12, C07D417/10
(31) Priority Document No	:NA
(32) Priority Date	:NA
(33) Name of priority country	:NA
(86) International Application No	:NA
Filing Date	:NA
(87) International Publication No	: NA
(61) Patent of Addition to Application Number	:NA
Filing Date	:NA
(62) Divisional to Application Number	:NA
Filing Date	:NA

(71)**Name of Applicant :**
1)WOCKHARDT LIMITED
Address of Applicant :D-4 MIDC Industrial area Chikalthana Aurangabad - 431210 Maharashtra India
(72)**Name of Inventor :**
1)Patil Vijaykumar Jagdishwar
2)Trivedi Bharat kalidas
3)Patel Mahesh Vithalbhai
4)Solanki Manish
5)Patel Piyush

(57) Abstract :
Substituted biaryl oxazolidinones compounds of formula (I), method of their preparation and pharmaceutical compositions containing these compounds are provided.

No. of Pages : 38 No. of Claims : 17

(12) PATENT APPLICATION PUBLICATION
(19) INDIA
(22) Date of filing of Application :07/09/2012
(21) Application No.2596/MUM/2012 A
(43) Publication Date : 14/03/2014

(54) Title of the invention : A PROCESS FOR CONTINUOUS DE-SILICONIZATION AND DE-SULPHURIZATION OF HOT METAL.

(51) International classification	:C21C1/02, C21C1/04, C21C1/00
(31) Priority Document No	:NA
(32) Priority Date	:NA
(33) Name of priority country	:NA
(86) International Application No	:NA
Filing Date	:NA
(87) International Publication No	: NA
(61) Patent of Addition to Application Number	:NA
Filing Date	:NA
(62) Divisional to Application Number	:NA
Filing Date	:NA

(71)**Name of Applicant :**
1)JSW STEEL LIMITED
Address of Applicant :JINDAL MANSION, 5-A, DR. G. DESHMUKH MARG, MUMBAI - 400 026, STATE OF Maharashtra India
(72)**Name of Inventor :**
1)DABBIRU, SATISH KUMAR
2)KUMAR, ALOK
3)RAO, SURESH
4)GHORUI, PRABHAT
5)RAMACHANDRA, SEKHAR VADAREVU
6)RAO, DEVENDRA

(57) Abstract :
The present invention relates to a continuous process for simultaneous desiliconisation and de-sulphurisation of hot metal in a single step in transfer ladles at hot metal pre-treatment(HMPT) station utilizing electrochemistry of molten slag and molten metal system and applying the phenomenon of mixed potential at the slag metal interface. The process includes 1st stage de-siliconisation using lime fines, sinter fines and oxygen in a two lance process followed by de-sulphurization using lime fines through a single central lance in a continuous process in the same ladle and same HMPT station. The developed process does not require intermediate de-slagging and results in a lower temperature drop and has significantly reduced pre-treatment time and helped in optimizing the input hot metal characteristics for primary steelmaking.

No. of Pages : 12 No. of Claims : 10

(12) PATENT APPLICATION PUBLICATION
(21) Application No.2598/MUM/2012 A
(19) INDIA
(22) Date of filing of Application :07/09/2012
(43) Publication Date : 14/03/2014

(54) Title of the invention : INTELLIGENT FEEDER TRAY ARRANGEMENT FOR FEEDING PAPERS TO MULTIFUNCTION MACHINE AND A METHOD THEREOF

(51) International classification	:G06F13/00, G06F3/12, H04L29/06
(31) Priority Document No	:NA
(32) Priority Date	:NA
(33) Name of priority country	:NA
(86) International Application No	:NA
Filing Date	:NA
(87) International Publication No	: NA
(61) Patent of Addition to Application Number	:NA
Filing Date	:NA
(62) Divisional to Application Number	:NA
Filing Date	:NA

(71)**Name of Applicant :**
1)LARSEN & TOUBRO LIMITED
Address of Applicant :L & T HOUSE, BALLARD ESTATE, MUMBAI-400001, STATE OF Maharashtra India
(72)**Name of Inventor :**
1)PANCHAL, VINOD, MANILAL

(57) Abstract :
This invention relates generally to a system to provide proper orientation of paper in Copier, Scanning, Fax and Printing machines and a method thereof. More particularly it relates to an intelligent system for organizing one side used randomly loaded papers for the purpose of printing, copying and scanning and a method thereof. In this invention data processing means is configured to process input signal received from said sensory means for each side of papers and provide a signal to output means to transfer said papers to one of said output channels. It provides advantage of minimizing human interventions and encourages use of one side used papers.

No. of Pages : 12 No. of Claims : 7

(12) PATENT APPLICATION PUBLICATION
(19) INDIA
(22) Date of filing of Application :07/09/2012
(21) Application No.2599/MUM/2012 A
(43) Publication Date : 14/03/2014

(54) Title of the invention : A PROCESS FOR TREATING HIGH MN(>0.5%) HOT METAL IN LD CONVERTER.

(51) International classification	:C22C38/12, C21D8/00
(31) Priority Document No	:NA
(32) Priority Date	:NA
(33) Name of priority country	:NA
(86) International Application No	:NA
Filing Date	:NA
(87) International Publication No	: NA
(61) Patent of Addition to Application Number	:NA
Filing Date	:NA
(62) Divisional to Application Number	:NA
Filing Date	:NA

(71)**Name of Applicant :**
1)JSW STEEL LIMITED
Address of Applicant :JINDAL MANSION, 5-A, DR. G. DESHMUKH MARG, MUMBAI - 400 026, STATE OF Maharashtra India
(72)**Name of Inventor :**
1)DABBIRU, SATISH KUMAR
2)KUMAR, ALOK
3)BADAD, MADHUSUDAN ACHAR
4)RAMACHANDRA, SEKHAR VADAREVU
5)SURYANARAYANA, VISHWANATH
6)MUKHASALE, GANAPATHI PRASAD
7)GOTUR, GOPAL KRISHNA
8)RAMAPPA, SHIVMURTHY CHIKKABALLEKERE

(57) Abstract :
There is disclosed a process for treating high manganese (>0.5%) containing hot metal in LD converter to remove high amount of Mn without affecting the refractories and process parameters. The process favour oxidizing the Mn as early as possible and remove the high MnO slag from the converter through intermediate de-slagging so as to reduce the refractory erosion. As Mn is best oxidized under the conditions of low temperature, high FeO and low basicity in the slag, lime and dolomite additions have been suitably reduced to decrease the slag basicity and iron ore addition is introduced from 2-3 min of blow start to increase the FeO in the initial slag. The intermediate de-slagging just after complete de-siiiconization (20-30% of the blow time) where exact point is identified by the observing the change in the slope of CO-C02 curve of the off gas analysis and ensure least impact on the converter refractories which is exposed to high Mn slag for a very short duration and thereby minimizing its erosion.

No. of Pages : 14 No. of Claims : 11

(12) PATENT APPLICATION PUBLICATION
(19) INDIA
(22) Date of filing of Application :30/08/2012
(21) Application No.2529/MUM/2012 A
(43) Publication Date : 14/03/2014

(54) Title of the invention : RING BINDER IMPROVEMENT

(51) International classification :B42F13/00
(31) Priority Document No :11179411.1
(32) Priority Date :30/08/2011
(33) Name of priority country :EUROPEAN UNION
(86) International Application No :NA
Filing Date :NA
(87) International Publication No : NA
(61) Patent of Addition to Application Number :NA
Filing Date :NA
(62) Divisional to Application Number :NA
Filing Date :NA

(71)**Name of Applicant :**
1)U. S. RING BINDER, L.P.
Address of Applicant :6800 ARSENAL ST., ST. LOUIS, MISSOURI 63139, UNITED STATES OF AMERICA
(72)**Name of Inventor :**
1)BALAKRISHNAN PREMNATH
2)PAUL WHALEY

(57) Abstract :
A lever arch mechanism comprises a pair of binder rings (R) selectively movable between an open and a closed position to retain hole punched sheets of paper and the like and a plate (P) to which respective ends of the binder rings are mounted, A lever (L) mounted on the plate is operatively connected to the binder rings for movement of the lever in an appropriate direction to open and close the rings. A plurality of spurs (14) depend from an underside (16) of the plate for securely attaching the plate to a binder (C) whereby the lever arch mechanism is fastened to the binder and cannot be readily dislodged therefrom. Various spur patterns and spur configurations are described.

No. of Pages : 32 No. of Claims : 15

(12) PATENT APPLICATION PUBLICATION
(19) INDIA
(22) Date of filing of Application :30/08/2012
(21) Application No.2530/MUM/2012 A
(43) Publication Date : 14/03/2014

(54) Title of the invention : SHOE OPERATED PUMP

(51) International classification :A43B23/00
(31) Priority Document No :NA
(32) Priority Date :NA
(33) Name of priority country :NA
(86) International Application No :NA
Filing Date :NA
(87) International Publication No : NA
(61) Patent of Addition to Application Number :NA
Filing Date :NA
(62) Divisional to Application Number :NA
Filing Date :NA

(71)**Name of Applicant :**
1)GUDADHE MANGESH VASANTRAO
Address of Applicant :PROF. M. V. GUDADHE, SHRIKRISHNA PETH, AMRAVATI-444601, DIST.: AMRAVATI, Maharashtra India
(72)**Name of Inventor :**
1)GUDADHE MANGESH VASANTRAO

(57) Abstract :
An efficient and operator friendly device for spraying the insecticide etc. liquids is disclosed. The device is a pair of special shoes S whose compression-decompression is used as input energy for spraying the insecticide-liquid. As the person walks his/her left-leg and right-leg shoe gets compressed and decompressed alternatively. This compression and decompression provides energy to the piston P for its reciprocating motion inside the cylinder C via connecting mechanism of rack T and pinion gear G. As one of the shoes S is compressed, the energy of compression provides energy to the piston P (by means of rack T and pinion gear G assembly) to compress/pressurise the hydraulic/pneumatic fluid which has come into the cylinder C via inlet port. This pressurised hydraulic/pneumatic fluid passes through the pipe Hout to the hydraulic/pneumatic fluid reservoir R. Because of the wave of the pressurised hydraulic/pneumatic fluid, the valve of the reservoir R opens and actuates the exit tap/valve of the insecticide liquid tank I, thus spraying the insecticide. As the shoe S is decompressed (by means of spring D), the piston P is pulled back to its original position and sucks the hydraulic/pneumatic fluid inside the cylinder C via inlet port. As the left and right shoe gets compressed and decompressed alternatively, continuous spraying of the insecticide is ensured.

No. of Pages : 7 No. of Claims : 1

(12) PATENT APPLICATION PUBLICATION
(19) INDIA
(22) Date of filing of Application :30/08/2012
(21) Application No.2531/MUM/2012 A
(43) Publication Date : 14/03/2014

(54) Title of the invention : ANTI-FLUFF CASTER WHEELS

(51) International classification	:B60B 33/00; B60B 7/00
(31) Priority Document No	:NA
(32) Priority Date	:NA
(33) Name of priority country	:NA
(86) International Application No	:NA
Filing Date	:NA
(87) International Publication No	: NA
(61) Patent of Addition to Application Number	:NA
Filing Date	:NA
(62) Divisional to Application Number	:NA
Filing Date	:NA

(71)**Name of Applicant :**
1)KALPAR ENGINEERS PVT. LTD.
Address of Applicant :1809, GIDC, PHASE IV, WADHWAN - 363 035, Gujarat India
(72)**Name of Inventor :**
1)HIMANSHU PARMAR

(57) Abstract :
A caster wheel assembly comprises of a wheel which rotates about a pin, a first rotation means for enabling rotation of the wheel about a vertical axis, the pin is fixed to the singular fork at a first end of the fork. The first rotation means is adapted at a second end of the fork and a second rotation means for enabling rotation of the wheel about the pin. The caster assembly includes a clamping plate mounted on the second end of the singular fork through the first rotation means.

No. of Pages : 13 No. of Claims : 3

(12) PATENT APPLICATION PUBLICATION
(19) INDIA
(22) Date of filing of Application :11/09/2012
(21) Application No.2630/MUM/2012 A
(43) Publication Date : 14/03/2014

(54) Title of the invention : AN IMPROVED DRESSER TO MANUFACTURE ACTUAL FOUR POINT CONTACT BALL BEARING IN TWO RACES

(51) International classification	:F16C33/58, B24B53/08, F16C19/16
(31) Priority Document No	:NA
(32) Priority Date	:NA
(33) Name of priority country	:NA
(86) International Application No	:NA
Filing Date	:NA
(87) International Publication No	: NA
(61) Patent of Addition to Application Number	:NA
Filing Date	:NA
(62) Divisional to Application Number	:NA
Filing Date	:NA

(71)**Name of Applicant :**
1)SHARDAMANI TECHNICAL RESEARCH AND DEVELOPMENT PRIVATE LIMITED
Address of Applicant :3, VIJAY PLOT, GONDAL ROAD, RAJKOT. 360002 Gujarat India
(72)**Name of Inventor :**
1)DAYALAL GOVINDJI FATANIA

(57) Abstract :
Actual Four Point Contact Dresser comprising a Base, aStand, a Handle, a Bearing Assembly, a Cylinder, a Piston, a Gothic Arch Guide Plate, a Lever and a Diamond which in operation dress a Grinding wheel in Gothic Arch Formation resulting in Grinding of Gothic Arch Grooves of Outer & Inner Races of Actual Four Point Contact Bearing

No. of Pages : 10 No. of Claims : 6

(12) PATENT APPLICATION PUBLICATION
(19) INDIA
(22) Date of filing of Application :11/01/2013
(21) Application No.104/MUMNP/2013 A
(43) Publication Date : 14/03/2014

(54) Title of the invention : LINEAR BEARING WITH NESTED BEARING TRACKS

(51) International classification :F16C29/06
(31) Priority Document No :61/364525
(32) Priority Date :15/07/2010
(33) Name of priority country :U.S.A.
(86) International Application No :PCT/US2011/044163
Filing Date :15/07/2011
(87) International Publication No :WO 2012/009625
(61) Patent of Addition to Application Number :NA
Filing Date :NA
(62) Divisional to Application Number :NA
Filing Date :NA

(71)**Name of Applicant :**
1)THOMSON INDUSTRIES INC.
Address of Applicant :45 Hazelwood Drive Amherst NY 14228 UNITED STATES OF AMERICA
(72)**Name of Inventor :**
1)NG Alison

(57) Abstract :
A linear motion bearing assembly comprising a load bearing plate structure having at least a portion of a plurality of open axial ball tracks formed therein, each of said plurality of open axial ball tracks comprised of at least two concentric ball tracks. The ball tracks including an open load bearing portion, an open return portion and turnarounds interconnecting the load bearing and return portions. A plurality of bearing balls are disposed in the ball tracks. At lease one load bearing plate is axially positioned adjacent said load bearing plate structure for receiving load from the balls disposed in the load bearing portion of the ball tracks. Various outer housing sleeves are disclosed including a structure split axially and a monolithic structure.

No. of Pages : 44 No. of Claims : 20

(12) PATENT APPLICATION PUBLICATION
(19) INDIA
(22) Date of filing of Application :15/01/2013

(21) Application No.122/MUMNP/2013 A
(43) Publication Date : 14/03/2014

(54) Title of the invention : NUTRITIONAL COMPOSITIONS

(51) International classification :A23L1/302,A23L1/304,A23L1/305
(31) Priority Document No :1012539.1
(32) Priority Date :27/07/2010
(33) Name of priority country :U.K.
(86) International Application No :PCT/GB2011/051432
Filing Date :27/07/2011
(87) International Publication No :WO 2012/013975
(61) Patent of Addition to Application Number :NA
Filing Date :NA
(62) Divisional to Application Number :NA
Filing Date :NA

(71)**Name of Applicant :**
1)OMNICEUTICA LIMITED
Address of Applicant :Unit 14 Asfordby Business Park Melton Mowbray Leicestershire LE143JL U.K.
(72)**Name of Inventor :**
1)MARTYN Glen Patrick

(57) Abstract :
The invention relates to compositions comprising novel blends of nutritional ingredients and solid, semi-solid and beverage compositions comprising such blends. In particular, this invention relates to rehydration, energy and recovery beverages (e.g. sports drinks), compositions for support of weight management, as well as digestive, bone, cognitive and heart health.

No. of Pages : 38 No. of Claims : 20

(12) PATENT APPLICATION PUBLICATION
(19) INDIA
(22) Date of filing of Application :31/08/2012
(21) Application No.2541/MUM/2012 A
(43) Publication Date : 14/03/2014

(54) Title of the invention : AN IMPROVED ARRANGEMENT AND METHOD FOR IMPROVING RELIABILITY AND ELECTRICAL DURABILITY OF ARRANGEMENT FOR REVERSING APPLICATION USING ELECTROMAGNETIC SWITCHES & CONTACTORS

(51) International classification	:G11B5/48, H02H7/16, H02H7/18
(31) Priority Document No	:NA
(32) Priority Date	:NA
(33) Name of priority country	:NA
(86) International Application No	:NA
Filing Date	:NA
(87) International Publication No	: NA
(61) Patent of Addition to Application Number	:NA
Filing Date	:NA
(62) Divisional to Application Number	:NA
Filing Date	:NA

(71)**Name of Applicant :**
1)LARSEN & TOUBRO LIMITED
Address of Applicant :L & T HOUSE, BALLARD ESTATE, MUMBAI 400 001, STATE OF Maharashtra India
(72)**Name of Inventor :**
1)PANCHAL, VINOD, M.;

(57) Abstract :
The present invention relates to an improved arrangement for improving reliability and electrical durability of electromagnetic switches & contactors when used for revesing application. The arrangement comprising plurality of contact arrangement comprises TK1 and TK2, the arrangement has NC (Normally opended contacts) and NC (Normally closed contacts) on same block; a forward contactor (F); a reverse contractor(R); and an interposing contractor(C). When either forward or reverse contactor needs to be closed, inherent time delay of few milliseconds is introduced due to need for closing the Inter-posing contactor resulting in delayed closing of next contactor to be closed.

No. of Pages : 17 No. of Claims : 7

(12) PATENT APPLICATION PUBLICATION
(19) INDIA
(22) Date of filing of Application :11/09/2012
(21) Application No.2635/MUM/2012 A
(43) Publication Date : 14/03/2014

(54) Title of the invention : A SURFACE MODIFIED ZEOLITE FOR DRYING REFRIGERANTS

(51) International classification	:B01J 29/04, B01J 20/10
(31) Priority Document No	:NA
(32) Priority Date	:NA
(33) Name of priority country	:NA
(86) International Application No	:NA
Filing Date	:NA
(87) International Publication No	: NA
(61) Patent of Addition to Application Number	:NA
Filing Date	:NA
(62) Divisional to Application Number	:NA
Filing Date	:NA

(71)**Name of Applicant :**
1)RELIANCE INDUSTRIES LTD
Address of Applicant :3RD FLOOR, MAKER CHAMBERS IV, 222, NARIMAN POINT, MUMBAI - 400021, Maharashtra India
(72)**Name of Inventor :**
1)PURANIK VIJAYALAKSHMI RAVI
2)KUMAR PRAKASH
3)JASRA RAKSH VIR

(57) Abstract :
The present disclosure relates to a surface modified zeolite having formed pores therein, with apertures on the surface of the zeolite of diameter less than 4.4°A . without reduction of the pore volume. The present disclosure also relates to a process for the preparation of the surface modified zeolite and a method of selectively removing substances with molecular size below 4.4 A0 from fluids by using the surface modified adsorbents.

No. of Pages : 17 No. of Claims : 19

(12) PATENT APPLICATION PUBLICATION
(19) INDIA
(22) Date of filing of Application :11/09/2012
(21) Application No.2637/MUM/2012 A
(43) Publication Date : 14/03/2014

(54) Title of the invention : SYSTEM AND METHOD FOR ON-SITE DATA ACQUISITION AND TRANSMISSION

(51) International classification	:G06F17/00, G07F5/18, G07F9/00
(31) Priority Document No	:NA
(32) Priority Date	:NA
(33) Name of priority country	:NA
(86) International Application No	:NA
Filing Date	:NA
(87) International Publication No	: NA
(61) Patent of Addition to Application Number	:NA
Filing Date	:NA
(62) Divisional to Application Number	:NA
Filing Date	:NA

(71)**Name of Applicant :**
1)YOGESH PURUSHOTTAM GAJARALWAR
Address of Applicant :SAGAR APTS., N.I.T. LAYOUT, PLOT NO. 41, SWAVALAMBI NAGAR, NAGPUR- 440022 Maharashtra India
(72)**Name of Inventor :**
1)YOGESH PURUSHOTTAM GAJARALWAR

(57) Abstract :
A system for data acquisition and transmission is provided. The system comprises an equipment from which a data is to be acquired. The equipment comprises an electronically scannable identification code. The system further comprises a server in communication with a mobile phone. The server includes one or more processors configured to receive a message from the mobile phone. The message includes information that identifies the code that the mobile phone obtained from the equipment. The server is configured to compare the code received form the mobile phone with a repository of codes to validate the equipment from which data is to be acquired. The mobile phone is configured to automatically log on to the designated server on the code being validated by the server. The servei is further configured to instruct the mobile phone to capture a photograph of the data presented by the equipment and transmit the photograph to the server in communication with the mobile phone. The server converts the photograph tagged with the code to a pre-defined format. The server stores the data in the pre-defined format. A method is also provided.

No. of Pages : 21 No. of Claims : 10

(12) PATENT APPLICATION PUBLICATION
(19) INDIA
(22) Date of filing of Application :29/08/2012
(21) Application No.2517/MUM/2012 A
(43) Publication Date : 14/03/2014

(54) Title of the invention : A PROCESS FOR THE PRODUCTION OF YARN

(51) International classification	:D01G21/00, D01G99/00
(31) Priority Document No	:NA
(32) Priority Date	:NA
(33) Name of priority country	:NA
(86) International Application No	:NA
Filing Date	:NA
(87) International Publication No	: NA
(61) Patent of Addition to Application Number	:NA
Filing Date	:NA
(62) Divisional to Application Number	:NA
Filing Date	:NA

(71)**Name of Applicant :**
1)RELIANCE INDUSTRIES LIMITED
Address of Applicant :3RD FLOOR, MAKER CHAMBER IV, 222, NARIMAN POINT, MUMBAI 400021, Maharashtra India
(72)**Name of Inventor :**
1)BHARADWAJ, SANJAY KUMAR
2)AGGARWAL, ASHISH KUMAR
3)PAREEK, KESHAV
4)KELKAR, ANIL KRISHNA
5)DHOLE SUNIL

(57) Abstract :
The process comprises drawing the spun yarn through a drawing system comprising a plurality of godet pairs, each succeeding pair being maintained at a successively higher temperature than the preceding pair and, each godet within a pair rotating at the same speed with the exception of the last pair of godets, and each godet pair rotating at a relatively higher speed than the pair preceding it with the exception of the last pair of godets; and then winding the drawn yarn on a winder positioned downstream of the drawing system at a speed of 3 to 20% higher than the speed of the penultimate godet of the last godet pair. In this process, the last godet pair is configured in such a manner that the penultimate godet of the last godet pair rotates at a speed which is 2 to 8% lower than the speed of the last godet of the last godet pair and the speed of rotation of the penultimate godet is lower than the speed of the preceding godet pair of the system to cause an overfeed of yarn to the penultimate godet.

No. of Pages : 15 No. of Claims : 11

(12) PATENT APPLICATION PUBLICATION
(19) INDIA
(22) Date of filing of Application :18/09/2012
(21) Application No.2719/MUM/2012 A
(43) Publication Date : 14/03/2014

(54) Title of the invention : CONTACT CENTER MONITORING

(51) International classification	:G06F11/34
(31) Priority Document No	:13/408,830
(32) Priority Date	:29/02/2012
(33) Name of priority country	:U.S.A.
(86) International Application No	:NA
Filing Date	:NA
(87) International Publication No	:N/A
(61) Patent of Addition to Application Number	:NA
Filing Date	:NA
(62) Divisional to Application Number	:NA
Filing Date	:NA

(71)**Name of Applicant :**
1)AVAYA INC
Address of Applicant :211, MOUNT AIRY ROAD BASKING RIDGE NEW JERSEY 07920, UNITED STATES OF AMERICA
(72)**Name of Inventor :**
1)ONKAR BIRK
2)JEFF CHU
3)BARRETT DAVIS
4)RODNEY A. THOMSON
5)BRIAN J. REYNOLDS

(57) Abstract :
Methods and systems for providing a graphical depiction of a communication system incorporating multiple call centers distributed around the globe are provided. The user interface can present the graphical depiction in two or three dimensions. In addition, the user interface can provide a view of details concerning the performance of communication system components or events affecting the performance of such components, and can enable a supervisor to manipulate contact center parameters.

No. of Pages : 22 No. of Claims : 10

(12) PATENT APPLICATION PUBLICATION
(19) INDIA
(22) Date of filing of Application :27/09/2012
(21) Application No.2820/MUM/2012 A
(43) Publication Date : 14/03/2014

(54) Title of the invention : DEFINING ACTIVE ZONES IN A TRADITIONAL MULTI-PARTY VIDEO CONFERENCE AND ASSOCIATING METADATA WITH EACH ZONE

(51) International classification :H04N7/15
(31) Priority Document No :13/275,433
(32) Priority Date :18/10/2011
(33) Name of priority country :U.S.A.
(86) International Application No :NA
Filing Date :NA
(87) International Publication No : NA
(61) Patent of Addition to Application Number :NA
Filing Date :NA
(62) Divisional to Application Number :NA
Filing Date :NA

(71)**Name of Applicant :**
1)AVAYA INC
Address of Applicant :211, MOUNT AIRY ROAD BASKING RIDGE NEW JERSEY 07920 U.S.A.
(72)**Name of Inventor :**
1)ANAND PAITHANKAR
2)SRINIVASAN NARAYANAN

(57) Abstract :
A conference system provides metadata about the display of a multimedia stream to allow communication endpoints to control the format of a video conference. A multipoint control unit (MCU) can provide metadata that describes the display layout and other information about the multimedia stream. After setting up the conference, the MCU can generate a layout description in eXstensible Markup Language (XML) that can be sent to and understood by the communication endpoints. The communication endpoints can read and interpret the XML metadata to determine how the display layout is configured. If desired by the user, the communication endpoint can change the display layout or other multimedia stream function based on the received metadata.

No. of Pages : 42 No. of Claims : 10

(12) PATENT APPLICATION PUBLICATION
(19) INDIA
(22) Date of filing of Application :27/09/2012
(21) Application No.2821/MUM/2012 A
(43) Publication Date : 14/03/2014

(54) Title of the invention : SYSTEM AND METHOD FOR REDUCING HEADERS

(51) International classification :H04W28/06
(31) Priority Document No :13/538 064
(32) Priority Date :29/06/2012
(33) Name of priority country :U.S.A.
(86) International Application No :NA
Filing Date :NA
(87) International Publication No :N/A
(61) Patent of Addition to Application Number :NA
Filing Date :NA
(62) Divisional to Application Number :NA
Filing Date :NA

(71)**Name of Applicant :**
1)AVAYA INC
Address of Applicant :211, MOUNT AIRY ROAD BASKING RIDGE NEW JERSEY 07920 U.S.A.
(72)**Name of Inventor :**
1)KURT HASERODT

(57) Abstract :
A first message associated with a first communication session is received at a container. The first message is modified by adding a new header. The first message may be processed in the container. At least a portion of the new header is removed from the modified message. The removed portion of the new header is stored. The modified message without the removed portion is sent outside the container. A second message associated with the first communication message is received at the container. The stored portion of the new header is inserted into the second message. The second message with the inserted portion of the new header is processed in the container. The portion of the new header is removed from the second message and the second message is sent outside the container.

No. of Pages : 26 No. of Claims : 10

(12) PATENT APPLICATION PUBLICATION
(19) INDIA
(22) Date of filing of Application :27/08/2012
(21) Application No.2485/MUM/2012 A
(43) Publication Date : 14/03/2014

(54) Title of the invention : NANOSTRUCTURES OF N/ZNO FOR PHOTOELECTROCATALYSIS OF WATER IMPURITIES

(51) International classification	:G01N27/416, G01N27/22, G01N27/403, G01N
(31) Priority Document No	:NA
(32) Priority Date	:NA
(33) Name of priority country	:NA
(86) International Application No	:NA
Filing Date	:NA
(87) International Publication No	: NA
(61) Patent of Addition to Application Number	:NA
Filing Date	:NA
(62) Divisional to Application Number	:NA
Filing Date	:NA

(71)**Name of Applicant :**
1)DR. KESU YASHWANT RAJPURE
Address of Applicant :ELECTROCHEMICAL MATERIALS LABORATORY, DEPARTMENT OF PHYSICS, SHIVAJI UNIVERSITY, KOLHAPUR, 416 004 Maharashtra India
(72)**Name of Inventor :**
1)DR. SAMBHAJI SHIVAJI SHINDE
2)DR. KESU YASHWANT RAJPURE

(57) Abstract :
In present investigation, we have synthesized various nanostructures of N-doped zinc oxide thin films by chemical spray pyrolysis technique using zinc acetate and N,N-Dimethylformamide (HCON(CH3)2 at 450 °C substrate temperature on to the amorphous and conducting [Fluorine doped tin oxide (FTO), 5-10 Ω/cm2] glass substrates in aqueous and non-aqueous media. The photochemical and photocatalytic oxidation of oxalic acid in a photoelectrocatalytic (PEC) degradation reactor, at room temperature, under sunlight illumination, coated with nanostructures of NZO photocatalysts were investigated. The extent of the degree of mineralization has been confirmed by measuring chemical oxygen demand (COD) and total organic carbon (TOC).

No. of Pages : 14 No. of Claims : 9

(12) PATENT APPLICATION PUBLICATION
(19) INDIA
(22) Date of filing of Application :27/08/2012
(21) Application No.2486/MUM/2012 A
(43) Publication Date : 14/03/2014

(54) Title of the invention : TEST DATA GENERATOR

(51) International classification	:G06F17/30, G06F7/00
(31) Priority Document No	:NA
(32) Priority Date	:NA
(33) Name of priority country	:NA
(86) International Application No	:NA
Filing Date	:NA
(87) International Publication No	: NA
(61) Patent of Addition to Application Number	:NA
Filing Date	:NA
(62) Divisional to Application Number	:NA
Filing Date	:NA

(71)**Name of Applicant :**
1)TATA CONSULTANCY SERVICES LIMITED
Address of Applicant :NIRMAL BUILDING, 9TH FLOOR, NARIMAN POINT, MUMBAI 400021, Maharashtra India
(72)**Name of Inventor :**
1)VARADA, VEERA VENKATASATYA NARAYANA

(57) Abstract :
The present invention relates to a system and method for automatically generating production-like test data for testing mainframe application. Further, the invention provides a method of accepting tester data or requirements based upon which the required test data or the production-like test data is fetched or derived from the previously stored test fields. The fetched or derived test data is then populated for generating test data. The invention also provides a method of generating test plans for all the generated test data.

No. of Pages : 23 No. of Claims : 12

(12) PATENT APPLICATION PUBLICATION
(19) INDIA
(22) Date of filing of Application :27/08/2012
(21) Application No.2487/MUM/2012 A
(43) Publication Date : 14/03/2014

(54) Title of the invention : DYNAMIC IMAGE MODIFICATION FOR A COLOR DEFICIENT USER

(51) International classification :H04N9/64
(31) Priority Document No :NA
(32) Priority Date :NA
(33) Name of priority country :NA
(86) International Application No :NA
Filing Date :NA
(87) International Publication No : NA
(61) Patent of Addition to Application Number :NA
Filing Date :NA
(62) Divisional to Application Number :NA
Filing Date :NA

(71)**Name of Applicant :**
1)TATA CONSULTANCY SERVICES LIMITED
Address of Applicant :NIRMAL BUILDING, 9TH FLOOR, NARIMAN POINT, MUMBAI 400021, Maharashtra India
(72)**Name of Inventor :**
1)CHANDEL, PRIYANKA
2)DOKE, PANKAJ
3)LOBO, SYLVAN
4)GORE, KUSHAL
5)RAZA, RAMIZ
6)DEVKAR, SUJIT
7)SUNKA, PRAVEEN
8)KIMBAHUNE, SANJAY

(57) Abstract :
A system and method for detecting spectrum of colors that is indistinguishable to a color blind individual and modifying the colors to fade in or out to the shade of same color, is provided. While the partial color blind user is enabled to view and better distinguish colors that were problematic earlier, the present invention achieves a significant reduction in power consumption of the display device with this modified color set.

No. of Pages : 24 No. of Claims : 10

(12) PATENT APPLICATION PUBLICATION
(19) INDIA
(22) Date of filing of Application :06/09/2012
(21) Application No.2586/MUM/2012 A
(43) Publication Date : 14/03/2014

(54) Title of the invention : NOVEL POLYMORPH OF RETIGABINE DIHYDROCHLORIDE OF FORMULA I AND PROCESS FOR PREPARATION.

(51) International classification	:C07C249/02, C07C209/36
(31) Priority Document No	:NA
(32) Priority Date	:NA
(33) Name of priority country	:NA
(86) International Application No	:NA
Filing Date	:NA
(87) International Publication No	: NA
(61) Patent of Addition to Application Number	:NA
Filing Date	:NA
(62) Divisional to Application Number	:NA
Filing Date	:NA

(71)**Name of Applicant :**
1)ARCH PHARMALABS LIMITED
Address of Applicant :ARCH HOUSE, 541-A, MAROL-MAROSHI ROAD, MUMBAI, 400059, Maharashtra India
(72)**Name of Inventor :**
1)SAXENA SUDHANSHU
2)RANBHAN KAMLESH JAYANTILAL

(57) Abstract :
Disclosed herein are two different crystalline polymorphic forms of retigabine dihydrochloride of formula I referred as form I and form II. These forms are characterized by their 20 values on XRD and their crystal shapes. It also describes the process for the preparation of these forms.

No. of Pages : 18 No. of Claims : 10

(12) PATENT APPLICATION PUBLICATION
(19) INDIA
(22) Date of filing of Application :27/09/2012
(21) Application No.2826/MUM/2012 A
(43) Publication Date : 14/03/2014

(54) Title of the invention : BEAMING TO THE NEXT CONFERENCE OR BETWEEN CONCURRENT CONFERENCES

(51) International classification :H04N7/14
(31) Priority Document No :13/426, 332
(32) Priority Date :21/03/2012
(33) Name of priority country :U.S.A.
(86) International Application No :NA
Filing Date :NA
(87) International Publication No :N/A
(61) Patent of Addition to Application Number :NA
Filing Date :NA
(62) Divisional to Application Number :NA
Filing Date :NA

(71)**Name of Applicant :**
1)AVAYA INC
Address of Applicant :211, MOUNT AIRY ROAD BASKING RIDGE NEW JERSEY 07920 U.S.A.
(72)**Name of Inventor :**
1)MONI MANOR

(57) Abstract :
A conferencing system and method are described which enable conference participants to beam between back-to-back or concurrent conferences. Specifically, a conference participant is allowed to beam between two or more conferences by providing in-band signaling during a conference. The in-band signaling may include one or more commands to beam the conference participant between the two or more conferences without requiring the conference participant to hang up and redial the conference number.

No. of Pages : 29 No. of Claims : 10

(12) PATENT APPLICATION PUBLICATION
(19) INDIA
(22) Date of filing of Application :31/08/2012
(21) Application No.2543/MUM/2012 A
(43) Publication Date : 14/03/2014

(54) Title of the invention : RETAINING MEANS WITH AN AXIAL PASSAGE FOR RECEIVING A FORMAT PART

(51) International classification :F16B21/06
(31) Priority Document No :10 2011 053 786.4
(32) Priority Date :20/09/2011
(33) Name of priority country :Germany
(86) International Application No :NA
Filing Date :NA
(87) International Publication No : NA
(61) Patent of Addition to Application Number :NA
Filing Date :NA
(62) Divisional to Application Number :NA
Filing Date :NA

(71)**Name of Applicant :**
1)KRONES AG
Address of Applicant :BOEHMERWALDSTRASSE 5, 93073 NEUTRABLING, GERMANY
(72)**Name of Inventor :**
1)ROBERT KUEHN

(57) Abstract :
A retaining means (1) with an axial passage (3) for receiving a format part (4) is disclosed. The retaining means (1) comprises several damping tongues (17) facing in the direction of the format part (4), the clamping tongues (17) being angularly aligned against an outer lateral surface of the format part (4) and being elastically deformable. The format part (4) is held stationary in a first movement direction (E) by the clamping tongues (17) when its outer lateral surface is contacting the clamping tongues (17) and whereby the format part (4) is movable and / or guidable in a second movement direction (E), the second movement direction (E) being opposite to the first movement direction (E1). Furthermore the retaining means (1) comprises at least one adjustment means (9), wherein the surface contact between the respective clamping tongues (17) and the format part (4) is released upon actuation and / or upon a defined alignment of the at least one adjustment means (9)-

No. of Pages : 16 No. of Claims : 10

(12) PATENT APPLICATION PUBLICATION
(19) INDIA
(22) Date of filing of Application :31/08/2012
(21) Application No.2547/MUM/2012 A
(43) Publication Date : 14/03/2014

(54) Title of the invention : USER INPUT BASED DATA ENCRYPTION

(51) International classification	:G06F21/00, G06F12/14
(31) Priority Document No	:NA
(32) Priority Date	:NA
(33) Name of priority country	:NA
(86) International Application No	:NA
Filing Date	:NA
(87) International Publication No	: NA
(61) Patent of Addition to Application Number	:NA
Filing Date	:NA
(62) Divisional to Application Number	:NA
Filing Date	:NA

(71)**Name of Applicant :**
1)TATA CONSULTANCY SERVICES LIMITED
Address of Applicant :Nirmal Building 9th Floor Nariman Point Mumbai 400021 Maharashtra India
(72)**Name of Inventor :**
1)RAMASWAMY SATYANARAYANAN
2)Girija Shankar Vadrevu

(57) Abstract :
Systems and methods for securing data by a user input based data encryption are described. In one aspect of the invention the method may include receiving an authentication string from a user to authenticate access to the application. On successful authentication of the user the data to be secured is obtained from the user. The obtained data is then secured by encryption which results in generation of a private key. The private key is then associated with the authentication string to form a first secure key. The first secure key is stored with the encrypted data in a data file. The data file is then transferred to a server associated with the application. The data file in the server is further encrypted to generate a second secure key.

No. of Pages : 24 No. of Claims : 10

(12) PATENT APPLICATION PUBLICATION
(19) INDIA
(22) Date of filing of Application :12/09/2012
(21) Application No.2643/MUM/2012 A
(43) Publication Date : 14/03/2014

(54) Title of the invention : A METHOD FOR EFFICIENT DESIGNING AND OPERATING COOLING INFRASTRUCTURE IN A DATA CENTER

(51) International classification :G05D23/00,H05K7/20
(31) Priority Document No :NA
(32) Priority Date :NA
(33) Name of priority country :NA
(86) International Application No :NA
Filing Date :NA
(87) International Publication No : NA
(61) Patent of Addition to Application Number :NA
Filing Date :NA
(62) Divisional to Application Number :NA
Filing Date :NA

(71)**Name of Applicant :**
1)TATA CONSULTANCY SERVICES LIMITED
Address of Applicant :NIRMAL BUILDING, 9TH FLOOR, NARIMAN POINT, MUMBAI 400021, Maharashtra India
(72)**Name of Inventor :**
1)SINGH, AMARENDRA K
2)BHAGWAT, HARSHAD
3)SINGH, UMESH
4)AMARNATH, ROHAN
5)SIVASUBRAMANIAM, ANAND

(57) Abstract :
A method and system is disclosed for maintaining Power Usage Effectiveness (PUE) of a new data center constant or within narrow range around efficient level during ramping up stage of the data center. The method comprises of capturing a plurality of design and operational parameters of the data center, computing an efficient design for the data center at full occupancy, and maintaining the Power Usage Effectiveness constant or within narrow range around efficient level at a current occupancy during a ramp up period of the data center.

No. of Pages : 35 No. of Claims : 10

(12) PATENT APPLICATION PUBLICATION
(19) INDIA
(22) Date of filing of Application :27/09/2012
(21) Application No.2844/MUM/2012 A
(43) Publication Date : 14/03/2014

(54) Title of the invention : CONTEXT-BASED DYNAMIC ADJUSTMENT TO PACING ALGORITHM

(51) International classification	:G10L11/00
(31) Priority Document No	:13/403, 628
(32) Priority Date	:23/02/2012
(33) Name of priority country	:U.S.A.
(86) International Application No	:NA
Filing Date	:NA
(87) International Publication No	:N/A
(61) Patent of Addition to Application Number	:NA
Filing Date	:NA
(62) Divisional to Application Number	:NA
Filing Date	:NA

(71)**Name of Applicant :**
1)AVAYA INC
Address of Applicant :211, MOUNT AIRY ROAD BASKING RIDGE NEW JERSEY 07920 U.S.A.
(72)**Name of Inventor :**
1)JOYLEE KOHLER
2)ANDREW D. FLOCKHART
3)ROBERT C. STEINER

(57) Abstract :
A contact center is described along with various methods and mechanisms for administering the same. The contact center proposed herein provides the ability to, among other things, assess contextual information and adjust an outbound dialers pacing algorithm based on the assessment thereof. The contextual information may be obtained from sources that are inside the contact center and outside the contact center.

No. of Pages : 26 No. of Claims : 10

(12) PATENT APPLICATION PUBLICATION
(19) INDIA
(22) Date of filing of Application :11/09/2012
(21) Application No.2631/MUM/2012 A
(43) Publication Date : 14/03/2014

(54) Title of the invention : SOLVENT-FREE PROCESS FOR THE PREPARATION OF TRANSFLUTHRIN

(51) International classification	:C07C69/747, C07C67/00
(31) Priority Document No	:NA
(32) Priority Date	:NA
(33) Name of priority country	:NA
(86) International Application No	:NA
Filing Date	:NA
(87) International Publication No	: NA
(61) Patent of Addition to Application Number	:NA
Filing Date	:NA
(62) Divisional to Application Number	:NA
Filing Date	:NA

(71)**Name of Applicant :**
1)HERANBA INDUSTRIES LIMITED
Address of Applicant :101/102, KANCHANGANGA FACTORY LANE, BORIVALI (W) MUMBAI 400 092, Maharashtra India
(72)**Name of Inventor :**
1)SHETTY S. K.
2)NAIK JIGNESH
3)RAJAN A. VARATHA

(57) Abstract :
Disclosed is an eco-friendly, solvent free process for the preparation of pyrethroid insecticidal compound transfluthrin having high degree of purity.

No. of Pages : 8 No. of Claims : 3

(12) PATENT APPLICATION PUBLICATION
(19) INDIA
(22) Date of filing of Application :21/12/2012
(21) Application No.2864/MUMNP/2012 A
(43) Publication Date : 14/03/2014

(54) Title of the invention : METHOD FOR PRODUCTION OF F 18 LABELED AMYLOID BETA LIGAND

(51) International classification :A61K51/04,C07B59/00
(31) Priority Document No :10164948.1
(32) Priority Date :04/06/2010
(33) Name of priority country :EPO
(86) International Application No :PCT/EP2011/058819
Filing Date :30/05/2011
(87) International Publication No :WO 2011/151282
(61) Patent of Addition to Application Number :NA
Filing Date :NA
(62) Divisional to Application Number :NA
Filing Date :NA

(71)**Name of Applicant :**
1)PIRAMAL IMAGING SA
Address of Applicant :Route de lEcole 13 CH 1753 Martan Switzerland
(72)**Name of Inventor :**
1)BERNDT Mathias
2)FRIEBE Matthias
3)HULTSCH Christina
4)SAMSON Fabrice
5)OH Seung Jun
6)SMUDA Christoph

(57) Abstract :
This invention relates to methods, which provide access to [F-18]fluoropegylated (aryl/heteraryl vinyl)-phenyl methyl amine derivatives.

No. of Pages : 36 No. of Claims : 10

(12) PATENT APPLICATION PUBLICATION
(19) INDIA
(22) Date of filing of Application :28/09/2012
(21) Application No.2865/MUM/2012 A
(43) Publication Date : 14/03/2014

(54) Title of the invention : METHOD OF, AND SYSTEM AND LABEL FOR, AUTHENTICATING OBJECTS IN SITU

(51) International classification :G06K7/10
(31) Priority Document No :13/269,726
(32) Priority Date :10/10/2011
(33) Name of priority country :U.S.A.
(86) International Application No :NA
Filing Date :NA
(87) International Publication No : NA
(61) Patent of Addition to Application Number :NA
Filing Date :NA
(62) Divisional to Application Number :NA
Filing Date :NA

(71)**Name of Applicant :**
1)ZORTAG, INC.
Address of Applicant :233 EAST SHORE ROAD, #201 GREAT NECK, NY, 11023, US U.S.A.
(72)**Name of Inventor :**
1)SHARMA SATYA PRAKASH
2)GU XIANFENG
3)HART JAMES ROBERT

(57) Abstract :
A method of, and a system and a label for, authenticating an object in situ create an authentication pattern signature for the object to be authenticated, associate a random distribution of multiple, three-dimensional elements with the object, aim a portable, handheld, image capture device at the object to capture return light from the elements as a single image, verify from the single image that the elements are three-dimensional, process the single image to generate an image pattern of the elements, compare the image pattern with the authentication pattern signature, and indicate that the object is authentic when the image pattern matches the authentication pattern signature.

No. of Pages : 27 No. of Claims : 20

(12) PATENT APPLICATION PUBLICATION
(19) INDIA
(22) Date of filing of Application :28/09/2012
(21) Application No.2866/MUM/2012 A
(43) Publication Date : 14/03/2014

(54) Title of the invention : HYBRID OVERRUNNING CLUTCH ASSEMBLY AND METHOD OF MAKING SAME

(51) International classification :B23P11/00
(31) Priority Document No :61/550,561
(32) Priority Date :24/10/2011
(33) Name of priority country :U.S.A.
(86) International Application No :NA
Filing Date :NA
(87) International Publication No : NA
(61) Patent of Addition to Application Number :NA
Filing Date :NA
(62) Divisional to Application Number :NA
Filing Date :NA

(71)**Name of Applicant :**
1)BELL HELICOPTER TEXTRON INC.
Address of Applicant :P.O. BOX 482 FORT WORTH, TEXAS 76101, US U.S.A.
(72)**Name of Inventor :**
1)EHINGER RYAN T
2)OLSON ERIC S

(57) Abstract :
A hybrid overrunning clutch includes a metal outer race and a composite outer ring that are each sized and configured such that the metal race generates a preload on the composite outer race throughout the operational temperature of the clutch. The composite outer ring significantly reduces that total weight of the clutch, as compared to a completely metal outer race. The present application further includes a method of assembling the metal outer race and composite outer ring so that thermal expansion of the metal outer race creates the preload in the composite outer ring. The present application also includes a method of designing a hybrid overrunning clutch.

No. of Pages : 21 No. of Claims : 20

(12) PATENT APPLICATION PUBLICATION
(19) INDIA
(22) Date of filing of Application :12/01/2013
(21) Application No.117/MUMNP/2013 A
(43) Publication Date : 14/03/2014

(54) Title of the invention : NETWORK PLATFORM SYSTEM AND MANAGEMENT METHOD THEREOF

(51) International classification :G06F17/30
(31) Priority Document No :201010202383.2
(32) Priority Date :13/06/2010
(33) Name of priority country :China
(86) International Application No :PCT/CN2010/076013
Filing Date :16/08/2010
(87) International Publication No :WO 2011/156987
(61) Patent of Addition to Application Number :NA
Filing Date :NA
(62) Divisional to Application Number :NA
Filing Date :NA

(71)**Name of Applicant :**
1)SHENZHEN MPR TECHNOLOGY CO. LTD
Address of Applicant :Room 707 Dolly Science Building No.105 Meihua Road Futian Shenzhen Guangdong 518049 China
(72)**Name of Inventor :**
1)LI Zhengfang
2)LV Yingfeng
3)ZHOU Hong

(57) Abstract :
A network platform system and a network platform management method are provided. The A network platform system for implements implementing publishing and using services for an MPR by managing a unique code of a cross-media relating relationship of the MPR, and includes a publishing business management platform, a reader service platform, a publishing business database and a reader platform database. The publishing business management platform is used for issuing a unique code of a cross-carrier relating relationship of an MPR to a publisher; and is further used for synchronizing/issuing data in the publishing business database to the reader platform database; the reader service platform is connected to the reader platform database, and is used for obtaining multimedia information from the reader platform database according to a request submitted by a reader, and providing the multimedia information to the reader. By implementing the network platform system and the network platform management method, automatization and unification for publishing and using services of an MPR may be implemented, and a digital publishing service platform with copyright protection is provided for a publisher.

No. of Pages : 44 No. of Claims : 14

(12) PATENT APPLICATION PUBLICATION
(19) INDIA
(22) Date of filing of Application :28/08/2012
(21) Application No.2493/MUM/2012 A
(43) Publication Date : 14/03/2014

(54) Title of the invention : METHOD AND SYSTEM FOR DYNAMIC SELECTION OF RELIABILITY BY DATA PUBLISHING PROTOCOL WHILE PUBLISHING DATA

(51) International classification	:H04L9/00, G06F21/00
(31) Priority Document No	:NA
(32) Priority Date	:NA
(33) Name of priority country	:NA
(86) International Application No	:NA
Filing Date	:NA
(87) International Publication No	: NA
(61) Patent of Addition to Application Number	:NA
Filing Date	:NA
(62) Divisional to Application Number	:NA
Filing Date	:NA

(71)**Name of Applicant :**
1)TATA CONSULTANCY SERVICES LIMITED
Address of Applicant :NIRMAL BUILDING, 9TH FLOOR, NARIMAN POINT, MUMBAI 400021, Maharashtra India
(72)**Name of Inventor :**
1)BANDYOPADHYAY, SOMA
2)BHATTACHARYYA, ABHIJAN

(57) Abstract :
A system and method for dynamic selection of reliability by data publishing protocol while publishing data, comprising a constrained gateway device (102) being adapted to publish data by using a data publisher and adapted to send and receive acknowledgment messages, one or more subscriber devices (104) communicatively coupled with the constrained gateway device (102) and subscribed to the server (106) and adapted to send and receive acknowledgment messages, and a server (106) communicatively coupled with the constrained gateway device (102) and the one or more subscriber devices (104) and adapted to exchange the acknowledgement messages between the data publisher on the constrained gateway device (102) and the one or more subscriber devices (104) wherein the data publisher running on the constrained gateway device (102) has multiple reliability levels for publishing data and is adapted to dynamically select the reliability level based on available bandwidth and energy.

No. of Pages : 28 No. of Claims : 14

(12) PATENT APPLICATION PUBLICATION
(19) INDIA
(22) Date of filing of Application :07/09/2012
(21) Application No.2594/MUM/2012 A
(43) Publication Date : 14/03/2014

(54) Title of the invention : A PROCESS FOR PREPARATION OF ZIPRASIDONE OR SALT THEREOF

(51) International classification :C07D501/06
(31) Priority Document No :NA
(32) Priority Date :NA
(33) Name of priority country :NA
(86) International Application No :NA
Filing Date :NA
(87) International Publication No : NA
(61) Patent of Addition to Application Number :NA
Filing Date :NA
(62) Divisional to Application Number :NA
Filing Date :NA

(71)**Name of Applicant :**
1)WOCKHARDT LIMITED
Address of Applicant :D-4 MIDC Industrial area Chikalthana Aurangabad - 431210 Maharashtra India
(72)**Name of Inventor :**
1)Shaikh Zakir Gafoor
2)Shukla Jagdish Dattopant
3)Yadav Ramprasad
4)Merwade Arvind Yekanathsa
5)Deo Keshav

(57) Abstract :
The present invention relates to a process for the preparation of Ziprasidone or its pharmaceutically acceptable salt free from its impurities for example Oxindole comprises dissolving Crude Ziprasidone in a mixture of water and isopropyl alcohol and isolating Pure Ziprasidone or pharmaceutically acceptable salt.

No. of Pages : 9 No. of Claims : 10

(12) PATENT APPLICATION PUBLICATION
(19) INDIA
(22) Date of filing of Application :03/02/2011
(21) Application No.311/MUM/2011 A
(43) Publication Date : 14/03/2014

(54) Title of the invention : SPACER TUBE

(51) International classification	:F25B 39/00, F16H 63/00	(71)**Name of Applicant :** **1)ENDURANCE TECHNOLOGIES PRIVATE LIMITED** Address of Applicant :K-228, MIDC INDUSTRIAL AREA, WALUJ,AURANGABAD 431 136 Maharashtra India
(31) Priority Document No	:NA	(72)**Name of Inventor :**
(32) Priority Date	:NA	**1)PIMPLE VISHAL**
(33) Name of priority country	:NA	
(86) International Application No	:NA	
Filing Date	:NA	
(87) International Publication No	:N/A	
(61) Patent of Addition to Application Number	:NA	
Filing Date	:NA	
(62) Divisional to Application Number	:NA	
Filing Date	:NA	

(57) Abstract :
A fork assembly (1) of a vehicle, comprising a bracket assembly having an under bracket (52) and an upper bracket (54) connected by means of a steering shaft (56), said bracket assembly fixed on a fork pipe (58), said fork pipe (58) telescopically moveable inside an outer tube (60), wherein a polymeric spacer tube (100) is disposed between said fork pipe (58) supporting a spring (74) disposed inside said outer tube (60), said spacer tube (100) being connected to said fork pipe (58) by means of a fork bolt (72); thereby said fork bolt (72), spacer tube (100) and main spring (74) forming a fork pipe assembly (76); another outer tube (80) housing said fork pipe assembly (76) duly supported on a piston ring (78) which is connected via a seat pipe (82) to a socket bolt (86), a cap oil lock (84) being provided around the joint of said seat pipe (82) and said socket bolt (86).

No. of Pages : 23 No. of Claims : 6

(12) PATENT APPLICATION PUBLICATION
(19) INDIA
(22) Date of filing of Application :14/01/2013
(21) Application No.121/MUMNP/2013 A
(43) Publication Date : 14/03/2014

(54) Title of the invention : ELECTROCHEMICAL CELLS HAVING CURRENT-CARRYING STRUCTURES UNDERLYING ELECTROCHEMICAL REACTION LAYERS

(51) International classification	:H01M8/04, H01M8/00
(31) Priority Document No	:60/567648
(32) Priority Date	:04/05/2004
(33) Name of priority country	:U.S.A.
(86) International Application No	:PCT/CA2005/000669
Filing Date	:03/05/2005
(87) International Publication No	:WO/2005/106078
(61) Patent of Addition to Application Number	:NA
Filing Date	:NA
(62) Divisional to Application Number	:1295/MUMNP/2006
Filed on	:03/11/2006

(71)**Name of Applicant :**
1)SOCIETE BIC
Address of Applicant :14 RUL JEANNE D'ASNIERES, 92611 CLICHY, FRANCE
(72)**Name of Inventor :**
1)MCLEAN, GERARD FRANCIS
2)STUKAS,ANNA
3)SCHROOTEN, JEREMY

(57) Abstract :
An electrochemical cell structure has an electrical current-carrying structure which, at least in part, underlies an electrochemical reaction layer. The cell comprises an ion exchange membrane with a catalyst layer on each side thereof. The ion exchange membrane may comprise, for example, a proton exchange membrane. Some embodiments of the invention provide electrochemical cell layers which have a plurality of individual unit cells formed on a sheet of ion exchange membrane material.

No. of Pages : 46 No. of Claims : 37

(12) PATENT APPLICATION PUBLICATION
(19) INDIA
(22) Date of filing of Application :24/08/2012
(21) Application No.2463/MUM/2012 A
(43) Publication Date : 14/03/2014

(54) Title of the invention : HUMIDITY SENSOR BASED ON NANOSIZED METAL/POLYMER COMPOSITE

(51) International classification	:G03G9/093, G03G9/08, G03G9/097
(31) Priority Document No	:NA
(32) Priority Date	:NA
(33) Name of priority country	:NA
(86) International Application No	:NA
Filing Date	:NA
(87) International Publication No	: NA
(61) Patent of Addition to Application Number	:NA
Filing Date	:NA
(62) Divisional to Application Number	:NA
Filing Date	:NA

(71)**Name of Applicant :**
1)SECRETARY, DEPARTMENT OF INFORMATION TECHNOLOGY (DIT)
Address of Applicant :MINISTRY OF COMMUNICATION AND INFORMATION TECHNOLOGY, GOVERNMENT OF INDIA, ELECTRONICS NIKETAN, 6, CGO COMPLEX, LODHI ROAD, NEW DELHI - 110 003, INDIA
(72)**Name of Inventor :**
1)ADKAR DATTATRAYA
2)HAKE ABHAY
3)ADHYAPAK PARAG
4)MULIK UTTAMRAO
5)JADKAR SANDESH
6)AMALNERKAR DINESH

(57) Abstract :
A polymer nanocomposite comprising nanocrystalline copper compounds obtained from the group consisting of Cu2S and C1.96S embedded within a polymer matrix is disclosed in the present disclosure. The present disclosure further discloses a humidity sensing element and a humidity sensing device derived from said humidity sensing element. The humidity sensing element in accordance with the present disclosure comprises (i) a substrate coated with said polymer nanocomposite material and (ii) at least a pair of electrodes connected with at least one or both side (s) of said humidity sensing material.

No. of Pages : 31 No. of Claims : 11

(12) PATENT APPLICATION PUBLICATION
(19) INDIA
(22) Date of filing of Application :04/09/2012
(21) Application No.2565/MUM/2012 A
(43) Publication Date : 14/03/2014

(54) Title of the invention : SYSTEM AND METHOD FACILITATING COMMUNICATION IN AN ADAPTIVE VIRTUAL ENVIRONMENT

(51) International classification	:G06F17/30, G06F7/10
(31) Priority Document No	:NA
(32) Priority Date	:NA
(33) Name of priority country	:NA
(86) International Application No	:NA
Filing Date	:NA
(87) International Publication No	: NA
(61) Patent of Addition to Application Number	:NA
Filing Date	:NA
(62) Divisional to Application Number	:NA
Filing Date	:NA

(71)**Name of Applicant :**
1)TATA CONSULTANCY SERVICES LIMITED
Address of Applicant :NIRMAL BUILDING, 9TH FLOOR, NARIMAN POINT, MUMBAI 400021, Maharashtra India
(72)**Name of Inventor :**
1)CHANDEL, PRIYANKA
2)DOKE, PANKAJ
3)LOBO, SYLVAN
4)GORE, KUSHAL
5)RAZA, RAMIZ
6)DEVKAR, SUJIT
7)SUNKA, PRAVEEN
8)KIMBAHUNE, SANJAY

(57) Abstract :
A system and method facilitating communication in an adaptive virtual environment is disclosed. A virtual network creates one or more images of one or more communication device by emulating one or more features of said communication device. The emulated features are further synchronized in real-time such that the user is further allowed to customize the features stored in the virtual network. The first communication device communicates with the virtual network for supporting the execution of one or more images thus created by means of a virtual interface. An execution module present in the first communication device first installs and later runs one or more virtual images thus created. A unique number is generated by a processing device of the first communication device in order to provide an uninterrupted connectivity with people in contact list irrespective of the service provider thus chosen by the user.

No. of Pages : 21 No. of Claims : 12

(12) PATENT APPLICATION PUBLICATION
(19) INDIA
(22) Date of filing of Application :31/12/2012
(21) Application No.2926/MUMNP/2012 A
(43) Publication Date : 14/03/2014

(54) Title of the invention : RHAMM BINDING PEPTIDES

(51) International classification :C07K7/08,A61K38/17,A61P35/00
(31) Priority Document No :61/349970
(32) Priority Date :31/05/2010
(33) Name of priority country :U.S.A.
(86) International Application No :PCT/CA2011/000613
Filing Date :31/05/2011
(87) International Publication No :WO 2011/150495
(61) Patent of Addition to Application Number :NA
Filing Date :NA
(62) Divisional to Application Number :NA
Filing Date :NA

(71)**Name of Applicant :**
1)LONDON HEALTH SCIENCES CENTRE RESEARCH INC.
Address of Applicant :375 South Street London Ontario N6A 4G5 Canada
(72)**Name of Inventor :**
1)LUYT Leonard G.
2)TURLEY Eva A.
3)ESGUERRA Kenneth Virgel

(57) Abstract :
The present invention provides for peptides that bind to Receptor for Hyaluronic Acid Mediated Motility (RHAMM) molecules. More specifically provided are peptides capable of specifically binding RHAMM molecules and capable of binding RHAMM with substantially high affinity. These novel RHAMM binding peptides provide the basis for new imaging probes that can be used to identify cells expressing RHAMM and for methods of imaging prognosis diagnosis and treatment of conditions associated with RHAMM expression.

No. of Pages : 82 No. of Claims : 59

(12) PATENT APPLICATION PUBLICATION
(19) INDIA
(22) Date of filing of Application :17/02/2011
(21) Application No.443/MUM/2011 A
(43) Publication Date : 14/03/2014

(54) Title of the invention : PROCESS FOR PREPARING AMORPHOUS CEFDITOREN PIVOXIL

(51) International classification	:C07D501/00, A61K31/546
(31) Priority Document No	:NA
(32) Priority Date	:NA
(33) Name of priority country	:NA
(86) International Application No	:NA
Filing Date	:NA
(87) International Publication No	: NA
(61) Patent of Addition to Application Number	:NA
Filing Date	:NA
(62) Divisional to Application Number	:NA
Filing Date	:NA

(71)**Name of Applicant :**
1)Frichem Private Limited
Address of Applicant :12 Concord Bullock Road Band Stand Bandra West Mumbai -400 050 Maharashtra India
(72)**Name of Inventor :**
1)KUMAR Rajiv
2)CHAUHAN Yogendra Kumar
3)DUBEY Rajeev
4)JEJURKAR Bablu

(57) Abstract :
The Invention Disclosed herein is a process for preparing highly pure amorphous cefditoren pivoxil from crude cefditoren pivoxil.

No. of Pages : 11 No. of Claims : 10

(12) PATENT APPLICATION PUBLICATION
(19) INDIA
(22) Date of filing of Application :20/01/2011
(21) Application No.165/MUM/2011 A
(43) Publication Date : 14/03/2014

(54) Title of the invention : IMPROVED WEAR RESISTANT METAL PARTS AND METHOD OF MANUFACTURE THEREOF

(51) International classification	:B22F3/00, C22C1/05, C22C33/02
(31) Priority Document No	:NA
(32) Priority Date	:NA
(33) Name of priority country	:NA
(86) International Application No	:NA
Filing Date	:NA
(87) International Publication No	: NA
(61) Patent of Addition to Application Number	:NA
Filing Date	:NA
(62) Divisional to Application Number	:276/MUM/2005
Filed on	:14/01/2005

(71)**Name of Applicant :**
1)AIA Engineering Ltd.
Address of Applicant :115 G.V.M.M. Estate Odhav Road Ahmedabad-382 410 Maharashtra India
(72)**Name of Inventor :**
1)SUDHIR VAMAN BHIDE

(57) Abstract :
The present invention provides an improved wear resistant metal part. More particularly, the present invention provides an improved wear resistant metal part with mineral grains embedded therein on the wearing surface. The present invention also relates to a method for the manufacture of wear resistant metal parts by embedding mineral grains therein on the wear surface.

No. of Pages : 11 No. of Claims : 17

(12) PATENT APPLICATION PUBLICATION
(19) INDIA
(22) Date of filing of Application :30/08/2012
(21) Application No.2527/MUM/2012 A
(43) Publication Date : 14/03/2014

(54) Title of the invention : SYSTEM AND METHOD ENABLING LOAD BALANCING OF DISTRIBUTED COMPUTING PLATFORMS INVOLVED IN LARGE DATA PROCESSING

(51) International classification	:G06F15/173, G06F15/16
(31) Priority Document No	:NA
(32) Priority Date	:NA
(33) Name of priority country	:NA
(86) International Application No	:NA
Filing Date	:NA
(87) International Publication No	: NA
(61) Patent of Addition to Application Number	:NA
Filing Date	:NA
(62) Divisional to Application Number	:NA
Filing Date	:NA

(71)**Name of Applicant :**
1)TATA CONSULTANCY SERVICES LIMITED
Address of Applicant :NIRMAL BUILDING, 9TH FLOOR, NARIMAN POINT, MUMBAI 400021, Maharashtra India
(72)**Name of Inventor :**
1)ANTONY, SINO
2)VARGHESE, ABRAHAM

(57) Abstract :
A computer-implemented method and system for balancing load in a distributed computing platform while performing data processing tasks is disclosed herein. According to the method and system of the invention, data processing tasks of data extract, data transform and data load are performed by a cluster of nodes at specific time stamp. The data to be processed is extracted in assorted formats. Further the extracted data is combination of structured, unstructured and semi-structured data. The system further develops and scheduling the data flow model that represents the flow of data from the source node to a target node. Further, the system is adapted to transform the extracted data by injecting one or more rules and loading the data to the target node for future analysis and references.

No. of Pages : 23 No. of Claims : 10

(12) PATENT APPLICATION PUBLICATION
(19) INDIA
(22) Date of filing of Application :10/09/2012
(21) Application No.2624/MUM/2012 A
(43) Publication Date : 14/03/2014

(54) Title of the invention : COLUMN FORMWORK SYSTEM MADE OF ENGINEERING PLASTIC

(51) International classification	:E04G17/02, E04G9/05
(31) Priority Document No	:NA
(32) Priority Date	:NA
(33) Name of priority country	:NA
(86) International Application No	:NA
Filing Date	:NA
(87) International Publication No	: NA
(61) Patent of Addition to Application Number	:NA
Filing Date	:NA
(62) Divisional to Application Number	:NA
Filing Date	:NA

(71)**Name of Applicant :**
1)PATEL DAXA RAMESH
Address of Applicant :TATHATA, 33/B NANDIGRAM SOC. NO. 2, SINDHWAI MATA ROAD, PRATAPNAGAR, VADODARA - 390004 Gujarat India
(72)**Name of Inventor :**
1)PATEL DAXA RAMESH

(57) Abstract :
The present invention describes a column formwork system made of engineering plastic. This formwork is light in weight and can be easily installed, dismantled and transported from one construction site to another. Depending on the size of the column required, the formwork is installed. After the installation, the construction material is poured in the formwork system and then is allowed to cure. After being cured, the formwork system is removed from the constructed column. As it is made of plastic, it doesnt absorb water or react with the construction material giving good quality RCC finishing. The column formwork is highly versatile and can be reused for upto 100 times. Cleaning of the dismantled formwork can be easily done by washing with water. Thus the column formwork system is highly advantageous and eliminates the disadvantages of the currently used formwork systems.

No. of Pages : 34 No. of Claims : 16

(12) PATENT APPLICATION PUBLICATION
(19) INDIA
(22) Date of filing of Application :02/02/2011
(21) Application No.304/MUM/2011 A
(43) Publication Date : 14/03/2014

(54) Title of the invention : A PROCESS FOR THE PREPARATION OF CHLORO DERIVATIVE OF PANTOPRAZOLE

(51) International classification	:C07D401/12, A61K31/4439
(31) Priority Document No	:NA
(32) Priority Date	:NA
(33) Name of priority country	:NA
(86) International Application No	:NA
Filing Date	:NA
(87) International Publication No	: NA
(61) Patent of Addition to Application Number	:NA
Filing Date	:NA
(62) Divisional to Application Number	:NA
Filing Date	:NA

(71)**Name of Applicant :**
1)WOCKHARDT LIMITED
Address of Applicant :D-4 MIDC Industrial area Chikalthana Aurangabad - 431210 Maharashtra India
(72)**Name of Inventor :**
1)Gaikwad Kishor
2)Deshmukh Rajendra Dagadu
3)Rallapalli Sivakumar
4)Deo Keshav

(57) Abstract :
The present application relates to a process for the preparation of chloro derivative of pantoprazole of Formula II or pharmaceutical acceptable salt thereof Formula II wherein Cl group may be present at C4, C6, or C7 position.

No. of Pages : 22 No. of Claims : 10

(12) PATENT APPLICATION PUBLICATION
(19) INDIA
(22) Date of filing of Application :22/02/2011
(21) Application No.487/MUM/2011 A
(43) Publication Date : 14/03/2014

(54) Title of the invention : A PACKAGING LAMINATE

(51) International classification	:C23C14/10, B32B15/08
(31) Priority Document No	:NA
(32) Priority Date	:NA
(33) Name of priority country	:NA
(86) International Application No	:NA
Filing Date	:NA
(87) International Publication No	: NA
(61) Patent of Addition to Application Number	:NA
Filing Date	:NA
(62) Divisional to Application Number	:NA
Filing Date	:NA

(71)**Name of Applicant :**
1)BILCARE LIMITED
Address of Applicant :1028, SHIROLI, RAJGURUNAGAR, (TALUKA-KHED), PUNE 411 505, Maharashtra India
(72)**Name of Inventor :**
1)NAIK PRAFUL
2)MUKHERJEE SOMENATH

(57) Abstract :
The present disclosure relates to a packaging laminate comprising: i) a base comprising a metallic layer with a thickness ranging between 7 to 40 microns; ii) a paper layer with a thickness ranging between 30 to 60 GSM; and iii) an intermittent adhesive layer and a process for preparing the same.

No. of Pages : 16 No. of Claims : 22

(12) PATENT APPLICATION PUBLICATION
(19) INDIA
(22) Date of filing of Application :06/09/2012
(21) Application No.2585/MUM/2012 A
(43) Publication Date : 14/03/2014

(54) Title of the invention : COMB BAR FOR A SUCTION NOZZLE OF A WORKSTATION OF A TEXTILE MACHINE PRODUCING CROSS-WOUND BOBBINS

(51) International classification :B65H67/08
(31) Priority Document No :102011114765.2
(32) Priority Date :01/10/2011
(33) Name of priority country :Germany
(86) International Application No :NA
Filing Date :NA
(87) International Publication No : NA
(61) Patent of Addition to Application Number :NA
Filing Date :NA
(62) Divisional to Application Number :NA
Filing Date :NA

(71)**Name of Applicant :**
1)OERLIKON TEXTILE GMBH & CO. KG
Address of Applicant :LEVERKUSER STRASSE 65, D-42897 REMSCHEID, GERMANY
(72)**Name of Inventor :**
1)UTE HOLT
2)FRIEDHELM KLINGEN

(57) Abstract :
The invention relates to a comb bar for a suction nozzle of a workstation of a textile machine producing cross-wound bobbins, wherein the suction nozzle has a suction opening for pneumatically picking up a thread end, which has run onto the surface of a cross-wound bobbin after a thread break or a controlled thread cut and the comb bar arranged in the region of the suction opening is equipped with a fold and with a row of teeth for fixing the sucked up thread end. According to the invention it is provided that the comb bar (19), in the region of its fold (31), has a least one structured face (32), which is produced by a photochemical etching method.

No. of Pages : 12 No. of Claims : 4

(12) PATENT APPLICATION PUBLICATION
(21) Application No.392/MUM/2011 A
(19) INDIA
(22) Date of filing of Application :10/02/2011
(43) Publication Date : 14/03/2014

(54) Title of the invention : GENERATION OF HYDRAULIC FLUID ENERGY BY PLACING HYDRAULIC PUMP MECHANISMS BETWEEN THE FRONT/REAR AXLE ASEMBLY AND THE CHASSIS/BODY OF ANY TYPE OF TRAINS TO GATHER COMPRESSION EFFECT WHEN IT IS IN RUNNING MODE TO GENERATE PUMPED HYDRAULIC FLUID AND SUBSEQUENTLY BY THE USE OF THIS PUMPED HYDRAULIC FLUID ELECTRICITY WILL BE GENERATED WITH THE HELP OF HYDRAULIC MOTOR AND GENERATOR OR THIS PUMPED HYDRAULIC FLUID CAN ALSO BE USED TO DRIVE THE HYDRAULIC MOTOR PRESENT IN ANY TYPE OF TRAINS....OF USE.

(51) International classification	:F02B71/04, F02B71/02
(31) Priority Document No	:NA
(32) Priority Date	:NA
(33) Name of priority country	:NA
(86) International Application No	:NA
Filing Date	:NA
(87) International Publication No	: NA
(61) Patent of Addition to Application Number	:NA
Filing Date	:NA
(62) Divisional to Application Number	:NA
Filing Date	:NA

(71)**Name of Applicant :**
1)SANTOSH ARVIND PRADHAN
Address of Applicant :'ARUNODAYA',PLOT NO.51,PIONEER HOUSING SOCIETY, SWAWLAMBI NAGAR, NAGPUR 440025 Maharashtra India
(72)**Name of Inventor :**
1)SANTOSH ARVIND PRADHAN

(57) Abstract :
I have placed Hydraulic power pack which is being attached to the several linear motion actuated hydraulic pump mechanisms. I have placed several linear motion actuated Hydraulic pump mechanisms between the gaps of front axle assembly to rear axle assembly of a railway engine / railway bogies / railway wagons / metro rail / metro rail wagons / metro rail bogies or any other type of railway vehicles. The linear motion actuated hydraulic pump mechanisms has been attached to the front axle assembly, rear axle assembly at one side of a railway engine / railway bogies / railway wagons / metro rail / metro rail wagons / metro rail bogies or any other type of railway vehicles and to chassis body of a railway engine / railway bogies / railway wagons / metro rail / metro rail wagons / metro rail bogies or any other type of railway vehicles on another side on railway engine / railway bogies / railway wagons / metro rail / metro rail wagons / metro rail bogies or any other type of railway vehicles or on any type of Automobile vehicles or on any type of vehicles which are running on road / earth to gather compression effect of railway engine / railway bogies / railway wagons / metro rail / metro rail wagons / metro rail bogies or any other type of railway vehicles or of any type of Automobile vehicles or on any type of vehicles which are running on road / earth. The linear motion actuated hydraulic pump mechanisms has been attached to the front axle assembly, rear axle assembly at one side and to chassis body on another side just like shock ups in any automobile vehicles. Whenever railway engine / railway bogies / railway wagons / metro rail / metro rail wagons / metro rail bogies or any other type of railway vehicles or any type of Automobile vehicles or on any type of vehicles which are running on road / earth or any standard height and length vehicles will start running than due to uneven waviness present in any type of roads or uneven waviness in any type of Railway tracks the linear motion actuated hydraulic pump mechanisms attached in railway engine /railway bogies / railway wagons / metro rail / metro rail wagons / metro rail bogies or any other type of railway vehicles or in any type of Automobile vehicles or on any type of vehicles which are running on road / earth or any standard height and length vehicles will get activated and it will start reciprocating action with the help of springs placed in it and will give pumped hydraulic fluid energy. I have placed large numbers of linear motion actuated Hydraulic pump mechanisms between the gaps of front axle assembly to rear axle assembly on railway engine / railway bogies / railway wagons/ metro rail / metro rail wagons / metro rail bogies or any other type of railway vehicles to get the continuous volume of pumped hydraulic fluid as energy. As the hydraulic fluid energy is passes through each of the galvanized milled steel pipes, galvanized tees, galvanized bends and non return valves and through main common pipeline, I will get a very big volume of continuous pumped hydraulic fluid as energy. Hydraulic fluid energy generating through this hydraulic power pack and pipelines will be directed to go to the hydraulic motor and after impacting of hydraulic fluid energy in hydraulic motor it will start rotating. The shaft of the hydraulic motor is being coupled with the shaft of the generator and after impacting of hydraulic fluid energy in hydraulic motor it will start rotating along with the shaft of the generator and after getting the required revolution per minute (RPM) generator it will start producing electricity which will be controlled by the control panel and this electricity generated can be used to drive railway engine / railway bogies / railway wagons / metro rail / metro rail wagons / metro rail bogies or any other type of railway vehicles or any type of Automobile vehicles or on any type of vehicles which are running on road / earth or any standard height and length vehicles with the help of electric motor or this electricity generated can be used to charge any type of batteries present in any type of railway engine / railway bogies / railway wagons / metro rail / metro rail wagons / metro rail bogies or any other type of railway vehicles or in any type of Automobile vehicles or on any type of vehicles which are running on road / earth or any standard height and length vehicles or the hydraulic fluid which is being generated can be directly use to rotate the hydraulic motors to drive any type of railway engine/ railway bogies / railway wagons / metro rail / metro rail wagons / metro rail bogies or any other type of railway vehicles or any type of Automobile vehicles or on any type of vehicles which are running on road / earth or any standard height and length vehicles. After impacting of hydraulic fluid energy in hydraulic motor the residual hydraulic fluid energy will again be directed to go to the hydraulic power pack and from there it will again go back to the linear motion actuated Hydraulic pump mechanisms and again after the reciprocating action pumped hydraulic fluid will be generated which will be used for further application of generating electricity or fbV charging batteries or for directly use of rotating hydraulic motors or for any other application of use. The electricity generated by the above said procedure will be clean and environmentally friendly also.

No. of Pages : 11 No. of Claims : 13

(12) PATENT APPLICATION PUBLICATION
(19) INDIA
(22) Date of filing of Application :26/02/2008
(21) Application No.393/MUM/2008 A
(43) Publication Date : 14/03/2014

(54) Title of the invention : A NOVEL DEVICE FOR IN-SITU WELD REPAIR OF TUBE JOINT

(51) International classification	:B23K9/10, B23K9/04
(31) Priority Document No	:NA
(32) Priority Date	:NA
(33) Name of priority country	:NA
(86) International Application No	:NA
Filing Date	:NA
(87) International Publication No	: NA
(61) Patent of Addition to Application Number	:NA
Filing Date	:NA
(62) Divisional to Application Number	:NA
Filing Date	:NA

(71)**Name of Applicant :**
1)LERSEN & TOUBRO LIMITED
Address of Applicant :L&T HOUSE, BALLARD ESTATE, MUMBAI-400 038, Maharashtra India
(72)**Name of Inventor :**
1)GEORGE VARGHESE
2)BALACHANDRAN R

(57) Abstract :
Present invention a Novel Device for In-Situ Weld Repair of Tube Joint provides sets of suitable devices to carry out in-situ machining and weld deposition at a defect location that is difficult to access due to various reasons and also where the access area is prone to presence of hazardous radiations or chemicals etc. Wherein guide sleeve (6), outer pipe (5), flouro-plastic bearing pads (7), inner pipe (4), pointer(10) and drive motor (11) form common part for the both sets. Using said parts and additional parts such as Machining Head (1), a high speed Milling Motor, a Flexible Shaft (3) machining is carried out. For carrying out weld deposition Welding Head (12), Water-cooled TIG torch (13), with automatic wire feeding and arc voltage control, inclined Sliding Plate (14), Wire Feeder, electronic Control Panel (17) is used along with the mentioned common parts.

No. of Pages : 10 No. of Claims : 1

(12) PATENT APPLICATION PUBLICATION
(19) INDIA
(22) Date of filing of Application :24/02/2011
(21) Application No.514/MUM/2011 A
(43) Publication Date : 14/03/2014

(54) Title of the invention : ORDER MANAGEMENT FOR ASSET-BASED SERVICE INDUSTRIES

(51) International classification	:G07F7/00, G07G1/00, G06Q10/08
(31) Priority Document No	:NA
(32) Priority Date	:NA
(33) Name of priority country	:NA
(86) International Application No	:NA
Filing Date	:NA
(87) International Publication No	: NA
(61) Patent of Addition to Application Number	:NA
Filing Date	:NA
(62) Divisional to Application Number	:NA
Filing Date	:NA

(71)**Name of Applicant :**
1)TATA CONSULTANCY SERVICES LIMITED
Address of Applicant :NIRMAL BUILDING, 9TH FLOOR, NARIMAN POINT, MUMBAI-400021, Maharashtra India
(72)**Name of Inventor :**
1)SENGUPTA, SIDDHARTHA
2)SINHA, SANTANU
3)S. SANTHANAKRISHNAN
4)RAUT, SUMIT

(57) Abstract :
Systems and methods for order management for asset-based service industries are described. In one implementation, an order management system 102 includes an order promising module 114 to promise an order. The order promising module 114 comprises a priority allocation module 214 configured to assign a priority to the order, based on a plurality of order attributes including at least profitability of the order. The order promising module 114 further comprises a promise search module 216 configured to search in a plurality of dimensions for at least one asset to be allocated for fulfilling the order based on the priority of the order and a promise optimization module 222 configured to provide at least one alternative allocation information based on the search.

No. of Pages : 28 No. of Claims : 14

(12) PATENT APPLICATION PUBLICATION
(19) INDIA
(22) Date of filing of Application :26/09/2012
(21) Application No.2805/MUM/2012 A
(43) Publication Date : 14/03/2014

(54) Title of the invention : DATA TRANSMISSION METHODS

(51) International classification :H04L1/00
(31) Priority Document No :11/693, 752
(32) Priority Date :30/03/2007
(33) Name of priority country :U.S.A.
(86) International Application No :NA
Filing Date :NA
(87) International Publication No : NA
(61) Patent of Addition to Application Number :NA
Filing Date :NA
(62) Divisional to Application Number :634/MUM/2008
Filed on :25/03/2008

(71)**Name of Applicant :**
1)VIA TECHNOLOGIES, INC.
Address of Applicant :8F, 535, CHUNG-CHENG RD., HSIN-TIEN, TAIPEI, TAIWAN
(72)**Name of Inventor :**
1)DEJIAN LI
2)WENBIN LI

(57) Abstract :
Data transmission systems and methods. The data transmission system comprises a bus, a slave, a master, and a master interface. The master transmits a request comprising transfer information comprising a start address and a length. The master interface receives the request from the master. The master interface determines a burst type of a first burst according to the transfer information, and transmits the first burst with the burst type to the slave via the bus, where the first burst is aligned to at least one address boundary of the slave. The master interface receives data corresponding to the first burst from the slave, and transmits the data to the master.

No. of Pages : 21 No. of Claims : 9

(12) PATENT APPLICATION PUBLICATION
(19) INDIA
(22) Date of filing of Application :23/12/2010
(21) Application No.3511/MUM/2010 A
(43) Publication Date : 14/03/2014

(54) Title of the invention : IMPROVED AND HYGIENIC APPARATUS ENABLING EFFECTIVE ADHESION BETWEEN SUFFACES

(51) International classification	:B60J10/02, B65B7/12,
(31) Priority Document No	:NA
(32) Priority Date	:NA
(33) Name of priority country	:NA
(86) International Application No	:NA
Filing Date	:NA
(87) International Publication No	: NA
(61) Patent of Addition to Application Number	:NA
Filing Date	:NA
(62) Divisional to Application Number	:NA
Filing Date	:NA

(71)**Name of Applicant :**
1)PIDILITE INDUSTRIES LIMITED
Address of Applicant :RAMKRISHNA MANDIR ROAD, OFF SIR MATHURADAS VASANJI ROAD, ANDHERI (EAST) MUMBAI - 400 059, Maharashtra India
(72)**Name of Inventor :**
1)PAREKH MADHUKAR BALVANTRAY

(57) Abstract :
The invention provides an adhesion apparatus. Further, the invention provides an improved apparatus that enables effective adhesion between the material surfaces in a hygienic manner. The invention further provides an integrated adhesion and rolling apparatus that enables effective adhesion of material surfaces in a hygienic manner.

No. of Pages : 16 No. of Claims : 7

(12) PATENT APPLICATION PUBLICATION
(19) INDIA
(22) Date of filing of Application :24/02/2011
(21) Application No.512/MUM/2011 A
(43) Publication Date : 14/03/2014

(54) Title of the invention : DUAL CONVERSION ONLINE UPS

(51) International classification	:H02J7/02, H02J9/06, H02M1/10
(31) Priority Document No	:NA
(32) Priority Date	:NA
(33) Name of priority country	:NA
(86) International Application No	:NA
Filing Date	:NA
(87) International Publication No	: NA
(61) Patent of Addition to Application Number	:NA
Filing Date	:NA
(62) Divisional to Application Number	:NA
Filing Date	:NA

(71)**Name of Applicant :**
1)EMERSON NETWORK POWER (I) PVT. LTD.
Address of Applicant :PLOT NO.C-20, ROAD NO.19, WAGLE INDUSTRIAL ESTATE, THANE (W) - 400604, Maharashtra India
(72)**Name of Inventor :**
1)MEGHWANI ANJU

(57) Abstract :
An Uninterruptible Power Supply (UPS) and a method of interconnecting a plurality of supplies to a load are disclosed. The UPS interconnects a plurality of supplies comprising a mains AC supply, a bypass AC supply and a battery bank at its input and supply uninterrupted power to a load at its output in one of at least a mains mode of operation, a battery mode of operation and a bypass mode of operation. The UPS includes an output transformer connected to an inverter and a bypass power supply element. The bypass power supply element facilitates the bypass mode of operation. The bypass mode of operation is activated when operation of the inverter becomes faulty. In the bypass mode of operation the bypass power supply element provides power to the output transformer.

No. of Pages : 36 No. of Claims : 15

(12) PATENT APPLICATION PUBLICATION
(19) INDIA
(22) Date of filing of Application :02/03/2011
(21) Application No.587/MUM/2011 A
(43) Publication Date : 14/03/2014

(54) Title of the invention : MODULAR MECHANICAL ENGAGEMENT FOR INSULATED DRIVE SHAFT

(51) International classification	:H01H 1/12, H02H 3/00	(71)**Name of Applicant :** **1)LARSEN & TOUBRO LIMITED** Address of Applicant :L & T House Ballard Estate Mumbai 400 001 State of Maharashtra India
(31) Priority Document No	:NA	(72)**Name of Inventor :**
(32) Priority Date	:NA	**1)VPB Chakravarthi Kajana**
(33) Name of priority country	:NA	**2)BHUVANESWARI M**
(86) International Application No	:NA	
Filing Date	:NA	
(87) International Publication No	: NA	
(61) Patent of Addition to Application Number	:NA	
Filing Date	:NA	
(62) Divisional to Application Number	:NA	
Filing Date	:NA	

(57) Abstract :
The present invention relates to an improved drive shaft arrangement in a circuit breaker, said arrangement comprising plurality of identical drive shaft assembly .Each assembly comprising a pair of drive shaft means(4); moving contact assembly operatively placed in-between said pair of drive shaft means(4); pair of wall means(6,7) securing said drive shaft means(4). The walls comprising an outer wall (6) and an inner wall(7) comprising plurality of projections(10) substantially located on the outer wall(6); plural cavities(11) substantially located on the outer wall(6) adapted to get engaged with said plurality of projection(10) and plurality of mechanism (12,13) cavity substantially located on the outer wall (6) adapted for mechanism link connection. The improved drive shaft arrangement is defined by engaging each drive shaft assembly with one another in a unique mechanical arrangement adapted to connect and /or disconnect the current flow in circuit breaker.

No. of Pages : 25 No. of Claims : 35

(12) PATENT APPLICATION PUBLICATION
(19) INDIA
(22) Date of filing of Application :23/08/2012
(21) Application No.2451/MUM/2012 A
(43) Publication Date : 14/03/2014

(54) Title of the invention : HIGH DIFFUSION AEROFOILS

(51) International classification	:F01D9/02, F01D 5/18
(31) Priority Document No	:NA
(32) Priority Date	:NA
(33) Name of priority country	:NA
(86) International Application No	:NA
Filing Date	:NA
(87) International Publication No	: NA
(61) Patent of Addition to Application Number	:NA
Filing Date	:NA
(62) Divisional to Application Number	:NA
Filing Date	:NA

(71)**Name of Applicant :**
1)INDIAN INSTITUTE OF TECHNOLOGY, BOMBAY
Address of Applicant :INDIAN INSTITUTE OF TECHNOLOGY BOMBAY, POWAI MUMBAI - 400 076 Maharashtra India
(72)**Name of Inventor :**
1)BHASKAR ROY
2)A.M PRADEEP

(57) Abstract :
The present invention proposes high diffusion aerofoils, capable of high diffusion over the blade surface, without any flow separation over the entire axial fan blade surfaces. These aerofoils are vital in creation of high diffusion blade members for the flow of air/ gas using axial fans. High diffusion axial fans are capable of delivering air/ gas at higher delivery pressure. This enables the axial fan with high diffusion aerofoils along its radial length to deliver high air/ gas flow in a high resistance scenario, running at lower speeds, low noise operations and consuming less power. The proposed aerofoils can produce delivery pressure of approximately 1200 Pa to 1300 Pa and the overall pressure ratio could be in range of 1.02 to 1.03. The compressors/fans with the proposed aerofoil design can produce efficiencies above 85 %.

No. of Pages : 19 No. of Claims : 24

(12) PATENT APPLICATION PUBLICATION
(19) INDIA
(22) Date of filing of Application :01/09/2012
(21) Application No.2549/MUM/2012 A
(43) Publication Date : 14/03/2014

(54) Title of the invention : DESIGN DEVELOPMENT AND EVALUATION OF FLOATING DRUG DELIVERY SYSTEM OF FAMOTIDINE

(51) International classification	:A61K 31/426; A61K 9/00
(31) Priority Document No	:NA
(32) Priority Date	:NA
(33) Name of priority country	:NA
(86) International Application No	:NA
Filing Date	:NA
(87) International Publication No	: NA
(61) Patent of Addition to Application Number	:NA
Filing Date	:NA
(62) Divisional to Application Number	:NA
Filing Date	:NA

(71)**Name of Applicant :**
1)BHARATI VASANTRAO BAKDE
Address of Applicant :C/O Anil S. Hedau S1/ Block A Rajarani Appartment Ranapratap Nagar Near Ranapratap Gate Arni Road Yavatmal- 445001. Maharashtra India
(72)**Name of Inventor :**
1)BHARATI VASANTRAO BAKDE
2)ANIL VISHWANATH CHANDEWAR
3)Mr. Anil Shamrao Hedau

(57) Abstract :
Famotidine gastroretentive (GR) controlled release system was formulated to increase gastric residence time leading to improved drug bioavailability. Novel combinations of Xanthan Gum Guar Gum Carbopol 940P Ethyl Cellulose Rosin Sodium Alginate Kollidon SR and Psyllium Husk etc and gas forming agent like NaHCO3were selected for the present study. Floating lag time (FLT) and regression coefficient as dependent variables revealed that the amount of Xanthan Gum Guar Gum Carbopol 940P Ethyl Cellulose Rosin Sodium Alginate Kollidon SR and Psyllium Husk etc and gas forming agent like NaHCO3 have a significant effect ($p < 0.05$) on famotidine release and FLT. Floating Matrix Tablets were prepared and evaluated for mass thickness diameter weight variation hardness friability drug content and floating properties like floating lag time and floating duration. Tablets were studied fordissolution for 12 h and exhibited controlled release of Famotidine with floating for 12 h.

No. of Pages : 29 No. of Claims : 7

(12) PATENT APPLICATION PUBLICATION
(19) INDIA
(22) Date of filing of Application :12/09/2012
(21) Application No.2654/MUM/2012 A
(43) Publication Date : 14/03/2014

(54) Title of the invention : GLOBALLY OPTIMUM TRADING POSITIONS IN RISK-NEUTRAL MEASURE

(51) International classification	:G06Q40/00, G06F 7/544
(31) Priority Document No	:NA
(32) Priority Date	:NA
(33) Name of priority country	:NA
(86) International Application No	:NA
Filing Date	:NA
(87) International Publication No	: NA
(61) Patent of Addition to Application Number	:NA
Filing Date	:NA
(62) Divisional to Application Number	:NA
Filing Date	:NA

(71)**Name of Applicant :**
1)TATA CONSULTANCY SERVICES LIMITED
Address of Applicant :Nirmal Building 9th Floor Nariman Point Mumbai 400021 Maharashtra India
(72)**Name of Inventor :**
1)CHELLABOINA Vijaysekhar
2)SUBRAMANIAN Easwara Naga
3)JAIN Arihant
4)BHAT Sanjay Purushottam

(57) Abstract :
A trading position evaluation system (102) for evaluating trading positions that are globally optimum in a risk-neutral measure includes an option price determination module (216) configured to determine a current option price and a shifted option price of an underlying asset of a European Contingent Claim (ECC) at a trading time instance amongst a plurality of trading time instances obtained from a trader based on ECC data (110) and market data (114). The ECC data (110) comprises data associated with the ECC and the underlying asset of the ECC and the market data (114) comprises annualized volatility of the underlying asset and risk-free interest rate of market. Based on the current option price and the shifted option price a position evaluation module (116) evaluates a trading position at the trading time instance that minimizes global variance of profit and loss to the trader.

No. of Pages : 27 No. of Claims : 11

(12) PATENT APPLICATION PUBLICATION
(19) INDIA
(22) Date of filing of Application :04/03/2011
(21) Application No.622/MUM/2011 A
(43) Publication Date : 14/03/2014

(54) Title of the invention : AN IMPROVED SHADING RING ARRANGEMENT FOR ELECTROMAGNET

(51) International classification	:H01F7/12, H01F7/06
(31) Priority Document No	:NA
(32) Priority Date	:NA
(33) Name of priority country	:NA
(86) International Application No	:NA
Filing Date	:NA
(87) International Publication No	: NA
(61) Patent of Addition to Application Number	:NA
Filing Date	:NA
(62) Divisional to Application Number	:NA
Filing Date	:NA

(71)**Name of Applicant :**
1)LARSEN & TOUBRO LIMITED
Address of Applicant :L & T House Ballard Estate Mumbai 400 001 State of Maharashtra India
(72)**Name of Inventor :**
1)SAVALIYA Swati;

(57) Abstract :
The present invention relates to an improved an improved shading ring arrangement for electromagnet. The arrangement comprises a fixed magnet means (2), a moving magnet means (1), plurality of restrain plate means (6), and plurality of pole means . The poles comprising a center pole means (5) and extreme pole means (3,4) in which each pole means comprising plurality of shading ring means such that total flux produced by all the shade rings of all the poles provide high breaking velocity to minimize losses to said contact means. The center pole means (5) being attachable and/or detachably arranged on the fixed magnet means (2) by means of the plurality of restrain plate means (6) so as to prevent residual magnetism in the fixed magnet means (2).

No. of Pages : 15 No. of Claims : 5

(12) PATENT APPLICATION PUBLICATION
(19) INDIA
(22) Date of filing of Application :13/08/2012
(21) Application No.2299/MUM/2012 A
(43) Publication Date : 14/03/2014

(54) Title of the invention : BERRY FRUIT SHELL AS A MEDIUM IN DUAL MEDIA WATER PURIFICATION FILTER.

(51) International classification :A61K36/725
(31) Priority Document No :NA
(32) Priority Date :NA
(33) Name of priority country :NA
(86) International Application No :NA
Filing Date :NA
(87) International Publication No :N/A
(61) Patent of Addition to Application Number :NA
Filing Date :NA
(62) Divisional to Application Number :NA
Filing Date :NA

(71)**Name of Applicant :**
1)BHOLE ANAND GOVIND
Address of Applicant :'YASH ENCLAVE;259, DHARAMPETH EXT., NAGPUR-440010 Maharashtra India
(72)**Name of Inventor :**
1)BHOLE, A. G.

(57) Abstract :
In the field of water purification, rapid gravity sand filters are most commonly used to remove the impurities present in water. Sand media is used in these filters. Dual media filter is the modification of the rapid gravity sand filter where anthracite is universally used as a medium alongwith sand. Dual media filter permits higher rate of filtration compared to that in rapid gravity sand filter. But anthracite of required quality is not available in required quantity in India. Hence in the present invention berry fruit crushed shell is used as a substitute for anthracite since the characteristics of anthracite very well match with that of crushed berry shell. Crushed berry shell is amply available in large quantities at low cost in India. The shell does not decompose although it remains in contact with water for a long time , it also does not add its taste, odour or colour to water. Its specific gravity is 1.4. It is a quite hard material having minimum wear and tear when used as a filtering media. Hence berry fruit crushed shell as a substitute for anthracite to be used along with sand in the dual media, has been claimed in this invention..

No. of Pages : 17 No. of Claims : 2

(12) PATENT APPLICATION PUBLICATION
(19) INDIA
(22) Date of filing of Application :24/02/2011
(21) Application No.506/MUM/2011 A
(43) Publication Date : 14/03/2014

(54) Title of the invention : IMPROVED PROCESS FOR THE PREPARATION OF MICROPARTICLES

(51) International classification	:A61K 9/14, B01J 2/00
(31) Priority Document No	:NA
(32) Priority Date	:NA
(33) Name of priority country	:NA
(86) International Application No	:NA
Filing Date	:NA
(87) International Publication No	: NA
(61) Patent of Addition to Application Number	:NA
Filing Date	:NA
(62) Divisional to Application Number	:NA
Filing Date	:NA

(71)**Name of Applicant :**
1)TORRENT PHARMACEUTICALS LTD.
Address of Applicant :TORRENT HOUSE, OFF ASHRAM ROAD, NEAR DINESH HALL, AHMEDABAD 380 009, Gujarat India
(72)**Name of Inventor :**
1)SUNIL NADKARNI
2)JAYA ABRAHAM
3)AMIT KUMAR KESARWANI
4)KAPIL KHATRI

(57) Abstract :
This invention relates to an improved process for the preparation of microparticles of nucleophilic compounds. The process is free from the use of benzyl alcohol as a solvent, which eliminates the need of intermediate drying and eventually reduce the residual solvent. The process also describes the use of aprotic solvent, which allows the molecular weight of polymer to remain significantly unchanged during the process, independent of hold time and hold temperature.

No. of Pages : 19 No. of Claims : 9

(12) PATENT APPLICATION PUBLICATION
(19) INDIA
(22) Date of filing of Application :03/01/2011
(21) Application No.6/MUM/2011 A
(43) Publication Date : 14/03/2014

(54) Title of the invention : FLOATING DRUG DELIVERY SYSTEM

(51) International classification	:A61K9/00, A61K 31/715	
(31) Priority Document No	:NA	
(32) Priority Date	:NA	
(33) Name of priority country	:NA	
(86) International Application No	:NA	
Filing Date	:NA	
(87) International Publication No	:N/A	
(61) Patent of Addition to Application Number	:NA	
Filing Date	:NA	
(62) Divisional to Application Number	:NA	
Filing Date	:NA	

(71)**Name of Applicant :**
1)PIYUSH UTTAMCHAND MANDLECHA
Address of Applicant :5 ULHAS, BHAVANI NAGAR, AHMEDNAGAR-414001 Maharashtra India
2)OM PRAKAS BALIAR SINGH
3)SURENDRA GANESHLAL GATTANI
(72)**Name of Inventor :**
1)PIYUSH UTTAMCHAND MANDECHA
2)OM PRAKAS BALIAR SINGH
3)SURENDRA GANESHLAL GATTANI

(57) Abstract :
The present invention relates to a composition for a floating drug delivery system comprising of a novel and natural low density high porous polysaccharide based materials(poIymer) and an active drug . The novel polymer ie Sugar cane Bagasse (SBG after processing \vas evaluated for different physicochemical properties .Successful floating drug delivery system using SBG was developed having Repaglinide and Atenolol as model drugs. From the porosity & density measurement study by helium pycnometer it was concluded that the SBG polymer has highly porous and low density in nature. FTIR spectrum and DSC thermogram studies confirmed the absence of drug-polymer interaction. The optimum concentration of SBG as low density floating material was found to be 60 % to 70 % .

No. of Pages : 35 No. of Claims : 16

(12) PATENT APPLICATION PUBLICATION
(19) INDIA
(22) Date of filing of Application :18/03/2011
(21) Application No.764/MUM/2011 A
(43) Publication Date : 14/03/2014

(54) Title of the invention : AN IMPOROVED PLUG-IN MODULE FOR MOULDED CASE CIRCUIT BREAKER

(51) International classification	:H01H71/02, H01H73/04
(31) Priority Document No	:NA
(32) Priority Date	:NA
(33) Name of priority country	:NA
(86) International Application No	:NA
Filing Date	:NA
(87) International Publication No	: NA
(61) Patent of Addition to Application Number	:NA
Filing Date	:NA
(62) Divisional to Application Number	:NA
Filing Date	:NA

(71)**Name of Applicant :**
1)LARSEN & TOUBRO LIMITED
Address of Applicant :L & T House Ballard Estate Mumbai 400 001 State of Maharashtra India
(72)**Name of Inventor :**
1)Vipin Cholayil Mohandas

(57) Abstract :
This invention relates generally to a circuit breaker and more particularly to an improved plug in module/mechanism for a moulded case circuit breaker for electrically connecting to a control panel. The mechanism comprises a plug in base (3) to reduce downtime in replacing a breaker; a rail (13) arrangement placed inside said plug in base (3) actuated by a lever (10), said lever (10) on being pulled withdrawing said breaker from said plug in base (3); a handle (9) and lever (10) arrangement placed at side of said plug in base (3) to facilitate plug out operation; a safety trip mechanism (7) tripping said breaker during plug in and plug out operation mounted on rear side of said breaker; a plurality of springs to generate contact pressure; a back plate (5)having duality of bends etc.

No. of Pages : 23 No. of Claims : 10

(12) PATENT APPLICATION PUBLICATION
(19) INDIA
(22) Date of filing of Application :11/01/2013

(21) Application No.103/MUMNP/2013 A
(43) Publication Date : 14/03/2014

(54) Title of the invention : NEW DRUG COMBINATIONS FOR THE TREATMENT OF MALARIA

(51) International classification :A61K31/496,A61K31/664,A61P33/00
(31) Priority Document No :10168641.8
(32) Priority Date :06/07/2010
(33) Name of priority country :EPO
(86) International Application No :PCT/EP2011/061447
Filing Date :06/07/2011
(87) International Publication No :WO 2012/004324
(61) Patent of Addition to Application Number :NA
Filing Date :NA
(62) Divisional to Application Number :NA
Filing Date :NA

(71)**Name of Applicant :**
1)BIOAGENCY AG
Address of Applicant :Schnackenburgallee 116A 22525 Hamburg GERMANY
(72)**Name of Inventor :**
1)HUTCHINSON David
2)GUTTERIDGE Winston

(57) Abstract :
The present invention relates to pharmaceutical preparations/compositions comprising 3-N-formyl hydroxy amino propyl phosphonic acid derivatives or 3-N-acetyl hydroxy amino propyl phosphonic acid derivatives as active ingredients in combination with Piperaquine.

No. of Pages : 21 No. of Claims : 14

(12) PATENT APPLICATION PUBLICATION
(19) INDIA
(22) Date of filing of Application :12/01/2013
(21) Application No.115/MUMNP/2013 A
(43) Publication Date : 14/03/2014

(54) Title of the invention : ABSORPTION MEDIA FOR SCRUBBING CO2 FROM A GAS STREAM AND METHODS USING THE SAME

(51) International classification :B01D53/14
(31) Priority Document No :61/365918
(32) Priority Date :20/07/2010
(33) Name of priority country :U.S.A.
(86) International Application No :PCT/US2011/038493
Filing Date :31/05/2011
(87) International Publication No :WO 2012/012027
(61) Patent of Addition to Application Number :NA
Filing Date :NA
(62) Divisional to Application Number :NA
Filing Date :NA

(71)**Name of Applicant :**
1)POWERSPAN CORP.
Address of Applicant :1 New Hampshire Avenue,Suite 125,Portsmouth,NH 03801,UNITED STATES OF AMERICA
(72)**Name of Inventor :**
1)ALIX Francis R.
2)DUNCAN Joanna
3)MCLARNON Christopher
4)AMOS Wade

(57) Abstract :
Absorption media for separating acidic gases such as C02 from a gas stream are disclosed. In some embodiments, the Absorption media include a solution of water, at least piperazine or a derivative of piperazine, and at least one alkali ion. The at least one alkali ion may be potassium. Methods and apparatus for separating acidic gases from a gas stream using such absorption media are also disclosed.

No. of Pages : 50 No. of Claims : 48

(12) PATENT APPLICATION PUBLICATION
(19) INDIA
(22) Date of filing of Application :10/09/2012
(21) Application No.2605/MUM/2012 A
(43) Publication Date : 14/03/2014

(54) Title of the invention : SOLID STATE DEVICE ASSEMBLY FOR ARC LESS SWITCHING OF ELECTRICAL CIRCUIT

(51) International classification	:H01H9/30, H01H9/54
(31) Priority Document No	:NA
(32) Priority Date	:NA
(33) Name of priority country	:NA
(86) International Application No	:NA
Filing Date	:NA
(87) International Publication No	: NA
(61) Patent of Addition to Application Number	:NA
Filing Date	:NA
(62) Divisional to Application Number	:NA
Filing Date	:NA

(71)**Name of Applicant :**
1)LARSEN & TOUBRO LIMITED
Address of Applicant :LARSEN & TOUBRO LIMITED ELECTRICAL & AUTOMATION NORTH WING, GATE 7, LEVEL 0, POWAI CAMPUS, SAKI VIHAR ROAD, MUMBAI 400 072, Maharashtra India
(72)**Name of Inventor :**
1)RAJESH KUMAR PANDA
2)JITENDAR VEERAMALLA

(57) Abstract :
The present invention provides a solid state device assembly including a solid state device connected in parallel connection with an electromechanical switch. The solid state device of the present invention facilitates arc less making and breaking of the electrical circuit under versatile load conditions up to 240V, 100A, 50Hz without the need of using bulkier heat sink. The solid state device includes a silicon controlled rectifier module that is suitable for both AC and DC and incorporates a micro controller which is powered up using a constant voltage source. The micro-controller is configured to delay the operation of the silicon controlled rectifier module and the mechanical switch to prevent arc while making and breaking of the electrical circuit.

No. of Pages : 19 No. of Claims : 3

(12) PATENT APPLICATION PUBLICATION
(19) INDIA
(22) Date of filing of Application :18/09/2012
(21) Application No.2723/MUM/2012 A
(43) Publication Date : 14/03/2014

(54) Title of the invention : AGENT MATCHING BASED ON VIDEO ANALYSIS OF CUSTOMER PRESENTATION

(51) International classification :G06F3/00
(31) Priority Document No :13/447/943
(32) Priority Date :16/04/2012
(33) Name of priority country :U.S.A.
(86) International Application No :NA
Filing Date :NA
(87) International Publication No :N/A
(61) Patent of Addition to Application Number :NA
Filing Date :NA
(62) Divisional to Application Number :NA
Filing Date :NA

(71)**Name of Applicant :**
1)AVAYA INC
Address of Applicant :211, MOUNT AIRY ROAD BASKING RIDGE NEW JERSEY 07920, UNITED STATES OF AMERICA
(72)**Name of Inventor :**
1)FAGUNDES, LUCIANO GODOY
2)MORAN, THOMAS
3)DESAI, DHAVAL
4)KOHLER, JOYLEE E.
5)MICHAELIS, PAUL ROLLER

(57) Abstract :
Systems and methods for routing and/or servicing contacts using video analysis of one or more video streams are provided. The systems and methods are particularly applicable to a contact center.

No. of Pages : 30 No. of Claims : 10

(12) PATENT APPLICATION PUBLICATION
(19) INDIA
(22) Date of filing of Application :17/03/2011
(21) Application No.757/MUM/2011 A
(43) Publication Date : 14/03/2014

(54) Title of the invention : PROCESS FOR THE PREPARATION OF RIVAROXABAN AND INTERMEDIATES THHEREOF

(51) International classification :A61K31/5375,A61K31/42
(31) Priority Document No :NA
(32) Priority Date :NA
(33) Name of priority country :NA
(86) International Application No :NA
Filing Date :NA
(87) International Publication No : NA
(61) Patent of Addition to Application Number :NA
Filing Date :NA
(62) Divisional to Application Number :NA
Filing Date :NA

(71)**Name of Applicant :**
1)TORRENT PHARMACEUTICALS LTD.
Address of Applicant :TORRENT HOUSE, OFF ASHRAM ROAD, NEAR DINESH HALL, AHMEDABAD 380 009, Gujarat India
(72)**Name of Inventor :**
1)SUNIL SADANAND NADKARNI
2)ARUNKUMAR GUPTA
3)MANOJ DEVILALJI PRABHAVAT
4)SRINIVAS GOUD

(57) Abstract :
The present invention relates to a novel process for the preparation of Rivaroxaban of formula (I) and its pharmaceutically acceptable salts. The present invention also relates to novel intermediates, 5-(azidomethyl)-3-[4-(3-oxotetrahydro-2H-pyran-4-yl)phenyl]-1,3-oxazolidin-2-one of formula (VI) and its enantiomeric form, 5-chlorothiophene-2-carbothioic-S-acid of formula (VII), process for its preparation and use thereof for the preparation of Rivaroxaban of formula (I) and its pharmaceutically acceptable salts and pharmaceutical composition comprising the same.

No. of Pages : 29 No. of Claims : 10

(12) PATENT APPLICATION PUBLICATION
(19) INDIA
(22) Date of filing of Application :11/01/2008
(21) Application No.86/MUM/2008 A
(43) Publication Date : 14/03/2014

(54) Title of the invention : A NOVEL SURVEILLANCE EQUIPMENT DEPLOYMENT SYSTEM AND A METHOD TO OPERATE THE SAME

(51) International classification	:B60R1/00, B62D41/00
(31) Priority Document No	:NA
(32) Priority Date	:NA
(33) Name of priority country	:NA
(86) International Application No	:NA
Filing Date	:NA
(87) International Publication No	: NA
(61) Patent of Addition to Application Number	:NA
Filing Date	:NA
(62) Divisional to Application Number	:NA
Filing Date	:NA

(71)**Name of Applicant :**
1)LARSON AND TOUBRO LIMITED
Address of Applicant :L & T HOUSE, BALLARD ESTATE, MUMBAI-400 001, Maharashtra India
(72)**Name of Inventor :**
1)NAGABHUSHAN VIVEK
2)RAMCHANDANI ARUN TARO

(57) Abstract :
The invention of the present application relates to a surveillance vehicle that operates by deploying retractable surveillance equipment such as a camera through a hatch located in the vehicles roof. The operation of deployment and retraction of the surveillance equipment is automated with the help of a mechanical arrangement comprising an optional driving motor, masts, cranks, levers, springs and a special gearbox that selectively transfer the power to mast and the hatch to facilitate the deployment of the surveillance equipment and retraction thereof in a predetermined sequence.

No. of Pages : 21 No. of Claims : 8

(12) PATENT APPLICATION PUBLICATION
(19) INDIA
(22) Date of filing of Application :27/09/2012
(21) Application No.2827/MUM/2012 A
(43) Publication Date : 14/03/2014

(54) Title of the invention : MULTI-TASKING RELIEF

(51) International classification :B63G8/00
(31) Priority Document No :13/449, 955
(32) Priority Date :18/04/2012
(33) Name of priority country :U.S.A.
(86) International Application No :NA
Filing Date :NA
(87) International Publication No :N/A
(61) Patent of Addition to Application Number :NA
Filing Date :NA
(62) Divisional to Application Number :NA
Filing Date :NA

(71)**Name of Applicant :**
1)AVAYA INC
Address of Applicant :211, MOUNT AIRY ROAD BASKING RIDGE NEW JERSEY 07920 U.S.A.
(72)**Name of Inventor :**
1)ANDREW D. FLOCKHART
2)JOYLEE KOHLER
3)ROBERT C. STEINER

(57) Abstract :
A contact center is described along with various methods and mechanisms for administering the same. The contact center proposed herein provides the ability to, among other things, determine performance efficiencies/metric associated with one or more multi-tasking agents and provide relief to agents based on rules. This multitasking relief may be provided to the one or more agents via reducing an amount of multi-tasking work, inserting breaks into the agents work flow, and/or directing work items to other resources.

No. of Pages : 33 No. of Claims : 10

(12) PATENT APPLICATION PUBLICATION
(19) INDIA
(22) Date of filing of Application :27/09/2012
(21) Application No.2828/MUM/2012 A
(43) Publication Date : 14/03/2014

(54) Title of the invention : ADAPTIVE ESTIMATED WAIT TIME PREDICTOR

(51) International classification :H03D3/24
(31) Priority Document No :13/407, 536
(32) Priority Date :28/02/2012
(33) Name of priority country :U.S.A.
(86) International Application No :NA
Filing Date :NA
(87) International Publication No :N/A
(61) Patent of Addition to Application Number :NA
Filing Date :NA
(62) Divisional to Application Number :NA
Filing Date :NA

(71)**Name of Applicant :**
1)AVAYA INC
Address of Applicant :211, MOUNT AIRY ROAD BASKING RIDGE NEW JERSEY 07920 U.S.A.
(72)**Name of Inventor :**
1)JOYLEE KOHLER
2)ANDREW D. FLOCKHART
3)ROBERT C. STEINER
4)WILLIAM H.JOLICOEUR

(57) Abstract :
Systems and methods for providing adaptive estimated wait time predictions for work items are provided. More particularly, a processor-enabled module may select a best estimated wait time algorithm from among a plurality of estimated wait time algorithms that meets the accuracy and calculation resource conditions of a contact center based on rules. Furthermore, the conditions of a contact center may change at times and as a result the selection of which estimated wait time algorithm is considered best will adapt to suit the contact center change. In addition, the selected best estimated wait time prediction can be provided to client communication devices.

No. of Pages : 32 No. of Claims : 10

(12) PATENT APPLICATION PUBLICATION
(19) INDIA
(22) Date of filing of Application :06/01/2012
(21) Application No.52/MUM/2012 A
(43) Publication Date : 14/03/2014

(54) Title of the invention : AUTOMOBILE ASSISTANCE SYSTEM FOR OBJECT DETECTION AND TRACKING

(51) International classification	:B60Q 1/14
(31) Priority Document No	:NA
(32) Priority Date	:NA
(33) Name of priority country	:NA
(86) International Application No	:NA
Filing Date	:NA
(87) International Publication No	:N/A
(61) Patent of Addition to Application Number	:NA
Filing Date	:NA
(62) Divisional to Application Number	:NA
Filing Date	:NA

(71)**Name of Applicant :**
1)TATA CONSULTANCY SERVICES LIMITED
Address of Applicant :NIRMAL BUILDING, 9TH FLOOR, NARIMAN POINT, MUMBAI 400021, Maharashtra India
(72)**Name of Inventor :**
1)MANOJ C R
2)SIVA SRINIVASA MURTHY NAGAVAJYULA
3)JESWIN WILSON
4)KRANTHI KUMAR PALAVALASA

(57) Abstract :
A system and method for detecting and tracking one or more object in front of a host automobile, the system comprises of an image capturing device for capturing images in plurality of frames. A processor configured for processing the detected image and includes a detector for applying one or more object detection techniques for obtaining a template. The processor further includes an evaluation module to generate a dynamic threshold matching score for region of interest and fixed matching score value for surrounding region. The evaluation value further updates the stored template after a fixed interval of frames and also determines an offset value for modifying the matching score obtained after performing the template matching in order to reduce the false detections. The tracking module performs a repetitive tracking of detected object based on the template matching and modified matching score.

No. of Pages : 18 No. of Claims : 15

(12) PATENT APPLICATION PUBLICATION
(19) INDIA
(22) Date of filing of Application :11/01/2013
(21) Application No.108/MUMNP/2013 A
(43) Publication Date : 14/03/2014

(54) Title of the invention : PATCH FOR TREATING AND ALLEVIATING SYMPTOMS OF SKIN DISEASES ACCOMPANIED BY EFFUSION OF BLOOD PROTEINS

(51) International classification	:A61K9/70,A61K31/545,A61P17/00
(31) Priority Document No	:1020100066981
(32) Priority Date	:12/07/2010
(33) Name of priority country	:Republic of Korea
(86) International Application No	:PCT/KR2011/005061
Filing Date	:11/07/2011
(87) International Publication No	:WO 2012/008718
(61) Patent of Addition to Application Number	:NA
Filing Date	:NA
(62) Divisional to Application Number	:NA
Filing Date	:NA

(71)**Name of Applicant :**
1)BIOPID CORPORATION
Address of Applicant :343 1 Sancheon ri Sinbuk eup Chuncheon si Gangwon do 200 822 Republic of Korea
(72)**Name of Inventor :**
1)CHOI Seong Hyun

(57) Abstract :
The present invention relates to a patch for treating and alleviating the symptoms of skin diseases which are accompanied by the effusion of blood proteins or to a patch for the adsorption of the blood proteins that effuse from the skin.

No. of Pages : 58 No. of Claims : 15

(12) PATENT APPLICATION PUBLICATION
(19) INDIA
(22) Date of filing of Application :18/03/2011
(21) Application No.780/MUM/2011 A
(43) Publication Date : 14/03/2014

(54) Title of the invention : METHOD AND SYSTEM FOR SPLITTING DRIVE RATIO IN A HYBRID TRANSMISSION

(51) International classification	:F16H37/06 , B60W20/00
(31) Priority Document No	:NA
(32) Priority Date	:NA
(33) Name of priority country	:NA
(86) International Application No	:NA
Filing Date	:NA
(87) International Publication No	: NA
(61) Patent of Addition to Application Number	:NA
Filing Date	:NA
(62) Divisional to Application Number	:NA
Filing Date	:NA

(71)**Name of Applicant :**
1)TATA MOTORS LIMITED
Address of Applicant :BOMBAY HOUSE, 24 HOMI MODY STREET, MUMBAI-400001, Maharashtra India
(72)**Name of Inventor :**
1)JANARDHANAN VENKATAPATHI

(57) Abstract :
An automated manual / automatic transmission with at least one planetary system, at least one electric motor/generator and at least one lock up clutch is described. The engine is operated in an efficient region by the assistance of planetary system and motor generator.

No. of Pages : 14 No. of Claims : 6

(12) PATENT APPLICATION PUBLICATION
(19) INDIA
(22) Date of filing of Application :12/01/2011
(21) Application No.99/MUM/2011 A
(43) Publication Date : 14/03/2014

(54) Title of the invention : NON OBSTRUCTIVE PARTICLE DAMPING FOR HOLLOW STRUCTURE IN A VEHICLE

(51) International classification	:B62D21/09, B62D37/02
(31) Priority Document No	:NA
(32) Priority Date	:NA
(33) Name of priority country	:NA
(86) International Application No	:NA
Filing Date	:NA
(87) International Publication No	: NA
(61) Patent of Addition to Application Number	:NA
Filing Date	:NA
(62) Divisional to Application Number	:NA
Filing Date	:NA

(71)**Name of Applicant :**
1)TATA MOTORS LIMITED
Address of Applicant :BOMBAY HOUSE, 24 HOMI MODY STREET, MUMBAI-400001, Maharashtra India
(72)**Name of Inventor :**
1)PRASANTH B
2)SACHIN WAGH
3)GANESH IYER

(57) Abstract :
The invention here is the use of particle damping to improve the structural characteristics of a cradle used in a passenger car. The cradle here mounts the engine, gearbox and the suspension systems. The cradle is made of four tubes welded to each other. To improve the damping characteristics of the cradle, particle damping was applied on all the cradle members. The damping properties of the structure have improved by more than 50% with this method. The frequency analysis and modal data has also shown a quantum improvement through out the frequency range especially in the frequencies above 200 Hz. This is a cost effective solution which can be implemented directly into production with no additional cost of tooling and materials.

No. of Pages : 15 No. of Claims : 12

(12) PATENT APPLICATION PUBLICATION
(19) INDIA
(22) Date of filing of Application :18/03/2011
(21) Application No.765/MUM/2011 A
(43) Publication Date : 14/03/2014

(54) Title of the invention : MULTI POINT ACTUATING KNOB

(51) International classification	:A61B17/00, A61B17/29
(31) Priority Document No	:NA
(32) Priority Date	:NA
(33) Name of priority country	:NA
(86) International Application No	:NA
Filing Date	:NA
(87) International Publication No	: NA
(61) Patent of Addition to Application Number	:NA
Filing Date	:NA
(62) Divisional to Application Number	:NA
Filing Date	:NA

(71)**Name of Applicant :**
1)LARSEN & TOUBRO LIMITED
Address of Applicant :L & T House Ballard Estate Mumbai 400 001 State of Maharashtra India
(72)**Name of Inventor :**
1)KHEDEKAR Abhishek G
2)NATH Subhasish
3)BHARAMBE Bhagawat S

(57) Abstract :
The present invention relates to a multi-point actuation assembly for use in switchgears for actuation of multiple contacts. The assembly comprises a housing (6), a guiding means (5) mounted on the housing, plural plug means (3, 4) engaged with actuating means (1, 2) located on the housing whereby said plurality of plug means are movable corresponding to the pressing of said actuating means.

No. of Pages : 11 No. of Claims : 7

(12) PATENT APPLICATION PUBLICATION
(19) INDIA
(22) Date of filing of Application :10/01/2012
(21) Application No.89/MUM/2012 A
(43) Publication Date : 14/03/2014

(54) Title of the invention : TAPENTADOL AND INTERMEDIATES THEREOF

(51) International classification	:C07C 209/36
(31) Priority Document No	:NA
(32) Priority Date	:NA
(33) Name of priority country	:NA
(86) International Application No	:NA
Filing Date	:NA
(87) International Publication No	:N/A
(61) Patent of Addition to Application Number	:NA
Filing Date	:NA
(62) Divisional to Application Number	:NA
Filing Date	:NA

(71)**Name of Applicant :**
1)CADILA HEALTHCARE LIMITED
Address of Applicant :CADILA HEALTHCARE LTD; PLOT NO.26-29 & 31, DABHASA-UMARAYA ROAD, VILL. DABHASA 391440 TAL :PADRA. DIST: VADODARA, Gujarat India
(72)**Name of Inventor :**
1)DWIVEDI SHRIPRAKASH DHAR
2)PATEL DHIMANT JASUBHAI
3)SHAH ALPESH PRAVINCHANDRA

(57) Abstract :
The invention relates to process for preparation of tapentadol and intermediates thereof. In particular, the invention provides the process for the preparation of novel intermediates of tapentadol and their use for the preparation of tapentadol. Particularly, the present invention also provides processes for the preparation of pharmaceutically acceptable acid additions salts of tapentadol.

No. of Pages : 27 No. of Claims : 10

(12) PATENT APPLICATION PUBLICATION
(19) INDIA
(22) Date of filing of Application :01/10/2009
(21) Application No.2292/MUM/2009 A
(43) Publication Date : 14/03/2014

(54) Title of the invention : COMPOUNDS FOR THE TREATMENT OF DYSLIPIDEMIA AND RELATED DISEASES

(51) International classification	:C07D417/14, C07D405/14, C07D413/14
(31) Priority Document No	:NA
(32) Priority Date	:NA
(33) Name of priority country	:NA
(86) International Application No	:NA
Filing Date	:NA
(87) International Publication No	:N/A
(61) Patent of Addition to Application Number	:NA
Filing Date	:NA
(62) Divisional to Application Number	:NA
Filing Date	:NA

(71)**Name of Applicant :**
1)CADILA HEALTHCARE LIMITED
Address of Applicant :ZYDUS RESEARCH CENTRE, ZYDUS TOWER, SATELLITE CROSS ROADS, SARKHEJ-GANDHINAGAR HIGHWAY, AHMEDABAD - 380015, Gujarat India
(72)**Name of Inventor :**
1)KALAPATAPU V. V. M. SAIRAM
2)PINGALI HARIKISHOR
3)JAIN MUKUL R.

(57) Abstract :
The present invention relates to compounds of the general formula (I), their tautomeric forms, their stereoisomers, their pharmaceutically acceptable salts, pharmaceutical compositions containing them, methods for their preparation, use of these compounds in medicine and the intermediates involved in their preparation

No. of Pages : 73 No. of Claims : 15

(12) PATENT APPLICATION PUBLICATION
(19) INDIA
(22) Date of filing of Application :10/02/2011
(21) Application No.394/MUM/2011 A
(43) Publication Date : 14/03/2014

(54) Title of the invention : GENERATION OF COMPRESSED AIR BY PLACING SEVERAL SHOCK ABSORBER MECHANISMS BETWEEN THE FRONT/REAR AXLE ASSEMBLY AND THE CHASSIS/BODY OF ANY TYPE OF AUTOMOBILE VEHICLES TO GATHER COMPRESSION EFFECT WHEN IT IS IN RUNNING MODE TO GENERATE COMPRESSED AIR AND SUBSEQUENTLY BY THE USE OF THIS COMPRESSED AIR AND WITH THE HELP OF AIR MOTOR ANY TYPE OF AUTOMOBILE VEHICLES WILL BE DRIVEN OR WITH THE HELP OF AIR MOTOR AND GENERATOR ELECTRICITY WILL BE PRODUCED OR THIS COMPRESSED.....APPLICATIONS OF USE.

(51) International classification	:B60G21/00,B60G 13/14
(31) Priority Document No	:NA
(32) Priority Date	:NA
(33) Name of priority country	:NA
(86) International Application No	:NA
Filing Date	:NA
(87) International Publication No	: NA
(61) Patent of Addition to Application Number	:NA
Filing Date	:NA
(62) Divisional to Application Number	:NA
Filing Date	:NA

(71)**Name of Applicant :**
1)SANTOSH ARVIND PRADHAN
Address of Applicant :'ARUNODAYA',PLOT NO.51,PIONEER HOUSING SOCIETY, SWAWLAMBI NAGAR,NAGPUR 440025 Maharashtra India
(72)**Name of Inventor :**
1)SANTOSH ARVIND PRADHAN

(57) Abstract :
I have placed Compressed Air collection or receiver tank which is being attached to the several linear motion operated shock absorber mechanisms in an Automobile vehicles or Railway trains. I have placed several linear motion operated shock absorber mechanisms between the gaps of front axle assembly to rear axle assembly. The linear motion operated shock absorber mechanisms has been attached to the front axle assembly, rear axle assembly at one side and to chassis body on another side on any type of Automobile vehicles like Trucks, Buses, Tippers, Trailers, LCV, MCV, Cars, Jeeps, SUV, Motorcycles, Scooters, Cycles, Cycle rickshaws, any two wheeler vehicles, any three wheeler vehicles, any four wheeler vehicles, Railway Trains, Railway bogies, Railway wagons, Metro trains, Metro wagons, Ships or on any type of vehicles which are running on road / earth to gather compression effect of any type of Automobile vehicles like Trucks, Buses, Tippers, Trailers, LCV, MCV, Cars, Jeeps, SUV, Motorcycles, Scooters, Cycles, Cycle rickshaws, any two wheeler vehicles, any three wheeler vehicles, any four wheeler vehicles, Railway Trains, Railway bogies, Railway wagons, Metro trains, Metro wagons, Ships or on any type of vehicles which are running on road / earth. The linear motion operated shock absorber mechanisms has been attached to the front axle assembly, rear axle assembly at one side and to chassis body on another side just like shock ups in any automobile vehicles. But these linear motion operated shock absorber mechanisms will absorb the shocks due to uneven road conditions / railway tracks; simultaneously it will generate compressed air for us as free energy. Whenever any type of Automobile vehicles like Trucks, Buses, Tippers, Trailers, LCV, MCV, Cars, Jeeps, SUV, Motorcycles, Scooters, Cycles, Cycle rickshaws, any two wheeler vehicles, any three wheeler vehicles, any four wheeler vehicles, Railway Trains, Railway bogies, Railway wagons, Metro trains, Metro wagons, Ships or on any type of vehicles which are running on road / earth or any standard height and length vehicles will start running than due to uneven waviness present in any type of roads or uneven waviness in any type of Railway tracks or due to uneven waves in any Sea / rivers the linear motion operated shock absorber mechanisms attached in any type of Automobile vehicles like Trucks, Buses, Tippers, Trailers, LCV, MCV, Cars, Jeeps, SUV, Motorcycles, Scooters, Cycles, Cycle rickshaws, any two wheeler vehicles, any three wheeler vehicles, any four wheeler vehicles, Railway Trains, Railway bogies, Railway wagons, Metro trains, Metro wagons, Ships or on any type of vehicles which are running on road / earth or any standard height and length vehicles will get-activated and it-will start reciprocating action with the help of springs placed in it and thus will be absorbing the shocks and simultaneously it will produce Compressed air as a free energy in running vehicles. I have placed large numbers of linear motion operated shock absorber mechanisms between the gaps of front axle assembly to rear axle assembly to absorb the shocks and simultaneously get the continuous pressure, flow and volume of Compressed air as free energy. As the Compressed air as free energy passes through each of the galvanized milled steel pipes, galvanized tees, galvanized bends andnon return valves and through main common pipeline, I will get a very big volume of continuous flow and pressurized Compressed air as free energy. Compressed air as free energy generating through this mechanism will go to the common compressed air collection tank through pipelines and later on it will be directed to go to the Air Turbine motor / Air motor and after impacting of compressed air in Air turbine motor / Air motor it will start rotating. The shaft of the Air turbine motor / Air motor is being coupled with the shaft of the generator and after impacting of compressed air in Air turbine motor / Air motor it will start rotating along with the shaft of the generator and after getting the required revolution per minute (RPM) generator it will start producing electricity which will be controlled by the control panel and this electricity generated can be used to drive any type of Automobile vehicles like Trucks, Buses, Tippers, Trailers, LCV, MCV, Cars, Jeeps, SUV, Motorcycles, Scooters, Cycles, Cycle rickshaws, any two wheeler vehicles, any three wheeler vehicles, any four wheeler vehicles, Railway Trains, Railway bogies, Railway wagons, Metro trains, Metro wagons, Ships or on any type of vehicles which are running on road / earth or any standard height and length vehicles with the help of electric motor or this electricity generated can be used to charge any type of batteries present in any type of Automobile vehicles like Trucks, Buses, Tippers, Trailers, LCV, MCV, Cars, Jeeps, SUV, Motorcycles, Scooters, Cycles, Cycle rickshaws, any two wheeler vehicles, any three wheeler vehicles, any four wheeler vehicles, Railway Trains, Railway bogies, Railway wagons, Metro trains, Metro wagons, Ships or on any type of vehicles which are running on road / earth / sea or any standard height and length vehicles or the compressed air which is being generated can be directly use to rotate the Air turbine motor / Air motor to drive any type of Automobile vehicles like Trucks, Buses, Tippers, Trailers, LCV, MCV, Cars, Jeeps, SUV, Motorcycles, Scooters, Cycles, Cycle rickshaws, any two wheeler vehicles, any three wheeler vehicles, any four wheeler vehicles, Railway Trains, Railway bogies, Railway wagons, Metro trains Metro wagons, Ships or on any type of vehicles which are running on road / earth / sea or any standard height and length vehicles or this compressed air which is being generated can be used to generate high pressure compressed air with the help of aligning Air turbine motor / Air motor and high pressure compressor in the running any type of Automobile vehicles like Trucks, Buses, Tippers, Trailers, LCV, MCV, Cars, Jeeps, SUV, Motorcycles, Scooters, Cycles, Cycle rickshaws, any two wheeler vehicles, any three wheeler vehicles, any four wheeler vehicles, Railway Trains, Railway bogies, Railway wagons, Metro trains, Metro wagons, Ships or on any type of vehicles which are running on road / earth / sea or any standard height and length .vehicles high pressure compressed air thus generated will be stored in FRP and epoxy coated high pressure sustaining tank and later on this high pressure compressed air will be directed to go in to compressed air operated engines to drive any type of Automobile vehicles like Trucks, Buses, Tippers, Trailers, LCV, MCV, Cars, Jeeps, SUV, Motorcycles, Scooters, Cycles, Cycle rickshaws, any two wheeler vehicles, any three wheeler vehicles, any four wheeler vehicles, Railway Trains, Railway bogies, Railway wagons, Metro trains, Metro wagons, Ships or on any type of vehicles which are running on road / earth / sea or any standard height and length vehicles or the generated compressed air can be directly used to drive compressed air operated engine or the generated compressed air can be used to drive the air turbine motor / air motor which is being attached to the air compressor of any type of Automobile vehicles like Trucks, Buses, Tippers, Trailers, LCV, MCV, Cars, Jeeps, SUV, Motorcycles, Scooters, Cycles, Cycle rickshaws, any two wheeler vehicles, any three wheeler vehicles, any four wheeler vehicles, Railway Trains, Railway bogies, Railway wagons, Metro trains, Metro wagons, Ships or on any type of vehicles which are running on road / earth / sea or any standard height and length vehicles to rotate the air compressor which will eventually give chilled air inside the vehicles / chilled air in any refrigerator or the generated compressed air can be used to drive the air turbine motor / air motor which is being attached to the alternator of any type of Automobile vehicles like Trucks, Buses, Tippers, Trailers, LCV, MCV, Cars, Jeeps, SUV, Motorcycles, Scooters, Cycles, Cycle rickshaws, any two wheeler vehicles, any three wheeler vehicles, any four wheeler vehicles, Railway Trains, Railway bogies, Railway wagons, Metro trains, Metro wagons, Ships or on any type of vehicles which are running on road / earth / sea or any standard height and length vehicles to rotate the alternator which will eventually produce electricity to charge the batteries or the generated compressed air can be used to drive the air turbine motor / air motor which is being attached to the starter motor of any type of Automobile vehicles like Trucks, Buses, Tippers, Trailers, LCV, MCV, Cars, Jeeps, SUV, Motorcycles, Scooters, Cycles, Cycle rickshaws, any two wheeler vehicles, any three wheeler vehicles, any four wheeler vehicles, Railway Trains, Railway bogies, Railway wagons, Metro trains, Metro wagons, Ships or on any type of vehicles which are running on road / earth / sea or any standard height and length vehicles to rotate the starter motor to start the vehicles or the generated compressed air can be directly stored in storage tank which will be used fill the compressed air in rubber tubes of the wheels of the vehicles or the generated compressed air can be used to drive the compressed air operated jacks for lifting purpose. After impacting of compressed air in Air turbine motor / Air motor the residual compressed air energy will again be directed to go to the reversal air collection tank if it is charged else wise it will be released in atmosphere. The electricity generated by the above said procedure will be clean and environmentally friendly also.

No. of Pages : 15 No. of Claims : 13

(12) PATENT APPLICATION PUBLICATION
(19) INDIA
(22) Date of filing of Application :18/03/2011
(21) Application No.768/MUM/2011 A
(43) Publication Date : 14/03/2014

(54) Title of the invention : IMPROVED CAGE NUT ASSEMBLY USED IN FIXING ONE STRUCTURAL MEMBER TO ANOTHER

(51) International classification	:F16B39/284, F16B37/04
(31) Priority Document No	:NA
(32) Priority Date	:NA
(33) Name of priority country	:NA
(86) International Application No	:NA
Filing Date	:NA
(87) International Publication No	: NA
(61) Patent of Addition to Application Number	:NA
Filing Date	:NA
(62) Divisional to Application Number	:NA
Filing Date	:NA

(71)**Name of Applicant :**
1)LARSEN & TOUBRO LIMITED
Address of Applicant :L & T House Ballard Estate Mumbai 400 001 State of Maharashtra India
(72)**Name of Inventor :**
1)SHAH Tushar N.;
2)LASTE Rohidas H.;

(57) Abstract :
This invention relates generally to a cage nut assembly and more particularly to an improved cage nut assembly used in fixing one structural member to another. It comprises a retainer cage comprising a bent profile for trapping a fastener, a slot for anti-rotation of said nut; and a duality of projections for firm fixing of said assembly. It provides Perfect & Proper engagement of this retainer fastener within structural frame member. Also it gives high torsion strength to a cage structure.

No. of Pages : 17 No. of Claims : 6

(12) PATENT APPLICATION PUBLICATION
(19) INDIA
(22) Date of filing of Application :12/09/2012

(21) Application No.2645/MUM/2012 A
(43) Publication Date : 14/03/2014

(54) Title of the invention : HEAT EXCHANGER

(51) International classification	:F28D7/12, F28F23/00, B21D53/08
(31) Priority Document No	:NA
(32) Priority Date	:NA
(33) Name of priority country	:NA
(86) International Application No	:NA
Filing Date	:NA
(87) International Publication No	: NA
(61) Patent of Addition to Application Number	:NA
Filing Date	:NA
(62) Divisional to Application Number	:NA
Filing Date	:NA

(71)**Name of Applicant :**
1)TATA MOTORS LIMITED
Address of Applicant :Bombay House 24 Homi Mody Street Hutatma Chowk Mumbai 400 001 Maharashtra India
(72)**Name of Inventor :**
1)SANJOY BISWAS

(57) Abstract :
The embodiments of the present disclosure relate to a hollow housing with a converging portion for converting a peripheral fluid vortex into a substantially centered vortex in an opposite direction the hollow housing mounted with an inlet to form an inlet stream into the peripheral vortex an outlet for receiving the substantially centered vortex and a plurality of heat exchanging fins on the converging portion for dissipating heat associated with the inlet stream.

No. of Pages : 17 No. of Claims : 9

(12) PATENT APPLICATION PUBLICATION
(19) INDIA
(22) Date of filing of Application :16/03/2011
(21) Application No.754/MUM/2011 A
(43) Publication Date : 14/03/2014

(54) Title of the invention : TRANSMISSION SHAFT WITH SPLIT ROTOR TO OPERATE ALL POLES OF SWITCH SIMULTANEOUSLY

(51) International classification	:F16C1/04, F16C3/03
(31) Priority Document No	:NA
(32) Priority Date	:NA
(33) Name of priority country	:NA
(86) International Application No	:NA
Filing Date	:NA
(87) International Publication No	: NA
(61) Patent of Addition to Application Number	:NA
Filing Date	:NA
(62) Divisional to Application Number	:NA
Filing Date	:NA

(71)**Name of Applicant :**
1)LARSEN & TOUBRO LIMITED
Address of Applicant :L & T House Ballard Estate Mumbai 400 001 State of Maharashtra India
(72)**Name of Inventor :**
1)PATIL Rohit Naresh;
2)THAKUR Pankaj Dattatraya;
3)FEGADE Pramod L.;

(57) Abstract :
The present invention relates to a rotor assembly . The assembly comprising a rotor means having a pair of end/side surfaces where the surfaces comprising side A and side B; plurality of male means where each male means substantially positioned on both said sides surfaces of the rotor means to provide with engagement feature; cladding means having a substantially C shaped module adapted to enhance the electrodynamics forces generated due to specific profile & arrangement of moving and fixed contacts ; a pair of moving contact means made of copper component which makes and breaks with terminals to make switch ON and OFF respectively; spring means made of steel component adapted to provide pressure to contacts.

No. of Pages : 23 No. of Claims : 6

(12) PATENT APPLICATION PUBLICATION
(19) INDIA
(22) Date of filing of Application :03/09/2012
(21) Application No.2554/MUM/2012 A
(43) Publication Date : 14/03/2014

(54) Title of the invention : METHOD AND SYSTEM FOR COMPLIANCE TESTING IN A CLOUD STORAGE ENVIRONMENT

(51) International classification :G06F17/30
(31) Priority Document No :NA
(32) Priority Date :NA
(33) Name of priority country :NA
(86) International Application No :NA
Filing Date :NA
(87) International Publication No : NA
(61) Patent of Addition to Application Number :NA
Filing Date :NA
(62) Divisional to Application Number :NA
Filing Date :NA

(71)**Name of Applicant :**
1)TATA CONSULTANCY SERVICES LIMITED
Address of Applicant :NIRMAL BUILDING, 9TH FLOOR, NARIMAN POINT, MUMBAI 400021, Maharashtra India
(72)**Name of Inventor :**
1)DAYAL, REENA
2)GUPTA, NISHI
3)AGARWAL, HANSI

(57) Abstract :
The invention provides automated test suite for compliance testing of cloud storage server to a Cloud Data Management Interface (CDMI) by performing functional testing of CRUD (Create, Read, Update, and Delete) operations. It offers a solution containing test scripts for validating the response from CRUD operations performed on CDMI objects and checks for the cloud storage to be CDMI compliant.

No. of Pages : 25 No. of Claims : 14

(12) PATENT APPLICATION PUBLICATION
(19) INDIA
(22) Date of filing of Application :15/03/2011
(21) Application No.2556/MUM/2010 A
(43) Publication Date : 14/03/2014

(54) Title of the invention : CYCLIC THERMOCHEMICAL DISSOCIATION OF CARBON DIOXIDE AND WATER

(51) International classification	:C01B3/06, C01B3/12
(31) Priority Document No	:NA
(32) Priority Date	:NA
(33) Name of priority country	:NA
(86) International Application No	:NA
Filing Date	:NA
(87) International Publication No	: NA
(61) Patent of Addition to Application Number	:NA
Filing Date	:NA
(62) Divisional to Application Number	:NA
Filing Date	:NA

(71)**Name of Applicant :**
1)ABHISHEK CHANDRASHEKHAR MALVE
Address of Applicant :7, BHAKTI BHAVAN APARTMENT, B/H HOTEL SURYA, PRASANNA COLONY, INDIRANAGAR, NASHIK - 422 009, Maharashtra India
2)UMESH SURENDRA TAMBOLI
(72)**Name of Inventor :**
1)ABHISHEK CHANDRASHEKHAR MALVE
2)UMESH SURENDRA TAMBOLI

(57) Abstract :
The invention comprises a process of cyclic thermochemical dissociation of oxides catalysed by a metal compound of general structural formula MX, wherein M is a metal; X is none or oxygen or halogen, the said oxygen or halogen present in moles equivalent to M; comprising at least a step of recovering anhydrous metal halide from a process stream and recycling the metal halide or thermally decomposing the same to metal and halogen for recycling. The oxide selected for dissociation may be carbon-dioxide or water. After dissociation of oxides, the products of the reaction undergo a series of reactions comprising a reaction with a halogen, formation of metal halides and oxyhalides as intermediates, thermal decomposition of metal oxyhalides to recover metal oxides and Iodine for recycle, recovery of metal halides for recycle and thermal decomposition of metal halides to metal and halogen for recycle in the said cyclic process.

No. of Pages : 47 No. of Claims : 21

(12) PATENT APPLICATION PUBLICATION
(19) INDIA
(22) Date of filing of Application :03/09/2012
(21) Application No.2556/MUM/2012 A
(43) Publication Date : 14/03/2014

(54) Title of the invention : A PAIR OF INTERLOCKING BRICKS

(51) International classification	:E04B2/08, E04B2/02, E04B2/06
(31) Priority Document No	:NA
(32) Priority Date	:NA
(33) Name of priority country	:NA
(86) International Application No	:NA
Filing Date	:NA
(87) International Publication No	: NA
(61) Patent of Addition to Application Number	:NA
Filing Date	:NA
(62) Divisional to Application Number	:NA
Filing Date	:NA

(71)**Name of Applicant :**
1)MADHUKAR SHRIKRISHNA OAK
Address of Applicant :JAYRAM GAYKAR NIWAS, NEAR HANUMAN MANDIR, ADHAR WAD NAKA, JAIL ROAD, KALYAN (W) 421 301 Maharashtra India
(72)**Name of Inventor :**
1)MADHUKAR SHRIKRISHNA OAK

(57) Abstract :
The present invention relates to an improved interlocking brick comprising of at least one protrusion and the second brick comprising of at least one complementary groove at the position,corresponding to the position of the protrusion on the first brick, the said first and second bricks interlock upon mating.

No. of Pages : 12 No. of Claims : 5

(12) PATENT APPLICATION PUBLICATION
(19) INDIA
(22) Date of filing of Application :22/02/2011
(21) Application No.485/MUM/2011 A
(43) Publication Date : 14/03/2014

(54) Title of the invention : AN IMPROVED PROCESS FOR THE PREPARATION OF MILNACIPRAN AND SALTS THEREOF

(51) International classification	:C07C237/20, C07C231/16
(31) Priority Document No	:NA
(32) Priority Date	:NA
(33) Name of priority country	:NA
(86) International Application No	:NA
Filing Date	:NA
(87) International Publication No	: NA
(61) Patent of Addition to Application Number	:NA
Filing Date	:NA
(62) Divisional to Application Number	:NA
Filing Date	:NA

(71)**Name of Applicant :**
1)TORRENT PHARMACEUTICALS LTD.
Address of Applicant :TORRENT HOUSE, OFF ASHRAM ROAD, NEAR DINESH HALL, AHMEDABAD 380 009, Gujarat India
(72)**Name of Inventor :**
1)SUNIL SADANAND NADKARNI
2)ARUN KUMAR GUPTA
3)MANOJ PRABHAWAT
4)DILIP RAMOLIYA
5)MANISH PARIKH
6)RAJESH THETE
7)NSP NAIDU

(57) Abstract :
The present invention relates to process of preparation milnacipran and salts thereof. The process involved for the preparation of milnacipran and salt thereof is cost effective, commercially viable and industrially feasible. Further salt of compound of milnacipran obtained by this process is having higher yield and purity.

No. of Pages : 17 No. of Claims : 10

(12) PATENT APPLICATION PUBLICATION
(19) INDIA
(22) Date of filing of Application :27/09/2012
(21) Application No.2822/MUM/2012 A
(43) Publication Date : 14/03/2014

(54) Title of the invention : BREAK INJECTION AT WORK ASSIGNMENT ENGINE OF CONTACT CENTER

(51) International classification :G06F15/00
(31) Priority Document No :13/408,793
(32) Priority Date :29/02/2012
(33) Name of priority country :U.S.A.
(86) International Application No :NA
Filing Date :NA
(87) International Publication No : NA
(61) Patent of Addition to Application Number :NA
Filing Date :NA
(62) Divisional to Application Number :NA
Filing Date :NA

(71)**Name of Applicant :**
1)AVAYA INC
Address of Applicant :211, MOUNT AIRY ROAD BASKING RIDGE NEW JERSEY 07920 U.S.A.
(72)**Name of Inventor :**
1)JOYLEE KOHLER
2)ANDREW D. FLOCKHART
3)ROBERT C. STEINER

(57) Abstract :
A contact center is described along with various methods and mechanisms for administering the same. The contact center proposed herein provides the ability to, among other things, include a break-type work item in a work pool that also contains traditional work items. The break-type work item comprises attributes that enable the break-type work item to be routed to one or more resources in the contact center with a work assignment engine that routes the traditional work items.

No. of Pages : 29 No. of Claims : 10

(12) PATENT APPLICATION PUBLICATION
(19) INDIA
(22) Date of filing of Application :27/09/2012
(21) Application No.2825/MUM/2012 A
(43) Publication Date : 14/03/2014

(54) Title of the invention : WORK ASSIGNMENT DEFERMENT DURING PERIODS OF AGENT SURPLUS

(51) International classification :G06Q40/00
(31) Priority Document No :13/457, 253
(32) Priority Date :26/04/2012
(33) Name of priority country :U.S.A.
(86) International Application No :NA
Filing Date :NA
(87) International Publication No :N/A
(61) Patent of Addition to Application Number :NA
Filing Date :NA
(62) Divisional to Application Number :NA
Filing Date :NA

(71)**Name of Applicant :**
1)AVAYA INC
Address of Applicant :211, MOUNT AIRY ROAD BASKING RIDGE NEW JERSEY 07920 U.S.A.
(72)**Name of Inventor :**
1)ANDREW D. FLOCKHART
2)ROBERT C. STEINER
3)JOYLEE KOHLER

(57) Abstract :
A contact center is described along with various methods and mechanisms for administering the same. The contact center proposed herein provides the ability to, among other things, support deferring work item routing decisions for a predetermined amount of time even when agents that are technically qualified to handle the work item are available. The deferment of work item routing decisions helps to achieve better matching and, therefore, increases contact center efficiency even though decisions are delayed.

No. of Pages : 28 No. of Claims : 10

(12) PATENT APPLICATION PUBLICATION
(19) INDIA
(22) Date of filing of Application :23/02/2011
(21) Application No.498/MUM/2011 A
(43) Publication Date : 14/03/2014

(54) Title of the invention : ANTINOCICEPTIVE AND ANTIALLODYNIC PROFILE OF RENIN INHIBITORS

(51) International classification	:C07C255/29, C07C51/00
(31) Priority Document No	:NA
(32) Priority Date	:NA
(33) Name of priority country	:NA
(86) International Application No	:NA
Filing Date	:NA
(87) International Publication No	: NA
(61) Patent of Addition to Application Number	:NA
Filing Date	:NA
(62) Divisional to Application Number	:NA
Filing Date	:NA

(71)**Name of Applicant :**
1)CADILA HEALTHCARE LIMITED
Address of Applicant :ZYDUS TOWER, SATELLITE CROSS ROAD, AHMEDABAD - 380 015, GUJARAT, INDIA.
(72)**Name of Inventor :**
1)PATEL, RAKESH
2)PAWAR, VISHWANATH
3)JAIN, MUKUL

(57) Abstract :
The invention provides compositions and methods of treatment for various painful conditions i.e. inflammatory, visceral and neuropathic pain by using rennin inhibitors.

No. of Pages : 26 No. of Claims : 18

(12) PATENT APPLICATION PUBLICATION
(19) INDIA
(22) Date of filing of Application :11/03/2011
(21) Application No.693/MUM/2011 A
(43) Publication Date : 14/03/2014

(54) Title of the invention : COMPOSITION FOR IMPROVING ENDOMETRIAL THICKNESS DURING OVARIAN STIMULATION

(51) International classification	:A61K38/09, A61K45/06
(31) Priority Document No	:NA
(32) Priority Date	:NA
(33) Name of priority country	:NA
(86) International Application No	:NA
Filing Date	:NA
(87) International Publication No	:N/A
(61) Patent of Addition to Application Number	:NA
Filing Date	:NA
(62) Divisional to Application Number	:NA
Filing Date	:NA

(71)**Name of Applicant :**
1)SANZYME LIMITED
Address of Applicant :A-2, SILVER BELLE, SRINIVAS BAGADKAR MARG, J.B. NAGAR, ANDHERI (EAST), MUMBAI - 400 059, Maharashtra India
(72)**Name of Inventor :**
1)K.V.S. PRASAD
2)JAY L. SOMAN

(57) Abstract :
The present invention relates to a pharmaceutical composition comprising combination of highly purified Follicle Stimulating Hormone (FSH) and highly purified Human Chorionic Gonadotropin (HCG) for improving endometrial thickness during ovarian stimulation. Particularly, the invention also provides composition for improving endometrium thickness during ovarian stimulation comprising combination of 5 IU to 50 IU of highly purified FSH and 50 IU to 1000 IU of highly purified hCG per dosage and pharmaceutical formulations comprising the same.

No. of Pages : 20 No. of Claims : 10

(12) PATENT APPLICATION PUBLICATION
(19) INDIA
(22) Date of filing of Application :02/03/2011
(21) Application No.588/MUM/2011 A
(43) Publication Date : 14/03/2014

(54) Title of the invention : TRANSVERSE AXIAL MECHANISM FOR SWITCHING DEVICE

(51) International classification	:H01L27/10, H01L45/00
(31) Priority Document No	:NA
(32) Priority Date	:NA
(33) Name of priority country	:NA
(86) International Application No	:NA
Filing Date	:NA
(87) International Publication No	: NA
(61) Patent of Addition to Application Number	:NA
Filing Date	:NA
(62) Divisional to Application Number	:NA
Filing Date	:NA

(71)**Name of Applicant :**
1)LARSEN & TOUBRO LIMITED
Address of Applicant :L & T House Ballard Estate Mumbai 400 001 State of Maharashtra India
(72)**Name of Inventor :**
1)SAVALIYA Swati
2)SHARMA Udit

(57) Abstract :
The present invention relates to a transverse axial mechanism for switching devices. The mechanism comprises a conventional contact system comprising plurality of contact means (6,7), a conventional magnet system comprising plurality of magnet means (1,2) located so as to generate electromagnetic force along a predetermined vertical axis, a connecting limb means (5). The contact system contact system is operatively arranged along a predetermined substantially horizontal axis having perpendicular relationship with the vertical axis along which the electromagnetic force is established. The connecting limb means has an appropriate angle adapted to establish a force component of said contact system along said electromagnetic axis. The connecting limb further has an appropriate length such that said contact system acquires substantially the same velocity as that of the magnet system.

No. of Pages : 18 No. of Claims : 10

(12) PATENT APPLICATION PUBLICATION
(19) INDIA
(22) Date of filing of Application :07/03/2011

(21) Application No.632/MUM/2011 A
(43) Publication Date : 14/03/2014

(54) Title of the invention : COLLABORATIVE PLATFORM FOR IT SERVICE AND VENDOR MANAGEMENT

(51) International classification	:G06F17/50 , G06Q10/06
(31) Priority Document No	:NA
(32) Priority Date	:NA
(33) Name of priority country	:NA
(86) International Application No	:NA
Filing Date	:NA
(87) International Publication No	:N/A
(61) Patent of Addition to Application Number	:NA
Filing Date	:NA
(62) Divisional to Application Number	:NA
Filing Date	:NA

(71)**Name of Applicant :**
1)TATA CONSULTANCY SERVICES LIMITED
Address of Applicant :NIRMAL BUILDING, 9TH FLOOR, NARIMAN POINT, MUMBAI 400021, Maharashtra India
(72)**Name of Inventor :**
1)MOHANTY SANTOSH KUMAR
2)MAZUMDER ABHIJIT KUMAR
3)GOPAL VIJAYALAKSHMI
4)BANERJEE SHOUVIK
5)MAJHI DILLIP KUMAR
6)SHOME MANAS

(57) Abstract :
The present invention provides a system and method for providing enterprise level platform that enables collaborative business service delivery and governance through access to underlying infrastructure for connected customer-vendor systems. The said enterprise platform that seamlessly brings together various point solutions with intent of providing a single window that enables access to the underlying infrastructure for a connected customer-vendor IT operations.

No. of Pages : 41 No. of Claims : 24

(12) PATENT APPLICATION PUBLICATION
(19) INDIA
(22) Date of filing of Application :16/03/2011
(21) Application No.756/MUM/2011 A
(43) Publication Date : 14/03/2014

(54) Title of the invention : INTEGRATED FUSE HOLDER AND FUSE CONTACT SYSTEM IN SWITCH DISCONNECTOR FUSE

(51) International classification	:H01H31/12, H01H71/20
(31) Priority Document No	:NA
(32) Priority Date	:NA
(33) Name of priority country	:NA
(86) International Application No	:NA
Filing Date	:NA
(87) International Publication No	: NA
(61) Patent of Addition to Application Number	:NA
Filing Date	:NA
(62) Divisional to Application Number	:NA
Filing Date	:NA

(71)**Name of Applicant :**
1)LARSEN & TOUBRO LIMITED
Address of Applicant :L & T House Ballard Estate Mumbai 400 001 State of Maharashtra India
(72)**Name of Inventor :**
1)BHANU Ashwin;
2)KUMAR Harshal;
3)AGARWAL Naveen;
4)SINHA Neeraj;
5)VERMA Deepak Kumar;

(57) Abstract :
The present invention relates to an improved contact system in switch disconnector fuse. The system comprises a fuse link (4), atleast one moving contact means (1), atleast one terminal means (2), atleast one arrangement (3) substantially positioned between the fuse link (4) and moving contact means (1). The arrangement (3) comprises an upper projection(5), a lower projection, a web means (6) and a slit means (7) with a substantial curve/bend (8) at one of the end. The web means (6) connecting the upper and lower projection. The upper and lower projection is substantially positioned opposite to each other. The upper and lower projection each extending from the diametric end of the web means and transverse to the web means to define a substantially Z shaped modular structure. The web means is integrated with the slit means.

No. of Pages : 15 No. of Claims : 8

(12) PATENT APPLICATION PUBLICATION
(19) INDIA
(22) Date of filing of Application :10/02/2011

(21) Application No.396/MUM/2011 A
(43) Publication Date : 14/03/2014

(54) Title of the invention : GENERATION OF HYDRAULIC ENERGY BY PLACING HYDRAULIC SHOCK ABSORBER MECHANISMS BETWEEN THE FRONT/REAR AXLE ASSEMBLY AND THE CHASSIS/BODY OF ANY TYPE OF AUTOMOBILE VEHICLES TO GATHER COMPRESSION EFFECT WHEN IT IS IN RUNNING MODE TO GENERATE PUMPED HYDRAULIC FLUID AND SUBSEQUENTLY BY THE USE OF THIS PUMPED HYDRAULIC FLUID ELECTRICITY WILL BE GENERATED WITH THE HELP OF HYDRAULIC MOTOR AND GENERATOR OR THIS PUMPED HYDRAULIC FLUID CAN ALSO BE USED TO DRIVE .....APPLICATIONS OF USE.

(51) International classification	:F03G7/08, F16F9/48, F16F9/49
(31) Priority Document No	:NA
(32) Priority Date	:NA
(33) Name of priority country	:NA
(86) International Application No	:NA
Filing Date	:NA
(87) International Publication No	: NA
(61) Patent of Addition to Application Number	:NA
Filing Date	:NA
(62) Divisional to Application Number	:NA
Filing Date	:NA

(71)**Name of Applicant :**
1)SANTOSH ARVIND PRADHAN
Address of Applicant :SANTOSH ARVIND PRADHAN, 'ARUNODAYA',PLOT NO.51,PIONEER HOUSING SOCIETY, SWAWLAMBI NAGAR,NAGPUR 440025 Maharashtra India
(72)**Name of Inventor :**
1)SANTOSH ARVIND PRADHAN

(57) Abstract :
I have placed hydraulic power pack which is being attached to the several linear motion operated shock absorber mechanisms in an Automobile vehicles or Railway trains. I have placed several linear motion operated shock absorber mechanisms between the gaps of front axle assembly to rear axle assembly. The linear motion operated shock absorber mechanisms has been attached to the front axle assembly, rear axle assembly at one side and to chassis body on another side on any type of Automobile vehicles like Trucks, Buses, Tippers, Trailers, LCV, MCV, Cars, Jeeps, SUV, Motorcycles, Scooters, Cycles, Cycle rickshaws, any two wheeler vehicles, any three wheeler vehicles, any four wheeler vehicles, Railway Trains, Railway bogies, Railway wagons, Metro trains, Metro wagons, Ships or on any type of vehicles which are running on road / earth to gather compression effect of any type of Automobile vehicles like Trucks, Buses, Tippers, Trailers, LCV, MCV, Cars, Jeeps, SUV, Motorcycles, Scooters, Cycles, Cycle rickshaws, any two wheeler vehicles, any three wheeler vehicles, any four wheeler vehicles, Railway Trains, Railway bogies, Railway wagons, Metro trains, Metro wagons, Ships or on any type of vehicles which are running on road / earth. The linear motion operated shock absorber mechanisms has been attached to the front axle assembly, rear axle assembly at one side and to chassis body on another side just like shock ups in any automobile vehicles. But these linear motion operated shock absorber mechanisms will absorb the shocks due to uneven road conditions / railway tracks; simultaneously it will generate pumped hydraulic fluid for us as free energy. Whenever any type of Automobile vehicles like Trucks, Buses, Tippers, Trailers, LCV, MCV, Cars, Jeeps, SUV, Motorcycles, Scooters, Cycles, Cycle rickshaws, any two wheeler vehicles, any three wheeler vehicles, any four wheeler vehicles, Railway Trains, Railway bogies, Railway wagons, Metro trains, Metro wagons, Ships or on any-type of vehicles which are running on road/ earth or any standard height and length vehicles will start running than due to uneven waviness present in any type of roads or uneven waviness in any type of Railway tracks or due to uneven waves in any Sea / rivers the linear motion operated shock absorber mechanisms attached in any type of Automobile vehicles like Trucks, Buses, Tippers, Trailers, LCV, MCV, Cars, Jeeps, SUV, Motorcycles, Scooters, Cycles, Cycle rickshaws, any two wheeler vehicles, any three wheeler vehicles, any four wheeler vehicles, Railway Trains, Railway bogies, Railway wagons, Metro trains, Metro wagons, Ships or on any type of vehicles which are running on road / earth or any standard height and length vehicles will get activated and it will start reciprocating action with the help of springs placed in it and thus will be absorbing the shocks and simultaneously it will produce pumped hydraulic fluid as a free energy in running vehicles. I have placed large numbers of linear motion operated shock absorber mechanisms between the gaps of front axle assembly to rear axle assembly to absorb the shocks and simultaneously get the continuous pressure, flow and volume of pumped hydraulic fluid as free energy. As the pumped hydraulic fluid as free energy passes through each of the galvanized milled steel pipes, galvanized tees, galvanized bends and non return valves and through main common pipeline, I will get a very big volume of continuous flow and pressurized pumped hydraulic fluid as free energy. Pumped hydraulic fluid as free energy generating through this mechanism will go to the hydraulic power pack through pipelines and later on it will be directed to go to the hydraulic motor and after impacting of pumped hydraulic fluid in hydraulic motor it will start rotating. The shaft of the hydraulic motor is being coupled with the shaft of the generator and after impacting of pumped hydraulic fluid in hydraulic motor it will start rotating along with the shaft of the generator and after getting the required revolution per minute (RPM) generator it will start producing electricity which will be controlled by the control panel and this electricity generated can be used to drive any type of Automobile vehicles like Trucks, Buses, Tippers, Trailers, LCV, MCV, Cars, Jeeps, SUV, Motorcycles, Scooters, Cycles, Cycle rickshaws, any two wheeler vehicles, any three wheeler vehicles, any four wheeler vehicles, Railway Trains, Railway bogies, Railway wagons, Metro trains, Metro wagons, Ships or on any type of vehicles which are running on road / earth or any standard height and length vehicles with the help of electric motor or this electricity generated can be used to charge any type of batteries present in any type of Automobile vehicles like Trucks, Buses, Tippers, Trailers, LCV, MCV, Cars, Jeeps, SUV, Motorcycles, Scooters, Cycles, Cycle rickshaws, any two wheeler vehicles, any three wheeler vehicles, any four wheeler vehicles, Railway Trains, Railway bogies, Railway wagons, Metro trains, Metro wagons, Ships or on any type of vehicles which are running on road / earth / sea or any standard height and length vehicles or the pumped hydraulic fluid which is being generated can be directly use to rotate the hydraulic motor to drive any type of Automobile vehicles like Trucks, Buses, Tippers, Trailers, LCV, MCV, Cars, Jeeps, SUV, Motorcycles, Scooters, Cycles, Cycle rickshaws, any two wheeler vehicles, any three wheeler vehicles, any four wheeler vehicles, Railway Trains, Railway bogies, Railway wagons, Metro trains, Metro wagons, Ships or on any type of vehicles which are running on road / earth / sea or any standard height and length vehicles or this pumped hydraulic fluid which is being generated can be used to generate high pressure compressed air with the help of aligning hydraulic motor and high pressure compressor in the running any type of Automobile vehicles like Trucks, Buses, Tippers, Trailers, LCV, MCV, Cars, Jeeps, SUV, Motorcycles, Scooters, Cycles, Cycle rickshaws, any two wheeler vehicles, any three wheeler vehicles, any four wheeler vehicles, Railway Trains, Railway bogies, Railway wagons, Metro trains, Metro wagons, Ships or on any type of vehicles which are running on road / earth / sea or any standard height and length vehicles high pressure compressed air thus generated will be stored in FRP and epoxy coated high pressure sustaining tank and later on this high pressure compressed air will be directed to go in to compressed air operated engines to drive any type of Automobile vehicles like Trucks, Buses, Tippers, Trailers, LCV, MCV, Cars, Jeeps, SUV, Motorcycles, Scooters, Cycles, Cycle rickshaws, any two wheeler vehicles, any three wheeler vehicles, any four wheeler vehicles, Railway Trains, Railway bogies, Railway wagons, Metro trains, Metro wagons, Ships or on any type of vehicles which are running on road / earth / sea or any standard height and length vehicles or the generated pumped hydraulic fluid can be directly used to drive pumped hydraulic fluid operated engine or the generated pumped hydraulic fluid can be used to drive the hydraulic motor which is being attached to the air compressor of any type of Automobile vehicles like Trucks, Buses, Tippers, Trailers, LCV, MCV, Cars, Jeeps, SUV, Motorcycles, Scooters, Cycles, Cycle rickshaws, any two wheeler vehicles, any three wheeler vehicles, any four wheeler vehicles, Railway Trains, Railway bogies, Railway wagons, Metro trains, Metro wagons, Ships or on any type of vehicles which are running on road / earth / sea or any standard height and length vehicles to rotate the air compressor which will eventually give chilled air inside the vehicles / chilled air in any refrigerator in the vehicle or the generated pumped hydraulic fluid can be used to drive the hydraulic motor which is being attached to the alternator of any type of Automobile vehicles like Trucks, Buses, Tippers, Trailers, LCV, MCV, Cars, Jeeps, SUV, Motorcycles, Scooters, Cycles, Cycle rickshaws, any two wheeler vehicles, any three wheeler vehicles, any four wheeler vehicles, Railway Trains, Railway bogies, Railway wagons, Metro trains, Metro wagons, Ships or on any type of vehicles which are running on road / earth / sea or any standard height and length vehicles to rotate the alternator which will eventually produce electricity to charge the batteries or the generated pumped hydraulic fluid can be used to drive the hydraulic motor which is being attached to the starter motor of any type of Automobile vehicles like Trucks, Buses, Tippers, Trailers, LCV, MCV, Cars, Jeeps, SUV, Motorcycles, Scooters, Cycles, Cycle rickshaws, any two wheeler vehicles, any three wheeler vehicles, any four wheeler vehicles, Railway Trains, Railway bogies, Railway wagons, Metro trains, Metro wagons, Ships or on any type of vehicles which are running on road / earth / sea or any standard height and length vehicles to rotate the starter motor to start the vehicles or the generated pumped hydraulic fluid can be directly stored in storage tank or hydraulic power pack which will be used to drive the pumped hydraulic fluid operated hydraulic jacks for lifting purpose. After impacting of pumped hydraulic fluid in hydraulic motor the residual pumped hydraulic fluid will again be directed to go to the hydraulic power pack tank and again with the help of linear motion operated shock absorber will do function and again pumped hydraulic fluid will be generated hence these cycle will continue as long as the vehicles will be in running mode. The electricity generated by the above said procedure will be clean and environmentally friendly also.

No. of Pages : 15 No. of Claims : 13

(12) PATENT APPLICATION PUBLICATION
(19) INDIA
(22) Date of filing of Application :18/03/2011
(21) Application No.766/MUM/2011 A
(43) Publication Date : 14/03/2014

(54) Title of the invention : AN IMPROVED LAYOUT/ ARRANGEMENT FOR CONTROLLER

(51) International classification	:F04B49/025 , F04D15/00
(31) Priority Document No	:NA
(32) Priority Date	:NA
(33) Name of priority country	:NA
(86) International Application No	:NA
Filing Date	:NA
(87) International Publication No	: NA
(61) Patent of Addition to Application Number	:NA
Filing Date	:NA
(62) Divisional to Application Number	:NA
Filing Date	:NA

(71)**Name of Applicant :**
1)LARSEN & TOUBRO LIMITED
Address of Applicant :L & T House Ballard Estate Mumbai 400 001 State of Maharashtra India
(72)**Name of Inventor :**
1)KHEDEKAR Abhishek G
2)NATH Subhasish
3)BHARAMBE Bhagawat S

(57) Abstract :
The present invention relates to An improved arrangement for a single phase submersible pump controller, the controller comprising at least one contactor to carry, make and break the line current of controller; at least one relay mounted on contactor for overload protection; at least one start capacitor connected in the circuit of controller to achieve the starting torque ; at least one pair of run capacitors mounted on start capacitor to achieve phase displacement respectively; at least one dual meter comprising ammeter and voltmeter for measurement of current through the circuit and voltage across the pole; at least one lamp is included for indication purpose; at least one terminal block provided in the controller for motor connection and input connections facility.

No. of Pages : 12 No. of Claims : 10

(12) PATENT APPLICATION PUBLICATION
(19) INDIA
(22) Date of filing of Application :18/03/2011
(21) Application No.767/MUM/2011 A
(43) Publication Date : 14/03/2014

(54) Title of the invention : AN IMPROVED ARRANGEMENT IN CIRCUIT BREAKER FOR BETTER SHORT CIRCUIT PERFORMANCE

(51) International classification	:H02H3/08, H02H7/10
(31) Priority Document No	:NA
(32) Priority Date	:NA
(33) Name of priority country	:NA
(86) International Application No	:NA
Filing Date	:NA
(87) International Publication No	: NA
(61) Patent of Addition to Application Number	:NA
Filing Date	:NA
(62) Divisional to Application Number	:NA
Filing Date	:NA

(71)**Name of Applicant :**
1)LARSEN & TOUBRO LIMITED
Address of Applicant :L & T House Ballard Estate Mumbai 400 001 State of Maharashtra India
(72)**Name of Inventor :**
1)JAMDAR Dinesh;

(57) Abstract :
The present invention relates to an improved arrangement in circuit breaker for better short circuit performance. The arrangement comprising atleast one arc runner; atleast one moving contact; atleast one fix contact runner; atleast one arc chute chamber. The arc runner includes a pair of limb means placed substantially parallel to each other to from an unique profile and the profile of arc runner assist in weakening the magnetic flux density above the arc due to current reversal thus increasing the force acting on arc towards arc chute chamber in initial phase of an arcing.

No. of Pages : 15 No. of Claims : 7

(12) PATENT APPLICATION PUBLICATION
(19) INDIA
(22) Date of filing of Application :18/03/2011
(21) Application No.770/MUM/2011 A
(43) Publication Date : 14/03/2014

(54) Title of the invention : SINGLE SOLENOID OPERATED MECHANISM FOR AUTOMATIC TRANSFER SWITCH ASSEMBLY

(51) International classification	:H02B1/36, H01H3/32
(31) Priority Document No	:NA
(32) Priority Date	:NA
(33) Name of priority country	:NA
(86) International Application No	:NA
Filing Date	:NA
(87) International Publication No	: NA
(61) Patent of Addition to Application Number	:NA
Filing Date	:NA
(62) Divisional to Application Number	:NA
Filing Date	:NA

(71)**Name of Applicant :**
1)LARSEN & TOUBRO LIMITED
Address of Applicant :L & T House Ballard Estate Mumbai 400 001 State of Maharashtra India
(72)**Name of Inventor :**
1)PATIL Rohit;
2)KHADILKAR Gayaree;
3)THAKUR Pankaj;

(57) Abstract :
The present invention relates to single solenoid operated mechanism. Particularly, the present invention relates to a mechanically interlocked, manually independent mechanism of electrical switches. More particularly, the present invention relates to single solenoid operated mechanism for automatic transfer switch used at places where isolation of two or more switches is necessary, more specifically in transfer switches. It comprises a solenoid assembly having a solenoid cylinder (5a) for holding a coil and a compression spring, a solenoid plunger moving linearly inside said cylinder and a compression spring (5c) having a plurality of substantially helical turns storing mechanical energy for facilitating making and breaking of said contact system etc. present invention provides for higher efficiency which is provided by rack and pinion mechanism.

No. of Pages : 30 No. of Claims : 5

(12) PATENT APPLICATION PUBLICATION
(19) INDIA
(22) Date of filing of Application :18/03/2011
(21) Application No.771/MUM/2011 A
(43) Publication Date : 14/03/2014

(54) Title of the invention : HERBAL CIGARETTE AND PROCESS OF PREPARATION THEREOF

(51) International classification	:A61k36/00, A24D 3/02, A24D1/18
(31) Priority Document No	:NA
(32) Priority Date	:NA
(33) Name of priority country	:NA
(86) International Application No	:NA
Filing Date	:NA
(87) International Publication No	: NA
(61) Patent of Addition to Application Number	:NA
Filing Date	:NA
(62) Divisional to Application Number	:NA
Filing Date	:NA

(71)**Name of Applicant :**
1)RAJAS UDAY NITSURE
Address of Applicant :A1, SANMAN SOCIETY, SUTAR PATH, SHIVTIRTH NAGAR, PAUD ROAD, KOTHURD, PUNE - 38 Maharashtra India
2)UDAY ANANT NITSURE
(72)**Name of Inventor :**
1)RAJAS UDAY NITSURE
2)UDAY ANANT NITSURE

(57) Abstract :
The present invention provides an herbal cigarette and a process of preparation thereof. The herbal cigarette has medicinal value. Further, the herbal cigarette in made by a process in which the herbal ingredients are rolled in regular white cigarette paper to which filter tip is attached. Furthermore, the herbal cigarette provides improved herbal mixture which gives flavors with improved medicinal value to the cigarette.

No. of Pages : 19 No. of Claims : 9

(12) PATENT APPLICATION PUBLICATION
(19) INDIA
(22) Date of filing of Application :27/09/2012
(21) Application No.2845/MUM/2012 A
(43) Publication Date : 14/03/2014

(54) Title of the invention : DYNAMIC ADJUSTMENT OF MULTI-DIMENSIONAL ROUTING RULE

(51) International classification :G06T11/20
(31) Priority Document No :13/408, 806
(32) Priority Date :29/02/2012
(33) Name of priority country :U.S.A.
(86) International Application No :NA
Filing Date :NA
(87) International Publication No :N/A
(61) Patent of Addition to Application Number :NA
Filing Date :NA
(62) Divisional to Application Number :NA
Filing Date :NA

(71)**Name of Applicant :**
1)AVAYA INC
Address of Applicant :211, MOUNT AIRY ROAD BASKING RIDGE NEW JERSEY 07920 U.S.A.
(72)**Name of Inventor :**
1)JOYLEE KOHLER
2)ANDREW D. FLOCKHART
3)ROBERT C. STEINER

(57) Abstract :
A contact center is described along with various methods and mechanisms for administering the same. The contact center proposed herein provides the ability to, among other things, support the ability to flexibly apply a plurality of different work assignment algorithms simultaneously, weight work item routing decisions received from each work assignment algorithm, and then make a final work item routing decision based on a weighted combination of the work item routing decisions.

No. of Pages : 33 No. of Claims : 10

(12) PATENT APPLICATION PUBLICATION
(19) INDIA
(22) Date of filing of Application :27/09/2012
(21) Application No.2846/MUM/2012 A
(43) Publication Date : 14/03/2014

(54) Title of the invention : ADJUSTMENT OF CONTACT ROUTING DECISIONS TO REWARD AGENT BEHAVIOR

(51) International classification :H04L12/56
(31) Priority Document No :13/408,782
(32) Priority Date :29/02/2012
(33) Name of priority country :U.S.A.
(86) International Application No :NA
Filing Date :NA
(87) International Publication No :N/A
(61) Patent of Addition to Application Number :NA
Filing Date :NA
(62) Divisional to Application Number :NA
Filing Date :NA

(71)**Name of Applicant :**
1)AVAYA INC
Address of Applicant :211, MOUNT AIRY ROAD BASKING RIDGE NEW JERSEY 07920 U.S.A.
(72)**Name of Inventor :**
1)JOYLEE KOHLER
2)ANDREW D. FLOCKHART
3)ROBERT C. STEINER

(57) Abstract :
A contact center is described along with various methods and mechanisms for administering the same. The contact center proposed herein provides the ability to, among other things, reward positive agent behavior and performance by providing the agent with rewards and incentives. The rewards and incentives are provided to the agent by altering one or more aspects of the routing logic in the contact center.

No. of Pages : 30 No. of Claims : 10

(12) PATENT APPLICATION PUBLICATION
(19) INDIA
(22) Date of filing of Application :27/09/2012
(21) Application No.2847/MUM/2012 A
(43) Publication Date : 14/03/2014

(54) Title of the invention : QUALIFIER SET CREATION FOR WORK ASSIGNMENT ENGINE

(51) International classification :H04M3/00
(31) Priority Document No :13/441,746
(32) Priority Date :06/04/2012
(33) Name of priority country :U.S.A.
(86) International Application No :NA
Filing Date :NA
(87) International Publication No : NA
(61) Patent of Addition to Application Number :NA
Filing Date :NA
(62) Divisional to Application Number :NA
Filing Date :NA

(71)**Name of Applicant :**
1)AVAYA INC
Address of Applicant :211, MOUNT AIRY ROAD BASKING RIDGE NEW JERSEY 07920 U.S.A.
(72)**Name of Inventor :**
1)STEINER, ROBERT C.
2)KOHLER, JOYLEE
3)FLOCKHART, ANDREW D.

(57) Abstract :
A contact center is described along with various methods and mechanisms for administering the same. The contact center proposed herein provides the ability to, among other things, define, in real-time, qualifier set combinations for work items. Thus, the contact center can create a dictionary of combinations of work item attributes that may be defined as work items are introduced to the system. The definition of the combinations allows for large qualifier sets without the large expenditure of resources to define all possible combinations of attributes for the contact center.

No. of Pages : 37 No. of Claims : 10

(12) PATENT APPLICATION PUBLICATION
(19) INDIA
(22) Date of filing of Application :16/03/2011
(21) Application No.744/MUM/2011 A
(43) Publication Date : 14/03/2014

(54) Title of the invention : AERATED SOAP BARS

(51) International classification	:C11D17/00, B65B3/04	(71)**Name of Applicant :**
(31) Priority Document No	:NA	**1)HINDUSTAN UNILEVER LIMITED**
(32) Priority Date	:NA	Address of Applicant :165/166 BACKBAY RECLAMATION, MUMBAI - 400020, Maharashtra India
(33) Name of priority country	:NA	(72)**Name of Inventor :**
(86) International Application No	:NA	**1)CHOUREY ANKUR**
Filing Date	:NA	**2)FLORIDO CAMILE**
(87) International Publication No	: NA	**3)LEOPOLDINO SERGIO ROBERTO**
(61) Patent of Addition to Application Number	:NA	**4)MAGON EDIRLEI ROBERTO**
Filing Date	:NA	**5)PEDRO ANDRE MESSIAS KRELL**
(62) Divisional to Application Number	:NA	**6)PUSHKARNA ANAL**
Filing Date	:NA	**7)RODRIGUES ANGELICA MARQUES**

(57) Abstract :
The invention relates to aerated soap bars. Generally, it is difficult to get aerated soap bars with the right level of aeration, because high viscosity of the molten soap mass sometimes makes it difficult to aerate it to the desired extent. The size and movement of air bubbles also play important roles. Bars with larger air bubbles have lower mechanical strength. As the molten We have determined that use of acrylates or cellulose ethers in aerated soap bars lead to bars with acceptable rate of wear, mush and lower density. The soaps also have a higher and more uniform air incorporation and better air retention. Disclosed are aerated soap bars having density from 0.2 to 0.99 g/cm , comprising: (i) 20 to 80 wt% soap; (ii) 2 to 40 wt% polyol; (iii) 5 to 50% water; and, (iv) 0.5 to 5 wt% electrolyte; wherein said bars comprise 0.1 to 5 wt% polymer selected from acrylates or cellulose ethers.

No. of Pages : 28 No. of Claims : 11

(12) PATENT APPLICATION PUBLICATION
(19) INDIA
(22) Date of filing of Application :14/01/2013
(21) Application No.118/MUMNP/2013 A
(43) Publication Date : 14/03/2014

(54) Title of the invention : SUBSTITUTED PYRIMIDINE AMMONIA COMPOUND AND USE THEREOF

(51) International classification :C07D239/47,A01N43/54,A01P3/00
(31) Priority Document No :201010554472.3
(32) Priority Date :19/11/2010
(33) Name of priority country :China
(86) International Application No :PCT/CN2011/082439
Filing Date :18/11/2011
(87) International Publication No :WO 2012/065574
(61) Patent of Addition to Application Number :NA
Filing Date :NA
(62) Divisional to Application Number :NA
Filing Date :NA

(71)**Name of Applicant :**
1)SINOCHEM CORPORATION
Address of Applicant :28 Fuxingmennei Dajie Xicheng District Beijing 100031 China
2)SHENYANG RESEARCH INSTITUTE OF CHEMICAL INDUSTRY CO. LTD.
(72)**Name of Inventor :**
1)LIU Changling
2)CHAI Baoshan
3)LI Zhinian
4)SUN Xufeng
5)SHAN Zhonggang

(57) Abstract :
The invention relates to substituted pyrimidine ammonia compounds. The structure of the compounds is represented as the general formula (I): The groups are as defined as specification. The compound represented by formula (I) can be used in the prevention of plants diseases caused by a plurality of pathogenic bacteria such as oomycota, basidiomycota, ascomycota, and fungi imperfecti, and due to these compounds have good bioactivity, which make them have very good effects at very low doses, especially more effective to powdery mildew of wheat. Therefore, the present invention relates to the use of the compounds having general formula I as fungicides, both in agriculture and other fields.

No. of Pages : 37 No. of Claims : 8

(12) PATENT APPLICATION PUBLICATION
(19) INDIA
(22) Date of filing of Application :16/03/2011
(21) Application No.740/MUM/2011 A
(43) Publication Date : 14/03/2014

(54) Title of the invention : SOLAR ENERGY DRYER

(51) International classification	:F26B21/00, F26B9/06
(31) Priority Document No	:NA
(32) Priority Date	:NA
(33) Name of priority country	:NA
(86) International Application No	:NA
Filing Date	:NA
(87) International Publication No	: NA
(61) Patent of Addition to Application Number	:NA
Filing Date	:NA
(62) Divisional to Application Number	:NA
Filing Date	:NA

(71)**Name of Applicant :**
1)INSTITUTE OF CHEMICAL TECHNOLOGY
Address of Applicant :ICT, NATHALAL PAREKH MARG, MATUNGA, MUMBAI-400019, Maharashtra India
(72)**Name of Inventor :**
1)BHASKAR THORAT
2)VAIBHAV TIDKE
3)SWAPNIL KOKATE

(57) Abstract :
The present invention discloses a solar dryer for drying organic or inorganic material with controlled radiation. The dryer comprises a radiation absorbing heat conducting surface, and a convection channel formed by a radiation controlling cover over the conducting surface. The present invention uses the heat transfer modes of conduction, convection and radiation in the solar dyer which are not envisaged in the prior art.

No. of Pages : 12 No. of Claims : 10

(12) PATENT APPLICATION PUBLICATION
(19) INDIA
(22) Date of filing of Application :18/03/2011
(21) Application No.781/MUM/2011 A
(43) Publication Date : 14/03/2014

(54) Title of the invention : DRIVE SYSTEM FOR A VEHICLE

(51) International classification	:B62M11/14, B60W10/11, B60W20/00
(31) Priority Document No	:NA
(32) Priority Date	:NA
(33) Name of priority country	:NA
(86) International Application No	:NA
Filing Date	:NA
(87) International Publication No	: NA
(61) Patent of Addition to Application Number	:NA
Filing Date	:NA
(62) Divisional to Application Number	:NA
Filing Date	:NA

(71)**Name of Applicant :**
1)TATA MOTORS LIMITED
Address of Applicant :BOMBAY HOUSE, 24 HOMI MODY STREET, MUMBAI-400001, Maharashtra India
(72)**Name of Inventor :**
1)JANARDHANAN VENKATAPATHI

(57) Abstract :
An automated manual / automatic transmission with at least one planetary gear system, atleast one electric motor/generator & atleast one lock up clutch is described. In addition to operating the engine in its fuel efficient region, an efficient power transmission is also achieved. Other functions being start stop, braking energy recuperation, efficient launch & engine boost.

No. of Pages : 42 No. of Claims : 15

(12) PATENT APPLICATION PUBLICATION
(19) INDIA
(22) Date of filing of Application :18/03/2011

(21) Application No.782/MUM/2011 A
(43) Publication Date : 14/03/2014

(54) Title of the invention : METHODOLOGY FOR LAUNCHING A HYBRID VEHICLE AND A SYSTEM THEREOF

(51) International classification	:F16H 3/44, F16H 35/00	(71)**Name of Applicant :** **1)TATA MOTORS LIMITED** Address of Applicant :BOMBAY HOUSE, 24 HOMI MODY STREET, MUMBAI-400001, Maharashtra India
(31) Priority Document No	:NA	(72)**Name of Inventor :** **1)JANARDHANAN VENKATAPATHI**
(32) Priority Date	:NA	
(33) Name of priority country	:NA	
(86) International Application No	:NA	
Filing Date	:NA	
(87) International Publication No	: NA	
(61) Patent of Addition to Application Number	:NA	
Filing Date	:NA	
(62) Divisional to Application Number	:NA	
Filing Date	:NA	

(57) Abstract :
An automated manual / automatic transmission with at least one planetary gear system, at least one electric motor/generator and at least one lock up clutch is described. Launch of hybrid vehicle by engine and assisted by a motor-generator, needs speed regulation of the engine and the motor-generator for preventing damage to the system. In case of vehicle launch purely by means of a motor-generator, or purely by the engine or a combination of these in a hybrid drivetrain, various clutching elements are proposed.

No. of Pages : 21 No. of Claims : 9

(12) PATENT APPLICATION PUBLICATION
(19) INDIA
(22) Date of filing of Application :06/09/2012
(21) Application No.2580/MUM/2012 A
(43) Publication Date : 14/03/2014

(54) Title of the invention : A NOVEL METHOD FOR DETERMINING ELASTIC PROPERTIES OF SOILS

(51) International classification	:E02D1/02, E02D1/00, G01N33/24
(31) Priority Document No	:NA
(32) Priority Date	:NA
(33) Name of priority country	:NA
(86) International Application No	:NA
Filing Date	:NA
(87) International Publication No	: NA
(61) Patent of Addition to Application Number	:NA
Filing Date	:NA
(62) Divisional to Application Number	:NA
Filing Date	:NA

(71)**Name of Applicant :**
1)INDIAN INSTITUTE OF TECHNOLOGY, BOMBAY
Address of Applicant :INDIAN INSTITUTE OF TECHNOLOGY BOMBAY POWAI, MUMBAI-400076, Maharashtra India
(72)**Name of Inventor :**
1)DR.D N SINGH

(57) Abstract :
Elastic modulus and Poissons ratio of soils are two important parameters required for safe design of various civil engineering structures. The elastic modulus and shear modulus of the soils are generally obtained from the resonant column, torsional shear tests and geophysical methods. Though, from these parameters the Poissons ratio can be determined, these tests are quite elaborate, cumbersome, time consuming and require skilled manpower particularly for data interpretation. Moreover, direct determination of the Poissons ratio by employing micro-strain gauges, which measure axial and lateral strains using Wheatstone bridge circuits, is difficult for soils due to the problems associated with their fixing on the surface of the sample. Under these circumstances, application of piezoceramic elements, which can generate shear and compression waves, seems to be an excellent alternative. Using these wave velocities, the Poissons ratio can be computed easily and precisely. However, how this (computed) value of the Poissons ratio compares vis-a-vis that obtained from the conventional triaxial tests (i.e., strain controlled uniaxial compression tests), which yield stress-strain relationship, needs to be established. With this in view, investigations were conducted on soils of different types (clays and sands) in their disturbed and undisturbed forms by resorting to piezoceramic tests and the triaxial tests. Details of the methodology are presented in this paper and it has been demonstrated that application of piezoceramic elements yields the Poissons ratio and the elastic modulus of the soils quite easily, particularly for the soft clays and sands.

No. of Pages : 29 No. of Claims : 9

(12) PATENT APPLICATION PUBLICATION
(19) INDIA
(22) Date of filing of Application :04/03/2011
(21) Application No.611/MUM/2011 A
(43) Publication Date : 14/03/2014

(54) Title of the invention : SOLID LIPID NANOPARTICLES BASED FORMULATION OF ANTIFUNGAL AGENT AND PREPARATION METHOD THEREOF.

(51) International classification	:A61K9/51, A61K 47/00
(31) Priority Document No	:NA
(32) Priority Date	:NA
(33) Name of priority country	:NA
(86) International Application No	:NA
Filing Date	:NA
(87) International Publication No	:N/A
(61) Patent of Addition to Application Number	:NA
Filing Date	:NA
(62) Divisional to Application Number	:NA
Filing Date	:NA

(71)**Name of Applicant :**
1)VAVIA PRADEEP RATILAL
Address of Applicant :DEPARTMENT OF PHARMACEUTICAL SCIENCES AND TECHNOLOGY, INSTITUTE OF CHEMICAL TECHNOLOGY (DEEMED UNIVERSITY), NATHALAL PARIKH MARG, MATUNGA (EAST), MUMBAI 400 019, Maharashtra India
(72)**Name of Inventor :**
1)VAVIA PRADEEP RATILAL
2)WAVIKAR PREETI RAMESH

(57) Abstract :
Solid lipid nanoparticles are the spherical lipid particles in the size in the range of 5-1000 nm. It consists of a lipid core matrix in which the drug in encapsulated. The lipid phase is stabilized by using surfactants. Solid lipid nanoparticles combine the advantages of the other colloidal delivery systems like Microemulsions, nanoemulsions, liposomes, niososmes and polymeric nanoparticles and are introduced as an alternative to these delivery systems. The present invention provides compositions comprising solid lipid nanoparticles based gel of terbinafine hydrochloride. The said gel formulation comprising of at least one lipid component, at least one surfactant and at least one cosurfactant. The nanoparticles dispersion is incorporated into a gel to form a stable formulation. The solid lipid nanoparticles are prepared by melt emulsification method using high pressure homogenization technique. The nanoparticles may have a mean diameter, measured by photon correlation spectroscopy in the range of from about 50 nm to about 1000 nm. In the present embodiment, the pharmaceutical composition of terbinafine have enhanced skin deposition and improved antifungal activity.

No. of Pages : 24 No. of Claims : 10

(12) PATENT APPLICATION PUBLICATION
(19) INDIA
(22) Date of filing of Application :15/03/2011
(21) Application No.734/MUM/2011 A
(43) Publication Date : 14/03/2014

(54) Title of the invention : IMPROVED PROCESS FOR PREPARATION OF METHOXSALEN

(51) International classification	:A61K31/366, A61K31/565
(31) Priority Document No	:NA
(32) Priority Date	:NA
(33) Name of priority country	:NA
(86) International Application No	:NA
Filing Date	:NA
(87) International Publication No	:N//A
(61) Patent of Addition to Application Number	:NA
Filing Date	:NA
(62) Divisional to Application Number	:NA
Filing Date	:NA

(71)**Name of Applicant :**
1)WANBURY LIMITED
Address of Applicant :B-WING, 10TH FLOOR, BSEL TECH PARK, SECTOR 30 A, PLOT NO.39/5 & 39/5A, OPP. VASHI RAILWAY STATION, NAVI- MUMBAI- 400 703, Maharashtra India
(72)**Name of Inventor :**
1)CHAND, PREM
2)KADLAG, ASHOK KARBHARI
3)SANGANABHATLA, SHANKAR

(57) Abstract :
The present invention discloses an improved process for production of Methoxsalen wherein the stage of dehydrogenation of dihydroxanthotoxin is carried in presence of sodium acetate as chlorine scavenger to produce Methoxsalen substantially free of impurities of formula A and Formula B.

No. of Pages : 13 No. of Claims : 2

(12) PATENT APPLICATION PUBLICATION
(19) INDIA
(22) Date of filing of Application :14/01/2011
(21) Application No.133/MUM/2011 A
(43) Publication Date : 14/03/2014

(54) Title of the invention : POLYMORPHISM IN 5-AMINO-1-(2,6-DICHLORO-4-TRIFLUOROMETHYLPHENYL)-3-CYANO-4-TRIFLUORO METHYL SULFINYL PYRAZOLE

(51) International classification	:C07D 231/44
(31) Priority Document No	:NA
(32) Priority Date	:NA
(33) Name of priority country	:NA
(86) International Application No	:NA
Filing Date	:NA
(87) International Publication No	:N/A
(61) Patent of Addition to Application Number	:NA
Filing Date	:NA
(62) Divisional to Application Number	:NA
Filing Date	:NA

(71)**Name of Applicant :**
1)GHARDA KEKI HORMUSJI
Address of Applicant :GHARDA HOUSE, 48 HILL ROAD, BANDRA (WEST), MUMBAI 400 050, Maharashtra India
(72)**Name of Inventor :**
1)GHARDA KEKI HORMUSJI

(57) Abstract :
The present invention provides novel crystalline polymorphic forms of fipronil and processes for preparing the same. The present invention also provides a pesticidal composition containing a pesticidally effective amount of a crystalline form of fipronil and a method for controlling pests using a pesticidally effective amount of a crystalline form of fipronil or its composition.

No. of Pages : 35 No. of Claims : 14

(12) PATENT APPLICATION PUBLICATION
(19) INDIA
(22) Date of filing of Application :29/08/2012
(21) Application No.2520/MUM/2012 A
(43) Publication Date : 14/03/2014

(54) Title of the invention : NETWORK SEARCHING METHODS AND APPARATUSES FOR MULTI-MODE USER EQUIPMENT

(51) International classification :H04W36/00
(31) Priority Document No :201110258390.9
(32) Priority Date :02/09/2011
(33) Name of priority country :China
(86) International Application No :NA
Filing Date :NA
(87) International Publication No : NA
(61) Patent of Addition to Application Number :NA
Filing Date :NA
(62) Divisional to Application Number :NA
Filing Date :NA

(71)**Name of Applicant :**
1)MEDIATEK SINGAPORE PTE. LTD.
Address of Applicant :#03-01 SOLARIS NO. 1, FUSIONOPOLIS WALK, SINGAPORE 138628
(72)**Name of Inventor :**
1)ZENGYU HAO
2)JUNZHEN QIN
3)XINWEI CUI
4)CHAO-HSUN CHENG

(57) Abstract :
A network searching method for a multi-mode user equipment having a first radio access technology module and a second radio access technology module includes camping on a current cell by the user equipment via the first radio access technology module; obtaining information broadcast by a system of the second radio access technology module via the first radio access technology module when network environment corresponding to the first radio access technology module changes; and instructing the second radio access technology module to perform a network searching.

No. of Pages : 23 No. of Claims : 24

(12) PATENT APPLICATION PUBLICATION
(19) INDIA
(22) Date of filing of Application :13/02/2011
(21) Application No.2274/MUM/2010 A
(43) Publication Date : 14/03/2014

(54) Title of the invention : PH SENSITIVE LIPOSOMAL COMPOSITION OF PACLITAXEL FOR TREATMENT OF CANCER

(51) International classification	:A61K9/127, A61K31/337
(31) Priority Document No	:NA
(32) Priority Date	:NA
(33) Name of priority country	:NA
(86) International Application No	:NA
Filing Date	:NA
(87) International Publication No	: NA
(61) Patent of Addition to Application Number	:NA
Filing Date	:NA
(62) Divisional to Application Number	:NA
Filing Date	:NA

(71)**Name of Applicant :**
1)MRS. SMITA ICHCHHRAM RANE
Address of Applicant :SVKM'S NARSEE MONJEE INSTITUTE OF MANAGEMENT STUDIES(NMIMS) SCHOOL OF PHARMACY AND TECHNOLOGY MANAGEMENT, MUMBAI SHIRPUR CAMPUS, DIST-DHULE -425405 Maharashtra India
(72)**Name of Inventor :**
1)MS. SMITA ICHCHHRAM RANE
2)DR. MRS. BALA PRABHAKAR

(57) Abstract :
The present invention provides a sterile pH sensitive liposomal pharmaceutical composition comprising paclitaxel, one or more pharmaceutically acceptable phospholipids and sterol derivatives optionally along with pharmaceutically acceptable excipients, wherein the composition is devoid of polyethoxylated castor oil. The present invention provides process for preparing and method for treating the carcinomas using the aforesaid pharmaceutical composition.

No. of Pages : 22 No. of Claims : 10

(12) PATENT APPLICATION PUBLICATION
(19) INDIA
(22) Date of filing of Application :14/08/2012
(21) Application No.2364/MUM/2012 A
(43) Publication Date : 14/03/2014

(54) Title of the invention : MITIGATING FRAGMENT SPALL IN FRAGMENT PROJECTOR

(51) International classification	:G03B 21/14, G03B 21/00
(31) Priority Document No	:NA
(32) Priority Date	:NA
(33) Name of priority country	:NA
(86) International Application No	:NA
Filing Date	:NA
(87) International Publication No	: NA
(61) Patent of Addition to Application Number	:NA
Filing Date	:NA
(62) Divisional to Application Number	:NA
Filing Date	:NA

(71)**Name of Applicant :**
1)DIRECTOR GENERAL, DEFENCE RESEARCH & DEVELOPMENT ORGANIZATION(DRDO)
Address of Applicant :MINISTRY OF DEFENCE, GOVERNMENT OF INDIA, ROOM NO.348, B - WING, DRDO BHAVAN, RAJAJI MARG, NEW DELHI, 110 105, INDIA.
(72)**Name of Inventor :**
1)DHOTE KUSUMKANT D
2)VERMA PARAS N
3)P S MURTHY KROTHAPALLI

(57) Abstract :
A directional fragment projector includes a hollow casing, a booster pellet, a fragment matrix disc, explosive charge, closing means, etc. The casing has its rear end closed by closing means and the front end closed by fragment matrix disc. The interior of the casing is packed with explosive material. The booster pellet centrally disposed in the closing means triggers explosion of explosive material. The fragment matrix disc includes a plurality of closely packed fragments on a thin metal disc. The layer of resin - hardener-iron powder mix is applied over the free surface of fragments in the fragment matrix disc. Further, the second metal disc/top disc is disposed over the layer of resin- hardener-iron powder mix and this arrangement in its totality constitutes the fragment matrix disc, wherein the layer of resin- hardener-iron powder mix and the top disc sequentially disposed over the fragments free surface suppresses fragment spallation.

No. of Pages : 34 No. of Claims : 11

(12) PATENT APPLICATION PUBLICATION
(19) INDIA
(22) Date of filing of Application :29/10/2010
(21) Application No.3001/MUM/2010 A
(43) Publication Date : 14/03/2014

(54) Title of the invention : PROCESS EQUIPMENT AND TECHNOLOGY FOR SEPARATION OF BIOCHEMICALS FROM VARIOUS SOURCES

(51) International classification	:B01D15/20, B01D57/02
(31) Priority Document No	:NA
(32) Priority Date	:NA
(33) Name of priority country	:NA
(86) International Application No	:NA
Filing Date	:NA
(87) International Publication No	: NA
(61) Patent of Addition to Application Number	:NA
Filing Date	:NA
(62) Divisional to Application Number	:NA
Filing Date	:NA

(71)**Name of Applicant :**
1)VIJAYKUMAR LAXMAN DHADGE
Address of Applicant :AT & POST : CHANDA, TAL:NEWASA, DISTRICT : AHMEDNAGAR, 414 606 Maharashtra India
(72)**Name of Inventor :**
1)VIJAYKUMAR LAXMAN DHADGE

(57) Abstract :
The present invention describes the process equipment and technology for the separation, purification and concentration of biochemicals from plant source of any type. This method comprises feeding the plant source material to extraction using suitable solvent for a sufficient period of time to extract desirable compounds. The extracted plant product is filtered and further submitted to membrane process equipment for desirable biochemicals separation.

No. of Pages : 16 No. of Claims : 10

(12) PATENT APPLICATION PUBLICATION
(19) INDIA
(22) Date of filing of Application :02/02/2011
(21) Application No.301/MUM/2011 A
(43) Publication Date : 14/03/2014

(54) Title of the invention : CYCLIC SHORT CHAIN PEPTIDES

(51) International classification	:A61K38/29, C07K14/635
(31) Priority Document No	:NA
(32) Priority Date	:NA
(33) Name of priority country	:NA
(86) International Application No	:NA
Filing Date	:NA
(87) International Publication No	:N/A
(61) Patent of Addition to Application Number	:NA
Filing Date	:NA
(62) Divisional to Application Number	:NA
Filing Date	:NA

(71)**Name of Applicant :**
1)CADILA HEALTHCARE LIMITED
Address of Applicant :ZYDUS TOWER, SATELLITE CROSS ROAD, AHMEDABAD - 380 015, GUJARAT, INDIA.
(72)**Name of Inventor :**
1)BAHEKAR RAJESH H.
2)PRAJAPATI VIJAY
3)JAIN MUKUL
4)PATEL PANKAJ

(57) Abstract :
The present invention provides novel cyclic short-chain peptideshaving pharmaceutical!)/ beneficial properties. The invention also provides a process for preparing such short chain peptides and pharmaceutical compositions containing the cyclic peptides of the present invention.

No. of Pages : 68 No. of Claims : 18

(12) PATENT APPLICATION PUBLICATION
(19) INDIA
(22) Date of filing of Application :11/01/2013
(21) Application No.107/MUMNP/2013 A
(43) Publication Date : 14/03/2014

(54) Title of the invention : FOAM ENHANCEMENT OF FATTY ACYL GLYCINATE SURFACTANTS

(51) International classification	:A61Q 5/02 ,A61K 8/04
(31) Priority Document No	:12/834061
(32) Priority Date	:12/07/2010
(33) Name of priority country	:U.S.A.
(86) International Application No	:PCT/EP2011/061185
Filing Date	:04/07/2011
(87) International Publication No	:WO 2012/007301
(61) Patent of Addition to Application Number	:NA
Filing Date	:NA
(62) Divisional to Application Number	:NA
Filing Date	:NA

(71)**Name of Applicant :**
1)HINDUSTAN UNILEVER LIMITED
Address of Applicant :Unilever House B.D. Sawant Marg Chakala Andheri East Mumbai 400 099 Maharashtra India
(72)**Name of Inventor :**
1)DASGUPTA Bivash Ranjan
2)SINGH Prabhjyot
3)ANANTHAPADMANABHAN Kavssery Parameswaran
4)CHANDAR Prem

(57) Abstract :
A personal care cleansing composition is provided which includes a C10-C24 acyl glycinate salt and a dihydrox-ypropyl quaternary ammonium salt. Most preferred is sodium cocoyl glycinate in combination with dihydroxypropyl trimethyl ammonium chloride. The quaternary ammonium salt enhances foaming properties of the glycinate salt.

No. of Pages : 18 No. of Claims : 9

(12) PATENT APPLICATION PUBLICATION
(19) INDIA
(22) Date of filing of Application :10/09/2012
(21) Application No.2616/MUM/2012 A
(43) Publication Date : 14/03/2014

(54) Title of the invention : DISENTANGLED ULTRA HIGH MOLECULAR WEIGHT POLYETHYLENE GRAFT CO-POLYMERS AND A PROCESS FOR PREPARATION THEREOF

(51) International classification	:B29C67/24, B29C43/00
(31) Priority Document No	:NA
(32) Priority Date	:NA
(33) Name of priority country	:NA
(86) International Application No	:NA
Filing Date	:NA
(87) International Publication No	: NA
(61) Patent of Addition to Application Number	:NA
Filing Date	:NA
(62) Divisional to Application Number	:NA
Filing Date	:NA

(71)**Name of Applicant :**
1)RELIANCE INDUSTRIES LIMITED
Address of Applicant :MAKER CHAMBER IV, NARIMAN POINT, MUMBAI - 400 021, Maharashtra India
(72)**Name of Inventor :**
1)GANDHAM SATYA SRINIVASA RAO
2)MATHUR AJIT BEHARI
3)SATPATHY UMA SANKAR
4)SARMA KRISHNA RENGANATH
5)JASRA RAKSH VIR

(57) Abstract :
In accordance with the present disclosure, there is provided a solid state graft copolymerization process for the preparation of disentangled ultrahigh molecular weight polyethylene graft copolymers in which disentangled ultrahigh molecular weight polyethylene is admixed with at least one functional monomer and a free radical initiator to obtain a mixture; and the mixture thus obtained is subjected to solid state polymerization to obtain a graft copolymer of disentangled ultrahigh molecular weight polyethylene. The graft copolymers of disentangled ultrahigh molecular weight polyethylene shows better crystallization temperature that ranges between 117°C to 121 °C and improved decomposition temperature (Tioo) that ranges between 460°C to 480°C.

No. of Pages : 35 No. of Claims : 15

(12) PATENT APPLICATION PUBLICATION
(19) INDIA
(22) Date of filing of Application :07/09/2009
(21) Application No.2044/MUM/2009 A
(43) Publication Date : 14/03/2014

(54) Title of the invention : GENERATION OF WIND ENERGY THROUGH LINEAR MOTION BY USING TURBO CHARGERS AND TURBINE MACHINE

(51) International classification	:F03D9/00, F03G4/00
(31) Priority Document No	:NA
(32) Priority Date	:NA
(33) Name of priority country	:NA
(86) International Application No	:NA
Filing Date	:NA
(87) International Publication No	:N/A
(61) Patent of Addition to Application Number	:NA
Filing Date	:NA
(62) Divisional to Application Number	:NA
Filing Date	:NA

(71)**Name of Applicant :**
1)SANTOSH ARVIND PRADHAN
Address of Applicant :ARUNODAYA, PLOT NO.51, PIONEER HOUSING SOCIETY, SWAWLAMBI NAGAR, NAGPUR 440 025 Maharashtra India
(72)**Name of Inventor :**
1)SANTOSH ARVIND PRADHAN

(57) Abstract :
A mechanism which is useful for making clean and environment friendly generation of electricity is disclosed. The Turbo charger driven machine 11 is placed at the top of the Railway passenger bogie 3 for the generation of high pressurized Air. Galvanized reinforcement structure 8 and Turbo charger driven Air generating machine 7 is placed along the Railway track 1 to generate the Air and subsequently it is being collected in M.S.tanks 15 and later on with the help of Air and Turbine machine 16 electricity is being made.

No. of Pages : 27 No. of Claims : 43

(12) PATENT APPLICATION PUBLICATION
(19) INDIA
(22) Date of filing of Application :07/09/2009
(21) Application No.2045/MUM/2009 A
(43) Publication Date : 14/03/2014

(54) Title of the invention : GENERATION OF WIND ENERGY THROUGH LINEAR MOTION BY USING TURBO CHARGERS AND AIR MOTOR

(51) International classification	:F03D9/00, F03G4/00
(31) Priority Document No	:NA
(32) Priority Date	:NA
(33) Name of priority country	:NA
(86) International Application No	:NA
Filing Date	:NA
(87) International Publication No	:N/A
(61) Patent of Addition to Application Number	:NA
Filing Date	:NA
(62) Divisional to Application Number	:NA
Filing Date	:NA

(71)**Name of Applicant :**
1)SANTOSH ARVIND PRADHAN
Address of Applicant :ARUNODAYA, PLOT NO.51, PIONEER HOUSING SOCIETY, SWAWLAMBI NAGAR, NAGPUR 440 025 Maharashtra India
(72)**Name of Inventor :**
1)SANTOSH ARVIND PRADHAN

(57) Abstract :
A mechanism which is useful for making clean and environment friendly generation of electricity is disclosed. The Turbo charger driven machine 11 is placed at the top of the Railway passenger bogie 3 for the generation of high pressurized Air. Galvanized reinforcement structure 8 and Turbo charger driven Air generating machine 7 is placed along the Railway track 1 to generate the Air and subsequently it is being collected in M.S.tanks 15 and later on with the help of Air and Air motor 16, electricity is being made.

No. of Pages : 27 No. of Claims : 43

(12) PATENT APPLICATION PUBLICATION
(19) INDIA
(22) Date of filing of Application :28/08/2012
(21) Application No.2500/MUM/2012 A
(43) Publication Date : 14/03/2014

(54) Title of the invention : MANAGING CHANGE REQUESTS OF SOFTWARE APPLICATIONS

(51) International classification	:G06F9/44, G06F17/30, G06Q10/00
(31) Priority Document No	:NA
(32) Priority Date	:NA
(33) Name of priority country	:NA
(86) International Application No	:NA
Filing Date	:NA
(87) International Publication No	: NA
(61) Patent of Addition to Application Number	:NA
Filing Date	:NA
(62) Divisional to Application Number	:NA
Filing Date	:NA

(71)**Name of Applicant :**
1)TATA CONSULTANCY SERVICES LIMITED
Address of Applicant :Nirmal Building 9th Floor Nariman Point Mumbai 400021 Maharashtra India
(72)**Name of Inventor :**
1)Sinha Arnab
2)Saxena Vaibhav
3)Balakrishnan Anandaganesh
4)Kazim Saiyid Mujtaba

(57) Abstract :
A system and method for managing one or more change requests associated with a software application are disclosed. The one or more change requests are indicative of modifications to be made in the software application. The method comprises performing impact analysis for the one or more change requests. Performing the impact analysis comprises comparing at least one of requirement descriptions associated with the one or more change requests components associated with the one or more change requests and scripts associated with the one or more change requests. The requirement descriptions the components and the scripts are stored in a change request database. Performing the impact analysis further comprises identifying one or more conflicting requirements associated with the one or more change requests based upon the comparison. The one or more conflicting requirements are indicative of inconsistency among requirements associated with the one or more change requests.

No. of Pages : 34 No. of Claims : 17

(12) PATENT APPLICATION PUBLICATION
(19) INDIA
(22) Date of filing of Application :13/01/2011
(21) Application No.112/CHE/2011 A
(43) Publication Date : 14/03/2014

(54) Title of the invention : OLANZAPINE PAMOATE PROCESS AND POLYMORPHS

(51) International classification :C07D
(31) Priority Document No :NA
(32) Priority Date :NA
(33) Name of priority country :NA
(86) International Application No :NA
Filing Date :NA
(87) International Publication No : NA
(61) Patent of Addition to Application Number :NA
Filing Date :NA
(62) Divisional to Application Number :NA
Filing Date :NA

(71)**Name of Applicant :**
1)Dr Reddys Laboratories Limited
Address of Applicant :Dr. Reddys Laboratories Limited 7-1-27 Ameerpet Hyderabad Andhra Pradesh India
2)Dr Reddys Laboratories Inc.
(72)**Name of Inventor :**
1)Srinivasulu Rangineni
2)Arjun Kumar Tummala

(57) Abstract :
The present application provides processes for the preparation of olanzapine pamoate, amorphous form of olanzapine pamoate and processes for its preparation. Also provides processes for the purification of pamoic acid.

No. of Pages : 29 No. of Claims : 5

(12) PATENT APPLICATION PUBLICATION
(19) INDIA
(22) Date of filing of Application :07/09/2012
(21) Application No.3705/CHE/2012 A
(43) Publication Date : 14/03/2014

(54) Title of the invention : COCONUT HARVESTER

(51) International classification :A23N5/00
(31) Priority Document No :NA
(32) Priority Date :NA
(33) Name of priority country :NA
(86) International Application No :NA
Filing Date :NA
(87) International Publication No : NA
(61) Patent of Addition to Application Number :NA
Filing Date :NA
(62) Divisional to Application Number :NA
Filing Date :NA

(71)**Name of Applicant :**
1)M S RAMAIAH SCHOOL OF ADVANCED STUDIES
Address of Applicant :#470-P, PEENYA INDUSTRIAL AREA, 4TH PHASE, BANGALORE - 560 058 Karnataka India
(72)**Name of Inventor :**
1)DR. S. R SHANKAPAL

(57) Abstract :
Coconut plucking is become a major role due to lack of labors in the required region. The main objective of the present work is to design a machine used to climb a coconut tree to pluck coconuts and cutting bushy heads. The machine has two divisions one being the climber assembly and second being the cutter assembly. The climber part of the machine climbs the tree to the required height which is controlled by the motor linked to the wheels. The cutter assembly is fixed on the climber frame which carries the cutter to the required height and position the cutter to the required angle for cutting the coconuts or trimming the palm fronds. The demand for such machines is increasing with various designs being tried to improve the efficiency and to decrease the weight of the machine.
Note: Repeat boxes in case of more than one entry To be signed by the applicant(s)or the authorized registered patent agent Name of the applicant should be given in full, family name in the beginning Complete address of the applicant should be given stating with postal index no. / code, state and country Strike out the column which is/are not applicable

No. of Pages : 7 No. of Claims : 3

(12) PATENT APPLICATION PUBLICATION
(19) INDIA
(22) Date of filing of Application :07/09/2012
(21) Application No.3706/CHE/2012 A
(43) Publication Date : 14/03/2014

(54) Title of the invention : AUTOMATIVE WING MIRROR FOR A CAR

(51) International classification :B60R1/00
(31) Priority Document No :NA
(32) Priority Date :NA
(33) Name of priority country :NA
(86) International Application No :NA
Filing Date :NA
(87) International Publication No : NA
(61) Patent of Addition to Application Number :NA
Filing Date :NA
(62) Divisional to Application Number :NA
Filing Date :NA

(71)**Name of Applicant :**
1)M S RAMAIAH SCHOOL OF ADVANCED STUDIES
Address of Applicant :#470-P, PEENYA INDUSTRIAL AREA, 4TH PHASE, BANGALORE - 560 058 Karnataka India
(72)**Name of Inventor :**
1)MR. NAGARAJA. B
2)DR. S. R SHANKAPAL
3)DR. P CYRIL PRASANNA RAJ

(57) Abstract :
The main objective of this invention is the protection of side view mirrors of a car. In the present market there is damage of side view mirrors of cars in the urban region due to more traffic congestion. The concentrated market for such invention will be for any segment cars, to attach has a retrofit to the existing side view mirrors. The system which has features of closing and opening of the side view mirror of a car when an object is in line of collision to the mirror. When an object approaches the mirror at certain distance and if it is in line of collision to the mirror then the mirror automatically moves to closed position and again automatically opens if the object is moved away from the line of collision from the mirror. This system will be to minimize the damages of side view mirrors of cars.

No. of Pages : 6 No. of Claims : 2

(12) PATENT APPLICATION PUBLICATION
(19) INDIA
(22) Date of filing of Application :07/09/2012
(21) Application No.3709/CHE/2012 A
(43) Publication Date : 14/03/2014

(54) Title of the invention : ELECTROMAGNETIC BRAKING SYSTEM

(51) International classification :H02K7/00
(31) Priority Document No :NA
(32) Priority Date :NA
(33) Name of priority country :NA
(86) International Application No :NA
Filing Date :NA
(87) International Publication No : NA
(61) Patent of Addition to Application Number :NA
Filing Date :NA
(62) Divisional to Application Number :NA
Filing Date :NA

(71)**Name of Applicant :**
1)EESHAAN MANJUNAATH PATIL
Address of Applicant :NO. 18, 4TH CROSS, 8TH MAIN, CENTRAL EXCISE LAYOUT, VIJAYANAGAR, BANGALORE - 560 040 Karnataka India
2)VIKRAM KRISHNASWAMY
(72)**Name of Inventor :**
1)EESHAAN MANJUNAATH PATIL
2)VIKRAM KRISHNASWAMY

(57) Abstract :
An electromagnetic braking system is provided. The braking system comprises a shaft wherein a first end of the shaft is coupled to a rotor assembly. A permanent magnet is disposed on the first end of the shaft in proximity to the rotor assembly. A fixed coil assembly is disposed over the shaft wherein a first end of the fixed coil assembly is disposed in close proximity to the permanent magnet but not in contact with the permanent magnet. An actuator assembly is disposed on a second end of the shaft wherein the actuator assembly comprises a telescoping mechanism and a servo mechanism. The fixed coil assembly is disposed along the length of the shaft. The telescoping mechanism houses a means to bring a charged cell circuit comprising a charged cell and an empty cell circuit comprising an empty cell in contact with the fixed coil assembly. The permanent magnet, the telescoping mechanism and the fixed coil assembly are disposed co-axially over the shaft. In certain other embodiments a method of braking and a method of manufacturing the electromagnetic braking system are also provided.

No. of Pages : 27 No. of Claims : 10

(12) PATENT APPLICATION PUBLICATION
(19) INDIA
(22) Date of filing of Application :08/12/2009
(21) Application No.3020/CHE/2009 A
(43) Publication Date : 14/03/2014

(54) Title of the invention : PROCESS EQUIPMENT FOR REFRIGERATIONS TO REPLACE COMPRESSOR IN INDUSTRIAL REFRIGERATION PLANTS

(51) International classification :F25B
(31) Priority Document No :NA
(32) Priority Date :NA
(33) Name of priority country :NA
(86) International Application No :NA
Filing Date :NA
(87) International Publication No : NA
(61) Patent of Addition to Application Number :NA
Filing Date :NA
(62) Divisional to Application Number :NA
Filing Date :NA

(71)**Name of Applicant :**
1)AMBATI VENKATESWARA RAO
Address of Applicant :OPP. RAMALAYAM, UNGUTUR - 521 312, UNGUTUR MANDAL, KRISHNA DISTRICT Andhra Pradesh India
(72)**Name of Inventor :**
1)AMBATI VENKATESWARA RAO

(57) Abstract :
Refrigeration is a process of removing heat at low temperature level and rejecting it relatively at a higher temperature level. It requires external energy to make heat flow from low temperature level to high temperature level. Currently Ammonia compressor is being used to circulate the low temperature refrigerant vapour to high temperature level for carrying the heat from evaporator to condenser. This Ammonia compressor is consuming huge amount of power for carrying this refrigeration process in the existing ice plants, cold storages and dairy plants and contributing to the production costs upto 70% alone to the total production costs in the plants. The invention purpose is to save power and operational expenses of the Ammonia compressor in the existing plants by replacing Ammonia compressor with this invention. This invention of process equipment will use heat energy for it™s operation and saves entire power consumed by Ammonia compressor. This invention does not have any moving parts in its operation and saves operational and maintenance costs of the Ammonia compressor. This invention also improves production upto 30% from the same existing plant run by Ammonia compressor because, Ejetor pump will work at low pressures more efficiently than Ammonia compressor. By changing the circulation of refrigerant vapour method in the existing plants from mechanical pumping method by Ammonia compressor to ejector pumping system based on jet vacuum principle, we can save huge amount of power and production costs upto 70% in the existing refrigeration plants.

No. of Pages : 15 No. of Claims : 4

(12) PATENT APPLICATION PUBLICATION
(19) INDIA
(22) Date of filing of Application :10/09/2012
(21) Application No.3732/CHE/2012 A
(43) Publication Date : 14/03/2014

(54) Title of the invention : GRAPHENE BASED HYDROGEN STORAGE NANOMATERIAL

(51) International classification :B82Y30/00
(31) Priority Document No :NA
(32) Priority Date :NA
(33) Name of priority country :NA
(86) International Application No :NA
Filing Date :NA
(87) International Publication No : NA
(61) Patent of Addition to Application Number :NA
Filing Date :NA
(62) Divisional to Application Number :NA
Filing Date :NA

(71)**Name of Applicant :**
1)INDIAN INSTITUTE OF TECHNOLOY
Address of Applicant :IIT P.O., CHENNAI 600 036 Tamil Nadu India
(72)**Name of Inventor :**
1)DR. S. RAMAPRABHU
2)VINAYAN B.P.

(57) Abstract :
A method of manufacture of graphene based hydrogen storage material, that is transition metal decorated nitrogen doped graphene (TM/NG) hybrid material, for hydrogen storage applications comprising the steps of mixing 20 % to 50 % by weight of graphite oxide, transition metal precursor and 80 % to 50 % by weight of melamine in water medium and drying at 50 degree C to 60 degree C in a vacuum oven; keeping the resulting nanocomposite under focused sunlight using a convex lens, to obtain TM/NG hybrid material.

No. of Pages : 5 No. of Claims : 2

(12) PATENT APPLICATION PUBLICATION
(19) INDIA
(22) Date of filing of Application :10/09/2012
(21) Application No.3733/CHE/2012 A
(43) Publication Date : 14/03/2014

(54) Title of the invention : IRON OXIDE-GRAPHENE NANO COMPOSITE ELECTRODES FOR WATER PURIFICATION

(51) International classification :B82Y30/00
(31) Priority Document No :NA
(32) Priority Date :NA
(33) Name of priority country :NA
(86) International Application No :NA
Filing Date :NA
(87) International Publication No : NA
(61) Patent of Addition to Application Number :NA
Filing Date :NA
(62) Divisional to Application Number :NA
Filing Date :NA

(71)**Name of Applicant :**
1)INDIAN INSTITUTE OF TECHNOLOGY
Address of Applicant :IIT P.O., CHENNAI 600 036 Tamil Nadu India
(72)**Name of Inventor :**
1)DR. S. RAMAPRABHU
2)DR. ASHISH KUMAR MISHRA

(57) Abstract :
A method of manufacture of iron oxide-graphene nano composite for the manufacture of electrodes therefrom for water purification comprising the steps of preparing graphene sheets by hydrogen induced exfoliation of graphitic oxide; decorating the iron oxide nanocrystals[preparing graphitic oxide oxidation of pure graphite; further thermally exfoliating the graphitic oxide at 200 °C under hydrogen atmosphere to synthesize graphene sheets; treating the resulting hydrogen exfoliated graphene sheets (HEG) with concentrated HN03acid, resulting in the hydrophilic functional groups (-COOH, -C=O, and -OH) at the surface of HEG; washing the functionalized graphene sheets (f-HEG) several times with water to achieve pH=7 followed by drying; suspending the functionalized graphene (f-HEG) in de-ionized water by ultrasonication; dissolving FeCI3.6H2O and FeS04.7H2O in de-ionized water in the stoichiometric ratio of 3:2 and heating the resulting solution up to 90 °C; adding Ammonia solution (NH4OH-25%) and f-HEG dispersed solution, in the volumetric ratio of 1:5, to the above solution; stirring solution at 90 °C for 30 min followed by cooling to room temperature to obtain iron oxide-graphene (Fe3O4-f-HEG) nanocomposite as a black precipitate; filtering and washing the precipitate to neutral with water.

No. of Pages : 11 No. of Claims : 3

(12) PATENT APPLICATION PUBLICATION
(19) INDIA
(22) Date of filing of Application :13/01/2011
(21) Application No.109/CHE/2011 A
(43) Publication Date : 14/03/2014

(54) Title of the invention : METHOD OF EXTRACTING AND ALIGNING CURVILINEAR TEXT OF A CAPTURED IMAGE AND A SYSTEM THEREOF

(51) International classification	:G06T, G06K
(31) Priority Document No	:NA
(32) Priority Date	:NA
(33) Name of priority country	:NA
(86) International Application No	:NA
Filing Date	:NA
(87) International Publication No	: NA
(61) Patent of Addition to Application Number	:NA
Filing Date	:NA
(62) Divisional to Application Number	:NA
Filing Date	:NA

(71)**Name of Applicant :**
1)INDIAN INSTITUTE OF SCIENCE
Address of Applicant :Bangalore 560 012 Karnataka India
2)DEPARTMENT OF INFORMATION TECHNOLOGY
(72)**Name of Inventor :**
1)THOTREINGAM KASAR
2)A G RAMAKRISHNAN

(57) Abstract :
Embodiments of the disclosure relate to a method and system for extracting curved text lines of an image captured and aligning the text lines horizontally. By using the spatial regularity properties of text, adjacent components are grouped together to obtain the text lines present in the image. To align each of the identified text line, a B-spline curve is fitted to the centroids of the constituent characters. The orientations of the individual characters are computed from the normal vectors along the fitted curve. Each character is then rotated such that the corresponding normal vector is aligned with the vertical axis. The output image is generated by stacking the rotated characters in a left to right direction such that the spacing between the characters is proportional to the corresponding inter-character centroid distances.

No. of Pages : 26 No. of Claims : 14

(12) PATENT APPLICATION PUBLICATION
(19) INDIA
(22) Date of filing of Application :05/08/2011
(21) Application No.2691/CHE/2011 A
(43) Publication Date : 14/03/2014

(54) Title of the invention : AN IMPROVED PROCESS FOR THE PRODUCTION OF E.COLI COMPATIBLE MULTIFUNCTIONAL STAPHYLOKINASE VARIANT FOR EFFECTIVE THROMBOLYTIC THERAPY WITH REDUCED REOCCLUSION ACTIVITY

(51) International classification :C07K
(31) Priority Document No :NA
(32) Priority Date :NA
(33) Name of priority country :NA
(86) International Application No :NA
Filing Date :NA
(87) International Publication No : NA
(61) Patent of Addition to Application Number :NA
Filing Date :NA
(62) Divisional to Application Number :NA
Filing Date :NA

(71)**Name of Applicant :**
1)DR. KRISHNA KANTH PULICHERLA
Address of Applicant :PROF. & HEAD, DEPT. OF BIOTECHNOLOGY, R.V.R. & J.C. COLLEGE OF ENGINEERING, CHOWDAVARAM, GUNTUR - 522 019 Andhra Pradesh India
(72)**Name of Inventor :**
1)DR. KRISHNA KANTH PULICHERLA
2)MR. RAMA KRISHNA GVS
3)MR. ANMOL KUMAR
4)DR. KRS SAMBASIVA RAO

(57) Abstract :
The present invention relates to an improved process for production of fusion protein in high yield via salt inducible E.coli. More particularly, it provides an economically improved fed-batch fermentation process for the production and development of a staphylokinase (Sak) based bacterial friendly multifunctional recombinant protein variant combined with antithrombin and antiplatelet activities from a genetically engineered strain GJ1158 which can be used in the treatment of thromboembolic disorders with reduced reocclusion complication. The yield of the protein was obtained upto 5g/L by using fed batch fermentation. The obtained protein functionally characterized in vitro which revealed effectively inhibits the thrombin activity and platelet aggregation along with fibrinolytic activity. A multifunctional fusion protein, (staphylokinase (Sak) linked with tripeptide RGD and didecapeptide Hirulog (SRH)) was constructed to have Hirulog as an antithrombin agent and RGD (Arg-Gly-Asp) as an antiplatelet agent. This multifunctional fusion protein, SRH was expressed at high levels in GJ1158.

No. of Pages : 33 No. of Claims : 15

(12) PATENT APPLICATION PUBLICATION
(19) INDIA
(22) Date of filing of Application :05/08/2011
(21) Application No.2693/CHE/2011 A
(43) Publication Date : 14/03/2014

(54) Title of the invention : A PROCESS FOR PREPARATION OF MIVACURIUM CHLORIDE

(51) International classification :C01D
(31) Priority Document No :NA
(32) Priority Date :NA
(33) Name of priority country :NA
(86) International Application No :NA
Filing Date :NA
(87) International Publication No : NA
(61) Patent of Addition to Application Number :NA
Filing Date :NA
(62) Divisional to Application Number :NA
Filing Date :NA

(71)**Name of Applicant :**
1)SEQUENT SCIENTIFIC LIMITED
Address of Applicant :STAR-II, OPPOSITE TO INDIAN INSTITUTE OF MANAGEMENT, BILEKAHALLI, BANNERGHATTA ROAD, BANGALORE - 560 076 Karnataka India
(72)**Name of Inventor :**
1)MANJATHURU, MAHALINGA
2)NAYEKAR, ANIL NARAYAN
3)DERAMBALA, YOGEESH
4)GOWDA, DHARSHAN JAKKALI CHANDRE
5)VASUDEVA, PEJAKALA KAKRANNAYA
6)ARULMOLI, THANGAVEL

(57) Abstract :
The present invention discloses a novel, cost-effective process for preparation of [R-[R,R-(E)]]-2,2'-(l,8-dioxo-4-octene-l,8-diyl) bis(oxy-3,1 -propanediyl) bis(l ,2,3,4-tetrahydro-6,7-dimethoxy-2-methyl-1 -[(3,4,5-trimethoxyphenyl)- methyl] isoquinolinium) dichloride, commonly known as mivacurium chloride, which avoids the conversion of (E)-4-octene-l,8-dioic acid to its acid chloride and use of non-ionic polymeric adsorbent resin to get a highly pure product.

No. of Pages : 10 No. of Claims : 9

(12) PATENT APPLICATION PUBLICATION
(19) INDIA
(22) Date of filing of Application :10/09/2012
(21) Application No.3739/CHE/2012 A
(43) Publication Date : 14/03/2014

(54) Title of the invention : A METHOD AND DEVICE OF TRANSMITTING SHORT MESSAGE

(51) International classification :H04L
(31) Priority Document No :NA
(32) Priority Date :NA
(33) Name of priority country :NA
(86) International Application No :NA
Filing Date :NA
(87) International Publication No : NA
(61) Patent of Addition to Application Number :NA
Filing Date :NA
(62) Divisional to Application Number :NA
Filing Date :NA

(71)**Name of Applicant :**
1)HUAWEI TECHNOLOGIES INDIA PVT. LTD.
Address of Applicant :NO. 23, LEVEL 3&4 LEELA GALLERIA AIRPORT ROAD, BANGALORE 560 017 Karnataka India
(72)**Name of Inventor :**
1)KUMAR, BHASKAR
2)DHAKAR, GAGAN

(57) Abstract :
The embodiments of the present invention provide a method and device of transmitting short message, the method includes: receiving a short message from a message sender, wherein information of multiple source addresses and multiple destination addresses are comprised in the short message; acquiring multiple contents of the short message according to the information of multiple source addresses; sending the contents of the short message tocorresponding destination addresses. In this invention, different source addresses and destination addresses are combined in a short message; such that there is less protocol overhead and performance is improved.

No. of Pages : 35 No. of Claims : 20

(12) PATENT APPLICATION PUBLICATION
(19) INDIA
(22) Date of filing of Application :03/01/2011
(21) Application No.11/CHE/2011 A
(43) Publication Date : 14/03/2014

(54) Title of the invention : EPOTHILONE COMPOUND FORMULATIONS

(51) International classification :C07D
(31) Priority Document No :NA
(32) Priority Date :NA
(33) Name of priority country :NA
(86) International Application No :NA
Filing Date :NA
(87) International Publication No : NA
(61) Patent of Addition to Application Number :NA
Filing Date :NA
(62) Divisional to Application Number :NA
Filing Date :NA

(71)**Name of Applicant :**
1)Dr Reddy™s Laboratories Limited
Address of Applicant :7-1-27 Ameerpet Hyderabad Andhra Pradesh India
2)Dr.Reddy™s Laboratories Inc.
(72)**Name of Inventor :**
1)Kocherlakota Chandrasekhar
2)Singh Tarun
3)Banda Nagaraju
4)Vure Prasad
5)Mulupuru Aparna

(57) Abstract :
The present application relates to compositions for parenteral administration of epothilone or epothilone analogs.

No. of Pages : 30 No. of Claims : 10

(12) PATENT APPLICATION PUBLICATION
(19) INDIA
(22) Date of filing of Application :28/03/2012
(21) Application No.1200/CHE/2012 A
(43) Publication Date : 14/03/2014

(54) Title of the invention : CODEC-AGNOSTIC ON-THE-FLY ENCODING AND STREAMING OF VIDEO DATA IN A PEER-TO-PEER VIDEO SHARING ENVIRONMENT

(51) International classification :H04N
(31) Priority Document No :NA
(32) Priority Date :NA
(33) Name of priority country :NA
(86) International Application No :NA
Filing Date :NA
(87) International Publication No : NA
(61) Patent of Addition to Application Number :NA
Filing Date :NA
(62) Divisional to Application Number :NA
Filing Date :NA

(71)**Name of Applicant :**
1)QUIKAST TECHNOLOGIES PVT. LTD.
Address of Applicant :#49 13th Main HAL 3rd Stage Kodihalli BANGALORE 560008 Karnataka India
(72)**Name of Inventor :**
1)DAS Soumya
2)BISWAS Saptarshi

(57) Abstract :
The present invention provides a method and system for on-the-fly encoding and streaming of video data in a peer-to-peer video sharing environment. Suppose a user of a recipient device wishes to watch video data available with a source device or the user of the source device wishes to share the video data with the user of the recipient device. In this scenario, the source device determines format of video file corresponding to the requested video data and encodes the video data in a streaming friendly format. Substantially simultaneously, the source device starts streaming the already encoded portion of video data without waiting for entire video data to be encoded. The recipient device continuously receives the encoded portion of video data and instantaneously plays video corresponding to the received video data on a display screen while the remaining portion of video data is being encoded and streamed by the source device.

No. of Pages : 35 No. of Claims : 23

(12) PATENT APPLICATION PUBLICATION
(19) INDIA
(22) Date of filing of Application :05/03/2009
(21) Application No.1251/CHENP/2009 A
(43) Publication Date : 14/03/2014

(54) Title of the invention : SPEAKER DEVICE

(51) International classification	:H04R9/04, H04R9/02
(31) Priority Document No	:NA
(32) Priority Date	:NA
(33) Name of priority country	:NA
(86) International Application No	:PCT/JP2008/51197
Filing Date	:05/03/2009
(87) International Publication No	:WO/2009/095984
(61) Patent of Addition to Application Number	:NA
Filing Date	:NA
(62) Divisional to Application Number	:NA
Filing Date	:NA

(71)**Name of Applicant :**
1)PIONEER CORPORATION
Address of Applicant :1-1, SHIN-OGURA, SAIWAI-KU, KAWASAKI-SHI, KANAGAWA 212-0031 Japan
2)TOHOKU PIONEER CORPORATION
(72)**Name of Inventor :**
1)KOBAYASHI, HIROYUKI
2)HIKICHI, TOSHIHIRO
3)HORIGOME, MINORU
4)ABE, YASUHISA

(57) Abstract :
A flat speaker device capable of emitting loud reproduced sound with a relatively simple configuration is provided. The speaker device includes a diaphragm, a frame supporting the diaphragm vibratably in the vibration direction, a magnetic circuit disposed in the frame, and a driving member for driving the diaphragm. The driving member includes a voice coil movably disposed in a magnetic gap of the magnetic circuit, a driving part formed movably in a direction different from the vibration direction of the diaphragm, and an angle conversion and transmission part, one end of which is angle-variably joined to the driving part and another end of which is angle-variably joined to the diaphragm. The angle conversion and transmission part has rigidity and is obliquely disposed with respect to each of the vibration direction of the diaphragm and the moving direction of the driving part.

No. of Pages : 71 No. of Claims : 33

(12) PATENT APPLICATION PUBLICATION
(19) INDIA
(22) Date of filing of Application :17/01/2012
(21) Application No.192/CHE/2012 A
(43) Publication Date : 14/03/2014

(54) Title of the invention : AN INTELLIGENT MACHINE HUMAN INTERFACE (MHI) WITH A METHOD OF SPEECH COMMUNICATION

(51) International classification :G10L
(31) Priority Document No :NA
(32) Priority Date :NA
(33) Name of priority country :NA
(86) International Application No :NA
Filing Date :NA
(87) International Publication No : NA
(61) Patent of Addition to Application Number :NA
Filing Date :NA
(62) Divisional to Application Number :NA
Filing Date :NA

(71)**Name of Applicant :**
1)SCHNEIDER ELECTRIC INDUSTRIES SAS
Address of Applicant :35, RUE JOSEPH MONIER, F-92500 RUEIL MALMAISON France
(72)**Name of Inventor :**
1)VEERENDRA VASAMSETTY

(57) Abstract :
The invention discloses an intelligent machine human interface (MHI) for automatically speaking out machine information to users. The MHI (100) includes a user detection system (202) for detecting the users based on role descriptions, a database (204) for storing the role descriptions, a human machine interface (HMI) (206) for providing access to machine information intuitively based on the role descriptions of the users, and a voice control system (208) for speaking out the machine information automatically in users' own language. The voice control system includes an embedded text to speech unit for converting the text to human voice. Additionally the MHI includes a user recognition system (210) for discovering and a user identification system (212) for verifying authentication of the users.

No. of Pages : 15 No. of Claims : 14

(12) PATENT APPLICATION PUBLICATION
(19) INDIA
(22) Date of filing of Application :10/09/2012
(21) Application No.3741/CHE/2012 A
(43) Publication Date : 14/03/2014

(54) Title of the invention : TEMPERATURE-DEPENDENT AIR-FLOW RATE CONTROL DEVICE AND METHOD FOR INTERNAL COMBUSTION ENGINE OF MOTOR VEHICLE

(51) International classification :F02D
(31) Priority Document No :NA
(32) Priority Date :NA
(33) Name of priority country :NA
(86) International Application No :NA
Filing Date :NA
(87) International Publication No : NA
(61) Patent of Addition to Application Number :NA
Filing Date :NA
(62) Divisional to Application Number :NA
Filing Date :NA

(71)**Name of Applicant :**
1)BOSCH LIMITED
Address of Applicant :POST BOX NO 3000, HOSUR ROAD, ADUGODI, BANGALORE - 560 030 Karnataka India
2)ROBERT BOSCH GMBH
(72)**Name of Inventor :**
1)PRADEEP R
2)PRAMOD R

(57) Abstract :
A thermally-sensitive device (10) for controlling air-flow rate to an internal combustion engine of motor vehicle is disclosed. The device (10) comprises a housing (12) with a front plate (13) and a piston (14). The piston (14) has a continuous bore (16) extending from its head (18) till an end (20) of a piston rod (21). One or more springs (22) are coupled between one side of the piston head (18) and the front plate (13) of the housing (12). One or more thermally-sensitive elements (26) are coupled on the side of the piston head (18), which is not connected to the spring (22). The piston rod (21) is mechanically connected to a throttle flap (28). The piston rod (21) is adapted to vary the movement of the throttle flap (28) based on the engine ambient temperature. The device (10) further comprises a screw (30) inserted into the continuous bore (16) of through a hole in the front plate (13). The screw (30) is selectively coupled to the throttle flap (28) to vary the movement of the throttle flap (28).

No. of Pages : 11 No. of Claims : 15

(12) PATENT APPLICATION PUBLICATION
(19) INDIA
(22) Date of filing of Application :29/11/2012
(21) Application No.10041/CHENP/2012 A
(43) Publication Date : 14/03/2014

(54) Title of the invention : LOW PROFILE POWER CONVERSION SYSTEM FOR ROOFTOP PHOTOVOLTAIC POWER SYSTEMS

(51) International classification :H02M3/02
(31) Priority Document No :61/350300
(32) Priority Date :01/06/2010
(33) Name of priority country :U.S.A.
(86) International Application No :PCT/US2011/038450
Filing Date :27/05/2011
(87) International Publication No :WO 2011/153106
(61) Patent of Addition to Application Number :NA
Filing Date :NA
(62) Divisional to Application Number :NA
Filing Date :NA

(71)**Name of Applicant :**
1)THE REGENTS OF THE UNIVERSITY OF COLORADO A BODY CORPORATE
Address of Applicant :1800 Grand Street 8th Floor Denver CO 80203 U.S.A.
2)DOW GLOBAL TECHNOLOGIES LLC
(72)**Name of Inventor :**
1)ERICKSON Robert Warren Jr.
2)PISKLAK Stephen
3)PLUM Timothy

(57) Abstract :
The disclosed embodiments and principles provide a way to integrate high efficiency low profile power electronics with localized maximum power point tracking (MPPT) into a rooftop shingle based photovoltaic power system. DC DC power converters having a height or profile as low as ¼ inch for a 200W power output are able to be included in a building integrated photovoltaic (BIPV) roof shingle. The DC DC power converters increase the relatively low voltage produced by two rows of series connected photovoltaic shingles each including photovoltaic cells to a high voltage used by a DC AC inverter. For example DC DC power converter increases the voltage produced by two rows of series connected photovoltaic shingles from several tens of volts to approximately 400 volts. Thus the DC DC power converters provide a large voltage step up using a low profile and with very high efficiency.

No. of Pages : 35 No. of Claims : 5

(12) PATENT APPLICATION PUBLICATION
(19) INDIA
(22) Date of filing of Application :30/03/2009
(21) Application No.1764/CHENP/2009 A
(43) Publication Date : 14/03/2014

(54) Title of the invention : PHASED SMALL RNAS

(51) International classification	:C12N15/11, A01H5/00
(31) Priority Document No	:60/841,608
(32) Priority Date	:31/08/2006
(33) Name of priority country	:U.S.A.
(86) International Application No	:PCT/US2007/019283
Filing Date	:31/08/2007
(87) International Publication No	:WO/2008/027592 A2
(61) Patent of Addition to Application Number	:NA
Filing Date	:NA
(62) Divisional to Application Number	:NA
Filing Date	:NA

(71)**Name of Applicant :**
1)MONSANTO TECHNOLOGY, LLC
Address of Applicant :800 NORTH LINDBERGH BOULEVARD, ST. LOUIS, MO 63167 U.S.A.
(72)**Name of Inventor :**
1)ALLEN, EDWARDS
2)GUO, LIANG
3)HEISEL, SARA, E
4)IVASHUTA, SERGEY, I
5)ZHANG, YUANJI, I

(57) Abstract :
This invention discloses recombinant DNA constructs encoding phased small RNAs useful in regulating expression of one or more genes of interest. Also disclosed by this invention are transgenic plant cells, plants, and seeds containing a recombinant DNA construct of this invention

No. of Pages : 69 No. of Claims : 19

(12) PATENT APPLICATION PUBLICATION
(19) INDIA
(22) Date of filing of Application :12/05/2009
(21) Application No.2669/CHENP/2009 A
(43) Publication Date : 14/03/2014

(54) Title of the invention : HELICALLY-SHAPED DRUG DELIVERY SYSTEM

(51) International classification :A61K 9/00
(31) Priority Document No :6124377.0
(32) Priority Date :20/11/2006
(33) Name of priority country :EUROPEAN UNION
(86) International Application No :PCT/EP07/62514
Filing Date :19/11/2007
(87) International Publication No :WO 2008/61963 A2
(61) Patent of Addition to Application Number :NA
Filing Date :NA
(62) Divisional to Application Number :NA
Filing Date :NA

(71)**Name of Applicant :**
1)N.V.ORGANON
Address of Applicant :KLOOSTERSTRAAT 6, NL-5349 AB OSS, Netherlands
(72)**Name of Inventor :**
1)DRIANCOURT, MARC-ANTOINE,
2)DEGRAAFF, WOUTER,
3)BUTTAFOCO, LAURA,
4)PAYOT, FABRICE,
5)VEENSTRA, HARM,
6)VOSS, RENE,

(57) Abstract :
The present invention relates to a helically-shaped medicated veterinary system suitable for delivery of a drug to the vaginal cavity of a female non-human mammal and to a method of manufacture. The drug delivery system is helically- shaped and comprises a three layered polymer fibre. The polymer fibre comprises a polymer core, a polymer intermediate layer comprising a drug, and a polymer skin. The medicated system provides a controlled delivery of drug to the vaginal cavity of the mammal. The present invention also relates to a process of making the springs.

No. of Pages : 29 No. of Claims : 16

(12) PATENT APPLICATION PUBLICATION
(19) INDIA
(22) Date of filing of Application :13/09/2012
(21) Application No.3814/CHE/2012 A
(43) Publication Date : 14/03/2014

(54) Title of the invention : HARD AND STIFF DISPOSABLE PAPER PLATE BY USING CORRUGATION PAPER BOARD OR HONEY COMB PAPER BOARD

(51) International classification :B65D
(31) Priority Document No :NA
(32) Priority Date :NA
(33) Name of priority country :NA
(86) International Application No :NA
Filing Date :NA
(87) International Publication No : NA
(61) Patent of Addition to Application Number :NA
Filing Date :NA
(62) Divisional to Application Number :NA
Filing Date :NA

(71)**Name of Applicant :**
1)M.E. MOHAMMED RAFIQUE
Address of Applicant :C/O, MR. K.A. PRAKASH 1ST FLOOR, NO. 492, 4TH CROSS SAMPIGE ROAD, MALLESHWARAM, BANGALORE - 560 003 Karnataka India
2)M. MOHAMMED
(72)**Name of Inventor :**
1)M.E. MOHAMMED RAFIQUE
2)M. MOHAMMED

(57) Abstract :
Disclosed is a Hard and Stiff Paper Plate, which can withstand the weight of upto 1 Kg of materials on it, capable of using for various purposes.

No. of Pages : 16 No. of Claims : 6

(12) PATENT APPLICATION PUBLICATION
(19) INDIA
(22) Date of filing of Application :13/09/2012
(21) Application No.3815/CHE/2012 A
(43) Publication Date : 14/03/2014

(54) Title of the invention : AN IMPROVED PROCESS FOR THE PREPARATION OF AMORPHOUS VILAZODONE HYDROCHLORIDE

(51) International classification :A61K9/00
(31) Priority Document No :NA
(32) Priority Date :NA
(33) Name of priority country :NA
(86) International Application No :NA
Filing Date :NA
(87) International Publication No : NA
(61) Patent of Addition to Application Number :NA
Filing Date :NA
(62) Divisional to Application Number :NA
Filing Date :NA

(71)**Name of Applicant :**
1)MYLAN LABORATORIES LTD
Address of Applicant :PLOT NO 564/A/22, ROAD NO 92, JUBILEE HILLS, HYDERABAD - 500 033 Andhra Pradesh India
(72)**Name of Inventor :**
1)JETTI, RAMAKOTESWARA RAO
2)GORANTLA, ASHA RANI
3)BEERAVELLI, SATISH
4)NEELIMA BHAGAVATULA

(57) Abstract :
The present invention relates to an improved process for the preparation of amorphous Vilazodone hydrochloride. The present invention further relates to process for the preparation of Vilazodone hydrochloride solid dispersion.

No. of Pages : 23 No. of Claims : 13

(12) PATENT APPLICATION PUBLICATION
(19) INDIA
(22) Date of filing of Application :13/09/2012
(21) Application No.3817/CHE/2012 A
(43) Publication Date : 14/03/2014

(54) Title of the invention : SEAT ASSEMBLY AND METHOD OF MANUFACTURING THE SAME

(51) International classification :B60R
(31) Priority Document No :NA
(32) Priority Date :NA
(33) Name of priority country :NA
(86) International Application No :NA
Filing Date :NA
(87) International Publication No : NA
(61) Patent of Addition to Application Number :NA
Filing Date :NA
(62) Divisional to Application Number :NA
Filing Date :NA

(71)**Name of Applicant :**
1)TVS MOTOR COMPANY LIMITED
Address of Applicant :JAYALAKSHMI ESTATES NO.29 (OLD NO.8) HADDOWS ROAD, CHENNAI 600 006 Tamil Nadu India
2)HARITA FEHRER LIMITED
(72)**Name of Inventor :**
1)KOTHANDAPANI MOHAN
2)CHANDAN BANSILAL CHAVAN
3)NARSIMHAN SRIVENKATA SUBRAMANIAN
4)RAMALINGAM KARTHIKEYAN
5)PACHAIYAPPAN RENGASAMY
6)SRINIVASAN ANAND
7)RAYAPPAN ASHOK

(57) Abstract :
Present disclosure provides a seat assembly with a cooling element having cooling and damper characteristics. Mentioned cooling element is moulded with the seat foam or the seat cover at one or more locations such that heat absorbed by seat foam does not affect rider skin directly. Said cooling element can also be stitched or pressed with the seat cover if required. This cooling element may or may not be exposed to the environment and hence facilitate a heat less ride for the vehicle user.

No. of Pages : 14 No. of Claims : 11

(12) PATENT APPLICATION PUBLICATION
(19) INDIA
(22) Date of filing of Application :02/02/2012
(21) Application No.1067/CHENP/2012 A
(43) Publication Date : 14/03/2014

(54) Title of the invention : REFRIGERATOR

(51) International classification	:F25D23/00, B05B5/057
(31) Priority Document No	:2009-194951
(32) Priority Date	:26/08/2009
(33) Name of priority country	:Japan
(86) International Application No	:PCT/JP2010/005250
Filing Date	:26/08/2010
(87) International Publication No	:WO 2011/024454
(61) Patent of Addition to Application Number	:NA
Filing Date	:NA
(62) Divisional to Application Number	:NA
Filing Date	:NA

(71)**Name of Applicant :**
1)PANASONIC CORPORATION
Address of Applicant :1006, OAZA KADOMA, KADOMA-SHI, OSAKA 571-8501 Japan
(72)**Name of Inventor :**
1)UEDA
2)YOSHIHIRO
3)KAMISAKO
4)TOYOSHI
5)KAKITA
6)KENICHI
7)OKUBO
8)KUMIKO
9)ISHITA
10)MITOKO

(57) Abstract :
In a storage compartment (124), storage spaces having different mist concentrations are formed such that effects of a mist is more efficiently utilized to provide a refrigerator with improved usability. The storage compartment (124) includes a first storage unit (164) that has a high mist concentration. The first storage unit (164) includes a spray device (167) and is disposed in a position outside an air path of cool air between a discharge port (152) through which the cool air flows in from outside the storage compartment (124) and a suction port (149) through which the cool air is discharged to outside the storage compartment (124). Thus, mist concentration inside the first storage unit (164) can be increased.

No. of Pages : 47 No. of Claims : 8

(12) PATENT APPLICATION PUBLICATION
(19) INDIA
(22) Date of filing of Application :20/04/2009
(21) Application No.2123/CHENP/2009 A
(43) Publication Date : 14/03/2014

(54) Title of the invention : 2-[1-PHENYL-5-HYDROXY OR METHOXY-4ALPHA-METHYL-HEXAHYDROCLOPENTA[F]INDAZOL-5-YL]ETHYL PHENYL DERIVATIVES AS GLUCOCORTICOID RECEPTOR LIGANDS

(51) International classification	:C07D231/56, A61K31/416
(31) Priority Document No	:60/853,655
(32) Priority Date	:23/10/2006
(33) Name of priority country	:U.S.A.
(86) International Application No	:PCT/US2007/022463
Filing Date	:23/10/2007
(87) International Publication No	:WO/2008/051532
(61) Patent of Addition to Application Number	:NA
Filing Date	:NA
(62) Divisional to Application Number	:NA
Filing Date	:NA

(71)**Name of Applicant :**
1)MERCK SHARP & DOHME CORP.
Address of Applicant :126 EAST LINCOLN AVENUE, RAHWAY, NJ 07065-0907 U.S.A.
(72)**Name of Inventor :**
1)BUNGARD, CHRISTOPHER, J
2)MANIKOWSKI, JESSE, J
3)PERKINS, JAMES, J
4)MEISSNER, ROBERT

(57) Abstract :
The present invention is directed to 2- [l-phenyl-5 -hydroxy or methoxy-4alpha- methyl-hexahydrocyclopenta[f]indazol-5-yl]ethyl phenyl derivatives of formula I (I) as glucocorticoid receptor ligands useful for treating a variety of autoimmune and inflammatory diseases or conditions. Pharmaceutical compositions and methods of use are also included.

No. of Pages : 154 No. of Claims : 23

(12) PATENT APPLICATION PUBLICATION
(19) INDIA
(22) Date of filing of Application :31/12/2007
(21) Application No.3157/CHE/2007 A
(43) Publication Date : 14/03/2014

(54) Title of the invention : A REMOTE CONTROL SYSTEM AND METHOD FOR A POWER SYSTEM SWITCHING SIMULATOR

(51) International classification :G06F
(31) Priority Document No :NA
(32) Priority Date :NA
(33) Name of priority country :NA
(86) International Application No :NA
Filing Date :NA
(87) International Publication No : NA
(61) Patent of Addition to Application Number :NA
Filing Date :NA
(62) Divisional to Application Number :NA
Filing Date :NA

(71)**Name of Applicant :**
1)LARSEN & TOUBRO LIMITED
Address of Applicant :KIADB INDUSTRIAL AREA, HEBBAL-HOOTAGALLI, MYSORE - 570 018 Karnataka India
(72)**Name of Inventor :**
1)NUTAN SHARMA
2)RAJENDRA KUMAR GUPTA

(57) Abstract :
Provided herein an automatic power switching system, said system comprises a power switching system having parameters associated for its functioning, a computing system having graphical user interface to monitor and input data associated to the parameters, a log file integrated to the computing system to collect and store the data and a communication channel enabling communication between the power switching system and the computing system thereby managing the power switching system remotely and effectively.

No. of Pages : 13 No. of Claims : 8

(12) PATENT APPLICATION PUBLICATION
(19) INDIA
(22) Date of filing of Application :08/07/2009
(21) Application No.4024/CHENP/2009 A
(43) Publication Date : 14/03/2014

(54) Title of the invention : LONG LIFETIME PHOSPHORESCENT ORGANIC LIGHT EMITTING DEVICE (OLED) STRUCTURES

(51) International classification :H01L51/50
(31) Priority Document No :60/877,696
(32) Priority Date :28/12/2006
(33) Name of priority country :U.S.A.
(86) International Application No :PCT/IB2007/004687
Filing Date :28/12/2007
(87) International Publication No :WO 2009/030981 A2
(61) Patent of Addition to Application Number :NA
Filing Date :NA
(62) Divisional to Application Number :NA
Filing Date :NA

(71)**Name of Applicant :**
1)UNIVERSAL DISPLAY CORPORATION
Address of Applicant :375 PHILLIPS BOULEVARD, EWING, NJ 08618 U.S.A.
(72)**Name of Inventor :**
1)ADAMOVICH, VADIM
2)WEAVER, MICHAEL, STUART
3)D'ANDRADE,BRIAN

(57) Abstract :
An organic light emitting device is provided having an emissive layer with an internal interface. The concentration of a second phosphorescent material in a second organic layer is different from the concentration of a first phosphorescent material in a first organic layer, creating the interface. The materials in the first and second organic layers may be the same or different. In addition to this interface within the emissive layer, the device has one or more features designed to mitigate failure mechanisms which may be associated with electrons or excitons passing from the cathode through the emissive layer to damage organic layers on the anode side of the emissive layer. In addition, devices are provided having an interface within the emissive layer as described above, and a lower energy emissive material on at least one side of the interface.

No. of Pages : 136 No. of Claims : 73

(12) PATENT APPLICATION PUBLICATION
(19) INDIA
(22) Date of filing of Application :14/07/2009
(21) Application No.4135/CHENP/2009 A
(43) Publication Date : 14/03/2014

(54) Title of the invention : MOBILE DEVICE MANAGEMENT PROXY SYSTEM

(51) International classification :H04Q7/24
(31) Priority Document No :11/698,639
(32) Priority Date :26/01/2007
(33) Name of priority country :U.S.A.
(86) International Application No :PCT/US2007/088919
Filing Date :27/12/2007
(87) International Publication No :WO 2008/091472
(61) Patent of Addition to Application Number :NA
Filing Date :NA
(62) Divisional to Application Number :NA
Filing Date :NA

(71)**Name of Applicant :**
1)MICROSOFT CORPORATION.,
Address of Applicant :ONE MICROSOFT WAY, REDMOND, WASHINGTON 98052-6399 U.S.A.
(72)**Name of Inventor :**
1)HERZOG, SHAI
2)HAGMAN, MARIE
3)DEEM, MICHAEL E.
4)TEPORDEI, BOGDAN M.,

(57) Abstract :
A general-purpose proxy mobile device management architecture. The architecture serves as a proxy for a mobile client seeking services from backend systems. A virtual client image of state information associated with the mobile client is stored such that when the mobile client interacts with the proxy, the virtual image updates to the latest client state. Based on the changes to the state, the proxy system asynchronously accesses one or more arbitrary services of the backend systems on behalf of the mobile client. When the mobile client connects to the proxy, the proxy will have the latest services associated with the states of the virtual image, and updates the state of the mobile client. Updating and accessing occurs asynchronously on the frontend between the proxy and mobile devices and on the backend between the proxy and the backend systems.

No. of Pages : 37 No. of Claims : 20

(12) PATENT APPLICATION PUBLICATION
(19) INDIA
(22) Date of filing of Application :08/04/2009
(21) Application No.1927/CHENP/2009 A
(43) Publication Date : 14/03/2014

(54) Title of the invention : WINDOW WIPER SYSTEM WITH A WINDOW WIPER DRIVE, IN PARTICULAR FOR A REAR WINDOW WIPER OF A MOTOR VEHICLE WITH A GEAR ARRANGEMENT WHICH CAN BE EXCHANGED IN A MODULAR MANNER

(51) International classification :B60S 1/16
(31) Priority Document No :10 2006 042 322.4
(32) Priority Date :08/09/2006
(33) Name of priority country :Germany
(86) International Application No :PCT/EP2007/057139
Filing Date :12/07/2007
(87) International Publication No :WO 2008/028710 A1
(61) Patent of Addition to Application Number :NA
Filing Date :NA
(62) Divisional to Application Number :NA
Filing Date :NA

(71)**Name of Applicant :**
1)ROBERT BOSCH GMBH
Address of Applicant :POSTFACH 30 02 30, 70442 STUTTGART Germany
(72)**Name of Inventor :**
1)BOHN, ROLAND
2)GEUBEL, PAUL

(57) Abstract :
The invention rclaies ID U window wiper system wiili a window wiper drive (I), in parlicular for rear window wipers of a motor vehicle, wilh a gear housing (10), which can be closed by means of a housing cover (14), for accommodating a gear arrangement (11), wherein the gear housing (10) and the housing cover (14) each have a run-on surface (15a, 15b) for axial guidance of the gear arrangement (II). When the housing cover (14) is closed, an intermediate space (16) is formed between the mutual) opposite run-on surfaces (15a, 15b), said intermediate space corresponding to the geomeirical dimensions of an inslallaUon region oflhe gear arrangement {1) to be inserted.

No. of Pages : 18 No. of Claims : 10

(12) PATENT APPLICATION PUBLICATION
(19) INDIA
(22) Date of filing of Application :21/12/2011
(21) Application No.4497/CHE/2011 A
(43) Publication Date : 14/03/2014

(54) Title of the invention : DOUBLE LAYER DENIM LIKE FABRIC

(51) International classification :D06P
(31) Priority Document No :NA
(32) Priority Date :NA
(33) Name of priority country :NA
(86) International Application No :NA
Filing Date :NA
(87) International Publication No : NA
(61) Patent of Addition to Application Number :NA
Filing Date :NA
(62) Divisional to Application Number :NA
Filing Date :NA

(71)**Name of Applicant :**
1)MANIKAM RAMASWAMI
Address of Applicant :NO.5, SATHYA NARAYANA AVENUE, BOATS CLUB ROAD, R.A. PURAM, CHENNAI-600028 Tamil Nadu India
(72)**Name of Inventor :**
1)MANIKAM RAMASWAMI

(57) Abstract :
The present invention relates to composite double layered denim like fabric comprising of plurality of at least two separate layers of warp yarn; and plurality of weft yarn. The warp yarn is cotton yarn and the weft yarn is non-cellulosic fibre. The warp yarn threads are interspaced to sink the intersecting non-cellulosic yarn in the weft. Both top and bottom surface layers of the fabric have more exposure of warp yarn, while the weft yarn get sunk in between the warp yarn thereby the fabric eliminates the contact of weft yarn ensuring good moisture management, low level of fabric pilling and static current. Only the warp yarn is dyed in fabric form to provide denim fabric appearance. Further, the present invention relates to a method of making composite double layered denim like fabric at lower cost of production.

No. of Pages : 11 No. of Claims : 8

(12) PATENT APPLICATION PUBLICATION
(19) INDIA
(22) Date of filing of Application :29/10/2012
(21) Application No.4497/CHE/2012 A
(43) Publication Date : 14/03/2014

(54) Title of the invention : MOTOR-DRIVEN COMPRESSOR

(51) International classification :H01L
(31) Priority Document No :2011-239309
(32) Priority Date :31/10/2011
(33) Name of priority country :Japan
(86) International Application No :NA
Filing Date :NA
(87) International Publication No : NA
(61) Patent of Addition to Application Number :NA
Filing Date :NA
(62) Divisional to Application Number :NA
Filing Date :NA

(71)**Name of Applicant :**
1)KABUSHIKI KAISHA TOYOTA JIDOSHOKKI
Address of Applicant :2-1, TOYODA-CHO, KARIYA-SHI, AICHI-KEN Japan
(72)**Name of Inventor :**
1)SUITOU, KEN
2)ENAMI, SHINGO
3)YAMAGUCHI, TSUYOSHI

(57) Abstract :
A motor-driven compressor includes a housing, an inverter assembly and an elastic member. The inverter assembly has a base member, a circuit board and an electronic component. The base member has a base portion and a sidewall portion that extends from the base portion toward the housing and is mounted on the housing. The circuit board is disposed in a space of the base member. The electronic component is mounted on a surface of the circuit board adjacent to the housing. The sidewall portion extends beyond an imaginary plane including the surface of the circuit board. The elastic member having heat conductivity is located between the circuit board and the base portion, between the circuit board and the sidewall portion, and over the surface of the circuit board so that the circuit board is embedded in the elastic member. A space is formed between the elastic member and the housing.

No. of Pages : 18 No. of Claims : 6

(12) PATENT APPLICATION PUBLICATION
(19) INDIA
(22) Date of filing of Application :06/01/2011
(21) Application No.45/CHE/2011 A
(43) Publication Date : 14/03/2014

(54) Title of the invention : APPARATUS FOR MEASURING LEVEL OF GAS IN A GAS CONTAINER

(51) International classification :G01D
(31) Priority Document No :NA
(32) Priority Date :NA
(33) Name of priority country :NA
(86) International Application No :NA
Filing Date :NA
(87) International Publication No : NA
(61) Patent of Addition to Application Number :NA
Filing Date :NA
(62) Divisional to Application Number :NA
Filing Date :NA

(71)**Name of Applicant :**
1)SREE LPG PRIVATE LTD.
Address of Applicant :230 Sharada Complex Gokulam II Stage 1st Main Road Mysore 570002 Karnataka India
(72)**Name of Inventor :**
1)SHYAMANUR SANJAY

(57) Abstract :
The present invention provides an apparatus for measuring level of gas in a gas container. A trolley includes a top plate is adapted to support agas container which is to be carried using the trolley and a bottom plate. The trolley further includes a set of pillars disposed between the top plate and the bottom plate. The trolley also includes digital sensors placed in each of the pillars for sensing the weight of the gas container via the top plate. Furthermore, the trolley includes a digital scale for computing weight of the gas container at any point of time based on the inputs from the digital sensors received in real time. Accordingly, the digital scale computes a level of the gas in the gas container based on the weight of the gas container and displays the level of gas in the gas container and also the weight of the gas container.

No. of Pages : 13 No. of Claims : 10

(12) PATENT APPLICATION PUBLICATION
(19) INDIA
(22) Date of filing of Application :27/03/2009
(21) Application No.1721/CHENP/2009 A
(43) Publication Date : 14/03/2014

(54) Title of the invention : USER-CONVERTED MEDIA MARKETPLACE

(51) International classification :G11B 5/09
(31) Priority Document No :11/514,413
(32) Priority Date :01/09/2006
(33) Name of priority country :U.S.A.
(86) International Application No :PCT/US2007/019107
Filing Date :29/08/2007
(87) International Publication No :(WO 2008/027493)
(61) Patent of Addition to Application Number :NA
Filing Date :NA
(62) Divisional to Application Number :NA
Filing Date :NA

(71)**Name of Applicant :**
1)YAHOO.INC
Address of Applicant :#701, FIRST AVENUE, SUNNYVALE,CALIFORNIA 94089 U.S.A.
(72)**Name of Inventor :**
1)OLIVER RASKIN
2)CHRIS KALABOUKIS
3)RON MARTINEZ

(57) Abstract :
At a server on a network, the reformatting of media is enabled by indicating that a media object in a first format is available for conversion into a second format, receiving, over the network, a representation of the media object in the second format, associating the media object in the second format with the media object in the first format, and making the representation available to at least one recipient. The representation may be the media object itself or a link to the media object.

No. of Pages : 17 No. of Claims : 14

(12) PATENT APPLICATION PUBLICATION
(19) INDIA
(22) Date of filing of Application :11/09/2012
(21) Application No.3763/CHE/2012 A
(43) Publication Date : 14/03/2014

(54) Title of the invention : A NOVEL METHOD TO INCREASE VIRAL TITRES OF POULTRY VACCINES

(51) International classification :C12N7/00
(31) Priority Document No :NA
(32) Priority Date :NA
(33) Name of priority country :NA
(86) International Application No :NA
Filing Date :NA
(87) International Publication No : NA
(61) Patent of Addition to Application Number :NA
Filing Date :NA
(62) Divisional to Application Number :NA
Filing Date :NA

(71)**Name of Applicant :**
1)TAMIL NADU VETERINARY AND ANIMAL SCIENCES UNIVERSITY
Address of Applicant :MADHAVARAM MILK COLONY, CHENNAI 600 051 Tamil Nadu India
(72)**Name of Inventor :**
1)MANOHARAN VINOTH KUMAR
2)GOPAL DHINAKAR RAJ
3)KRISHNASWAMY GOPALAN TIRUMURUGAAN
4)TUTICORIN MARAGATHAM ALAGESAN SENTHIL KUMAR
5)NAVAMANI DANIEL JOY CHANDRAN

(57) Abstract :
RNA against ChlFN-α were designed and chemically synthesised. siRNA significantly reduced the production of ChlFN-α mRNA in CEF cells at 24 and 48 h post-transfection by 3.85 and 3.65 folds respectively. The ChlFN-α protein was also significantly reduced from 24 - 72 h post-transfection. When NDV was infected in CEF cultures, ChlFN-α mRNA and protein production was significantly increased from 24 - 72 h post-infection. When siRNA transfected CEF cells was infected by NDV at 24 h post-transfection, ChlFN-a mRNA levels reduced significantly at 48 and 72 h post-infection. The ChlFN- α protein levels was also reduced from 24 - 72 h post-infection by 66.00, 56.17 and 27.31 folds respectively. In the siRNA induced ChlFN-α suppressed CEF cells, NDV replication was measured by qRT-PCR for NDV NP gene, virus infective and HA titres and virus-induced cytopathic effects (CPE). The NDV NP gene transcripts increased by a maximum of 5.51 folds at 48 h post-infection, virus titres by logioTCIDso of 0.75 and log2 haemagglutination titres by 1.0. Virus induced CPE initiated earlier and was slightly more extensive than mock-transfected CEF cells infected with NDV.

No. of Pages : 15 No. of Claims : 8

(12) PATENT APPLICATION PUBLICATION
(19) INDIA
(22) Date of filing of Application :22/10/2012
(21) Application No.4408/CHE/2012 A
(43) Publication Date : 14/03/2014

(54) Title of the invention : ONBOARD APPARATUS AND TRAIN-POSITION CALCULATION METHOD

(51) International classification :G01S19/00
(31) Priority Document No :2011-243397
(32) Priority Date :07/11/2011
(33) Name of priority country :Japan
(86) International Application No :NA
Filing Date :NA
(87) International Publication No : NA
(61) Patent of Addition to Application Number :NA
Filing Date :NA
(62) Divisional to Application Number :NA
Filing Date :NA

(71)**Name of Applicant :**
1)MITSUBISHI ELECTRIC CORPORATION
Address of Applicant :7-3, MARUNOUCHI 2-CHOME, CHIYODA-KU, TOKYO 100-8310 Japan
(72)**Name of Inventor :**
1)TOKUMARU, MAKOTO

(57) Abstract :
An onboard apparatus includes: a route database that stores start and end distances from a start point and a section length of the radiowave-reception difficult area; and an onboard control device that checks the rout database to determine whether the own train is in the radiowave-reception difficult area, and when the own train is not in the radiowave-reception difficult area, confirms whether position information has been obtained from a GPS receiver, and when the position information has not been obtained from the GPS receiver, executes control to stop the own train based on a running distance and a determination threshold for determining whether to stop the own train. When the own train is in the radiowave-reception difficult area, the onboard control device does not confirm whether the position information has been obtained from the GPS receiver, and updates a train position based on information from a speed power-generator.

No. of Pages : 29 No. of Claims : 16

(12) PATENT APPLICATION PUBLICATION
(21) Application No.4512/CHE/2012 A
(19) INDIA
(22) Date of filing of Application :30/10/2012
(43) Publication Date : 14/03/2014

(54) Title of the invention : NEGATIVE ELECTRODE ACTIVE MATERIAL FOR NON-AQUEOUS ELECTROLYTE SECONDARY BATTERY AND METHOD FOR MANUFACTURING THE SAME

(51) International classification	:H01M4/00
(31) Priority Document No	:2011-240680
(32) Priority Date	:01/11/2011
(33) Name of priority country	:Japan
(86) International Application No	:NA
Filing Date	:NA
(87) International Publication No	: NA
(61) Patent of Addition to Application Number	:NA
Filing Date	:NA
(62) Divisional to Application Number	:NA
Filing Date	:NA

(71)**Name of Applicant :**
1)SHIN-ETSU CHEMICAL CO., LTD.
Address of Applicant :6-1, OHTEMACHI 2-CHOME, CHIYODA-KU, TOKYO Japan
(72)**Name of Inventor :**
1)NAKANISHI, TETSUO
2)YAMADA, YOSHIYASU
3)TANIGUCHI, KAZUYUKI

(57) Abstract :
The present invention provides a method for manufacturing a negative electrode active material for a secondary battery that uses a non-aqueous electrolyte, including the steps of: depositing silicon according to an electron beam vapor-deposition method with metallic silicon as a raw material on a substrate of which temperature is controlled from 800 to 1100°C at a vapor deposition rate exceeding 1 kg/hr in the., range of film thickness of 2 to 30 mm; and pulverizing and classifying the deposited silicon to obtain the negative electrode active material. As a result, there is provided a method for manufacturing a negative electrode active material of silicon particles as an active material useful for a negative electrode of a non-aqueous electrolyte secondary battery that is, while maintaining high initial efficiency and battery capacity of silicon, excellent in the cycle characteristics and has a reduced volume change during charge/discharge.

No. of Pages : 54 No. of Claims : 14

(12) PATENT APPLICATION PUBLICATION
(19) INDIA
(22) Date of filing of Application :11/05/2009
(21) Application No.2609/CHENP/2009 A
(43) Publication Date : 14/03/2014

(54) Title of the invention : ANTAGONISTS OF PCSK9

(51) International classification :C07K16/40, A61K 39/395
(31) Priority Document No :60/857,293
(32) Priority Date :07/11/2006
(33) Name of priority country :U.S.A.
(86) International Application No :PCT/US2007/023223
Filing Date :02/11/2007
(87) International Publication No :WO 2008/063382 A1
(61) Patent of Addition to Application Number :NA
Filing Date :NA
(62) Divisional to Application Number :NA
Filing Date :NA

(71)**Name of Applicant :**
1)MERCK SHARP & DOHME CORP.
Address of Applicant :126 EAST LINCOLN AVENUE, RAHWAY, NJ 07065-0907 U.S.A.
(72)**Name of Inventor :**
1)SITLANI, AYESHA
2)SPARROW, CARL, P.
3)PANDIT, SHILPA,
4)CONDRA, JON, H
5)HAMMOND, HOLLY, A.

(57) Abstract :
Antagonists of human proprotein convertase subtilisin-kexin type 9 (PCSK9) are disclosed. The disclosed antagonists are effective in the inhibition of PCSK9 function and, accordingly, present desirable antagonists for the use in the treatment of conditions associated with PCSK9 activity. The present invention also discloses nucleic acid encoding said antagonists, vectors, host cells, and compositions comprising the antagonists. Methods of making PCSK9-specific antagonists as well as methods of using the antagonists for inhibiting or antagonizing PCSK9 function are also disclosed and form important additional aspects of the present disclosure.

No. of Pages : 58 No. of Claims : 38

(12) PATENT APPLICATION PUBLICATION
(19) INDIA
(22) Date of filing of Application :07/09/2012
(21) Application No.3712/CHE/2012 A
(43) Publication Date : 14/03/2014

(54) Title of the invention : BACTERIAL FERMENTATION PROCESS FOR EXTRACTION OF PROTEIN HYDROLYSATE FROM YEAST BIOMASS

(51) International classification :C12P13/00
(31) Priority Document No :NA
(32) Priority Date :NA
(33) Name of priority country :NA
(86) International Application No :NA
Filing Date :NA
(87) International Publication No : NA
(61) Patent of Addition to Application Number :NA
Filing Date :NA
(62) Divisional to Application Number :NA
Filing Date :NA

(71)**Name of Applicant :**
1)TAMIL NADU AGRICULTURAL UNIVERSITY
Address of Applicant :PROFESSOR AND HEAD, DEPARTMENT OF TRADE AND INTELLECTUAL PROPERTY, TAMIL NADU AGRICULTURAL UNIVERSITY, COIMBATORE 641 003 Tamil Nadu India
(72)**Name of Inventor :**
1)R. MURUGESAN
2)K. RAJASUNDARI
3)A.V. GNANASAMBANDAM

(57) Abstract :
Agro-industries generate a large variety of wastes and protein rich substances as by-products. Protein wastes when recycled and reprocessesed yields higher value products that can be utilized as feed supplements in birds, animals, fish and also for plants to enhance the growth and development. Distillery yeast biomass is one such by-product having high protein content of upto 40-60% which remains unused and unexplored. Microbial deproteinization was done using distillery yeast biomass as substrate for the extraction of protein in the form of amino acids by inoculating proteolytic bacterial culture, Bacillus tnegaterium PB4. The isolate PB4 produced maximum protease of 420.5 U ml-1. The deproteinization efficiency was 83.50% with optimum glucose concentration (1.0%), substrate concentration (5.0%), pH (7.0) and fermentation time (96 hours). At the end of fermentation, the fermented liquid was filtered which resulted in the protein hydrolysates with a pH of 4.72. Amino acid analysis revealed that protein hydrolysate was rich in 7 essential amino acids and 4 non-essential amino acids. The effect of protein hydrolysates on the growth and development of bhendi crop plant, broilers, piglets and fishlings were studied. It was found that the foliar application of protein hydrolysates performed well over the soil application in bhendi by enhancing the growth viz., plant height (92.54 cm), root length (72.56 cm) leaf area (704.55 cm2 plant-1) and chlorophyll content (3.12 mg g-1). Yield parameters like fruit length, fruit weight, number of fruits and yield recording 12.25 cm, 9.84 g, 8.20 plant-1 and 76.03 g plant-1, respectively over control. Protein hydrolysates when supplemented with feed to broilers at 25% level, recorded highest body weight (2696.7 g) which was 574.6 g increase over control at the end of 6 weeks (complete broiler cycle). The organoleptic studies of the broiler meat fed with protein hydrolysates had better quality. The effect of protein hydrolysates as feed supplement in piglets also performed well over control. Over a period of ten weeks, animals that received 50% as feed supplement recorded the maximum weight gain of 5.17 kg over control. In fishlings, the effect of protein hydrolysates on body weight was upto 43.37% increase over control. The microbially obtained protein hydrolysates from distillery yeast biomass is an economically viable product which could be used as feed additive for broilers, pigs ,fish and as an effective growth booster for bhendi crop systems.

No. of Pages : 27 No. of Claims : 4

(12) PATENT APPLICATION PUBLICATION
(19) INDIA
(22) Date of filing of Application :31/10/2012
(21) Application No.4537/CHE/2012 A
(43) Publication Date : 14/03/2014

(54) Title of the invention : DC-DC CONVERTER, SOLAR CHARGING SYSTEM, AND MOVABLE BODY

(51) International classification	:H02M1/00
(31) Priority Document No	:2011-238544
(32) Priority Date	:31/10/2011
(33) Name of priority country	:Japan
(86) International Application No	:NA
Filing Date	:NA
(87) International Publication No	: NA
(61) Patent of Addition to Application Number	:NA
Filing Date	:NA
(62) Divisional to Application Number	:NA
Filing Date	:NA

(71)**Name of Applicant :**
1)SHARP KABUSHIKI KAISHA
Address of Applicant :22-22, NAGAIKE-CHO, ABENO-KU, OSAKA-SHI, OSAKA 545-8522 Japan
(72)**Name of Inventor :**
1)IWATA, HIROSHI
2)YAOI, YOSHIFUMI
3)KOMIYA, KENJI
4)NOMURA, MASARU
5)OHTA, YOSHIJI

(57) Abstract :
This DC/DC converter includes a first DC/DC converter, and a second DC/DC converter for carrying out a DC/DC conversion of voltage supplied from the first DC/DC converter. One of either the first DC/DC converter or the second DC/DC converter is a fixed-factor DC/DC converter, and the other of either the first DC/DC converter or the second DC/DC converter is a variable-factor DC/DC converter.

No. of Pages : 73 No. of Claims : 9

(12) PATENT APPLICATION PUBLICATION
(19) INDIA
(22) Date of filing of Application :10/09/2012
(21) Application No.3742/CHE/2012 A
(43) Publication Date : 14/03/2014

(54) Title of the invention : PRESSURIZATION INITIATION VALVE WITH TELESCOPIC ACTUATOR BELLOW FOR GH2 APPLICATIONS

(51) International classification :F16K
(31) Priority Document No :NA
(32) Priority Date :NA
(33) Name of priority country :NA
(86) International Application No :NA
Filing Date :NA
(87) International Publication No : NA
(61) Patent of Addition to Application Number :NA
Filing Date :NA
(62) Divisional to Application Number :NA
Filing Date :NA

(71)**Name of Applicant :**
1)INDIAN SPACE RESEARCH ORGANISATION
Address of Applicant :ISRO HEADQUARTERS, DEPARTMENT OF SPACE, ANTARIKSH BHAVAN, NEW BEL ROAD, BANGALORE 560 094 Karnataka India
(72)**Name of Inventor :**
1)SUNIL S.
2)M. RADHAKRISHNAN

(57) Abstract :
A bellow valve actuator installed in a valve assembly having a cylindrical main body (1) which extends and communicates with an inlet (2) and outlet portion (3) in said main body (1), comprising a guide (9) movably arranged and aligned in the central cylindrical axis of the main body (1), a plurality of bellow segments arranged telescopically in series and being sealingly supported onto said movable guide (9), a connecting means disposed within said bellow segments for interconnecting the ends of said telescopically arranged bellow segments for sequential movement of bellows, and a plurality of restraining elements disposed exterior to said bellow segments for limiting the expansion and compression of the said plurality of bellow segments.

No. of Pages : 18 No. of Claims : 12

(12) PATENT APPLICATION PUBLICATION
(19) INDIA
(22) Date of filing of Application :10/09/2012
(21) Application No.3743/CHE/2012 A
(43) Publication Date : 14/03/2014

(54) Title of the invention : COMPACT PILOT OPERATED COMMAND VALVE WITH SELF ALIGNING POPPETS

(51) International classification :F16K31/00
(31) Priority Document No :NA
(32) Priority Date :NA
(33) Name of priority country :NA
(86) International Application No :NA
Filing Date :NA
(87) International Publication No : NA
(61) Patent of Addition to Application Number :NA
Filing Date :NA
(62) Divisional to Application Number :NA
Filing Date :NA

(71)**Name of Applicant :**
1)INDIAN SPACE RESEARCH ORGANISATION
Address of Applicant :ISRO HEADQUARTERS, DEPARTMENT OF SPACE, ANTARIKSH BHAVAN, NEW BEL ROAD, BANGALORE 560 094 Karnataka India
(72)**Name of Inventor :**
1)BENOY JOSEPH K
2)C. AMARASEKARAN

(57) Abstract :
The present invention relates to command valve assembly. In particular a pilot operated command valve. The existing pilot operated command valves are complex and huge in structure and posses high leak rate. The command valve assembly according to present invention discloses a pneumatically operated command valve and a solenoid operated pilot valve which are packed in a single valve body in parallel to each other and the service ports of each valves are provided in at the same face of the valve body in order to achieve maximum compactness. Moreover, self aligning polycarbonate poppets are provided for the command valve in order to reduce the leakage rate of the command valve. The valve assembly according to present invention can be implemented as a command valve for pneumatically operated device, which requires highly reduced leak rate, compactness and weight advantage.

No. of Pages : 15 No. of Claims : 8

(12) PATENT APPLICATION PUBLICATION
(19) INDIA
(22) Date of filing of Application :10/09/2012
(21) Application No.3744/CHE/2012 A
(43) Publication Date : 14/03/2014

(54) Title of the invention : TELESCOPIC CHATTER FREE POPPET CHECK VALVE

(51) International classification :F16K15/00
(31) Priority Document No :NA
(32) Priority Date :NA
(33) Name of priority country :NA
(86) International Application No :NA
Filing Date :NA
(87) International Publication No : NA
(61) Patent of Addition to Application Number :NA
Filing Date :NA
(62) Divisional to Application Number :NA
Filing Date :NA

(71)**Name of Applicant :**
1)INDIAN SPACE RESEARCH ORGANISATION
Address of Applicant :ISRO HEADQUARTERS, DEPARTMENT OF SPACE, ANTARIKSH BHAVAN, NEW BEL ROAD, BANGALORE 560 094 Karnataka India
(72)**Name of Inventor :**
1)RAJI GEORGE
2)A. MANIMARAN
3)C. AMARASEKARAN

(57) Abstract :
A chatter free poppet check valve assembly which is configured to allow passing a fluid in one direction is provided. The chatter free poppet check valve assembly includes a housing which includes an inlet, an outlet, and one or more poppets which are positioned in between the inlet and the outlet of the housing. The one or more poppets include a first poppet and a second poppet and the first poppet is telescopically disposed within the second poppet. The first poppet sliding inside the second poppet during open condition of the chatter free poppet check valve assembly and the first poppet moves away from the second poppet during close condition of the chatter free poppet check valve assembly.

No. of Pages : 18 No. of Claims : 6

(12) PATENT APPLICATION PUBLICATION
(19) INDIA
(22) Date of filing of Application :22/10/2012
(21) Application No.4390/CHE/2012 A
(43) Publication Date : 14/03/2014

(54) Title of the invention : LOADING AND UNLOADING APPARATUS AND METHOD

(51) International classification :B65G67/00
(31) Priority Document No :2011-242062
(32) Priority Date :04/11/2011
(33) Name of priority country :Japan
(86) International Application No :NA
Filing Date :NA
(87) International Publication No : NA
(61) Patent of Addition to Application Number :NA
Filing Date :NA
(62) Divisional to Application Number :NA
Filing Date :NA

(71)**Name of Applicant :**
1)KABUSHIKI KAISHA YASKAWA DENKI
Address of Applicant :2-1, KUROSAKI-SHIROISHI, YAHATANISHI-KU, KITAKYUSHU-SHI, FUKUOKA 806-0004 Japan
(72)**Name of Inventor :**
1)SHIGEKI MASUTOMI

(57) Abstract :
There is provided a loading and unloading apparatus for performing loading and unloading of workpieces with respect to access positions on a pallet, including a plurality of hands which sequentially access the access positions on the palette, the plurality of hands including a first and a second hand. Further, the loading and unloading apparatus includes a managing unit which maintains an access position of the first hand, and a determining unit which determines a movement path of the second hand based on the access position of the first hand.

No. of Pages : 43 No. of Claims : 9

(12) PATENT APPLICATION PUBLICATION
(19) INDIA
(22) Date of filing of Application :14/06/2012
(21) Application No.5209/CHENP/2012 A
(43) Publication Date : 14/03/2014

(54) Title of the invention : HETEROAROMATIC PHENYLIMIDAZOLE DERIVATIVES AS PDE10A ENZYME INHIBITORS

(51) International classification :C07D471/04
(31) Priority Document No :PA2009 01339
(32) Priority Date :17/12/2009
(33) Name of priority country :Denmark
(86) International Application No :PCT/DK2010/050341
Filing Date :15/12/2010
(87) International Publication No :WO 2011/072694 A1
(61) Patent of Addition to Application Number :NA
Filing Date :NA
(62) Divisional to Application Number :NA
Filing Date :NA

(71)**Name of Applicant :**
1)H. LUNDBECK A/S
Address of Applicant :9, OTTILIAVEJ, DK-2500 VALBY Denmark
(72)**Name of Inventor :**
1)PUSCHL, ASK
2)NIELSEN, JACOB
3)KEHLER, JAN
4)KILBURN, JOHN PAUL
5)MARIGO, MAURO
6)LANGGARD, MORTEN

(57) Abstract :
This invention is directed to compounds, which are PDIE lOA enzyme inhibitors. The invention provides a pharmaceutical composition comprising a therapeutically effective amount of a compound of the invention and a pharmaceutically acceptable carrier. The present invention also provides processes for the preparation of the compounds of formula I. The present invention further provides a method of treating a subject suffering from a neurodegenerative disorder comprising administering to the subject a therapeutically effective amount of a compound of formula I. The present invention also provides a method of treating a subject suffering from a drug addiction comprising administering to the subject a therapeutically effective amount of a compound of formula I. The present invention further provides a method of treating a subject suffering from a psychiatric disorder comprising administering to the subject a therapeutically effective amount of a compound of formula I.

No. of Pages : 87 No. of Claims : 32

(12) PATENT APPLICATION PUBLICATION
(19) INDIA
(22) Date of filing of Application :13/09/2012
(21) Application No.3800/CHE/2012 A
(43) Publication Date : 14/03/2014

(54) Title of the invention : FORMULATION COMPRISING PHENYLAMINOPYRIMIDINE DERIVATIVE AS ORAL SOLUTION

(51) International classification :A61K31/00
(31) Priority Document No :NA
(32) Priority Date :NA
(33) Name of priority country :NA
(86) International Application No :NA
Filing Date :NA
(87) International Publication No : NA
(61) Patent of Addition to Application Number :NA
Filing Date :NA
(62) Divisional to Application Number :NA
Filing Date :NA

(71)**Name of Applicant :**
1)NATCO PHARMA LIMITED
Address of Applicant :NATCO HOUSE, ROAD NO.2, BANJAGA HILLS, HYDERABAD, PIN CODE 500 033 Andhra Pradesh India
(72)**Name of Inventor :**
1)PARVATANENI DURGA MAHESWARI
2)SOMA DEEPTHI
3)APPADWEDULA VENKATA SATYANARAYANA
4)ADIBHATLA KALI SATYA BHUJANGA RAO
5)NANNAPANENI VENKAIAH CHOWDARY

(57) Abstract :
A pharmaceutical solution suitable for oral administration containing an effective amount of Imatinib including its pharmaceutically acceptable salts and polymorphs such as α, β or α2 to improve the dosage uniformity, palatability and thus patient compliance. The invention also relates to a process for the preparation of stable aqueous oral formulation that can be swallowed easily and comprising active ingredient in an effective concentration for the better therapy especially for the treatment of Chronic Myeloid Leukemia, Gastrointestinal Stromal Tumors and the like in small children and elderly patients.

No. of Pages : 26 No. of Claims : 28

(12) PATENT APPLICATION PUBLICATION
(19) INDIA
(22) Date of filing of Application :14/05/2012
(21) Application No.4233/CHENP/2012 A
(43) Publication Date : 14/03/2014

(54) Title of the invention : MACROCYCLIC GHRELIN RECEPTOR ANTAGONISTS AND INVERSE AGONISTS AND METHODS OF USING THE SAME

(51) International classification :C07K5/12
(31) Priority Document No :61/256,727
(32) Priority Date :30/10/2009
(33) Name of priority country :U.S.A.
(86) International Application No :PCT/US2010/054797
Filing Date :29/10/2010
(87) International Publication No :WO 2011/053821 A1
(61) Patent of Addition to Application Number :NA
Filing Date :NA
(62) Divisional to Application Number :NA
Filing Date :NA

(71)**Name of Applicant :**
1)TRANZYME PHARMA, INC.
Address of Applicant :5001 SOUTH MIAMI BLVD., DURHAM, NORTH CAROLINA-27703. U.S.A.
(72)**Name of Inventor :**
1)HOVEYDA, HAMID
2)MARSAULT, ERIC
3)THOMAS, HELMUT
4)FRASER, GRAEME
5)BEAUBIEN, SYLVIE
6)MATHIEU, AXEL
7)BEIGNET, JULIEN
8)BONIN,MARC-ANDRE
9)PHOENIX, SERGE
10)DRUTZ, DAVID
11)PETERSON, MARK
12)BEAUCHEMIN,SOPHIE
13)BRASSARD, MARTIN
14)VEZINA, MARTIN

(57) Abstract :
The present invention provides novel conformationally-defined macrocyclic compounds of formula (I) that have been demonstrated to be selective modulators of the ghrelin receptor (GRLN, growth hormone secretagogue receptor, GHS-Rla and subtypes, isoforms and/or variants thereof). Methods of synthesizing thenovel compounds are also described herein. These compounds are useful as antagonists or inverse agonists of the ghrelin receptor and as medicaments for treatment and prevention of a range of medical conditions including, but not limited to, metabolic and/or endocrine disorders, obesity and obesity-associated disorders, appetite or eating disorders, addictive disorders, cardiovascular disorders, gastrointestinal disorders, genetic disorders, hyperproliferative disorders, central nervous system disorders and inflammatory disorders.

No. of Pages : 370 No. of Claims : 39

(12) PATENT APPLICATION PUBLICATION
(19) INDIA
(22) Date of filing of Application :18/10/2012
(21) Application No.4348/CHE/2012 A
(43) Publication Date : 14/03/2014

(54) Title of the invention : IMAGE FORMING APPARATUS

(51) International classification :G03G15/00
(31) Priority Document No :2011-264057
(32) Priority Date :01/12/2011
(33) Name of priority country :Japan
(86) International Application No :NA
Filing Date :NA
(87) International Publication No : NA
(61) Patent of Addition to Application Number :NA
Filing Date :NA
(62) Divisional to Application Number :NA
Filing Date :NA

(71)**Name of Applicant :**
1)CANON KABUSHIKI KAISHA
Address of Applicant :3-30-2, SHIMOMARUKO, OHTA-KU, TOKYO Japan
(72)**Name of Inventor :**
1)OKI KITAGAWA
2)SHIGEAKI TAKADA
3)AKIYOSHI SHINAGAWA
4)HIROKI KAWAI

(57) Abstract :
An image forming apparatus is configured to be able to switch a target temperature of an image heating means from a standby target temperature during a standby state in which a pressurizing means is separated from the image heating means to a first target temperature cr a second target temperature which is lower than the standby and first target temperatures. The image forming apparatus controls a contacting/separating means such that a time from when an image forming signal is input until when the pressurizing means in the standby state contacts the image heating means and forms a nip is shorter in a case when the target temperature of the image heating means is the second target temperature than in a case when the target temperature of the image heating means is the first target temperature.

No. of Pages : 74 No. of Claims : 14

(12) PATENT APPLICATION PUBLICATION
(19) INDIA
(22) Date of filing of Application :26/10/2012
(21) Application No.4469/CHE/2012 A
(43) Publication Date : 14/03/2014

(54) Title of the invention : MEDICAL DEVICE RETRIEVAL KIT

(51) International classification :A61F
(31) Priority Document No :61/552,659
(32) Priority Date :28/10/2011
(33) Name of priority country :U.S.A.
(86) International Application No :NA
Filing Date :NA
(87) International Publication No : NA
(61) Patent of Addition to Application Number :NA
Filing Date :NA
(62) Divisional to Application Number :NA
Filing Date :NA

(71)**Name of Applicant :**
1)DR. JAMIE WILLIAMS
Address of Applicant :1585 SOUTH COLEBROOK ROAD, MANHEIM, PENNSYLVANIA 17545 U.S.A.
(72)**Name of Inventor :**
1)DR. JAMIE WILLIAMS

(57) Abstract :
A kit for the packaging and shipping of components of an explanted medical device. The kit includes sealable containers to individually package the components of the explanted medical device. The kit also includes dressing presoaked in a preservation fluid, the dressing being provided in at least one sealed container prior to the removal of the explanted medical device to maintain the dressing a presoaked, sterile condition. The amount of preservation fluid applied to the dressing is controlled, thereby eliminating the need for a reservoir of fluid to be provided.

No. of Pages : 25 No. of Claims : 20

(12) PATENT APPLICATION PUBLICATION
(19) INDIA
(22) Date of filing of Application :22/06/2012
(21) Application No.5440/CHENP/2012 A
(43) Publication Date : 14/03/2014

(54) Title of the invention : PROCESSES FOR THE MANUFACTURE OF A PHARMACEUTICALLY ACTIVE AGENT

(51) International classification :C07D209/10
(31) Priority Document No :61/289,530
(32) Priority Date :23/12/2009
(33) Name of priority country :U.S.A.
(86) International Application No :PCT/DK2010/050348
Filing Date :20/12/2010
(87) International Publication No :WO 2011/076212 A2
(61) Patent of Addition to Application Number :NA
Filing Date :NA
(62) Divisional to Application Number :NA
Filing Date :NA

(71)**Name of Applicant :**
1)H. LUNDBECK A/S
Address of Applicant :9, OTTILIAVEJ, DK-2500 VALBY Denmark
(72)**Name of Inventor :**
1)THERKELSEN, FRANS
2)ROCK, MICHAEL, HAROLD
3)TREPPENDAHL, SVEND

(57) Abstract :
Disclosed herein are processes for the preparation of a pharmaceutically active agent and pharmaceutically acceptable salts thereof

No. of Pages : 20 No. of Claims : 13

(12) PATENT APPLICATION PUBLICATION
(19) INDIA
(22) Date of filing of Application :29/11/2012
(21) Application No.10026/CHENP/2012 A
(43) Publication Date : 14/03/2014

(54) Title of the invention : METHOD AND DEVICE FOR SENDING BUFFER STATUS REPORT IN WIRELESS NETWORK

(51) International classification	:H04W72/12,H04W72/10,H04W28/14
(31) Priority Document No	:NA
(32) Priority Date	:NA
(33) Name of priority country	:NA
(86) International Application No Filing Date	:PCT/CN2010/072401 :03/05/2010
(87) International Publication No	:WO 2011/137576
(61) Patent of Addition to Application Number Filing Date	:NA :NA
(62) Divisional to Application Number Filing Date	:NA :NA

(71)**Name of Applicant :**
1)ALCATEL LUCENT
Address of Applicant :54 Rue La Botie F 75008 Paris France
(72)**Name of Inventor :**
1)WEN Pingping
2)YANG Tao

(57) Abstract :
The present invention provides a method and a device for sending a buffer status report in a wireless network. A user equipment is configured with a plurality of component carriers; after each Media Access Control Protocol Data Unit corresponding to each component carrier has been created the user equipment obtains the amount of data to be sent (S20); according to the amount of data to be sent the uplink buffer status report message is created (S21); the uplink buffer status report message is sent to the evolved NodeB (eNB) which administers the user equipment (S22). The present invention solves the problem of how to report the buffer status report message when a plurality of Media Access Control Protocol Data Units exist in a transport time interval. By adopting the solution of the present invention the eNB can explicitly obtain how many uplink resources can be assigned to the user equipment thereby ensuring a more efficient scheduling.

No. of Pages : 30 No. of Claims : 15

(12) PATENT APPLICATION PUBLICATION
(19) INDIA
(22) Date of filing of Application :26/03/2009
(21) Application No.1706/CHENP/2009 A
(43) Publication Date : 14/03/2014

(54) Title of the invention : PYRIDOOXAZEPINE PROGESTERON RECEPTOR MODULATORS

(51) International classification	:C07D498/04, A61K31/553
(31) Priority Document No	:06121372.4
(32) Priority Date	:27/09/2006
(33) Name of priority country	:EUROPEAN UNION
(86) International Application No	:PCT/EP2007/060225
Filing Date	:26/09/2007
(87) International Publication No	:WO 2008/037746
(61) Patent of Addition to Application Number	:NA
Filing Date	:NA
(62) Divisional to Application Number	:NA
Filing Date	:NA

(71)**Name of Applicant :**
1)N.V. ORGANON
Address of Applicant :P.O. BOX 20, KLOOSTERSTRAAT 6, NL-5349 AB OSS Netherlands
(72)**Name of Inventor :**
1)REWINKEL, JOHANNES, BERNARDUS, MARIA
2)FOLMER, BRIGITTE, JOHANNA, BERNITA
3)OLLERO-OLLERO, MARIA, LOURDES
4)IBRAHIM, HEMEN

(57) Abstract :
The present invention provides new progesterone receptor modulators (I) and (II) which are (cis)-8-fluorodibenzo[b,f]pyrido[l,2-d] oxazepine-1 -amine compounds and uses thereof.

No. of Pages : 32 No. of Claims : 29

(12) PATENT APPLICATION PUBLICATION
(19) INDIA
(22) Date of filing of Application :14/06/2012
(21) Application No.5212/CHENP/2012 A
(43) Publication Date : 14/03/2014

(54) Title of the invention : 2-ARYLIMIDAZOLE DERIVATIVES AS PDE10A ENZYME INHIBITORS

(51) International classification :C07D471/04
(31) Priority Document No :PA 2009 01341
(32) Priority Date :17/12/2009
(33) Name of priority country :Denmark
(86) International Application No :PCT/DK2010/050343
Filing Date :15/12/2010
(87) International Publication No :WO 2011/072696 A1
(61) Patent of Addition to Application Number :NA
Filing Date :NA
(62) Divisional to Application Number :NA
Filing Date :NA

(71)**Name of Applicant :**
1)H. LUNDBECK A/S.
Address of Applicant :9, OTTILIAVEJ DK-2500 VALBY Denmark
(72)**Name of Inventor :**
1)PUSCHL, ASK
2)NIELSEN, JACOB
3)KEHLER, JAN
4)KILBURN, JOHN PAUL
5)MARIGO, MAURO
6)LANGGARD, MORTEN

(57) Abstract :
This invention is directed to compounds, which are PDIE lOA enzyme inhibitors. The invention provides a pharmaceutical composition comprising a therapeutically effective amount of a compound of the invention and a pharmaceutically acceptable carrier. The present invention also provides processes for the preparation of the compounds of formula (I). The present invention further provides a method of treating a subject suffering from a neurodegenerative disorder comprising administering to the subject a therapeutically effective amount of a compound of formula (I). The present invention also provides a method of treating a subject suffering from a drug addiction comprising administering to the subject a therapeutically effective amount of a compound of formula (I). The present invention further provides a method of treating a subject suffering from a psychiatric disorder comprising administering to the subject a therapeutically effective amount of a compound of formula (I).

No. of Pages : 61 No. of Claims : 34

(12) PATENT APPLICATION PUBLICATION
(19) INDIA
(22) Date of filing of Application :02/08/2012
(21) Application No.6799/CHENP/2012 A
(43) Publication Date : 14/03/2014

(54) Title of the invention : SHORTED PATCH ANTENNA DEVICE AND MANUFACTURING METHOD THEREFOR

(51) International classification :H01Q13/08
(31) Priority Document No :2010-024250
(32) Priority Date :05/02/2010
(33) Name of priority country :Japan
(86) International Application No :PCT/JP2011/000345
Filing Date :24/01/2011
(87) International Publication No :WO 2011/096167 A1
(61) Patent of Addition to Application Number :NA
Filing Date :NA
(62) Divisional to Application Number :NA
Filing Date :NA

(71)**Name of Applicant :**
1)Mitsubishi Electric Corporation
Address of Applicant :7 3Marunouchi 2 chome Chiyoda ku Tokyo 1008310 Japan
(72)**Name of Inventor :**
1)OKEGAWA Hirokatsu
2)MIYAMAE Takanori
3)IWAKURA Takashi
4)NISHIOKA Yasuhiro
5)YANAGI Takashi

(57) Abstract :
Disclosed is a novel shorted patch antenna device that can be miniaturized and allows easy adjustment of parameters such as the thickness of an antenna conductor the position of a power feed point and the shape of an antenna element. Also disclosed is a method for manufacturing said shorted patch antenna device. The disclosed shorted patch antenna is provided with: an antenna element that comprises a single folded over conductor plate and has a radiating conductor surface (2) formed on one of two opposing surfaces of the conductor plate and a grounding conductor surface (3) formed on the other of the two opposing surfaces of the conductor plate; a hole (5) formed in the grounding conductor surface (3); a miniaturization part comprising an alignment adjustment surface (31) where the tip of the radiating conductor surface (2) is bent towards the grounding conductor surface (3) or a slit (7) cut out of a side of the radiating conductor surface (2); a coaxial cable (8) the inner conductor (9) of which extends to the radiating conductor surface (2) via the aforementioned hole (5) and is electrically connected to said radiating conductor surface (2) and the outer conductor (10) of which is grounded to the grounding conductor surface (3); and a resin (16) that is used to fill the space between the radiating conductor surface (2) and the grounding conductor surface (3) in the antenna element.

No. of Pages : 87 No. of Claims : 18

(12) PATENT APPLICATION PUBLICATION
(19) INDIA
(22) Date of filing of Application :12/09/2012
(21) Application No.3781/CHE/2012 A
(43) Publication Date : 14/03/2014

(54) Title of the invention : METHODS FOR CLUSTERING NETWORKS BASED ON TOPOLOGY DISCOVERY AND DEVICES THEREOF

(51) International classification :G06F17/00
(31) Priority Document No :NA
(32) Priority Date :NA
(33) Name of priority country :NA
(86) International Application No :NA
Filing Date :NA
(87) International Publication No : NA
(61) Patent of Addition to Application Number :NA
Filing Date :NA
(62) Divisional to Application Number :NA
Filing Date :NA

(71)**Name of Applicant :**
1)INFOSYS LIMITED
Address of Applicant :IP CELL, PLOT NO.44, ELECTRONIC CITY, HOSUR ROAD, BANGALORE - 560 100 Karnataka India
(72)**Name of Inventor :**
1)SATYABRATA PRADHAN
2)DR. RADHA KRISHNA PISIPATI
3)KISHORE JONNA

(57) Abstract :
A method, non-transitory computer readable medium, and device for clustering a network includes obtaining information regarding a network including relationship information for a plurality of nodes of the network. A weight value for each of a plurality of directly connected pairs of the plurality of nodes is determined, wherein the directly connected pair are identified based on the relationship information. At least one topology score is generated for each of the plurality of nodes. A plurality of clusters is generated using the topology scores and one of the plurality of nodes as a seed node for each of the clusters. At least the seed node used to generate at least a subset of the plurality of clusters is output.

No. of Pages : 25 No. of Claims : 20

(12) PATENT APPLICATION PUBLICATION
(19) INDIA
(22) Date of filing of Application :12/09/2012
(21) Application No.3782/CHE/2012 A
(43) Publication Date : 14/03/2014

(54) Title of the invention : METHOD AND SYSTEM FOR SECURELY ACCESSING DIFFERENT SERVICES BASED ON SINGLE SIGN ON

(51) International classification :G06F21/00
(31) Priority Document No :NA
(32) Priority Date :NA
(33) Name of priority country :NA
(86) International Application No :NA
Filing Date :NA
(87) International Publication No : NA
(61) Patent of Addition to Application Number :NA
Filing Date :NA
(62) Divisional to Application Number :NA
Filing Date :NA

(71)**Name of Applicant :**
1)INFOSYS LIMITED
Address of Applicant :IP CELL, PLOT NO 44, ELECTRONICS CITY, HOSUR ROAD, BANGALORE 560 100 Karnataka India
(72)**Name of Inventor :**
1)DR. VIJAYARAGHAVAN VARADHARAJAN
2)MR. SIVAKUMAR KUPPUSAMY
3)DR. RAJARATHNAM NALLUSAMY

(57) Abstract :
An embodiment for securely accessing services of a service provider based on single sign on. The user device is authenticated by an authentication server if the computed hash of the first random number r is same as the received hash of the first random number r sent by a user device. Thereafter, the second random number y, the user id and an element Q are encrypted using a service provider password and send to the service provider. The user device computes a first discrete exponential function Z using the element Q and the second random number y and sends along with the user id to the service provider. The service provider computes a second discrete exponential function Z using the element Q and the second random number y received from the authentication server and provides the user device access to the services if Z is equal to Z.

No. of Pages : 24 No. of Claims : 32

(12) PATENT APPLICATION PUBLICATION
(21) Application No.3783/CHE/2012 A
(19) INDIA
(22) Date of filing of Application :12/09/2012
(43) Publication Date : 14/03/2014

(54) Title of the invention : SYSTEM AND METHOD FOR CHECKING THE CONFORMANCE OF THE BEHAVIOR OF A PROCESS

(51) International classification :G06Q
(31) Priority Document No :NA
(32) Priority Date :NA
(33) Name of priority country :NA
(86) International Application No :NA
Filing Date :NA
(87) International Publication No : NA
(61) Patent of Addition to Application Number :NA
Filing Date :NA
(62) Divisional to Application Number :NA
Filing Date :NA

(71)**Name of Applicant :**
1)INFOSYS LIMITED
Address of Applicant :IP CELL, PLOT NO.44, ELECTRONICS CITY, HOSUR ROAD, BANGALORE - 560 100 Karnataka India
(72)**Name of Inventor :**
1)SUMAN ROY
2)SIDHARTH SHANKAR BIHARY
3)JAGADISH KONETI

(57) Abstract :
A method and apparatus for checking the fit of behaviour of a business process and observed behaviour of the system in terms of event logs. The method includes generating a behaviorally equivalent CSP description of the business process and trace equivalent CSP description of event logs. Further the generation of CSP processes for a business process includes segregating a business process model into a set of workflow patterns with connectivity between the workflow patterns, generating a CSP process corresponding to each workflow pattern, composing the CSP processes in parallel with connectivity between the CSP processes, and synchronizing the CSP processes on common activities of the CSP processes. Lastly the generation of a CSP description of the event log is performed by constructing a CSP process for each trace in the event log and combining the CSP descriptions using external choice operator.

No. of Pages : 26 No. of Claims : 18

(12) PATENT APPLICATION PUBLICATION
(19) INDIA
(22) Date of filing of Application :29/08/2012
(21) Application No.7463/CHENP/2012 A
(43) Publication Date : 14/03/2014

(54) Title of the invention : HIGH SPEED COMMUNICATION SYSTEM AND HIGH SPEED COMMUNICATION METHOD

(51) International classification :H04L29/06,H04L12/56
(31) Priority Document No :2010-032872
(32) Priority Date :17/02/2010
(33) Name of priority country :Japan
(86) International Application No :PCT/JP2011/052859
Filing Date :10/02/2011
(87) International Publication No :WO 2011/102294 A1
(61) Patent of Addition to Application Number :NA
Filing Date :NA
(62) Divisional to Application Number :NA
Filing Date :NA

(71)**Name of Applicant :**
1)NEC Corporation
Address of Applicant :7 1 Shiba 5 chome Minato ku Tokyo 1088001 Japan
(72)**Name of Inventor :**
1)HASEGAWA Yohei
2)JIBIKI Masahiro

(57) Abstract :
The disclosed high speed communication system is provided with multiple nodes disposed on a communication path and multiple communication connections spanning the aforementioned nodes. The aforementioned nodes exchange among themselves multiple units of performance model information indicating communication performance attainable by the aforementioned communication connections. The aforementioned nodes individually implement communication control on the basis of any of the aforementioned multiple units of performance model information.

No. of Pages : 36 No. of Claims : 10

(12) PATENT APPLICATION PUBLICATION
(19) INDIA
(22) Date of filing of Application :15/05/2012
(21) Application No.4277/CHENP/2012 A
(43) Publication Date : 14/03/2014

(54) Title of the invention : HEPATITIS C VIRUS INHIBITORS

(51) International classification	:C07D403/06, A61K31/4178
(31) Priority Document No	:61/260,569
(32) Priority Date	:12/11/2009
(33) Name of priority country	:U.S.A.
(86) International Application No	:PCT/US2010/056114
Filing Date	:10/11/2010
(87) International Publication No	:WO 2011/060000 A1
(61) Patent of Addition to Application Number	:NA
Filing Date	:NA
(62) Divisional to Application Number	:NA
Filing Date	:NA

(71)**Name of Applicant :**
1)BRISTOL-MYERS SQUIBB COMPANY
Address of Applicant :ROUTE 206 AND PROVINCE LINE ROAD, PRINCETON, NEW JERSEY 08543-4000 U.S.A.
(72)**Name of Inventor :**
1)LAVOIE, RICO
2)BENDER, JOHN A.
3)ROMINE, JEFFREY LEE
4)RUEDIGER, EDWARD H.
5)BACHAND, CAROL
6)LOPEZ, OMAR D.
7)CHEN, QI
8)BELEMA, MAKONEN
9)KADOW, JOHN F.
10)HAMANN, LAWRENCE G.

(57) Abstract :
This disclosure concerns novel compounds of Formula (I) or as defined in the specification and compositions comprising such novel compounds. These compounds are useful antiviral agents, especially in inhibiting the function of the NS5A protein encoded by Hepatitis C virus (HCV). Thus, the disclosure also concerns a method of treating HCV related diseases or conditions by use of these novel compounds or a composition comprising such novel compounds.

No. of Pages : 298 No. of Claims : 12

(12) PATENT APPLICATION PUBLICATION
(19) INDIA
(22) Date of filing of Application :22/10/2012
(21) Application No.4395/CHE/2012 A
(43) Publication Date : 14/03/2014

(54) Title of the invention : ARRANGEMENT OF A VALVE COVER ON THE CYLINDER HEAD OF AN INTERNAL COMBUSTION ENGINE

(51) International classification :F02F1/00
(31) Priority Document No :10 2011 116 934.6
(32) Priority Date :26/10/2011
(33) Name of priority country :Germany
(86) International Application No :NA
Filing Date :NA
(87) International Publication No : NA
(61) Patent of Addition to Application Number :NA
Filing Date :NA
(62) Divisional to Application Number :NA
Filing Date :NA

(71)**Name of Applicant :**
1)MAN TRUCK & BUS AG
Address of Applicant :DACHAUER STR. 667, 80995 MUNCHEN Germany
(72)**Name of Inventor :**
1)SENGSTOCK, HARALD
2)DIETMAIR, ANDREAS
3)RUDERT, TINO
4)FAKLER, UDO

(57) Abstract :
The invention relates to an arrangement of a valve cover on the cylinder head of an internal combustion engine having at least one cylinder, wherein the cylinder head has gas exchange valves, which can be actuated by means of a valve timing system and are connected to at least one inlet and one exhaust port, and wherein at least one valve cover, which closes off the cylinder head at the top and is connected directly or indirectly, by means of at least one flow connection, to the crankcase of the internal combustion engine, is fixed on the cylinder head by means of a plurality of screwed joints, preferably with a circumferential gasket inserted in between. According to the invention, provision is made for at least some of the screwed joints (9) provided to be provided and/or coupled in such a way with a resiliently and/or elastically flexible means (11) on a cold side (3) of the cylinder head (1) , which faces away from the at least one exhaust port in the cylinder head (1) and hence faces a cold side of the engine, that the valve cover (2) lifts off from the cylinder head (1) in a defined area of the cover only in the area of said cold side (3) when there is a defined excess pressure in the crankcase.

No. of Pages : 23 No. of Claims : 15

(12) PATENT APPLICATION PUBLICATION
(19) INDIA
(22) Date of filing of Application :22/10/2012
(21) Application No.4397/CHE/2012 A
(43) Publication Date : 14/03/2014

(54) Title of the invention : ACTUATING MECHANISM FOR FLUID DISPLACEMENT AND PRESSURIZING DEVICE

(51) International classification :A61M
(31) Priority Document No :13/285,662
(32) Priority Date :31/10/2011
(33) Name of priority country :U.S.A.
(86) International Application No :NA
Filing Date :NA
(87) International Publication No : NA
(61) Patent of Addition to Application Number :NA
Filing Date :NA
(62) Divisional to Application Number :NA
Filing Date :NA

(71)**Name of Applicant :**
1)ATRION MEDICAL PRODUCTS, INC.
Address of Applicant :1426 CURT FRANCIS ROAD, ARAB, ALABAMA 35016 U.S.A.
(72)**Name of Inventor :**
1)ROWLAND W. KANNER
2)RICHARD M. DAVIS
3)BRIAN A. ROBERTS

(57) Abstract :
A fluid displacement device, particularly for use of the device to pressurize balloon catheters, or the like. The device includes a plunger which is displaceable through a housing, and an actuating mechanism which engages the plunger. The actuating mechanism includes a nut member that is biased into engagement with a threaded portion of the plunger. The device has a press-to-release feature wherein the plunger is instantly releaseable by simply depressing a control surface to overcome a restorative spring force. Subsequently, the plunger can be translated using macro movements (i.e., by pushing or pulling the plunger).

No. of Pages : 51 No. of Claims : 20

(12) PATENT APPLICATION PUBLICATION
(19) INDIA
(22) Date of filing of Application :06/09/2012
(21) Application No.7694/CHENP/2012 A
(43) Publication Date : 14/03/2014

(54) Title of the invention : ANALYZING METHOD OF PHASE INFORMATION ANALYZING PROGRAM OF THE PHASE INFORMATION STORAGE MEDIUM AND X RAY IMAGING APPARATUS

(51) International classification	:G01B11/25,G01B15/00,G21K7/00
(31) Priority Document No	:2010027214
(32) Priority Date	:10/02/2010
(33) Name of priority country	:Japan
(86) International Application No	:PCT/JP2011/051683
Filing Date	:21/01/2011
(87) International Publication No	:WO 2011/099377
(61) Patent of Addition to Application Number	:NA
Filing Date	:NA
(62) Divisional to Application Number	:NA
Filing Date	:NA

(71)**Name of Applicant :**
1)CANON KABUSHIKI KAISHA
Address of Applicant :30 2 Shimomaruko 3 chome Ohta ku Tokyo 1468501 Japan
(72)**Name of Inventor :**
1)NAGAI Kentaro

(57) Abstract :
An analyzing method for deriving phase information by analyzing a periodic pattern of moir comprises steps of: subjecting at least a part of the periodic pattern of moir to a windowed Fourier transform by a window function; calculating analytically based on the moir subjected to the windowed Fourier transform information of a first spectrum carrying the phase information and information of a second spectrum superimposed on the information of the first spectrum; and separating the information of the first spectrum from the information of the second spectrum to derive the phase information.

No. of Pages : 27 No. of Claims : 10

(12) PATENT APPLICATION PUBLICATION
(19) INDIA
(22) Date of filing of Application :06/09/2012
(21) Application No.7695/CHENP/2012 A
(43) Publication Date : 14/03/2014

(54) Title of the invention : RESIDUAL CURRENT PROTECTION DEVICE

(51) International classification :H01H83/20,H01H73/18
(31) Priority Document No :NA
(32) Priority Date :NA
(33) Name of priority country :NA
(86) International Application No :PCT/CN2010/071757
Filing Date :14/04/2010
(87) International Publication No :WO 2011/127654
(61) Patent of Addition to Application Number :NA
Filing Date :NA
(62) Divisional to Application Number :NA
Filing Date :NA

(71)**Name of Applicant :**
1)ABB SPA
Address of Applicant :Via Vittor Pisani 16 I 20124 Milan Italy
(72)**Name of Inventor :**
1)GAO Xinxia
2)JIANG Wei
3)JI Lizhong

(57) Abstract :
A residual current protection device comprises an arc guiding plate which is configured to guide arc generated during contacts broken to an arc extinguishing unit. The arc extinguishing unit includes: an arc extinguishing channel configured to extinguish the arc; and an enhanced arc extinguisher disposed between the extinguishing channel and the arc guiding plate for impelling the arc into the extinguishing channel.

No. of Pages : 15 No. of Claims : 7

(12) PATENT APPLICATION PUBLICATION
(19) INDIA
(22) Date of filing of Application :11/09/2012
(21) Application No.3777/CHE/2012 A
(43) Publication Date : 14/03/2014

(54) Title of the invention : METHODS FOR PRODUCING RECOMBINANT PEPTIDES AND PROTEIN FROM NON-FILAMENTOUS FUNGI AND RECOMBINANT HOST CELL THEREOF

(51) International classification	:C07K14/00
(31) Priority Document No	:NA
(32) Priority Date	:NA
(33) Name of priority country	:NA
(86) International Application No	:NA
Filing Date	:NA
(87) International Publication No	: NA
(61) Patent of Addition to Application Number	:NA
Filing Date	:NA
(62) Divisional to Application Number	:NA
Filing Date	:NA

(71)**Name of Applicant :**
1)CENTRE FOR BIOSEPARATION TECHNOLOGY-VIT
Address of Applicant :VIT University Vellore - 632 014 Tamil Nadu India.
2)CHRISTIAN MEDICAL COLLEGE
(72)**Name of Inventor :**
1)VIGNESH NARASIMHAN J.
2)SUDHEER REDDY A.R.
3)SATHEESHKUMAR P.K.
4)KRISHNAN V.
5)VIJAYALAKSHMI M.A.

(57) Abstract :
The present disclosure relates specifically to a process of producing heavy chain peptide and/or light chain peptide of recombinant Factor VIII protein using Pichia pastoris expression system. The disclosure further relates to a process of producing a functional recombinant Factor VIII protein by reconstituting the Heavy chain and Light chain produced using said Pichia pastoris expression system. The said functional recombinant Factor VIII protein shows improved activity and therefore is used in the management of haemophilia.

No. of Pages : 35 No. of Claims : 18

(12) PATENT APPLICATION PUBLICATION
(19) INDIA
(22) Date of filing of Application :12/12/2011
(21) Application No.4311/CHE/2011 A
(43) Publication Date : 14/03/2014

(54) Title of the invention : STABLE PARENTERAL PAHRMACEUTICAL COMPOSITION OF 3-[1R,2R)-3-(DIMETHYLAMINO)-1-ETHYL-2-METHYLPROPYL]PHEBOL HYDROCHLORIDE

(51) International classification :C07D
(31) Priority Document No :NA
(32) Priority Date :NA
(33) Name of priority country :NA
(86) International Application No :NA
Filing Date :NA
(87) International Publication No : NA
(61) Patent of Addition to Application Number :NA
Filing Date :NA
(62) Divisional to Application Number :NA
Filing Date :NA

(71)**Name of Applicant :**
1)MSN LABORATORIES LIMITED
Address of Applicant :FACTORY:SY.NO:317 & 323, RUDRARAM (VIL), PATANCHERU (MDL), MEDAK (DIST), - 502 329 Andhra Pradesh India
(72)**Name of Inventor :**
1)SRINIVASAN THIRUMALAI RAJAN
2)MADHU ELVATHINGAL NICHOLAS
3)GARUDAIAHGARI SRINIVASA VENKATA SUBRAMANYAM

(57) Abstract :
The present invention relates to stable parenteral pharmaceutical composition comprising of 3-[(li,2i)-3-(dimethylamino)-l-ethyl-2-methylpropyl]phenol or its pharmaceutically acceptable salts; preferably hydrochloride. Further, the present invention relates to a process for its preparation thereof.

No. of Pages : 17 No. of Claims : 10

(12) PATENT APPLICATION PUBLICATION
(19) INDIA
(22) Date of filing of Application :25/10/2012
(21) Application No.4432/CHE/2012 A
(43) Publication Date : 14/03/2014

(54) Title of the invention : MOTOR-DRIVEN COMPRESSOR

(51) International classification :F04B
(31) Priority Document No :2011-239305
(32) Priority Date :31/10/2011
(33) Name of priority country :Japan
(86) International Application No :NA
Filing Date :NA
(87) International Publication No : NA
(61) Patent of Addition to Application Number :NA
Filing Date :NA
(62) Divisional to Application Number :NA
Filing Date :NA

(71)**Name of Applicant :**
1)KABUSHIKI KAISHA TOYOTA JIDOSHOKKI
Address of Applicant :2-1, TOYODA-CHO, KARIYA-SHI, AICHI-KEN Japan
(72)**Name of Inventor :**
1)SUITOU, KEN
2)KINOSHITA, YUSUKE
3)YAMAGUCHI, TSUYOSHI

(57) Abstract :
A motor-driven compressor includes a compression mechanism compressing refrigerant gas, an electric motor driving the compression mechanism, a housing made of a thermally conductive material and accommodating the compression mechanism and the electric motor and an inverter assembly controlling rotation of the electric motor. The inverter assembly includes an elastic member made of a thermally conductive material and disposed in contact with the housing, a circuit board supported directly by the elastic member, an electronic part mounted on the circuit board and a base member made of a thermally conductive material, fixed to the housing and having a closed end. The base member fixes the electronic part. The base member and the housing cooperate to form an accommodation space that accommodates the elastic member, the circuit board and the electronic part. The closed end of the base member and the elastic member forms therebetween a space.

No. of Pages : 14 No. of Claims : 5

(12) PATENT APPLICATION PUBLICATION
(19) INDIA
(22) Date of filing of Application :25/10/2012
(21) Application No.4433/CHE/2012 A
(43) Publication Date : 14/03/2014

(54) Title of the invention : METHOD FOR MANUFACTURING AN ELASTIC SHAFT COUPLING

(51) International classification :F16F
(31) Priority Document No :10 2011 117 154.5
(32) Priority Date :28/10/2011
(33) Name of priority country :Germany
(86) International Application No :NA
Filing Date :NA
(87) International Publication No : NA
(61) Patent of Addition to Application Number :NA
Filing Date :NA
(62) Divisional to Application Number :NA
Filing Date :NA

(71)**Name of Applicant :**
1)HACKFORTH GMBH
Address of Applicant :HEERSTRASSE 66, 44653 HERNE Germany
(72)**Name of Inventor :**
1)GODECKE, GUNNAR
2)BOHMER, JURGEN

(57) Abstract :
The invention relates to a method for manufacturing an elastic shaft coupling, wherein at least one elastomer body (1) each is connected with at least two connecting plates (2) by vulcanization to become one coupling body composite (3). It is the object of the present invention to provide an improved method for the manufacture of an elastic shaft coupling. To this effect, the present invention proposes to tailor the coupling body composite (3) after the vulcanization procedure according to a predefined dimensioning and to attach interfaces (4) in a further work step at the connecting plates (2) to serve for connection with input drive or output drive elements of a drive train.

No. of Pages : 13 No. of Claims : 6

(12) PATENT APPLICATION PUBLICATION
(19) INDIA
(22) Date of filing of Application :06/09/2012
(21) Application No.7702/CHENP/2012 A
(43) Publication Date : 14/03/2014

(54) Title of the invention : DEVICE AND METHOD FOR INTER CELL INTERFERENCE COORDINATION IN RELAY AUXILIARY CELLULAR NETWORK

(51) International classification :H04W16/10
(31) Priority Document No :NA
(32) Priority Date :NA
(33) Name of priority country :NA
(86) International Application No :PCT/CN2010/000204
Filing Date :12/02/2010
(87) International Publication No :WO 2011/097764
(61) Patent of Addition to Application Number :NA
Filing Date :NA
(62) Divisional to Application Number :NA
Filing Date :NA

(71)**Name of Applicant :**
1)ALCATEL LUCENT SHANGHAI BELL CO. LTD.
Address of Applicant :388 # Ningqiao Road Pudong Xinqu Shanghai 201206 China
2)ALCATEL LUCENT
(72)**Name of Inventor :**
1)WANG Jun
2)WANG Dongyao
3)JIANG Qi
4)PANG Jiyong
5)LIU Jianguo
6)SHEN Gang

(57) Abstract :
The present invention provides an equipment and method for inter cell interference coordination (ICIC) in a relay auxiliary communication system. Given a sector according to the payload information of the adjacent sector of said sector it is judged whether the relay of said sector is overloaded or the relay of the adjacent sector of said sector is overloaded. If the relay of said sector is overloaded relative to the adjacent sector of said sector said sector utilizes the relay resource released by the adjacent sector of said sector; if the relay of the adjacent sector of said sector is overloaded relative to said sector the relay resource which has been assigned to said sector is released according to the payload information of the adjacent sector.

No. of Pages : 27 No. of Claims : 12

(12) PATENT APPLICATION PUBLICATION
(19) INDIA
(22) Date of filing of Application :06/09/2012
(21) Application No.7703/CHENP/2012 A
(43) Publication Date : 14/03/2014

(54) Title of the invention : STORAGE STABLE WATER BASED EPOXY AMINE CURABLE SYSTEMS

(51) International classification :C08L63/00
(31) Priority Document No :10002471.0
(32) Priority Date :10/03/2010
(33) Name of priority country :EPO
(86) International Application No :PCT/US2011/027200
Filing Date :04/03/2011
(87) International Publication No :WO 2011/112452
(61) Patent of Addition to Application Number :NA
Filing Date :NA
(62) Divisional to Application Number :NA
Filing Date :NA

(71)**Name of Applicant :**
1)MOMENTIVE SPECIALTY CHEMICALS INC.
Address of Applicant :180 East Broad Street Columbus OH 43215 U.S.A.
2)MOMENTIVE SPECIALTY CHEMICALS RESEARCH BELGIUM S.A.
(72)**Name of Inventor :**
1)ELMORE Jim
2)CLAEYS BOUUAERT Pascale
3)HEINE Francoise

(57) Abstract :
The invention relates to non aqueous curing agents for water dispersed epoxy resins. The curing agent composition offers a binder pot life of several hours and in the presence of a metal such as zinc nearly no hydrogen generation is observed. The present curing composition can be mixed with a metal powder to provide a storage stable paste. The curing agent composition and/or paste is fully compatible with an epoxy water based resin. After low shear blending the epoxy curing agent and metal system is storage stable for several hours working pot life that provides for cured coatings having good performance.

No. of Pages : 24 No. of Claims : 12

(12) PATENT APPLICATION PUBLICATION
(19) INDIA
(22) Date of filing of Application :06/09/2012
(21) Application No.7705/CHENP/2012 A
(43) Publication Date : 14/03/2014

(54) Title of the invention : CATALYST FOR PRODUCING HYDROGENATED BIODIESEL AND METHOD OF PRODUCING THE SAME

(51) International classification :B01J23/755,B01J23/24,C10G3/00
(31) Priority Document No :1020100012711
(32) Priority Date :11/02/2010
(33) Name of priority country :Republic of Korea
(86) International Application No :PCT/KR2010/007184
Filing Date :20/10/2010
(87) International Publication No :WO 2011/099686
(61) Patent of Addition to Application Number :NA
Filing Date :NA
(62) Divisional to Application Number :NA
Filing Date :NA

(71)**Name of Applicant :**
1)SK INNOVATION CO. LTD.
Address of Applicant :99 Seorin dong Jongro gu Seoul 110 110 Republic of Korea
2)SK ENERGY CO. LTD.
(72)**Name of Inventor :**
1)LEE Sang Il
2)KIM Do Woan
3)JEON Hee Jung
4)RYU Jae Wook
5)KIM Gyung Rok
6)OH Seung Hoon
7)JU Sang Jun

(57) Abstract :
Disclosed herein is a catalyst for producing biodiesel including a carrier having water resistance and an active component supported on the carrier and used in a hydrotreating reaction or a decarboxylation reaction. Since the catalyst for producing biodiesel includes a carrier having strong water resistance the deactivation of the catalyst due to the water produced through a process of producing HBD can be prevented thus remarkably improving the long term stability of a catalyst.

No. of Pages : 18 No. of Claims : 16

(12) PATENT APPLICATION PUBLICATION
(19) INDIA
(22) Date of filing of Application :06/09/2012
(21) Application No.7707/CHENP/2012 A
(43) Publication Date : 14/03/2014

(54) Title of the invention : AUTOMATIC FLOW BLOCKING SYSTEM FOR REVERSE PULSE FILTER CLEANING

(51) International classification :B01D46/04
(31) Priority Document No :61/312535
(32) Priority Date :10/03/2010
(33) Name of priority country :U.S.A.
(86) International Application No :PCT/US2011/027918
Filing Date :10/03/2011
(87) International Publication No :WO 2011/112819
(61) Patent of Addition to Application Number :NA
Filing Date :NA
(62) Divisional to Application Number :NA
Filing Date :NA

(71)**Name of Applicant :**
1)SPRAYING SYSTEMS CO.
Address of Applicant :P.O. Box 7900 North Avenue and Schmale Road Wheaton Illinois 60187 7901 U.S.A.
(72)**Name of Inventor :**
1)SZCZAP Joseph P.

(57) Abstract :
A powder processing system having a processing vessel into which powder is pneumatically supplied and an exhaust plenum that communicates with the processing vessel through an exhaust port. A filter is located at the exhaust port for filtering air borne powder from the air flow exiting the processing vessel and a reverse pulse air filtering device is provided for selectively removing accumulated powder from the filter. The cleaning device includes a nozzle having a first portion within the air plenum and a second portion within the air filter and a plunger is mounted on the first filter portion for movement to an exhaust port closing position as an incident to the direction of pressurized air through the first portion of the nozzle for enabling pressurized air from the second portion of the nozzle to thereupon be directed through the filter without hindrance of air exiting the processing vessel.

No. of Pages : 16 No. of Claims : 16

(12) PATENT APPLICATION PUBLICATION
(19) INDIA
(22) Date of filing of Application :06/09/2012
(21) Application No.7708/CHENP/2012 A
(43) Publication Date : 14/03/2014

(54) Title of the invention : METHODS OF DIAGNOSING AND TREATING CANCER IN PATIENTS HAVING OR DEVELOPING RESISTANCE TO A FIRST CANCER THERAPY

(51) International classification	:C12Q1/68,A61K31/4184,C12N9/12
(31) Priority Document No	:61/312193
(32) Priority Date	:09/03/2010
(33) Name of priority country	:U.S.A.
(86) International Application No	:PCT/US2011/027689
Filing Date	:09/03/2011
(87) International Publication No	:WO 2011/112678
(61) Patent of Addition to Application Number	:NA
Filing Date	:NA
(62) Divisional to Application Number	:NA
Filing Date	:NA

(71)**Name of Applicant :**
1)DANA FARBER CANCER INSTITUTE INC.
Address of Applicant :450 Brookline Avenue Boston MA 02215 U.S.A.
2)THE BROAD INSTITUTE INC.
(72)**Name of Inventor :**
1)GARRAWAY Levi A.
2)JOHANNESSEN Cory M.

(57) Abstract :
A method of identifying a subject having cancer who is likely to benefit from treatment with a combination therapy with a RAF inhibitor and a second inhibitor is provided. A method of treating cancer in a subject in need thereof is also provided and includes administering to the subject an effective amount of a RAF inhibitor and an effective amount of a second inhibitor wherein the second inhibitor is a MEK inhibitor a CRAF inhibitor a CrkL inhibitor or a TPL2/COT inhibitor. A method of identifying a kinase target that confers resistance to a first inhibitor is also provided.

No. of Pages : 116 No. of Claims : 29

(12) PATENT APPLICATION PUBLICATION
(19) INDIA
(22) Date of filing of Application :06/09/2012
(21) Application No.7709/CHENP/2012 A
(43) Publication Date : 14/03/2014

(54) Title of the invention : LUBRICATING OIL COMPOSITION FOR INTERNAL COMBUSTION ENGINES

(51) International classification :C10M169/04,C10M101/02,C10M135/18
(31) Priority Document No :2010064942
(32) Priority Date :19/03/2010
(33) Name of priority country :Japan
(86) International Application No :PCT/JP2011/056626
Filing Date :18/03/2011
(87) International Publication No :WO 2011/115265
(61) Patent of Addition to Application Number :NA
Filing Date :NA
(62) Divisional to Application Number :NA
Filing Date :NA

(71)**Name of Applicant :**
1)IDEMITSU KOSAN CO.LTD.
Address of Applicant :1 1 Marunouchi 3 chome Chiyoda ku Tokyo 1008321 Japan
(72)**Name of Inventor :**
1)YAMADA Ryou

(57) Abstract :
Provided is a lubricating oil composition for internal combustion engines which has a low viscosity and can nevertheless reduce noise in running prevent fatigue damage such as gear pitting and reduce the consumption of lubricating oil and which can ensure high fuel efficiency. A lubricating oil composition for internal combustion engines which is characterized by: comprising a base oil that exhibits a viscosity index of 125 or more and a Noack evaporation loss (250°C — 1h) of 15mass% or less and 0.1 to 10mass% (relative to the whole composition) of a C olefin polymer (A) that has a mass average molecular weight of 500 to 10 000 and/or a high molecular compound (B) that has a mass average molecular weight of 10 000 to less than 100 000; and having a high molecular compound (C) content of less than 1.0mass% the compound (C) having a mass average molecular weight of 100 000 or more.

No. of Pages : 33 No. of Claims : 5

(12) PATENT APPLICATION PUBLICATION
(19) INDIA
(22) Date of filing of Application :06/09/2012
(21) Application No.7699/CHENP/2012 A
(43) Publication Date : 14/03/2014

(54) Title of the invention : METHOD AND DEVICE FOR TRANSMITTING AND RECEIVING POWER HEAD ROOM REPORT

(51) International classification :H04W24/10,H04W52/30,H04W52/00
(31) Priority Document No :NA
(32) Priority Date :NA
(33) Name of priority country :NA
(86) International Application No :PCT/CN2010/070673
Filing Date :11/02/2010
(87) International Publication No :WO 2011/097819
(61) Patent of Addition to Application Number :NA
Filing Date :NA
(62) Divisional to Application Number :NA
Filing Date :NA

(71)**Name of Applicant :**
1)ALCATEL LUCENT SHANGHAI BELL CO. LTD.
Address of Applicant :No. 388 Ningqiao Road Pudong Jinqiao Shanghai 201206 China
2)ALCATEL LUCENT
(72)**Name of Inventor :**
1)WEN Pingping
2)YANG Lin
3)ZHONG Chongxian

(57) Abstract :
The present application discloses a method and device for transmitting and receiving power head room reports. The method for transmitting power head room reports includes: forming power head room reports each specific to each carrier component at a user equipment and transmitting the power head room reports to a base station. Implementation of the method and device disclosed by the present application can provide an integral power head room reporting mechanism for a Long Term Evolution Advanced (LTE A) system with multiple new characteristics. In addition by receiving power head room reports each specific to each carrier component the base station can further derive how many resource units need to be allocated to a user equipment and the corresponding modulation and coding scheme thereby effectively scheduling resources and guaranteeing transmission quality of wireless links.

No. of Pages : 22 No. of Claims : 22

(12) PATENT APPLICATION PUBLICATION
(19) INDIA
(22) Date of filing of Application :06/09/2012
(21) Application No.7700/CHENP/2012 A
(43) Publication Date : 14/03/2014

(54) Title of the invention : TRAIN CONTROL SYSTEM AND HANDOVER METHOD IN TRAIN CONTROL SYSTEM

(51) International classification :B61L3/12,B60L15/40,H04W4/04
(31) Priority Document No :NA
(32) Priority Date :NA
(33) Name of priority country :NA
(86) International Application No :PCT/JP2010/052547
Filing Date :19/02/2010
(87) International Publication No :WO 2011/101983
(61) Patent of Addition to Application Number :NA
Filing Date :NA
(62) Divisional to Application Number :NA
Filing Date :NA

(71)**Name of Applicant :**
1)Mitsubishi Electric Corporation
Address of Applicant :7 3 Marunouchi 2 chome Chiyoda ku Tokyo 1008310 Japan
(72)**Name of Inventor :**
1)ISHIHARA Mikihisa

(57) Abstract :
Disclosed is a train control system which is provided with: a train speed calculation unit (31) which uses train line position information notified from a train car (16) to calculate the train speed; a predicted transit time calculation unit (32) for calculating the predicted transit time at a handover (H/O) location on the basis of H/O locations stored in advance the calculated train speed and the brake performance; a wireless CH reservation unit (33) which processes reservations of the wireless CH at the wireless base station of the H/O destination on the basis of the usage state of the wireless channel assigned to the wireless base station at the H/O destination and the calculated predicted transit time; and a wireless CH reservation result notification unit (34) which notifies a wireless base station (11A1) at the H/O origin of the reservation result from the wireless CH reservation unit (33).

No. of Pages : 46 No. of Claims : 17

(12) PATENT APPLICATION PUBLICATION
(19) INDIA
(22) Date of filing of Application :06/09/2012
(21) Application No.7701/CHENP/2012 A
(43) Publication Date : 14/03/2014

(54) Title of the invention : NETWORK ACCESS METHOD AND SYSTEM FOR MACHINE TYPE COMMUNICATIONS

(51) International classification :H04W74/08
(31) Priority Document No :NA
(32) Priority Date :NA
(33) Name of priority country :NA
(86) International Application No :PCT/CN2010/000207
Filing Date :12/02/2010
(87) International Publication No :WO 2011/097767
(61) Patent of Addition to Application Number :NA
Filing Date :NA
(62) Divisional to Application Number :NA
Filing Date :NA

(71)**Name of Applicant :**
1)ALCATEL LUCENT SHANGHAI BELL CO. LTD.
Address of Applicant :No. 388 Ningqiao Road Pudong Xinqu Shanghai 201206 China
2)ALCATEL LUCENT
(72)**Name of Inventor :**
1)ZHAO Qun
2)ZHENG Wu
3)LIU Jimin

(57) Abstract :
The present invention provides a network access method and system for Machine Type Communications (MTC) wherein the method includes the following steps: an MTC device sends a preamble signal to a base station; the base station sends a Random Access Response (RAR) to the MTC device; if the RAR does not include an indicator for a temporary access resource allocation then the MTC device sends a layer 2/layer 3 message to the base station otherwise the MTC device tries to perform the network access again; the base station sends a contention resolution message to the MTC device; if the contention resolution message includes its identifier which is included in the layer 2/layer 3 message sent by the MTC device then the network access is accomplished; if the contention resolution message includes the indicator for the temporary access resource allocation then the MTC device tries to perform the network access again; and otherwise the MTC device uses the initially used access resource to try to perform the network access again. According to the present invention the allocation and release for the MTC access resource can be performed dynamically and quickly according to the actual collision status of the access resource and the waste of the uplink resource in the semi static configuration is avoided and the possibility that the collision occurs is reduced and the normal access of a non MTC device is protected.

No. of Pages : 31 No. of Claims : 14

(12) PATENT APPLICATION PUBLICATION
(19) INDIA
(22) Date of filing of Application :01/12/2008
(21) Application No.3022/CHE/2008 A
(43) Publication Date : 14/03/2014

(54) Title of the invention : METHOD AND SYSTEM FOR CUSTOMIZING DISPLAY OF DATA IN COMMUNICATION DEVICES

(51) International classification :G06F
(31) Priority Document No :NA
(32) Priority Date :NA
(33) Name of priority country :NA
(86) International Application No :NA
Filing Date :NA
(87) International Publication No : NA
(61) Patent of Addition to Application Number :NA
Filing Date :NA
(62) Divisional to Application Number :NA
Filing Date :NA

(71)**Name of Applicant :**
1)SAMSUNG INDIA SOFTWARE OPERATIONS PVT. LTD.
Address of Applicant :BAGMANE LAKEVIEW, BLOCK 'B', NO. 66/1, BAGMANE TECH PARK, C.V. RAMAN NAGAR, BYRASANDRA, BANGALORE- 560093, Karnataka India
(72)**Name of Inventor :**
1)PIYUSH KUMAR RAI
2)DEBABRATA HAZARIKA
3)PRAMOD KUMAR NANDY

(57) Abstract :
A method and system for customizing display of data in communication device is provided. The method includes selecting a plurality of messages stored in the communication device. The method then displays data associated with the plurality of selected messages collectively on a display screen of the communication device. Thereafter information associated with each of the plurality of selected messages is viewed on the display screen of the communication device.

No. of Pages : 32 No. of Claims : 16

(12) PATENT APPLICATION PUBLICATION
(19) INDIA
(22) Date of filing of Application :15/10/2012
(21) Application No.4297/CHE/2012 A
(43) Publication Date : 14/03/2014

(54) Title of the invention : NON-SYMMETRICAL DIBENZODITHIENOTHIOPHENE COMPOUNDS

(51) International classification :C07D
(31) Priority Document No :13/274,484
(32) Priority Date :17/10/2011
(33) Name of priority country :U.S.A.
(86) International Application No :NA
Filing Date :NA
(87) International Publication No : NA
(61) Patent of Addition to Application Number :NA
Filing Date :NA
(62) Divisional to Application Number :NA
Filing Date :NA

(71)**Name of Applicant :**
1)XEROX CORPORATION
Address of Applicant :45 GLOVER AVENUE, P.O., BOX 4505, NORWALK, CONNECTICUT 06856-4505 U.S.A.
(72)**Name of Inventor :**
1)LIU, PING
2)WU, YILIANG
3)WIGGLESWORTH, ANTHONY

(57) Abstract :
Disclosed herein is an asymmetrical semiconducting compound of Formula (I): Formula (I) wherein R1 and R2 are as described herein. The compound is useful in a semiconducting layer for an electronic device, such as a thin-film transistor. Devices including the compound exhibit high mobility and excellent stability.

No. of Pages : 30 No. of Claims : 3

(12) PATENT APPLICATION PUBLICATION
(19) INDIA
(22) Date of filing of Application :06/09/2012
(21) Application No.7712/CHENP/2012 A
(43) Publication Date : 14/03/2014

(54) Title of the invention : COMPOUND CONTAINING PYRIDINE RING AND METHOD FOR PRODUCING HALOGENATED PICOLINE DERIVATIVE AND TETRAZOLYLOXIME DERIVATIVE

(51) International classification :C07D213/75,C07D401/12,C07D405/12
(31) Priority Document No :2010056718
(32) Priority Date :12/03/2010
(33) Name of priority country :Japan
(86) International Application No :PCT/JP2011/055809
Filing Date :11/03/2011
(87) International Publication No :WO 2011/111831
(61) Patent of Addition to Application Number :NA
Filing Date :NA
(62) Divisional to Application Number :NA
Filing Date :NA

(71)**Name of Applicant :**
1)Nippon Soda Co. Ltd.
Address of Applicant :2 1 Ohtemachi 2 chome Chiyoda ku Tokyo 1008165 Japan
(72)**Name of Inventor :**
1)MIYAZAKI Hidekazu
2)YANAKA Satoru
3)TSUBOKURA Shiro
4)SUGIURA Tadashi
5)NODA Kaoru
6)SUZUKI Kengo

(57) Abstract :
Disclosed is a compound containing pyridine ring that can be advantageously synthesized industrially. Also disclosed is an industrially advantageous method for producing the compound represented by formula (1) containing a pyridine ring this compound being useful as an intermediate for producing tetrazolyloxime derivatives that exhibit bactericidal activity. The method also industrially produces 2 substituted amino 6 halomethylpyridine derivatives and tetrazolyloxime derivatives advantageously. (In the formula R represents a C alkoxy group C alkoxy C alkoxy group or the like; R represents a C alkoxycarbonyl group acetyl group or the like; X represents a halogen atom; and n is an integer 0 3.)

No. of Pages : 79 No. of Claims : 10

(12) PATENT APPLICATION PUBLICATION
(19) INDIA
(22) Date of filing of Application :06/09/2012
(21) Application No.7714/CHENP/2012 A
(43) Publication Date : 14/03/2014

(54) Title of the invention : METALLURGICAL VESSEL AND METHOD FOR PRODUCING A WALL OF THE VESSEL

(51) International classification	:B22D2/00,B22D11/16,B22D11/18
(31) Priority Document No	:10 2010 007 221.4
(32) Priority Date	:09/02/2010
(33) Name of priority country	:Germany
(86) International Application No	:PCT/EP2011/050254
Filing Date	:11/01/2011
(87) International Publication No	:WO 2011/098309
(61) Patent of Addition to Application Number	:NA
Filing Date	:NA
(62) Divisional to Application Number	:NA
Filing Date	:NA

(71)**Name of Applicant :**
1)SMS SIEMAG AG
Address of Applicant :Eduard Schloemann Strae 4 40237 D¼sseldorf Germany
(72)**Name of Inventor :**
1)LIEFTUCHT Dirk
2)ARZBERGER Matthias

(57) Abstract :
The invention relates to a metallurgical vessel having a hollow chamber for treating a first liquid metal or for liquefying a metal said vessel comprising cooled wall plates (1) having a hot side facing the hollow chamber and a cold side facing away from the hollow chamber made of a second metal and which is provided with optical waveguides (5 6 7) for detecting data of the metallurgical vessel or of the first metal characterized in that the optical waveguides (5 6 7) are arranged in the region of the hot side close to the surface.

No. of Pages : 18 No. of Claims : 15

(12) PATENT APPLICATION PUBLICATION
(19) INDIA
(22) Date of filing of Application :06/09/2012
(21) Application No.7715/CHENP/2012 A
(43) Publication Date : 14/03/2014

(54) Title of the invention : COMMUNICATION SYSTEM CONTROL DEVICE COMMUNICATION METHOD AND PROGRAM

(51) International classification :H04L12/56
(31) Priority Document No :2010268401
(32) Priority Date :01/12/2010
(33) Name of priority country :Japan
(86) International Application No :PCT/JP2011/005106
Filing Date :12/09/2011
(87) International Publication No :WO 2012/073409
(61) Patent of Addition to Application Number :NA
Filing Date :NA
(62) Divisional to Application Number :NA
Filing Date :NA

(71)**Name of Applicant :**
1)NEC CORPORATION
Address of Applicant :7 1 Shiba 5 Chome Minato Ku Tokyo 1088001 Japan
(72)**Name of Inventor :**
1)AKIYOSHI Ippei

(57) Abstract :
An object is to lighten the load on a control device that centrally controls forwarding nodes thereunder. A communication system includes a plurality of forwarding nodes for which is set a processing rule(s) for forwarding a received packet in accordance with a route set in advance with a processing rule being selected based on a path identifier included in the received packet to perform packet forwarding; and a control device that sets the processing rule beforehand in the forwarding node in the route and causes a forwarding node positioned at a start point of said route to add a path identifier in accordance with said route to a received packet and causes a forwarding node positioned at an end point of said route to delete said path identifier from a received packet on a predetermined occasion.

No. of Pages : 37 No. of Claims : 10

(12) PATENT APPLICATION PUBLICATION
(19) INDIA
(22) Date of filing of Application :11/10/2012
(21) Application No.4250/CHE/2012 A
(43) Publication Date : 14/03/2014

(54) Title of the invention : RECORDING MEDIUM

(51) International classification :B41M5/00
(31) Priority Document No :2011-237516
(32) Priority Date :28/10/2011
(33) Name of priority country :Japan
(86) International Application No :NA
Filing Date :NA
(87) International Publication No : NA
(61) Patent of Addition to Application Number :NA
Filing Date :NA
(62) Divisional to Application Number :NA
Filing Date :NA

(71)**Name of Applicant :**
1)CANON KABUSHIKI KAISHA
Address of Applicant :3-30-2, SHIMOMARUKO, OHTA-KU, TOKYO Japan
(72)**Name of Inventor :**
1)TETSURO NOGUCHI
2)HISAO KAMO
3)YASUHIRO NITO
4)RYO TAGURI
5)ISAMU OGURI
6)OLIVIA HERLAMBANG
7)NAOYA HATTA
8)SHINYA YUMOTO

(57) Abstract :
A recording medium includes, in sequence, a support, a first ink-receiving layer, and a second ink-receiving layer, in which the first ink-receiving layer contains at least one selected from an alumina, an alumina hydrate, and a fumed silica, a polyvinyl alcohol, and a boric acid, in which a mass ratio of a content of the boric acid in the first ink-receiving layer to a content of the polyvinyl alcohol in the first ink-receiving layer is 2.0% by mass or more and 7.0% by mass or less, in which the second ink-receiving layer contains a fumed silica, a polyvinyl alcohol, and a boric acid, and in which a mass ratio of a content of the boric acid in the second ink-receiving layer to a content of the polyvinyl alcohol in the second ink-receiving layer is 10.0% by mass or more and 30.0% by mass or less.

No. of Pages : 68 No. of Claims : 6

(12) PATENT APPLICATION PUBLICATION
(19) INDIA
(22) Date of filing of Application :19/10/2012
(21) Application No.4368/CHE/2012 A
(43) Publication Date : 14/03/2014

(54) Title of the invention : TRAIN-POSITION LOCATING DEVICE AND TRAIN-POSITION LOCATING METHOD

(51) International classification	:B61L25/00
(31) Priority Document No	:2011-243505
(32) Priority Date	:07/11/2011
(33) Name of priority country	:Japan
(86) International Application No	:NA
Filing Date	:NA
(87) International Publication No	: NA
(61) Patent of Addition to Application Number	:NA
Filing Date	:NA
(62) Divisional to Application Number	:NA
Filing Date	:NA

(71)**Name of Applicant :**
1)MITSUBISHI ELECTRIC CORPORATION
Address of Applicant :7-3, MARUNOUCHI 2-CHOME, CHIYODA-KU, TOKYO 100-8310 Japan
(72)**Name of Inventor :**
1)TOKUMARU, MAKOTO

(57) Abstract :
A train-position locating device includes an onboard control device incorporated in a train and a ground control device installed on a ground. The onboard control device decides a track on which a train is present based on position information and a result of a nearest track search, transmits identification information for identifying the own train and track information to the ground control device, and shifts to an onboard-oriented train control mode when receiving a response indicating position is located from the ground control device. The ground control device transmits a response indicating tentative position is normal to the onboard control device when another train located to be present on a track is not present on the tentative position, and transmits the response indicating position is located to the onboard control device when a change from a previous track to the changed track is correct.

No. of Pages : 38 No. of Claims : 18

(12) PATENT APPLICATION PUBLICATION
(19) INDIA
(22) Date of filing of Application :19/10/2012
(21) Application No.4369/CHE/2012 A
(43) Publication Date : 14/03/2014

(54) Title of the invention : MEDIA DEPOSITORY

(51) International classification :G03G15/00
(31) Priority Document No :13/285,889
(32) Priority Date :31/10/2011
(33) Name of priority country :U.S.A.
(86) International Application No :NA
Filing Date :NA
(87) International Publication No : NA
(61) Patent of Addition to Application Number :NA
Filing Date :NA
(62) Divisional to Application Number :NA
Filing Date :NA

(71)**Name of Applicant :**
1)NCR CORPORATION
Address of Applicant :3097 SATELLITE BLVD., DULUTH, GEORGIA 30096 U.S.A.
(72)**Name of Inventor :**
1)THOMAS PETEREK
2)FRED KALLIN

(57) Abstract :
A method and apparatus are disclosed for providing an aligned bunch of items of media. The apparatus includes a driven drum element arranged to rotate about a drum axis of rotation and at least one driven endless belt member, each arranged along a respective belt pathway. The belt pathway comprises a pathway portion in which the belt member extends in a co-operating relationship with more than sixty per cent of the circumference of an outer surface of the drum element. The drum element and at least one belt member co-operate to receive and align items of media therebetween.

No. of Pages : 27 No. of Claims : 15

(12) PATENT APPLICATION PUBLICATION
(19) INDIA
(22) Date of filing of Application :06/09/2012
(21) Application No.7720/CHENP/2012 A
(43) Publication Date : 14/03/2014

(54) Title of the invention : INTERCONNECT COUPLED TO MASTER DEVICE VIA AT LEAST TWO DIFFERENT CONNECTIONS

(51) International classification :G06F13/40
(31) Priority Document No :12/720164
(32) Priority Date :09/03/2010
(33) Name of priority country :U.S.A.
(86) International Application No :PCT/US2011/027695
Filing Date :09/03/2011
(87) International Publication No :WO 2011/112682
(61) Patent of Addition to Application Number :NA
Filing Date :NA
(62) Divisional to Application Number :NA
Filing Date :NA

(71)**Name of Applicant :**
1)QUALCOMM INCORPORATED
Address of Applicant :Attn: International IP Administration 5775 Morehouse Drive San Diego California 92121 U.S.A.
(72)**Name of Inventor :**
1)WANG Feng

(57) Abstract :
An interconnect coupled to a master device via at least two different connections is disclosed. In a particular embodiment a system is disclosed that includes a first interconnect and a second interconnect coupled to the first interconnect. The first interconnect is coupled to a first master device via a single connection and the first interconnect is coupled to a second master device via at least two different connections. The second interconnect is coupled to a memory via a memory controller.

No. of Pages : 38 No. of Claims : 27

(12) PATENT APPLICATION PUBLICATION
(19) INDIA
(22) Date of filing of Application :06/09/2012
(21) Application No.7722/CHENP/2012 A
(43) Publication Date : 14/03/2014

(54) Title of the invention : DYNAMIC VIRTUAL ARTICULATOR

(51) International classification :A61C13/00
(31) Priority Document No :PA 2010 00156
(32) Priority Date :25/02/2010
(33) Name of priority country :Denmark
(86) International Application No :PCT/DK2011/050047
Filing Date :17/02/2011
(87) International Publication No :WO 2011/103876
(61) Patent of Addition to Application Number :NA
Filing Date :NA
(62) Divisional to Application Number :NA
Filing Date :NA

(71)**Name of Applicant :**
1)3SHAPE A/S
Address of Applicant :Holmens Kanal 7 4. DK 1060 Copenhagen K Denmark
(72)**Name of Inventor :**
1)KRISTENSEN Kasper Kabell
2)FISKER Rune
3)BARTHE Christophe Vasiljev
4)POULSEN Tommy Sanddal

(57) Abstract :
Disclosed is a computer implemented method of using a dynamic virtual articulator (208) for simulating occlusion of teeth (206) when performing computer aided designing of one or more dental restorations for a patient where the method comprises the steps of: providing the virtual articulator (208) comprising a virtual three dimensional model of the upper jaw (204) and a virtual three dimensional model of the lower jaw (205) resembling the upper jaw (204) and lower jaw (205) respectively of the patient s mouth; providing movement of the virtual upper jaw (205) and the virtual lower jaw (205) relative to each other for simulating dynamic occlusion whereby collisions between teeth in the virtual upper (204) and virtual lower jaw (205) occur; where in the method further comprises: providing that the teeth (206) in the virtual upper jaw (204) and virtual lower jaw (205) are blocked from penetrating each other s virtual surfaces in the collisions.

No. of Pages : 127 No. of Claims : 143

(12) PATENT APPLICATION PUBLICATION
(19) INDIA
(22) Date of filing of Application :14/05/2012
(21) Application No.4246/CHENP/2012 A
(43) Publication Date : 14/03/2014

(54) Title of the invention : AIRBAG DEVICE

(51) International classification :B60R21/231
(31) Priority Document No :2009-272684
(32) Priority Date :30/11/2009
(33) Name of priority country :Japan
(86) International Application No :PCT/JP2010/070945
Filing Date :24/11/2010
(87) International Publication No :WO 2011/065385 A1
(61) Patent of Addition to Application Number :NA
Filing Date :NA
(62) Divisional to Application Number :NA
Filing Date :NA

(71)**Name of Applicant :**
1)AUTOLIV DEVELOPMENT AB
Address of Applicant :SE-447 83 VARGARDA. Sweden
(72)**Name of Inventor :**
1)UJIIE, TOHRU

(57) Abstract :
The invention provides an airbag device that can be accommodated compactly. The airbag device according to the invention comprises an airbag capable of deploying by being inflated, and an inflator that supplies inflation gas to the airbag. The airbag includes a bag main body section that is shaped as a bag and mainly protects an occupant in a vehicle, and a pocket that is provided in part of the bag main body section and accommodates therein the bag main body section.

No. of Pages : 30 No. of Claims : 7

(12) PATENT APPLICATION PUBLICATION
(19) INDIA
(22) Date of filing of Application :19/10/2012
(21) Application No.4367/CHE/2012 A
(43) Publication Date : 14/03/2014

(54) Title of the invention : SWITCHING REGULATOR AND POWER SUPPPLY DEVICE INCLUDING THE SAME

(51) International classification :H01L
(31) Priority Document No :2011-236083
(32) Priority Date :27/10/2011
(33) Name of priority country :Japan
(86) International Application No :NA
Filing Date :NA
(87) International Publication No : NA
(61) Patent of Addition to Application Number :NA
Filing Date :NA
(62) Divisional to Application Number :NA
Filing Date :NA

(71)**Name of Applicant :**
1)SHARP KABUSHIKI KAISHA
Address of Applicant :22-22, NAGAIKE-CHO, ABENO-KU, OSAKA-SHI, OSAKA 545-8522 Japan
(72)**Name of Inventor :**
1)YOSHITSUGU KAIJIMA
2)YURI SUGAWARA

(57) Abstract :
A heat sink (11) comprised of a first heat dissipation portion (1 la), a second heat dissipation portion (1 lb), and a third heat dissipation portion (1 lc) is mounted on a circuit board (14). Two sets of an inductor (L1, L2) that constitute an interleaved power factor correction circuit are arranged in a spatial region formed in the inside of the heat sink and are mounted on the circuit board. Two sets of a transistor (Tr1, Tr2) and a diode (Dl, D2) that constitute the interleaved power factor correction circuit are attached to an outer surface of the first heat dissipation portion and are mounted on the circuit board.

No. of Pages : 23 No. of Claims : 7

(12) PATENT APPLICATION PUBLICATION
(19) INDIA
(22) Date of filing of Application :23/07/2012
(21) Application No.6487/CHENP/2012 A
(43) Publication Date : 14/03/2014

(54) Title of the invention : INFRARED SENSOR

(51) International classification :G01J5/20, G01J1/02
(31) Priority Document No :2009295857
(32) Priority Date :25/12/2009
(33) Name of priority country :Japan
(86) International Application No :PCT/JP2010/072436
Filing Date :14/12/2010
(87) International Publication No :WO 2011/078004 A1
(61) Patent of Addition to Application Number :NA
Filing Date :NA
(62) Divisional to Application Number :NA
Filing Date :NA

(71)**Name of Applicant :**
1)MITSUBISHI MATERIALS CORPORATION
Address of Applicant :3 2 Otemachi 1 chome Chiyoda ku Tokyo 1008117 Japan
(72)**Name of Inventor :**
1)NAKAMURA Kenzo
2)KITAGUCHI Makoto
3)ISHIKAWA Mototaka

(57) Abstract :
Disclosed is an infrared sensor which is able to obtain a large temperature difference between a heat sensitive element for infrared ray detection and a heat sensitive element for temperature compensation as well as has an inexpensive structure which is conducive to a compact assembly. The infrared sensor comprises an insulating film (2); a first heat sensitive element (3A) and a second heat sensitive element (3B) spaced apart from each other on one face of the insulating film (2); a pair of adhesive electrodes (4) formed on one face of the insulating film (2) to which the first heat sensitive element (3A) and the second heat sensitive element (3B) adhere respectively; an infrared absorbing film (5) arranged on the other face of the insulating film (2) opposite the first heat sensitive element (3A); and an infrared reflecting film (6) arranged on the other face of the insulating film (2) opposite the second heat sensitive element (3B). The first heat sensitive element (3A) and the second heat sensitive element (3B) have a tabular thermistor body (3a) and a pair of electrode layers formed respectively on front and back surfaces of the thermistor body (3a) with one of the electrode layers adhering to the adhesive electrode (4).

No. of Pages : 29 No. of Claims : 3

(12) PATENT APPLICATION PUBLICATION
(19) INDIA
(22) Date of filing of Application :07/09/2012
(21) Application No.7732/CHENP/2012 A
(43) Publication Date : 14/03/2014

(54) Title of the invention : SOLENOID DEVICE

(51) International classification :F16K31/06,H01F7/127,H01F7/16
(31) Priority Document No :2010-028509
(32) Priority Date :12/02/2010
(33) Name of priority country :Japan
(86) International Application No :PCT/JP2010/072446
Filing Date :14/12/2010
(87) International Publication No :WO 2011/099223 A1
(61) Patent of Addition to Application Number :NA
Filing Date :NA
(62) Divisional to Application Number :NA
Filing Date :NA

(71)**Name of Applicant :**
1)KEIHIN CORPORATION
Address of Applicant :26 2 Nishishinjuku 1 chome Shinjuku ku Tokyo 1630539 Japan
(72)**Name of Inventor :**
1)SAITO Masaki

(57) Abstract :
A solenoid device is provided in which a male thread (63) provided on an outer periphery of a guide tube (45 A) is screwed into a threaded hole (58) provided in a body (13) to fix the guide tube (45A) to the body (13), and a coil-side assembled unit (69A) formed by assembling in advance a bobbin (43A), a coil (44), a magnetic frame (48A), and a cover portion (49A) is fixed to the guide tube (45A) by press fitting the guide tube (45A) or a fixed core (46A) fixed to the guide tube (45A) into the magnetic frame (48A). Thus, the assembly of a bobbin, a coil, a cover portion integrally having a coupler part, and a magnetic frame onto a guide tube can be carried out with enhanced workability by means of a structure having fewer components and low cost, and the position of the coupler part in the peripheral direction of the guide tube can be easily and freely set.

No. of Pages : 45 No. of Claims : 8

(12) PATENT APPLICATION PUBLICATION
(19) INDIA
(22) Date of filing of Application :18/05/2009
(21) Application No.2762/CHENP/2009 A
(43) Publication Date : 14/03/2014

(54) Title of the invention : FUEL INJECTION VALVE DEVICE

(51) International classification :F02M 47/02
(31) Priority Document No :10 2006 049 830.5
(32) Priority Date :23/10/2006
(33) Name of priority country :Germany
(86) International Application No :PCT/EP2007/58914
Filing Date :28/08/2007
(87) International Publication No :(WO 2008/049665)
(61) Patent of Addition to Application Number :NA
Filing Date :NA
(62) Divisional to Application Number :NA
Filing Date :NA

(71)**Name of Applicant :**
1)ROBERT BOSCH GMBH
Address of Applicant :POSTFACH 30 02 20, 70442 STUTTGART Germany
(72)**Name of Inventor :**
1)STOECKLEIN, WOLFGANG
2)RAPP, HOLGER
3)RETTICH, ANDREAS

(57) Abstract :
The invention relates to a fuel injection valve device having a valve piston (42) which has a valve piston end (41) which bounds a valve control chamber (48) and which is guided in the axial direction in a guiding section (39). In order to create a fuel injection valve device that is simple to assemble and cost-effective to produce, the guided valve piston end (41) has a blind hole (54), extending in the axial direction, which is open to the valve control chamber (48).

No. of Pages : 9 No. of Claims : 8

(12) PATENT APPLICATION PUBLICATION
(19) INDIA
(22) Date of filing of Application :10/09/2012
(21) Application No.3728/CHE/2012 A
(43) Publication Date : 14/03/2014

(54) Title of the invention : DOUBLE DISC GRINDING MACHINE

(51) International classification	:B24B5/00	(71)**Name of Applicant :**
(31) Priority Document No	:NA	**1)SANSERA ENGINEERING PRIVATE LTD**
(32) Priority Date	:NA	Address of Applicant :NO.261/C, BEHIND NARAYANA
(33) Name of priority country	:NA	HRUDAYALAYA, HOSUR ROAD, ANEKAL TALUK,
(86) International Application No	:NA	BOMMASANDRA INDUSTRIAL AREA, BANGALORE - 560
Filing Date	:NA	099 Karnataka India
(87) International Publication No	: NA	(72)**Name of Inventor :**
(61) Patent of Addition to Application Number	:NA	**1)S. SEKHAR VASAN**
Filing Date	:NA	
(62) Divisional to Application Number	:NA	
Filing Date	:NA	

(57) Abstract :
A feeding mechanism includes a plurality of metal components, a clamping arrangement, a rotatable fixture holding the clamping arrangement, and a plunger associated with the rotatable fixture. One set of the plurality of metal components held by the clamping arrangement that is associated with the rotatable fixture, are fed through the plunger into a processing means. One set of the plurality of metal components are processed while another set of components are loaded onto the rotatable fixture using the clamping arrangement. Post processing of the one set of plurality of metal components, the plunger retracts and the rotatable fixture rotates to feed the another set of plurality of metal components into the processing means while the one set of plurality of metal components are unloaded from the clamping arrangement.

No. of Pages : 15 No. of Claims : 6

(12) PATENT APPLICATION PUBLICATION
(19) INDIA
(22) Date of filing of Application :07/09/2012
(21) Application No.7738/CHENP/2012 A
(43) Publication Date : 14/03/2014

(54) Title of the invention : FALLING FILM STRIPPER FOR CARBAMATE DECOMPOSITION

(51) International classification :B01D1/06,B01D1/14,B01D3/04
(31) Priority Document No :10153498.0
(32) Priority Date :12/02/2010
(33) Name of priority country :EPO
(86) International Application No:PCT/EP2011/050796
Filing Date :21/01/2011
(87) International Publication No :WO 2011/098335
(61) Patent of Addition to Application Number :NA
Filing Date :NA
(62) Divisional to Application Number :NA
Filing Date :NA

(71)**Name of Applicant :**
1)UREA CASALE SA
Address of Applicant :Via Giulio Pocobelli 6 CH 6900 Lugano Besso Switzerland
(72)**Name of Inventor :**
1)SCOTTO Andrea
2)VISCIOTTI Damiano

(57) Abstract :
N2A stripper (S) for carbamate decomposition and ammonia plus carbon dioxide recovery from a urea solution (U) is realized with a shell and tube heat exchanger where a liquid falling film of urea solution and a counter current gaseous flow of a stripping medium fed to a bundle of surface heated tubes (6); the stripping medium such as carbon dioxide is distributed into the tubes (6) by a plurality of gas risers (32); the gas risers are preferably associated to a perforated tray (30) in the bottom chamber (11) of the stripper. Revamping of a conventional CO stripper is also disclosed.

No. of Pages : 17 No. of Claims : 10

(12) PATENT APPLICATION PUBLICATION
(19) INDIA
(22) Date of filing of Application :07/09/2012
(21) Application No.7740/CHENP/2012 A
(43) Publication Date : 14/03/2014

(54) Title of the invention : PROCESSES USING AMINO ACID DEHYDROGENASES AND KETOREDUCTASE BASED COFACTOR REGENERATING SYSTEM

(51) International classification :C12P41/00,C12P13/04,C12N9/02
(31) Priority Document No :61/303179
(32) Priority Date :10/02/2010
(33) Name of priority country :U.S.A.
(86) International Application No :PCT/US2011/024102
Filing Date :08/02/2011
(87) International Publication No :WO 2011/100265
(61) Patent of Addition to Application Number :NA
Filing Date :NA
(62) Divisional to Application Number :NA
Filing Date :NA

(71)**Name of Applicant :**
1)CODEXIS INC.
Address of Applicant :200 Penobscot Drive Redwood City California 94063 U.S.A.
(72)**Name of Inventor :**
1)CABIROL Fabien L.
2)COLLIER Steven J.
3)DAUSSMANN Thomas
4)MODUKURU Naga

(57) Abstract :
The present disclosure relates to the use of an amino acid dehydrogenase in combination with a cofactor regenerating system comprising a ketoreductase. In particular embodiments the process can be used to prepare L tert leucine using a leucine dehydrogenase.

No. of Pages : 88 No. of Claims : 85

(12) PATENT APPLICATION PUBLICATION
(19) INDIA
(22) Date of filing of Application :07/09/2012
(21) Application No.7743/CHENP/2012 A
(43) Publication Date : 14/03/2014

(54) Title of the invention : METHOD AND SYSTEM FOR PROCESSING MEASUREMENT EVENTS IN MULTI CARRIER SYSTEM

(51) International classification :H04W24/10
(31) Priority Document No :201010178126.X
(32) Priority Date :06/05/2010
(33) Name of priority country :China
(86) International Application No :PCT/CN2010/077990
Filing Date :22/10/2010
(87) International Publication No :WO 2011/137632
(61) Patent of Addition to Application Number :NA
Filing Date :NA
(62) Divisional to Application Number :NA
Filing Date :NA

(71)**Name of Applicant :**
1)ZTE CORPORATION
Address of Applicant :ZTE Plaza Keji Road South Hi Tech Industrial Park Nanshan District Shenzhen Guangdong 518057 China
(72)**Name of Inventor :**
1)HUANG Yada

(57) Abstract :
The present invention provides a method and a system for processing a measurement event in a multi-carrier system. The method for processing a measurement event in a multi-carrier system comprises: a mobile terminal receives a measurement assignment configured and transmitted by a network side device (S302); the mobile terminal determines a serving cell and a neighbour cell corresponding to the received measurement assignment (S304); the mobile terminal measures the determined serving cell and neighbour cell (S306); and when a measurement result meets a report condition of a measurement event corresponding to the received measurement assignment, the mobile terminal reports the measurement result (S308). By configuring measurement events and assignments for different serving cells, the present invention solves the problem that a measurement event cannot distinguish between a primary serving cell and a secondary serving cell in the conventional art, thus the mobile terminal can implement measurement and reporting under the configuration of multiple serving cells.

No. of Pages : 32 No. of Claims : 13

(12) PATENT APPLICATION PUBLICATION
(19) INDIA
(22) Date of filing of Application :11/03/2009
(21) Application No.1399/CHENP/2009 A
(43) Publication Date : 14/03/2014

(54) Title of the invention : ANTI-OBESITY COMPOSITION CONTAINING ACACIA BARK DERIVATIVE

(51) International classification :A61K 36/48, A23K1/16
(31) Priority Document No :
(32) Priority Date : -
(33) Name of priority country :
(86) International Application No :PCT/JP2006/315864
Filing Date :10/08/2006
(87) International Publication No :(WO 2008/018139)
(61) Patent of Addition to Application Number :NA
Filing Date :NA
(62) Divisional to Application Number :NA
Filing Date :NA

(71)**Name of Applicant :**
1)WOOD ONE CO; LTD
Address of Applicant :1-1, MOKUZAIKOUMINAMI, HATSUKAICHI-SHI, HIROSHIMA, 7388502 Japan
(72)**Name of Inventor :**
1)NAKAMOTO, YUSHO
2)ONO, KEIKO

(57) Abstract :
It is intended to provide a composition having an excellent anti-obesity action without potential for adverse side effects and the like even if taken for a long period of time. The composition is an anti-obesity composition containing an acacia bark derivative.

No. of Pages : 28 No. of Claims : 13

(12) PATENT APPLICATION PUBLICATION
(19) INDIA
(22) Date of filing of Application :26/05/2009
(21) Application No.2928/CHENP/2009 A
(43) Publication Date : 14/03/2014

(54) Title of the invention : CONDENSING OPTICAL SYSTEM, LASER PROCESSING METHOD AND APPARATUS, AND MANUFACTURING METHOD OF BRITTLE MATERIAL BLANK

(51) International classification :B23K 26/08
(31) Priority Document No :2006-324439
(32) Priority Date :30/11/2006
(33) Name of priority country :Japan
(86) International Application No :PCT/JP07/73079
Filing Date :29/11/2007
(87) International Publication No :(WO 2008/069099)
(61) Patent of Addition to Application Number :NA
Filing Date :NA
(62) Divisional to Application Number :NA
Filing Date :NA

(71)**Name of Applicant :**
1)SUMITOMO ELECTRIC INDUSTRIES, LTD.
Address of Applicant :5-33, KITAHAMA 4-CHOME, CHUO-KU, OSAKA-SHI, OSAKA 541-0041 Japan
2)SUMITOMO ELECTRIC HARDMETAL CORP.
(72)**Name of Inventor :**
1)WATATANI, KENICHI,
2)KOBAYASHI, YUTAKA,
3)FUSE, KEIJI,

(57) Abstract :
A condensing optical system having a condensed light spot with a small size and a large focal depth without causing a problem of a decrease in intensity of the condensed light spot or discontinuity of an intensity distribution in front and rear areas of a focal position is provided. The condensing optical system that condenses a laser beam generated by a laser source at a predetermined focal length is designed to satisfy Expressions (a) to id), thereby producing 3rd and 5th spherical aberrations (a) 1 Z8 I ≥ 0.1λ or I Z15 I≥ 0.05λ, (b) Z8/Z15 ≥ 3 or Z8/Z15 < 1, (c) | Z8 I < 1.4λ,,and(d) IZ15 I <0.5λ, where X is a wavelength, Zs is an 8th coefficient of coefficients of the Zernike fringe polynomial of wavefront aberration corresponding to a 3rd order spherical aberration, and Z15 is a 15th coefficient of the coefficients of the Zernike fringe polynomial of wavefront aberration corresponding to a 5th spherical aberration.

No. of Pages : 68 No. of Claims : 14

(12) PATENT APPLICATION PUBLICATION
(19) INDIA
(22) Date of filing of Application :22/10/2012
(21) Application No.4400/CHE/2012 A
(43) Publication Date : 14/03/2014

(54) Title of the invention : VEHICLE LAMP

(51) International classification :F21V7/00
(31) Priority Document No :2011-236696
(32) Priority Date :28/10/2011
(33) Name of priority country :Japan
(86) International Application No :NA
Filing Date :NA
(87) International Publication No : NA
(61) Patent of Addition to Application Number :NA
Filing Date :NA
(62) Divisional to Application Number :NA
Filing Date :NA

(71)**Name of Applicant :**
1)KOITO MANUFACTURING CO., LTD.
Address of Applicant :8-3, TAKANAWA 4-CHOME, MINATO-KU, TOKYO 108-8711 Japan
(72)**Name of Inventor :**
1)TAJIMA, TAKEHIKO
2)MATSUMOTO, AKINORI

(57) Abstract :
A vehicle lamp (10) is provided with: a projection lens (18); a light source (12a); a reflector (14) that reflects light from the light source (12a) to the projection lens (18); and a shade member (20M). A shade member (20M) includes an opening (20a), and a portion of an inner peripheral edge of the opening (20a) is defined by an upper edge (20a1) of a shading part (20P) for shielding a portion of the light reflected on the reflector (14). A side end portion (14a1) of a reflection surface (14a) of the reflector (14) penetrates the opening (20a) of the shade member (20M) and extends forward beyond the shading part (20P).

No. of Pages : 21 No. of Claims : 3

(12) PATENT APPLICATION PUBLICATION
(19) INDIA
(22) Date of filing of Application :07/09/2012
(21) Application No.7770/CHENP/2012 A
(43) Publication Date : 14/03/2014

(54) Title of the invention : VALUE TRANSFER WITH IDENTITY DATABASE

(51) International classification :G06Q20/00,G06Q40/00
(31) Priority Document No :61/359791
(32) Priority Date :29/06/2010
(33) Name of priority country :U.S.A.
(86) International Application No :PCT/US2011/042214
Filing Date :28/06/2011
(87) International Publication No :WO 2012/006102
(61) Patent of Addition to Application Number :NA
Filing Date :NA
(62) Divisional to Application Number :NA
Filing Date :NA

(71)**Name of Applicant :**
1)VISA INTERNATIONAL SERVICE ASSOCIATION
Address of Applicant :P.O. Box 8999 M1 11F San Francisco California 94128 U.S.A.
(72)**Name of Inventor :**
1)PASHA Amer
2)LAASI Amyn
3)GLADKAYA Elena
4)PATEL Bharatkumar
5)BOUNTRA Sachin

(57) Abstract :
A value transfer system and methods are disclosed. A sending entity may initiate a cross border value transfer by authenticating with an authentication system where the authentication system communicates with an identity database populated with profiles for the sending entity and a recipient entity that contain government data where the government data is used in the authentication process.

No. of Pages : 33 No. of Claims : 20

(12) PATENT APPLICATION PUBLICATION
(19) INDIA
(22) Date of filing of Application :07/09/2012
(21) Application No.7772/CHENP/2012 A
(43) Publication Date : 14/03/2014

(54) Title of the invention : TRUSTED INTERNAL INTERFACE

(51) International classification :G06Q20/00
(31) Priority Document No :61/350719
(32) Priority Date :02/06/2010
(33) Name of priority country :U.S.A.
(86) International Application No :PCT/US2011/038817
Filing Date :01/06/2011
(87) International Publication No :WO 2011/153281
(61) Patent of Addition to Application Number :NA
Filing Date :NA
(62) Divisional to Application Number :NA
Filing Date :NA

(71)**Name of Applicant :**
1)VISA INTERNATIONAL SERVICE ASSOCIATION
Address of Applicant :P.O. Box 8999 San Francisco California 94128 8999 U.S.A.
(72)**Name of Inventor :**
1)MAKHOTIN Oleg
2)HILL Trudy
3)WONG Erick
4)MAKARENKO Oleg
5)NGO Hao
6)AABYE Christian
7)THAW William Alexander

(57) Abstract :
An interface and device architecture for a payment device. An interface between a payment application installed in a payment device and one or more value add applications (such as loyalty programs transit applications etc.) that are also installed in the payment device. The API or interface design permits communications and data transfer between the payment application and one or more value add applications. This reduces (and in some cases may prevent) the need for back end server processing of data that may be relevant to both a payment transaction and to a function of the value add application. Similarly the same or another API or interface may enable communications and data transfer between a value add application and the payment application.

No. of Pages : 45 No. of Claims : 20

(12) PATENT APPLICATION PUBLICATION
(19) INDIA
(22) Date of filing of Application :29/10/2012
(21) Application No.4492/CHE/2012 A
(43) Publication Date : 14/03/2014

(54) Title of the invention : CABINET WITH MODULES HAVING A THERMOSIPHON COOLER ARRANGEMENT

(51) International classification :H05K
(31) Priority Document No :11187277.6
(32) Priority Date :31/10/2011
(33) Name of priority country :EPO
(86) International Application No :NA
Filing Date :NA
(87) International Publication No : NA
(61) Patent of Addition to Application Number :NA
Filing Date :NA
(62) Divisional to Application Number :NA
Filing Date :NA

(71)**Name of Applicant :**
1)ABB TECHNOLOGY AG
Address of Applicant :AFFOLTERNSTRASSE 44, CH-8050 ZURICH Switzerland
(72)**Name of Inventor :**
1)COTTET, DIDIER
2)AGOSTINI, FRANCESCO
3)GRADINGER, THOMAS
4)VOGELI, ANDREAS

(57) Abstract :
The present invention relates to the cooling of electric and/or electronic components, in particular to an electric and/or electronic system (200) with a cabinet (400), which comprises a cabinet housing (406) comprising a first aperture for receiving a stream of cooling air. The cabinet housing (406) comprises a second aperture for releasing the cooling air thereafter in an operating state of the cabinet. At least two modules (102), each comprising a guiding structure with an inlet and an outlet are provided in the cabinet. The at least two modules (102) are arranged in the cabinet housing (406) such that a branch of the major portion of cooling air flowing through the first aperture of said cabinet housing (406) is enabled to flow into each module (102) via the inlet guided by the guiding structure through the dedicated module (102) to the outlet and thereafter through the second aperture out of the cabinet housing (406).

No. of Pages : 64 No. of Claims : 21

(12) PATENT APPLICATION PUBLICATION
(19) INDIA
(22) Date of filing of Application :29/10/2012
(21) Application No.4495/CHE/2012 A
(43) Publication Date : 14/03/2014

(54) Title of the invention : MODEL-BASED LOAD DEMAND CONTROL

(51) International classification :G05B
(31) Priority Document No :13/285,072
(32) Priority Date :31/10/2011
(33) Name of priority country :U.S.A.
(86) International Application No :NA
Filing Date :NA
(87) International Publication No : NA
(61) Patent of Addition to Application Number :NA
Filing Date :NA
(62) Divisional to Application Number :NA
Filing Date :NA

(71)**Name of Applicant :**
1)EMERSON PROCESS MANAGEMENT POWER & WATER SOLUTIONS, INC.
Address of Applicant :200 BETA DRIVE, PITTSBURGH, PENNSYLVANIA 15238 U.S.A.
(72)**Name of Inventor :**
1)BEVERIDGE, ROBERT ALLEN

(57) Abstract :
Embodiments of methods and systems for controlling a load generated by a power generating system may include controlling at least a portion of the system using model-based control techniques. The model-based control techniques may include a dynamic matrix controller (DMC) that receives a load demand and a process variable as inputs and generates a control signal based on the inputs and a stored model. The model may be configured based on parametric testing, and may be modifiable. Other inputs may also be used to determine the control signal. In an embodiment, a turbine is controlled by a first DMC and a boiler is controlled by a second DMC, and the control signals generated by the first and the second DMCs are used in conjunction to control the generated load. Techniques to move the power generating system from Proportional-Integral-Derivative based control to model-based control are also disclosed.

No. of Pages : 50 No. of Claims : 32

(12) PATENT APPLICATION PUBLICATION
(19) INDIA
(22) Date of filing of Application :28/08/2012
(21) Application No.7448/CHENP/2012 A
(43) Publication Date : 14/03/2014

(54) Title of the invention : INVERTER DEVICE AND CONTROL METHOD THEREOF

(51) International classification :H02M7/48
(31) Priority Document No :2010-046046
(32) Priority Date :03/03/2010
(33) Name of priority country :Japan
(86) International Application No :PCT/JP2010/072616
Filing Date :16/12/2010
(87) International Publication No :WO 2011/108169 A1
(61) Patent of Addition to Application Number :NA
Filing Date :NA
(62) Divisional to Application Number :NA
Filing Date :NA

(71)**Name of Applicant :**
1)KABUSHIKI KAISHA YASKAWA DENKI
Address of Applicant :2 1 Kurosaki shiroishi Yahatanishi ku Kitakyushu shi Fukuoka 8060004 Japan
(72)**Name of Inventor :**
1)TAKAKI Mamoru
2)MORIMOTO Shinya
3)HISATSUNE Masaki

(57) Abstract :
Disclosed is an inverter device not requiring a voltage detection circuit and capable of compensating for voltage error caused by factors other than dead time. The disclosed inverter device is provided with: a power unit which controls PWM of voltage commands to the motor for each set time period converts DC power to AC power and outputs the same; a voltage command generation unit which generates voltage commands at a period N times longer than said time period (N1); an interval determination unit which generates a interval determination signal which is ON during one half period of a time period and OFF during the next half period; a current detection unit which when the interval determination signal changes detects the current of the motor; and a voltage correction unit which generates a voltage correction value such that the amount of change of the detected current when the interval determination signal is OFF and the amount of change when ON are the same and corrects the voltage command.

No. of Pages : 38 No. of Claims : 13

(12) PATENT APPLICATION PUBLICATION
(19) INDIA
(22) Date of filing of Application :10/09/2012
(21) Application No.7792/CHENP/2012 A
(43) Publication Date : 14/03/2014

(54) Title of the invention : EFFICIENT RESOURCE UTILIZATION IN TDD

(51) International classification :H04W72/04,H04L5/00
(31) Priority Document No :61/316689
(32) Priority Date :23/03/2010
(33) Name of priority country :U.S.A.
(86) International Application No :PCT/US2011/029670
Filing Date :23/03/2011
(87) International Publication No :WO 2011/119765
(61) Patent of Addition to Application Number :NA
Filing Date :NA
(62) Divisional to Application Number :NA
Filing Date :NA

(71)**Name of Applicant :**
1)QUALCOMM INCORPORATED
Address of Applicant :5775 Morehouse Drive San Diego California 92121 U.S.A.
(72)**Name of Inventor :**
1)ZHANG Xiaoxia
2)MALLADI Durga Prasad
3)WEI Yongbin
4)LUO Tao
5)CHEN Wanshi

(57) Abstract :
In a wireless communication system unused resource elements are utilized to transmit additional pilot and control signals. The additional pilot and control signals may mitigate the impact of interference. The unused resource elements may be in a downlink pilot timeslot (DwPTS) in a time division duplex system.

No. of Pages : 34 No. of Claims : 36

(12) PATENT APPLICATION PUBLICATION
(19) INDIA
(22) Date of filing of Application :25/01/2011
(21) Application No.235/CHE/2011 A
(43) Publication Date : 14/03/2014

(54) Title of the invention : INTEGRATED PORTABLE LPG BUNKER CUM FUEL SYSTEM FOR MARINE VEHICLES

(51) International classification :F17C
(31) Priority Document No :NA
(32) Priority Date :NA
(33) Name of priority country :NA
(86) International Application No :NA
Filing Date :NA
(87) International Publication No : NA
(61) Patent of Addition to Application Number :NA
Filing Date :NA
(62) Divisional to Application Number :NA
Filing Date :NA

(71)**Name of Applicant :**
1)SREE LPG PRIVATE LTD.
Address of Applicant :#230 Sharada Complex Gokulam II Stage 1st Main Road Mysore 570002 Karnataka India
(72)**Name of Inventor :**
1)SHYAMANUR SANJAY

(57) Abstract :
The present invention provides an integrated portable liquefied petroleum gas (LPG) bunker cum fuel system for marine vehicles. In one embodiment, a portable LPG bunker includes three fuel tanks adapted for storing LPG, and three multi-function valves disposed on the three fuel tanks and for withdrawing a desired amount of the stored LPG in a vapour form from the respective one of the three fuel tanks. The bunker further includes a solenoid valve connected to each of the three multifunction valves and adapted for supplying the withdrawn LPG in vapour form when the engine is turned ON, a pressure regulator connected to the solenoid valve and adapted for reducing the pressure of the withdrawn LPG in vapour form to a standard pressure, and a prime control unit connected to the pressure regulator and adapted for providing a required amount of the vapour LPG to an engine of the marine vehicle.

No. of Pages : 13 No. of Claims : 11

(12) PATENT APPLICATION PUBLICATION
(19) INDIA
(22) Date of filing of Application :12/09/2012
(21) Application No.3790/CHE/2012 A
(43) Publication Date : 14/03/2014

(54) Title of the invention : IRON - ESSENTIAL FOR FLORA AND FAUNA

(51) International classification :A01N57/00
(31) Priority Document No :NA
(32) Priority Date :NA
(33) Name of priority country :NA
(86) International Application No :NA
Filing Date :NA
(87) International Publication No : NA
(61) Patent of Addition to Application Number :NA
Filing Date :NA
(62) Divisional to Application Number :NA
Filing Date :NA

(71)**Name of Applicant :**
1)S. SUNDARESAN
Address of Applicant :46/4-SUSHANTHA APARTMENT, 53RD STREET, ASHOK NAGAR, CHENNAI - 600 083 Tamil Nadu India
(72)**Name of Inventor :**
1)S. SUNDARESAN

(57) Abstract :
The present invention relates to a chelated fertilizer composition for enriching Iron and Phosphorus content in agriculture/horticulture crops and plants through foliar application. The fertilizer composition is prepared using compounds comprising chelating agent and Ferric Oxide (Fe2O3). The chelation of Fe by disodium salt of Hydroxy Ethylidene Di Phosphonic Acid (Na2 HEDP) developed 17% to 18% Fe-HEDP and 31% Phosphorus pentoxide (P2O5). The final chelated fertilizer composition obtained is in powder form and is 100% water-soluble concentrate. The chelated fertilizer composition can be used to cure Iron and Phosphorus deficiency in crops and plants, increase yield with more Iron and Phosphorus content, thus reducing the risk of Iron and Phosphorus deficiency in humans.

No. of Pages : 18 No. of Claims : 7

(12) PATENT APPLICATION PUBLICATION
(19) INDIA
(22) Date of filing of Application :13/09/2012
(21) Application No.3791/CHE/2012 A
(43) Publication Date : 14/03/2014

(54) Title of the invention : DYNAMIC HITLESS RESIZING IN OPTICAL TRANSPORT NETWORK

(51) International classification :H04J3/00
(31) Priority Document No :NA
(32) Priority Date :NA
(33) Name of priority country :NA
(86) International Application No :NA
Filing Date :NA
(87) International Publication No : NA
(61) Patent of Addition to Application Number :NA
Filing Date :NA
(62) Divisional to Application Number :NA
Filing Date :NA

(71)**Name of Applicant :**
1)TEJAS NETWORKS LIMITED
Address of Applicant :PLOT NO: 25, JP SOFTWARE PARK, ELECTRONIC CITY, PHASE 1, HOSUR ROAD, BANGALORE - 560 100 Karnataka India
(72)**Name of Inventor :**
1)NISHANT SHARMA
2)NIKHIL KUMAR SATYARTHI

(57) Abstract :
The present invention and its embodiments are made to provide for dynamic hitless resizing in optical transport network without any identification of matching time slots by the Network Management System (NMS) or any control plane signaling including Generalised Multi Protocol Label Switching(GMPLS). An aspect of the invention provides for a method of hitless ODUflex connection resizing in an optical transport network by incrementing or decrementing the ODUflex connection between the nodes, based on an indication command given to a source node for bandwidth increase or decrease, by identifying and matching at least one time slot through Link Connection Resizing (LCR) protocol message exchanges. Another aspect of the invention provides for a method of hitless ODUflex connection resizing in an optical transport network by decrementing the matching time slot used for the incrementing operation, in case of unsuccessful incrementing operation between nodes.

No. of Pages : 31 No. of Claims : 7

(12) PATENT APPLICATION PUBLICATION
(19) INDIA
(22) Date of filing of Application :10/09/2012
(21) Application No.7800/CHENP/2012 A
(43) Publication Date : 14/03/2014

(54) Title of the invention : MOVABLE BLADE NOT IMPAIRING DURABILITY OF STATIONARY BLADE PAPER SHEET CUTTING DEVICE WITH MOVABLE BLADE AND PRINTER WITH PAPER SHEET CUTTING DEVICE

(51) International classification :B26D1/00,B26D1/08,B41J11/70
(31) Priority Document No :2010193168
(32) Priority Date :31/08/2010
(33) Name of priority country :Japan
(86) International Application No :PCT/JP2011/054823
Filing Date :24/02/2011
(87) International Publication No:WO 2012/029338
(61) Patent of Addition to Application Number :NA
Filing Date :NA
(62) Divisional to Application Number :NA
Filing Date :NA

(71)**Name of Applicant :**
1)NEC Infrontia Corporation
Address of Applicant :2 6 1 Kitamikata Takatsu ku Kawasaki shi Kanagawa 2138511 Japan
(72)**Name of Inventor :**
1)YAZAWA Shou
2)YOSHIOKA Yukio

(57) Abstract :
Provided is a movable blade including, at a part including a movable blade leading edge which engages with a stationary blade, a blade edge portion which is thinned toward the movable blade leading edge. The blade edge portion is formed by shaving.

No. of Pages : 20 No. of Claims : 10

(12) PATENT APPLICATION PUBLICATION
(19) INDIA
(22) Date of filing of Application :10/09/2012
(21) Application No.7802/CHENP/2012 A
(43) Publication Date : 14/03/2014

(54) Title of the invention : PRINTER CAPABLE OF PREVENTING PAPER JAM

(51) International classification :B41J15/04,B41J29/46,B65H23/032
(31) Priority Document No :2010191657
(32) Priority Date :30/08/2010
(33) Name of priority country :Japan
(86) International Application No :PCT/JP2011/054822
Filing Date :24/02/2011
(87) International Publication No :WO 2012/029337
(61) Patent of Addition to Application Number :NA
Filing Date :NA
(62) Divisional to Application Number :NA
Filing Date :NA

(71)**Name of Applicant :**
1)NEC Infrontia Corporation
Address of Applicant :2 6 1 Kitamikata Takatsu ku Kawasaki shi Kanagawa 2138511 Japan
(72)**Name of Inventor :**
1)YAZAWA Shou
2)YOSHIOKA Yukio

(57) Abstract :
Disclosed is a printer including a transverse tension sensor for detecting that a sheet being discharged has deviated in a paper width direction orthogonal to a discharging direction. The conveyance of the sheet is stopped based on a detection signal of the transverse tension sensor.

No. of Pages : 36 No. of Claims : 10

(12) PATENT APPLICATION PUBLICATION
(19) INDIA
(22) Date of filing of Application :10/09/2012
(21) Application No.7803/CHENP/2012 A
(43) Publication Date : 14/03/2014

(54) Title of the invention : DEVICE FOR THERMALLY TREATING SUBSTRATES

(51) International classification :H01L21/00
(31) Priority Document No :10 2010 008 084.5
(32) Priority Date :15/02/2010
(33) Name of priority country :Germany
(86) International Application No :PCT/EP2011/000680
Filing Date :14/02/2011
(87) International Publication No :WO 2011/098295
(61) Patent of Addition to Application Number :NA
Filing Date :NA
(62) Divisional to Application Number :NA
Filing Date :NA

(71)**Name of Applicant :**
1)LEYBOLD OPTICS GMBH
Address of Applicant :Siemensstr. 88 63755 Alzenau Germany
2)SAINT GOBAIN GLASS FRANCE
(72)**Name of Inventor :**
1)CASPARI Andreas
2)HENKEL Stefan
3)TRUBE Jutta
4)STILLE Sven
5)FRFANGER Martin

(57) Abstract :
Heat-treatment inner-chamber (3) for thermal-processing of a substrate (20) under application of Selenium, with walls (10) which encircle the heat-treatment inner-chamber (3), with a bedding-device (8) for bedding/placement of the substrate(20) during the thermal-processing and with an energy-source (11) for bringing-in energy in the inner-chamber (24) of the heat-treatment inner-chamber (3), where at least a wall (10) or a portion of the inner-sides of the walls (10) of the heat-treatment inner- chamber (3) are designed for reflection of energy brought-in by the energy- source (11), is thereby characterized that at least a portion of the wall (10) or the inner-sides of the walls (10) are made of high temperature-resistant, Selenium-proof and highly-reflecting at least infra-red radiation Nitrides, titanium-nitride, silicium-nitride or diffuse-high-reflecting thermoplastic or include these.

No. of Pages : 20 No. of Claims : 17

(12) PATENT APPLICATION PUBLICATION
(19) INDIA
(22) Date of filing of Application :10/09/2012
(21) Application No.7804/CHENP/2012 A
(43) Publication Date : 14/03/2014

(54) Title of the invention : BALANCER

(51) International classification :F16F15/36,F16F15/32
(31) Priority Document No :2010035468
(32) Priority Date :19/02/2010
(33) Name of priority country :Japan
(86) International Application No :PCT/JP2010/005943
Filing Date :04/10/2010
(87) International Publication No :WO 2011/101932
(61) Patent of Addition to Application Number :NA
Filing Date :NA
(62) Divisional to Application Number :NA
Filing Date :NA

(71)**Name of Applicant :**
1)YAMAMOTO Hiroaki
Address of Applicant :son enji 4 4 31 Hirakata shi Osaka 5730112 Japan
(72)**Name of Inventor :**
1)YAMAMOTO Hiroaki

(57) Abstract :
Provided is a balancer wherein the dynamic unbalance of a rotating body for various kinds of machine tools can be corrected at the same level as the correction of the dynamic unbalance of a rotating body which rotates at a high speed even if the rotating body rotates at a low speed. The balancer is comprised of a plurality of weights (40) having the same mass and the same shape and weight holders (21 22) in which a plurality of storage chambers (30) are provided said storage chambers storing the respective weights so that each weight can oscillate in an arbitrary direction. The balancer is attached to a rotating body via an attaching portion (23) and can integrally rotate about the rotation axis of the rotating body. Each weight has a shape similar to and smaller than the shape of each storage chamber. Each storage chamber is a cylindrical space extending along the central axis of the storage chamber and both end faces perpendicular to the central axis of each storage chamber have a concave curve. The storage chambers are positioned so that the middle points of the central axes of the storage chambers are contact points in the circumference of one circle centering around the rotation axis in an arbitrary plane perpendicular to the rotation axis and the storage chambers are rotationally symmetric with respect to the rotation axis.

No. of Pages : 40 No. of Claims : 3

(12) PATENT APPLICATION PUBLICATION
(19) INDIA
(22) Date of filing of Application :10/09/2012
(21) Application No.7806/CHENP/2012 A
(43) Publication Date : 14/03/2014

(54) Title of the invention : DISPLAY DEVICE

(51) International classification :G09G3/36,G02F1/133,G09G3/20
(31) Priority Document No :2010034372
(32) Priority Date :19/02/2010
(33) Name of priority country :Japan
(86) International Application No :PCT/JP2011/052587
Filing Date :08/02/2011
(87) International Publication No :WO 2011/102260
(61) Patent of Addition to Application Number :NA
Filing Date :NA
(62) Divisional to Application Number :NA
Filing Date :NA

(71)**Name of Applicant :**
1)SHARP KABUSHIKI KAISHA
Address of Applicant :22 22 Nagaike cho Abeno ku Osaka shi Osaka 5458522 Japan
(72)**Name of Inventor :**
1)UEKI Shun
2)NAKAMURA Kohzoh
3)TOMIZAWA Kazunari
4)MORI Tomohiko
5)YOSHIDA Yuichi

(57) Abstract :
A display device (100) according to the present invention includes a pixel defined by a plurality of sub pixels. The plurality of sub pixels are a red sub pixel (R) to display red, a green sub pixel (G) to display green, a blue sub pixel (B) to display blue, and a yellow sub pixel (Ye) to display yellow. When an input signal corresponding to green of the sRGB color space is externally input, the display device (100) according to the present invention provides display by use of the green sub pixel (G) and also the yellow sub pixel (Ye). According to the present invention, a multiple primary color display device which suppresses decline of the display quality when an input signal corresponding to green of the sRGB color space is externally input is provided.

No. of Pages : 92 No. of Claims : 21

(12) PATENT APPLICATION PUBLICATION
(19) INDIA
(22) Date of filing of Application :31/03/2008
(21) Application No.781/CHE/2008 A
(43) Publication Date : 14/03/2014

(54) Title of the invention : ENGINE BREATHING SYSTEM

(51) International classification :F01M
(31) Priority Document No :NA
(32) Priority Date :NA
(33) Name of priority country :NA
(86) International Application No :NA
Filing Date :NA
(87) International Publication No : NA
(61) Patent of Addition to Application Number :NA
Filing Date :NA
(62) Divisional to Application Number :NA
Filing Date :NA

(71)**Name of Applicant :**
1)TVS MOTOR COMPANY LIMITED
Address of Applicant :JAYALAKSHMI ESTATES, NO.24,(OLD NO.8), HADDOWS ROAD, CHENNAI-6 Tamil Nadu India
(72)**Name of Inventor :**
1)KRISHNABHATTA NAGARAJA
2)CHITHAMBARAM SUBRAMONIAM
3)RAMADASS SAMBATHKUMAR

(57) Abstract :
A breather system for an internal combustion engine comprising a breather chamber provided with a plurality of deflector ribs, said chamber receiving oil mist carried by the camshaft operating chain; a member forming an enclosure for sealing the said chamber, the ribs being opened at suitable locations to allow fumes to reach the top surface of the said chamber; a hole provided at the topmost point of the said chamber; and a tube whose one end is connected to the hole, with its other end connected to the air filter of the said engine, for enabling the suspended impurities in the fumes to be filtered off and the residual filtered air to be released to atmosphere.

No. of Pages : 8 No. of Claims : 2

(12) PATENT APPLICATION PUBLICATION
(19) INDIA
(22) Date of filing of Application :10/09/2012
(21) Application No.7811/CHENP/2012 A
(43) Publication Date : 14/03/2014

(54) Title of the invention : METHOD FOR PRODUCING 1 AMINO 1 ALKOXYCARBONYL 2 VINYLCYCLOPROPANE

(51) International classification	:C07C67/343,C07C67/313,C07C69/743
(31) Priority Document No	:2010-031322
(32) Priority Date	:16/02/2010
(33) Name of priority country	:Japan
(86) International Application No	:PCT/JP2011/053285
Filing Date	:16/02/2011
(87) International Publication No	:WO 2011/102388 A1
(61) Patent of Addition to Application Number	:NA
Filing Date	:NA
(62) Divisional to Application Number	:NA
Filing Date	:NA

(71)**Name of Applicant :**
1)API CORPORATION
Address of Applicant :4 9 Hiranomachi 2 chome Chuo ku Osaka shi Osaka 5410046 Japan
(72)**Name of Inventor :**
1)ASUMA Yuuki
2)SUZUKI Tatsuya
3)TAKEHARA Jun
4)HIDAKA Tsugihiko
5)ASADA Kuniko
6)MIYAKE Ryoma
7)DEKISHIMA Yasumasa
8)KAWABATA Hiroshi

(57) Abstract :
It is an object of the present invention to provide a novel method for producing (lR,2S)/(lS,2R)-l-amino-l-alkoxycarbonyl-2-vinylcyclopropane which is useful as a synthetic intermediate of therapeutic agents for hepatitis C and a synthetic intermediate thereof. According to the present invention, when a trans-2-butene derivative having a leaving group at each of the 1- and 4-positions is reacted with a malonic ester in the presence of a base, a specific amount of an alkali metal alkoxide or an alkali metal hydride is used as the base, and further a specific amount of a malonic ester is used to produce a cyclopropane diester, and further, chiral or achiral 1 -amino- l-alkoxy-carbonyl-2-vinylcyclopropane and a salt thereof are synthesized using the cyclopropane diester.

No. of Pages : 85 No. of Claims : 18

(12) PATENT APPLICATION PUBLICATION
(19) INDIA
(22) Date of filing of Application :10/09/2012
(21) Application No.7812/CHENP/2012 A
(43) Publication Date : 14/03/2014

(54) Title of the invention : DATA CENTER USING WIRELESS COMMUNICATION

(51) International classification :G06F13/14,G06F15/16
(31) Priority Document No :12/753913
(32) Priority Date :05/04/2010
(33) Name of priority country :U.S.A.
(86) International Application No :PCT/US2011/030050
Filing Date :25/03/2011
(87) International Publication No :WO 2011/126775
(61) Patent of Addition to Application Number :NA
Filing Date :NA
(62) Divisional to Application Number :NA
Filing Date :NA

(71)**Name of Applicant :**
1)MICROSOFT CORPORATION
Address of Applicant :One Microsoft Way Redmond WA 98052 6399 U.S.A.
(72)**Name of Inventor :**
1)SHIN Ji Yong
2)KIROVSKI Darko
3)HARPER III David T.

(57) Abstract :
A data center includes a plurality of computing units that communicate with each other using wireless communication such as high frequency RF wireless communication. The data center may organize the computing units into groups (e.g. racks). In one implementation each group may form a three dimensional structure such as a column having a free space region for accommodating intra group communication among computing units. The data center can include a number of features to facilitate communication including dual use memory for handling computing and buffering tasks failsafe routing mechanisms provisions to address permanent interface and hidden terminal scenarios etc.

No. of Pages : 41 No. of Claims : 15

(12) PATENT APPLICATION PUBLICATION
(19) INDIA
(22) Date of filing of Application :10/09/2012
(21) Application No.7813/CHENP/2012 A
(43) Publication Date : 14/03/2014

(54) Title of the invention : VIRTUAL APPLICATION EXTENSION POINTS

(51) International classification :G06F9/44
(31) Priority Document No :12/754623
(32) Priority Date :06/04/2010
(33) Name of priority country :U.S.A.
(86) International Application No :PCT/US2011/030053
Filing Date :25/03/2011
(87) International Publication No :WO 2011/126776
(61) Patent of Addition to Application Number :NA
Filing Date :NA
(62) Divisional to Application Number :NA
Filing Date :NA

(71)**Name of Applicant :**
1)MICROSOFT CORPORATION
Address of Applicant :One Microsoft Way Redmond WA 98052 6399 U.S.A.
(72)**Name of Inventor :**
1)SHEEHAN John M.
2)REIERSON Kristofer H.

(57) Abstract :
A virtual application may be configured with several extension points within a host operating system. The virtual application may be configured with a private namespace in which various components such as registry settings dynamic linked libraries and other components may reside. During configuration links may be placed in the host operating system that may point to objects in the virtual application s private namespace so that the operating system and other applications may launch control or otherwise interact with the virtual application. The links may be located in a file system registry or other locations and may be available to other applications including other virtual applications. A configuration routine may place the links into the host operating system at the time the application may be configured.

No. of Pages : 19 No. of Claims : 15

(12) PATENT APPLICATION PUBLICATION
(19) INDIA
(22) Date of filing of Application :13/09/2012
(21) Application No.3793/CHE/2012 A
(43) Publication Date : 14/03/2014

(54) Title of the invention : RUN TIME GENERATION AND FUNCTIONALITY VALIDATION OF DEVICE DRIVERS

(51) International classification :G06F9/00
(31) Priority Document No :NA
(32) Priority Date :NA
(33) Name of priority country :NA
(86) International Application No :NA
Filing Date :NA
(87) International Publication No : NA
(61) Patent of Addition to Application Number :NA
Filing Date :NA
(62) Divisional to Application Number :NA
Filing Date :NA

(71)**Name of Applicant :**
1)Vayavya Labs Pvt. Ltd
Address of Applicant :Plot No 12 1st Cross 2nd Main Sadashivnagar Belgaum 590 001 Karnataka India
(72)**Name of Inventor :**
1)Venugopal Kolathur
2)Ravindragouda Kalagouda Patil
3)Parag Naik

(57) Abstract :
A system for generating and validating a device driver is provided. The system includes a hardware device 106 embed with a device programming specification, an operating system that includes a run time specification, and a computing device 102 that includes a processor, a device driver generation tool 104 executed by the processor to generate the device driver for the hardware device 106, a memory storing instructions to configure the processor. The processor is configured by the instructions to (i) dynamically query the hardware device for the device programming specification, (ii) dynamically query the run time environment for the run time specification, (iii) obtain the device programming specification that is specific to the hardware device 106, (iv) obtain the run time specification that is specific to the hardware device 106 and the run time environment, and (v) dynamically synthesize a device driver by the device driver generation tool 104 to obtain a synthesized device driver.

No. of Pages : 32 No. of Claims : 13

(12) PATENT APPLICATION PUBLICATION
(19) INDIA
(22) Date of filing of Application :13/09/2012
(21) Application No.3797/CHE/2012 A
(43) Publication Date : 14/03/2014

(54) Title of the invention : DENDRIMERS, CONJUGATES AND METHODS THEREOF

(51) International classification :A61K31/33
(31) Priority Document No :NA
(32) Priority Date :NA
(33) Name of priority country :NA
(86) International Application No :NA
Filing Date :NA
(87) International Publication No : NA
(61) Patent of Addition to Application Number :NA
Filing Date :NA
(62) Divisional to Application Number :NA
Filing Date :NA

(71)**Name of Applicant :**
1)CENTRE FOR BIOSEPARATION TECHNOLOGY-VIT
Address of Applicant :VIT University Vellore 632034 Tamil Nadu India
(72)**Name of Inventor :**
1)JISHA JOHN
2)M.A.VIJAYALAKSHMI
3)YVES GNANOU
4)VIJAYAKRISHNA KARI

(57) Abstract :
The present disclosure relates to dendrimers composed of hetero-bifunctional moiety and aromatic heterocycle. The disclosure relates to methods of synthesizing said dendrimers. The present disclosure also relates to dendrimer-bioactive molecule conjugates, the process of synthesizing the conjugates and pharmaceutical compositions comprising said conjugates. The dendrimer in the conjugates act as a carrier and significantly increases the therapeutic efficacy of the bioactive molecule.

No. of Pages : 52 No. of Claims : 21

(12) PATENT APPLICATION PUBLICATION
(19) INDIA
(22) Date of filing of Application :11/09/2012
(21) Application No.7820/CHENP/2012 A
(43) Publication Date : 14/03/2014

(54) Title of the invention : NITRIDE SEMICONDUCTOR LIGHT EMITTING ELEMENT AND METHOD FOR MANUFACTURING SAME

(51) International classification :H01L33/38,H01L21/28,H01L33/32
(31) Priority Document No :2010041314
(32) Priority Date :26/02/2010
(33) Name of priority country :Japan
(86) International Application No :PCT/JP2011/052358
Filing Date :04/02/2011
(87) International Publication No :WO 2011/105194
(61) Patent of Addition to Application Number :NA
Filing Date :NA
(62) Divisional to Application Number :NA
Filing Date :NA

(71)**Name of Applicant :**
1)NICHIA CORPORATION
Address of Applicant :491 100 Oka Kaminaka cho Anan shi Tokushima 7748601 Japan
(72)**Name of Inventor :**
1)KAWAGUCHI Hirofumi
2)YONEDA Akinori
3)DOI Hiroshi

(57) Abstract :
Provided is a nitride semiconductor element having low power consumption and high light emission efficiency wherein light emission loss is minimized by preventing light emitted from a light emitting layer from leaking out of a region in which no electrode is formed. Specifically provided is a nitride semiconductor light emitting element comprising a laminate of a first conductivity type semiconductor layer (11) a light emitting layer and a second conductivity type semiconductor layer and an electrode (22) having a laminated structure including a first layer (15) formed on the first conductivity type semiconductor layer the first layer (15) comprising a conductive region (15b) and an insulated region (15a) in a region that is in contact with the first conductivity type semiconductor layer (11).

No. of Pages : 42 No. of Claims : 13

(12) PATENT APPLICATION PUBLICATION
(19) INDIA
(22) Date of filing of Application :11/09/2012
(21) Application No.7821/CHENP/2012 A
(43) Publication Date : 14/03/2014

(54) Title of the invention : PLANT DISEASE CONTROL AGENT

(51) International classification :A01N43/713,A01N43/22,A01N43/50
(31) Priority Document No :2010059638
(32) Priority Date :16/03/2010
(33) Name of priority country :Japan
(86) International Application No :PCT/JP2011/055879
Filing Date :14/03/2011
(87) International Publication No :WO 2011/115029
(61) Patent of Addition to Application Number :NA
Filing Date :NA
(62) Divisional to Application Number :NA
Filing Date :NA

(71)**Name of Applicant :**
1)NIPPON SODA CO. LTD.
Address of Applicant :2 1 Ohtemachi 2 chome Chiyoda ku Tokyo 1008165 Japan
(72)**Name of Inventor :**
1)URIHARA Ichirou

(57) Abstract :
Disclosed is a plant disease control agent which can exhibit a superior control effect on plant diseases at a low dose. The plant disease control agent comprises at least one component selected from tetrazolyl oxime derivatives each represented by formula (I) and salts thereof and at least one component selected from the group consisting of
imidacloprid triflumizole spinosad hydroxyisoxazole thiophanate methyl tricyclazole clothianidin benomyl acetamiprid and salts thereof. In formula (I) X represents a C1 6 alkyl group or the like; n represents an integer of 0 to 5; Y represents a C1 6 alkyl group; Z represents a group represented by the formula NHC(=O) Q or the like; Q represents a C1 8 alkoxy group or the like; R represents a halogen atom; and m represents an integer of 0 to 3.

No. of Pages : 30 No. of Claims : 1

(12) PATENT APPLICATION PUBLICATION
(19) INDIA
(22) Date of filing of Application :14/05/2009
(21) Application No.2697/CHENP/2009 A
(43) Publication Date : 14/03/2014

(54) Title of the invention : INJECTOR FOR INJECTING FUEL

(51) International classification :F02M 47/02
(31) Priority Document No :10 2006 049 050.9
(32) Priority Date :18/10/2006
(33) Name of priority country :Germany
(86) International Application No :PCT/EP2007/58470
Filing Date :15/08/2007
(87) International Publication No :WO 2008/46679 A1
(61) Patent of Addition to Application Number :NA
Filing Date :NA
(62) Divisional to Application Number :NA
Filing Date :NA

(71)**Name of Applicant :**
1)ROBERT BOSCH GMBH
Address of Applicant :POSTFACH 30 02 20, 70442 STUTTGART, Germany
(72)**Name of Inventor :**
1)EISENMENGER, NADJA
2)MAGEL, HANS-CHRISTOPH

(57) Abstract :
The invention relates to an injector for injecting ftiel into a combustion Chamber (3) of an internal combustion engine, having an injector housing (9) in which a control valve (5) is held for activating an injection valve dement (7) which opens or closes off at least one injection opening (11), wherein the control valve (5) comprises a valve piston (39), by means of which a connection firom a control space (25) into a fuel re-tum line (37) can be opened or closed off. The valve piston (39) comprises an armular seat face (41) which can be placed into a seat (43). A Shoulder (55; 93) is formed on the valve piston (39), which is arranged on the high-pressure side of the valve piston (39) in such a way that the pressure force exerted by the fuel on the Shoulder (55; 93) assists the closing movement of the valve piston (39).

No. of Pages : 14 No. of Claims : 11

(12) PATENT APPLICATION PUBLICATION
(19) INDIA
(22) Date of filing of Application :08/07/2009
(21) Application No.4020/CHENP/2009 A
(43) Publication Date : 14/03/2014

(54) Title of the invention : TOPICAL DOSAGE FORM COMPRISING TRI-SUBSTITUTED GLYCEROL COMPOUNDS

(51) International classification	:A61K9/107, A61K31/662
(31) Priority Document No	:60/875,962
(32) Priority Date	:20/12/2006
(33) Name of priority country	:U.S.A.
(86) International Application No	:PCT/EP2007/062179
Filing Date	:09/11/2007
(87) International Publication No	:WO 2008/074573 A1
(61) Patent of Addition to Application Number	:NA
Filing Date	:NA
(62) Divisional to Application Number	:NA
Filing Date	:NA

(71)**Name of Applicant :**
1)ALPHAPTOSE GMBH
Address of Applicant :ALSTERCHAUSSEE 13, 20149 HAMBURG Germany
(72)**Name of Inventor :**
1)DIEDERICHS, JULIA
2)RICHTER, WOLFGANG
3)WEBER, LUTZ

(57) Abstract :
The present invention relates to pharmaceutical dosage forms for topical administration comprising a tri-substituted glycerol compound or a pharmaceutically acceptable salt thereof. The invention also relates to a corresponding method for preparing such dosage forms as well as to their use as medicaments for the treatment of cancer and immune diseases.

No. of Pages : 33 No. of Claims : 11

(12) PATENT APPLICATION PUBLICATION
(19) INDIA
(22) Date of filing of Application :14/07/2009
(21) Application No.4131/CHENP/2009 A
(43) Publication Date : 14/03/2014

(54) Title of the invention : PROPAGATION OF CONFLICT KNOWLEDGE

(51) International classification :H04L12/56
(31) Priority Document No :11/640,658
(32) Priority Date :18/12/2006
(33) Name of priority country :U.S.A.
(86) International Application No :PCT/US2007/077225
Filing Date :30/08/2007
(87) International Publication No :WO 2008/076481 A1
(61) Patent of Addition to Application Number :NA
Filing Date :NA
(62) Divisional to Application Number :NA
Filing Date :NA

(71)**Name of Applicant :**
1)MICROSOFT CORPORATION
Address of Applicant :ONE MICROSOFT WAY, REDMOND, WASHINGTON 98052-6399 U.S.A.
(72)**Name of Inventor :**
1)LEE, OLIVER
2)BECKERMAN, MICHAEL, SCOTT
3)CLARK, MICHAEL, RAY
4)KHOSRAVY, MOE
5)NOVIK, LEV
6)PFENNING, JORG-THOMAS

(57) Abstract :
A sync community may include a group of synchronization endpoints. When two synchronization endpoints of the sync community synchronize with one another, a synchronization data conflict may be detected when the two synchronization endpoints make a change to a same particular data item and the two synchronization endpoints were unaware of the changes to the same particular data item made by the other respective synchronization endpoint at the time the changes were made. Resolution of the detected synchronization data conflict may be delayed and data indicative of the detected synchronization data conflict may be propagated to other synchronization endpoints during a synchronization operation.

No. of Pages : 42 No. of Claims : 20

(12) PATENT APPLICATION PUBLICATION
(19) INDIA
(22) Date of filing of Application :14/07/2009
(21) Application No.4134/CHENP/2009 A
(43) Publication Date : 14/03/2014

(54) Title of the invention : POWDER, METHOD OF MANUFACTURING A COMPONENT AND COMPONENT

(51) International classification :B22F1/02
(31) Priority Document No :0602838-5
(32) Priority Date :29/12/2006
(33) Name of priority country :Sweden
(86) International Application No :PCT/SE2007/051086
Filing Date :28/12/2007
(87) International Publication No :WO 2008/082353 A1
(61) Patent of Addition to Application Number :NA
Filing Date :NA
(62) Divisional to Application Number :NA
Filing Date :NA

(71)**Name of Applicant :**
1)HOGANAS AB (PUBL)
Address of Applicant :S-263 83 HOGANAS Sweden
(72)**Name of Inventor :**
1)LARSSON, MATS

(57) Abstract :
The present invention relates to a powder for the powder metallurgical manufacture of components. Particularly the invention concerns an iron or iron based powder intended for the powder metallurgical manufacturing of components. It is especially suitable for manufacturing of components wherein self-lubricating properties are desired. The invention further relates to a method of manufacturing a component from said powder and an accordingly produced component. A diffusion-bonded powder according to the invention comprises iron or iron-based particles, and particles diffusion-bonded to the iron or iron-based particles. The said particles diffusion-bonded to the iron or iron-based particles comprise an alloy of Cu and 5% to 15% by weight of Sn. A component according to the invention is at least partly formed from such a diffusion-bonded powder.

No. of Pages : 21 No. of Claims : 16

(12) PATENT APPLICATION PUBLICATION
(19) INDIA
(22) Date of filing of Application :11/09/2012
(21) Application No.7822/CHENP/2012 A
(43) Publication Date : 14/03/2014

(54) Title of the invention : CONNECTION STRUCTURE OF CRIMPING TERMINAL TO ELECTRIC WIRE

(51) International classification :H01R4/18,H01R4/70
(31) Priority Document No :2010066853
(32) Priority Date :23/03/2010
(33) Name of priority country :Japan
(86) International Application No :PCT/JP2011/056973
Filing Date :23/03/2011
(87) International Publication No :WO 2011/118626
(61) Patent of Addition to Application Number :NA
Filing Date :NA
(62) Divisional to Application Number :NA
Filing Date :NA

(71)**Name of Applicant :**
1)YAZAKI CORPORATION
Address of Applicant :4 28 Mita 1 chome Minato ku Tokyo 1088333 Japan
(72)**Name of Inventor :**
1)AOKI Hiroshi
2)KOBAYASHI Naoki

(57) Abstract :
Disclosed is a connection structure for an electrical cable for a crimp contact which eliminates corrosion problems in the conductor of an electric cable by preventing moisture from penetrating as far as the conductor of the electric cable even if moisture is present on the electric cable connection unit. Before a conductor part (Wa) and an insulating sheath part (Wb) at the end of an electric cable (W) placed in a conductor crimping section (14) and a sheath compression section (15) respectively of a crimp contact (10) are crimped thereby cover sections (30 40) made of a water absorbing resin layer (31) with an impermeable layer (32) formed on the inside surface which is in contact with the conductor (Wa) cover and shield the upper surface of the end of the electrical cable including at least the part of the conductor (Wa) of the electrical cable (W) that might be exposed to the exterior. A conductor crimping flange (22) and a sheath crimping flange (24) are crimped from above while the exposed part of the conductor (Wa) is covered and the cover sections (30 40) are held thereby.

No. of Pages : 21 No. of Claims : 3

(12) PATENT APPLICATION PUBLICATION
(19) INDIA
(22) Date of filing of Application :11/03/2009
(21) Application No.1375/CHENP/2009 A
(43) Publication Date : 14/03/2014

(54) Title of the invention : KINASE INHIBITOR

(51) International classification :C07D487/04
(31) Priority Document No :60/825,168
(32) Priority Date :11/09/2006
(33) Name of priority country :U.S.A.
(86) International Application No :PCT/US07/78103
Filing Date :11/09/2007
(87) International Publication No :WO 2008/033798 A2
(61) Patent of Addition to Application Number :NA
Filing Date :NA
(62) Divisional to Application Number :NA
Filing Date :NA

(71)**Name of Applicant :**
1)SANOFI-AVENTIS
Address of Applicant :174, AVENUE DE FRANCE, F-75013 PARIS France
(72)**Name of Inventor :**
1)GILLESPY, TIMOTHY, A.,
2)EYNOTT, PAUL
3)ALLEN, ELIZABETH, M.,
4)YU , KIN, T.,
5)ZILBERSTEIN, ASHER

(57) Abstract :
The invention is directed to a compound of formula (1): (I) and the prodrugs, and pharmaceutically acceptable salts and solvates of such compounds and their prodrugs. Such a compound has valuable pharmaceutical properties, in particular the ability to inhibit protein kinases.

No. of Pages : 44 No. of Claims : 13

(12) PATENT APPLICATION PUBLICATION
(19) INDIA
(22) Date of filing of Application :07/09/2012
(21) Application No.3704/CHE/2012 A
(43) Publication Date : 14/03/2014

(54) Title of the invention : STRAW PRESERVING THRESHING UNIT FOR LONGITUDINAL AXIAL FLOW COMBINE HARVESTER

(51) International classification :A01F12/00
(31) Priority Document No :NA
(32) Priority Date :NA
(33) Name of priority country :NA
(86) International Application No :NA
Filing Date :NA
(87) International Publication No : NA
(61) Patent of Addition to Application Number :NA
Filing Date :NA
(62) Divisional to Application Number :NA
Filing Date :NA

(71)**Name of Applicant :**
1)M/S REDLANDS ASHLYN MOTORS PLC.
Address of Applicant :REDLAND HOUSE, KARIKATH LANE, M.G. ROAD, THRISSUR - 680 001 Kerala India
(72)**Name of Inventor :**
1)MR. PERINCHERY NARAYANANKUTTY PRAMOD

(57) Abstract :
A Longitudinal Axial Flow Combine Harvester with a threshing unit with threshing cylinder being made of 3mm M.S sheet which consists of three specially designed and equidistant combs placed over the threshing zone. The separation zone consists of two helical screws on the periphery, which is placed one opposite to other in clockwise direction. The upper housing consists of precisely placed helical vanes and a zigzag plate for efficient separation where as the lower portion equipped with normal concave. The comb produces centrifugal forces for impact and rubbing effect for threshing. This construction produces the rubbing effect rather than impact for the preservation of straw by the gentle handling of the centrifugal and tangential forces. Such a construction of threshing cylinder makes it possible to considerably decrease the degree of damage inflicted upon the grain and straw, which of special importance in view of improved grain sowing qualities.

No. of Pages : 18 No. of Claims : 10

(12) PATENT APPLICATION PUBLICATION
(19) INDIA
(22) Date of filing of Application :06/08/2012
(21) Application No.6882/CHENP/2012 A
(43) Publication Date : 14/03/2014

(54) Title of the invention : WHEEL SPEED SENSOR MONITORING DEVICE AND METHOD

(51) International classification	:B60T17/18,B60T8/171,B60T8/1761
(31) Priority Document No	:2010-086230
(32) Priority Date	:02/04/2010
(33) Name of priority country	:Japan
(86) International Application No	:PCT/JP2011/055734
Filing Date	:11/03/2011
(87) International Publication No	:WO 2011/125412 A1
(61) Patent of Addition to Application Number	:NA
Filing Date	:NA
(62) Divisional to Application Number	:NA
Filing Date	:NA

(71)**Name of Applicant :**
1)BOSCH CORPO
Address of Applicant :6 7 Shibuya 3 chome Shibuya ku Tokyo 1508360 Japan
(72)**Name of Inventor :**
1)ONO Shunsaku

(57) Abstract :
Provided is a monitoring device wherein even after it is confirmed during initial start that the wheel speed is normal it is possible to monitor for a possibility of failure of a wheel speed sensor and to warn or notify a driver of such a possibility. With regard to a wheel speed sensor monitoring device used on an automatic two wheeled vehicle this automatic two wheeled vehicle is equipped with a wheel speed sensor (2) which detects the wheel speed of a wheel; an electronic control unit (10) which obtains a vehicle body speed from the wheel speed and uses the wheel speed to perform antilock brake system control of the wheel; and a warning light (8) which displays a vehicle state. If the vehicle speed or the wheel speed is not more than a predetermined minimum speed the electronic control unit (10) gives notification of a possibility of failure of the wheel speed sensor by causing the warning light (8) to turn on or flash.

No. of Pages : 25 No. of Claims : 16

(12) PATENT APPLICATION PUBLICATION
(19) INDIA
(22) Date of filing of Application :05/09/2012
(21) Application No.7668/CHENP/2012 A
(43) Publication Date : 14/03/2014

(54) Title of the invention : SOLAR CELL MODULE AND PRODUCTION METHOD FOR SOLAR CELL MODULE

(51) International classification :H01L31/042
(31) Priority Document No :2010029193
(32) Priority Date :12/02/2010
(33) Name of priority country :Japan
(86) International Application No :PCT/JP2011/052807
Filing Date :10/02/2011
(87) International Publication No :WO 2011/099538
(61) Patent of Addition to Application Number :NA
Filing Date :NA
(62) Divisional to Application Number :NA
Filing Date :NA

(71)**Name of Applicant :**
1)MITSUBISHI CHEMICAL CORPORATION
Address of Applicant :1 1 Marunouchi 1 chome Chiyoda ku Tokyo 1008251 Japan
(72)**Name of Inventor :**
1)FUNAYAMA Katsuya
2)KASHIWAGI Takuya
3)YONEYAMA Takahiro
4)MURAKI Kazuhiro
5)KOMATSU Kenjiro
6)KIKUCHI Kouichi

(57) Abstract :
Disclosed is a solar cell module having a solar cell (a power generating element) formed upon a metal resin composite base which can be easily produced and has excellent durability. The solar cell module (10) has a configuration/structure in which the following have been layered: the metal resin composite base (16) in which a resin layer (16b) having a melting point of at least 125°C has been sandwiched between metal layers (16a) a bottom sealing layer (15) and/or an adhesion layer (15b) a power generating element base (14) a power generating element (13) having a power generation layer that has been sandwiched between a pair of electrodes a top sealing layer (12) and a weather resistant layer (11).

No. of Pages : 54 No. of Claims : 8

(12) PATENT APPLICATION PUBLICATION
(19) INDIA
(22) Date of filing of Application :21/09/2012
(21) Application No.8168/CHENP/2012 A
(43) Publication Date : 14/03/2014

(54) Title of the invention : BISPECIFIC BIVALENT ANTI VEGF/ANTI ANG 2 ANTIBODIES

(51) International classification :C07K16/22
(31) Priority Document No :10003269.7
(32) Priority Date :26/03/2010
(33) Name of priority country :EPO
(86) International Application No :PCT/EP2011/054504
Filing Date :24/03/2011
(87) International Publication No :WO 2011/117329
(61) Patent of Addition to Application Number :NA
Filing Date :NA
(62) Divisional to Application Number :NA
Filing Date :NA

(71)**Name of Applicant :**
1)F. HOFFMANN LA ROCHE AG
Address of Applicant :Grenzacher Strasse 124 CH 4070 Basel Switzerland
(72)**Name of Inventor :**
1)BAEHNER Monika
2)IMHOF JUNG Sabine
3)KAVLIE Anita
4)KETTENBERGER Hubert
5)KLEIN Christian
6)REGULA Joerg Thomas
7)SCHAEFER Wolfgang
8)SCHANZER Juergen Michael
9)SCHEUER Werner
10)STUBENRAUCH Kay Gunnar
11)THOMAS Markus

(57) Abstract :
The present invention relates to bispecific bivalent antibodies against human vascular endothelial growth factor (VEGF/VEGF A) and against human angiopoietin 2 (ANG 2) methods for their production pharmaceutical compositions containing said antibodies and uses thereof.

No. of Pages : 166 No. of Claims : 20

(12) PATENT APPLICATION PUBLICATION
(19) INDIA
(22) Date of filing of Application :14/01/2011
(21) Application No.127/CHE/2011 A
(43) Publication Date : 14/03/2014

(54) Title of the invention : AN INDEXABLE DRILL INSERT, A DRILLING TOOL AND A METHOD OF ASSEMBLING THEREOF

(51) International classification :B23B
(31) Priority Document No :NA
(32) Priority Date :NA
(33) Name of priority country :NA
(86) International Application No :NA
Filing Date :NA
(87) International Publication No : NA
(61) Patent of Addition to Application Number :NA
Filing Date :NA
(62) Divisional to Application Number :NA
Filing Date :NA

(71)**Name of Applicant :**
1)KENNAMETAL INDIA LIMITED
Address of Applicant :8/9th Mile Tumkur Road Bangalore 560073 Karnataka India
(72)**Name of Inventor :**
1)RAMESH KARTHIC

(57) Abstract :
The present disclosure relates to a drilling tool, more particularly to drill insert of trigon shape with plurality of cutting edges. The indexable drill insert (1) having trigon shape, comprising an upper side (lb) and lower side (lc), parallel to each other, characterized in that, a mounting hole (la) at center of the drill insert (1), enabling the indexable insert (1) to be mounted on both upper side (lb) and lower side (lc) of the insert (1); and plurality of cutting edges (1d) on each side of the insert (1).

No. of Pages : 20 No. of Claims : 9

(12) PATENT APPLICATION PUBLICATION
(19) INDIA
(22) Date of filing of Application :27/03/2009
(21) Application No.1723/CHENP/2009 A
(43) Publication Date : 14/03/2014

(54) Title of the invention : SEATBELT RETENTION DEVICE AND SYSTEM

(51) International classification :B60R 22/02
(31) Priority Document No :60/846,572
(32) Priority Date :22/09/2006
(33) Name of priority country :U.S.A.
(86) International Application No :PCT/AU2007/001381
Filing Date :19/09/2007
(87) International Publication No :(WO 2008/034179)
(61) Patent of Addition to Application Number :NA
Filing Date :NA
(62) Divisional to Application Number :NA
Filing Date :NA

(71)**Name of Applicant :**
1)TUMMY SHIELD HOLDINGS PTY LIMITED
Address of Applicant :SUITE 7, 2-4, NORTHUMBERLAND DRIVE, CARINGBAH, NSW 2229 Australia
(72)**Name of Inventor :**
1)BALADI, GEORGE, JOSEPH

(57) Abstract :
A seatbelt retention device (30) comprises a base (31) to be located on the upper seat surface (22) of a vehicle seat (20) and a seatbelt catch (32) mounted on the base (31) and adapted to retain the waist section (13) of a seatbelt (10). The seatbelt retention device (30) receives a passenger (50) on the base (31) in use, such that the catch (32) is accessible between the legs (51) of the passenger (50). A vehicle seat assembly may incorporate the seatbelt catch (32) mounted in the seat (20) and projecting through the upper seat surface (22) so as to be accessible between the legs (51) of a passenger (50) seated on the upper seat surface (22).

No. of Pages : 20 No. of Claims : 26

(12) PATENT APPLICATION PUBLICATION
(19) INDIA
(22) Date of filing of Application :04/08/2011
(21) Application No.2676/CHE/2011 A
(43) Publication Date : 14/03/2014

(54) Title of the invention : AN IMPROVED PROCESS FOR PREPARATION OF RUFINAMIDE

(51) International classification :C07D
(31) Priority Document No :NA
(32) Priority Date :NA
(33) Name of priority country :NA
(86) International Application No :NA
Filing Date :NA
(87) International Publication No : NA
(61) Patent of Addition to Application Number :NA
Filing Date :NA
(62) Divisional to Application Number :NA
Filing Date :NA

(71)**Name of Applicant :**
1)ORCHID CHEMICALS & PHARMACEUTICALS LTD
Address of Applicant :ORCHID TOWERS, 313, VALLUVAR KOTTAM HIGH ROAD, NUNGAMBAKKAM, CHENNAI - 600 034 Tamil Nadu India
(72)**Name of Inventor :**
1)REGURI BUCHI REDDY
2)THIRUMANI VENKATESHWAR GOUD
3)NAGABUSHANAM NAGAMANI
4)MANNAVA SRINIVASA RAO
5)CHAVALI NAGA RAMAKRISHNA

(57) Abstract :
The present invention provides an improved process for the preparation of Rufinamide (I) or its pharmaceutical acceptable salts. The present invention specifically relates to an improved process for the preparation of compound of formula (II) which is an important intermediate in the synthesis Rufinamide.

No. of Pages : 10 No. of Claims : 5

(12) PATENT APPLICATION PUBLICATION
(19) INDIA
(22) Date of filing of Application :02/12/2011
(21) Application No.4191/CHE/2011 A
(43) Publication Date : 14/03/2014

(54) Title of the invention : SYNERGISTIC COMPOSITION COMPRISING KAEMPFEROL AND QUERCETIN AND USES THEREOF

(51) International classification :A61K
(31) Priority Document No :NA
(32) Priority Date :NA
(33) Name of priority country :NA
(86) International Application No :NA
Filing Date :NA
(87) International Publication No : NA
(61) Patent of Addition to Application Number :NA
Filing Date :NA
(62) Divisional to Application Number :NA
Filing Date :NA

(71)**Name of Applicant :**
1)ITC LIMITED
Address of Applicant :CORPORATE R & D, ITC R & D CENTRE, PEENYA INDUSTRIAL AREA, 1ST PHASE, BANGALORE - 560 058 Karnataka India
(72)**Name of Inventor :**
1)FATIMA HUMAIRA
2)C.S. VIVEKBABU

(57) Abstract :
The present invention relates to a synergistic composition comprising Kaempferol and Quercetin or analogs of Kaempferol and Quercetin and/or pharmaceutically acceptable salts thereof, wherein Kaempferol and Quercetin or analogs of Kaempferol and Quercetin are present in a weight ratio between 4:1 and 1:4. The synergistic composition is useful for prevention and/or treatment of obesity, overweight, cardiovascular diseases and other metabolic disorders. The present invention further relates to a process for preparing the composition.

No. of Pages : 30 No. of Claims : 10

(12) PATENT APPLICATION PUBLICATION
(19) INDIA
(22) Date of filing of Application :24/09/2012
(21) Application No.8198/CHENP/2012 A
(43) Publication Date : 14/03/2014

(54) Title of the invention : VULCANIZATION ADHERED LAMINATE OF FLUORORUBBER AND SYNTHETIC RUBBER

(51) International classification :B32B25/14,B32B1/04,F16L11/08
(31) Priority Document No :2010068646
(32) Priority Date :24/03/2010
(33) Name of priority country :Japan
(86) International Application No :PCT/JP2011/056807
Filing Date :22/03/2011
(87) International Publication No :WO 2011/118569
(61) Patent of Addition to Application Number :NA
Filing Date :NA
(62) Divisional to Application Number :NA
Filing Date :NA

(71)**Name of Applicant :**
1)NICHIRIN CO. LTD.
Address of Applicant :98 1 Edo machi Chuo ku Kobe shi Hyogo 6500033 Japan
(72)**Name of Inventor :**
1)HIGASHIKA Shinji
2)NOMURA Takaaki
3)SAGA Keizo
4)GOTO Shin ichiro

(57) Abstract :
By specifically ascertaining a vulcanization-adhesion formula for fluororubber and synthetic rubber other than fluororubber such as NBR or chloroprene rubber, and thereby without adopting scorch preventing means associated with the use of DBU, DBN, a vulcanization-adhered laminate in which the fluororubber and the synthetic rubber are tightly adhered by vulcanization. Therefor, a vulcanization-adhered laminate was constituted in which a fluororubber layer and a synthetic rubber-containing layer are adhered by vulcanization, and the synthetic rubber layer prior to the vulcanization-adhesion includes (1) to (5). (1) Organic peroxide (2) Silica (3) Organic phosphonium salt (4) Maleic anhydride-modified polybutadiene (5) Magnesium oxide

No. of Pages : 20 No. of Claims : 4

(12) PATENT APPLICATION PUBLICATION
(19) INDIA
(22) Date of filing of Application :22/07/2008
(21) Application No.1798/CHE/2008 A
(43) Publication Date : 14/03/2014

(54) Title of the invention : AUGMENTING ONLINE CONTENT WITH ADDITIONAL CONTENT RELEVANT TO USER INTERESTS

(51) International classification :G06F
(31) Priority Document No :NA
(32) Priority Date :NA
(33) Name of priority country :NA
(86) International Application No :NA
Filing Date :NA
(87) International Publication No : NA
(61) Patent of Addition to Application Number :NA
Filing Date :NA
(62) Divisional to Application Number :NA
Filing Date :NA

(71)**Name of Applicant :**
1)Yahoo! Inc.
Address of Applicant :#701 First Avenue Sunnyvale California U.S.A.
(72)**Name of Inventor :**
1)Saurabh SAHNI
2)Ian KENNEDY
3)Pankaj KOTHARI
4)Todd SAMPSON
5)Emanuel MILLER
6)John SAMPSON
7)Chris GOFFINET
8)Steve HO
9)Raymund RAMOS
10)Mani KUMAR

(57) Abstract :
A method of gathering information relevant to the interests of a user includes receiving activity history associated with the user from a network data source, where the activity history includes a description of a user action initiated by the user, generating a first metadata item based upon the activity history; and storing the first metadata item as user profile information associated with the user in a user profile database. Generating the first metadata item may include extracting text from the activity history and generating the first metadata item based upon the text. The activity history may include a description of a user action. The method may further include providing a server plugin for performing a method in response to access of web content on a server by the user, the method comprising retrieving a content object from the server, determining if the first metadata item is relevant to the content object, adding a web link to the web content as a reference to the content object in response to the content object being relevant to the first metadata item; and providing the web content to the user.

No. of Pages : 45 No. of Claims : 63

(12) PATENT APPLICATION PUBLICATION
(19) INDIA
(22) Date of filing of Application :11/09/2012
(21) Application No.3768/CHE/2012 A
(43) Publication Date : 14/03/2014

(54) Title of the invention : SYSTEM AND METHOD FOR REMOTE FAULT DETECTION IN BELT SWAY AND PULL CORD SWITCHES

(51) International classification :G05B19/00
(31) Priority Document No :NA
(32) Priority Date :NA
(33) Name of priority country :NA
(86) International Application No :NA
Filing Date :NA
(87) International Publication No : NA
(61) Patent of Addition to Application Number :NA
Filing Date :NA
(62) Divisional to Application Number :NA
Filing Date :NA

(71)**Name of Applicant :**
1)SCHNEIDER ELECTRIC INDUSTRIES SAS
Address of Applicant :35, RUE JOSEPH MONIER, F-92500 RUEIL MALMAISON France
(72)**Name of Inventor :**
1)SHAIKH BADIUJZAMA
2)RITESH AGARWAL

(57) Abstract :
The inventions disclose an integrated system and method of remote fault detection in belt sway and pull cord switches of a conveyor belt. The system includes resistance potentiometers connected in series through each of the belt sway and pull cord switches, a resistance to current transducer for converting an equivalent resistance to a corresponding current value, a controller for reading the corresponding current value and identifying a faulty belt sway and pull cord switch based on the corresponding current value, an operator interface for displaying details of the faulty belt sway and pull cord switch, and a data mining and information management unit for storing the details of the faulty protection switch for future records. The resistance potentiometers are interconnected in series through each of the belt sway and pull cord switches to form a circuit in such a manner that when a belt sway and pull cord switch becomes faulty the equivalent resistance of the circuit changes and the equivalent resistance uniquely corresponds to the faulty belt sway and pull cord switch.

No. of Pages : 15 No. of Claims : 10

(12) PATENT APPLICATION PUBLICATION
(19) INDIA
(22) Date of filing of Application :22/10/2012
(21) Application No.4409/CHE/2012 A
(43) Publication Date : 14/03/2014

(54) Title of the invention : FLUE GAS DESULFURIZATION

(51) International classification :B01D53/00
(31) Priority Document No :2011-239635
(32) Priority Date :31/10/2011
(33) Name of priority country :Japan
(86) International Application No :NA
Filing Date :NA
(87) International Publication No : NA
(61) Patent of Addition to Application Number :NA
Filing Date :NA
(62) Divisional to Application Number :NA
Filing Date :NA

(71)**Name of Applicant :**
1)MITSUBISHI HEAVY INDUSTRIES, LTD.
Address of Applicant :16-5, KONAN 2-CHOME, MINATO-KU, TOKYO 108-8215 Japan
(72)**Name of Inventor :**
1)OKAMOTO, TAKUYA
2)NAGAYASU, TATSUTO
3)NAKAMURA, SATOSHI

(57) Abstract :
A flue gas desulfurization according to the present invention includes a desulfurization absorber that removes SOx and dust contained in flue gas, spray pipes that are provided in the desulfurization absorber, an absorbent feeding means that feeds an absorbing-agent-slurry containing absorbent, in which limestone is used as an absorbing agent, into the desulfurization absorber, nozzles that are provided in the spray pipe to spray the absorbent into the desulfurization absorber, an alkaline-agent feeding means that feeds an alkaline-agent containing solution into the desulfurization absorber, and an waste-water discharge pipe for discharging filtrate obtained by solid-liquid separating the absorbent discharged from the desulfurization absorber as waste water. A feed amount of the alkaline-agent containing solution into the desulfurization absorber is adjusted based on a discharge amount of the waste water.

No. of Pages : 26 No. of Claims : 3

(12) PATENT APPLICATION PUBLICATION
(19) INDIA
(22) Date of filing of Application :24/09/2012
(21) Application No.8207/CHENP/2012 A
(43) Publication Date : 14/03/2014

(54) Title of the invention : PE WAX DISPERSIONS IN THE COATING OF PLASTICS

(51) International classification :C08J7/00
(31) Priority Document No :10157720.3
(32) Priority Date :25/03/2010
(33) Name of priority country :EPO
(86) International Application No :PCT/EP2011/054533
Filing Date :24/03/2011
(87) International Publication No :WO 2011/117345
(61) Patent of Addition to Application Number :NA
Filing Date :NA
(62) Divisional to Application Number :NA
Filing Date :NA

(71)**Name of Applicant :**
1)BASF SE
Address of Applicant :67056 Ludwigshafen Germany
(72)**Name of Inventor :**
1)CSIHONY Szilard
2)GARCIA CASTRO Ivette
3)PFISTNER Heike
4)WAGNER Eva
5)BAUM Pia
6)WEIDL Christian Hubert

(57) Abstract :
The invention relates to an aqueous paint formulation consisting of an aqueous base coat and an aqueous dispersion of an at least partially neutralised ethylene copolymer wax which is selected from those ethylene copolymer waxes which contain the following as comonomers through polymerization: (A) 12 to 40 wt % of an ethylenically unsaturated carboxylic acid of formula (I) where R and R are hydrogen and/or C C alkyl; 60 to 88 wt % of ethylene 0 to 10 wt % of a further comonomer or 5 to 50 wt % of a comonomer of formula (II) where R and R are hydrogen and/or C C alkyl R is hydrogen C C alkyl and/or C C cycloalkyl where two radicals R can be bonded to a ring X is oxygen sulphur and/or N R R is C C alkyl or hydrogen and A is a divalent group; 50 to 95 wt % of ethylene and zero to 20 wt % of a further comonomer wherein the ethylene copolymer wax (A)(B)(C) and (A)(B)(C) have a molecular weight of 10 000 to 100 000 and 5 000 to 40 000 g/mol respectively; and to the use thereof for coating plastics.

No. of Pages : 18 No. of Claims : 7

(12) PATENT APPLICATION PUBLICATION
(19) INDIA
(22) Date of filing of Application :05/09/2012
(21) Application No.7685/CHENP/2012 A
(43) Publication Date : 14/03/2014

(54) Title of the invention : METHODS AND PROCEDURES FOR PRODUCING USEFUL PRODUCTS FROM WASTE MATERIALS

(51) International classification :C10L5/46,C10L5/44,C10B53/02
(31) Priority Document No :06038
(32) Priority Date :19/02/2010
(33) Name of priority country :Paraguay
(86) International Application No :PCT/NL2011/050121
Filing Date :21/02/2011
(87) International Publication No :WO 2011/102726
(61) Patent of Addition to Application Number :NA
Filing Date :NA
(62) Divisional to Application Number :NA
Filing Date :NA

(71)**Name of Applicant :**
1)ENERPY B.V.
Address of Applicant :Karbindersstraat 12 NL 5914 NW Venlo Netherlands
2)ENERPY S.A.C.I.
(72)**Name of Inventor :**
1)PETRY Dieter Peter
2)ACOSTA AYALA Aldo Mario Higinio
3)BARRIOS MACIEL Andrs Anastacio
4)VERA VERA Lon Isaac

(57) Abstract :
The invention relates to a method for producing coal asphalt liquid hydrocarbon organic acids methane gas and/or hydrogen from a waste material comprising: a) providing a waste material; b) subjecting the waste material to irradiation with low frequency macro waves with a wavelength of between 700 nm and 1 mm whereby the temperature is between 2050C and 9000C and the pressure is between 1.0 bar and 19.0 bar thereby producing coal; c) optionally subjecting the residual materials in gaseous state from step b) to a physicochemical reaction in the presence of a solid metal identified as DPP B102 whereby the temperature is between 1800C and 5000C and the pressure is between 0.98 bar and 5.5 bar thereby producing asphalt; d) optionally subjecting the residual materials in gaseous state from step b) or c) to a physicochemical reaction and/or condensation whereby the temperature is between 1500C and 7500C and the pressure is between 0.96 bar and 200 bar thereby producing liquid hydrocarbon; e) optionally subjecting the residual materials in gaseous state from step b) c) or d) to a physicochemical reaction in the presence of a solid metal identified as DPP D 102 whereby the temperature is between 500C and 1500C and the pressure is between 0.95 bar and 1.5 bar thereby producing organic acids; f) optionally subjecting the residual materials in gaseous state from step b) c) d) or e) to an absorbent wash and cooling at room temperature thereby producing methane gas and hydrogen wherein said waste material has a composition with a carbon content of 9 85% a hydrogen content of 1 15% and an oxygen content of 0 65% based on dry weight of the material. The invention further relates to products obtainable by such methods and an apparatus for performing such methods.

No. of Pages : 61 No. of Claims : 15

(12) PATENT APPLICATION PUBLICATION
(19) INDIA
(22) Date of filing of Application :24/09/2012
(21) Application No.8201/CHENP/2012 A
(43) Publication Date : 14/03/2014

(54) Title of the invention : COMMUNICATION CONTROL METHOD COMMUNICATION SYSTEM AND MANAGEMENT SERVER

(51) International classification :H04W52/30,H04W16/16
(31) Priority Document No :2010075336
(32) Priority Date :29/03/2010
(33) Name of priority country :Japan
(86) International Application No :PCT/JP2011/001507
Filing Date :15/03/2011
(87) International Publication No :WO 2011/121914
(61) Patent of Addition to Application Number :NA
Filing Date :NA
(62) Divisional to Application Number :NA
Filing Date :NA

(71)**Name of Applicant :**
1)SONY CORPORATION
Address of Applicant :1 7 1 Konan Minato ku Tokyo 1080075 Japan
(72)**Name of Inventor :**
1)SAWAI Ryo
2)KIMURA Ryota

(57) Abstract :
A management server in a network including a first transmitting device that communicates with a first receiving device and a second transmitting device that communicates with a second receiving device. The management server includes a network interface that receives a parameter corresponding to a level of improvement of communication quality at the second receiving device and a processor that calculates an allowable interference amount at the first receiving device based on the parameter.

No. of Pages : 36 No. of Claims : 18

(12) PATENT APPLICATION PUBLICATION
(19) INDIA
(22) Date of filing of Application :24/09/2012
(21) Application No.8202/CHENP/2012 A
(43) Publication Date : 14/03/2014

(54) Title of the invention : MASTER PLANOGRAPHIC PRINTING PLATE AND MANUFACTURING METHOD THEREFOR

(51) International classification :B41N1/14,G03F7/00,G03F7/004
(31) Priority Document No :2010-073870
(32) Priority Date :26/03/2010
(33) Name of priority country :Japan
(86) International Application No :PCT/JP2011/056087
Filing Date :15/03/2011
(87) International Publication No :WO 2011/118457 A1
(61) Patent of Addition to Application Number :NA
Filing Date :NA
(62) Divisional to Application Number :NA
Filing Date :NA

(71)**Name of Applicant :**
1)FUJIFILM Corporation
Address of Applicant :26 30 Nishiazabu 2 chome Minato ku Tokyo 1060031 Japan
(72)**Name of Inventor :**
1)FUJIKI Yuzo
2)SUZUKI Shota

(57) Abstract :
Disclosed is a high performance master planographic printing plate that allows easy rubber development continuous processing and on press development. Said master planographic printing plate exhibits excellent scratch resistance ink receptibility sensitivity and durability. Also disclosed is a method for manufacturing said master planographic printing plate. Said master planographic printing plate is characterized by having in this order: a support; an image recording layer containing a radical polymerization initiator and a radical polymerizable compound; and an overcoat layer containing a macromolecular resin that has a monomer unit containing an amide bond and/or an amide group with a cloud point in an aqueous solution.

No. of Pages : 79 No. of Claims : 9

(12) PATENT APPLICATION PUBLICATION
(19) INDIA
(22) Date of filing of Application :24/09/2012
(21) Application No.8206/CHENP/2012 A
(43) Publication Date : 14/03/2014

(54) Title of the invention : HOT DIP GALVANIZED STEEL SHEET AND ALLOYED HOT DIP GALVANIZED STEEL SHEET EACH HAVING EXCELLENT WORKABILITY HIGH YIELD RATIO AND HIGH STRENGTH

(51) International classification :C22C38/00,C22C38/60,C23C2/06
(31) Priority Document No :2010084468
(32) Priority Date :31/03/2010
(33) Name of priority country :Japan
(86) International Application No :PCT/JP2011/058007
Filing Date :30/03/2011
(87) International Publication No :WO 2011/125738
(61) Patent of Addition to Application Number :NA
Filing Date :NA
(62) Divisional to Application Number :NA
Filing Date :NA

(71)**Name of Applicant :**
1)KABUSHIKI KAISHA KOBE SEIKO SHO
Address of Applicant :10 26 Wakinohama cho 2 chome Chuo ku Kobe shi Hyogo 6518585 Japan
(72)**Name of Inventor :**
1)HAMADA Kazuyuki
2)ASAI Tatsuya

(57) Abstract :
Disclosed is a hot dipped galvanized steel sheet or an alloyed hot dip galvanized steel sheet which has a tensile strength of 980 MPa or more excellent processability high yield ratio and high strength. The hot dipped galvanized steel sheet or the alloyed hot dip galvanized steel sheet is characterized by containing 0.12 0.3% by mass of C 0.1% by mass or less (excluding 0% by mass) of Si 2.0 3.5% by mass of Mn 0.05% by mass or less (excluding 0% by mass) of P 0.05% by mass or less (excluding 0% by mass) of S 0.005 0.1% by mass of Al and 0.015% by mass or less (excluding 0% by mass) of N with the balance made up of ion and unavoidable impurities. The hot dipped galvanized steel sheet or the alloyed hot dip galvanized steel sheet is also characterized in that the metallic structure thereof contains bainite as a matrix structure and the area ratio of ferrite is 3 20% and the area ratio of martensite is 10 35% relative to the entire structure.

No. of Pages : 32 No. of Claims : 3

(12) PATENT APPLICATION PUBLICATION
(19) INDIA
(22) Date of filing of Application :25/09/2012
(21) Application No.8221/CHENP/2012 A
(43) Publication Date : 14/03/2014

(54) Title of the invention : PLANOGRAPHIC PRINTING MASTER PLATE AND PRODUCTION METHOD THEREFOR

(51) International classification :B41N1/14,G03F7/00,G03F7/11
(31) Priority Document No :2010073868
(32) Priority Date :26/03/2010
(33) Name of priority country :Japan
(86) International Application No :PCT/JP2011/056086
Filing Date :15/03/2011
(87) International Publication No :WO 2011/118456
(61) Patent of Addition to Application Number :NA
Filing Date :NA
(62) Divisional to Application Number :NA
Filing Date :NA

(71)**Name of Applicant :**
1)FUJIFILM Corporation
Address of Applicant :26 30 Nishiazabu 2 chome Minato ku Tokyo 1060031 Japan
(72)**Name of Inventor :**
1)MORI Takanori
2)HAYASHI Kenji
3)HASHIGAYA Manabu

(57) Abstract :
Provided is an on press development type planographic printing master plate that has outstanding ink adhesion and durability characterized by having a support body an image recording layer that contains a sensitizing dye a polymerization initiator and a polymerizable compound and is able to eliminate unexposed areas by supplying printing ink and/or dampening water on the printing press after exposure and an overcoat layer that contains a water soluble resin in that order. Said overcoat layer is effectively not mixed with the image recording layer.

No. of Pages : 45 No. of Claims : 8

(12) PATENT APPLICATION PUBLICATION
(19) INDIA
(22) Date of filing of Application :25/09/2012
(21) Application No.8222/CHENP/2012 A
(43) Publication Date : 14/03/2014

(54) Title of the invention : METHOD AND SYSTEM FOR OPERATING A PRESSURE IGNITION ENGINE

(51) International classification :F02B51/02,C10L1/02,F02M27/02
(31) Priority Document No :PA2010 00273
(32) Priority Date :31/03/2010
(33) Name of priority country :Denmark
(86) International Application No :PCT/EP2011/001021
Filing Date :02/03/2011
(87) International Publication No :WO 2011/120615
(61) Patent of Addition to Application Number :NA
Filing Date :NA
(62) Divisional to Application Number :NA
Filing Date :NA

(71)**Name of Applicant :**
1)HALDOR TOPS˜E A/S
Address of Applicant :Nym¸llevej 55 DK 2800 Kgs. Lyngby Denmark
(72)**Name of Inventor :**
1)GABRIELSSON Pr L.T.
2)JANSSENS Ton V.W.
3)MIKKELSEN Svend Erik
4)ANDERSEN Simon Ivar

(57) Abstract :
Method and system for operating a compression engine on ether containing fuel obtained by conversion of a primary fuel based on alcohol comprising the steps and means for: (a) continuously withdrawing the primary fuel based on alcohol from a fuel tank and pressurising the primary fuel based on alcohol in its liquid form to a final engine injection pressure; (b) continuously introducing the pressurized primary fuel based on alcohol into a fuel accumulation chamber; (c) continuously distributing the pressurized primary fuel based on alcohol into pipes connecting the accumulation chamber with fuel injectors of the engine; (d) prior to the fuel injectors continuously converting the pressurised primary fuel based on alcohol to an ether containing fuel by contact with an alcohol dehydration catalyst being arranged in each of the pipes upstream the fuel injectors; (e) continuously injecting the ether containing fuel at injection pressure into the engine; and (f) continuously withdrawing a part of the introduced primary fuel based on alcohol from the accumulation chamber; and (g) depressurising and recycling the withdrawn primary fuel based on alcohol to the fuel tank.

No. of Pages : 16 No. of Claims : 11

(12) PATENT APPLICATION PUBLICATION
(19) INDIA
(22) Date of filing of Application :25/09/2012
(21) Application No.8224/CHENP/2012 A
(43) Publication Date : 14/03/2014

(54) Title of the invention : METHOD OF CHARACTERISING A SCATTERING COLOURED PIGMENT

(51) International classification :G01N21/35,G01N21/47,C09C1/00
(31) Priority Document No :1005344.5
(32) Priority Date :30/03/2010
(33) Name of priority country :U.K.
(86) International Application No :PCT/GB2011/050619
Filing Date :25/03/2011
(87) International Publication No :WO 2011/121339
(61) Patent of Addition to Application Number :NA
Filing Date :NA
(62) Divisional to Application Number :NA
Filing Date :NA

(71)**Name of Applicant :**
1)TIOXIDE EUROPE LIMITED
Address of Applicant :Haverton Hill Road Billingham Stockton on Tees Durham TS23 1PS U.K.
(72)**Name of Inventor :**
1)EDWARDS John Lalande
2)LOWRY Karl
3)PARNHAM Emily Ruth
4)REID Sean Oliver Edward
5)ROBB John
6)TONKIN Rebecca Louise

(57) Abstract :
The invention provides a method of characterising a scattering coloured pigment for use in the determination of the absorption and scattering coefficients of the scattering coloured pigment the method comprising the step of obtaining a reflectance spectrum of a mixture of the scattering coloured pigment with a substantially non absorbing scattering pigment at a plurality of different volume fractions wherein the substantially non absorbing scattering pigment has a particle size greater than 0.6 micron. Also provided is a pigment characterisation system adapted to perform the method of the invention to characterise a scattering coloured pigment.

No. of Pages : 31 No. of Claims : 23

(12) PATENT APPLICATION PUBLICATION
(19) INDIA
(22) Date of filing of Application :25/09/2012
(21) Application No.8226/CHENP/2012 A
(43) Publication Date : 14/03/2014

(54) Title of the invention : SYSTEM FOR TRANSLATING SPOKEN LANGUAGE INTO SIGN LANGUAGE FOR THE DEAF

(51) International classification :G09B21/00
(31) Priority Document No :10 2010 009 738.1
(32) Priority Date :01/03/2010
(33) Name of priority country :Germany
(86) International Application No :PCT/EP2011/052894
Filing Date :28/02/2011
(87) International Publication No :WO 2011/107420
(61) Patent of Addition to Application Number :NA
Filing Date :NA
(62) Divisional to Application Number :NA
Filing Date :NA

(71)**Name of Applicant :**
1)INSTITUT FR RUNDFUNKTECHNIK GMBH
Address of Applicant :Floriansm¼hlstrasse 60 80939 munchen Germany
(72)**Name of Inventor :**
1)ILLGNER FEHNS Klaus

(57) Abstract :
For automatising the translation of spoken language into sign language and manage without human interpreter services a system is proposed which comprises the following features: A database (1) in which text data of words and syntax of the spoken language as well as sequences of video data with the corresponding meanings in the sign language are stored and a computer (20) which communicates with a database (10) in order to translate fed text data of a spoken language into corresponding video sequences of the sign language wherein further video sequences of initial hand states for definition of transition positions between individual grammatical structures of the sign language are stored in the database (10) as metadata which are inserted by the computer (20) between the video sequences of the grammatical structures of the sign language during the translation.

No. of Pages : 12 No. of Claims : 7

(12) PATENT APPLICATION PUBLICATION
(19) INDIA
(22) Date of filing of Application :07/09/2012
(21) Application No.7747/CHENP/2012 A
(43) Publication Date : 14/03/2014

(54) Title of the invention : INFORMATION PROCESSING DEVICE INFORMATION PROCESSING METHOD AND PROGRAM

(51) International classification :G06T19/00
(31) Priority Document No :2010061128
(32) Priority Date :17/03/2010
(33) Name of priority country :Japan
(86) International Application No :PCT/JP2011/001382
Filing Date :09/03/2011
(87) International Publication No :WO 2011/114659
(61) Patent of Addition to Application Number :NA
Filing Date :NA
(62) Divisional to Application Number :NA
Filing Date :NA

(71)**Name of Applicant :**
1)SONY CORPORATION
Address of Applicant :1 7 1 Konan Minato ku Tokyo 1080075 Japan
(72)**Name of Inventor :**
1)ISHIGE Hiroyuki
2)SUZUKI Kazuhiro
3)MIYASHITA Akira

(57) Abstract :
An information processing apparatus that acquires first posture information corresponding to the information processing apparatus and a first distance coordinate corresponding to the information processing apparatus and second posture information corresponding to another information processing apparatus and a second distance coordinate corresponding to the another information processing apparatus. The information processing apparatus then calculates an object s position in a virtual space based on the first and second posture information and the first and second distance coordinates.

No. of Pages : 40 No. of Claims : 21

(12) PATENT APPLICATION PUBLICATION
(19) INDIA
(22) Date of filing of Application :25/09/2012
(21) Application No.8230/CHENP/2012 A
(43) Publication Date : 14/03/2014

(54) Title of the invention : ULTRA HIGH STRENGTH STEEL PLATE HAVING EXCELLENT WORKABILITY AND PRODUCTION METHOD FOR SAME

(51) International classification :C22C38/00,C21D9/46,C22C38/60
(31) Priority Document No :2010074399
(32) Priority Date :29/03/2010
(33) Name of priority country :Japan
(86) International Application No :PCT/JP2011/057426
Filing Date :25/03/2011
(87) International Publication No :WO 2011/122487
(61) Patent of Addition to Application Number :NA
Filing Date :NA
(62) Divisional to Application Number :NA
Filing Date :NA

(71)**Name of Applicant :**
1)KABUSHIKI KAISHA KOBE SEIKO SHO
Address of Applicant :10 26 Wakinohama cho 2 chome Chuo ku Kobe shi Hyogo 6518585 Japan
(72)**Name of Inventor :**
1)IKEDA Muneaki
2)UTSUMI Yukihiro
3)MIURA Masaaki

(57) Abstract :
Disclosed is an ultra high strength steel plate with at least 1100MPa of tensile strength that has both an excellent strength stretch balance and excellent bending workability and a method for producing the same. The metal structure of the steel plate has martensite and the soft phases of bainitic ferrite and polygonal ferrite. The area of the aforementioned martensite constitutes 50% or more the area of the aforementioned bainitic ferrite constitutes 15% or more and the area of the aforementioned polygonal ferrite constitutes 5% or less (including 0%). When the circle equivalent diameter of the aforementioned soft phase is measured the coefficient of variation (standard deviation/mean value) is less or equal to 1.0. The ultra high strength steel plate has at least 1100MPa of tensile strength.

No. of Pages : 38 No. of Claims : 10

(12) PATENT APPLICATION PUBLICATION
(19) INDIA
(22) Date of filing of Application :25/09/2012
(21) Application No.8231/CHENP/2012 A
(43) Publication Date : 14/03/2014

(54) Title of the invention : PEST CONTROLLING COMPOSITION

(51) International classification :A01N37/06,A01N25/02,A01N25/30
(31) Priority Document No :2010044151
(32) Priority Date :01/03/2010
(33) Name of priority country :Japan
(86) International Application No :PCT/JP2011/000966
Filing Date :22/02/2011
(87) International Publication No :WO 2011/108220
(61) Patent of Addition to Application Number :NA
Filing Date :NA
(62) Divisional to Application Number :NA
Filing Date :NA

(71)**Name of Applicant :**
1)NIPPON KAYAKU KABUSHIKI KAISHA
Address of Applicant :11 2 Fujimi 1 chome Chiyoda ku Tokyo 1028172 Japan
(72)**Name of Inventor :**
1)SUZUKI Takeshi
2)MIYAKE Takaaki
3)OGAWA Kazuteru

(57) Abstract :
The object is to provide a pest controlling composition comprising a food or a food additive which is highly safe to human bodies and environment and being capable of exerting a remarkable effect of controlling pests such as spider mites and aphids even at a low concentration. The object is achieved by finding as a result of intensive studies that a composition which comprises a liquid polyglycerol fatty acid ester having an HLB of 5 or lower and being a liquid at ordinary temperatures from among polyglycerol fatty acid esters having been widely used as food additives together with a nonionic surfactant shows a remarkable pest controlling effect even at a low concentration and there is little chance for pests to develop resistance against the aforesaid composition.

No. of Pages : 57 No. of Claims : 19

(12) PATENT APPLICATION PUBLICATION
(19) INDIA
(22) Date of filing of Application :25/09/2012
(21) Application No.8232/CHENP/2012 A
(43) Publication Date : 14/03/2014

(54) Title of the invention : METHOD AND SYSTEM FOR OPERATING A COMPRESSION IGNITION ENGINE ON ALCOHOL CONTAINING FUELS

(51) International classification :F02B51/02,C10L1/02,F02M27/02
(31) Priority Document No :PA2010 00273
(32) Priority Date :31/03/2010
(33) Name of priority country :Denmark
(86) International Application No :PCT/EP2011/001022
Filing Date :02/03/2011
(87) International Publication No :WO 2011/120616
(61) Patent of Addition to Application Number :NA
Filing Date :NA
(62) Divisional to Application Number :NA
Filing Date :NA

(71)**Name of Applicant :**
1)HALDOR TOPS˜E A/S
Address of Applicant :Nym¸llevej 55 DK 2800 Kgs. Lyngby Denmark
(72)**Name of Inventor :**
1)DUWIG Christophe
2)GABRIELSSON Pr L.T.
3)JANSSENS Ton V.W.
4)NORSK Jesper

(57) Abstract :
Method of operating a compression ignition engine on ether containing fuel obtained by on board conversion of an alcohol containing primary fuel and a system for use in the method.

No. of Pages : 21 No. of Claims : 16

(12) PATENT APPLICATION PUBLICATION
(19) INDIA
(22) Date of filing of Application :25/09/2012
(21) Application No.8233/CHENP/2012 A
(43) Publication Date : 14/03/2014

(54) Title of the invention : MACHINE FOR THE TREATMENT OF FOOD MIXTURES WITH AN IMPROVED PERFORMANCE

(51) International classification :B01F7/16,A23G9/12
(31) Priority Document No :MI2010A000494
(32) Priority Date :25/03/2010
(33) Name of priority country :Italy
(86) International Application No :PCT/EP2011/001414
Filing Date :17/03/2011
(87) International Publication No :WO 2011/116931
(61) Patent of Addition to Application Number :NA
Filing Date :NA
(62) Divisional to Application Number :NA
Filing Date :NA

(71)**Name of Applicant :**
1)G.S.G. S.R.L.
Address of Applicant :Via Lago di Molveno 4 I 36100 Vicenza Italy
(72)**Name of Inventor :**
1)BRAVO Genesio

(57) Abstract :
A machine for the treatment of food mixtures with an improved performance comprising a container or cylinder (12) for collecting a food mixture integral with a frame structure (11) and equipped with an upper lid (13) for closing the container (12) and hinged (in 14) to the frame (11) so as to be in a closed or open position on an upper opening (15) of the container (12) in said container (12) there being a rotating shaft (16) which is coaxial to the container (12) and which supports in rotation scraping and mix ing blades at the bottom (17a) and sides (17b) of the inner and bottom walls of the container a blender (20) being positioned in an opening (19) of the lid. Particularly the blender can be positioned so to be freely removable.

No. of Pages : 28 No. of Claims : 10

(12) PATENT APPLICATION PUBLICATION
(19) INDIA
(22) Date of filing of Application :07/09/2012
(21) Application No.7764/CHENP/2012 A
(43) Publication Date : 14/03/2014

(54) Title of the invention : RADIO COMMUNICATION SYSTEM, MOBILE STATION APPARATUS, RADIO COMMUNICATION METHOD AND INTEGRATED CIRCUIT

(51) International classification :H04W72/12,H04J1/00,H04J11/00
(31) Priority Document No :2010-028727
(32) Priority Date :12/02/2010
(33) Name of priority country :Japan
(86) International Application No :PCT/JP2011/050663
Filing Date :17/01/2011
(87) International Publication No :WO 2011/099324 A1
(61) Patent of Addition to Application Number :NA
Filing Date :NA
(62) Divisional to Application Number :NA
Filing Date :NA

(71)**Name of Applicant :**
1)Sharp Kabushiki Kaisha
Address of Applicant :22 22 Nagaike cho Abeno ku Osaka shi Osaka 5458522 Japan
(72)**Name of Inventor :**
1)OUCHI Wataru
2)AIBA Tatsushi
3)NAKASHIMA Daiichiro
4)SUZUKI Shoichi

(57) Abstract :
The disclosed system enables the efficient transmission of a first and a second reference signal for channel measurement without deterioration in channel measurement accuracy and enables the efficient transmission of a first and a second reference signal for channel measurement and efficient transmission in a physical uplink control channel without deterioration in communication quality. If the transmission of a first reference signal and the transmission of a second reference signal have occurred at the same timing (YES at step S101) a mobile station device transmits the first reference signal (step S102). However if the transmission of the first reference signal and the transmission of the second reference signal have occurred at the same timing but in different component carriers (NO at step S101) then the mobile station device transmits the first reference signal and the second reference signal simultaneously (step S103).

No. of Pages : 129 No. of Claims : 27

(12) PATENT APPLICATION PUBLICATION
(19) INDIA
(22) Date of filing of Application :07/09/2012
(21) Application No.7765/CHENP/2012 A
(43) Publication Date : 14/03/2014

(54) Title of the invention : METHODS AND COMPOSITIONS FOR THE PREPARATION OF AEROSOLS

(51) International classification :A61K9/08,A61K47/10,A61K47/26
(31) Priority Document No :61/303447
(32) Priority Date :11/02/2010
(33) Name of priority country :U.S.A.
(86) International Application No :PCT/EP2011/052024
Filing Date :11/02/2011
(87) International Publication No :WO 2011/098552
(61) Patent of Addition to Application Number :NA
Filing Date :NA
(62) Divisional to Application Number :NA
Filing Date :NA

(71)**Name of Applicant :**
1)ABLYNX NV
Address of Applicant :Technologiepark 21 B 9052 Ghent Zwijnaarde Belgium
(72)**Name of Inventor :**
1)DEPLA Erik
2)SERGI Mauro
3)CASTEELS Peter

(57) Abstract :
The present invention relates to methods for the preparation of an aerosol. More specifically the present invention provides methods for the preparation of an aerosol of immunoglobulin single variable domains wherein the amount of aggregate formation is significantly reduced. The invention further provides aerosols prepared by the methods of the invention as well as compositions for use in the methods of the invention. The invention further relates to methods for the preparations of such compositions to containers kits and aerosol delivery systems comprising such compositions and to uses of the same.

No. of Pages : 87 No. of Claims : 38

(12) PATENT APPLICATION PUBLICATION
(19) INDIA
(22) Date of filing of Application :07/09/2012
(21) Application No.7768/CHENP/2012 A
(43) Publication Date : 14/03/2014

(54) Title of the invention : SYSTEM AND METHOD FOR SECURELY VALIDATING TRANSACTIONS

(51) International classification :G06Q20/00
(31) Priority Document No :61/322677
(32) Priority Date :09/04/2010
(33) Name of priority country :U.S.A.
(86) International Application No :PCT/US2011/031426
Filing Date :06/04/2011
(87) International Publication No :WO 2011/127177
(61) Patent of Addition to Application Number :NA
Filing Date :NA
(62) Divisional to Application Number :NA
Filing Date :NA

(71)**Name of Applicant :**
1)VISA INTERNATIONAL SERVICE ASSOCIATION
Address of Applicant :P.O. Box 8999 M1 11F San Francisco California 94128 U.S.A.
(72)**Name of Inventor :**
1)HAMMAD Ayman

(57) Abstract :
Systems and methods for validating and processing payment transactions are disclosed. In the embodiments of the invention a first authorization request message and a first verification value are received at a server computer. The verification value is validated and a second authorization request message with a second verification value is generated. The first verification value may be a dynamic value and the second verification value may be static value. The second verification value is associated with portable device used to perform a transaction and it is what the issuer computers of the portable device expect to receive as part of an authorization request message in a payment transaction.

No. of Pages : 38 No. of Claims : 22

(12) PATENT APPLICATION PUBLICATION
(19) INDIA
(22) Date of filing of Application :26/09/2012
(21) Application No.8252/CHENP/2012 A
(43) Publication Date : 14/03/2014

(54) Title of the invention : DISPLAY DEVICE

(51) International classification	:G02F1/1345,G02F1/1333,G02F1/1337
(31) Priority Document No	:2010094876
(32) Priority Date	:16/04/2010
(33) Name of priority country	:Japan
(86) International Application No	:PCT/JP2011/001952
Filing Date	:31/03/2011
(87) International Publication No	:WO 2011/129065
(61) Patent of Addition to Application Number	:NA
Filing Date	:NA
(62) Divisional to Application Number	:NA
Filing Date	:NA

(71)**Name of Applicant :**
1)SHARP KABUSHIKI KAISHA
Address of Applicant :22 22 Nagaike cho Abeno ku Osaka shi Osaka 5458522 Japan
(72)**Name of Inventor :**
1)MORIWAKI Hiroyuki

(57) Abstract :
A Grooves (27) are formed on first wiring lines (21 23a) of a first substrate so as to continuously extend along an outer peripheral edge section of the substrate and so as to transverse the first wiring lines (21 23a). Groove backing metal (27a) is provided on the same layer as a second wiring line (23) in the layer underneath at least the areas in which the grooves (27) overlap with the first wiring lines (21 23a) in planar view.

No. of Pages : 66 No. of Claims : 17

(12) PATENT APPLICATION PUBLICATION
(19) INDIA
(22) Date of filing of Application :26/09/2012
(21) Application No.8253/CHENP/2012 A
(43) Publication Date : 14/03/2014

(54) Title of the invention : METHOD FOR PRODUCING GLUCOSIDASE ENZYME COMPOSITION AND BIOMASS HYDROLYSIS METHOD

(51) International classification :C12N9/42,C12N15/09,C12P19/02
(31) Priority Document No :2010-044242
(32) Priority Date :01/03/2010
(33) Name of priority country :Japan
(86) International Application No :PCT/JP2011/051406
Filing Date :26/01/2011
(87) International Publication No :WO 2011/108312 A1
(61) Patent of Addition to Application Number :NA
Filing Date :NA
(62) Divisional to Application Number :NA
Filing Date :NA

(71)**Name of Applicant :**
1)TORAY INDUSTRIES INC.
Address of Applicant :1 1 Nihonbashi Muromachi 2 chome Chuo ku Tokyo 1038666 Japan
(72)**Name of Inventor :**
1)KURIHARA Hiroyuki
2)WATANABE Shiomi
3)YAMADA Katsushige
4)ISHIKAWA Kazuhiko
5)WADA Yasunobu
6)KADO Yuji

(57) Abstract :
Provided is an efficient method for decomposing biomass which involves producing glucosidase in which the cellulose degrading efficiency is improved and using said glucosidase. Specifically provided is a method for producing a mutant glucosidase wherein a DNA encoding a secretion signal sequence and a DNA encoding Asn X Ser or Asn X Thr are introduced into a DNA encoding a glucosidase from a thermophile and the resulting product is introduced into a eukaryotic microorganism and expressed as a secretory protein. Also provided are an enzyme composition containing said mutant glucosidase and a biomass hydrolysis method using said enzyme composition.

No. of Pages : 213 No. of Claims : 12

(12) PATENT APPLICATION PUBLICATION
(19) INDIA
(22) Date of filing of Application :25/09/2012
(21) Application No.8241/CHENP/2012 A
(43) Publication Date : 14/03/2014

(54) Title of the invention : METHOD AND SYSTEM FOR OPERATING A COMPRESSION IGNITION ENGINE

(51) International classification :H04R1/00
(31) Priority Document No :PA2010 00273
(32) Priority Date :31/03/2010
(33) Name of priority country :Denmark
(86) International Application No :PCT/EP2011/001019
Filing Date :02/03/2011
(87) International Publication No :WO 2011/120614
(61) Patent of Addition to Application Number :NA
Filing Date :NA
(62) Divisional to Application Number :NA
Filing Date :NA

(71)**Name of Applicant :**
1)HALDOR TOPS˜E A/S
Address of Applicant :Nym¸llevej 55 DK 2800 Kgs. Lyngby Denmark
(72)**Name of Inventor :**
1)JANSSENS Ton V. W.
2)MIKKELSEN Svend Erik
3)GABRIELSSON Pr L. T.

(57) Abstract :
A method of operating a compression ignition engine on diethyl ether containing fuel obtained by conversion of a primary ethanol containing fuel wherein the primary fuel is catalytically converted to a diethyl ether containing fuel at a constant minimum and maximum flow rate through a catalytic reactor. The thus prepared ether containing fuel is passed to a buffer tank and a system for use in anyone of the preceding claims comprising a first fuel tank for holding a primary ethanol containing fuel; an ethanol dehydration reactor connected to the first fuel tank at inlet of the reactor and to a second buffer tank connected at outlet of the reactor; the second buffer tank holding a diethyl ether containing fuel being formed in the dehydration reactor is further connected to a compression ignition engine; the second buffer tank is provided with at least a sensor for detecting an upper fuel level and at least a second sensor for detecting a lower fuel level in the buffer tank.

No. of Pages : 23 No. of Claims : 4

(12) PATENT APPLICATION PUBLICATION
(19) INDIA
(22) Date of filing of Application :25/09/2012
(21) Application No.8242/CHENP/2012 A
(43) Publication Date : 14/03/2014

(54) Title of the invention : PERCUTANEOUSLY DELIVERABLE HEART VALVE AND METHODS ASSOCIATED THEREWITH

(51) International classification :A61F2/24,A61M25/01,A61B19/02
(31) Priority Document No :61/309109
(32) Priority Date :01/03/2010
(33) Name of priority country :U.S.A.
(86) International Application No :PCT/US2011/026763
Filing Date :01/03/2011
(87) International Publication No :WO 2011/109450
(61) Patent of Addition to Application Number :NA
Filing Date :NA
(62) Divisional to Application Number :NA
Filing Date :NA

(71)**Name of Applicant :**
1)COLIBRI HEART VALVE LLC
Address of Applicant :2150 W. 6th Ave Suite M Broomfield CO 80020 U.S.A.
(72)**Name of Inventor :**
1)FISH R. David
2)PANIAGUA David

(57) Abstract :
A prosthetic heart valve implantable by catheter without surgery includes a substantially dry membrane or tissue material. In at least one embodiment the tissue is folded in a dry state to form a tissue leaflet assembly that is then attached to a frame to form an implantable prosthetic heart valve. Alternatively one or more tissue leaflets are operatively associated with a frame to form an implantable prosthetic heart valve. The implantable prosthetic heart valve is subsequently pre mounted on an integrated catheter delivery system. The catheter delivery system that includes the implantable prosthetic heart valve is then packaged and transported while the tissue remains dry. The implantable prosthetic heart valve while remaining substantially dry can then be implanted into the receiving patient.

No. of Pages : 61 No. of Claims : 73

(12) PATENT APPLICATION PUBLICATION
(19) INDIA
(22) Date of filing of Application :25/09/2012
(21) Application No.8244/CHENP/2012 A
(43) Publication Date : 14/03/2014

(54) Title of the invention : INFORMATION TERMINAL APPARATUS

(51) International classification :H05K7/20,G09F9/00
(31) Priority Document No :2010070794
(32) Priority Date :25/03/2010
(33) Name of priority country :Japan
(86) International Application No :PCT/JP2011/055912
Filing Date :14/03/2011
(87) International Publication No :WO 2011/118430
(61) Patent of Addition to Application Number :NA
Filing Date :NA
(62) Divisional to Application Number :NA
Filing Date :NA

(71)**Name of Applicant :**
1)NEC Corporation
Address of Applicant :7 1 Shiba 5 chome Minato ku Tokyo 1088001 Japan
2)NEC Personal Products Ltd.
(72)**Name of Inventor :**
1)SAITO Yoshiyuki
2)MACHIDA Satoshi

(57) Abstract :
An efficient heat discharging is executed according to the inclination of a housing of an information terminal apparatus which is induced by the manner by which the information terminal apparatus was installed or the manner in which the information terminal apparatus is held by a person operating the information terminal apparatus. Provided is an information terminal apparatus that is provided with a heat discharging mechanism within the housing thereof wherein the heat discharging mechanism carries out heat discharging control for discharging heat from the highest positioned portion of the information terminal apparatus which is determined by the inclination of the information terminal apparatus.

No. of Pages : 20 No. of Claims : 5

(12) PATENT APPLICATION PUBLICATION
(19) INDIA
(22) Date of filing of Application :08/10/2012
(21) Application No.8578/CHENP/2012 A
(43) Publication Date : 14/03/2014

(54) Title of the invention : FUND TRANSFER INFORMATION PRESENTATION SYSTEM

(51) International classification :G06Q40/00
(31) Priority Document No :2010085782
(32) Priority Date :02/04/2010
(33) Name of priority country :Japan
(86) International Application No :PCT/JP2011/053785
Filing Date :22/02/2011
(87) International Publication No :WO 2011/125379
(61) Patent of Addition to Application Number :NA
Filing Date :NA
(62) Divisional to Application Number :NA
Filing Date :NA

(71)**Name of Applicant :**
1)Data ForeVisionLtd.
Address of Applicant :6 10Tsukiji 5 chomeChuo ku Tokyo 1040045 Japan
(72)**Name of Inventor :**
1)OHKUBOYutaka
2)MORIYAKazuhiro
3)KATOShinsuke

(57) Abstract :
Disclosed is a fund transfer information presentation system capable of suitably tracking deposit asset trends for a client in order to maintain and strengthen reliable and efficient asset financing capability which is the source of maximum profit for a bank required for securing management gains for not only the conventional asset side but also for the liability side. Transaction histories within a period specified by parameters are subject to name identification by client and chronologically ordered (301) separated into deposits and withdrawals (302) the deposit and withdrawal transactions are split into ranges wherein individual transaction amounts match and matching transactions are associated one to one (303) and the one to one correspondences of the deposit and withdrawal transactions are arranged in order of time of occurrence to generate fund transfer details between products by client (304).

No. of Pages : 35 No. of Claims : 4

(12) PATENT APPLICATION PUBLICATION
(19) INDIA
(22) Date of filing of Application :21/09/2012
(21) Application No.8169/CHENP/2012 A
(43) Publication Date : 14/03/2014

(54) Title of the invention : HYBRID SADDLE - TYPE VEHICLE

(51) International classification :B62M23/02,B60K6/40,B62K25/20
(31) Priority Document No :NA
(32) Priority Date :NA
(33) Name of priority country :NA
(86) International Application No :PCT/JP2010/054966
Filing Date :23/03/2010
(87) International Publication No :WO 2011/117967
(61) Patent of Addition to Application Number :NA
Filing Date :NA
(62) Divisional to Application Number :NA
Filing Date :NA

(71)**Name of Applicant :**
1)HONDA MOTOR CO. LTD.
Address of Applicant :1 1 Minami Aoyama 2 chome Minato ku Tokyo 1078556 Japan
(72)**Name of Inventor :**
1)NOMURA Akifumi
2)OHMORI Kenichi
3)NAKAI Kazuyuki

(57) Abstract :
A hybrid saddled vehicle wherein the vehicle has increased design freedom achieved by enabling the drive mechanism for an electric motor to be compactly disposed and wherein the output of the electric motor is increased. A hybrid saddled vehicle (1) is provided with: a drive power transmitting mechanism (62) for transmitting the power of the internal combustion engine (E) to the drive shaft (52) of the rear wheel (WR) from one side of a swing arm (7) in the widthwise direction of the vehicle; and an electric motor (63) disposed on the other side in the widthwise direction of the vehicle and transmitting the drive power from the other side in the widthwise direction of the vehicle. The motor housing (90) of the electric motor (63) is pivotably supported through a pair of bearing sections (91 92) disposed on both sides of the motor housing (90) in the widthwise direction of the vehicle by the portion (52c) of the drive shaft (52) which is extended to the other side in the widthwise direction of the vehicle from the portion (52b) of the drive shaft (52) to which the rear wheel (WR) is mounted. A rotor (94) is pivotably supported by the drive shaft (52) at a position between the pair of bearing sections (91 92).

No. of Pages : 35 No. of Claims : 9

(12) PATENT APPLICATION PUBLICATION
(19) INDIA
(22) Date of filing of Application :21/09/2012
(21) Application No.8173/CHENP/2012 A
(43) Publication Date : 14/03/2014

(54) Title of the invention : WHITE FILM AND SURFACE LIGHT SOURCE USING SAME

(51) International classification :C08J9/00,C08J5/18,F21S2/00
(31) Priority Document No :2010041581
(32) Priority Date :26/02/2010
(33) Name of priority country :Japan
(86) International Application No :PCT/JP2011/053486
Filing Date :18/02/2011
(87) International Publication No :WO 2011/105295
(61) Patent of Addition to Application Number :NA
Filing Date :NA
(62) Divisional to Application Number :NA
Filing Date :NA

(71)**Name of Applicant :**
1)TORAY INDUSTRIES INC.
Address of Applicant :1 1 Nihonbashi Muromachi 2 chome Chuo ku Tokyo 1038666 Japan
(72)**Name of Inventor :**
1)OHIRA Takayuki
2)MAEKAWA Shigetoshi
3)OGATA Daisuke
4)IZAWA Masatoshi
5)TAKAHASHI Kozo

(57) Abstract :
Disclosed is a white film which combines reflective properties concealing properties and film production stability and can be made into a thin film. To achieve this the white film contains internal gas bubbles and satisfies formulas (i) (iii). (i) 0.6nB/nA0.9 (ii) 20nA (iii) 15nB (Where nA is the interface number at 10μm in the surface layer part in the film thickness direction and nB is the interface number at ±5μm in the central part in the film thickness direction.)

No. of Pages : 58 No. of Claims : 11

(12) PATENT APPLICATION PUBLICATION
(19) INDIA
(22) Date of filing of Application :24/09/2012
(21) Application No.8177/CHENP/2012 A
(43) Publication Date : 14/03/2014

(54) Title of the invention : IMPROVED VERTICAL GRILL

(51) International classification :A47J37/06
(31) Priority Document No :12/592832
(32) Priority Date :25/02/2010
(33) Name of priority country :U.S.A.
(86) International Application No :PCT/AU2011/000191
Filing Date :24/02/2011
(87) International Publication No :WO 2011/103621
(61) Patent of Addition to Application Number :NA
Filing Date :NA
(62) Divisional to Application Number :NA
Filing Date :NA

(71)**Name of Applicant :**
1)BAIR Robert
Address of Applicant :6533 North Van Ness Boulevard Fresno California 93711 U.S.A.
2)BUZICK Bonnie Lee
(72)**Name of Inventor :**
1)BAIR Robert
2)BUZICK Bonnie Lee

(57) Abstract :
A vertical grill (11) for cooking food items is disclosed wherein the vertical grill is comprised of a body (12) containing at least one vertical grilling area disposed between at least two sources of radiant heat energy (24) and wherein the body (12) is adapted to direct fats and breakaway solids generated during the cooking of the food into an external receptacle (32) via the external opening (22). It achieves this by including evacuation slides (28) and (30) which are contained within the body (12) of the grill (11) and arranged in a y shape assembly such that food and fats falling on evacuation slide (28) travels down until it is collected by evacuation slide (30) which delivers the food and fats to the external receptacle (32) where they are not in any danger of catching fire.

No. of Pages : 26 No. of Claims : 16

(12) PATENT APPLICATION PUBLICATION
(19) INDIA
(22) Date of filing of Application :09/10/2012
(21) Application No.8640/CHENP/2012 A
(43) Publication Date : 14/03/2014

(54) Title of the invention : POWER TRANSMISSION CONTROL METHOD AND MOBILE STATION DEVICE

(51) International classification :H04W52/24,H04B1/04,H04W88/02
(31) Priority Document No :2010087384
(32) Priority Date :05/04/2010
(33) Name of priority country :Japan
(86) International Application No :PCT/JP2011/058570
Filing Date :05/04/2011
(87) International Publication No :WO 2011/125993
(61) Patent of Addition to Application Number :NA
Filing Date :NA
(62) Divisional to Application Number :NA
Filing Date :NA

(71)**Name of Applicant :**
1)NTT DOCOMO INC.
Address of Applicant :11 1 Nagatacho 2 chome Chiyoda ku Tokyo 1006150 Japan
(72)**Name of Inventor :**
1)KISHIYAMA Yoshihisa
2)NISHIKAWA Daisuke
3)ABE Tetsushi
4)MIKI Nobuhiko
5)ISHII Hiroyuki

(57) Abstract :
Provided are a power transmission control method capable of appropriately controlling the transmitted power of a mobile station device having a plurality of transmission antennas and a mobile station device. Power transmission control of an uplink of a mobile station device having a plurality of transmission antennas involves the following steps: a step for measuring the path loss (PL) of at least one of a plurality of transmission antennas; a step for setting the representative path loss (PL) based on the measured path loss; a step for determining the total transmitted power (P) of the mobile station device based on the representative path loss (PL); and a step for determining the transmitted power (P) of each transmission antenna by distributing the total transmitted power (P) to the plurality of transmission antennas.

No. of Pages : 64 No. of Claims : 28

(12) PATENT APPLICATION PUBLICATION
(19) INDIA
(22) Date of filing of Application :13/09/2012
(21) Application No.3812/CHE/2012 A
(43) Publication Date : 14/03/2014

(54) Title of the invention : PROCESS FOR PREPARATION OF RALTEGRAVIR OR A PHARMACEUTICALLY ACCEPTABLE SALT THEREOF

(51) International classification	:C07D413/00	(71)**Name of Applicant :**
(31) Priority Document No	:NA	**1)LAURUS LABS PRIVATE LTD**
(32) Priority Date	:NA	Address of Applicant :2ND FLOOR, SERENE CHAMBERS ROAD, #7, BANJARA HILLS, HYDERABAD - 500 034 Andhra Pradesh India
(33) Name of priority country	:NA	
(86) International Application No	:NA	(72)**Name of Inventor :**
Filing Date	:NA	**1)NARASIMHA RAO KETAVARAPU**
(87) International Publication No	: NA	**2)VENKATA SUBRAHMANYAM CHITTALA**
(61) Patent of Addition to Application Number	:NA	**3)VENKATA SUNIL KUMAR INDUKURI**
Filing Date	:NA	**4)SEETA RAMANJANEYULU GORANTLA**
(62) Divisional to Application Number	:NA	
Filing Date	:NA	

(57) Abstract :
The present invention provides a process for the preparation of raltegravir or a pharmaceutically acceptable salt thereof, particularly raltegravir sodium salt in amorphous form and pharmaceutical composition containing the same.

No. of Pages : 30 No. of Claims : 10

(12) PATENT APPLICATION PUBLICATION
(19) INDIA
(22) Date of filing of Application :13/09/2012
(21) Application No.3813/CHE/2012 A
(43) Publication Date : 14/03/2014

(54) Title of the invention : AN IMPROVED PROCESS FOR THE PREPARATION OF VILANTEROL AND INTERMEDIATES THEREOF

(51) International classification :C07D231/00
(31) Priority Document No :NA
(32) Priority Date :NA
(33) Name of priority country :NA
(86) International Application No :NA
Filing Date :NA
(87) International Publication No : NA
(61) Patent of Addition to Application Number :NA
Filing Date :NA
(62) Divisional to Application Number :NA
Filing Date :NA

(71)**Name of Applicant :**
1)LAURUS LABS PRIVATE LTD
Address of Applicant :2ND FLOOR, SERENE CHAMBERS ROAD, #7, BANJARA HILLS, HYDERABAD - 500 034 Andhra Pradesh India
(72)**Name of Inventor :**
1)VENKATA LAKSHMI NARASIMHA RAO DAMMALAPATI
2)HARIKRISHNA MUDDULURU
3)RAVINDRA ADURI

(57) Abstract :
The present invention relates to an improved process for the preparation of vilanterol and pharmaceutically acceptable salts thereof. More specifically the invention pertains to the improved process for preparing intermediates for the preparation of vilanterol.

No. of Pages : 28 No. of Claims : 10

(12) PATENT APPLICATION PUBLICATION
(19) INDIA
(22) Date of filing of Application :01/09/2009
(21) Application No.5144/CHENP/2009 A
(43) Publication Date : 14/03/2014

(54) Title of the invention : CHEMICAL SYNTHESIS OF MORPHOLINE DERIVATIVES

(51) International classification :C07D249/02
(31) Priority Document No :9813025.5
(32) Priority Date :16/06/1998
(33) Name of priority country :U.K.
(86) International Application No :PCT/GB1999/001842
Filing Date :10/06/1999
(87) International Publication No :WO 1999/065900
(61) Patent of Addition to Application Number :NA
Filing Date :NA
(62) Divisional to Application Number :IN/PCT/2000/796/CHE
Filed on :08/12/2000

(71)**Name of Applicant :**
1)MERCK SHARP & DOHME LIMITED
Address of Applicant :HERTFORD ROAD HODDESDON, HERTFORDSHIRE EN11 9BU U.K.
(72)**Name of Inventor :**
1)COTTRELL, IAN, FRANK
2)DOLLING,ULF,H
3)HANDS, DAVID
4)WILSON,ROBERT,DARRIN

(57) Abstract :
The present invention relates to a process for the preparation of triazoline compound of formula (TIT) wherein LG is a leaving group; which are used as reactant for preparing morpholine derivatives of formula (I), useful as therapeutics agents.

No. of Pages : 17 No. of Claims : 30

(12) PATENT APPLICATION PUBLICATION
(19) INDIA
(22) Date of filing of Application :28/06/2012
(21) Application No.5677/CHENP/2012 A
(43) Publication Date : 14/03/2014

(54) Title of the invention : METHODS AND COMPOSITIONS USING CALCIUM CARBONATE

(51) International classification :C04B40/00
(31) Priority Document No :61/291,811
(32) Priority Date :31/12/2009
(33) Name of priority country :U.S.A.
(86) International Application No :PCT/US2010/045620
Filing Date :16/08/2010
(87) International Publication No :WO 2011/081681 A1
(61) Patent of Addition to Application Number :NA
Filing Date :NA
(62) Divisional to Application Number :NA
Filing Date :NA

(71)**Name of Applicant :**
1)CALERA CORPORATION
Address of Applicant :100A ALBRIGHT WAY, LOS GATOS-CA 95032 U.S.A.
(72)**Name of Inventor :**
1)CONSTANTZ, BRENT, R.
2)FARSAD, KASRA
3)CAMIRE, CHRIS
4)PATTERSON, JOSHUA
5)FERNANDEZ, MIGUEL
6)GINDER-VOGEL, MATTHEW
7)YACCATO, KARIN
8)THATCHER, RYAN
9)STAGNARO, JOHN
10)CHEN, IRVIN
11)OMELON, SIDNEY
12)HODSON, KEITH
13)CLODIC, LAURENCE
14)DEVENNEY, MARTIN
15)GERAMITA, KATHARINE
16)HOLLAND, TERENCE, C.

(57) Abstract :
Provided herein are compositions and methods including hydraulic cement, supplementary cementitious material, and/or self-cementing material. Methods for making the compositions and using the compositions are provided.

No. of Pages : 224 No. of Claims : 86

(12) PATENT APPLICATION PUBLICATION
(19) INDIA
(22) Date of filing of Application :03/10/2012
(21) Application No.8432/CHENP/2012 A
(43) Publication Date : 14/03/2014

(54) Title of the invention : CELL PREPARATION CONTAINING MESENCHYMAL STEM CELLS AND METHOD FOR PRODUCING SAME

(51) International classification :A61K35/12,A61K35/28,A61P37/06
(31) Priority Document No :2010053179
(32) Priority Date :10/03/2010
(33) Name of priority country:Japan
(86) International Application No :PCT/JP2011/055683
Filing Date :10/03/2011
(87) International Publication No :WO 2011/111787
(61) Patent of Addition to Application Number :NA
Filing Date :NA
(62) Divisional to Application Number :NA
Filing Date :NA

(71)**Name of Applicant :**
1)TWO CELLS Co.Ltd.
Address of Applicant :4 5 17 501 Danbara Minami ku Hiroshima shi Hiroshima 7320811 Japan
(72)**Name of Inventor :**
1)TSUCHIYA Toshie
2)TSUJI Koichiro
3)KATO Yukio
4)SHAO Jin Chang
5)HARA Maiko

(57) Abstract :
Disclosed is a cell preparation which contains mesenchymal stem cells that maintain immunosuppressive ability and which is produced by serum free or low serum culture. Specifically disclosed is a method for producing a cell preparation containing mesenchymal stem cells which is characterized by comprising: a proliferation step wherein mesenchymal stem cells are proliferated in a culture medium that contains FGF PDGF TGF HGF EGF at least one phospholipid and at least one fatty acid; and a screening step wherein the mesenchymal stem cells after the proliferation step are screened for mesenchymal stem cells in which the immunosuppressive ability is maintained or improved.

No. of Pages : 96 No. of Claims : 18

(12) PATENT APPLICATION PUBLICATION
(19) INDIA
(22) Date of filing of Application :15/10/2012
(21) Application No.8796/CHENP/2012 A
(43) Publication Date : 14/03/2014

(54) Title of the invention : DISPLAY DEVICE FOR VEHICLE

(51) International classification :B62J99/00,B60K37/02,B62K21/18
(31) Priority Document No :2010-068412
(32) Priority Date :24/03/2010
(33) Name of priority country :Japan
(86) International Application No :PCT/JP2011/053259
Filing Date :16/02/2011
(87) International Publication No :WO 2011/118291 A1
(61) Patent of Addition to Application Number :NA
Filing Date :NA
(62) Divisional to Application Number :NA
Filing Date :NA

(71)**Name of Applicant :**
1)HONDA MOTOR CO. LTD.
Address of Applicant :1 1 Minami Aoyama 2 chome Minato ku Tokyo 1078556 Japan
(72)**Name of Inventor :**
1)MAKABE Tomoya
2)YONEDA Jun
3)YAMATE Naoyuki

(57) Abstract :
Disclosed is a display device for a vehicle which enables highly visible placement of an FFM indicator without creating a new meter device. A key cover (100) with a slot (104) for a main key (50) equipped thereto is provided disposed at the top part of a main switch (46) and an FFM indicator (101) displaying the state of alcohol admixture in a mixed fuel inside a fuel tank (36) is attached thereto. Ribs (112 113 114) which fix the position of supply lines (101a 102a) for the FFM indicator (101) positioned in the vicinity of the slot (104) are formed on the reverse side of the key cover (100). A guide (105) which leads the supply lines (101a 102a) connected to the FFM indicator (101) and extending from the key cover (100) to the outside towards the underneath of the vehicle is provided on the vehicle front end of the key cover (100). An insert moulded key aperture collar (111) gives form to the inside of the slot (104).

No. of Pages : 50 No. of Claims : 12

(12) PATENT APPLICATION PUBLICATION
(19) INDIA
(22) Date of filing of Application :10/09/2012
(21) Application No.7807/CHENP/2012 A
(43) Publication Date : 14/03/2014

(54) Title of the invention : ELECTRICITY SYSTEM CONFIGURATION METHOD AND COMPUTER PROGRAM PERFORMING THE METHOD

(51) International classification :H04L12/24,G01R19/25
(31) Priority Document No :NA
(32) Priority Date :NA
(33) Name of priority country :NA
(86) International Application No :PCT/EP2010/051898
Filing Date :16/02/2010
(87) International Publication No :WO 2011/101017
(61) Patent of Addition to Application Number :NA
Filing Date :NA
(62) Divisional to Application Number :NA
Filing Date :NA

(71)**Name of Applicant :**
1)ABB TECHNOLOGY AG
Address of Applicant :Affolternstrasse 44 CH 8050 Zurich Switzerland
(72)**Name of Inventor :**
1)CARRARA Cristina
2)DANELLI Pietro

(57) Abstract :
A method for configuring an electricity system comprising: providing a first programmable electronic device (IEDl P); providing a further programmable electronic device (IED CS) adapted to communicate with the first programmable electronic device and configurable according to a first communication configuration mode which is dynamic or a static; providing a first configuration description file (SCDM) defining communications between the first and further programmable electronic devices according to a second communication configuration mode opposite to the first mode processing via computer the first file to convert it into a converted configuration description file (SCDC) defining communications configuration between the first and further programmable electronic devices according to the first mode. The method is particularly useful for configuring intelligent electronic devices (IEDs) which interact according to the IEC 61850 standard.

No. of Pages : 28 No. of Claims : 19

(12) PATENT APPLICATION PUBLICATION
(19) INDIA
(22) Date of filing of Application :10/09/2012
(21) Application No.7809/CHENP/2012 A
(43) Publication Date : 14/03/2014

(54) Title of the invention : METHOD AND SYSTEM FOR DETERMINING FEES AND FOREIGN EXCHANGE RATES FOR A VALUE TRANSFER TRANSACTION

(51) International classification :G06Q40/00,G06Q20/00
(31) Priority Document No :61/325809
(32) Priority Date :19/04/2010
(33) Name of priority country :U.S.A.
(86) International Application No :PCT/US2011/033113
Filing Date :19/04/2011
(87) International Publication No :WO 2011/133593
(61) Patent of Addition to Application Number :NA
Filing Date :NA
(62) Divisional to Application Number :NA
Filing Date :NA

(71)**Name of Applicant :**
1)VISA INTERNATIONAL SERVICE ASSOCIATION
Address of Applicant :P.O. Box 8999 M1 11F San Francisco California 94128 8999 U.S.A.
(72)**Name of Inventor :**
1)FRENCH Susan
2)CARLSON Mark
3)PANAGIOTIDES Alesia
4)CHACE Justin
5)KENNEDY Kate
6)RAJ Ashwin
7)TULLIS John
8)SHASTRY Vishwanath

(57) Abstract :
A method for a value transfer operation includes determining a sender currency using the account information of the sender and a receiver currency using the BIN associated with the sender account. The method further includes determining a currency exchange rate transaction fee and currency markup fee based on the sender and receiver currencies and various attributes of the sender account and the receiver account.

No. of Pages : 37 No. of Claims : 20

(12) PATENT APPLICATION PUBLICATION
(19) INDIA
(22) Date of filing of Application :27/09/2012
(21) Application No.8317/CHENP/2012 A
(43) Publication Date : 14/03/2014

(54) Title of the invention : DEVICE FOR DRYING BULK GOODS

(51) International classification :F26B21/08,F24F3/14
(31) Priority Document No :A 330/2010
(32) Priority Date :03/03/2010
(33) Name of priority country :Austria
(86) International Application No :PCT/AT2011/000103
Filing Date :02/03/2011
(87) International Publication No :WO 2011/106813
(61) Patent of Addition to Application Number :NA
Filing Date :NA
(62) Divisional to Application Number :NA
Filing Date :NA

(71)**Name of Applicant :**
1)WITTMANN KUNSTSTOFFGER„TE GMBH
Address of Applicant :Lichtblaustr. 10 A 1220 Wien Austria
(72)**Name of Inventor :**
1)FUX Erhard

(57) Abstract :
The invention relates to a device for drying bulk goods, in particular solids, such as granular materials, powders, grains, films, shreds, or the like, preferably plastic granular material. In order to dry the exhaust air flow (5) exiting the drying silo (9), the drying silo (9), through which an airflow flows, is connected by means of a process fan (11) to a wheel drier (1) that contains a drying or adsorbing agent and that has a rotatable drum (2) having radial cells (21). The individual cells (21) of the drum (2) of the wheel drier (1) are formed by plates, wherein clamping plates (24) of a cell (21) lying against the radial outer (22) and inner (23) jackets of the drum (2) have a U-shaped cross-section and are arranged axially on the inner wall. The legs (25) of the U-shaped clamping plates (24) are tilted outwardly. Separating plates (26) are provided as partitions of the individual cells (21). The separating plates are positioned by the clamping effect of adjacent legs (25) of two U-shaped clamping plates (24) lying against each other and seal off the cells from each other. Fig. 4 U shaped clamping plates (24) lying against each other and seal off the cells from each other.

No. of Pages : 19 No. of Claims : 12

(12) PATENT APPLICATION PUBLICATION
(19) INDIA
(22) Date of filing of Application :16/10/2012
(21) Application No.8846/CHENP/2012 A
(43) Publication Date : 14/03/2014

(54) Title of the invention : ORGANIC HETEROJUNCTION SOLAR CELL IN A SPACE INCLUDING AN ELECTRICALLY ACTIVE LAYER AND HAVING VERTICAL SEGREGATION

(51) International classification :H01L51/42
(31) Priority Document No :10/01727
(32) Priority Date :22/04/2010
(33) Name of priority country :France
(86) International Application No :PCT/FR2011/000239
Filing Date :20/04/2011
(87) International Publication No :WO 2011/131864
(61) Patent of Addition to Application Number :NA
Filing Date :NA
(62) Divisional to Application Number :NA
Filing Date :NA

(71)**Name of Applicant :**
1)COMMISSARIAT A LENERGIE ATOMIQUE ET AUX ENERGIES ALTERNATIVES
Address of Applicant :25 rue Leblanc Btiment Le Ponant D F 75015 Paris France
(72)**Name of Inventor :**
1)BERSON Solenn
2)BAILLY Sverine
3)GUILLEREZ Stphane
4)LEMAITRE Noella

(57) Abstract :
The electrically active layer (4) of an organic heterojunction solar cell corresponds to an additional layer (7) so as to promote vertical segregation between the type p organic semiconductor material and the type n carbon semiconductor material that are present in the electrically active layer (4). The additional layer (7) is in direct contact with the electrically active layer (4). Said additional layer includes a compound forming non covalent interactions with the type n carbon semiconductor material. Particularly said compound can be P4VP when the electrically active layer (4) is made of a P3HT : PCBM mixture. Said additional layer moreover comprises a type n semiconductor material.

No. of Pages : 23 No. of Claims : 15

(12) PATENT APPLICATION PUBLICATION
(19) INDIA
(22) Date of filing of Application :24/09/2012
(21) Application No.8212/CHENP/2012 A
(43) Publication Date : 14/03/2014

(54) Title of the invention : A PRETREATED EPOXIDATION CATALYST AND A PROCESS FOR PRODUCING AN OLEFIN THEREWITH

(51) International classification :B01J29/89,B01J37/02,B01J37/00
(31) Priority Document No :61/317383
(32) Priority Date :25/03/2010
(33) Name of priority country :U.S.A.
(86) International Application No :PCT/US2011/000521
Filing Date :22/03/2011
(87) International Publication No :WO 2011/119215
(61) Patent of Addition to Application Number :NA
Filing Date :NA
(62) Divisional to Application Number :NA
Filing Date :NA

(71)**Name of Applicant :**
1)DOW GLOBAL TECHNOLOGIES LLC
Address of Applicant :2040 Dow Center Midland MI 48674 U.S.A.
(72)**Name of Inventor :**
1)CRAMPTON Hannah L.

(57) Abstract :
A pretreated titanium silicalite with MFI structure (TS 1) catalyst which has been pretreated with methanol and then optionally filtered and optionally air dried to form a pretreated activated TS 1 catalyst. The activated TS 1 may be used in an epoxidation reaction with no additional methanol added and has equivalent activity to TS 1 used with large excesses of methanol. By removing the need for additional methanol during the reaction the losses of epichlorohydrin from solvolysis are minimized significantly.

No. of Pages : 17 No. of Claims : 12

(12) PATENT APPLICATION PUBLICATION
(19) INDIA
(22) Date of filing of Application :24/09/2012
(21) Application No.8213/CHENP/2012 A
(43) Publication Date : 14/03/2014

(54) Title of the invention : RFID SYSTEM WITH AN EDDY CURRENT TRAP

(51) International classification :H01Q1/52,H01Q15/00,H01Q1/22
(31) Priority Document No :61/308655
(32) Priority Date :26/02/2010
(33) Name of priority country :U.S.A.
(86) International Application No :PCT/US2011/026274
Filing Date :25/02/2011
(87) International Publication No :WO 2011/106666
(61) Patent of Addition to Application Number :NA
Filing Date :NA
(62) Divisional to Application Number :NA
Filing Date :NA

(71)**Name of Applicant :**
1)DEKA PRODUCTS LIMITED PARTNERSHIP
Address of Applicant :340 Commercial Street Manchester NH 03101 U.S.A.
(72)**Name of Inventor :**
1)BLUMBERG David
2)DATTOLO James J.

(57) Abstract :
An RFlD antenna assembly configured to be energized with a carrier signal is disclosed. The RFID antenna assembly includes an inductive component including a loop antenna assembly at least one capaeitivc component coupled to the inductive component and an eddy current trap positioned a predetermined distance from the loop antenna assembly.

No. of Pages : 101 No. of Claims : 92

(12) PATENT APPLICATION PUBLICATION
(19) INDIA
(22) Date of filing of Application :25/09/2012
(21) Application No.8219/CHENP/2012 A
(43) Publication Date : 14/03/2014

(54) Title of the invention : INTEGRATED SYSTEM AND METHOD FOR CAR POOLING USING SMART CARDS GPS GPRS ACTIVE POSTER AND NEAR FIELD COMMUNICATION DEVICES

(51) International classification :G01C21/00
(31) Priority Document No :12/705696
(32) Priority Date :15/02/2010
(33) Name of priority country :U.S.A.
(86) International Application No :PCT/US2010/053465
Filing Date :21/10/2010
(87) International Publication No :WO 2011/100005
(61) Patent of Addition to Application Number :NA
Filing Date :NA
(62) Divisional to Application Number :NA
Filing Date :NA

(71)**Name of Applicant :**
1)CELLULAR EXPRESS INC.
Address of Applicant :XIUS bcgi Attn: Legal Dept 400 Trade Center Suite 2890 Woburn Massachusetts 01801 U.S.A.
(72)**Name of Inventor :**
1)DEWAKAR Sunny Ramaswamy
2)CHAUDHARY Parveen Kumar
3)NARKHEDE Kishor
4)KARRI Hemanth Kashyap

(57) Abstract :
A method integrated system and in vehicle Active Poster for processing mobile touch transactions including carpooling transactions. The integration includes a near field contactless or swipe smart card or other portable identification device which may be standalone affixed to or part of a mobile or hand held portable wireless communication device a touch sensitive Active Poster also with swipe or near field contactless communication capability and also incorporating or in communication with GPS or other vehicle location services capability for the vehicle a car pool management or other service provider s system and application and a host computer with networking capability.

No. of Pages : 48 No. of Claims : 21

(12) PATENT APPLICATION PUBLICATION
(19) INDIA
(22) Date of filing of Application :25/09/2012
(21) Application No.8220/CHENP/2012 A
(43) Publication Date : 14/03/2014

(54) Title of the invention : WATER PURIFIER

(51) International classification :C02F1/28,C02F1/00
(31) Priority Document No :2010069871
(32) Priority Date :25/03/2010
(33) Name of priority country :Japan
(86) International Application No :PCT/JP2011/054447
Filing Date :28/02/2011
(87) International Publication No :WO 2011/118336
(61) Patent of Addition to Application Number :NA
Filing Date :NA
(62) Divisional to Application Number :NA
Filing Date :NA

(71)**Name of Applicant :**
1)Sharp Kabushiki Kaisha
Address of Applicant :22 22 Nagaike cho Abeno ku Osaka shi Osaka 5458522 Japan
(72)**Name of Inventor :**
1)MORISUE Takashi

(57) Abstract :
Disclosed is a water purifier that can determine the appropriate amount of discard water. The water purifier (1) comprises a purified water supply unit (110) an integrated flow rate measurement unit (113) and a control and calculation unit (131). The control and calculation unit (131) is configured such that when the volume of purified water measured by the integrated flow rate measurement unit (113) from when the supply of purified water by the purified water supply unit (110) commences until a judgment time point is less than a predetermined inadequate purified water volume for usage (Q) said control and calculation unit can determine that the purified water supplied by the purified water supply unit (110) is unsuitable purified water that is not appropriate for use. The Q for the Nth time is determined based on the length of time from when the supply of purified water is stopped by the purified water supply unit (110) at the (N 1)th time until the supply of purified water was started at the Nth time and based on the difference between the Q at the (N 1)th time and the volume of purified water measured by the integrated flow rate measurement unit (113) between when the supply of purified water commenced at the (N 1)th time until the supply of water stopped at the (N 1)th time.

No. of Pages : 68 No. of Claims : 9

(12) PATENT APPLICATION PUBLICATION
(19) INDIA
(22) Date of filing of Application :17/10/2012
(21) Application No.8944/CHENP/2012 A
(43) Publication Date : 14/03/2014

(54) Title of the invention : APPARATUS FOR PRODUCING METHACRYLIC POLYMER AND PRODUCTION METHOD THEREOF

(51) International classification :C08F2/01,C08F20/00
(31) Priority Document No :2010-087515
(32) Priority Date :06/04/2010
(33) Name of priority country :Japan
(86) International Application No :PCT/JP2011/058543
Filing Date :04/04/2011
(87) International Publication No :WO 2011/125980 A1
(61) Patent of Addition to Application Number :NA
Filing Date :NA
(62) Divisional to Application Number :NA
Filing Date :NA

(71)**Name of Applicant :**
1)MITSUBISHI RAYON CO. LTD.
Address of Applicant :1 1 Marunouchi 1 chome Chiyoda ku Tokyo 1008253 Japan
(72)**Name of Inventor :**
1)HAYASHIDA Masahiro
2)YOSHIMURA Hisaaki
3)NONAKA Daisuke
4)MORITA Yusuke
5)MATSUO Mitsuhiro

(57) Abstract :
Disclosed is an apparatus for producing a high-quality methacrylic polymer with good productivity, comprising a complete mixing type reactor 11, tubular reactors 12 and 13 which have been serially connected, and a volatile removing instrument 14, wherein at least two of the tubular reactors 12 and 13 are connected via a cooler 15 for cooling the reaction mixture. It is preferable that the cooler 15 is a multitubular cooler and the tubular reactors 12 and 13 are plug flow reactors.

No. of Pages : 28 No. of Claims : 4

(12) PATENT APPLICATION PUBLICATION
(19) INDIA
(22) Date of filing of Application :10/09/2012
(21) Application No.7782/CHENP/2012 A
(43) Publication Date : 14/03/2014

(54) Title of the invention : A MASTER ALLOY FOR PRODUCING SINTER HARDENED STEEL PARTS AND PROCESS FOR THE PRODUCTION OF SINTER HARDENED PARTS

(51) International classification :C22C35/00,B22F3/12,B22F3/24
(31) Priority Document No :61/304600
(32) Priority Date :15/02/2010
(33) Name of priority country :U.S.A.
(86) International Application No :PCT/CA2011/050088
Filing Date :15/02/2011
(87) International Publication No :WO 2011/097736
(61) Patent of Addition to Application Number :NA
Filing Date :NA
(62) Divisional to Application Number :NA
Filing Date :NA

(71)**Name of Applicant :**
1)CORPORATION DE LECOLE POLYTECHNIQUE DE MONTREAL
Address of Applicant :2900 boul. Edouard Montpetit Montral Qubec H3T 1J4 Canada
(72)**Name of Inventor :**
1)LESPERANCE Gilles
2)BAILON POUJOL Ian

(57) Abstract :
A master alloy used to produce the steel part and a process for producing a sinter hardened steel part from the master alloy are described. The powdered master alloy having a composition of iron about 1 to less than 5 weight% C about 3 to less than 15 weight% Mn and about 3 to less than 15 weight% Cr wherein the master alloy comprises a microstructure composed of a solid solution of the alloying elements and carbon the microstructure comprising at least 10 volume% austenite and the remainder as iron compounds. The process comprises: preparing the master alloy mixing the master alloy with a steel powder to produce a mixture wherein the weight% of the master alloy is from 5 to 35 weight% of the mixture compacting the mixture into a shape of a part and sintering the mixture to produce the steel part and controlling the cooling rate after sintering to produce sinter hardening. The master alloy powder can also be used as a sinter hardening enhancer when mixed with low alloy steel powders.

No. of Pages : 32 No. of Claims : 76

(12) PATENT APPLICATION PUBLICATION
(19) INDIA
(22) Date of filing of Application :10/09/2012
(21) Application No.7786/CHENP/2012 A
(43) Publication Date : 14/03/2014

(54) Title of the invention : PURIFICATION OF CARBOXYLIC ACIDS BY CATALYTIC HYDROGENATION

(51) International classification	:C07C51/487,C07C63/15,C07C63/26
(31) Priority Document No	:61/304567
(32) Priority Date	:15/02/2010
(33) Name of priority country	:U.S.A.
(86) International Application No	:PCT/US2011/024746
Filing Date	:14/02/2011
(87) International Publication No	:WO 2011/100682
(61) Patent of Addition to Application Number	:NA
Filing Date	:NA
(62) Divisional to Application Number	:NA
Filing Date	:NA

(71)**Name of Applicant :**
1)INVISTA TECHNOLOGIES S.A.R.L.
Address of Applicant :Zweignlederlassung St. Gallen Pestalozzistrasse 2 9000 St. Gallen Switzerland
(72)**Name of Inventor :**
1)BICKHAM David Robert
2)OBRIEN Robert John
3)PARKER David

(57) Abstract :
The present invention relates to a process for the production of an aromatic carboxylic acid comprising: a) introducing a crude aromatic carboxylic acid solution into a purification reactor vessel wherein the purification reactor vessel is operating under pressure b) introducing hydrogen gas into the purification reactor vessel c) dissolving the hydrogen gas in the crude aromatic polycarboxylic acid solution as the solution flows down a wall of a vertical conduit onto a distributor wherein the purification reactor vessel has a gas liquid contact area to plant throughput (capacity) ratio of at least 0.55 m2/ te/h of carboxylic acid for dissolving the hydrogen gas in the crude aromatic polycarboxylic acid solution to produce a reaction solution and d) contacting the reaction solution with a supported catalyst bed to produce a purified aromatic carboxylic acid wherein the supported catalyst bed is submerged in the reaction solution and a liquid level of the reaction solution is maintained above the supported catalyst bed.

No. of Pages : 20 No. of Claims : 16

(12) PATENT APPLICATION PUBLICATION
(19) INDIA
(22) Date of filing of Application :18/10/2012
(21) Application No.8958/CHENP/2012 A
(43) Publication Date : 14/03/2014

(54) Title of the invention : OLED LIGHT EXTRACTION FILMS LAMINATED ONTO GLASS SUBSTRATES

(51) International classification :G02B5/02,H05B33/02
(31) Priority Document No :12/765019
(32) Priority Date :22/04/2010
(33) Name of priority country :U.S.A.
(86) International Application No :PCT/US2011/033183
Filing Date :20/04/2011
(87) International Publication No :WO 2011/133629
(61) Patent of Addition to Application Number :NA
Filing Date :NA
(62) Divisional to Application Number :NA
Filing Date :NA

(71)**Name of Applicant :**
1)3M INNOVATIVE PROPERTIES COMPANY
Address of Applicant :3M Center Post Office Box 33427 Saint Paul Minnesota 55133 3427 U.S.A.
(72)**Name of Inventor :**
1)LE Ha T.
2)ZHANG Jun Ying
3)LAMANSKY Sergey A.
4)TAPIO Scott M.
5)HAO Encai
6)STEGALL David B.
7)MOLLENHAUER Serena L.

(57) Abstract :
A light extraction film laminated to a glass substrate for organic light emitting diode (OLED) devices. The light extraction film includes a flexible substantially transparent film a low index nanostructured layer applied to the film and a high index planarizing backfill layer applied over the nanostructured layer. A glass substrate is laminated to the flexible substantially transparent film on a side opposite the nanostructured layer and including an ultra low index region between the film and the glass substrate. The ultra low index region is used to reduce optical losses occurring with the glass substrate.

No. of Pages : 14 No. of Claims : 18

(12) PATENT APPLICATION PUBLICATION
(19) INDIA
(22) Date of filing of Application :18/10/2012
(21) Application No.8963/CHENP/2012 A
(43) Publication Date : 14/03/2014

(54) Title of the invention : GEAR PUMP

(51) International classification :F04C2/14,F04C15/00
(31) Priority Document No :10 2010 012 653.5
(32) Priority Date :25/03/2010
(33) Name of priority country :Germany
(86) International Application No :PCT/EP2011/054135
Filing Date :18/03/2011
(87) International Publication No :WO 2011/117154
(61) Patent of Addition to Application Number :NA
Filing Date :NA
(62) Divisional to Application Number :NA
Filing Date :NA

(71)**Name of Applicant :**
1)OERLIKON TEXTILE GMBH & CO. KG
Address of Applicant :Leverkuser Strasse 65 42897 Remscheid Germany
(72)**Name of Inventor :**
1)HELBING Ulrich
2)TOMZIK Arkardiusz
3)WITZLER Dietrich

(57) Abstract :
A gear pump is described with a plurality of gearwheels which engage into one another in order to convey a medium and are held rotatably in a pump housing. One of the gearwheels is driven by a pump shaft which can be coupled to a drive via a coupling end. In order in particular at greatly fluctuating operating pressures to obtain uniform conveying streams even in the case of changing load states within one revolution of the pump shaft a brake ring is arranged according to the invention on the circumference of the pump shaft which brake ring acts by way of at least one braking surface on a frictional surface of the pump shaft or on a frictional surface of the pump housing.

No. of Pages : 23 No. of Claims : 10

(12) PATENT APPLICATION PUBLICATION
(19) INDIA
(22) Date of filing of Application :25/09/2012
(21) Application No.8227/CHENP/2012 A
(43) Publication Date : 14/03/2014

(54) Title of the invention : METHOD FOR THE PREPARATION OF A COMPRESSION IGNITION ENGINE FUEL

(51) International classification :F02B51/02,C10L1/02,F02M27/02
(31) Priority Document No :PA 2010 00273
(32) Priority Date :31/03/2010
(33) Name of priority country :Denmark
(86) International Application No :PCT/EP2011/001018
Filing Date :02/03/2011
(87) International Publication No :WO 2011/120613
(61) Patent of Addition to Application Number :NA
Filing Date :NA
(62) Divisional to Application Number :NA
Filing Date :NA

(71)**Name of Applicant :**
1)HALDOR TOPS˜E A/S
Address of Applicant :Nym¸llevej 55 DK 2800 Kgs. Lyngby Denmark
(72)**Name of Inventor :**
1)DUWIG Christophe
2)JANSSENS Ton V.W.
3)GABRIELSSON Pr

(57) Abstract :
Method for the preparation of a compression ignition engine fuel comprising the steps of providing a mixture of a primary hydrocarbon fuel comprising one or more alcohols; and dehydrating in the mixture the one or more alcohol to its or their corresponding ether and water to obtain the compression ignition fuel.

No. of Pages : 15 No. of Claims : 8

(12) PATENT APPLICATION PUBLICATION
(19) INDIA
(22) Date of filing of Application :25/09/2012
(21) Application No.8228/CHENP/2012 A
(43) Publication Date : 14/03/2014

(54) Title of the invention : METHOD AND SYSTEM FOR REPRODUCTION OF 3D IMAGE CONTENTS

(51) International classification :H04N13/00
(31) Priority Document No :102010009737.3
(32) Priority Date :01/03/2010
(33) Name of priority country :Germany
(86) International Application No :PCT/EP2011/052918
Filing Date :28/02/2011
(87) International Publication No :WO 2011/107426
(61) Patent of Addition to Application Number :NA
Filing Date :NA
(62) Divisional to Application Number :NA
Filing Date :NA

(71)**Name of Applicant :**
1)INSTITUT FR RUNDFUNKTECHNIK GMBH
Address of Applicant :Floriansm¼hlstrasse 60 80939 Germany
(72)**Name of Inventor :**
1)ILLGNER FEHNS Klaus

(57) Abstract :
To allow for a larger selection ofviewpoints for the viewer during the reproduction of 3D image contents it is proposed to compute the two stereoscopic images from the image signals ofrecording cameras (101 102 103) which record images of an object (1) to be reproduced from differentviewpoints of a monoscopic position. The stereoscopic images are computed with an image viewpoint which correspond to the viewing angle of a hypothetical viewer (400) in the central axis of the monitor screen (304). A change of the actual viewing position with regard to the central axis is signalized to a processing unit (301) which computes the two stereoscopic images with image viewpoints changed accordingly.

No. of Pages : 9 No. of Claims : 11

(12) PATENT APPLICATION PUBLICATION
(19) INDIA
(22) Date of filing of Application :19/10/2012
(21) Application No.8995/CHENP/2012 A
(43) Publication Date : 14/03/2014

(54) Title of the invention : WIRELESS COMMUNICATION METHOD MOBILE STATION DEVICE WIRELESS COMMUNICATION SYSTEM AND INTEGRATED CIRCUIT

(51) International classification	:H04W28/04,H04J11/00,H04L1/16
(31) Priority Document No	:2010-077447
(32) Priority Date	:30/03/2010
(33) Name of priority country	:Japan
(86) International Application No	:PCT/JP2011/057455
Filing Date	:25/03/2011
(87) International Publication No	:WO 2011/122495 A1
(61) Patent of Addition to Application Number	:NA
Filing Date	:NA
(62) Divisional to Application Number	:NA
Filing Date	:NA

(71)**Name of Applicant :**
1)Sharp Kabushiki Kaisha
Address of Applicant :22 22 Nagaike cho Abeno ku Osaka shi Osaka 5458522 Japan
(72)**Name of Inventor :**
1)SUZUKI Shoichi
2)NAKASHIMA Daiichiro
3)UEMURA Katsunari

(57) Abstract :
Disclosed is a wireless communication system of which a mobile station device and a base station device communicate using a plurality of downlink component carriers wherein PUSCH retransmission is efficiently controlled. In the mobile station device which communicates with the base station device using a plurality of downlink component carriers and a plurality of uplink component carriers when a downlink component carrier corresponding to one of the aforementioned uplink component carriers is set in a manner so as to not use downlink communication the contents are deleted of the HARQ buffer of the uplink component carrier relating to the aforementioned downlink component carrier set in a manner so as to not use downlink communication.

No. of Pages : 93 No. of Claims : 15

(12) PATENT APPLICATION PUBLICATION
(19) INDIA
(22) Date of filing of Application :19/10/2012
(21) Application No.8997/CHENP/2012 A
(43) Publication Date : 14/03/2014

(54) Title of the invention : SADDLED ELECTRIC VEHICLE

(51) International classification :B60K1/04,B62J9/00,B62J99/00
(31) Priority Document No :NA
(32) Priority Date :NA
(33) Name of priority country :NA
(86) International Application No :PCT/JP2010/055851
Filing Date :31/03/2010
(87) International Publication No :WO 2011/121757
(61) Patent of Addition to Application Number :NA
Filing Date :NA
(62) Divisional to Application Number :NA
Filing Date :NA

(71)**Name of Applicant :**
1)HONDA MOTOR CO. LTD.
Address of Applicant :1 1 Minami Aoyama 2 chome Minato ku Tokyo 1078556 Japan
(72)**Name of Inventor :**
1)KAWASAKI Shinji
2)KYODEN Motoshi
3)SAHATA Tomoyuki
4)HIRAMATSU Akito

(57) Abstract :
A saddled electric vehicle comprises: a power unit including an electric motor for generating power which drives the rear wheel which is rotatably supported at the rear end of a swing arm which is pivotably supported by the vehicle body frame; a battery for supplying electric power to the electric motor; a battery case for containing the battery; and a cooling fan for introducing cooling air flow into the battery case. A power unit (PA) at least including the electric motor (25A) is disposed behind the rear wall of the battery case (27A) having an air introduction opening in the front wall thereof. One end of the output shaft (78A) of the power unit (PA) is connected to the rotating shaft (64) of the cooling fan (62) which is contained within the battery case (27A) so as to introduce cooling air into the battery case (27A) from the air introduction opening and the other end of the output shaft (78A) is connected to a power transmitting means (98A) for transmitting power to the rear wheel. The configuration simplifies the structure of the cooling system for the battery and reduces the air flow path resistance of the cooling system.

No. of Pages : 37 No. of Claims : 7

(12) PATENT APPLICATION PUBLICATION
(19) INDIA
(22) Date of filing of Application :25/06/2012
(21) Application No.5524/CHENP/2012 A
(43) Publication Date : 14/03/2014

(54) Title of the invention : PROCESS FOR PRODUCTION OF OPTICALLY ACTIVE 3-SUBSTITUTED GLUTARIC ACID MONOAMIDE

(51) International classification :C07C231/20
(31) Priority Document No :2009-295474
(32) Priority Date :25/12/2009
(33) Name of priority country :Japan
(86) International Application No :PCT/JP2010/073013
Filing Date :21/12/2010
(87) International Publication No :WO 2011/078172 A1
(61) Patent of Addition to Application Number :NA
Filing Date :NA
(62) Divisional to Application Number :NA
Filing Date :NA

(71)**Name of Applicant :**
1)KANEKA CORPORATION
Address of Applicant :2-4, NAKANOSHIMA 3-CHOME, KITA-KU, OSAKA-SHI, OSAKA 5308288 Japan
(72)**Name of Inventor :**
1)UEKITA, KEN
2)NISHIYAMA, AKIRA
3)TAOKA, NAOAKI

(57) Abstract :
The process for producing an optically active 3-substituted glutaric acid monoamide is characterized in comprising the step of precipitating the optically active 3-substituted glutaric acid monoamide by mixing an acid and a mixed liquid containing an optically active 3-substituted glutaric acid monoamide represented by the following formula (2): wherein indicates an asymmetric carbon atom; R1 is a C1-8 alkyl group, a C2-8 alkenyl group, a C2-8 alkynyl group, a C4-20 aryl group or a C5-20 aralkyl group; and the alkyl group, the alkenyl group, the alkynyl group, the aryl group and the aralkyl group may have a substituent, a basic compound, water and an organic solvent.

No. of Pages : 51 No. of Claims : 15

(12) PATENT APPLICATION PUBLICATION
(19) INDIA
(22) Date of filing of Application :04/09/2012
(21) Application No.7623/CHENP/2012 A
(43) Publication Date : 14/03/2014

(54) Title of the invention : METHOD AND TUBULAR SEMI FINISHED PRODUCT FOR PRODUCING AN OPTICAL FIBER

(51) International classification :C03B37/012,C03B37/027,C03C13/04
(31) Priority Document No :10 2010 010 968.1
(32) Priority Date :10/03/2010
(33) Name of priority country :Germany
(86) International Application No :PCT/EP2011/053590
Filing Date :10/03/2011
(87) International Publication No :WO 2011/110617
(61) Patent of Addition to Application Number :NA
Filing Date :NA
(62) Divisional to Application Number :NA
Filing Date :NA

(71)**Name of Applicant :**
1)HERAEUS QUARZGLAS GMBH & CO. KG
Address of Applicant :Quarzstrasse 8 63450 Hanau Germany
(72)**Name of Inventor :**
1)SATTMANN Ralph
2)VYDRA Jan
3)HUENERMANN Michael

(57) Abstract :
Methods for producing an optical fiber by elongating a silica glass blank or a coaxial group of silica glass components on the basis of which a fiber is obtained that comprises a core zone an inner jacket zone enclosing the core zone and a ring zone surrounding the inner jacket zone are known. In order to provide proceeding from this a method a tubular semi finished product and a group of coaxial components for the cost effective production of an optical fiber which is characterized by a high quality of the boundary between the core and jacket and by low bending sensitivity according to the invention the silica glass of the ring zone is provided in the form of a ring zone tube made of silica glass having a mean fluorine content of at least 6000 weight ppm and the tube has an inner tube surface and an outer tube surface wherein via the wall of the ring zone tube a radial fluorine concentration profile is adjusted which has an inner fluorine depletion layer with a layer thickness of at least 1 µm and no more than 10 µm in which the fluorine content decreases toward the inner tube surface and is no more than 3000 weight ppm in a region close to the surface which has a thickness of 1 µm.

No. of Pages : 22 No. of Claims : 14

(12) PATENT APPLICATION PUBLICATION
(19) INDIA
(22) Date of filing of Application :10/09/2012
(21) Application No.7798/CHENP/2012 A
(43) Publication Date : 14/03/2014

(54) Title of the invention : METHOD FOR OBTAINING MATERIALS WITH SUPERPARAMAGNETIC PROPERTIES

(51) International classification :H01F1/44,C01G49/02,B82B1/00
(31) Priority Document No :P201030333
(32) Priority Date :08/03/2010
(33) Name of priority country :Spain
(86) International Application No :PCT/ES2011/070145
Filing Date :07/03/2011
(87) International Publication No :WO 2011/110711
(61) Patent of Addition to Application Number :NA
Filing Date :NA
(62) Divisional to Application Number :NA
Filing Date :NA

(71)**Name of Applicant :**
1)CONSEJO SUPERIOR DE INVESTIGACIONES CIENT FICAS (CSIC)
Address of Applicant :Serrano 117 E 28006 Madrid Spain
(72)**Name of Inventor :**
1)RUIZ HITZKY Eduardo
2)ARANDA GALLEGO Mara Pilar
3)GONZLEZ ALFARO Yorexis

(57) Abstract :
The present invention relates to a process for obtaining materials based on the treatment of solid by interaction with ferrofluids to give the final product a moderate temperature superparamagnetic behavior. These superparamagnetic materials are the result of the assembly of metal oxide nanoparticles associated to a compound with effect surfactant, such as oleic acid, which are provided by a separate non-aqueous ferrofluid solids type, preferably provided with adsorbing properties, absorbent or support of reactants and products. The invention also concerns the material obtained by this procedure and their use in various applications such as adsorbents, sensors, ion exchangers in the removal of toxic or radioactive contaminants, in chromatographic separation processes, in medical and biological applications, as carriers of biologically derived materials such as enzymes, as fillers in polymers, absorption of electromagnetic radiation as well as metal oxide precursors and catalysts.

No. of Pages : 25 No. of Claims : 19

(12) PATENT APPLICATION PUBLICATION
(19) INDIA
(22) Date of filing of Application :22/10/2012
(21) Application No.9037/CHENP/2012 A
(43) Publication Date : 14/03/2014

(54) Title of the invention : MOBILE COMMUNICATION SYSTEM

(51) International classification :H04W52/02,H04W72/04
(31) Priority Document No :2010-103487
(32) Priority Date :28/04/2010
(33) Name of priority country :Japan
(86) International Application No :PCT/JP2011/002406
Filing Date :25/04/2011
(87) International Publication No :WO 2011/135825 A1
(61) Patent of Addition to Application Number :NA
Filing Date :NA
(62) Divisional to Application Number :NA
Filing Date :NA

(71)**Name of Applicant :**
1)Mitsubishi Electric Corporation
Address of Applicant :7 3Marunouchi 2 chome Chiyoda ku Tokyo 1008310 Japan
(72)**Name of Inventor :**
1)MAEDA Miho
2)MOCHIZUKI Mitsuru

(57) Abstract :
A mobile communication system includes a plurality of eNBs that wirelessly communicate with UEs and an MCE that controls the eNBs. The MCE provides MBSFN subframes (MCE) involving radio resources that transmit reference signals for measuring electric power to UEs at a lower frequency than normal to the eNBs. In addition to the MBSFN subframes (MCE) provided by the MCE the eNBs specify MBSFN subframes (eNB) involving radio resources that transmit reference signals to UEs at a lower frequency than normal and transmit the reference signals in the MBSFN subframes (MCE) and the MBSFN subframes (eNB) to the UEs. As a result of this configuration reference signals for measuring electric power can be transmitted at a lower frequency than normal enabling the consumption of electric power in an infrastructure to be reduced.

No. of Pages : 160 No. of Claims : 8

(12) PATENT APPLICATION PUBLICATION
(19) INDIA
(22) Date of filing of Application :26/09/2012
(21) Application No.8255/CHENP/2012 A
(43) Publication Date : 14/03/2014

(54) Title of the invention : IMPLANT CANNULA HAVING AN IMPLANT AND A METHOD FOR SECURING IMPLANTS IN AN INJECTION CANNULA

(51) International classification :A61K38/00,A61L31/00,A61B17/34
(31) Priority Document No :10 2010 013 898.3
(32) Priority Date :01/04/2010
(33) Name of priority country:Germany
(86) International Application No :PCT/EP2011/000763
Filing Date :17/02/2011
(87) International Publication No :WO 2011/120608
(61) Patent of Addition to Application Number :NA
Filing Date :NA
(62) Divisional to Application Number :NA
Filing Date :NA

(71)**Name of Applicant :**
1)ACINO AG
Address of Applicant :Am Windfeld 35 83714 Miesbach Germany
(72)**Name of Inventor :**
1)SPILGIES Heiko

(57) Abstract :
The invention relates to an injection cannula having an implant detachably secured in the cannula. The invention further relates to a method for detachably securing an implant in an injection cannula.

No. of Pages : 34 No. of Claims : 23

(12) PATENT APPLICATION PUBLICATION
(19) INDIA
(22) Date of filing of Application :26/09/2012
(21) Application No.8256/CHENP/2012 A
(43) Publication Date : 14/03/2014

(54) Title of the invention : GASIFICATION OF SULPHITE THICK LIQUOR

(51) International classification :D21C11/12,D21C11/06,D21C11/02
(31) Priority Document No :10502995
(32) Priority Date :30/03/2010
(33) Name of priority country:Sweden
(86) International Application No :PCT/SE2011/050350
Filing Date :29/03/2011
(87) International Publication No :WO 2011/123034
(61) Patent of Addition to Application Number :NA
Filing Date :NA
(62) Divisional to Application Number :NA
Filing Date :NA

(71)**Name of Applicant :**
1)CHEMREC AB
Address of Applicant :Floragatan 10B S 114 31 Stockholm Sweden
(72)**Name of Inventor :**
1)LAND„LV Ingvar
2)FURUSJ– Erik
3)STARE Ragnar

(57) Abstract :
Method for recovering chemicals and energy from sulphite thick liquor said sulphite thick liquor being obtained when producing pulp by chemical delignification of fibrous raw material using a sulphite pulping process said sulphite thick liquor comprising organic and inorganic compounds; the method comprising processing of said organic and inorganic compounds at a temperature above 800 °C whereby producing partly at least one phase of a liquid material and partly at least one phase of a gaseous material wherein said processing is carried out by gasification of said sulphite thick liquor in a gasification reactor (2) at sub stoichiometric conditions and in the presence of an oxidizing medium; said reactor (2) having an opening in its bottom in the form of a chute (5) which opens directly into a quench compartment (38).

No. of Pages : 28 No. of Claims : 18

(12) PATENT APPLICATION PUBLICATION
(19) INDIA
(22) Date of filing of Application :26/09/2012
(21) Application No.8258/CHENP/2012 A
(43) Publication Date : 14/03/2014

(54) Title of the invention : METHOD OF FORMING A FILM MADE OF A FLUOROPOLYMER OF THE POLYVINYLIDENE FLUORIDE TYPE THAT CAN BE USED AS A SEPARATOR FOR A LITHIUM BATTERY

(51) International classification	:H01M2/16,H01M10/052,B01D67/00
(31) Priority Document No	:1001366
(32) Priority Date	:01/04/2010
(33) Name of priority country	:France
(86) International Application No	:PCT/FR2011/000161
Filing Date	:22/03/2011
(87) International Publication No	:WO 2011/121190
(61) Patent of Addition to Application Number	:NA
Filing Date	:NA
(62) Divisional to Application Number	:NA
Filing Date	:NA

(71)**Name of Applicant :**
1)COMMISSARIAT A LENERGIE ATOMIQUE ET AUX ENERGIES ALTERNATIVES
Address of Applicant :25 rue Leblanc Btiment Le Ponant D F 75015 Paris France
2)CENTRE NATIONAL DE LA RECHERCHE SCIENTIFIQUE
(72)**Name of Inventor :**
1)PATOUX Sbastien
2)ALLOIN Fannie
3)DANIEL Lise

(57) Abstract :
A film made of a fluoropolymer of the polyvinylidene fluoride type having properties suitable for use as a lithium battery separator is produced using a phase inversion technique in which a solution containing the fluoropolymer is brought into the presence of an atmosphere laden with water vapour so as to precipitate the fluoropolymer. The fluoropolymer may for example be precipitated by placing the support on which the solution is deposited in which the fluoropolymer had been dissolved beforehand in an enclosure containing an atmosphere laden with water vapour and thermostatted at a temperature of between 30°C and 70°C. The relative humidity during precipitation of the fluoropolymer is advantageously between about 60% and about 98%.

No. of Pages : 21 No. of Claims : 18

(12) PATENT APPLICATION PUBLICATION
(19) INDIA
(22) Date of filing of Application :19/10/2012
(21) Application No.9014/CHENP/2012 A
(43) Publication Date : 14/03/2014

(54) Title of the invention : TIME DELAY VALVE

(51) International classification :F15B21/10,F16K31/122
(31) Priority Document No :2010152475
(32) Priority Date :15/06/2010
(33) Name of priority country :Japan
(86) International Application No :PCT/JP2011/063005
Filing Date :07/06/2011
(87) International Publication No :WO 2011/158695
(61) Patent of Addition to Application Number :NA
Filing Date :NA
(62) Divisional to Application Number :NA
Filing Date :NA

(71)**Name of Applicant :**
1)KOSMEK LTD.
Address of Applicant :2 1 5 Murotani Nishi ku Kobe shi Hyogo 6512241 Japan
(72)**Name of Inventor :**
1)ARISATO Akira

(57) Abstract :
A time delay valve is provided with: an open/close valve (7) which opens/closes the flow of air between a first port (P) to which compressed air is supplied and a second port (A) which is connected to the exterior of a casing; and a delay mechanism (8) which opens the abovementioned open/close valve (7) after a predetermined period of time. The delay mechanism (8) is equipped with: a metering valve (22) in communication with the first port (P); a piston (36) connected to the abovementioned open/close valve (7); a compression chamber (40) in communication with a pressure receiving surface (37) of the piston (36); and a communication path (42) communicating between a restriction passage (28) of the abovementioned metering valve (22) and the abovementioned compression chamber (40). When the compressed air supplied to the abovementioned compression chamber (40) from the first port (P) through the restriction passage (28) and the abovementioned communication path (42) reaches a set pressure the valve opening force acting on the abovementioned piston (36) overcomes the valve closing force acting on the abovementioned open/close valve (7) and opens said open/close valve (7). Thus the compressed air from the first port (P) is supplied to the exterior of the casing through the second port (A).

No. of Pages : 20 No. of Claims : 6

(12) PATENT APPLICATION PUBLICATION
(19) INDIA
(22) Date of filing of Application :21/09/2012
(21) Application No.8166/CHENP/2012 A
(43) Publication Date : 14/03/2014

(54) Title of the invention : ELECTRO MECHANICAL DRUG DELIVERY DEVICE

(51) International classification :A61M5/00
(31) Priority Document No :61/318118
(32) Priority Date :26/03/2010
(33) Name of priority country :U.S.A.
(86) International Application No :PCT/EP2011/054649
Filing Date :25/03/2011
(87) International Publication No :WO 2011/117404
(61) Patent of Addition to Application Number :NA
Filing Date :NA
(62) Divisional to Application Number :NA
Filing Date :NA

(71)**Name of Applicant :**
1)SANOFI AVENTIS DEUTSCHLAND GMBH
Address of Applicant :Br¼ningstrasse 50 65929 Frankfurt Germany
(72)**Name of Inventor :**
1)WIMPENNY Steven
2)OHARE Aidan Michael
3)YATES Barry
4)DAY Shane Alistair

(57) Abstract :
An electro mechanical drug delivery device (800 821 850 952) comprises a main body (802 822 852 902 956) having a distal end (808 828 910) and a proximal end (806 826 958). The distal end (808 828 910) is configured to attach to a dispense interface. A separable housing (804 824 854 904 962) that can prevent an administration of a drug by the drug delivery device (800 821 850 952) the housing configured to cover at least a portion of the distal end (808 828 910) of the main body (802 822 852 902 956) when the separable housing (804 824 854 904 962) is coupled to the main body (802 822 852 902 956) of the drug delivery device (800 821 850 952). A conduction element (856 906) is provided by the main body (802 822 852 902 956) and configured for establishing an electrical connection with an electrical connector (849 862 968). Establishment of the electrical connection is prevented when the housing does not cover at least a portion of the distal end (808 828 910) of the main body (802 822 852 902 956). The electrical connection may be established when the housing covers at least a portion of the distal end (808 828 910) of the main body (802 822 852 902 956) of the drug delivery device (800 821 850 952).

No. of Pages : 141 No. of Claims : 15

(12) PATENT APPLICATION PUBLICATION
(19) INDIA
(22) Date of filing of Application :21/09/2012
(21) Application No.8167/CHENP/2012 A
(43) Publication Date : 14/03/2014

(54) Title of the invention : DEODORANT FIBER STRUCTURE

(51) International classification :D06M13/207,D06M13/355,D06M15/507
(31) Priority Document No :2010069769
(32) Priority Date :25/03/2010
(33) Name of priority country :Japan
(86) International Application No :PCT/JP2011/057289
Filing Date :25/03/2011
(87) International Publication No :WO 2011/118749
(61) Patent of Addition to Application Number :NA
Filing Date :NA
(62) Divisional to Application Number :NA
Filing Date :NA

(71)**Name of Applicant :**
1)TORAY INDUSTRIES INC.
Address of Applicant :1 1 Nihonbashi Muromachi 2 chome Chuo ku Tokyo 1038666 Japan
(72)**Name of Inventor :**
1)KARASAWA Rumi
2)KIMURA Chika
3)IKEYAMA Masami
4)ONO Takahiro
5)TAKEDA Keiji

(57) Abstract :
Disclosed is a polyester based fiber structure which exerts excellent washing durability and deodorizing properties and which is characterized by being attached with a substance comprising a hydroxy acid derivative and/or hydroxy acid.

No. of Pages : 17 No. of Claims : 9

(12) PATENT APPLICATION PUBLICATION
(19) INDIA
(22) Date of filing of Application :17/10/2012
(21) Application No.8897/CHENP/2012 A
(43) Publication Date : 14/03/2014

(54) Title of the invention : IMPROVED BLENDS OF POLYARYLENE ETHERS AND POLYARYLENE SULFIDES

(51) International classification :C08L81/02,C08L81/06,C08L71/10
(31) Priority Document No :10157281.6
(32) Priority Date :23/03/2010
(33) Name of priority country :EPO
(86) International Application No :PCT/EP2011/054132
Filing Date :18/03/2011
(87) International Publication No :WO 2011/117153
(61) Patent of Addition to Application Number :NA
Filing Date :NA
(62) Divisional to Application Number :NA
Filing Date :NA

(71)**Name of Applicant :**
1)BASF SE
Address of Applicant :67056 Ludwigshafen Germany
(72)**Name of Inventor :**
1)WEBER Martin
2)MALETZKO Christian
3)ZEIHER Susanne
4)V–LKEL Mark
5)GNTHERBERG Norbert
6)BLUHM R¼diger
7)BRUCHMANN Bernd

(57) Abstract :
The present invention relates to thermoplastic molding compositions comprising the following components: (A1) at least one polyarylene ether having an average of at most 0.5 phenolic end groups per polymer chain, (A2) optionally at least one polyarylene ether having an average of at least 1.5 phenolic end groups per polymer chain, (B) at least one polyarylene sulfide, (C) at least one hyperbranched polymer selected from hyperbranched polycarbonates and hyperbranched polyesters, (D) optionally at least one functionalized polyarylene ether comprising carboxy groups, (E) optionally at least one fibrous or particulate filler, and (F) optionally further additives and/or processing aids. The present invention further relates to a process for producing the thermoplastic molding compositions of the invention, to the use of these for producing moldings, fibers, foams, or films, and to the resultant moldings, fibers, foams, and films.

No. of Pages : 46 No. of Claims : 21

(12) PATENT APPLICATION PUBLICATION
(19) INDIA
(22) Date of filing of Application :25/10/2012
(21) Application No.9099/CHENP/2012 A
(43) Publication Date : 14/03/2014

(54) Title of the invention : LANCING DEVICE HAVING AUTOMATIC TRIGGERING

(51) International classification :A61B5/151
(31) Priority Document No :10004578.0
(32) Priority Date :30/04/2010
(33) Name of priority country :EPO
(86) International Application No :PCT/EP2011/002083
Filing Date :26/04/2011
(87) International Publication No :WO 2011/134639
(61) Patent of Addition to Application Number :NA
Filing Date :NA
(62) Divisional to Application Number :NA
Filing Date :NA

(71)**Name of Applicant :**
1)ROCHE DIAGNOSTICS GMBH
Address of Applicant :68298 Mannheim Germany
2)F. HOFFMANN LA ROCHE AG
(72)**Name of Inventor :**
1)KEIL Michael

(57) Abstract :
The application relates to a lancing device for removing body fluids for diagnostic purposes comprising a coupled tensioning and trigger mechanism wherein the trigger mechanism is mechanically coupled to the tensioning mechanism such that upon actuation of the tensioning mechanism the lancing operation is automatically triggered by steady continuation of the tensioning movement and wherein the lancing operation thus triggered is carried out by a lancet (91).

No. of Pages : 52 No. of Claims : 13

(12) PATENT APPLICATION PUBLICATION
(19) INDIA
(22) Date of filing of Application :25/09/2012
(21) Application No.8234/CHENP/2012 A
(43) Publication Date : 14/03/2014

(54) Title of the invention : ESTER COMPOUND AND USE THEREOF

(51) International classification :A01N53/04,C07D233/78
(31) Priority Document No :2010081657
(32) Priority Date :31/03/2010
(33) Name of priority country :Japan
(86) International Application No :PCT/JP2011/057504
Filing Date :18/03/2011
(87) International Publication No :WO 2011/122509
(61) Patent of Addition to Application Number :NA
Filing Date :NA
(62) Divisional to Application Number :NA
Filing Date :NA

(71)**Name of Applicant :**
1)SUMITOMO CHEMICAL COMPANY LIMITED
Address of Applicant :27 1 Shinkawa 2 chome Chuo ku Tokyo 1048260 Japan
(72)**Name of Inventor :**
1)MATSUO Noritada

(57) Abstract :
345An ester compound represented by formula (1): wherein R represents hydrogen or methyl R represents hydrogen or C1 C4 alkyl and R represents hydrogen or C1 C4 alkyl; has an excellent pest control effect and is therefore useful as an active ingredient of a pest control agent.

No. of Pages : 78 No. of Claims : 30

(12) PATENT APPLICATION PUBLICATION
(19) INDIA
(22) Date of filing of Application :25/09/2012
(21) Application No.8236/CHENP/2012 A
(43) Publication Date : 14/03/2014

(54) Title of the invention : INFLUENZA VIRUS VACCINES AND USES THEREOF

(51) International classification :A61K39/145,A61P31/16,C07K14/11
(31) Priority Document No :61/319137
(32) Priority Date :30/03/2010
(33) Name of priority country :U.S.A.
(86) International Application No :PCT/US2011/030441
Filing Date :30/03/2011
(87) International Publication No :WO 2011/123495
(61) Patent of Addition to Application Number :NA
Filing Date :NA
(62) Divisional to Application Number :NA
Filing Date :NA

(71)**Name of Applicant :**
1)MOUNT SINAI SCHOOL OF MEDICINE
Address of Applicant :One Gustave L. Levy Place New York NY 10029 U.S.A.
(72)**Name of Inventor :**
1)GARCIA SASTRE Adolfo
2)LOWEN Anice C.
3)PALESE Peter
4)STEEL John

(57) Abstract :
Provided herein are influenza hemagglutinin stem domain polypeptides compositions comprising the same vaccines comprising the same and methods of their use.

No. of Pages : 246 No. of Claims : 73

(12) PATENT APPLICATION PUBLICATION
(19) INDIA
(22) Date of filing of Application :25/09/2012
(21) Application No.8237/CHENP/2012 A
(43) Publication Date : 14/03/2014

(54) Title of the invention : CONCEALED ZIPPER ASSEMBLY

(51) International classification :A44B19/00
(31) Priority Document No :61/309012
(32) Priority Date :01/03/2010
(33) Name of priority country :U.S.A.
(86) International Application No :PCT/US2011/026432
Filing Date :28/02/2011
(87) International Publication No :WO 2011/109272
(61) Patent of Addition to Application Number :NA
Filing Date :NA
(62) Divisional to Application Number :NA
Filing Date :NA

(71)**Name of Applicant :**
1)JOHNSON CONTROLS TECHNOLOGY COMPANY
Address of Applicant :915 East 32nd Street Holland MI 49423 U.S.A.
(72)**Name of Inventor :**
1)SMITH Sandra L.

(57) Abstract :
A concealed zipper assembly and a method of binding a first material to a second material with the concealed zipper assembly.

No. of Pages : 22 No. of Claims : 17

(12) PATENT APPLICATION PUBLICATION
(19) INDIA
(22) Date of filing of Application :25/09/2012
(21) Application No.8239/CHENP/2012 A
(43) Publication Date : 14/03/2014

(54) Title of the invention : PHYSICAL DOWNLINK SHARED CHANNEL (PDSCH) PROTECTION

(51) International classification :H04L5/00,H04W72/04
(31) Priority Document No :61/318171
(32) Priority Date :26/03/2010
(33) Name of priority country :U.S.A.
(86) International Application No :PCT/US2011/030002
Filing Date :25/03/2011
(87) International Publication No :WO 2011/119964
(61) Patent of Addition to Application Number :NA
Filing Date :NA
(62) Divisional to Application Number :NA
Filing Date :NA

(71)**Name of Applicant :**
1)QUALCOMM INCORPORATED
Address of Applicant :ATTN: International IP Administration 5775 Morehouse Drive San Diego California 92121 1714 U.S.A.
(72)**Name of Inventor :**
1)YOO Taesang
2)LUO Tao
3)WEI Yongbin
4)MALLADI Durga Prasad

(57) Abstract :
According to certain aspects resource blocks used for pysical downlink shared channel (PDSCH) transmissions may be allocated in a manner to manage interference in neighboring cells. According to certain aspects one or more guard RBs may be utilized when transmitting PDSCH in a first cell an effort to reduce interference by tranmissions in a second cell.

No. of Pages : 44 No. of Claims : 36

(12) PATENT APPLICATION PUBLICATION
(19) INDIA
(22) Date of filing of Application :05/10/2012
(21) Application No.8554/CHENP/2012 A
(43) Publication Date : 14/03/2014

(54) Title of the invention : GREEN FORMED BODY AND PROCESS FOR PRODUCTION OF HONEYCOMB STRUCTURE

(51) International classification :C04B38/06,B01D39/20,B28B3/20
(31) Priority Document No :2010-282006
(32) Priority Date :17/12/2010
(33) Name of priority country :Japan
(86) International Application No :PCT/JP2011/078806
Filing Date :13/12/2011
(87) International Publication No :WO 2012/081580 A1
(61) Patent of Addition to Application Number :NA
Filing Date :NA
(62) Divisional to Application Number :NA
Filing Date :NA

(71)**Name of Applicant :**
1)SUMITOMO CHEMICAL COMPANY LIMITED
Address of Applicant :27 1 Shinkawa 2 chome Chuo ku Tokyo 1048260 Japan
(72)**Name of Inventor :**
1)UOE Kousuke
2)YAMANISHI Osamu

(57) Abstract :
The present invention provides a green formed body in which the porosity of a honeycomb structure can be controlled easily. One embodiment of the present invention is a green formed body which comprises a honeycomb like cylindrical body (70) in which multiple through holes (70a) that are almost parallel to one another are formed wherein the cylindrical body (70) comprises a ceramic raw material powder and a fluorine source and the ceramic raw material powder is burned to form an aluminum titanate ceramic and/or a cordierite ceramic.

No. of Pages : 43 No. of Claims : 5

(12) PATENT APPLICATION PUBLICATION
(19) INDIA
(22) Date of filing of Application :05/11/2012
(21) Application No.9410/CHENP/2012 A
(43) Publication Date : 14/03/2014

(54) Title of the invention : METHOD FOR GENERATING AND REBUILDING A STEREOSCOPIC COMPATIBLE VIDEO STREAM AND RELATED CODING AND DECODING DEVICES

(51) International classification :H04N13/00
(31) Priority Document No :TO2010A000282
(32) Priority Date :12/04/2010
(33) Name of priority country :Italy
(86) International Application No :PCT/IB2011/051504
Filing Date :07/04/2011
(87) International Publication No :WO 2011/128818
(61) Patent of Addition to Application Number :NA
Filing Date :NA
(62) Divisional to Application Number :NA
Filing Date :NA

(71)**Name of Applicant :**
1)SISVEL TECHNOLOGY S.R.L.
Address of Applicant :Via Castagnole 59 I 10060 None (to) Italy
(72)**Name of Inventor :**
1)BALLOCCA Giovanni
2)DAMATO Paolo

(57) Abstract :
The invention relates to a method for generating a digital stereoscopic video stream (101) comprising container frames (C) said container frames (C) comprising information about a right image (R) and a left image (L) wherein when coding said digital stereoscopic video stream (101) at least one metadatum (M) is entered which is adapted to identify a region of a container frame (C) containing only one of said two images (L R).

No. of Pages : 20 No. of Claims : 24

(12) PATENT APPLICATION PUBLICATION
(19) INDIA
(22) Date of filing of Application :05/11/2012
(21) Application No.9412/CHENP/2012 A
(43) Publication Date : 14/03/2014

(54) Title of the invention : ABSORBENT ARTICLE AND METHOD OF MANUFACTURING ABSORBENT ARTICLE

(51) International classification	:A61F13/15,A61F13/472,A61F13/539
(31) Priority Document No	:2010087989
(32) Priority Date	:06/04/2010
(33) Name of priority country	:Japan
(86) International Application No	:PCT/JP2011/059130
Filing Date	:06/04/2011
(87) International Publication No	:WO 2011/126143
(61) Patent of Addition to Application Number	:NA
Filing Date	:NA
(62) Divisional to Application Number	:NA
Filing Date	:NA

(71)**Name of Applicant :**
1)UNICHARM CORPORATION
Address of Applicant :182 Shimobun Kinsei cho Shikokuchuo shi Ehime 7990111 Japan
(72)**Name of Inventor :**
1)KUDO Jun
2)KINOSHITA Hideyuki
3)TAKAHASHI Yuji
4)MINAMI Mari

(57) Abstract :
In an absorbent article 1 according to the present invention a longitudinal direction compression groove 14A is formed along a longitudinal direction L of the absorbent article 1 by a compression process performed from the topsheet 12 side a width direction compression grooves 14B are formed along a width direction W of the absorbent article 1 by a compression process performed from the topsheet 12 side wherein the longitudinal direction compression groove 14A includes a high compression region 21 a medium compression region 22 and a low compression region 23 and the width direction compression groove 14B includes the high compression region 21 and the medium compression region 22 and the low compression region 23 is disposed over the longitudinal direction compression groove 14A in the width direction W.

No. of Pages : 25 No. of Claims : 8

(12) PATENT APPLICATION PUBLICATION
(19) INDIA
(22) Date of filing of Application :24/09/2012
(21) Application No.8180/CHENP/2012 A
(43) Publication Date : 14/03/2014

(54) Title of the invention : FITTING CONFIRMATION CONSTRUCTION OF CONNECTOR FOR CONNECTING CIRCUIT BOARD

(51) International classification :H01R13/627,H01R13/641,H01R12/79
(31) Priority Document No :2010072777
(32) Priority Date :26/03/2010
(33) Name of priority country :Japan
(86) International Application No :PCT/JP2011/058369
Filing Date :25/03/2011
(87) International Publication No :WO 2011/118852
(61) Patent of Addition to Application Number :NA
Filing Date :NA
(62) Divisional to Application Number :NA
Filing Date :NA

(71)**Name of Applicant :**
1)YAZAKI CORPORATION
Address of Applicant :4 28 Mita 1 chome Minato ku Tokyo 1088333 Japan
(72)**Name of Inventor :**
1)OHYAMA Kouichi

(57) Abstract :
A fitting confirmation construction includes a confirmation part in a first connector and a confirmation opening in a second connector. A rib is provided in the confirmation opening. A height of the confirmation part is equal to a height of the rib and the confirmation part and the rib are positioned on a same line on a viewing direction which is viewed from an obliquely upper position rearward in an inserting direction of the second connector through the confirmation opening in a state that the second connector is completely fit with the first connector.

No. of Pages : 30 No. of Claims : 5

(12) PATENT APPLICATION PUBLICATION
(19) INDIA
(22) Date of filing of Application :24/09/2012
(21) Application No.8183/CHENP/2012 A
(43) Publication Date : 14/03/2014

(54) Title of the invention : METHOD OF MANUFACTURING EPSILON CAPROLACTAM

(51) International classification :C07D201/16,C07D223/10
(31) Priority Document No :2010045649
(32) Priority Date :02/03/2010
(33) Name of priority country :Japan
(86) International Application No :PCT/JP2011/001176
Filing Date :01/03/2011
(87) International Publication No :WO 2011/108251
(61) Patent of Addition to Application Number :NA
Filing Date :NA
(62) Divisional to Application Number :NA
Filing Date :NA

(71)**Name of Applicant :**
1)SUMITOMO CHEMICAL COMPANY LIMITED
Address of Applicant :27 1 Shinkawa 2 chome Chuo ku Tokyo 1048260 Japan
(72)**Name of Inventor :**
1)NAGAMI Hideto

(57) Abstract :
An epsilon caprolactam manufacturing method capable of manufacturing in good yield high quality epsilon caprolactam containing less impurity has an epsilon caprolactam purification step A of obtaining purified epsilon caprolactam from raw epsilon caprolactam by applying a drop crystallization method a first stage epsilon caprolactam recovery step B of obtaining first recovered epsilon caprolactam and a first recovered mother liquor by applying an evaporative crystallization method to a crystallization mother liquor obtained in the epsilon caprolactam purification step A and a second stage epsilon caprolactam recovery step C of obtaining second recovered purified epsilon caprolactam by applying a melt crystallization method to the first recovered mother liquor first recovered epsilon caprolactam being recovered as a raw material for the epsilon caprolactam purification step A and second recovered purified epsilon caprolactam being recovered as a raw material for the epsilon caprolactam purification step A and/or the first stage epsilon caprolactam recovery step B.

No. of Pages : 19 No. of Claims : 3

(12) PATENT APPLICATION PUBLICATION
(19) INDIA
(22) Date of filing of Application :25/10/2012
(21) Application No.9120/CHENP/2012 A
(43) Publication Date : 14/03/2014

(54) Title of the invention : ULTRASONIC NOZZLE FOR USE IN METALLURGICAL INSTALLATIONS AND METHOD FOR DIMENSIONING AN ULTRASONIC NOZZLE

(51) International classification :C21C5/46,F27B3/22,F27D3/16
(31) Priority Document No :10 2010 013 770.7
(32) Priority Date :31/03/2010
(33) Name of priority country :Germany
(86) International Application No :PCT/EP2011/054842
Filing Date :29/03/2011
(87) International Publication No :WO 2011/120976
(61) Patent of Addition to Application Number :NA
Filing Date :NA
(62) Divisional to Application Number :NA
Filing Date :NA

(71)**Name of Applicant :**
1)SMS SIEMAG AG
Address of Applicant :Eduard Schloemann Strae 4 40237 D¼sseldorf Germany
(72)**Name of Inventor :**
1)ODENTHAL Hans J¼rgen
2)SCHLTER Jochen
3)OLIVIER Herbert
4)KLIOUTCHNIKOV Igor

(57) Abstract :
Tie invention relates to a supersonic nozzle for use in metallurgical installations, in particular for the top blowing of oxygen in a Basic Oxygen Furnace (BOF) or an electric arc furnace (EAF), comprising a convergent portion and a divergent portion, which are adjacent to each other at a nozzle throat (JDK), wherein the supersonic nozzle is defined by the following group of nozzle forms in the respective design case thereof: (Tl)

No. of Pages : 42 No. of Claims : 13

(12) PATENT APPLICATION PUBLICATION
(19) INDIA
(22) Date of filing of Application :07/11/2012
(21) Application No.9460/CHENP/2012 A
(43) Publication Date : 14/03/2014

(54) Title of the invention : PACKAGE WITH UNIQUE OPENING DEVICE AND METHOD FOR OPENING PACKAGE

(51) International classification :B65D75/58,B65B5/02,B65B7/16
(31) Priority Document No :61/332420
(32) Priority Date :07/05/2010
(33) Name of priority country :U.S.A.
(86) International Application No :PCT/US2011/035313
Filing Date :05/05/2011
(87) International Publication No :WO 2011/140314
(61) Patent of Addition to Application Number :NA
Filing Date :NA
(62) Divisional to Application Number :NA
Filing Date :NA

(71)**Name of Applicant :**
1)POPPACK LLC
Address of Applicant :301 Junipero Serra Boulevard Suite 220 San Francisco California 94127 U.S.A.
(72)**Name of Inventor :**
1)PERELL William S.
2)SORENSEN Leif B.
3)RAPPAPORT Irving S.

(57) Abstract :
A package and method for opening the package are disclosed. The package includes a first film (11) and a second film (12) forming an enclosure and at least one tab area (16) and defining a package periphery (18) the enclosure defining an interior volume configured to receive a product. The package further includes first and second breachable bubbles (20 22) formed within first and second tab portions (24 26) of the at least one tab area (16). Upon application of pressure by a user the first and second breachable bubbles (20 22) breach. The package may be alternated between a first position wherein the first tab portion (24) and the second tab portion (26) are substantially sealed from each other to facilitate breaching and a second position wherein the first tab portion (24) and the second tab portion (26) are in fluid communication with each other.

No. of Pages : 37 No. of Claims : 20

(12) PATENT APPLICATION PUBLICATION
(19) INDIA
(22) Date of filing of Application :18/10/2012
(21) Application No.8954/CHENP/2012 A
(43) Publication Date : 14/03/2014

(54) Title of the invention : COLOR IMAGING DEVICE

(51) International classification :H04N9/07
(31) Priority Document No :2011-042831
(32) Priority Date :28/02/2011
(33) Name of priority country :Japan
(86) International Application No :PCT/JP2011/067420
Filing Date :29/07/2011
(87) International Publication No :WO 2012/117584 A1
(61) Patent of Addition to Application Number :NA
Filing Date :NA
(62) Divisional to Application Number :NA
Filing Date :NA

(71)**Name of Applicant :**
1)FUJIFILM Corporation
Address of Applicant :26 30 Nishiazabu 2 chome Minato ku Tokyo 1068620 Japan
(72)**Name of Inventor :**
1)TANAKA Seiji

(57) Abstract :
A color imaging device uses a color imaging element in which an RGB filter corresponding to each RGB color is positioned periodically and having a color filter arrangement containing a section where the G filter which contributes the most for acquisition of a luminance signal is positioned so as have two or more thereof in each of the horizontal vertical and diagonal (NE NW) directions (four directions). Also on the basis of the pixel values of the adjacent G pixels in each direction which of the four directions is the luminance correlation direction is determined by a minimum pixel interval. When calculating the pixel value for another color at the pixel location of the pixel to be subjected to simultaneous processing that was extracted from a mosaic image the value of the pixel of the other color is accurately estimated by making the determination and using the pixel value of the pixel of the other color present in the determined correlation direction.

No. of Pages : 43 No. of Claims : 13

(12) PATENT APPLICATION PUBLICATION
(19) INDIA
(22) Date of filing of Application :26/10/2012
(21) Application No.9132/CHENP/2012 A
(43) Publication Date : 14/03/2014

(54) Title of the invention : DATA TRANSMITTING METHOD BASE STATION APPARATUS AND MOBILE STATION APPARATUS

(51) International classification :H04W16/28,H04B7/04,H04J99/00
(31) Priority Document No :2010105398
(32) Priority Date :30/04/2010
(33) Name of priority country :Japan
(86) International Application No :PCT/JP2011/059785
Filing Date :21/04/2011
(87) International Publication No :WO 2011/136114
(61) Patent of Addition to Application Number :NA
Filing Date :NA
(62) Divisional to Application Number :NA
Filing Date :NA

(71)**Name of Applicant :**
1)NTT DOCOMO INC.
Address of Applicant :11 1 Nagatacho 2 chome Chiyoda ku Tokyo 1006150 Japan
(72)**Name of Inventor :**
1)KAKISHIMA Yuichi
2)TAOKA Hidekazu

(57) Abstract :
Even if a number of transmission antennas of a mobile station apparatus is different from a number of mobile station apparatus transmission antennas supported by a base station apparatus the data rate during a MIMO transmission can be increased up to a maximum. A base station apparatus (eNodeB) notifies to a mobile station apparatus (UE) a maximum supported number of mobile station apparatus (UE) antennas supported by the base station apparatus (eNodeB) (ST11). The mobile station apparatus (UE) compares the supported number of antennas with the number of transmission antennas of the mobile station apparatus (UE) selects the smaller number of antennas as a pseudo number of antennas (ST12) and notifies the pseudo number of antennas to the base station apparatus (eNodeB) (ST13). The base station apparatus (eNodeB) instructs the mobile station apparatus to transmit a data channel signal in accordance with the pseudo number of antennas (ST15). The mobile station apparatus (UE) transmits the data channel signal to the base station apparatus (eNodeB) in accordance with the pseudo number of antennas (ST20).

No. of Pages : 83 No. of Claims : 17

(12) PATENT APPLICATION PUBLICATION
(19) INDIA
(22) Date of filing of Application :07/11/2012
(21) Application No.9454/CHENP/2012 A
(43) Publication Date : 14/03/2014

(54) Title of the invention : BICYCLIC HETEROARYL COMPOUNDS AS GPR119 MODULATORS

(51) International classification :C07D401/14,C07D413/14,C07D417/12
(31) Priority Document No :61/331864
(32) Priority Date :06/05/2010
(33) Name of priority country :U.S.A.
(86) International Application No :PCT/US2011/035086
Filing Date :04/05/2011
(87) International Publication No :WO 2011/140160
(61) Patent of Addition to Application Number :NA
Filing Date :NA
(62) Divisional to Application Number :NA
Filing Date :NA

(71)**Name of Applicant :**
1)BRISTOL MYERS SQUIBB COMPANY
Address of Applicant :P.O. Box 4000 Route 206 and ProvinceLine Road Princeton New Jersey 08543 4000 U.S.A.
(72)**Name of Inventor :**
1)YE Xiang Yang
2)WACKER Dean A.
3)ROBL Jeffrey A.
4)WANG Ying

(57) Abstract :
Novel compounds of structure Formula I: or an enantiomer diastereomer tautomer prodrug or salt thereof wherein A D Di E J L n Q Rand Rare defined herein are provided which are GPR119 G protein coupled receptor modulators. GPR119 G protein coupled receptor modulators are useful in treating preventing or slowing the progression of diseases requiring GPR119 G protein coupled receptor modulator therapy. Thus the disclosure also concerns compositions comprising these novel compounds and methods of treating diseases or conditions related to the activity of the GPR119 G protein coupled receptor by using any of these novel compounds or a composition comprising any of such novel compounds.

No. of Pages : 282 No. of Claims : 15

(12) PATENT APPLICATION PUBLICATION
(19) INDIA
(22) Date of filing of Application :07/11/2012
(21) Application No.9458/CHENP/2012 A
(43) Publication Date : 14/03/2014

(54) Title of the invention : METHOD AND ARRANGEMENT FOR VOLTAGE MEASUREMENT

(51) International classification :G01R15/18
(31) Priority Document No :10159871.2
(32) Priority Date :14/04/2010
(33) Name of priority country :EPO
(86) International Application No :PCT/EP2011/055708
Filing Date :12/04/2011
(87) International Publication No :WO 2011/128333
(61) Patent of Addition to Application Number :NA
Filing Date :NA
(62) Divisional to Application Number :NA
Filing Date :NA

(71)**Name of Applicant :**
1)ABB TECHNOLOGY AG
Address of Applicant :Affolternstrasse 44 CH 8050 Z¼rich Switzerland
(72)**Name of Inventor :**
1)WAHLROOS Ari
2)ALTONEN Janne
3)M„H–NEN Pentti

(57) Abstract :
A method and an arrangement for voltage measurement with a transformer configuration comprising three single pole voltage transformers (11 12 13) having tertiary windings open delta connected with each other the arrangement comprising means arranged to apply a correction to measured secondary voltages on the basis of one or more parameters of the voltage transformers (11 12 13) and/or one or more quantities in a known relation to one or more parameters of the voltage transformers one or more parameters of a circuit connected to the secondary windings (41 42 43) and/or one or more quantities in a known relation to one or more parameters of the circuit connected to the secondary windings and one or more parameters of a circuit connected to the tertiary windings (31 32 33) and/or one or more quantities in a known relation to one or more parameters of the circuit connected to the tertiary windings.

No. of Pages : 29 No. of Claims : 16

(12) PATENT APPLICATION PUBLICATION
(19) INDIA
(22) Date of filing of Application :06/11/2012
(21) Application No.9440/CHENP/2012 A
(43) Publication Date : 14/03/2014

(54) Title of the invention : MOBILE SIDE TERMINAL APPARATUS POSITION TRANSMISSION METHOD AND COMPUTER PROGRAM

(51) International classification :G01C21/00,G08G1/13,H04M1/00
(31) Priority Document No :2010-107465
(32) Priority Date :07/05/2010
(33) Name of priority country :Japan
(86) International Application No :PCT/JP2011/060588
Filing Date :06/05/2011
(87) International Publication No :WO 2011/138962 A1
(61) Patent of Addition to Application Number :NA
Filing Date :NA
(62) Divisional to Application Number :NA
Filing Date :NA

(71)**Name of Applicant :**
1)NEC Corporation
Address of Applicant :7 1 Shiba 5 chome Minato ku Tokyo 1088001 Japan
(72)**Name of Inventor :**
1)ODA Toshiaki

(57) Abstract :
This invention provides a mobile side terminal apparatus which comprises: a path information storing unit for storing path information related to a path along which the user moves; a position acquiring unit for acquiring the current position of the user; a display unit for displaying both the path information stored in the path information storing unit and the current position acquired by the position acquiring unit; and a position transmission unit for transmitting the current position acquired by the position acquiring unit to another information processing apparatus that is operative to store the path information and display the path information and the current position.

No. of Pages : 43 No. of Claims : 5

(12) PATENT APPLICATION PUBLICATION
(19) INDIA
(22) Date of filing of Application :14/11/2012
(21) Application No.9604/CHENP/2012 A
(43) Publication Date : 14/03/2014

(54) Title of the invention : METHOD AND ARRANGEMENT FOR DETERMINING IMPEDANCE VALUES

(51) International classification :G01R27/16,G01R35/02
(31) Priority Document No :10160295.1
(32) Priority Date :19/04/2010
(33) Name of priority country :EPO
(86) International Application No :PCT/EP2011/056011
Filing Date :15/04/2011
(87) International Publication No :WO 2011/131581
(61) Patent of Addition to Application Number :NA
Filing Date :NA
(62) Divisional to Application Number :NA
Filing Date :NA

(71)**Name of Applicant :**
1)ABB TECHNOLOGY AG
Address of Applicant :Affolternstrasse 44 CH 8050 Z¼rich Switzerland
(72)**Name of Inventor :**
1)WAHLROOS Ari
2)ALTONEN Janne

(57) Abstract :
A method and an arrangement for determining values of impedance parameters related to a transformer configuration comprising three single pole voltage transformers (11 12 13) each having at least a primary winding (21 22 23) a secondary winding (41 42 43) and a tertiary winding (31 32 33) wherein the primary windings are connected to phases (PA PB PC) of a three phase electric system wherein the arrangement comprises means for conducting an earth fault in the three phase electric system; means for measuring a primary voltage from the faulted phase; means for measuring secondary voltages from the secondary windings (41 42 43); and means for determining values of one or more impedance parameters related to the transformer configuration on the basis of the measured primary voltage the measured secondary voltages and an equation relating the primary voltage to the secondary voltages and the one or more impedance parameters.

No. of Pages : 28 No. of Claims : 15

(12) PATENT APPLICATION PUBLICATION
(19) INDIA
(22) Date of filing of Application :14/11/2012
(21) Application No.9605/CHENP/2012 A
(43) Publication Date : 14/03/2014

(54) Title of the invention : LIQUID CRYSTAL DISPLAY DEVICE

(51) International classification	:G02F1/1339,G02B5/20,G02F1/1335
(31) Priority Document No	:2010096035
(32) Priority Date	:19/04/2010
(33) Name of priority country	:Japan
(86) International Application No	:PCT/JP2011/051313
Filing Date	:25/01/2011
(87) International Publication No	:WO 2011/132439
(61) Patent of Addition to Application Number	:NA
Filing Date	:NA
(62) Divisional to Application Number	:NA
Filing Date	:NA

(71)**Name of Applicant :**
1)Sharp Kabushiki Kaisha
Address of Applicant :22 22 Nagaike cho Abeno ku Osaka shi Osaka 5458522 Japan
(72)**Name of Inventor :**
1)AKITOMO Masaharu
2)ITOH Ryohki

(57) Abstract :
Disclosed is a liquid crystal display device which has a pair of substrates with a gap held therebetween by a plurality of pillar shaped spacers and a liquid crystal layer sandwiched between the pair of substrates with multiple color subpixels constituting one pixel. One of the pair of substrates has multiple color color layers and a light shielding layer. At least one of the multiple color color layers has a region where color layers of the same color are integrally disposed at each neighboring subpixel; a straight portion; and an extended portion extending from the straight portion. At least one of the plurality of pillar shaped spacers is disposed to overlap the extended portion and brought into contact with the substrate on a surface thereof the shape of which is generally rhombic or generally circular. The contour of the extended portion is shaped to follow the contour of the pillar shaped spacer that is provided to overlap the extended portion. This makes it possible to provide light shielding for the pillar shaped spacer without degradation in aperture ratio even in the event of a misalignment.

No. of Pages : 46 No. of Claims : 18

(12) PATENT APPLICATION PUBLICATION
(19) INDIA
(22) Date of filing of Application :14/11/2012
(21) Application No.9606/CHENP/2012 A
(43) Publication Date : 14/03/2014

(54) Title of the invention : METHOD OF PREPARING A FLEXOGRAPHIC PRINTING MASTER

(51) International classification :B41C1/00
(31) Priority Document No :10163064.8
(32) Priority Date :18/05/2010
(33) Name of priority country :EPO
(86) International Application No :PCT/EP2011/057946
Filing Date :17/05/2011
(87) International Publication No :WO 2011/144596
(61) Patent of Addition to Application Number :NA
Filing Date :NA
(62) Divisional to Application Number :NA
Filing Date :NA

(71)**Name of Applicant :**
1)AGFA GRAPHICS NV
Address of Applicant :IP Department 3622 Septestraat 27 B 2640 Mortsel Belgium
(72)**Name of Inventor :**
1)GULLENTOPS Chris
2)DAEMS Eddie R.
3)VANMAELE Luc

(57) Abstract :
A method of preparing a flexographic printing master wherein an optional elastomeric floor (500) an optional mesa relief (600) and an image relief (700) are applied in this order on a flexographic printing support (1) by applying and curing fluid droplets thereby building up a plurality of layers of fluid on top of each other characterized in that each fluid droplet applied is at least partially cured before an adjacent fluid droplet is subsequently applied with the exception that a fluid droplet applied during building up at least one layer of fluid is not cured before an adjacent fluid droplet of the same layer is subsequently applied.

No. of Pages : 40 No. of Claims : 15

(12) PATENT APPLICATION PUBLICATION
(19) INDIA
(22) Date of filing of Application :26/10/2012
(21) Application No.9165/CHENP/2012 A
(43) Publication Date : 14/03/2014

(54) Title of the invention : MULTI FLAME BURNER WITH FLAME

(51) International classification :F23D14/04,F23D14/56,F23D14/26
(31) Priority Document No :10 2010 028 396.7
(32) Priority Date :29/04/2010
(33) Name of priority country :Germany
(86) International Application No :PCT/EP2011/051942
Filing Date :10/02/2011
(87) International Publication No :WO 2011/134687
(61) Patent of Addition to Application Number :NA
Filing Date :NA
(62) Divisional to Application Number :NA
Filing Date :NA

(71)**Name of Applicant :**
1)LINDE AKTIENGESELLSCHAFT
Address of Applicant :Klosterhofstrae 1 80331 M¼nchen Germany
(72)**Name of Inventor :**
1)IMGRUNDT Anton
2)STOCKER Johann

(57) Abstract :
The invention relates to a multi flame burner comprising burner nozzles (10 15) that can be supplied with combustible gas especially for thermal material treatment methods. According to the invention at least one of the burner nozzles (10 15) is provided with at least one secondary nozzle opening (40) arranged at the side of a main nozzle arrangement (30) used to produce a working flame (60 70) said secondary nozzle opening being used to produce a secondary flame (80) in the direction of at least one adjacent burner nozzle (10 15).

No. of Pages : 19 No. of Claims : 9

(12) PATENT APPLICATION PUBLICATION
(19) INDIA
(22) Date of filing of Application :07/11/2012
(21) Application No.9471/CHENP/2012 A
(43) Publication Date : 14/03/2014

(54) Title of the invention : IGNITER INCLUDING A CORONA ENHANCING ELECTRODE TIP

(51) International classification :H01T13/46,H01T13/52,H01T21/02
(31) Priority Document No :61/323458
(32) Priority Date :13/04/2010
(33) Name of priority country :U.S.A.
(86) International Application No :PCT/US2011/032249
Filing Date :13/04/2011
(87) International Publication No :WO 2011/130365
(61) Patent of Addition to Application Number :NA
Filing Date :NA
(62) Divisional to Application Number :NA
Filing Date :NA

(71)**Name of Applicant :**
1)FEDERAL MOGUL IGNITION COMPANY
Address of Applicant :26555 Northwestern Highway Southfield MI 48033 U.S.A.
(72)**Name of Inventor :**
1)LYKOWSKI James D.
2)HAMPTON Keith

(57) Abstract :
An igniter (20) emitting an electrical field including a plurality of streamers forming a corona includes a corona enhancing tip (52) at an electrode firing end (28). The corona enhancing tip (52) includes an emitting member (58) such as a wire layer or sintered mass formed of a precious metal and disposed on a base member (54). The base member (54) is formed of a nickel alloy. The emitting member (58) has a lower electrical erosion rate and chemical corrosion rate than the base member (54). The emitting member (58) presents the smallest spherical radius of the corona enhancing tip (52) at the outermost radial point (56) to concentrate the electrical field emissions and provide a consistently strong electrical field strength over time.

No. of Pages : 41 No. of Claims : 29

(12) PATENT APPLICATION PUBLICATION
(19) INDIA
(22) Date of filing of Application :15/11/2012
(21) Application No.9637/CHENP/2012 A
(43) Publication Date : 14/03/2014

(54) Title of the invention : EXTRACTING LOW CONCENTRATIONS OF BACTERIA FROM A SAMPLE

(51) International classification :G01N33/48
(31) Priority Document No :61/326588
(32) Priority Date :21/04/2010
(33) Name of priority country :U.S.A.
(86) International Application No :PCT/US2011/033410
Filing Date :21/04/2011
(87) International Publication No :WO 2011/133759
(61) Patent of Addition to Application Number :NA
Filing Date :NA
(62) Divisional to Application Number :NA
Filing Date :NA

(71)**Name of Applicant :**
1)NANOMR INC.
Address of Applicant :2305 Renard Pl. SE Suite 110 Albuquerque NM 87106 U.S.A.
(72)**Name of Inventor :**
1)ESCH Victor C.
2)DRYGA Sergey A.
3)CLARIZIA Lisa jo Ann

(57) Abstract :
The invention generally relates to conducting an assay on a sample that isolates a bacterium from the sample in which the assay isolates as low as about 1 CFU/ml of bacteria in the sample.

No. of Pages : 27 No. of Claims : 25

(12) PATENT APPLICATION PUBLICATION
(19) INDIA
(22) Date of filing of Application :15/11/2012
(21) Application No.9646/CHENP/2012 A
(43) Publication Date : 14/03/2014

(54) Title of the invention : COHERENT LIGHT RECEIVING DEVICE INTERCHANNEL SKEW DETECTOR DEVICE AND DETECTION METHOD IN COHERENT LIGHT RECEIVING DEVICE

(51) International classification :H04B10/61,H04J11/00,H04L7/00
(31) Priority Document No :2010116878
(32) Priority Date :21/05/2010
(33) Name of priority country :Japan
(86) International Application No :PCT/JP2011/061601
Filing Date :13/05/2011
(87) International Publication No :WO 2011/145712
(61) Patent of Addition to Application Number :NA
Filing Date :NA
(62) Divisional to Application Number :NA
Filing Date :NA

(71)**Name of Applicant :**
1)NEC CORPORATION
Address of Applicant :7 1Shiba 5 chome Minato ku Tokyo 1088001 Japan
(72)**Name of Inventor :**
1)YASUDA Wakako
2)ABE Junichi
3)FUKUCHI Kiyoshi

(57) Abstract :
When interchannel skew occurs in a coherent light receiving device adequate demodulation cannot take place and reception performance deteriorates. Accordingly disclosed is a coherent light receiving device comprising a local light source a 90 degree hybrid circuit an optoelectric converter device an analog digital converter device and a digital signal processing unit. The 90 degree hybrid circuit causes interference in a multiplexed optical signal with a local light from a local light source and separates the multiplexed optical signal into a plurality of signal components outputting a plurality of optical signals. The optoelectric converter device detects the optical signal and outputs a detected electrical signal. The analog digital converter device quantizes the detected electrical signal and outputs a quantized signal. The digital signal processing unit further comprises a skew compensation unit which compensates for the skew between the plurality of signal components and a demodulator unit which demodulates the quantized signal.

No. of Pages : 40 No. of Claims : 10

(12) PATENT APPLICATION PUBLICATION
(19) INDIA
(22) Date of filing of Application :15/11/2012
(21) Application No.9648/CHENP/2012 A
(43) Publication Date : 14/03/2014

(54) Title of the invention : CLEANING COMPOSITION WITH IMPROVED STAIN REMOVAL

(51) International classification :C11D3/22,C11D3/33
(31) Priority Document No :10163222.2
(32) Priority Date :19/05/2010
(33) Name of priority country :EPO
(86) International Application No :PCT/EP2011/058154
Filing Date :19/05/2011
(87) International Publication No :WO 2011/144699
(61) Patent of Addition to Application Number :NA
Filing Date :NA
(62) Divisional to Application Number :NA
Filing Date :NA

(71)**Name of Applicant :**
1)DEQUEST AG
Address of Applicant :Bundesplatz 1 CH 6300 Zug Switzerland
(72)**Name of Inventor :**
1)L‰ONARD Isabelle
2)KOCHOWSKI Valrie
3)BONNECHˆRE DELSTANCHE Geneviˆve
4)HENRY Olivier

(57) Abstract :
The invention relates to a cleaning composition with improved stain removal. The alkaline composition contains a hydrolysable dispersing polymer which is selected from carboxylated fructans and one or more biodegradable aminocarboxylate chelating agents.

No. of Pages : 25 No. of Claims : 12

(12) PATENT APPLICATION PUBLICATION
(19) INDIA
(22) Date of filing of Application :22/10/2012
(21) Application No.9044/CHENP/2012 A
(43) Publication Date : 14/03/2014

(54) Title of the invention : NETWORK SYSTEM COMMUNICATION METHOD AND COMMUNICATION TERMINAL

(51) International classification :G06F13/00,H04M1/00,H04M11/00
(31) Priority Document No :2010077781
(32) Priority Date :30/03/2010
(33) Name of priority country :Japan
(86) International Application No :PCT/JP2011/055379
Filing Date :08/03/2011
(87) International Publication No :WO 2011/122266
(61) Patent of Addition to Application Number :NA
Filing Date :NA
(62) Divisional to Application Number :NA
Filing Date :NA

(71)**Name of Applicant :**
1)SHARP KABUSHIKI KAISHA
Address of Applicant :22 22 Nagaike cho Abeno ku Osaka shi Osaka 5458522 Japan
(72)**Name of Inventor :**
1)TAKASUGI Masahide
2)YAMAMOTO Masaki
3)KAWAMURA Misuzu

(57) Abstract :
Disclosed is a communication terminal (100A) that includes: a touch panel (102); a communication device (101) for communicating with another communication terminal (100B); and a processor (106) for playing back content using the touch panel temporarily stopping the playback of content in response to a first input while transmitting a stop command to the other communication terminal (100B) resuming the playback of content in response to a second input while transmitting a resume command to the other communication terminal temporarily stopping the playback of content in response to a stop command from the other communication terminal and resuming the playback of content in response to a resume command from the other communication terminal.

No. of Pages : 82 No. of Claims : 14

(12) PATENT APPLICATION PUBLICATION
(19) INDIA
(22) Date of filing of Application :05/11/2012
(21) Application No.9404/CHENP/2012 A
(43) Publication Date : 14/03/2014

(54) Title of the invention : FLAME RETARDANT ENCAPSULANT COMPOSITION

(51) International classification :C08L35/00,C08K5/151,C08K5/521
(31) Priority Document No :NA
(32) Priority Date :NA
(33) Name of priority country :NA
(86) International Application No :PCT/CN2010/000652
Filing Date :10/05/2010
(87) International Publication No :WO 2011/140669
(61) Patent of Addition to Application Number :NA
Filing Date :NA
(62) Divisional to Application Number :NA
Filing Date :NA

(71)**Name of Applicant :**
1)3M INNOVATIVE PROPERTIES COMPANY
Address of Applicant :3M Center Post Office Box 33427 Saint Paul Minnesota 55133 3427 U.S.A.
(72)**Name of Inventor :**
1)LIN Haohao
2)PYUN Eumi
3)DOWER William V.
4)GONG Zhiqiang
5)XU Zhiyong

(57) Abstract :
The present invention provides a flame retardant encapsulant composition. A composition includes 40 80 wt. % of an encapsulant comprising 60 to 80 parts by weight of hydrocarbon oil suspended in a cross linked polymer matrix; and a liquid flame retardant. At least a portion of the liquid flame retardant can be present in the form of a dispersed liquid phase suspended in a continuous oil rich phase that swells the cross linked polymer matrix. In some exemplary embodiments the oil rich phase comprises less than 15% of the liquid flame retardant dissolved in the oil rich phase.

No. of Pages : 19 No. of Claims : 14

(12) PATENT APPLICATION PUBLICATION
(19) INDIA
(22) Date of filing of Application :11/09/2012
(21) Application No.7823/CHENP/2012 A
(43) Publication Date : 14/03/2014

(54) Title of the invention : STRUCTURE OF CONNECTION OF CRIMPING TERMINAL TO ELECTRIC WIRE

(51) International classification :H01R4/18,H01R4/62
(31) Priority Document No :2010066856
(32) Priority Date :23/03/2010
(33) Name of priority country :Japan
(86) International Application No :PCT/JP2011/056975
Filing Date :23/03/2011
(87) International Publication No :WO 2011/118628
(61) Patent of Addition to Application Number :NA
Filing Date :NA
(62) Divisional to Application Number :NA
Filing Date :NA

(71)**Name of Applicant :**
1)YAZAKI CORPORATION
Address of Applicant :4 28 Mita 1 chome Minato ku Tokyo 1088333 Japan
(72)**Name of Inventor :**
1)SATO Kei

(57) Abstract :
Provided is an electric wire connection structure of a crimping terminal with which water infiltration into the inside of a cap can be prevented without using a filling material and therefore control items for the filling material are reduced when actually using the structure and the improvement of the utility can thereby be achieved. The crimping terminal (10) is used in which an electric wire connection portion (12) is formed in a substantial U shape when seen in a cross sectional view the U shape having bottom plate portions (21 23) and a pair of electric wire crimping pieces (22 24). A metal cap (30) has a cylindrical wall surrounding one end of which in the longitudinal direction is closed and the other end of which in the longitudinal direction is opened and is fitted to a conductor (Wa) exposed by removing an insulating coating portion at a terminal of an electric wire (W). The opening end of the cap (30) is inserted into the space between the conductor (Wa) of the electric wire (W) and an insulating coating (Wb) and is overlapped with an end of the insulating coating (Wb). One of the electric wire crimping pieces (24) is then crimped against the overlapped portion (lap portion) (35).

No. of Pages : 28 No. of Claims : 4

(12) PATENT APPLICATION PUBLICATION
(19) INDIA
(22) Date of filing of Application :24/09/2012
(21) Application No.8187/CHENP/2012 A
(43) Publication Date : 14/03/2014

(54) Title of the invention : EXTRUSION DIE ELEMENT EXTRUSION DIE AND METHOD FOR MAKING MULTIPLE STRIPE EXTRUDATE

(51) International classification :B29C47/06,B29C47/14,B29C33/30
(31) Priority Document No :61/317474
(32) Priority Date :25/03/2010
(33) Name of priority country :U.S.A.
(86) International Application No :PCT/US2011/027542
Filing Date :08/03/2011
(87) International Publication No :WO 2011/119323
(61) Patent of Addition to Application Number :NA
Filing Date :NA
(62) Divisional to Application Number :NA
Filing Date :NA

(71)**Name of Applicant :**
1)3M INNOVATIVE PROPERTIES COMPANY
Address of Applicant :3M Center Post Office Box 33427 Saint Paul Minnesota 55133 3427 U.S.A.
(72)**Name of Inventor :**
1)AUSEN Ronald W.
2)KOPECKY William J.

(57) Abstract :
Extrusion die (30) comprising a plurality of shims (40a 40b 40c) positioned adjacent to one another the shims (40a 40b 40c) together defining a first cavity a second cavity and a die slot and methods of using the same. A variety of composite layers can be made from various dies described herein.

No. of Pages : 68 No. of Claims : 8

(12) PATENT APPLICATION PUBLICATION
(19) INDIA
(22) Date of filing of Application :24/09/2012
(21) Application No.8189/CHENP/2012 A
(43) Publication Date : 14/03/2014

(54) Title of the invention : PYRETHRINOID TYPE ESTERS AS PESTICIDES

(51) International classification :C07C255/31,A01N53/00,C07C323/16
(31) Priority Document No :2010081658
(32) Priority Date :31/03/2010
(33) Name of priority country :Japan
(86) International Application No :PCT/JP2011/057501
Filing Date :18/03/2011
(87) International Publication No :WO 2011/122507
(61) Patent of Addition to Application Number :NA
Filing Date :NA
(62) Divisional to Application Number :NA
Filing Date :NA

(71)**Name of Applicant :**
1)SUMITOMO CHEMICAL COMPANY LIMITED
Address of Applicant :27 1 Shinkawa 2 chome Chuo ku Tokyo 1048260 Japan
(72)**Name of Inventor :**
1)MATSUO Noritada
2)MORI Tatsuya

(57) Abstract :
An ester compound represented by formula (1): wherein R represents hydrogen fluorine C1 C4 alkyl C1 C4 alkoxy C1 C4 alkoxymethyl or C1 C4 alkylthiomethyl; R represents hydrogen or methyl R represents hydrogen or C1 C4 alkyl and R represents hydrogen or C1 C4 alkyl; has an excellent pest control effect and is therefore useful as an active ingredient of a pest control agent.

No. of Pages : 100 No. of Claims : 31

(12) PATENT APPLICATION PUBLICATION
(19) INDIA
(22) Date of filing of Application :24/09/2012
(21) Application No.8190/CHENP/2012 A
(43) Publication Date : 14/03/2014

(54) Title of the invention : NEW HIGH VISCOSITY CARBOXYMETHYL CELLULOSE AND METHOD OF PREPARATION

(51) International classification :C08B11/12,C08L1/28
(31) Priority Document No :NA
(32) Priority Date :NA
(33) Name of priority country :NA
(86) International Application No :PCT/EP2010/001992
Filing Date :30/03/2010
(87) International Publication No :WO 2011/120533
(61) Patent of Addition to Application Number :NA
Filing Date :NA
(62) Divisional to Application Number :NA
Filing Date :NA

(71)**Name of Applicant :**
1)DOW GLOBAL TECHNOLOGIES LLC
Address of Applicant :2040 Dow Center Midland MI 48674 U.S.A.
(72)**Name of Inventor :**
1)ADDEN Roland
2)BRACKHAGEN Meinolf
3)MLLER Volkhard
4)PETERMANN Oliver

(57) Abstract :
The invention is directed to a process of preparing carboxymethyl cellulose comprising the steps of (a) reacting non regenerated cellulose with an alkalization agent in the presence of water and isopropyl alcohol and (b) reacting the alkalized cellulose with monohaloacetic acid or a salt thereof wherein 1.0 to 1.6 mol of the alkalization agent and 15 to 30 mol of water are used in step (a) and 0.5 to 0.8 mol of monohaloacetic acid or a salt thereof are used in step (b) each based on 1 mol of anhydroglucose unit of the cellulose. The invention also relates to carboxymethyl cellulose prepared by that process.

No. of Pages : 18 No. of Claims : 15

(12) PATENT APPLICATION PUBLICATION
(19) INDIA
(22) Date of filing of Application :05/11/2012
(21) Application No.9413/CHENP/2012 A
(43) Publication Date : 14/03/2014

(54) Title of the invention : BASE STATION APPARATUS MOBILE TERMINAL APPARATUS AND COMMUNICATION CONTROL METHOD

(51) International classification :H04W16/16,H04W16/32,H04W72/12
(31) Priority Document No :2010-105941
(32) Priority Date :30/04/2010
(33) Name of priority country :Japan
(86) International Application No :PCT/JP2011/060379
Filing Date :28/04/2011
(87) International Publication No :WO 2011/136334 A1
(61) Patent of Addition to Application Number :NA
Filing Date :NA
(62) Divisional to Application Number :NA
Filing Date :NA

(71)**Name of Applicant :**
1)NTT DOCOMO INC.
Address of Applicant :11 1 Nagatacho 2 chome Chiyoda ku Tokyo 1006150 Japan
(72)**Name of Inventor :**
1)ABE Tetsushi
2)MIKI Nobuhiko
3)NAGATA Satoshi
4)OKUBO Naoto
5)JATURONG Sangiamwong

(57) Abstract :
This invention is directed to provision of a base station apparatus a mobile terminal apparatus and a communication control method whereby a control that is applicable to interferences in a heterogeneous network can be performed and the next generation mobile communication system can be supported. An offset is added to the reception power of a signal transmitted from a base station apparatus (B1) of a picocell (C1) to a mobile terminal apparatus (UE) so that the reception power to which the offset has been added becomes greater than the reception power of a signal transmitted from a base station apparatus (B2) of a macrocell (C2) to the mobile terminal apparatus (UE) with the result that it becomes possible to determine from among mobile terminal apparatuses (UE) belonging to the picocell (C1) the mobile terminal apparatus (UE) for which the reception power of the signal transmitted from the base station apparatus (B2) to the mobile terminal apparatus (UE) is greater than the reception power of any other signal transmitted to the mobile terminal apparatus (UE). This determined mobile terminal apparatus is scheduled in accordance with a blank resource established in a downstream radio frame of the base station apparatus (B2).

No. of Pages : 49 No. of Claims : 10

(12) PATENT APPLICATION PUBLICATION
(19) INDIA
(22) Date of filing of Application :10/10/2012
(21) Application No.8687/CHENP/2012 A
(43) Publication Date : 14/03/2014

(54) Title of the invention : SANITARY INSTALLATION

(51) International classification :E04H 1/12
(31) Priority Document No :10 2010 019 916.8
(32) Priority Date :07/05/2010
(33) Name of priority country :Germany
(86) International Application No :PCT/EP2011/002009
Filing Date :20/04/2011
(87) International Publication No :WO 2011/137979 A2
(61) Patent of Addition to Application Number :NA
Filing Date :NA
(62) Divisional to Application Number :NA
Filing Date :NA

(71)**Name of Applicant :**
1)DORMA GMBH + CO. KG
Address of Applicant :DORMA Platz 1 58256 Ennepetal Germany
(72)**Name of Inventor :**
1)GLANZ Michael
2)BRIESECK Bernd
3)LANGE Siegfried

(57) Abstract :
The invention relates to a sanitary installation (1) comprising at least one partition (10) such as a wall or a door said partition (10) forming at least a part of a WC cubicle. According to the invention the partition (10) is designed to be self illuminating and emits light (11) over at least one partition surface (12).

No. of Pages : 16 No. of Claims : 16

(12) PATENT APPLICATION PUBLICATION
(19) INDIA
(22) Date of filing of Application :19/11/2012
(21) Application No.9742/CHENP/2012 A
(43) Publication Date : 14/03/2014

(54) Title of the invention : METHOD FOR PRODUCING POLYURETHANE RIGID FOAMS

(51) International classification :C08G18/40,C08G18/42,C08G18/48
(31) Priority Document No :10160927.9
(32) Priority Date :23/04/2010
(33) Name of priority country:EPO
(86) International Application No :PCT/EP2011/056252
Filing Date :19/04/2011
(87) International Publication No :WO 2011/131682
(61) Patent of Addition to Application Number :NA
Filing Date :NA
(62) Divisional to Application Number :NA
Filing Date :NA

(71)**Name of Applicant :**
1)BASF SE
Address of Applicant :67056 Ludwigshafen Germany
(72)**Name of Inventor :**
1)K–STERS Michael
2)KAMPF Gunnar
3)FABISIAK Roland
4)JACOBMEIER Olaf

(57) Abstract :
The invention relates to a method for producing polyurethane rigid foams by reacting a) polyisocyanates with b) compounds having at least two hydrogen atoms that are reactive with isocyanate groups in the presence of c) expanding agents characterized in that the compounds having at least two hydrogen atoms that are reactive with isocyanate groups contain b) at least one aromatic polyester alcohol bi) at least one polyester alcohol bii) having a functionality of 4 to 8 and a hydroxyl number ranging between 300 and 600 mgKOH/gh.

No. of Pages : 20 No. of Claims : 16

(12) PATENT APPLICATION PUBLICATION
(19) INDIA
(22) Date of filing of Application :13/09/2012
(21) Application No.7929/CHENP/2012 A
(43) Publication Date : 14/03/2014

(54) Title of the invention : FORMING METHOD FOR VARIABLE RESISTANCE NON VOLATILE MEMORY ELEMENT AND VARIABLE RESISTANCE NON VOLATILE MEMORY DEVICE

(51) International classification :G11C13/00,H01L27/10,H01L45/00
(31) Priority Document No :2010-079478
(32) Priority Date :30/03/2010
(33) Name of priority country :Japan
(86) International Application No :PCT/JP2011/001809
Filing Date :28/03/2011
(87) International Publication No :WO 2011/121970 A1
(61) Patent of Addition to Application Number :NA
Filing Date :NA
(62) Divisional to Application Number :NA
Filing Date :NA

(71)**Name of Applicant :**
1)PANASONIC CORPORATION
Address of Applicant :1006 Oaza Kadoma Kadoma shi Osaka 5718501 Japan
(72)**Name of Inventor :**
1)KAWAI Ken
2)SHIMAKAWA Kazuhiko
3)KATAYAMA Koji

(57) Abstract :
Provided is a forming method of a variable resistance nonvolatile memory element capable of lowering a forming voltage than conventional one and of preventing variations of the forming voltage depending on variable resistance elements. The forming method is for initializing a variable resistance element (100), including a step (S24) of determining whether or not a current flowing in a 1T1R memory cell is greater than a reference current; a step (S22) of applying a forming positive voltage pulse having a pulse width (Tp(n)) is gradually increased when it is determined that the current is not greater than the reference current (No at S24); and a step (S23) of applying a negative voltage pulse having a pulse width Tn equal to or shorter than a pulse width Tp(n). The step (S24), the application step (S22), and the application step (23) are repeated until the forming becomes successful.

No. of Pages : 122 No. of Claims : 25

(12) PATENT APPLICATION PUBLICATION
(19) INDIA
(22) Date of filing of Application :26/10/2012
(21) Application No.9152/CHENP/2012 A
(43) Publication Date : 14/03/2014

(54) Title of the invention : IMIDAZO[1 2 A]PYRIDINE DERIVATIVE

(51) International classification :C07D471/04,A61K31/437,A61K31/438
(31) Priority Document No :2010101557
(32) Priority Date :27/04/2010
(33) Name of priority country :Japan
(86) International Application No :PCT/JP2011/060098
Filing Date :26/04/2011
(87) International Publication No :WO 2011/136192
(61) Patent of Addition to Application Number :NA
Filing Date :NA
(62) Divisional to Application Number :NA
Filing Date :NA

(71)**Name of Applicant :**
1)Astellas Pharma Inc.
Address of Applicant :3 11 Nihonbashi Honcho 2 chome Chuo ku Tokyo 1038411 Japan
(72)**Name of Inventor :**
1)SAMIZU Kiyohiro
2)MASUDA Naoyuki
3)IIKUBO Kazuhiko
4)KOGANEMARU Yohei
5)KAWANO Noriyuki
6)OHMORI Junya
7)MITANI Yasuyuki
8)NI Keni

(57) Abstract :
Disclosed is a compound useful as an active ingredient for medicines having PDE4B inhibiting activity in particular therapeutic or preventive medicinal compositions for schizophrenia Alzheimer s disease dementia depression and the like. Specifically the present inventors examined compounds having PDE4B inhibiting activity and found that a tricyclic or tetracyclic imidazo[1 2 a]pyridine derivative or salts thereof had superior PDE4B inhibiting activity. This imidazo[1 2 a]pyridine derivative can be used in therapeutic and preventative agents for schizophrenia Alzheimer s disease dementia depression and the like.

No. of Pages : 90 No. of Claims : 11

(12) PATENT APPLICATION PUBLICATION
(19) INDIA
(22) Date of filing of Application :04/10/2012
(21) Application No.8491/CHENP/2012 A
(43) Publication Date : 14/03/2014

(54) Title of the invention : FUSE UNIT

(51) International classification :H01H85/044,H01R4/34,H01R13/04
(31) Priority Document No :2010087700
(32) Priority Date :06/04/2010
(33) Name of priority country :Japan
(86) International Application No :PCT/JP2011/059125
Filing Date :06/04/2011
(87) International Publication No :WO 2011/126140
(61) Patent of Addition to Application Number :NA
Filing Date :NA
(62) Divisional to Application Number :NA
Filing Date :NA

(71)**Name of Applicant :**
1)YAZAKI CORPORATION
Address of Applicant :4 28 Mita 1 chome Minato ku Tokyo 1088333 Japan
(72)**Name of Inventor :**
1)MATSUMURA Norio
2)KIBUSHI Hidenori

(57) Abstract :
A fuse unit (1A) includes a first connection part (3) to which power is fed and a second connection part (10 20) to be connected with a mating terminal. The second connection part includes a bolt connection portion (11 21) to which the mating terminal is connected by a bolt and a connecter connection portion (12 22) to which the mating terminal is connected by a connector.

No. of Pages : 25 No. of Claims : 5

(12) PATENT APPLICATION PUBLICATION
(19) INDIA
(22) Date of filing of Application :05/11/2012
(21) Application No.9392/CHENP/2012 A
(43) Publication Date : 14/03/2014

(54) Title of the invention : CURABLE COMPOSITION PRESSURE SENSITIVE ADHESIVE METHOD OF MAKING THE SAME AND ADHESIVE ARTICLES

(51) International classification :C08L23/16,C09J123/16,C09J7/02
(31) Priority Document No :61/333560
(32) Priority Date :11/05/2010
(33) Name of priority country :U.S.A.
(86) International Application No :PCT/US2011/034049
Filing Date :27/04/2011
(87) International Publication No :WO 2011/142964
(61) Patent of Addition to Application Number :NA
Filing Date :NA
(62) Divisional to Application Number :NA
Filing Date :NA

(71)**Name of Applicant :**
1)3M INNOVATIVE PROPERTIES COMPANY
Address of Applicant :3M Center Post Office Box 33427 Saint Paul Minnesota 55133 3427 U.S.A.
(72)**Name of Inventor :**
1)CHEN Zhong
2)MA Jingjing

(57) Abstract :
A curable composition includes components : a) at least one ethylene propylene (nonconjugated diene) terpolymer; b) at least one ethylene propylene copolymer; c) at least one bis(halomethyl)triazine crosslinker; and d) at least one tackifier. A weight ratio of component a) to component b) is in a range of from 15:85 to 85:15. A pressure sensitive adhesive includes an at least partially crosslinked reaction product of the curable composition. Adhesive articles including the pressure sensitive adhesive are disclosed.

No. of Pages : 36 No. of Claims : 17

(12) PATENT APPLICATION PUBLICATION
(19) INDIA
(22) Date of filing of Application :05/11/2012
(21) Application No.9394/CHENP/2012 A
(43) Publication Date : 14/03/2014

(54) Title of the invention : SENSORS

(51) International classification :H03H9/02
(31) Priority Document No :1005875.8
(32) Priority Date :08/04/2010
(33) Name of priority country :U.K.
(86) International Application No :PCT/EP2011/055285
Filing Date :05/04/2011
(87) International Publication No :WO 2011/124576
(61) Patent of Addition to Application Number :NA
Filing Date :NA
(62) Divisional to Application Number :NA
Filing Date :NA

(71)**Name of Applicant :**
1)SILICON SENSING SYSTEMS LIMITED
Address of Applicant :Clittaford Road Southway Plymouth Devon PL6 6DE U.K.
(72)**Name of Inventor :**
1)DURSTON Michael
2)BEASLEY David
3)TOWNSEND Kevin

(57) Abstract :
An inertial sensor is described in which a resonant element is driven by control electronics into resonance. The control electronics includes an oscillator. A circuit is provided for matching the frequency of the oscillator with the frequency of the output of the resonant element such that the time to operation from start up of the sensor is minimised and the requirement of frequency matching a given sensor to the control electronics is removed.

No. of Pages : 8 No. of Claims : 8

(12) PATENT APPLICATION PUBLICATION
(19) INDIA
(22) Date of filing of Application :12/11/2012
(21) Application No.9579/CHENP/2012 A
(43) Publication Date : 14/03/2014

(54) Title of the invention : RETAINER FOR TAPERED ROLLER BEARING METHOD FOR MANUFACTURING RETAINER AND TAPERED ROLLER BEARING

(51) International classification	:F16C33/46,F16C19/36,F16C33/58
(31) Priority Document No	:2010-093977
(32) Priority Date	:15/04/2010
(33) Name of priority country	:Japan
(86) International Application No	:PCT/JP2011/056895
Filing Date	:23/03/2011
(87) International Publication No	:WO 2011/129178 A1
(61) Patent of Addition to Application Number	:NA
Filing Date	:NA
(62) Divisional to Application Number	:NA
Filing Date	:NA

(71)**Name of Applicant :**
1)NTN CORPORATION
Address of Applicant :3 17 Kyomachibori 1 chome Nishi ku Osaka shi Osaka 5500003 Japan
(72)**Name of Inventor :**
1)UENO Takashi

(57) Abstract :
Provided are a retainer for a tapered roller bearing configured so that the retainer can be adapted to various designs without a restriction on the design of the dimension of engagement sections a method for manufacturing the retainer and a tapered roller bearing using the retainer. A retainer for a tapered roller bearing consists of a resin and is provided with a small diameter ring section (24b) a large diameter ring section (24a) and column sections (24c) which are disposed between the small diameter and large diameter ring sections (24b 24a). Tapered rollers (23) are held in pockets (24d) located between the column sections (24c). The retainer has provided on the large diameter side thereof engagement sections (36) which engage with the large diameter side of the inner ring (21). The outer diameter of the small diameter ring section of the pockets (24d) (the diameter of the small diameter ends of the pockets (24d)) is set to be greater than the inner diameter of the engagement sections (36). The pockets (24d) are formed using a slide core (53) which in a drawing process slides so as to tilt relative to the axis of the retainer toward the axis.

No. of Pages : 53 No. of Claims : 13

(12) PATENT APPLICATION PUBLICATION
(19) INDIA
(22) Date of filing of Application :19/10/2012
(21) Application No.8999/CHENP/2012 A
(43) Publication Date : 14/03/2014

(54) Title of the invention : WHITE CHOCOLATE IMPREGNATED FOOD AND METHOD FOR PRODUCING SAME

(51) International classification :A23G1/00,A21D13/08,A23G1/30
(31) Priority Document No :2010080307
(32) Priority Date :31/03/2010
(33) Name of priority country :Japan
(86) International Application No :PCT/JP2011/056404
Filing Date :17/03/2011
(87) International Publication No :WO 2011/125451
(61) Patent of Addition to Application Number :NA
Filing Date :NA
(62) Divisional to Application Number :NA
Filing Date :NA

(71)**Name of Applicant :**
1)Meiji Co. Ltd.
Address of Applicant :2 10 Shinsuna 1 chome Koto ku Tokyo 1368908 Japan
(72)**Name of Inventor :**
1)HAREYAMA Takeshi
2)KUROSU Mitsuharu
3)TAKAHARA Mitsunori

(57) Abstract :
Disclosed is a white chocolate impregnated food which is obtained by impregnating a porous food with white chocolate dough and which is characterized in that the white chocolate dough contains non fat milk solids in an amount of 15% by weight or more and the particles of the white chocolate dough have a median diameter of 6 μm or less. White chocolate dough containing non fat milk solids in an amount of 15% by weight or more is subjected to primary pulverization so as to obtain primary white chocolate dough and the primary white chocolate dough is subjected to secondary pulverization by means of a wet grinding mill so as to obtain secondary white chocolate dough that is composed of particles having a median diameter of 6 μm or less. Then a porous food is impregnated with the secondary white chocolate dough thereby obtaining a white chocolate impregnated food wherein the inside of the porous food is sufficiently impregnated with the white chocolate dough.

No. of Pages : 31 No. of Claims : 15

(12) PATENT APPLICATION PUBLICATION
(19) INDIA
(22) Date of filing of Application :15/11/2012
(21) Application No.9661/CHENP/2012 A
(43) Publication Date : 14/03/2014

(54) Title of the invention : VERTICAL MILL

(51) International classification :B02C15/04
(31) Priority Document No :2010115484
(32) Priority Date :19/05/2010
(33) Name of priority country :Japan
(86) International Application No :PCT/JP2011/061079
Filing Date :13/05/2011
(87) International Publication No :WO 2011/145527
(61) Patent of Addition to Application Number :NA
Filing Date :NA
(62) Divisional to Application Number :NA
Filing Date :NA

(71)**Name of Applicant :**
1)MITSUBISHI HEAVY INDUSTRIES LTD.
Address of Applicant :16 5 Konan 2 chome Minato ku Tokyo 1088215 Japan
(72)**Name of Inventor :**
1)YAMAGUCHI Yoshiki
2)ARIMA Kenichi
3)IIDA Yutaka
4)UEMATSU Yoshishige

(57) Abstract :
In the disclosed vertical mill grinding efficiency is improved because solids such as biomass are ground efficiently. In the disclosed vertical mill a grinding table (13) is supported so as to be rotated by being driven on a rotation shaft axis disposed vertically inside a housing (11) a grinding roller (18) capable of rotation coupled with the rotation of the grinding table (13) is arranged above and opposite to the grinding table (13) and a roller oscillating mechanism (19) is provided capable of oscillating the grinding roller (18) along the surface of the grinding table (13) and in a direction different from the rotation direction thereof.

No. of Pages : 27 No. of Claims : 5

(12) PATENT APPLICATION PUBLICATION
(19) INDIA
(22) Date of filing of Application :06/09/2012
(21) Application No.7716/CHENP/2012 A
(43) Publication Date : 14/03/2014

(54) Title of the invention : DRAWING FRAME FOR A SPINNING MACHINE

(51) International classification :D01H5/56,D01H5/82
(31) Priority Document No :180/10
(32) Priority Date :12/02/2010
(33) Name of priority country :Switzerland
(86) International Application No :PCT/CH2011/000025
Filing Date :11/02/2011
(87) International Publication No :WO 2011/097746 A4
(61) Patent of Addition to Application Number :NA
Filing Date :NA
(62) Divisional to Application Number :NA
Filing Date :NA

(71)**Name of Applicant :**
1)MASCHINENFABRIK RIETER AG
Address of Applicant :Klosterstrasse 20 CH 8406 Winterthur Switzerland
(72)**Name of Inventor :**
1)MALINA Ludek

(57) Abstract :
The invention relates to a spinning machine comprising a drawing frame having a drawing frame unit (35 65 95) provided with a first pair of rollers consisting of a first lower roller (22 42 72) and a first upper roller (21 41 71). The drawing frame unit (35 65 95) is embodied as a structural component that is detachably fixed to the spinning machine by means of a fixing device (11 59). The drawing frame unit (35 65 95) is preferably designed for one spinning station or as a twin drawing unit for two adjacent spinning stations. The unit can comprise other rollers that together with the first pair of rollers form a drawing zone of the drawing frame.

No. of Pages : 52 No. of Claims : 18

(12) PATENT APPLICATION PUBLICATION
(19) INDIA
(22) Date of filing of Application :06/09/2012
(21) Application No.7718/CHENP/2012 A
(43) Publication Date : 14/03/2014

(54) Title of the invention : METHOD FOR DETECTING A DOWNLINK CONTROL STRUCTURE FOR CARRIER AGGREGATION

(51) International classification :H04W 72/04
(31) Priority Document No :2009903831
(32) Priority Date :14/08/2009
(33) Name of priority country :Australia
(86) International Application No :PCT/JP2010/063444
Filing Date :02/08/2010
(87) International Publication No :WO/2011/019009
(61) Patent of Addition to Application Number :NA
Filing Date :NA
(62) Divisional to Application Number :1373/CHENP/2012
Filed on :02/08/2010

(71)**Name of Applicant :**
1)NEC CORPORATION
Address of Applicant :7-1, SHIBA 5-CHOME, MINATO-KU, TOKYO 108-8001 Japan
(72)**Name of Inventor :**
1)NG, BOON LOONG

(57) Abstract :
This invention relates with a method for detecting a downlink control structure for carrier aggregation in communication network in which data transmission is scheduled by a physical downlink control channel (PDCCH). An UE receives higher layer signaling enabling carrier aggregation for the UE. The UE reads the PDCCHs of component carriers -(CCs), wherein the downlink control information (DCI) in the PDCCHs of each CC is read according to one of a plurality of predefined formats derived from the higher layer signaling.

No. of Pages : 19 No. of Claims : 15

(12) PATENT APPLICATION PUBLICATION
(19) INDIA
(22) Date of filing of Application :16/11/2012
(21) Application No.9695/CHENP/2012 A
(43) Publication Date : 14/03/2014

(54) Title of the invention : COMPOSITION FOR TREATING CHRONIC HEPATITIS B CONTAINING CLEVUDINE AND ADEFOVIR DIPIVOXIL

(51) International classification	:A61K31/501,A61K31/675,A61P1/16
(31) Priority Document No	:1020100046543
(32) Priority Date	:18/05/2010
(33) Name of priority country	:Republic of Korea
(86) International Application No	:PCT/KR2011/002747
Filing Date	:18/04/2011
(87) International Publication No	:WO 2011/145808
(61) Patent of Addition to Application Number	:NA
Filing Date	:NA
(62) Divisional to Application Number	:NA
Filing Date	:NA

(71)**Name of Applicant :**
1)BUKWANG PHARM CO. LTD.
Address of Applicant :398 1 Daebang dong Dongjak gu Seoul 156 811 Republic of Korea
(72)**Name of Inventor :**
1)LEE Sung Koo
2)LEE Young Choon

(57) Abstract :
The present invention relates to a composition for treating chronic hepatitis B containing clevudine and adefovir dipivoxil. The combined formulation of the present invention maximizes the effect for treating diseases caused by infection of hepatitis B virus and shows a mutual inhibitory activity against a resistant virus compared with a single component formulation.

No. of Pages : 21 No. of Claims : 9

(12) PATENT APPLICATION PUBLICATION
(19) INDIA
(22) Date of filing of Application :07/11/2012
(21) Application No.9462/CHENP/2012 A
(43) Publication Date : 14/03/2014

(54) Title of the invention : MICROORGANISMS AND METHODS FOR THE PRODUCTION OF ETHYLENE GLYCOL

(51) International classification :C12P7/04,C12N1/21
(31) Priority Document No :61/323650
(32) Priority Date :13/04/2010
(33) Name of priority country :U.S.A.
(86) International Application No :PCT/US2011/032272
Filing Date :13/04/2011
(87) International Publication No :WO 2011/130378
(61) Patent of Addition to Application Number :NA
Filing Date :NA
(62) Divisional to Application Number :NA
Filing Date :NA

(71)**Name of Applicant :**
1)GENOMATICA INC.
Address of Applicant :10520 Waterridge Circle San Diego CA 92121 U.S.A.
(72)**Name of Inventor :**
1)OSTERHOUT Robin E.
2)PHARKYA Prit
3)BURGARD Anthony P.

(57) Abstract :
The invention provides non naturally occurring microbial organisms having an ethylene glycol pathway. The invention additionally provides methods of using such organisms to produce ethylene glycol.

No. of Pages : 79 No. of Claims : 35

(12) PATENT APPLICATION PUBLICATION
(19) INDIA
(22) Date of filing of Application :07/11/2012
(21) Application No.9466/CHENP/2012 A
(43) Publication Date : 14/03/2014

(54) Title of the invention : METHOD OF SHAPING GLASS SHEETS

(51) International classification :C03B23/033,C03B35/16
(31) Priority Document No :61/333905
(32) Priority Date :12/05/2010
(33) Name of priority country :U.S.A.
(86) International Application No :PCT/US2011/000828
Filing Date :11/05/2011
(87) International Publication No :WO 2011/142814
(61) Patent of Addition to Application Number :NA
Filing Date :NA
(62) Divisional to Application Number :NA
Filing Date :NA

(71)**Name of Applicant :**
1)PILKINGTON GROUP LIMITED
Address of Applicant :Prescot Road St. Helens Merseyside WA10 3TT U.K.
(72)**Name of Inventor :**
1)BOISSELLE Robert J.
2)SERRANO Efrain
3)TOMIK John

(57) Abstract :
A method is provided for shaping a glass sheet in more than one dimension and within the one or more dimensions forming non uniform shapes between for example the leading edge and the trailing edge of the same glass sheet. Such shaping is achieved by the selective location in first and second shaping zones of shaping rolls having first and second shaping configurations and by varying the speed of the glass sheet as it moves through the shaping zones thus varying the length of time that selected portions of the glass sheet are in contact with certain shaping rolls.

No. of Pages : 17 No. of Claims : 12

(12) PATENT APPLICATION PUBLICATION
(19) INDIA
(22) Date of filing of Application :07/11/2012
(21) Application No.9467/CHENP/2012 A
(43) Publication Date : 14/03/2014

(54) Title of the invention : SWEETENER COMPOSITIONS WITH REDUCED BITTER OFF TASTE AND METHODS OF PREPARING

(51) International classification	:A23C9/152,A23G3/00,A23C9/154
(31) Priority Document No	:61/395408
(32) Priority Date	:12/05/2010
(33) Name of priority country	:U.S.A.
(86) International Application No	:PCT/US2011/036307
Filing Date	:12/05/2011
(87) International Publication No	:WO 2011/143465
(61) Patent of Addition to Application Number	:NA
Filing Date	:NA
(62) Divisional to Application Number	:NA
Filing Date	:NA

(71)**Name of Applicant :**
1)CARGILL INCORPORATED
Address of Applicant :Mail Stop 24 15407 McGinty Road West Wayzata Minnesota 55391 U.S.A.
(72)**Name of Inventor :**
1)SIPS Nils Cornelis Adrianus Petrus
2)VERCAUTEREN Ronny Leontina Marcel

(57) Abstract :
This disclosure pertains to a sweetener composition having reduced bitter off taste. Also disclosed are methods of making a sweetener composition of the present invention and food products using the sweetener composition.

No. of Pages : 30 No. of Claims : 17

(12) PATENT APPLICATION PUBLICATION
(19) INDIA
(22) Date of filing of Application :15/11/2012
(21) Application No.9650/CHENP/2012 A
(43) Publication Date : 14/03/2014

(54) Title of the invention : TENSIONER WITH SPRING DAMPER

(51) International classification :F16H7/12,F02B67/06,F16F13/02
(31) Priority Document No :12/763507
(32) Priority Date :20/04/2010
(33) Name of priority country :U.S.A.
(86) International Application No :PCT/CA2011/000445
Filing Date :18/04/2011
(87) International Publication No :WO 2011/130833
(61) Patent of Addition to Application Number :NA
Filing Date :NA
(62) Divisional to Application Number :NA
Filing Date :NA

(71)**Name of Applicant :**
1)LITENS AUTOMOTIVE PARTNERSHIP
Address of Applicant :730 Rowntree Dairy Road Woodbridge Ontario L4L 5T9 Canada
(72)**Name of Inventor :**
1)FRANKOWSKI Marek
2)TANJALA Liviu
3)STEPNIAK Jacek
4)SCHIMPL Frank

(57) Abstract :
A tensioner having a closing type torsion spring that is employed to bias a pivot arm about a pivot shaft. The tensioner includes a damper that continuously contacts an inside surface of the torsion spring to dampen torsional vibration transmitted through the torsion spring.

No. of Pages : 33 No. of Claims : 22

(12) PATENT APPLICATION PUBLICATION
(19) INDIA
(22) Date of filing of Application :15/11/2012
(21) Application No.9655/CHENP/2012 A
(43) Publication Date : 14/03/2014

(54) Title of the invention : METHOD FOR PRODUCING GLUCOSIDES

(51) International classification :C07H15/04,C07H1/00
(31) Priority Document No :2010-113066
(32) Priority Date :17/05/2010
(33) Name of priority country :Japan
(86) International Application No :PCT/JP2011/061049
Filing Date :13/05/2011
(87) International Publication No :WO 2011/145519 A1
(61) Patent of Addition to Application Number :NA
Filing Date :NA
(62) Divisional to Application Number :NA
Filing Date :NA

(71)**Name of Applicant :**
1)Nagasaki University
Address of Applicant :1 14 Bunkyo machi Nagasaki shi Nagasaki 8528521 Japan
2)JX Nippon Oil & Energy Corporation
(72)**Name of Inventor :**
1)MOTOKUCHO Suguru
2)INOUE Toshio

(57) Abstract :
Disclosed are methods for producing a glucoside directly from glucose or a sugar chain comprising glucose as a structural unit. Specifically disclosed are: a method which comprises reacting glucose or a sugar chain comprising glucose as a structural unit with a compound represented by R OH in the presence of supercritical carbon dioxide or subcritical carbon dioxide to give a glucoside; and a method which comprises dissolving or suspending glucose or a sugar chain comprising glucose as a structural unit in an organic solvent containing a compound represented by R OH and then reacting the same with the compound represented by R OH in the presence of supercritical carbon dioxide or subcritical carbon dioxide to give a glucoside.

No. of Pages : 35 No. of Claims : 6

(12) PATENT APPLICATION PUBLICATION
(19) INDIA
(22) Date of filing of Application :15/11/2012
(21) Application No.9659/CHENP/2012 A
(43) Publication Date : 14/03/2014

(54) Title of the invention : CHARGING SYSTEM FOR ELECTRIC VEHICLES

(51) International classification :H02J7/00,H02J7/02,B60L11/18
(31) Priority Document No :2004746
(32) Priority Date :19/05/2010
(33) Name of priority country :Netherlands
(86) International Application No :PCT/NL2011/050341
Filing Date :18/05/2011
(87) International Publication No :WO 2011/145939
(61) Patent of Addition to Application Number :NA
Filing Date :NA
(62) Divisional to Application Number :NA
Filing Date :NA

(71)**Name of Applicant :**
1)ABB B.V.
Address of Applicant :George Hintzenweg 81 NL 3068 AX Rotterdam Netherlands
(72)**Name of Inventor :**
1)BOUMAN Crijn

(57) Abstract :
The present invention relates to a charging system for electric vehicles comprising at least one charging port with an interface for power exchange with at least one electric vehicle at least one power converter for converting power from a power source such as a power grid to a suitable format for charging the vehicle wherein the power converter is at a remote location from the charging port such as a separate room and/or a separate building.

No. of Pages : 26 No. of Claims : 12

(12) PATENT APPLICATION PUBLICATION
(19) INDIA
(22) Date of filing of Application :10/09/2012
(21) Application No.7814/CHENP/2012 A
(43) Publication Date : 14/03/2014

(54) Title of the invention : A COVERING ASSEMBLY FOR A SEAT AND SEAT ADAPTED FOR PROTECTING A USER

(51) International classification :B60R21/207
(31) Priority Document No :VR2010A000042
(32) Priority Date :09/03/2010
(33) Name of priority country :Italy
(86) International Application No :PCT/IB2011/050906
Filing Date :03/03/2011
(87) International Publication No :WO 2011/110982
(61) Patent of Addition to Application Number :NA
Filing Date :NA
(62) Divisional to Application Number :NA
Filing Date :NA

(71)**Name of Applicant :**
1)DAINESE S.P.A.
Address of Applicant :Via dellArtigianato 35 I 36060 Molvena (Vicenza) Italy
(72)**Name of Inventor :**
1)DAINESE Lino
2)RONCO Luigi

(57) Abstract :
The present disclosure refers to a covering assembly (100 1001 3100) for a seat (1 101 201 3001) including a cover (4 104 3004) adapted to cover a support frame (3) of the seat (1 101 201 3001) and an inflatable member (2 13 14 202 203 3002) adapted to assume a resting deflated condition and an active inflated condition. The inflatable member (2 13 14 202 203 3002) is located on a side of the cover (4 104 3004) intended to be faced towards the support frame (3). The cover (4 104 3004) is adapted to contain the inflatable member (2 13 14 202 203 3002) both in the deflated condition and in the inflated condition.

No. of Pages : 29 No. of Claims : 18

(12) PATENT APPLICATION PUBLICATION
(19) INDIA
(22) Date of filing of Application :12/10/2012
(21) Application No.8779/CHENP/2012 A
(43) Publication Date : 14/03/2014

(54) Title of the invention : DEVICE AND METHOD FOR CLOSING AN OUTFLOW OPENING OF A METALLURGICAL VESSEL

(51) International classification :B22D11/18,B22D41/16,B22D41/20
(31) Priority Document No :10 2010 012 062.6
(32) Priority Date :19/03/2010
(33) Name of priority country:Germany
(86) International Application No :PCT/EP2011/053152
Filing Date :03/03/2011
(87) International Publication No :WO 2011/113701
(61) Patent of Addition to Application Number :NA
Filing Date :NA
(62) Divisional to Application Number :NA
Filing Date :NA

(71)**Name of Applicant :**
1)SMS SIEMAG AG
Address of Applicant :Eduard Schloemann Strae 4 40237 D¼sseldorf Germany
(72)**Name of Inventor :**
1)WIENS Oliver
2)WEYER Axel
3)MOSSNER Wolfgang

(57) Abstract :
The invention relates to a device (200) and a method for closing an outflow opening (120) of a metallurgical vessel (110). The device comprises a stopper rod (205) which is arranged in the vessel above the outflow opening (120) for closing the outflow opening (120) a stopper rod mechanism (210) for raising and lowering the stopper rod (205) and a sensor (220) for sensing oscillations of the stopper rod (205) or the stopper rod mechanism (210). To detect the point in time for closing the outflow opening of the metallurgical vessel at as early a time as possible and to achieve an optimum separation between molten material and slag the device (200) has a controller (230) for activating the closing means for the outflow opening (120) of the vessel depending on the factor of the oscillations at the stopper rod (205) or at the stopper rod mechanism (210) that are sensed by the sensor (220).

No. of Pages : 10 No. of Claims : 5

(12) PATENT APPLICATION PUBLICATION
(19) INDIA
(22) Date of filing of Application :07/09/2012
(21) Application No.7733/CHENP/2012 A
(43) Publication Date : 14/03/2014

(54) Title of the invention : DEVICE FOR DRAWING AND WINDING A PLURALITY OF SYNTHETIC THREADS

(51) International classification :D01D13/02,B65H67/048,B65H51/12
(31) Priority Document No :10 2010 007 737.2
(32) Priority Date :12/02/2010
(33) Name of priority country :Germany
(86) International Application No :PCT/EP2011/051352
Filing Date :01/02/2011
(87) International Publication No :WO 2011/098368
(61) Patent of Addition to Application Number :NA
Filing Date :NA
(62) Divisional to Application Number :NA
Filing Date :NA

(71)**Name of Applicant :**
1)OERLIKON TEXTILE GMBH & CO. KG
Address of Applicant :Leverkuser Strasse 65 42897 Remscheid Germany
(72)**Name of Inventor :**
1)SCHR–TER Michael

(57) Abstract :
The invention relates to an apparatus for drawing off and winding a multiplicity of synthetic threads into bobbins in two groups of mirror-symmetrically designed winding stations. The winding stations in this case extend along a winding spindle which is held so as to project freely and which is arranged with a second winding spindle on a rotatably mounted winding turret. The winding stations are assigned a draw-off device which has a plurality of mirror-symmetrically arranged godets, the axes of which are oriented transversely to the winding spindles. In order to obtain as compact an attendance-friendly arrangement as possible, according to the invention the godets are held jointly on a godet carrier which is supported in a plane of symmetry between the winding turrets on a machine stand.

No. of Pages : 27 No. of Claims : 15

(12) PATENT APPLICATION PUBLICATION
(19) INDIA
(22) Date of filing of Application :07/09/2012
(21) Application No.7734/CHENP/2012 A
(43) Publication Date : 14/03/2014

(54) Title of the invention : RHEOLOGY MODIFIER POLYMER

(51) International classification	:C08F283/04,C08G69/48,C08L77/00
(31) Priority Document No	:61/337927
(32) Priority Date	:12/02/2010
(33) Name of priority country	:U.S.A.
(86) International Application No	:PCT/US2011/000269
Filing Date	:14/02/2011
(87) International Publication No	:WO 2011/100071
(61) Patent of Addition to Application Number	:NA
Filing Date	:NA
(62) Divisional to Application Number	:NA
Filing Date	:NA

(71)**Name of Applicant :**
1)RHODIA OPERATIONS
Address of Applicant :40 Rue de la Haie Coq F 93306 Aubervilliers France
(72)**Name of Inventor :**
1)HOUGH Lawrence
2)BZDUCHA Wojciech
3)HERVE Pascal
4)HENNAUX Pierre
5)DOUGLASS Andrew
6)ADAMY Monique
7)GONZALEZ Inigo

(57) Abstract :
A polymer includes (a) one or more first monomeric units each independently comprising at least one bicycloheptyl polyether bicycloheptenyl polyether or branched (C C)alkyl polyether group per monomeric unit wherein the bicycloheptyl polyether or bicycloheptenyl polyether group may optionally be substituted on one or more ring carbon atoms by one or two (C C)alkyl groups per carbon atom and (b) one or more second monomeric units each independently comprising at least one pendant linear or branched (C C)alkyl polyether group per monomeric unit provided that the first and second monomeric units cannot both comprise a branched (C C)alkyl polyether group and is useful as a component in liquid compositions such as aqueous latex coating compositions personal care compositions home care compositions and institutional or industrial care compositions.

No. of Pages : 110 No. of Claims : 45

(12) PATENT APPLICATION PUBLICATION
(19) INDIA
(22) Date of filing of Application :07/09/2012
(21) Application No.7737/CHENP/2012 A
(43) Publication Date : 14/03/2014

(54) Title of the invention : VEHICLE SENSOR NODE

(51) International classification :B60R16/023
(31) Priority Document No :10 2010 001 827.9
(32) Priority Date :11/02/2010
(33) Name of priority country :Germany
(86) International Application No :PCT/EP2011/050774
Filing Date :20/01/2011
(87) International Publication No :WO 2011/098333
(61) Patent of Addition to Application Number :NA
Filing Date :NA
(62) Divisional to Application Number :NA
Filing Date :NA

(71)**Name of Applicant :**
1)CONTINENTAL TEVES AG & CO. OHG
Address of Applicant :Guerickestrae 7 60488 Frankfurt Germany
(72)**Name of Inventor :**
1)GNTHNER Stefan
2)KOLBE Alexander
3)SCHMID Bernhard
4)SIMON Otmar
5)ST„HLIN Ulrich

(57) Abstract :
Patent claims 1. A sensor system comprising a number of sensor elements (4) which are constructed in such a manner that they detect at least partially different primary measured variables and utilize at least partially different measuring principles, furthermore comprising a signal processing facility (1) , an interface facility (2) and a number - of functional facilities (3), characterized in that the sensor elements (4) are connected to the signal processing facility (1) which is designed in such a manner that it comprises at least in each case one of the following signal processing functions for at least one of the sensor elements (4) and/or its output signals, a fault management function (5, 9), a filtering function (6), a calculation and/or provision of a derived measured variable (7), wherein at least one measured variable is derived from at least one primary measured variable of one or more sensor elements (4), and in that all functional facilities (3) are connected to the signal processing facility (1) via the interface facility (2) and the signal processing facility (1) provides the signal processing functions (5, 6, 7, 8, 9) to the functional facilities (3).

No. of Pages : 21 No. of Claims : 14

(12) PATENT APPLICATION PUBLICATION
(19) INDIA
(22) Date of filing of Application :13/10/2010
(21) Application No.3033/CHE/2010 A
(43) Publication Date : 14/03/2014

(54) Title of the invention : CRYSTALLINE SODIUM SALT OF CEPHALOSPORIN ANTIBIOTIC

(51) International classification :C07D
(31) Priority Document No :NA
(32) Priority Date :NA
(33) Name of priority country :NA
(86) International Application No :NA
Filing Date :NA
(87) International Publication No : NA
(61) Patent of Addition to Application Number :
Filed on :01/01/1900
(62) Divisional to Application Number :NA
Filing Date :NA

(71)**Name of Applicant :**
1)ORCHID CHEMICALS & PHARMACEUTICALS LTD
Address of Applicant :ORCHID TOWERS, 313, VALLUVAR KOTTAM HIGH ROAD, NUNGAMBAKKAM, CHENNAI - 600 034 Tamil Nadu India
(72)**Name of Inventor :**
1)KANAGARAJ SURESHKUMAR
2)BALASUBRAMANIAN SIVAKUMAR
3)UDAYAMPALAYAM PALANISAMY SENTHIKUMAR

(57) Abstract :
The present invention relates to novel polymorph of Ceftiofur sodium as a crystalline product. The present invention also provides a process for the preparation of novel polymorphs of crystalline Ceftiofur sodium of formula (I).

No. of Pages : 16 No. of Claims : 10

(12) PATENT APPLICATION PUBLICATION
(19) INDIA
(22) Date of filing of Application :07/07/2009
(21) Application No.3981/CHENP/2009 A
(43) Publication Date : 14/03/2014

(54) Title of the invention : WINDSCREEN WIPING DEVICE, PARTICULARLY FOR A MOTOR VEHICLE

(51) International classification :B60S1/04
(31) Priority Document No :10 2006 058 740.5
(32) Priority Date :12/12/2006
(33) Name of priority country :Germany
(86) International Application No :PCT/EP2007/062441
Filing Date :16/11/2007
(87) International Publication No :WO 2008/071515 A1
(61) Patent of Addition to Application Number :NA
Filing Date :NA
(62) Divisional to Application Number :NA
Filing Date :NA

(71)**Name of Applicant :**
1)ROBERT BOSCH GMBH
Address of Applicant :POSTFACH 30 02 20, 70442 STUTTGART Germany
(72)**Name of Inventor :**
1)BENNER, ANDREAS
2)HUMMEL, RAINER
3)PINO JOAQUIN, JOSE CARLOS
4)DIETRICH, JAN
5)SURKAMP, GUNDOLF
6)KRAUS, ACHIM
7)BURKARD, HERMANN

(57) Abstract :
The invention relates to a windscreen wiping device (10), particularly for a motor vehicle, having a support (12) which is particularly constructed in a substantially tubular shape. A drive unit (34) with a housing (36) is arranged on the support (12), said housing having a holder (38). According to the invention, the support (12) has a section (42) which is substantially H-shaped in cross section for fastening to the holder (38).

No. of Pages : 12 No. of Claims : 7

(12) PATENT APPLICATION PUBLICATION
(19) INDIA
(22) Date of filing of Application :02/11/2012
(21) Application No.9354/CHENP/2012 A
(43) Publication Date : 14/03/2014

(54) Title of the invention : HYDROGEN AND NITROGEN RECOVERY FROM AMMONIA PURGE GAS

(51) International classification :C01C1/04,C01B3/02,C01B3/50
(31) Priority Document No :10159190.7
(32) Priority Date :07/04/2010
(33) Name of priority country :EPO
(86) International Application No :PCT/EP2010/056753
Filing Date :17/05/2010
(87) International Publication No :WO 2011/124268
(61) Patent of Addition to Application Number :NA
Filing Date :NA
(62) Divisional to Application Number :NA
Filing Date :NA

(71)**Name of Applicant :**
1)AMMONIA CASALE SA
Address of Applicant :Via Giulio Pocobelli 6 CH 6900 Lugano Besso Switzerland
(72)**Name of Inventor :**
1)OSTUNI Raffaele
2)FILIPPI Ermanno
3)SKINNER Geoffrey Frederick

(57) Abstract :
An ammonia plant is disclosed where ammonia purge gas (20) is sent to a cryogenic recovery unit said recovery unit comprising means of cooling (102 202 302 402 502) and a high pressure phase separator (103 203 303 403 503) operating at loop pressure; inside said unit the purge gas (20) is cooled to a cryogenic temperature and a partial liquefaction of methane and argon is achieved; the high pressure phase separator separates the cooled stream into a gaseous stream and a bottom liquid; the gaseous stream is reheated in a passage of a heat exchanger; the unit is then capable to export a gaseous stream (123 223 323 423 523) containing nitrogen and hydrogen at loop pressure that can be reintroduced at the suction side of the circulator (4) of the loop.

No. of Pages : 35 No. of Claims : 14

(12) PATENT APPLICATION PUBLICATION
(19) INDIA
(22) Date of filing of Application :02/11/2012
(21) Application No.9357/CHENP/2012 A
(43) Publication Date : 14/03/2014

(54) Title of the invention : POLYAMIDE BASED POLYMER POWDER USE THEREOF IN A MOLDING METHOD AND MOLDED ARTICLES MADE FROM SAID POLYMER POWDER

(51) International classification :C08L77/02,C08L77/06,B29C67/00
(31) Priority Document No :10 2010 014 443.6
(32) Priority Date :09/04/2010
(33) Name of priority country :Germany
(86) International Application No :PCT/EP2011/055316
Filing Date :06/04/2011
(87) International Publication No :WO 2011/124588
(61) Patent of Addition to Application Number :NA
Filing Date :NA
(62) Divisional to Application Number :NA
Filing Date :NA

(71)**Name of Applicant :**
1)EVONIK DEGUSSA GMBH
Address of Applicant :Rellinghauser Strasse 1 11 45128 Essen Germany
(72)**Name of Inventor :**
1)BAUMANN Franz Erich
2)DIEKMANN Wolfgang
3)KTING Beatrice
4)STEMMER Heike
5)GREBE Maik
6)WARNKE Kristiane
7)MONSHEIMER Sylvia
8)H„GER Harald

(57) Abstract :
The invention relates to a polymer powder for use in a layer by layer method in which areas of each powder layer are selectively fused by introducing electromagnetic energy. Said polymer powder contains: at least one AB type polyamide produced by polymerizing lactams comprising 10 to 12 carbon atoms in the monomer unit or polycondensing the corresponding amino carboxylic acids comprising 10 to 12 carbon atoms in the monomer unit and at least one AABB type polyamide produced by polycondensing diamines and dicarboxylic acids each of which comprises 10 to 14 carbon atoms in the monomer units the AB type polyamide containing up to 20 mole % of the AABB comonomer units and the AABB type polyamide containing up to 20 mole % of the AB monomer units. The invention also relates to a method for producing such a powder a layer by layer method for producing a molded article from such a powder in which areas of each layer are selectively fused by introducing electromagnetic energy the selectivity being obtained using masks or by applying inhibitors absorbers or susceptors or focusing the applied energy and molded articles produced in said manner.

No. of Pages : 43 No. of Claims : 15

(12) PATENT APPLICATION PUBLICATION
(19) INDIA
(22) Date of filing of Application :06/09/2012
(21) Application No.7696/CHENP/2012 A
(43) Publication Date : 14/03/2014

(54) Title of the invention : DEVICE AND METHOD FOR CALIBRATING RECIPROCITY ERRORS

(51) International classification :H04B7/005,H04B7/06,H04B7/08
(31) Priority Document No :201010115749.2
(32) Priority Date :12/02/2010
(33) Name of priority country :China
(86) International Application No :PCT/CN2010/001595
Filing Date :12/10/2010
(87) International Publication No :WO 2011/097785
(61) Patent of Addition to Application Number :NA
Filing Date :NA
(62) Divisional to Application Number :NA
Filing Date :NA

(71)**Name of Applicant :**
1)ALCATEL LUCENT SHANGHAI BELL CO. LTD
Address of Applicant :388# Ningqiao Road Pudong Xinqu Shanghai 201206 China
2)ALCATEL LUCENT
(72)**Name of Inventor :**
1)LUO Qinglin
2)SHI Jing

(57) Abstract :
Disclosed is a method for calibrating reciprocity errors which includes the following steps: measuring a downlink channel response ; measuring an uplink channel response ; on the basis of and and according to a reciprocity model = calculating by means of a least square criterion () algorithm either one of a user equipment reciprocity error or a base station reciprocity error ; then calculating the other one of or by means of a minimum mean square error criterion (MMSE) algorithm and according to the already calculated or ; then performing a reciprocity error calibration operation using said calculated user equipment reciprocity error and said base station reciprocity error . Also disclosed is a reciprocity error calibration device for performing the reciprocity error calibration. The method and device for calibrating the reciprocity errors according to the present invention can provide better performance of reciprocity error calibration.

No. of Pages : 25 No. of Claims : 12

(12) PATENT APPLICATION PUBLICATION
(19) INDIA
(22) Date of filing of Application :06/09/2012
(21) Application No.7697/CHENP/2012 A
(43) Publication Date : 14/03/2014

(54) Title of the invention : CUTTING TOOL

(51) International classification :C23C14/06,C23C14/16,B23B27/14
(31) Priority Document No :1020100012965
(32) Priority Date :11/02/2010
(33) Name of priority country :Republic of Korea
(86) International Application No :PCT/KR2010/005735
Filing Date :26/08/2010
(87) International Publication No :WO 2011/099683
(61) Patent of Addition to Application Number :NA
Filing Date :NA
(62) Divisional to Application Number :NA
Filing Date :NA

(71)**Name of Applicant :**
1)TAEGUTEC LTD.
Address of Applicant :304 Yonggye ri Gachang myeon Dalseong gun Daegu 711 865 Republic of Korea
(72)**Name of Inventor :**
1)YUN Chol Woen
2)JEONG Yong Hyun
3)YOON Moo Young

(57) Abstract :
The cutting tool of the present invention comprises a base material and a multi layer coating formed thereon. The multi layer coating comprises an A layer a B layer and a C layer repeatedly deposited in the order of A layer C layer and B layer from the base material toward an outer surface of the multi layer coating. The A layer consists of a layers and a layers wherein 820 layers of said a layers and a layers are non periodically deposited per 100nm. Each unit layer of the A layer B layer and C layer has a thickness of 0.52.0µm 0.1µm0.5µm and 5595nm respectively.

No. of Pages : 26 No. of Claims : 4

(12) PATENT APPLICATION PUBLICATION
(19) INDIA
(22) Date of filing of Application :12/10/2012
(21) Application No.8756/CHENP/2012 A
(43) Publication Date : 14/03/2014

(54) Title of the invention : θZ DRIVE APPARATUS AND STAGE APPARATUS

(51) International classification :H01L21/68,H01L21/027
(31) Priority Document No :2010-088272
(32) Priority Date :07/04/2010
(33) Name of priority country :Japan
(86) International Application No :PCT/JP2010/072075
Filing Date :09/12/2010
(87) International Publication No :WO 2011/125260 A1
(61) Patent of Addition to Application Number :NA
Filing Date :NA
(62) Divisional to Application Number :NA
Filing Date :NA

(71)**Name of Applicant :**
1)KABUSHIKI KAISHA YASKAWA DENKI
Address of Applicant :2 1 Kurosaki shiroishi Yahatanishi ku Kitakyushu shi Fukuoka 8060004 Japan
(72)**Name of Inventor :**
1)KUBOTA Yoshiaki
2)SHIKAYAMA Toru
3)DAN Yoichiro
4)KONO Toshiyuki
5)TOYODA Akihito

(57) Abstract :
In this θZ drive apparatus (110), at least three coil portions (43a, 43b, and 43c) are arranged to be capable of driving a stage (30) in a direction Z, a direction θx which is a rotation direction employing a direction X in a horizontal plane as a center line of rotation, and a direction θy which is a rotation direction employing a direction Y in the horizontal plane orthogonal to the direction X as a center line of rotation.

No. of Pages : 70 No. of Claims : 20

(12) PATENT APPLICATION PUBLICATION
(19) INDIA
(22) Date of filing of Application :24/09/2012
(21) Application No.8208/CHENP/2012 A
(43) Publication Date : 14/03/2014

(54) Title of the invention : POSITION MEASUREMENT DEVICE METHOD FOR GENERATING LOCATIONAL INFORMATION AND STORAGE MEDIUM

(51) International classification	:G01C21/00,G08G 1/13,G08G1/00
(31) Priority Document No	:2010072972
(32) Priority Date	:26/03/2010
(33) Name of priority country	:Japan
(86) International Application No	:PCT/JP2011/057443
Filing Date	:25/03/2011
(87) International Publication No	:WO 2011/118806
(61) Patent of Addition to Application Number	:NA
Filing Date	:NA
(62) Divisional to Application Number	:NA
Filing Date	:NA

(71)**Name of Applicant :**
1)NEC CORPORATION
Address of Applicant :7 1 Shiba 5 chome Minato ku Tokyo 1088001 Japan
(72)**Name of Inventor :**
1)KITATANI Kenichi

(57) Abstract :
The disclosed position measurement device includes a position measurement section (11) and a positional data processing section (14). The position measurement section (11) measures the present position and successively stores positional data in a positional data storage region (121). The positional data processing section (14) determines on the basis of the successively stored positional data whether a user has been in a single area for over a predetermined period of time and if it is determined so the positional data processing section stores the positional data at that point of time in a locational information storage region (122) as locational information. Also if the function(s) of a functional section group (13) is/are used or if a predetermined external device or service is used via a communication section (15) then the positional data processing section (14) stores the positional data at that point of time in the locational information storage region (122) as locational information.

No. of Pages : 29 No. of Claims : 9

(12) PATENT APPLICATION PUBLICATION
(19) INDIA
(22) Date of filing of Application :24/09/2012
(21) Application No.8209/CHENP/2012 A
(43) Publication Date : 14/03/2014

(54) Title of the invention : FEEDBLOCK FOR MAKING MULTILAYERED FILMS

(51) International classification :B29C47/06,B29C47/12,B29C47/14
(31) Priority Document No :61/317472
(32) Priority Date :25/03/2010
(33) Name of priority country :U.S.A.
(86) International Application No :PCT/US2011/026964
Filing Date :03/03/2011
(87) International Publication No :WO 2011/119309
(61) Patent of Addition to Application Number :NA
Filing Date :NA
(62) Divisional to Application Number :NA
Filing Date :NA

(71)**Name of Applicant :**
1)3M INNOVATIVE PROPERTIES COMPANY
Address of Applicant :3M Center Post Office Box 33427 Saint Paul Minnesota 55133 3427 U.S.A.
(72)**Name of Inventor :**
1)FAY William T.
2)NEAVIN Terence D.
3)BIEGLER Robert M.
4)KOPECKY William J.
5)ZILLIG Daniel J.

(57) Abstract :
Generally the present description relates to a feedblock and a multilayer film die for creating polymeric multilayered films. The feedblock includes a stack of many layers of thin metal plates having flow profile cutouts to create alternating layers of polymer.

No. of Pages : 50 No. of Claims : 44

(12) PATENT APPLICATION PUBLICATION
(19) INDIA
(22) Date of filing of Application :24/09/2012
(21) Application No.8211/CHENP/2012 A
(43) Publication Date : 14/03/2014

(54) Title of the invention : NON NUCLEOSIDE REVERSE TRANSCRIPTASE INHIBITORS

(51) International classification :C07D401/06,A61K31/4439,A61P31/18
(31) Priority Document No :61/318824
(32) Priority Date :30/03/2010
(33) Name of priority country :U.S.A.
(86) International Application No :PCT/CA2011/000320
Filing Date :28/03/2011
(87) International Publication No :WO 2011/120133
(61) Patent of Addition to Application Number :NA
Filing Date :NA
(62) Divisional to Application Number :NA
Filing Date :NA

(71)**Name of Applicant :**
1)MERCK CANADA INC.
Address of Applicant :16711 Trans Canada Highway Kirkland Qubec H9H 3L1 Canada
(72)**Name of Inventor :**
1)BURCH Jason
2)COTE Bernard
3)NGUYEN Natalie
4)LI Chun Sing
5)ST ONGE Miguel
6)GAUVREAU Danny

(57) Abstract :
Heteroaromatic compounds of Formula I: (I) are HIV reverse transcriptase inhibitors wherein R R R; R and R are defined herein. The compounds of Formula I and their pharmaceutically acceptable salts are useful in the inhibition of HIV reverse transcriptase the prophylaxis and treatment of infection by HIV and in the prophylaxis delay in the onset or progression and treatment of AIDS. The compounds and their salts can be employed as ingredients in pharmaceutical compositions optionally in combination with other antivirals immunomodulators antibiotics or vaccines.

No. of Pages : 81 No. of Claims : 27

(12) PATENT APPLICATION PUBLICATION
(19) INDIA
(22) Date of filing of Application :10/09/2012
(21) Application No.7795/CHENP/2012 A
(43) Publication Date : 14/03/2014

(54) Title of the invention : DIRECT SCATTER LOADING OF EXECUTABLE SOFTWARE IMAGE FROM A PRIMARY PROCESSOR TO ONE OR MORE SECONDARY PROCESSOR IN A MULTI PROCESSOR SYSTEM

(51) International classification :G06F15/177
(31) Priority Document No :61/316369
(32) Priority Date :22/03/2010
(33) Name of priority country :U.S.A.
(86) International Application No :PCT/US2011/029484
Filing Date :22/03/2011
(87) International Publication No :WO 2011/119648
(61) Patent of Addition to Application Number :NA
Filing Date :NA
(62) Divisional to Application Number :NA
Filing Date :NA

(71)**Name of Applicant :**
1)QUALCOMM Incorporated
Address of Applicant :Attn: International IP Administration 5775 Morehouse Drive San Diego California 92121 U.S.A.
(72)**Name of Inventor :**
1)GUPTA Nitin
2)KIM Daniel H.
3)MALAMANT Igor
4)HAEHNICHEN Steve

(57) Abstract :
In a multi processor system an executable software image including an image header and a segmented data image is scatter loaded from a first processor to a second processor. The image header contains the target locations for the data image segments to be scatter loaded into memory of the second processor. Once the image header has been processed the data segments may be directly loaded into the memory of the second processor without further CPU involvement from the second processor.

No. of Pages : 30 No. of Claims : 24

(12) PATENT APPLICATION PUBLICATION
(19) INDIA
(22) Date of filing of Application :10/09/2012
(21) Application No.7797/CHENP/2012 A
(43) Publication Date : 14/03/2014

(54) Title of the invention : MULTI PORT NON VOLATILE MEMORY THAT INCLUDES A RESISTIVE MEMORY ELEMENT

(51) International classification	:G11C8/16,G11C11/16,G11C13/00
(31) Priority Document No	:12/728337
(32) Priority Date	:22/03/2010
(33) Name of priority country	:U.S.A.
(86) International Application No	:PCT/US2011/029483
Filing Date	:22/03/2011
(87) International Publication No	:WO 2011/119647
(61) Patent of Addition to Application Number	:NA
Filing Date	:NA
(62) Divisional to Application Number	:NA
Filing Date	:NA

(71)**Name of Applicant :**
1)QUALCOMM Incorporated
Address of Applicant :Attn: International Ip Administration 5775 Morehouse Drive San Diego California 92121 U.S.A.
(72)**Name of Inventor :**
1)RAO Hari M.
2)KIM Jung Pill

(57) Abstract :
A system and method to access a multi port non volatile memory that includes a resistive memory element is disclosed. In a particular embodiment a multi port non volatile memory device is disclosed that includes a resistive memory cell and multiple ports coupled to the resistive memory cell.

No. of Pages : 37 No. of Claims : 41

(12) PATENT APPLICATION PUBLICATION
(19) INDIA
(22) Date of filing of Application :20/09/2012
(21) Application No.8113/CHENP/2012 A
(43) Publication Date : 14/03/2014

(54) Title of the invention : METHOD FOR PRODUCING REGULATORY DENDRITIC CELLS

(51) International classification :C12N5/0784,A61K35/12,A61P29/00
(31) Priority Document No :2010037039
(32) Priority Date :23/02/2010
(33) Name of priority country :Japan
(86) International Application No :PCT/JP2011/053906
Filing Date :23/02/2011
(87) International Publication No :WO 2011/105394
(61) Patent of Addition to Application Number :NA
Filing Date :NA
(62) Divisional to Application Number :NA
Filing Date :NA

(71)**Name of Applicant :**
1)NIPPON KAYAKU KABUSHIKI KAISHA
Address of Applicant :11 2 Fujimi 1 chome Chiyoda ku Tokyo 1028172 Japan
2)NATIONAL UNIVERSITY CORPORATION HOKKAIDO UNIVERSITY
(72)**Name of Inventor :**
1)TODO Satoru
2)YAMASHITA Kenichiro
3)SHIBASAKI Susumu

(57) Abstract :
An object of the present invention is to establish a method that enables safe and convenient large-scale preparation of regulatory dendritic cells. The present invention provides a method for preparing regulatory dendritic cells, which comprises culturing cells that can be induced to result in regulatory dendritic cells in the presence of a [l,2,4]triazolo[1,5-a]pyrirnidine derivative.

No. of Pages : 26 No. of Claims : 17

(12) PATENT APPLICATION PUBLICATION
(19) INDIA
(22) Date of filing of Application :16/11/2012
(21) Application No.9679/CHENP/2012 A
(43) Publication Date : 14/03/2014

(54) Title of the invention : PYRROLO [2 3 B] PYRAZINE 7 CARBOXAMIDE DERIVATIVES AND THEIR USE AS JAK AND SYK INHIBITORS

(51) International classification :C07D487/04,C07D519/00,A61K31/4985
(31) Priority Document No :61/346503
(32) Priority Date :20/05/2010
(33) Name of priority country :U.S.A.
(86) International Application No :PCT/EP2011/057911
Filing Date :17/05/2011
(87) International Publication No :WO 2011/144585
(61) Patent of Addition to Application Number :NA
Filing Date :NA
(62) Divisional to Application Number :NA
Filing Date :NA

(71)**Name of Applicant :**
1)F. HOFFMANN LA ROCHE AG
Address of Applicant :Grenzacherstrasse 124 CH 4070 Basel Switzerland
(72)**Name of Inventor :**
1)HENDRICKS Robert Than
2)HERMANN Johannes Cornelius
3)JAIME FIGUEROA Saul
4)KONDRU Rama K.
5)LOU Yan
6)LYNCH Stephen M.
7)OWENS Timothy D.
8)SOTH Michael
9)YEE Calvin Wesley

(57) Abstract :
The present invention relates to the use of novel pyrrolopyrazine derivatives of Formula (I) wherein the variables Q and R R and R are defined as described herein which inhibit JAK and SYK and are useful for the treatment of auto immune and inflammatory diseases.

No. of Pages : 331 No. of Claims : 26

(12) PATENT APPLICATION PUBLICATION
(19) INDIA
(22) Date of filing of Application :18/10/2012
(21) Application No.8965/CHENP/2012 A
(43) Publication Date : 14/03/2014

(54) Title of the invention : CATALYST REGENERATION ZONE SPLIT INTO SECTORS FOR REGENERATIVE CATALYTIC UNITS

(51) International classification :B01J38/24,B01J23/90,B01J8/12
(31) Priority Document No :1001161
(32) Priority Date :24/03/2010
(33) Name of priority country :France
(86) International Application No:PCT/FR2011/000103
Filing Date :18/02/2011
(87) International Publication No :WO 2011/117478
(61) Patent of Addition to Application Number :NA
Filing Date :NA
(62) Divisional to Application Number :NA
Filing Date :NA

(71)**Name of Applicant :**
1)IFP ENERGIES NOUVELLES
Address of Applicant :1 et 4 avenue de Bois Prau F 92852 Rueil Malmaison Cedex France
(72)**Name of Inventor :**
1)SANCHEZ Eric
2)BAZER BACHI Frdric
3)FISCHER Batrice

(57) Abstract :
The present invention describes a combustion zone of a regenerative catalytic unit for the continuous regeneration of the catalyst said combustion zone being of annular shape and split into at least two combustion stages each stage being split into a number N of substantially equal radial sectors the catalyst flowing under gravity from a sector of the first combustion stage to the second combustion stage sector situated vertically below it by means of down legs and the circulation of the combustion gas being such that the combustion gas flows successively through all the sectors of the first combustion stage in any arbitrary order then through all the sectors of the second combustion stage in any arbitrary order.

No. of Pages : 19 No. of Claims : 9

(12) PATENT APPLICATION PUBLICATION
(19) INDIA
(22) Date of filing of Application :16/11/2012
(21) Application No.9685/CHENP/2012 A
(43) Publication Date : 14/03/2014

(54) Title of the invention : NANOMETER SIZED COPPER BASED CATALYST PRODUCTION METHOD THEREOF AND ALCOHOL PRODUCTION METHOD USING THE SAME THROUGH DIRECT HYDROGENATION OF CARBOXYLIC ACID

(51) International classification :B01J23/76,B01J23/80,B01J37/03
(31) Priority Document No :1020100036679
(32) Priority Date :21/04/2010
(33) Name of priority country :Republic of Korea
(86) International Application No :PCT/KR2011/002874
Filing Date :21/04/2011
(87) International Publication No :WO 2011/132957
(61) Patent of Addition to Application Number :NA
Filing Date :NA
(62) Divisional to Application Number :NA
Filing Date :NA

(71)**Name of Applicant :**
1)SK INNOVATION CO. LTD.
Address of Applicant :99 Seorin dong Jongro gu Seoul 110 110 Republic of Korea
(72)**Name of Inventor :**
1)KIM Hee Soo
2)LEE Seong Ho
3)YOON Young Seek
4)OH Seung Hoon
5)CHUNG Young Min
6)KIM Ok Youn
7)JEON Hee Jung

(57) Abstract :
Disclosed are a nanometer sized copper based catalyst production method and a catalyst produced by the same wherein the method comprises the steps of: dissolving a first constituent that is a copper precursor a second precursor of one or more selected from a transition metal an alkali earth metal and group IIIb constituents and a third precursor of one or more selected from alumina silica silica alumina magnesia titania zirconia and the group formed of carbon in an aqueous solution and then agitating the mixture; using NaCO and NaOH to settle the mixed solution obtained through the agitation into a catalyst precursor precipitate; and washing and filtering the formed catalyst precursor precipitate. Also disclosed is an alcohol production method in which a nanometer sized copper based catalyst produced from the above production method of the present invention is used and a single acid or mixed carboxylic acid of two or more types derived from a microorganism fermentation broth is reacted with hydrogen.

No. of Pages : 47 No. of Claims : 14

(12) PATENT APPLICATION PUBLICATION
(19) INDIA
(22) Date of filing of Application :27/04/2009
(21) Application No.969/CHE/2009 A
(43) Publication Date : 14/03/2014

(54) Title of the invention : METHOD AND SYSTEM FOR ACTIVATING A DECODER DEVICE

(51) International classification :G11C
(31) Priority Document No :8155213.5
(32) Priority Date :25/04/2008
(33) Name of priority country :EPO
(86) International Application No :NA
Filing Date :NA
(87) International Publication No : NA
(61) Patent of Addition to Application Number :NA
Filing Date :NA
(62) Divisional to Application Number :NA
Filing Date :NA

(71)**Name of Applicant :**
1)IRDETO ACCESS B.V.
Address of Applicant :JUPITERSTRAAT 42, 2132 HD HOOFDDORP, Netherlands
(72)**Name of Inventor :**
1)BOSSCHA, ALBERT, JAN,

(57) Abstract :
The invention provides a method for activating one ore more secondary decoder devices in a home network, A head-end system activates a primary decoder device and initializes the secondary decoder devices. The primary decoder device activates the initialized secondary decoder device. The secondary decoder device is deactivated upon expiration of a timer value until re-activated by the primary decoder device.

No. of Pages : 24 No. of Claims : 8

(12) PATENT APPLICATION PUBLICATION
(19) INDIA
(22) Date of filing of Application :14/11/2012
(21) Application No.9615/CHENP/2012 A
(43) Publication Date : 14/03/2014

(54) Title of the invention : VERTICAL MILL

(51) International classification :B02C15/04
(31) Priority Document No :2010115485
(32) Priority Date :19/05/2010
(33) Name of priority country :Japan
(86) International Application No :PCT/JP2011/061080
Filing Date :13/05/2011
(87) International Publication No :WO 2011/145528
(61) Patent of Addition to Application Number :NA
Filing Date :NA
(62) Divisional to Application Number :NA
Filing Date :NA

(71)**Name of Applicant :**
1)MITSUBISHI HEAVY INDUSTRIES LTD.
Address of Applicant :16 5 Konan 2 chome Minato ku Tokyo 1088215 Japan
(72)**Name of Inventor :**
1)YAMAGUCHI Yoshiki
2)ARIMA Kenichi
3)IIDA Yutaka
4)UEMATSU Yoshishige

(57) Abstract :
Disclosed is a vertical mill wherein: a pulverizing table (13) is supported within a housing (11) and can be driven so as to rotate about a rotational axis along the vertical direction; a pulverizing roller (18) which can rotate in conjunction with the rotation of the pulverizing table (13) is disposed so as to face the upper portion of the pulverizing table (13); and a cutter roller (19) which can rotate in conjunction with the rotation of the pulverizing table (13) is disposed so as to face the upper portion of the pulverizing table (13). As a consequence it is possible to improve pulverization efficiency by efficiently pulverizing solid materials such as biomass.

No. of Pages : 21 No. of Claims : 5

(12) PATENT APPLICATION PUBLICATION
(19) INDIA
(22) Date of filing of Application :14/11/2012
(21) Application No.9617/CHENP/2012 A
(43) Publication Date : 14/03/2014

(54) Title of the invention : BIOMASS PULVERISATION DEVICE AND BIOMASS/COAL CO COMBUSTION SYSTEM

(51) International classification :B02C15/04,C10L5/44,F23C1/00
(31) Priority Document No :2010112464
(32) Priority Date :14/05/2010
(33) Name of priority country :Japan
(86) International Application No :PCT/JP2011/060997
Filing Date :12/05/2011
(87) International Publication No:WO 2011/142437
(61) Patent of Addition to Application Number :NA
Filing Date :NA
(62) Divisional to Application Number :NA
Filing Date :NA

(71)**Name of Applicant :**
1)MITSUBISHI HEAVY INDUSTRIES LTD.
Address of Applicant :16 5 Konan 2 chome Minato ku Tokyo 1088215 Japan
(72)**Name of Inventor :**
1)TAKEUCHI Kazuhiro
2)DAIMARU Takuichiro
3)KINOSHITA Masaaki
4)YAMAGUCHI Yoshiki
5)KAI Norichika

(57) Abstract :
Disclosed is a pulverisation device (13) equipped with: a raw material supply pipe (12) which supplies biomass raw material (11) from above in the vertical axis direction the location where the biomass raw material (11) is pulverised; a pulverisation table (14) on which the biomass raw material (11) is placed; a pulverisation roller (16) which moves in conjunction with the rotation of the pulverisation table (14) and which pulverises the biomass raw material (11) by pressing force; a blowing means which generates an updraft; and a classifier (19) which classifies the pulverised biomass powder (17). A plurality of table grooves (31) are formed on the surface of a table liner (14b) of the pulverisation table (14) radiating towards the outer edge side of the pulverisation table (14) from the inner peripheral section thereof and the tips of the grooves (31) are near the central section of the table liner (14b).

No. of Pages : 33 No. of Claims : 9

(12) PATENT APPLICATION PUBLICATION
(19) INDIA
(22) Date of filing of Application :14/11/2012
(21) Application No.9607/CHENP/2012 A
(43) Publication Date : 14/03/2014

(54) Title of the invention : TRANSFORMER FEEDTHROUGH

(51) International classification :F16J15/00,H01F27/04,H01H9/00
(31) Priority Document No :10 2010 020 139.1
(32) Priority Date :11/05/2010
(33) Name of priority country :Germany
(86) International Application No :PCT/EP2011/000853
Filing Date :23/02/2011
(87) International Publication No :WO 2011/141077
(61) Patent of Addition to Application Number :NA
Filing Date :NA
(62) Divisional to Application Number :NA
Filing Date :NA

(71)**Name of Applicant :**
1)MASCHINENFABRIK REINHAUSEN GMBH
Address of Applicant :Falkensteinstrae 8 93059 Regensburg Germany
(72)**Name of Inventor :**
1)FIOLKA Andreas

(57) Abstract :
The invention relates to an arrangement comprising a transformer housing (2) having a housing opening (2.1) a shaft feed through (3) arranged in or on the housing opening (2.1) having a shaft (4) and a shaft receptacle (5) that at least partially circumferentially surrounds the shaft (4) wherein the shaft receptacle (5) has at least one bearing unit (6) and a first sealing unit (7) for supporting and sealing the shaft relative to the shaft receptacle (5) and wherein at least one second sealing unit (8) is provided which is accommodated in the shaft receptacle (5) in such a way that the at least one second sealing unit can be replaced.

No. of Pages : 15 No. of Claims : 10

(12) PATENT APPLICATION PUBLICATION
(19) INDIA
(22) Date of filing of Application :14/11/2012
(21) Application No.9608/CHENP/2012 A
(43) Publication Date : 14/03/2014

(54) Title of the invention : ALUMINA CERAMIC FOR SPARK PLUG INSULATOR

(51) International classification :C04B35/03,C04B35/04,C04B35/10
(31) Priority Document No :61/327201
(32) Priority Date :23/04/2010
(33) Name of priority country :U.S.A.
(86) International Application No :PCT/US2011/033374
Filing Date :21/04/2011
(87) International Publication No :WO 2011/133741
(61) Patent of Addition to Application Number :NA
Filing Date :NA
(62) Divisional to Application Number :NA
Filing Date :NA

(71)**Name of Applicant :**
1)FEDERAL MOGUL IGNITION COMPANY
Address of Applicant :26555 Northwestern Highway Southfield MI 48033 U.S.A.
(72)**Name of Inventor :**
1)WALKER William J.
2)SACCOCCIA Michael E.

(57) Abstract :
A spark plug includes an insulator formed of a ceramic material. The ceramic material comprises A1O in an amount of 98.00 wt% to 99.50 wt%; Group 2 oxides in an amount of 0. 1 6 wt% to 0.70 wt%; SiO in an amount of 0.25 wt% to 0.75 wt%. Group 4 oxides i n an amount of 0.01 wt% to 0. 16 wt%. Group 1 oxides in an amount less than 0.0060 wt% and PO in an amount of less than 0.0040 wt%. The ALO is formed of particles having a D50 median particle size by volume of 1.2 μ to 1.8 μ. The ceramic material is pressed sintered and formed to a predetermined shape. The sintered ceramic material includes a glass phase comprising the AIO Group 2 oxides and SiO2. The sintered ceramic material also includes secondary crystals of calcium hexa aluminate (CaAl O) spinel (MgAlO) anorthite (CaAlSiO) and mullite (AlSiO).

No. of Pages : 28 No. of Claims : 21

(12) PATENT APPLICATION PUBLICATION
(19) INDIA
(22) Date of filing of Application :05/09/2013

(21) Application No.1038/KOL/2013 A
(43) Publication Date : 14/03/2014

(54) Title of the invention : VALVE DRIVE ASSEMBLY AND VALVE USING THE SAME

(51) International classification	:C21D 1/00	
(31) Priority Document No	:10 2012 108 379.7	
(32) Priority Date	:07/09/2012	
(33) Name of priority country	:Germany	
(86) International Application No	:NA	
Filing Date	:NA	
(87) International Publication No	: NA	
(61) Patent of Addition to Application Number	:NA	
Filing Date	:NA	
(62) Divisional to Application Number	:NA	
Filing Date	:NA	

(71)**Name of Applicant :**
1)JOHNSON ELECTRIC S.A.
Address of Applicant :BAHNHOFSTRASSE 18, CH-3280 MURTEN SWITZERLAND
(72)**Name of Inventor :**
1)JOERG GASSMAN
2)THOMAS MUELLER
3)SEBASTIAN FRAULOB

(57) Abstract :
The invention concerns an valve drive assembly for a valve unit for regulating a flow of fluid with a lead-through of an operating rod (3) through a flange (4), particularly the arrangement of operating rod (3) to the flange (4) for adjusting a defined flow of fluid. The assembly comprises a flange (4), and operating rod (3) and an annular element. The operating rod (3) is disposed through said flange, and annular element is disposed between flange (4) and operating rod (3) defining an annular gap (12) between the annular element and the operating rod. An effective length of the annular gap (12) exceeds a thickness of the flange (4). This invention leads to considerable cost savings, as the component parts can now be produced more simply using manufacturing processes known from mass production, such as deep-drawing or even stamping.

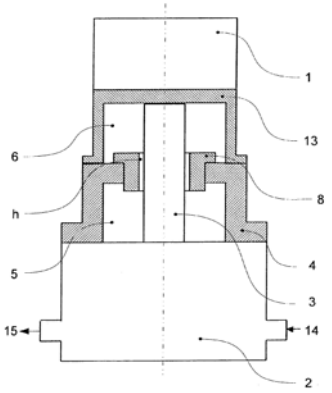

No. of Pages : 15 No. of Claims : 11

(12) PATENT APPLICATION PUBLICATION
(19) INDIA
(22) Date of filing of Application :05/09/2013
(21) Application No.1039/KOL/2013 A
(43) Publication Date : 14/03/2014

(54) Title of the invention : INTERNAL COMBUSTION ENGINE WITH DOUBLE CRANK MECHANISM

(51) International classification	:F04B 9/00
(31) Priority Document No	:10 2012 017 788.7
(32) Priority Date	:07/09/2012
(33) Name of priority country	:Germany
(86) International Application No	:NA
Filing Date	:NA
(87) International Publication No	: NA
(61) Patent of Addition to Application Number	:NA
Filing Date	:NA
(62) Divisional to Application Number	:NA
Filing Date	:NA

(71)**Name of Applicant :**
1)PETER PELZ
Address of Applicant :DAIMLERWEG 2, 82538 GERETSRIED, GERMANY
(72)**Name of Inventor :**
1)PETER PELZ

(57) Abstract :
An internal combustion engine comprises at least one cylinder, a piston which is movable to and fro in the cylinder, whereby a working chamber is created in the cylinder above the piston, one piston rod which is rigidly fixed to the piston on the side remote from the working chamber, and which in turn is guided linearly movable and sealed through an opening in a cylinder partition which is situated below the piston, whereby a fresh air chamber is configured between the piston and the partition from which compressed fresh air can be fed into the working chamber, and a double crank mechanism situated on the side of the partition remote from the piston, and having two counter- rotating and common speed cranks, which are pivotally connected to the piston rod by means of con-rods. The crank discs of the double crank mechanism can be utilized as pumping member for a liquid pump and/or as a rotor of an electric machine and/or to actuate charge cycle valves. The con-rods can be attached to the crank discs by simple, captive held stub axles.

No. of Pages : 23 No. of Claims : 10

(12) PATENT APPLICATION PUBLICATION
(19) INDIA
(22) Date of filing of Application :15/05/2013
(21) Application No.558/KOL/2013 A
(43) Publication Date : 14/03/2014

(54) Title of the invention : AUTOMATIC MICROPHONE MUTING OF UNDESIRED NOISES

(51) International classification	:H04M 1/00
(31) Priority Document No	:61/698,993
(32) Priority Date	:10/09/2012
(33) Name of priority country	:U.S.A.
(86) International Application No	:NA
Filing Date	:NA
(87) International Publication No	: NA
(61) Patent of Addition to Application Number	:NA
Filing Date	:NA
(62) Divisional to Application Number	:NA
Filing Date	:NA

(71)**Name of Applicant :**
1)POLYCOM, INC.
Address of Applicant :6001 AMERICA CENTER DRIVE, SAN JOSE, CALIFORNIA 95002 U.S.A.
(72)**Name of Inventor :**
1)LIU, YIBO
2)CHU, PETER L.
3)RODMAN, JEFF

(57) Abstract :
Methods and systems for cancelation of table noise in a speaker system used for video or audio conferencing are disclosed. Table noise is cancelled in one embodiment by providing a signal or a message whenever a key is depressed on a keyboard or a mouse is clicked. When the key depression signal or message is received, the system evaluates whether speech is occurring. If speech is not occurring, then the microphone in the system is muted. However, if speech is occurring, the microphone is not muted for a period of time to allow the speech to be transmitted to the far end. This allows the conference to be continued in the presence of keyboard sounds if speech is occurring at the same time but also silences the keyboard sounds if speech is not occurring.

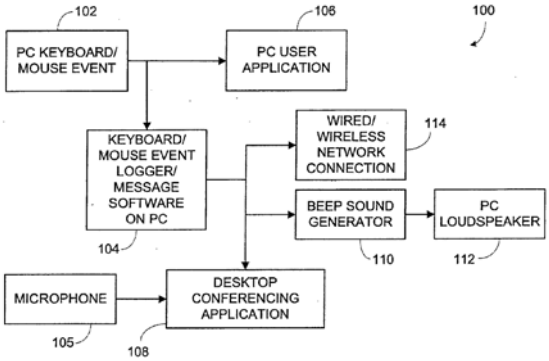

No. of Pages : 12 No. of Claims : 15

(12) PATENT APPLICATION PUBLICATION
(19) INDIA
(22) Date of filing of Application :13/01/2014
(21) Application No.60/KOLNP/2014 A
(43) Publication Date : 14/03/2014

(54) Title of the invention : VACUUM SWITCH INCLUDING AN INSULATING BODY HAVING A NUMBER OF TRANSPARENT PORTIONS MADE OF A SINGLE CRYSTAL ALUMINA

(51) International classification :H01H33/662
(31) Priority Document No :13/195,070
(32) Priority Date :01/08/2011
(33) Name of priority country :U.S.A.
(86) International Application No :PCT/US2012/042171
Filing Date :13/06/2012
(87) International Publication No :WO 2013/019325
(61) Patent of Addition to Application Number :NA
Filing Date :NA
(62) Divisional to Application Number :NA
Filing Date :NA

(71)**Name of Applicant :**
1)EATON CORPORATION
Address of Applicant :1000 Eaton Boulevard, Cleveland, Ohio 44122, U.S.A.
(72)**Name of Inventor :**
1)ROSENKRANS, Benjamin A.
2)LI, Wangpei

(57) Abstract :
A vacuum switch (2;30;50) includes a vacuum envelope (4); a fixed contact assembly (6) partially within the vacuum envelope; and a movable contact assembly (7) partially within the vacuum envelope and movable between a closed position in electrical contact with the fixed contact assembly and an open position spaced apart from the fixed contact assembly. The vacuum envelope includes an insulating body (5) having a number of transparent portions (8) made of a single crystal alumina (A12O3) for viewing the fixed contact assembly and the movable contact assembly within the vacuum envelope.

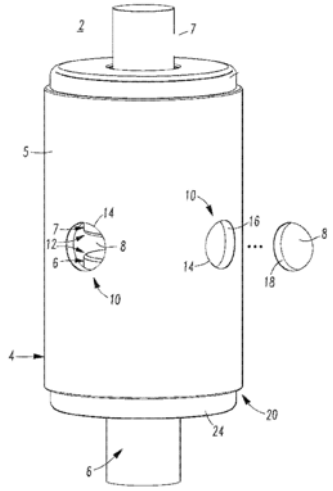

No. of Pages : 16 No. of Claims : 15

(12) PATENT APPLICATION PUBLICATION
(19) INDIA
(22) Date of filing of Application :24/01/2014
(21) Application No.105/KOL/2014 A
(43) Publication Date : 14/03/2014

(54) Title of the invention : THE AGENT FOR CURING XEROPHTHALMIA SYNDROME

(51) International classification :A61K 31/00
(31) Priority Document No :07-263896
(32) Priority Date :12/10/1995
(33) Name of priority country :Japan
(86) International Application No :NA
Filing Date :NA
(87) International Publication No : NA
(61) Patent of Addition to Application Number :NA
Filing Date :NA
(62) Divisional to Application Number :1696/CAL/1996
Filed on :25/09/1996

(71)**Name of Applicant :**
1)OTSUKA PHARMACEUTICAL CO., LTD.
Address of Applicant :2-9, KANDA-TSUKASACHO, CHIYODA-KU,TOKYO Japan
(72)**Name of Inventor :**
1)HIROKI URASHIMA
2)YASUHIRO TAKEJI
3)HISASHI SHINOHARA
4)SHIGEKI FUJISAWA

(57) Abstract :
Method for treating ophthalmologicai diseases by using an agent for curing ophthalmological diseases which contains, as the active ingredient, a carbostyril derivative or salt thereof represented by the general formula (I), (wherein R is a halogen atom, the substituted position of the side-chain of the formula is 3- or 4- position in the carbostyril skeleton, and the carbon-carbon bond between 3- and 4-positions in the carbostyril skeleton is a single bond or a double bond).

No. of Pages : 47 No. of Claims : 20

(12) PATENT APPLICATION PUBLICATION
(19) INDIA
(22) Date of filing of Application :28/11/2013
(21) Application No.3486/KOLNP/2013 A
(43) Publication Date : 14/03/2014

(54) Title of the invention : METHOD FOR APPLYING A DATA MARKING TO THE SURFACE OF A DIAMOND OR BRILLIANT AND FOR DETERMINING THE AUTHENTICITY THEREOF

(51) International classification :B23K26/00
(31) Priority Document No :NA
(32) Priority Date :NA
(33) Name of priority country :NA
(86) International Application No :PCT/EP2011/003749
Filing Date :27/07/2011
(87) International Publication No :WO 2013/013685
(61) Patent of Addition to Application Number :NA
Filing Date :NA
(62) Divisional to Application Number :NA
Filing Date :NA

(71)**Name of Applicant :**
1)POTEMKIN,Alexander
Address of Applicant :Zum Ehrenhain 15, 22885 Barsbüttel GERMANY
2)LUSKINOVICH,Petr Nikolaevich
3)ZHABOTINSKY,Vladimir,Alexandrovich
(72)**Name of Inventor :**
1)POTEMKIN,Alexander
2)LUSKINOVICH,Petr Nikolaevich
3)ZHABOTINSKY,Vladimir,Alexandrovich

(57) Abstract :
The invention relates to a system having means for marking valuable articles particularly precious stones and here in particular cut diamonds (brilliants) and uncut diamonds. The identification marking is stored specifically electronically or added to a certificate of the diamond or brilliant. The identification marking renders subsequent identification possible. The aim of said inventions is to ensure uniqueness of the marking protection the same against forgery and reliably identify the same during testing for authenticity. Said aim is preferably achieved in that as the identification marking that is invisible to the naked eye is applied the respective surface of the diamond or brilliant is irradiated with laser light of less than 400 nm wavelength and simultaneously in succession or intermittently exposed to the action of ultrasound and laser light having a wavelength of more than 500 nm. The result is achieved in that on determination of the authenticity of the identification marking a method is used in which several interference images of the marking are recorded at different wavelengths of the sounding rays after the marking has been applied. During the identification interference images of the identification marking are recorded again at the same wavelengths and are compared with the stored interference images; if the images match it can be assumed that the identification marking is genuine.

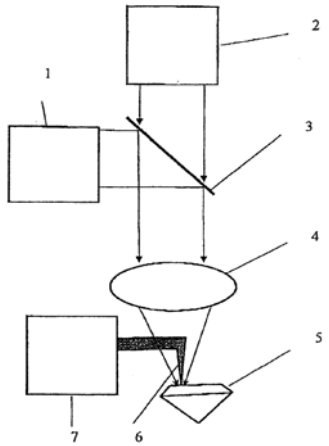

No. of Pages : 17 No. of Claims : 4

(12) PATENT APPLICATION PUBLICATION
(19) INDIA
(22) Date of filing of Application :15/01/2014
(21) Application No.80/KOLNP/2014 A
(43) Publication Date : 14/03/2014

(54) Title of the invention : FILTER DEVICE

(51) International classification :B01D29/11,B01D29/52,B01D29/66
(31) Priority Document No :10 2011 111 457.6
(32) Priority Date :30/08/2011
(33) Name of priority country:Germany
(86) International Application No :PCT/EP2012/003547
Filing Date :22/08/2012
(87) International Publication No :WO 2013/029761
(61) Patent of Addition to Application Number :NA
Filing Date :NA
(62) Divisional to Application Number :NA
Filing Date :NA

(71)**Name of Applicant :**
1)HYDAC PROCESS TECHNOLOGY GMBH
Address of Applicant :Industriegebiet,Grube König, Am Wrangelflöz 1, 66538 Neukirchen,GERMANY
(72)**Name of Inventor :**
1)SCHLICHTER,Bernhard
2)WNUK,Ralf
3)GESSNER,Christian
4)KAINTS,Albert

(57) Abstract :
A filter device having a plurality of filter elements (23) that can be received in a filter housing (1) having a filter inlet (19) for a fluid that is to be filtered and a filter outlet (21) for the filtered fluid, wherein flow can pass through the filter elements (23) for a filtration or backwash in both directions and wherein at the same time at least one filter element (23) performs the filtration and at least one other filter element (23), for cleaning off the active filter surface thereof, can be backwashed by means of a backwash appliance which, for supporting the backwashing, contains a pressure control appliance (43) which has a pressure control element (45) by means of which, during a backwash operation, the fluid flow is controllable in a fluid connection between filter inlet (19) and the filter element (23) that is to be cleaned off, is characterized in that the fluid connection has a connection space (29) having element openings (27) each of which can be connected to an open end of the filter cavity forming the unfiltered side of each filter element (23), in that a fluid pathway (27) is provided via which, during the filtration, unfiltrate flows into the connection space (29) and in that, by means of the pressure control element (45), the flow of unfiltrate through the element opening (27) associated with the filter element (23) that is to be cleaned off can be controlled.

No. of Pages : 24 No. of Claims : 14

(12) PATENT APPLICATION PUBLICATION
(19) INDIA
(22) Date of filing of Application :10/01/2014
(21) Application No.53/KOLNP/2014 A
(43) Publication Date : 14/03/2014

(54) Title of the invention : INTEGRATED CARTRIDGE FOR EXTRACTING A BEVERAGE FROM A PARTICULATE SUBSTANCE

(51) International classification :B65D 85/00
(31) Priority Document No :04007294.4
(32) Priority Date :26/03/2004
(33) Name of priority country :EPO
(86) International Application No :PCT/EP2005/003037
Filing Date :22/03/2005
(87) International Publication No :WO/2005/092160
(61) Patent of Addition to Application Number :NA
Filing Date :NA
(62) Divisional to Application Number :2538/KOLNP/2006
Filed on :05/09/2006

(71)**Name of Applicant :**
1)ILLYCAFFE' S.P.A.
Address of Applicant :Via Flavia, 110, 34147 TRIESTE, ITALY
(72)**Name of Inventor :**
1)Furio SUGGI LIVERANI
2)Luca MASTROPASQUA
3)Frans VAN EEDEN
4)Bruno DELLAPIETRA

(57) Abstract :
A cartridge (1) for extracting a beverage from a particulate substance (4) contained therein by means of water under pressure, the cartridge comprising: a main body comprising a cup portion (2) and a lid portion (3), the cup portion (2) comprising a base (7), a sidewall (8) and a rim (9a) opposed to the base (7), the lid portion (3) being fixedly attached to the rim (9a) of the cup portion so as to define an internal volume of the cartridge, the internal volume of the cartridge housing the particulate substance (4) comprised within filtering means (5a,5b) for retaining the particulate substance (4) and for percolating fluid substances therethrough, the lid portion (3) comprising a lid port (6b) defining a first passage for percolation fluid substances, the base (7) of the cup portion (2) comprising a cup port (6a) defining a second passage for percolation fluid substances, characterized in. that the base comprises a plurality of ridges (101a) directly formed thereon and protruding towards the internal volume of the cartridge (1), so as to support the filtering means (5a) and the particulate substance (4) and to define a fine canalization between the filtering means (5a) and the cup port (6a).

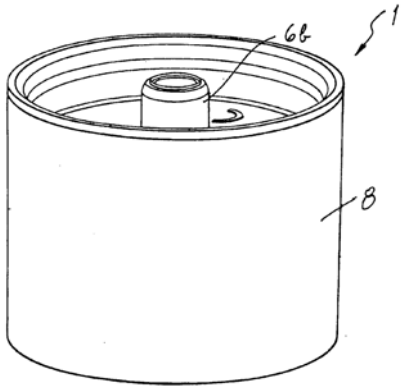

No. of Pages : 71 No. of Claims : 16

(12) PATENT APPLICATION PUBLICATION
(19) INDIA
(22) Date of filing of Application :15/01/2014

(21) Application No.79/KOLNP/2014 A
(43) Publication Date : 14/03/2014

(54) Title of the invention : LOCKING DEVICE FOR A DRIVE UNIT OF A THREE-POSITION DRIVE MECHANISM FOR A CONNECTION DEVICE OF SWITCHING ASSEMBLY

(51) International classification :H01H3/40,H01H9/24,H01H9/16
(31) Priority Document No :11006068.8
(32) Priority Date :25/07/2011
(33) Name of priority country :EPO
(86) International Application No :PCT/EP2012/002889
Filing Date :09/07/2012
(87) International Publication No:WO 2013/013775
(61) Patent of Addition to Application Number :NA
Filing Date :NA
(62) Divisional to Application Number :NA
Filing Date :NA

(71)**Name of Applicant :**
1)ABB TECHNOLOGY AG
Address of Applicant :Affolternstr. 44, CH-8050 Zürich,SWITZERLAND
(72)**Name of Inventor :**
1)BREISCH,Sebastian
2)LOHRBERG,Henrik
3)KÖRBER,Franz-Josef

(57) Abstract :
The invention relates to a locking device for a drive unit for actuating a connection device of a switching assembly, said locking device comprising a spindle drive for actuating the connection device and a gear mechanism which is coupled therein, and can be driven by a drive motor or a manually controlled device and after a defined number of partial rotations of a drive shaft, connected to the gear mechanism, of the spindle arrangement, the connection device locks such that said connection device is brought into one of three predetermined locking positions and said position is displayed by means of at least one provided position display module. The gear mechanism comprises two mutually engaged toothed wheels (130,140) having a defined transmission ratio each toothed wheel (130,140) interacting respectively with three thus connected locking disks (131, 132, 133, 134, 135, 136) and each locking position can be transmitted to a shift rod (10.1, 10.2, 10.3) arranged therein by respectively one of the three locking elements (210, 220, 230) which engage with pairs of locking disks (131, 132; 133, 134; 135, 136) associated with the locking elements (210, 220 230), in order to display the shift position on the position display module.

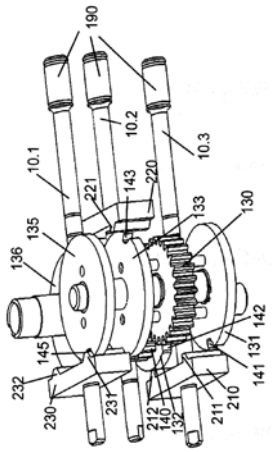

No. of Pages : 27 No. of Claims : 10

(12) PATENT APPLICATION PUBLICATION
(19) INDIA
(22) Date of filing of Application :15/01/2014

(21) Application No.88/KOLNP/2014 A
(43) Publication Date : 14/03/2014

(54) Title of the invention : WATER TREATMENT SYSTEM FOR SIMULTANEOUS NITRIFICATION AND DENITRIFICATION

(51) International classification :C02F1/58,C02F1/72,B01D15/00
(31) Priority Document No :61/497,482
(32) Priority Date :15/06/2011
(33) Name of priority country :U.S.A.
(86) International Application No :PCT/US2012/000206
Filing Date :17/04/2012
(87) International Publication No:WO 2012/173653
(61) Patent of Addition to Application Number :NA
Filing Date :NA
(62) Divisional to Application Number :NA
Filing Date :NA

(71)**Name of Applicant :**
1)SMITH,Dean
Address of Applicant :25 Via Magnolia, Thousand Oaks,CA 91320 U.S.A.
2)LYSENSTOEN,Ola
3)TOPE-MCKAY,Cary
4)GORIAN,Gary
(72)**Name of Inventor :**
1)SMITH,Dean
2)LYSENSTOEN,Ola
3)TOPE-MCKAY,Cary
4)GORIAN,Gary

(57) Abstract :
Described herein is a water treatment system for simultaneously removing ammonia and nitrates from a liquid. The water treatment system comprises a nitrifying volume for nitrification of a liquid and a denitrifying volume for denitrification of the liquid. One of the nitrifying volume and the denitrifying volume resides substantially within the other of the nitrifying volume and the denitrifying volume, and the nitrifying volume and the denitrifying volume are in fluid communication. In one aspect, the nitrifying volume is a relatively oxygenated region and the denitrifying volume is a relatively oxygen-depleted region. In another aspect, the nitrifying volume is in communication with an oxygen-supplying source for providing oxygen to create the relatively oxygenated region.

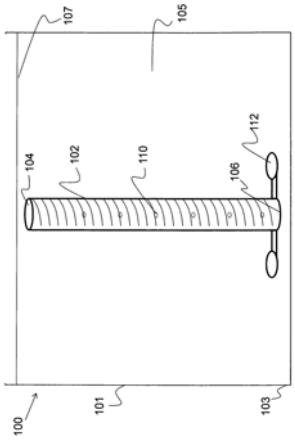

No. of Pages : 44 No. of Claims : 20

(12) PATENT APPLICATION PUBLICATION
(19) INDIA
(22) Date of filing of Application :17/12/2013
(21) Application No.3739/KOLNP/2013 A
(43) Publication Date : 14/03/2014

(54) Title of the invention : MIXED OXIDE CATALYSTS FOR THE CATALYTIC GAS-PHASE OXIDATION OF OLEFINS AND PROCESSES FOR PRODUCING THEM

(51) International classification :B01J21/06
(31) Priority Document No :10 2005 049 717.9
(32) Priority Date :14/10/2005
(33) Name of priority country :Germany
(86) International Application No :PCT/EP2006/066411
Filing Date :15/09/2006
(87) International Publication No :WO/2007/042369
(61) Patent of Addition to Application Number :NA
Filing Date :NA
(62) Divisional to Application Number :1455/KOLNP/2008
Filed on :10/04/2008

(71)**Name of Applicant :**
1)EVONIK DEGUSSA GMBH
Address of Applicant :RELLINGHAUSER STRAβE 1-11, 45128 ESSEN, GERMANY
(72)**Name of Inventor :**
1)FISCHER, ACHIM
2)BURKHARDT, WERNER
3)WECKBECKER, CHRISTOPH
4)HUTHMACHER, KLAUS
5)WILZ, FRANK

(57) Abstract :
The invention relates to mixed oxide catalysts for the catalytic gas-phase oxidation of olefins and methylated aromatics, processes for producing the catalysts and the reaction with air or oxygen in the presence of inert gases in various ratios at elevated temperatures and pressure to form aldehydes and carboxylic acids.

No. of Pages : 23 No. of Claims : 5

(12) PATENT APPLICATION PUBLICATION
(19) INDIA
(22) Date of filing of Application :13/01/2014

(21) Application No.63/KOLNP/2014 A
(43) Publication Date : 14/03/2014

(54) Title of the invention : VEHICLE WITH SIDE WALL SPEAKERS

(51) International classification :H04R3/12,H04R5/02,B60R11/02
(31) Priority Document No :61/512,523
(32) Priority Date :28/07/2011
(33) Name of priority country :U.S.A.
(86) International Application No :PCT/EP2012/063002
Filing Date :04/07/2012
(87) International Publication No :WO 2013/013943
(61) Patent of Addition to Application Number :NA
Filing Date :NA
(62) Divisional to Application Number :NA
Filing Date :NA

(71)**Name of Applicant :**
1)FRAUNHOFER-GESELLSCHAFT ZUR FOERDERUNG DER ANGEWANDTEN FORSCHUNG E.V.
Address of Applicant :Hansastrasse 27c, 80686 München, GERMANY
(72)**Name of Inventor :**
1)SILZLE, Andreas
2)HELLMUTH, Oliver
3)HEISE, Ulrik
4)FINAUER, Stefan (new address)
5)STOECKLMEIER, Christian

(57) Abstract :
A vehicle comprises a side wall, a ceiling and a speaker arrangement comprising at least one speaker. The speaker arrangement is positioned in or at the side wall and is configured such that a main sound emission direction of the speaker arrangement is directed to the ceiling.

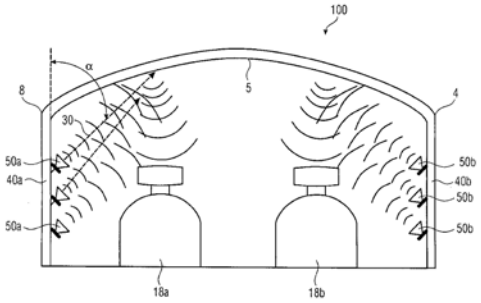

No. of Pages : 28 No. of Claims : 19

(12) PATENT APPLICATION PUBLICATION
(19) INDIA
(22) Date of filing of Application :15/01/2014

(21) Application No.84/KOLNP/2014 A
(43) Publication Date : 14/03/2014

(54) Title of the invention : PROCESS AND APPARATUS FOR REMOVAL OF VOLATILE DEGRADATION PRODUCTS FROM THE ABSORPTION CIRCUIT OF A CO2 SEPARATION PROCESS

(51) International classification :B01D53/78,B01D53/96
(31) Priority Document No :11177910.4
(32) Priority Date :18/08/2011
(33) Name of priority country :EPO
(86) International Application No :PCT/EP2012/065029
Filing Date :01/08/2012
(87) International Publication No :WO 2013/023918
(61) Patent of Addition to Application Number :NA
Filing Date :NA
(62) Divisional to Application Number :NA
Filing Date :NA

(71)**Name of Applicant :**
1)SIEMENS AKTIENGESELLSCHAFT
Address of Applicant :Wittelsbacherplatz 2, 80333 MÜnchen,GERMANY
(72)**Name of Inventor :**
1)FISCHER Björn
2)KUETTEL Diego Andres
3)GILING Erwin Johannes Martinus
4)GOETHEER Earl Lawrence Vincent
5)JOH Ralph
6)KINZL Markus
7)SCHNEIDER Rüdiger
8)URBANUS Jan Harm

(57) Abstract :
The invention relates to a method for extracting highly volatile degradation products (7) from the absorbent loop (1) of a CO2 separation process (2). The CO separation process (2) comprises the absorbent loop (1) that includes an absorption process (3) and a desorption process (4). According to the invention, condensate (6) is removed from a condensing process (5) taking place downstream of the desorption process (4) and is largely purified from degradation products (7). The obtained purified condensate (8) is recirculated into the absorbent loop(1). The invention further relates to a device with which the method of the invention can be carried out.

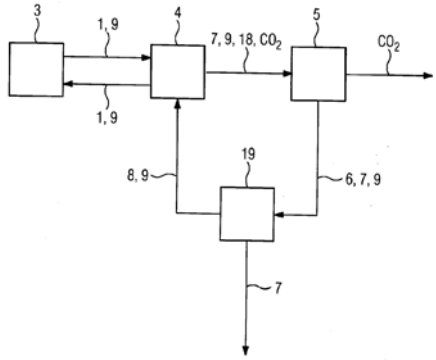

No. of Pages : 14 No. of Claims : 7

(12) PATENT APPLICATION PUBLICATION
(19) INDIA
(22) Date of filing of Application :16/01/2014
(21) Application No.96/KOLNP/2014 A
(43) Publication Date : 14/03/2014

(54) Title of the invention : A GASOLINE COMPOSITION AND ITS PREPARATION METHOD

(51) International classification :C10L1/19,C10L10/10,C10L10/18
(31) Priority Document No :NA
(32) Priority Date :NA
(33) Name of priority country :NA
(86) International Application No :PCT/CN2011/078538
Filing Date :17/08/2011
(87) International Publication No :WO 2013/023372
(61) Patent of Addition to Application Number :NA
Filing Date :NA
(62) Divisional to Application Number :NA
Filing Date :NA

(71)**Name of Applicant :**
1)HUNAN ZHONGCHUANG CHEMICAL CO., LTD.
Address of Applicant :Jimei Village, Changlian Refinery, Yunxi District, Yueyang, Hunan 414012, CHINA
(72)**Name of Inventor :**
1)HU, Xiannian
2)LI, Hua
3)LIU, Liangshuai

(57) Abstract :
Disclosed are a gasoline composition and its preparation method. Said gasoline composition comprises raw gasoline and acetic acid secbutyl ester, in terms of the total weight of the gasoline composition, with the contents of acetic acid secbutyl ester being 1-30 weight%, contents of the raw gasoline being 70-99 weight%. The preparation method of the gasoline composition comprises the step of adding acetic acid secbutyl ester into raw gasoline.

No. of Pages : 31 No. of Claims : 12

(12) PATENT APPLICATION PUBLICATION
(19) INDIA
(22) Date of filing of Application :16/01/2014
(21) Application No.99/KOLNP/2014 A
(43) Publication Date : 14/03/2014

(54) Title of the invention : CASSETTES AND METHODS FOR TRANSFORMING AND SELECTING YEAST TRANSFORMANTS BY HOMOLOGOUS RECOMBINATION

(51) International classification	:C12N15/64,C12N15/81,C12N15/90
(31) Priority Document No	:NA
(32) Priority Date	:NA
(33) Name of priority country	:NA
(86) International Application No	:PCT/IB2011/002254
Filing Date	:20/06/2011
(87) International Publication No	:WO 2012/176016
(61) Patent of Addition to Application Number	:NA
Filing Date	:NA
(62) Divisional to Application Number	:NA
Filing Date	:NA

(71)**Name of Applicant :**
1)AMIKANA BIOLOGICS
Address of Applicant :Faculté de Médecine, 27 Boulevard Jean Moulin, F-13385 Marseille Cedex 5 FRANCE
(72)**Name of Inventor :**
1)PERRIN-EAST, Christèle
2)GLUSCHANKOF, Pablo

(57) Abstract :
The invention relates to a method for selecting a transformed yeast cell having integrated a nucleic acid fragment of interest by homologous recombination said method comprising the steps of: (i) Contacting a yeast cell with: The vector comprising: a positive selection gene, o a homologous recombination site comprising a 51 and a 31 recombination regions framing a restriction site, and A nucleic acid fragment of interest to insert by homologous recombination into the homologous recombination site of said vector, said nucleic acid fragment being flanked by regions substantially identical to the 51 and 31 recombination regions of the homologous recombination site, and (ii) Transforming said yeast cell with said vector and said nucleic acid fragment of interest, (iii) Selecting yeast cells harboring said vector with said positive selection gene, Characterized in that: A negative selection gene is further present in the vector downstream to the homologous recombination site and under the control of a promoter situated upstream to said homologous recombination site, said promoter and negative selection gene being operably linked in said vector before insertion of the DNA fragment of interest, and 25 (iv) The method further comprises a step of selecting yeast cells harboring the DNA fragment of interest using the negative selection gene. The invention further provides cassettes and kits for carrying out the method of the invention.

No. of Pages : 31 No. of Claims : 15

(12) PATENT APPLICATION PUBLICATION
(19) INDIA
(22) Date of filing of Application :20/12/2013
(21) Application No.3793/KOLNP/2013 A
(43) Publication Date : 14/03/2014

(54) Title of the invention : NOVEL PROCESSES FOR THE PREPARATION OF CYCLOPRPOPYL-AMIDE DERIVATIVES

(51) International classification :A61K31/4245
(31) Priority Document No :60/731,725
(32) Priority Date :31/10/2005
(33) Name of priority country :U.S.A.
(86) International Application No :PCT/US2006/041590
Filing Date :21/10/2006
(87) International Publication No :WO/2007/053386
(61) Patent of Addition to Application Number :NA
Filing Date :NA
(62) Divisional to Application Number :1506/KOLNP/2008
Filed on :15/04/2008

(71)**Name of Applicant :**
1)JANSSEN PHARMACEUTICA, N.V.
Address of Applicant :TURNHOUTSEWEG 30, B-2340 BEERSE, BELGIUM
(72)**Name of Inventor :**
1)NEELAKANDHA S. MANI
2)DAVID C. PALMER
3)CHENNAGIRI R. PANDIT
4)MAYRA B. REYES
5)TONG XIAO
6)SERGIO CESCO-CANCIAN

(57) Abstract :
The present invention is directed to novel processes for the preparation of cyclopropyl-amide derivatives, useful for the treatment of disorders and conditions mediated by the histamine receptor.

No. of Pages : 81 No. of Claims : 23

(12) PATENT APPLICATION PUBLICATION
(19) INDIA
(22) Date of filing of Application :13/01/2014

(21) Application No.61/KOLNP/2014 A
(43) Publication Date : 14/03/2014

(54) Title of the invention : UNDIVIDED ELECTROLYTIC CELL AND USE OF THE SAME

(51) International classification :C25B1/28,C25B9/06
(31) Priority Document No :11173916.5
(32) Priority Date :14/07/2011
(33) Name of priority country :EPO
(86) International Application No :PCT/EP2012/063783
Filing Date :13/07/2012
(87) International Publication No :WO 2013/007816
(61) Patent of Addition to Application Number :NA
Filing Date :NA
(62) Divisional to Application Number :NA
Filing Date :NA

(71)**Name of Applicant :**
1)UNITED INITIATORS GMBH & CO. KG
Address of Applicant :Dr.-Gustav-Adolph-Str. 3, 82049 Pullach, GERMANY
(72)**Name of Inventor :**
1)MÜLLER, Michael
2)KELLER, Patrick
3)SCHIERMEIER, Markus

(57) Abstract :
The invention relates to a method for producing an ammonium peroxydisulfate or alkali metal peroxydisulfate, to an undivided electrolytic cell which is composed of individual components, and to an electrolytic device composed of a plurality of said electrolytic cells.

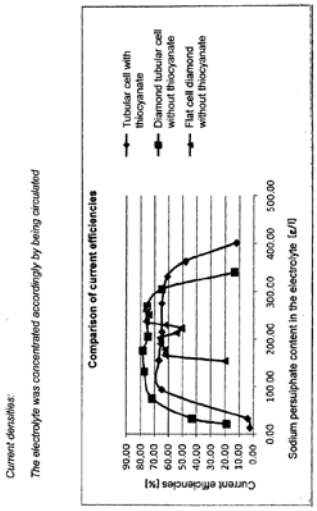

No. of Pages : 39 No. of Claims : 38

(12) PATENT APPLICATION PUBLICATION
(19) INDIA
(22) Date of filing of Application :29/07/2013

(21) Application No.898/KOL/2013 A
(43) Publication Date : 14/03/2014

(54) Title of the invention : CLEANING DEVICE FOR THE CLEANING OF SPRAY GUNS

(51) International classification	:B08B 9/00	(71)**Name of Applicant :**
(31) Priority Document No	:20 2012 008 555.7	**1)SATA GMBH & CO. KG** Address of Applicant :DOMERTALSTRASSE 20, 70806 KORNWESTHEIM, GERMANY
(32) Priority Date	:07/09/2012	(72)**Name of Inventor :**
(33) Name of priority country	:Germany	**1)TSCHAN, ALEXANDER**
(86) International Application No	:NA	
Filing Date	:NA	
(87) International Publication No	: NA	
(61) Patent of Addition to Application Number	:NA	
Filing Date	:NA	
(62) Divisional to Application Number	:NA	
Filing Date	:NA	

(57) Abstract :
Cleaning device for cleaning spray guns (S), in particular paint spray guns, with at least one cleaning device (3) for manual cleaning of the spray gun (S) or the parts thereof, and with at least one cleaning nozzle (1), which stays connected with a conveyor system (2) for cleaning liquid, and with a first container (4) for clean cleaning liquid, whereby the cleaning device (3) and the conveyor system (2) are kept in a housing (6) and are inter-connected by a pipeline (16) for the cleaning liquid, which runs through an opening (27) in the housing (6) to the container (4), and with a second container (5) for receiving contaminated cleaning liquid, characterized by the fact that the containers (4, 5) are located outside of the housing (6).

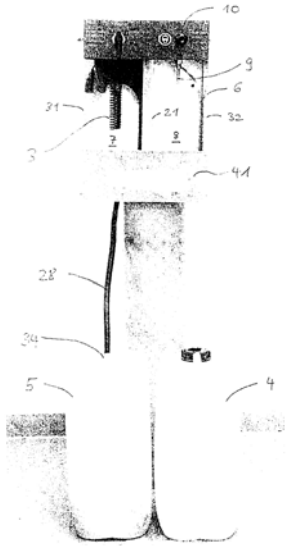

No. of Pages : 20 No. of Claims : 15

(12) PATENT APPLICATION PUBLICATION
(19) INDIA
(22) Date of filing of Application :13/01/2014
(21) Application No.64/KOLNP/2014 A
(43) Publication Date : 14/03/2014

(54) Title of the invention : COOLING DEVICE WITH WICK-LIKE MATERIAL FOR THE TRANSPORT OF COOLANT

(51) International classification :F25D19/00,H02K55/04,H01F6/04
(31) Priority Document No :10 2011 079 968.0
(32) Priority Date :28/07/2011
(33) Name of priority country :Germany
(86) International Application No :PCT/EP2012/064463
Filing Date :24/07/2012
(87) International Publication No :WO 2013/014141
(61) Patent of Addition to Application Number :NA
Filing Date :NA
(62) Divisional to Application Number :NA
Filing Date :NA

(71)**Name of Applicant :**
1)SIEMENS AKTIENGESELLSCHAFT
Address of Applicant :Wittelsbacherplatz 2, 80333 München, GERMANY
(72)**Name of Inventor :**
1)GRUNDMANN, Jörn
2)KUMMETH, Peter
3)NICK, Wolfgang
4)VAN HASSELT, Peter

(57) Abstract :
A cooling device (1, 1, 1) comprising a condenser (4), especially coupled to a cold head (5), for liquefaction of gaseous coolant, a vaporizer (8) for vaporization of liquid coolant (3) for cooling of an object (9) to be cooled, and a heat tube (7) for transport of the coolant (3) between the vaporizer (8) and the condenser (4), wherein the liquid coolant (3) is transported on the basis of the capillary effect using a wick-like material structure (11) and a rotation device (13) is provided for rotation of the material structure (11) about an axis of rotation lying in the direction of transport of the liquid coolant (3) through the heat tube (7).

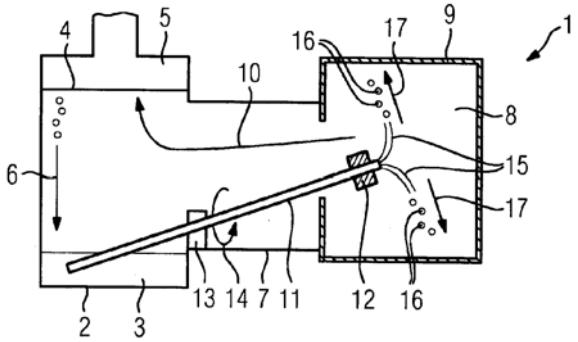

No. of Pages : 15 No. of Claims : 10

(12) PATENT APPLICATION PUBLICATION
(19) INDIA
(22) Date of filing of Application :16/01/2014

(21) Application No.98/KOLNP/2014 A
(43) Publication Date : 14/03/2014

(54) Title of the invention : AN IL-15 AND IL-15Rα SUSHI DOMAIN BASED IMMUNOCYTOKINES

(51) International classification :C12N15/62,C07K14/54,C07K14/715
(31) Priority Document No :11358005.4
(32) Priority Date :24/06/2011
(33) Name of priority country :EPO
(86) International Application No :PCT/EP2012/002650
Filing Date :22/06/2012
(87) International Publication No :WO 2012/175222
(61) Patent of Addition to Application Number :NA
Filing Date :NA
(62) Divisional to Application Number :NA
Filing Date :NA

(71)**Name of Applicant :**
1)CYTUNE
Address of Applicant :7 Rue Amedee Menard, 44325 Nantes Cedex 3 FRANCE
2)INSERM
(72)**Name of Inventor :**
1)MORISSEAU, Sébastien Daniel
2)TEPPAZ, Géraldine
3)JACQUES, Yannick, Laurent, Joseph
4)ROBERT, Bruno, Gilbert, Marc
5)DE MARTYNOFF, Guy, Luc, Michel
6)BECHARD, David

(57) Abstract :
The present invention relates to an immunocytokine comprising (a) a conjugate, and (b) an antibody or a fragment thereof directly or indirectly linked by covalence to said conjugate, wherein said conjugate comprises (i) a polypeptide comprising the amino acid sequence of the interleukin 15 or derivatives thereof, and a polypeptide comprising the amino acid sequence of the sushi domain of the IL-15Rα or derivatives thereof; and uses thereof.

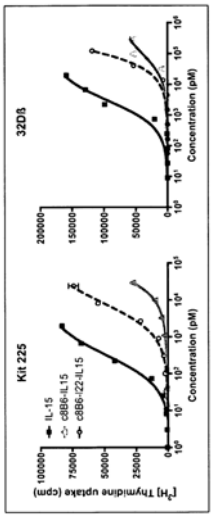

No. of Pages : 75 No. of Claims : 16

(12) PATENT APPLICATION PUBLICATION
(19) INDIA
(22) Date of filing of Application :12/12/2013

(21) Application No.3642/KOLNP/2013 A
(43) Publication Date : 14/03/2014

(54) Title of the invention : ELECTRIC MACHINE HAVING A LOW-MASS DESIGN IN MAGNETICALLY ACTIVE PARTS

(51) International classification :H02K7/00
(31) Priority Document No :10 2011 079 843.9
(32) Priority Date :26/07/2011
(33) Name of priority country :Germany
(86) International Application No :PCT/EP2012/064338
Filing Date :20/07/2012
(87) International Publication No :WO 2013/014103
(61) Patent of Addition to Application Number :NA
Filing Date :NA
(62) Divisional to Application Number :NA
Filing Date :NA

(71)**Name of Applicant :**
1)SIEMENS AKTIENGESELLSCHAFT
Address of Applicant :Wittelsbacherplatz 2, 80333 München GERMANY
(72)**Name of Inventor :**
1)Zeljko JAJTIC,
2)Gerhard MATSCHEKO,

(57) Abstract :
The invention relates to an electric machine, comprising a first magnetic pole (2), which comprises an arrangement of layers that comprises magnetically active layers (3) having a total volume Va, a second magnetic pole (4), wherein the first magnetic pole (2) and the second magnetic pole (4) can be moved relative to each other, and a gap (5), which has a length ls in a direction parallel to one of the layers from an end of the first magnetic pole (2) bounding the gap (5) to an end of the second magnetic pole (4) bounding the gap (5), an electrical conductor (6) as a coupling element between an electrical circuit (7) and a magnetic circuit (8), wherein at an operating time the magnetic circuit (8) comprises the first magnetic pole (2), the gap (5) having the length ls, and the second magnetic pole (4), through which a common useful magnetic flux for electromechanical energy conversion flows, wherein the arrangement comprises magnetically inactive layers (9) having a total volume Vi, which have a lower average density than the magnetically active layers (3), and a sequence in the arrangement of the magnetically inactive layers (9) and the magnetically active layers (3) is specified substantially by a repetition of a period p, which has a defined order of magnetically active layers (3) and magnetically inactive layers (9), wherein a spatial component k fulfills the condition $0.5 \leq k \leq 0.8$. The invention further relates to a magnetic pole part, to a vehicle, to a wind turbine, and to a method for producing an electric machine.

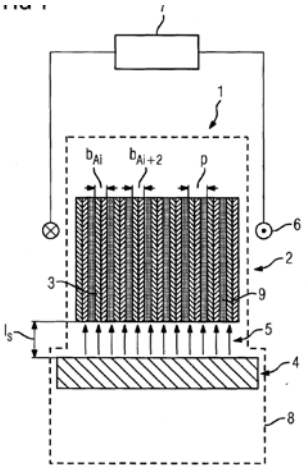

No. of Pages : 47 No. of Claims : 16

(12) PATENT APPLICATION PUBLICATION
(19) INDIA
(22) Date of filing of Application :15/01/2014

(21) Application No.82/KOLNP/2014 A
(43) Publication Date : 14/03/2014

(54) Title of the invention : BRAKING SYSTEM

(51) International classification :B60T13/66
(31) Priority Document No :1111366.9
(32) Priority Date :04/07/2011
(33) Name of priority country :U.K.
(86) International Application No :PCT/GB2012/000570
Filing Date :04/07/2012
(87) International Publication No :WO 2013/004993
(61) Patent of Addition to Application Number :NA
Filing Date :NA
(62) Divisional to Application Number :NA
Filing Date :NA

(71)**Name of Applicant :**
1)KNORR-BREMSE RAIL SYSTEMS (UK) LIMITED
Address of Applicant :Westinghouse Way, Hampton Park East, Melksham,SN12 6TL, Wiltshire, U.K.
(72)**Name of Inventor :**
1)BRADLEY,Ross
2)ANSTEY,Nigel

(57) Abstract :
A brake control unit (11) for a railway vehicle is provided with first (12) and second cores (13). The first core (12) is responsible for brake control functions and the second core (13) is responsible for communications. A switch (16) controls communication between the second core and a communication bus on the railway vehicle so as to safeguard the braking function of the first core. The second core only has write access to the communication bus when enabled by the first core, which first core determines whether the system is in a defined safe state to thereby safeguard the braking function. This reduces the testing requirements for new communications software.

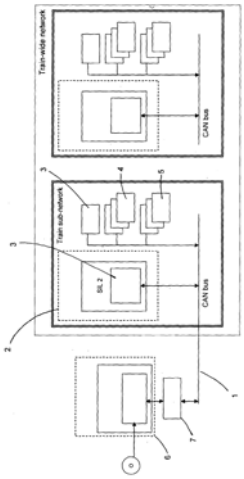

No. of Pages : 9 No. of Claims : 5

(12) PATENT APPLICATION PUBLICATION
(19) INDIA
(22) Date of filing of Application :15/01/2014

(21) Application No.85/KOLNP/2014 A
(43) Publication Date : 14/03/2014

(54) Title of the invention : COVERING ELEMENT FOR FORMING FLOOR AND/OR WALL COVERINGS

(51) International classification :E04F15/02,E04F15/08
(31) Priority Document No :10 2011 078 160.9
(32) Priority Date :28/06/2011
(33) Name of priority country :Germany
(86) International Application No :PCT/DE2012/100102
Filing Date :12/04/2012
(87) International Publication No :WO 2013/000456
(61) Patent of Addition to Application Number :NA
Filing Date :NA
(62) Divisional to Application Number :NA
Filing Date :NA

(71)**Name of Applicant :**
1)ARSRATIO HOLDING GMBH
Address of Applicant :Grabenweg 68, A-6020 Innsbruck, Austria
(72)**Name of Inventor :**
1)PERMESANG,Claus

(57) Abstract :
The invention relates to a covering element for forming floor and/or wall coverings, comprising connecting links(5,6), which protrude from two edges of the covering element that are perpendicular to one another and flush with the contact face thereof, and stepped recesses (7,8) on the edges opposite the said two edges for receiving the connecting links (5,6) of such covering elements adjacent to the covering element in the floor and/or wall covering, which stepped recesses correspond to the connecting links (5,6). The covering element also has devices for fixing the connecting links in the stepped recesses (7,8) receiving the connecting links (5,6). According to the invention, the protruding length of the connecting links (5,6) is larger than the thickness of the covering element. In one embodiment, the protruding length of the connecting links amounts to a multiple of the thickness of the covering element.

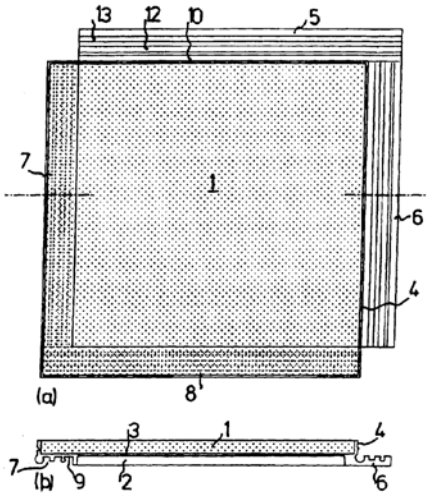

No. of Pages : 21 No. of Claims : 14

(12) PATENT APPLICATION PUBLICATION
(19) INDIA
(22) Date of filing of Application :10/01/2014

(21) Application No.52/KOLNP/2014 A
(43) Publication Date : 14/03/2014

(54) Title of the invention : METHOD AND APPARATUS FOR CONTROLLING CONTENT USING GRAPHICAL OBJECT

(51) International classification :G06F3/048,G06F3/14,G06F15/16
(31) Priority Document No :10-2011-0068378
(32) Priority Date :11/07/2011
(33) Name of priority country :Republic of Korea
(86) International Application No :PCT/KR2012/005498
Filing Date :11/07/2012
(87) International Publication No :WO 2013/009092
(61) Patent of Addition to Application Number :NA
Filing Date :NA
(62) Divisional to Application Number :NA
Filing Date :NA

(71)**Name of Applicant :**
1)SAMSUNG ELECTRONICS CO., LTD.
Address of Applicant :129, Samsung-ro, Yeongtong-gu, Suwon-si, Gyeonggi-do, 443-742, REPUBLIC OF KOREA
(72)**Name of Inventor :**
1)Taik Heon RHEE
2)Sang Il LEE
3)Dong Jin EUN
4)Sung Bin KUK

(57) Abstract :
A method and apparatus for controlling content using a graphical object in a mobile terminal are provided, in which the user may create a graphical object on the screen through touch input and easily apply various actions such as copy, delete, move, transfer, attribute change and compress to content items by means of the created graphical object. The content control method includes: detecting a preset touch input; creating a graphical object at a region where the touch input is detected; determining a mode of the created graphical object; linking at least one content item on the screen with the graphical object; and controlling the content item linked therewith depending on the mode of the graphical object. Hence, the user can control a mobile terminal through touch inputs in a more convenient and intuitive manner, increasing user convenience.

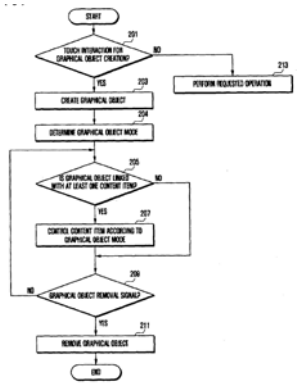

No. of Pages : 66 No. of Claims : 72

(12) PATENT APPLICATION PUBLICATION
(19) INDIA
(22) Date of filing of Application :22/05/2013
(21) Application No.585/KOL/2013 A
(43) Publication Date : 14/03/2014

(54) Title of the invention : TRANSPARENT POLYAMIDE-IMIDES

(51) International classification	:C08G 69/00	(71)**Name of Applicant :**
(31) Priority Document No	:12 183 987.2	**1)EMS-PATENT AG** Address of Applicant :VIA INNOVATIVA 1 7013 DOMAT/EMS SWITZERLAND
(32) Priority Date	:12/09/2012	(72)**Name of Inventor :**
(33) Name of priority country	:EPO	**1)HOFFMANN BOTHO**
(86) International Application No	:NA	**2)HOFF HEINZ**
Filing Date	:NA	**3)SCHERRER LUC**
(87) International Publication No	: NA	
(61) Patent of Addition to Application Number	:NA	
Filing Date	:NA	
(62) Divisional to Application Number	:NA	
Filing Date	:NA	

(57) Abstract :
What is described is a transparent polyamide-imide based on one or more different imido- dicarboxylic acids (AB) or derivatives thereof, and cycloaliphatic diamines (C) comprising 6 to 24 carbon atoms, wherein the imido-dicarboxylic acids (AB) or derivatives thereof are selected from the group of imido-dicarboxylic acids (AB) having the following structural formulas: wherein: ASL = (CH2)5-11, phenylene, (ylomethyl)phenyl, bis(ylomethyl)benzene, cyclohexanediyl, (ylomethyl)cyclohexyl, bis(ylomethyl)cyclohexane, cyclopentanediyl, (ylomethyl)cyclopentyl, bis(ylomethyl)cyclopentane, R = OH, O-alkyl, O-aryl, Cl, NH-ASL-COOH, Br, O-(CO)-alkyl, O-(CO)-aryl, R1 = H, methyl, ethyl, propyl, with the provision that the ring can be substituted once or twice, and, with double substitution of the ring, the two substituents can be selected from the group, but may be different, and also moulding compounds based thereon, a method for production, and uses.

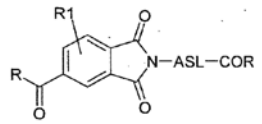

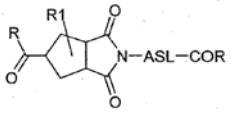

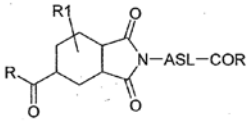

No. of Pages : 34 No. of Claims : 16

(12) PATENT APPLICATION PUBLICATION
(19) INDIA
(22) Date of filing of Application :15/01/2014

(21) Application No.83/KOLNP/2014 A
(43) Publication Date : 14/03/2014

(54) Title of the invention : LOCKING DEVICE FOR A DRIVE UNIT FOR ACTUATING A SWITCHING DEVICE OF A SWITCHGEAR ASSEMBLY

(51) International classification :H01H3/40,H01H9/24,H01H9/16
(31) Priority Document No :11006068.8
(32) Priority Date :25/07/2011
(33) Name of priority country :EPO
(86) International Application No :PCT/EP2012/002886
Filing Date :09/07/2012
(87) International Publication No:WO 2013/013772
(61) Patent of Addition to Application Number :NA
Filing Date :NA
(62) Divisional to Application Number :NA
Filing Date :NA

(71)**Name of Applicant :**
1)ABB TECHNOLOGY AG
Address of Applicant :Affolternstrasse. 44, CH-8050 Zürich,SWITZERLAND
(72)**Name of Inventor :**
1)BREISCH, Sebastian
2)WALDI, Wolfgang
3)STAHL, Thomas
4)STENGEL, Gregor

(57) Abstract :
The invention relates to a locking device for a drive unit for actuating a connection device of a switching assembly, said locking device comprising a spindle drive for actuating the connection device and a gear mechanism which is coupled or can be coupled thereto, and can be driven by a drive motor (320) or by a manually operated device, and after a defined number of partial rotations of a drive shaft connected to the gear mechanism, of the spindle arrangement, the connection device locks so that said connection device is brought into a predefined position or into a switch position and displays the position using provided position display modules. The number of partial rotations for locking the connection device is either larger or smaller than a complete rotation of the drive shaft and if the defined number of rotations is not reached, the position or switch position is not displayed by the position display module.

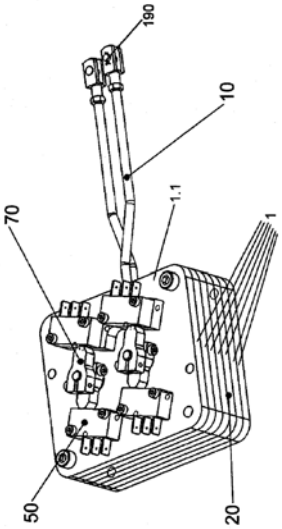

No. of Pages : 36 No. of Claims : 10

(12) PATENT APPLICATION PUBLICATION
(19) INDIA
(22) Date of filing of Application :13/12/2013

(21) Application No.3694/KOLNP/2013 A
(43) Publication Date : 14/03/2014

(54) Title of the invention : INFUSION PUMP

(51) International classification :A61M5/142,F04B43/12
(31) Priority Document No :2011-118135
(32) Priority Date :26/05/2011
(33) Name of priority country :Japan
(86) International Application No :PCT/JP2012/063079
Filing Date :22/05/2012
(87) International Publication No :WO 2012/161194
(61) Patent of Addition to Application Number :NA
Filing Date :NA
(62) Divisional to Application Number :NA
Filing Date :NA

(71)**Name of Applicant :**
1)NIPRO CORPORATION
Address of Applicant :9-3, Honjo-nishi 3-chome, Kita-ku, Osaka-shi, Osaka 531-8510, JAPAN
(72)**Name of Inventor :**
1)UEDA, Mitsutaka
2)AKAI, Ryoichi
3)TAKAHASHI, Hidenori

(57) Abstract :
By configuring an infusion pump such that a roller clamp (7) is held on the pump body, and providing a roller moving mechanism (3), which moves rollers (72) on the roller clamp (7) in conjunction with the operation of a door lock mechanism, so that an infusion tube (T) is blocked by the roller clamp (72) when a door lock mechanism is unlocked, free flow as a result of the door not being completely closed or forgetting to lock the door is reliably prevented. Further, by blocking the infusion tube (T) with the roller clamp (7) when the door lock mechanism has become unlocked prior to the door being opened after a transfusion is finished, problems such as detaching the infusion pump (T) from an infusion pump when the roller clamp (7) has accidentally been left open do not occur.

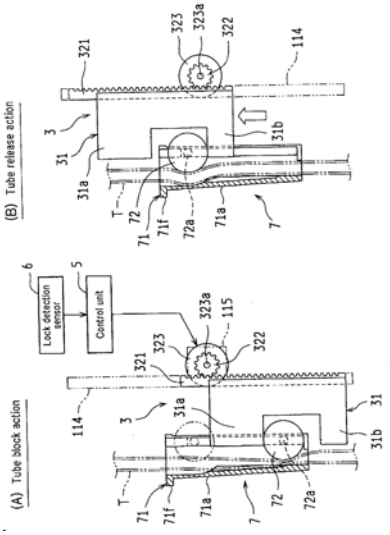

No. of Pages : 131 No. of Claims : 5

(12) PATENT APPLICATION PUBLICATION
(19) INDIA
(22) Date of filing of Application :13/01/2014

(21) Application No.57/KOLNP/2014 A
(43) Publication Date : 14/03/2014

(54) Title of the invention : VEHICLE DRIVING DEVICE AND VEHICLE DRIVING METHOD

(51) International classification	:F02D29/00,B60W10/04,B60W10/06
(31) Priority Document No	:2011-133649
(32) Priority Date	:15/06/2011
(33) Name of priority country	:Japan
(86) International Application No	:PCT/JP2012/055692
Filing Date	:06/03/2012
(87) International Publication No	:WO 2012/172840
(61) Patent of Addition to Application Number	:NA
Filing Date	:NA
(62) Divisional to Application Number	:NA
Filing Date	:NA

(71)**Name of Applicant :**
1)NISSAN MOTOR CO., LTD.
Address of Applicant :2, Takara-cho, Kanagawa-ku Yokohama-shi, Kanagawa 221-0023 Japan
(72)**Name of Inventor :**
1)Yuzuru TOHTA
2)Masahiro IRIYAMA
3)Yasuki FUKUMOTO
4)Morimasa YAMAWAKI
5)Tatsuya HAYASHI

(57) Abstract :
Output from an internal combustion engine (1) of a vehicle is transmitted to the drive wheel via a torque converter (2B) provided with a pump impeller and a turbine runner. A lockup clutch (2C) directly links the pump impeller and the turbine runner while the vehicle is coasting. The lockup clutch (2C) is disengaged when the accelerator pedal has been lightly pressed during vehicle coasting performed in a fuel-cutoff state. The fuel recovery of the internal combustion engine (1) is suppressed until the engaging pressure of the lockup clutch (2C) decreases. A change in vehicle speed, caused by an increase in output of the internal combustion engine (1) before the lockup clutch (2C) is substantively disengaged, is thereby prevented.

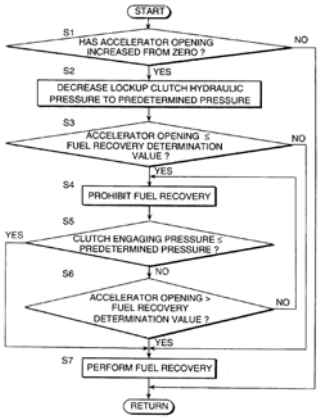

No. of Pages : 37 No. of Claims : 12

(12) PATENT APPLICATION PUBLICATION
(19) INDIA
(22) Date of filing of Application :15/01/2014

(21) Application No.75/KOLNP/2014 A
(43) Publication Date : 14/03/2014

(54) Title of the invention : DUAL CHAMBER MIXING DEVICE FOR A SYRINGE

(51) International classification :A61M5/19
(31) Priority Document No :61/515,554
(32) Priority Date :05/08/2011
(33) Name of priority country :U.S.A.
(86) International Application No :PCT/AU2012/000925
Filing Date :03/08/2012
(87) International Publication No :WO 2013/020170
(61) Patent of Addition to Application Number :NA
Filing Date :NA
(62) Divisional to Application Number :NA
Filing Date :NA

(71)**Name of Applicant :**
1)UNITRACT SYRINGE PTY LTD
Address of Applicant :Suite 3,Level 11, 1 Chifley Square, Sydney, New South Wales 2000 Australia
(72)**Name of Inventor :**
1)MOJDEHBAKHSH, Ramin
2)DUNGAR, Peter J.
3)PALMER, Ashley W.
4)JOHANNESSON, Robert E.
5)WEAVER, Philip, A.
6)WEIR, Aaron, M.

(57) Abstract :
A mixing device and a retractable syringe comprising same are provided. The mixing device comprises concentric outer and inner barrels that form an outer chamber, the inner barrel having an inner chamber. A mixing plunger is slidably located in the outer chamber. A seal located in the outer chamber is capable of axial movement, in response to depression of the mixing plunger, from a first position in sealing engagement with one or more apertures in the inner barrel to a second position intermediate the apertures and vents in the outer barrel. This allows depression of the mixing plunger to force a first substance from the outer chamber through the apertures to mix with a second substance in the inner chamber. The mixed substance in the inner barrel is then delivered by the syringe with subsequent needle retraction.

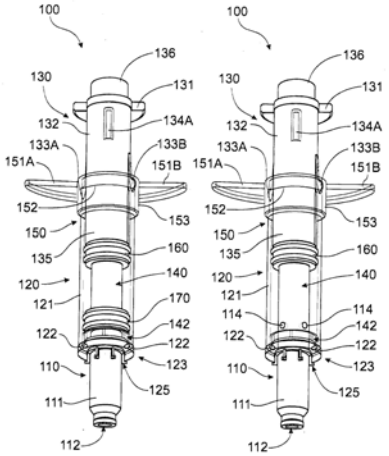

No. of Pages : 35 No. of Claims : 34

(12) PATENT APPLICATION PUBLICATION
(19) INDIA
(22) Date of filing of Application :15/01/2014

(21) Application No.78/KOLNP/2014 A
(43) Publication Date : 14/03/2014

(54) Title of the invention : COMPRESSOR

(51) International classification :F04C18/02,F04C29/02,F16C33/04
(31) Priority Document No :2011-158042
(32) Priority Date :19/07/2011
(33) Name of priority country :Japan
(86) International Application No :PCT/JP2012/004452
Filing Date :10/07/2012
(87) International Publication No :WO 2013/011658
(61) Patent of Addition to Application Number :NA
Filing Date :NA
(62) Divisional to Application Number :NA
Filing Date :NA

(71)**Name of Applicant :**
1)DAIKIN INDUSTRIES,LTD.
Address of Applicant :Umeda Center Building,4-12,Nakazaki-nishi 2-chome,Kita-ku,Osaka-shi,Osaka 530-8323,Japan
(72)**Name of Inventor :**
1)NISHIDE Youhei

(57) Abstract :
A compressor (1) prevents lubricating oil from leaking from the lower end of a bearing (3) and flowing to the outside of a casing (5). The compressor (1) is equipped with: a compression mechanism (7); a drive shaft (11); the bearing (3) of the drive shaft (11); and an oil supply passage (29) that supplies lubricating oil to a gap between the drive shaft (11) and the bearing (3). The drive shaft (11) is equipped with a large-diameter shaft part (11f) supported by the bearing (3) and a small-diameter shaft part (11g) connected to the lower end of the large- diameter shaft part (11f). A seal part (10), which prevents oil from leaking from the bearing (3), is equipped with an oil-receiving surface (26) that faces, with a gap therebetween, an annular stepped surface (12) formed at the boundary between the large-diameter shaft part (11f) and the small-diameter shaft part (11g).

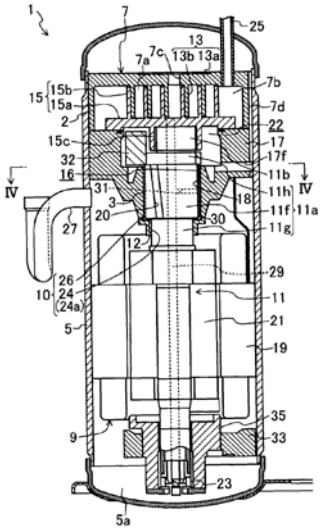

No. of Pages : 31 No. of Claims : 7

(12) PATENT APPLICATION PUBLICATION
(19) INDIA
(22) Date of filing of Application :04/09/2013
(21) Application No.1037/KOL/2013 A
(43) Publication Date : 14/03/2014

(54) Title of the invention : VEHICULAR DOOR HANDLE DEVICE

(51) International classification	:B60R 25/00
(31) Priority Document No	:2012-199211
(32) Priority Date	:11/09/2012
(33) Name of priority country	:Japan
(86) International Application No	:NA
Filing Date	:NA
(87) International Publication No	: NA
(61) Patent of Addition to Application Number	:NA
Filing Date	:NA
(62) Divisional to Application Number	:NA
Filing Date	:NA

(71)**Name of Applicant :**
1)SAKAE RIKEN COGYO CO., LTD.
Address of Applicant :221-2, TAKAKUMA, SOBUE, SOBUE-CHO, INAZAWA-SHI, AICHI 495-0001 JAPAN
(72)**Name of Inventor :**
1)KONDO HIDEYUKI
2)WATANABE YOSHINORI

(57) Abstract :
A lock pin 24 which can be fitted toward a pin-fitting hole 19 (lock pin hole) formed in a shaft 14 (restriction member) of a bell crank 4 is disposed in the turn-motion guide 6 (operation guide) of a base member 120. The base member 120 is provided with a case body 23 (cover body) which covers the base end 27 of the lock pin 24 from outside and which slidably supports the base end 27. A soft body 31 (cushion material) is interposed between the base end 27 of the lock pin 24 and a bottom 23b of the case body 23 opposed to the base end 27 in a state where the soft body 31 is fixed to the base end 27 of the lock pin 24. When the lock pin 24 is disposed at a normal position, the base end 27 of the lock pin 24 is supported by the bottom 23b of the case body 23 through the soft body 31. The invention provides a vehicular door handle device capable of preventing hammering sound from being generated by collision between a lock pin and a cover body.

No. of Pages : 39 No. of Claims : 5

(12) PATENT APPLICATION PUBLICATION
(19) INDIA
(22) Date of filing of Application :15/01/2014
(21) Application No.77/KOLNP/2014 A
(43) Publication Date : 14/03/2014

(54) Title of the invention : REFRIGERANT PIPE ATTACHMENT STRUCTURE

(51) International classification :H05K7/20,H01L23/473
(31) Priority Document No :2011-158834
(32) Priority Date :20/07/2011
(33) Name of priority country :Japan
(86) International Application No :PCT/JP2012/004167
Filing Date :27/06/2012
(87) International Publication No :WO 2013/011636
(61) Patent of Addition to Application Number :NA
Filing Date :NA
(62) Divisional to Application Number :NA
Filing Date :NA

(71)**Name of Applicant :**
1)DAIKIN INDUSTRIES,LTD.
Address of Applicant :Umeda Center Building,4-12,Nakazaki-nishi 2-chome,Kita-ku,Osaka-shi,Osaka 530-8323,Japan
(72)**Name of Inventor :**
1)TERAKI Junichi

(57) Abstract :
The present invention provides a coolant pipe installation structure which can reliably retain a coolant pipe and which can sufficiently decrease the thermal resistance between a coolant pipe and a heat-transmitting member. A heat-transmitting member (70) having a vertical groove part (72) into which a coolant pipe (15) fits, and which thermally contacts with a component to be cooled (63), is provided. An elastic member (80) formed in a long plate shape which extends in the extension direction of the coolant pipe (15), and having an opposing part (82) opposite the coolant pipe (15), is provided. A pushing structure (90) which pushes the elastic member (80) to the heat-transfer member (70) side is provided.

No. of Pages : 57 No. of Claims : 11

(12) PATENT APPLICATION PUBLICATION
(19) INDIA
(22) Date of filing of Application :04/07/2013

(21) Application No.803/KOL/2013 A
(43) Publication Date : 14/03/2014

(54) Title of the invention : CONTROL SYSTEM AND METHOD FOR CONTINUOUSLY VARIABLE TRANSMISSION WITH VARIATOR SPEED RATIO CLOSED-LOOP FEEDBACK

(51) International classification	:H01H 11/00
(31) Priority Document No	:13/611,428
(32) Priority Date	:12/09/2012
(33) Name of priority country	:U.S.A.
(86) International Application No	:NA
Filing Date	:NA
(87) International Publication No	: NA
(61) Patent of Addition to Application Number	:NA
Filing Date	:NA
(62) Divisional to Application Number	:NA
Filing Date	:NA

(71)**Name of Applicant :**
1)GM GLOBAL TECHNOLOGY OPERATIONS LLC
Address of Applicant :300 GM RENAISSANCE CENTER, DETROIT, MICHIGAN 48265-3000, U.S.A.
(72)**Name of Inventor :**
1)JOHN X CUI
2)RICHARD A WEAVER

(57) Abstract :
A system and method of controlling a continuously variable transmission with variator speed ratio (VSR) closed-loop feedback is provided. The method includes determining a desired VSR based on at least one of the driver and vehicle inputs, determining a motor position adjustment needed to adjust the position of a roller to achieve the desired VSR, driving the motor based on the determined motor position adjustment needed, sensing a transmission output speed as the motor is being driven, determining an actual VSR as the motor is being driven, and providing closed-loop feedback corresponding to any difference between the actual VSR and the desired VSR and driving the motor to eliminate the difference, thereby achieving the desired VSR with improved quick response time and more accurate control.

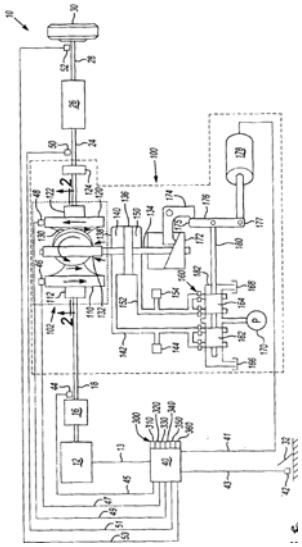

No. of Pages : 15 No. of Claims : 10

(12) PATENT APPLICATION PUBLICATION
(19) INDIA
(22) Date of filing of Application :13/12/2010
(21) Application No.1399/KOL/2010 A
(43) Publication Date : 14/03/2014

(54) Title of the invention : NOVEL IMMUNOSTIMULATOR/IMMUNOMODULATOR FROM MARINE MOLLUSC-TELESCOPIUM TELESCOPIUM

(51) International classification :A61K35/74
(31) Priority Document No :NA
(32) Priority Date :NA
(33) Name of priority country :NA
(86) International Application No :NA
Filing Date :NA
(87) International Publication No : NA
(61) Patent of Addition to Application Number :NA
Filing Date :NA
(62) Divisional to Application Number :NA
Filing Date :NA

(71)**Name of Applicant :**
1)DR. SUBHASIS ROY
Address of Applicant :14, BABURANIPARA, P.O. BHATPARA, DIST-24PGS, (NORTH), PIN-743123, WEST BENGAL, INDIA
2)DR. UTTAM DATTA
3)DR. N.J. MAITRA
4)DR.SAMIT KUMAR NANDI
5)DR. A.K. SINGH
(72)**Name of Inventor :**
1)DR. SUBHASIS ROY
2)DR. UTTAM DATTA

(57) Abstract :
This invention relates to an immunostimulator/immunomodulator from marine mollusc- Telescopium telescopium and in particular, this invention relates to an immunostimulator which is prepared from the glandular extract of the spermatheca and/or ovotestis from the marine gastropod mollusc. More particularly, this present invention relates to the immunostimulator which is produced from the glandular extract of the spermatheca and/or ovotestis of marine cone snail Telescopium telescopium possess novel properties to potentiate or able to enhance the immune system of the body. Furthermore, this invention also relates to the process of preparmg immunostimulatorlimmunomodulator from marine mollusc- Telescopium telescopium.

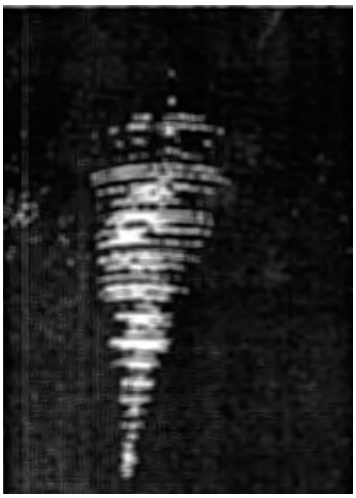

No. of Pages : 22 No. of Claims : 4

(12) PATENT APPLICATION PUBLICATION
(19) INDIA
(22) Date of filing of Application :16/01/2014

(21) Application No.95/KOLNP/2014 A
(43) Publication Date : 14/03/2014

(54) Title of the invention : NOVEL MICROWAVE ASSISTED FLASH PYROLYSIS SYSTEM AND METHOD THEREOF

(51) International classification	:C10B 53/00, B09B3/00
(31) Priority Document No	:NA
(32) Priority Date	:NA
(33) Name of priority country	:NA
(86) International Application No	:PCT/CN2011/077887
Filing Date	:01/08/2011
(87) International Publication No	:WO/2013/016866
(61) Patent of Addition to Application Number	:NA
Filing Date	:NA
(62) Divisional to Application Number	:NA
Filing Date	:NA

(71)**Name of Applicant :**
1)SCANDINAVIAN BIOFUEL COMPANY AS
Address of Applicant :Klingenberggt. 7A, P.O. Box 1938 Vika, NO-0125, Oslo (NO) Norway
2)PHASE TRANSITION ENERGY LIMITED
(72)**Name of Inventor :**
1)KASIN, Kejell Ivar

(57) Abstract :
The present invention provides a microwave assisted flash pyrolysis system to carry out microwave assisted flash pyrolysis in an industrial scale. The microwave assisted flash pyrolysis system comprises at least one microwave generator; a chamber comprises: at least one feedstock inlet, at least one baffle plate, a microwave-transparent rotating window, and at least one microwave inlet, at least one wet gas outlet, and at least one dry end product outlet. The present invention also provides a method using the same system to carry out microwave assisted flash pyrolysis.

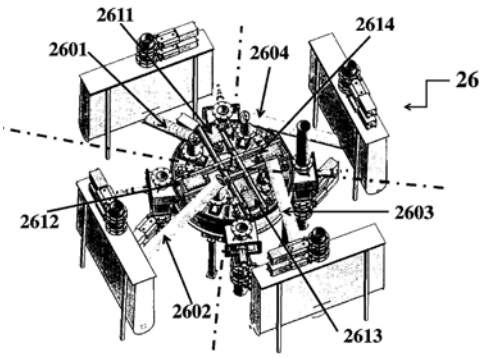

No. of Pages : 59 No. of Claims : 13

(12) PATENT APPLICATION PUBLICATION
(19) INDIA
(22) Date of filing of Application :13/01/2014
(21) Application No.56/KOLNP/2014 A
(43) Publication Date : 14/03/2014

(54) Title of the invention : SHIFT CONTROL DEVICE FOR AUTOMATIC TRANSMISSION

(51) International classification	:F16H61/08,F16D25/06,F16H61/688
(31) Priority Document No	:2011-135534
(32) Priority Date	:17/06/2011
(33) Name of priority country	:Japan
(86) International Application No	:PCT/JP2012/053448
Filing Date	:15/02/2012
(87) International Publication No	:WO 2012/172828
(61) Patent of Addition to Application Number	:NA
Filing Date	:NA
(62) Divisional to Application Number	:NA
Filing Date	:NA

(71)**Name of Applicant :**
1)NISSAN MOTOR CO., LTD.
Address of Applicant :2, Takara-cho, Kanagawa-ku Yokohama-shi, Kanagawa 221-0023, Japan
(72)**Name of Inventor :**
1)Ryohey TOYOTA

(57) Abstract :
The transmission torque (Tfc) of a friction clutch is gradually increased from 0 to the maximum value due to progressive locking thereof starting from a shift gear initiation time (t1). A dog clutch transmission torque (Tdc) is accordingly a value obtained by subtracting (Tfc) from a transmission input torque (motor torque Tm) and therefore gradually decreases from the maximum value at (t1). After a set time (TMs) has elapsed since (t1), at (t2), withdrawal force (Fdc = Fdc_L) (the permissible upper limit value of gear shift shock) in the release direction is imparted in advance to the dog clutch. Therefore, at time (t3) at which the dog clutch transmission torque (Tdc), which continues to decline even after (t2), has declined to a torque value equivalent to (Fdc = Fdc_L), the dog clutch is switched automatically from an engaged state to a disengaged state by the withdrawal force (Fdc) (which is equal to Fdc_L)), and gear shift is completed through progressive locking of the friction clutch. Accordingly, at no time during shifting gears do both the dog clutch and the friction clutch enter a released state, preventing a situation in which the automatic transmission goes into neutral during shifting and in which the quality of shifting is reduced.

No. of Pages : 30 No. of Claims : 8

(12) PATENT APPLICATION PUBLICATION
(19) INDIA
(22) Date of filing of Application :30/08/2013
(21) Application No.1008/KOL/2013 A
(43) Publication Date : 14/03/2014

(54) Title of the invention : AUTOMATED QUALITY CONTROL OF MEDICAL IMAGES

(51) International classification :A61B 5/00
(31) Priority Document No :102012216253.4
(32) Priority Date :13/09/2012
(33) Name of priority country :Germany
(86) International Application No :NA
Filing Date :NA
(87) International Publication No : NA
(61) Patent of Addition to Application Number :NA
Filing Date :NA
(62) Divisional to Application Number :NA
Filing Date :NA

(71)**Name of Applicant :**
1)SIEMENS AKTIENGESELLSCHAFT
Address of Applicant :WITTELSBACHERPLATZ 2, 80333 MÜNCHEN, GERMANY
(72)**Name of Inventor :**
1)UTE FEUERLEIN
2)PETER HUBER
3)JOHANN UEBLER

(57) Abstract :
The invention relates to a method and a system for automated quality control. The inventive system for automated quality control of medical images (B) comprises a recording unit (AE), which is designed to record (A) an image (B) by means of an imaging device (1), as well as a processing unit (VE) spatially separated from the recording unit (AE), which is designed for processing (V) the image (B). The invention is based on the idea of assigning an analysis unit (AyE), designed for analysis (Ay) of the image (B), for assessment (Bu) of the analysis (Ay) and for comput ing an assessment signal (BuS), to the recording unit (AE) and for further embodying the analysis unit (AyE) so that the analysis (Ay) includes at least a part of the processing (V). Through the direct analysis (Ay) of the image (B), which in cludes at least some conventional processing steps, a direct assessment (Bu) and also the direct computation of an assess ment signal (BuS) is made possible, through which the image (B) is assessed more quickly and more securely.

No. of Pages : 22 No. of Claims : 16

(12) PATENT APPLICATION PUBLICATION
(19) INDIA
(22) Date of filing of Application :12/09/2013

(21) Application No.1064/KOL/2013 A
(43) Publication Date : 14/03/2014

(54) Title of the invention : BRUSH MOTOR COMMUTATOR WITH SPARK SUPPRESSION AND METHOD FOR MAKING THE SAME

(51) International classification :H01R 39/00
(31) Priority Document No :201210336532.3
(32) Priority Date :12/09/2012
(33) Name of priority country :China
(86) International Application No :NA
Filing Date :NA
(87) International Publication No : NA
(61) Patent of Addition to Application Number :NA
Filing Date :NA
(62) Divisional to Application Number :NA
Filing Date :NA

(71)**Name of Applicant :**
1)JOHNSON ELECTRIC S.A.
Address of Applicant :BAHNHOFSTRASSE 18, CH-3280 MURTEN SWITZERLAND
(72)**Name of Inventor :**
1)LAU JAMES CHING SIK
2)GORLT WILFRIED

(57) Abstract :
A commutator (10, 40, 54, 60, 64, 70, 76, 78) for a brush motor includes a cylindrical insulating base (12), a plurality of segments (14) disposed on an outer surface (68) of the insulating base (12), circumferentially spaced from each other, and defining a plurality slots (42) between adjacent segments (14), and a plurality of insulating outgas elements (24) capable of releasing a gas having a lower conductivity than air and disposed on the outer surface (68) of the cylindrical insulating base (12). Each outgas element (24) is located between a corresponding pair of the plurality of segments (14), having a gas releasing surface (26) between the corresponding pair of segments (14) and lower than outer surfaces (28) of the corresponding pair of segments (14). A method for making a commutator is also provided.

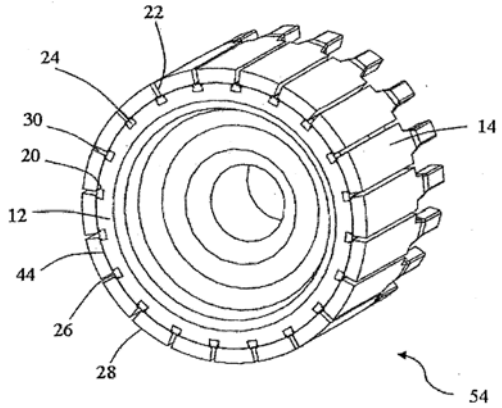

No. of Pages : 26 No. of Claims : 21

(12) PATENT APPLICATION PUBLICATION
(19) INDIA
(22) Date of filing of Application :13/01/2014
(21) Application No.58/KOLNP/2014 A
(43) Publication Date : 14/03/2014

(54) Title of the invention : HOLDING DEVICE FOR AN ADJUSTMENT DRIVE OF A MOTOR VEHICLE SEAT

(51) International classification :B60N2/02,B60N2/06
(31) Priority Document No :102011052058.9
(32) Priority Date :22/07/2011
(33) Name of priority country :Germany
(86) International Application No :PCT/EP2012/063150
Filing Date :05/07/2012
(87) International Publication No :WO 2013/013951
(61) Patent of Addition to Application Number :NA
Filing Date :NA
(62) Divisional to Application Number :NA
Filing Date :NA

(71)**Name of Applicant :**
1)C. ROB. HAMMERSTEIN GMBH & CO. KG
Address of Applicant :Merscheider Straße 167, 42699 Solingen, GERMANY
(72)**Name of Inventor :**
1)LANDSKRON, Robert
2)SCHÜRMANN, Thorsten

(57) Abstract :
The invention relates to a holding device (1) for an adjustment drive of a motor vehicle seat, having at least one connection flange (3,3a) formed from plastic material for fastening the holding device to the vehicle seat. In order to provide a holding device of the cited type which can be easily and reliably arranged on a vehicle seat, according to the invention a fastening clip (4) having at least one holding clip (5), which can be adjusted between a locking position and an assembly position in an elastic manner, is formed on the connection flange on one side and a locking element (6) is removably formed in a rest position on the other side, wherein the locking element can be manually relocated through an opening (7) in the connection flange from the rest position to a locked position in which the locking element blocks an elastic relocation of the holding clip into the assembly position.

No. of Pages : 15 No. of Claims : 11

(12) PATENT APPLICATION PUBLICATION
(19) INDIA
(22) Date of filing of Application :21/12/2012
(21) Application No.4088/KOLNP/2012 A
(43) Publication Date : 14/03/2014

(54) Title of the invention : MIXER DRUM DEVICE.

(51) International classification :B28C5/42
(31) Priority Document No :NA
(32) Priority Date :NA
(33) Name of priority country :NA
(86) International Application No :PCT/JP12/073366
Filing Date :12/09/2012
(87) International Publication No : NA
(61) Patent of Addition to Application Number :NA
Filing Date :NA
(62) Divisional to Application Number :NA
Filing Date :NA

(71)**Name of Applicant :**
1)KAYABA INDUSTRY CO., LTD.
Address of Applicant :WORLD TRADE CENTER BLDG, 4-1, HAMAMATSU-CHO 2-CHOME, MINATO-KU, TOKYO 105-6111, JAPAN
(72)**Name of Inventor :**
1)TETSUO KASAHARA
2)YOSUKE OTA

(57) Abstract :
A mixer drum device for a mixer truck to agitate a storage object includes a drum rotatably disposed on a vehicle body and configured to have an opening end on one end side and a closure end on another end side, a mixing blade disposed spirally along an inner wall surface of the drum, and a sub-blade extended from an edge portion of the mixing blade toward a center of rotation of the drum. The sub-blade is provided near the opening end of the drum.

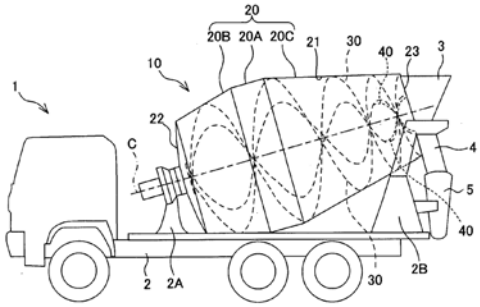

No. of Pages : 20 No. of Claims : 8

(12) PATENT APPLICATION PUBLICATION
(19) INDIA
(22) Date of filing of Application :13/01/2014

(21) Application No.55/KOLNP/2014 A
(43) Publication Date : 14/03/2014

(54) Title of the invention : ION EXCHANGER MATERIAL OF HIGH SALT TOLERANCE

(51) International classification :C07K1/18,B01J39/04,B01J39/18
(31) Priority Document No :10 2011
(32) Priority Date :13/07/2011
(33) Name of priority country :Germany
(86) International Application No :PCT/EP2012/063729
Filing Date :12/07/2012
(87) International Publication No :WO 2013/007799
(61) Patent of Addition to Application Number :NA
Filing Date :NA
(62) Divisional to Application Number :NA
Filing Date :NA

(71)**Name of Applicant :**
1)INSTRACTION GMBH
Address of Applicant :Janderstr. 3, 68199 Mannheim, GERMANY
(72)**Name of Inventor :**
1)ARENDT, Markus
2)STUMM, Gerhard
3)WELTER, Martin
4)SCHWARZ, Thomas

(57) Abstract :
The invention relates to a cross-linked sulfonated polymer, or to a cross-linked sulfonated polymer which is coated with a cross-linked polymer that contains amino groups, for use as an ion-exchanger material with high salt- tolerance for separating macromolecules out from a solution which originates from a biological source.

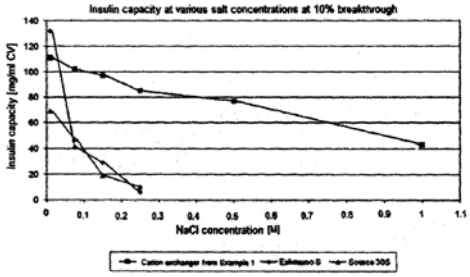

No. of Pages : 29 No. of Claims : 16

(12) PATENT APPLICATION PUBLICATION
(19) INDIA
(22) Date of filing of Application :13/01/2014

(21) Application No.59/KOLNP/2014 A
(43) Publication Date : 14/03/2014

(54) Title of the invention : HOLDING DEVICE FOR AN ADJUSTMENT DRIVE OF A MOTOR VEHICLE SEAT

(51) International classification :B60N2/02,B60N2/06
(31) Priority Document No :102011052045.7
(32) Priority Date :21/07/2011
(33) Name of priority country :Germany
(86) International Application No :PCT/EP2012/063152
Filing Date :05/07/2012
(87) International Publication No :WO 2013/010809
(61) Patent of Addition to Application Number :NA
Filing Date :NA
(62) Divisional to Application Number :NA
Filing Date :NA

(71)**Name of Applicant :**
1)C. ROB. HAMMERSTEIN GMBH & CO. KG
Address of Applicant :Merscheider Straße 167, 42699 Solingen, GERMANY
(72)**Name of Inventor :**
1)LANDSKRON, Robert
2)SCHÜRMANN, Thorsten

(57) Abstract :
Holding device for an adjustment drive of a motor vehicle seat. The invention relates to a holding device (2) for an adjustment drive of a motor vehicle seat, with at least one channel (4,4a) for receiving a drive shaft which is mounted rotatably in a shaft casing (5) and is connectable at one end to a drive unit (3) and at the other end to an adjustment device. In order to provide a holding device of the type mentioned at the beginning, said holding device permitting a reliable arrangement of the shaft casing, in particular in a manner secure against rotation, provision is made for the channel to be formed for positioning the shaft casing (5) in a manner partially offset in relation to the longitudinal axis of the channel.

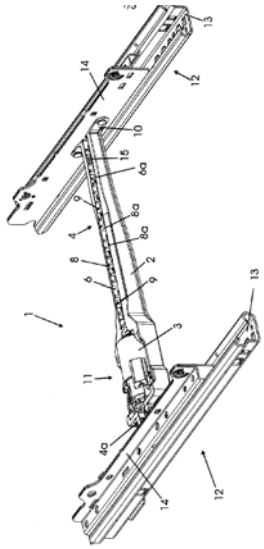

No. of Pages : 13 No. of Claims : 13

(12) PATENT APPLICATION PUBLICATION
(19) INDIA
(22) Date of filing of Application :13/12/2013
(21) Application No.3676/KOLNP/2013 A
(43) Publication Date : 14/03/2014

(54) Title of the invention : ELECTRIC MACHINE WITH ROTOR INTERIOR VENTILATION

(51) International classification :H02K1/32,H02K9/14,H02K9/16
(31) Priority Document No :102011078784.4
(32) Priority Date :07/07/2011
(33) Name of priority country :Germany
(86) International Application No :PCT/EP2012/062417
Filing Date :27/06/2012
(87) International Publication No:WO 2013/004559
(61) Patent of Addition to Application Number :NA
Filing Date :NA
(62) Divisional to Application Number :NA
Filing Date :NA

(71)**Name of Applicant :**
1)SIEMENS AKTIENGESELLSCHAFT
Address of Applicant :Wittelsbacherplatz 2, 80333 MÜnchen, GERMANY
(72)**Name of Inventor :**
1)BÜTTNER, Klaus
2)KIRCHNER, Klaus
3)MÜLLER, Michael

(57) Abstract :
The motor efficiency is intended to be increased by reducing the rotor temperature. Therefore, an electric machine is proposed having a stator (1), a rotor (2) which interacts magnetically with the stator (1), a housing (4, 5, 6) which surrounds the stator (1) and the rotor (2), and a hollow shaft (3) on which the rotor (2) is arranged and which is mounted on the housing (4, 5, 6). A radial fan (10) is provided in rotationally fixed fashion on the hollow shaft (3) on the ventilation side (B). A section (13) of a fan blade (11) of the radial fan (10) extends axially away from the housing to a greater extent than the hollow shaft (3). A guide element (17) with a radially extending plate is arranged in the hollow shaft (3), wherein the plate is arranged axially further away from the housing than the end side of the hollow shaft on the ventilation side (B). An inner coolant flow (18) can thus be delivered from the section (13) of the fan blade (11) of the radial fan (10) out of the hollow shaft (3) through a passage between the end side (9) of the hollow shaft (3) on the ventilation side and the plate radially outwards.

No. of Pages : 17 No. of Claims : 10

(12) PATENT APPLICATION PUBLICATION
(19) INDIA
(22) Date of filing of Application :13/01/2014
(21) Application No.62/KOLNP/2014 A
(43) Publication Date : 14/03/2014

(54) Title of the invention : SYSTEM AND METHOD FOR APPLYING EXTENDED ACCESSING BARRING IN WIRELESS COMMUNICATION SYSTEM

(51) International classification :H04B7/26,H04W48/02
(31) Priority Document No :61/521,910
(32) Priority Date :10/08/2011
(33) Name of priority country :U.S.A.
(86) International Application No :PCT/KR2012/006364
Filing Date :10/08/2012
(87) International Publication No :WO 2013/022298
(61) Patent of Addition to Application Number :NA
Filing Date :NA
(62) Divisional to Application Number :NA
Filing Date :NA

(71)**Name of Applicant :**
1)SAMSUNG ELECTRONICS CO., LTD.
Address of Applicant :129, Samsung-ro Yeongtong-gu, Suwon-si, Gyeonggi-do 443-742, Republic of Korea
(72)**Name of Inventor :**
1)Jae Hyuk JANG
2)Soeng Hun KIM

(57) Abstract :
A system and a method that employs Extended Access Barring (EAB) when a Machine Type Communication (MTC) device performs an attempt to access an evolved Node B (eNB) in a wireless communication system are provided. When User Equipment (UE) supporting MTC, an MTC device, performs an attempt to access a network, the system and method determines whether it can access the network and performs the access procedure. The system and method can control the operations of UE that performs an attempt to access a network, thereby preventing excessive access.

No. of Pages : 33 No. of Claims : 12

(12) PATENT APPLICATION PUBLICATION
(19) INDIA
(22) Date of filing of Application :15/01/2014

(21) Application No.81/KOLNP/2014 A
(43) Publication Date : 14/03/2014

(54) Title of the invention : DEVICE FOR CLEANING OF FOOTWEAR

(51) International classification :A47L23/02,A47L23/20,B60R3/00
(31) Priority Document No :20110873
(32) Priority Date :17/06/2011
(33) Name of priority country :Norway
(86) International Application No :PCT/NO2012/050109
Filing Date :15/06/2012
(87) International Publication No :WO 2012/173495
(61) Patent of Addition to Application Number :NA
Filing Date :NA
(62) Divisional to Application Number :NA
Filing Date :NA

(71)**Name of Applicant :**
1)ALFA OMEGA DEVELOPMENT AS
Address of Applicant :c/o Morten Kaspersen, Smedsboddingveien, NO-2150 Aarnes,Norway
(72)**Name of Inventor :**
1)BRAATEN,Tom Roger
2)KASPERSEN,Morten

(57) Abstract :
Device for cleaning of footwear in connection with use of construction site vehicles, comprising water pump (16), nozzles (20) and water pipe (18) between same. The device further comprises: - a compressor (22) for air and air pressure pipe (23) and nozzles (20,21), - an outer supporting structure in the form of a housing (2) arranged to protect the other parts of the device against external influence, - the housing further comprising a recess (14) for receiving footwear to be cleaned, and - at least one sensor (25) for initiating cleaning when footwear is positioned in said recess (14), the device further being arranged to automatically flush the footwear with water via the water pump (16) and immediately thereafter to blow the footwear dry with air from the compressor (22).

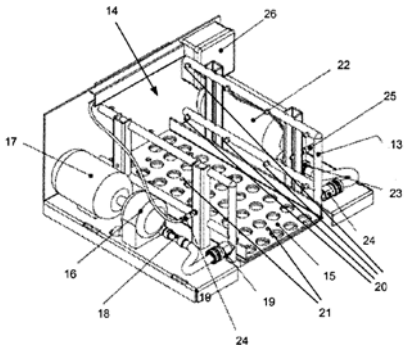

No. of Pages : 11 No. of Claims : 15

(12) PATENT APPLICATION PUBLICATION
(21) Application No.87/KOLNP/2014 A
(19) INDIA
(22) Date of filing of Application :15/01/2014
(43) Publication Date : 14/03/2014

(54) Title of the invention : METHOD FOR ANALYZING MUCIN 1 USING PROBE CAPABLE OF BINDING TO 3´-SULFONATED CORE 1 CARBOHYDRATE CHAIN, AND METHOD FOR DETECTING OR MONITORING BREAST CANCER

(51) International classification :G01N33/53,G01N33/574
(31) Priority Document No :2011-134350
(32) Priority Date :16/06/2011
(33) Name of priority country :Japan
(86) International Application No :PCT/JP2012/065360
Filing Date :15/06/2012
(87) International Publication No :WO 2012/173228
(61) Patent of Addition to Application Number :NA
Filing Date :NA
(62) Divisional to Application Number :NA
Filing Date :NA

(71)**Name of Applicant :**
1)TOKYO INSTITUTE OF TECHNOLOGY
Address of Applicant :2-12-1,Ookayama,Meguro-ku, Tokyo 1528550,Japan
2)YAMAGUCHI UNIVERSITY
(72)**Name of Inventor :**
1)YAMASHITA Katsuko
2)IDEO Hiroko
3)HINODA Yuji

(57) Abstract :
The purpose of the present invention is to provide a method for detecting even mucin 1 derived from breast cancer, which cannot be detected by a CA15-3 measurement method. The purpose can be achieved by a method for analyzing mucin 1 having a Sulfo-3Galß1-3GalNAc- R carbohydrate chain, characterized by comprising: a step of bringing a 3´-sulfonated core 1 carbohydrate chain binding probe capable of binding to the Sulfo-3Gal1-3GalNAc-R carbohydrate chain into contact with a sample to be tested; a step of bringing a 3´ sulfonated core 1 carbohydrate chain mucin 1 peptide binding probe capable of binding to mucin 1 having the Sulfo-3Galß1-3GalNAc-R carbohydrate chain or a mucin 1 binding probe capable of binding to mucin 1 into contact with the sample; and a step of detecting a bonded product of mucin 1 having the Sulfo 3Galß1-3GalNAc-R carbohydrate chain and the probes.

No. of Pages : 79 No. of Claims : 15

(12) PATENT APPLICATION PUBLICATION
(19) INDIA
(22) Date of filing of Application :10/09/2013
(21) Application No.1047/KOL/2013 A
(43) Publication Date : 14/03/2014

(54) Title of the invention : DEVELOPING DEVICE AND IMAGE FORMING APPARATUS

(51) International classification	:G03G 15/00
(31) Priority Document No	:2012-200356
(32) Priority Date	:12/09/2012
(33) Name of priority country	:Japan
(86) International Application No	:NA
Filing Date	:NA
(87) International Publication No	: NA
(61) Patent of Addition to Application Number	:NA
Filing Date	:NA
(62) Divisional to Application Number	:NA
Filing Date	:NA

(71)**Name of Applicant :**
1)Ricoh Company, Ltd.
Address of Applicant :3-6, NAKAMAGOME 1-CHOME, OHTA-KU, TOKYO, JAPAN
(72)**Name of Inventor :**
1)SHINGO SAKASHITA
2)JUNICHI AWAMURA
3)TSUNEYASU NAGATOMO
4)SATOSHI KOJIMA
5)TOMOKI MURAYAMA

(57) Abstract :
A developing device, including: a developer bearing member, which is disposed opposite to an electrostatic latent image bearing member and which bears thereon a developer for developing an electrostatic latent image formed on the electrostatic latent image bearing member and conveys the developer to a developing region, wherein the developer includes a toner and a carrier, the toner containing: a toner base containing a binder resin and a colorant; and an external additive, wherein the external additive contains coalescent particles each made up of a plurality of coalescing primary particles, and wherein a work function Wc of the carrier and a work function Ws of the developer bearing member satisfy a relationship of the following formula (1): Ws - Wc ≥ 0. 4eV ... (1)

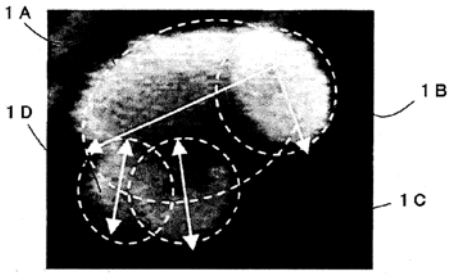

No. of Pages : 167 No. of Claims : 10

(12) PATENT APPLICATION PUBLICATION
(19) INDIA
(22) Date of filing of Application :05/04/2012

(21) Application No.402/KOL/2012 A
(43) Publication Date : 14/03/2014

(54) Title of the invention : VERTICAL HANDOVER METHOD FOR IMPLEMENTING HANDOFF AMONG HETEROGENEOUS WIRELESS NETWORKS AND A SYSTEM THEREOF

(51) International classification	:H04W 36/00
(31) Priority Document No	:NA
(32) Priority Date	:NA
(33) Name of priority country	:NA
(86) International Application No	:NA
Filing Date	:NA
(87) International Publication No	: NA
(61) Patent of Addition to Application Number	:NA
Filing Date	:NA
(62) Divisional to Application Number	:NA
Filing Date	:NA

(71)**Name of Applicant :**
1)INDIAN INSTITUTE OF TECHNOLOGY
Address of Applicant :Kharagpur PIN - 721 302 Dist - Midnapore State of West Bengal Sikkim India
(72)**Name of Inventor :**
1)MAHAPATRA Sudipta;
2)KUMAR C . S.;
3)VASU K.;
4)MAHESHWARI Sumit;

(57) Abstract :
This invention relates generally to a method and system for handover in a telecommunication system and more particularly to a vertical handover method for implementing handoff among heterogeneous wireless networks and a system thereof. It provides a FUZZY- TOP module for processing said information, said module evaluating handoff score value of network using a Fuzzy rule base system corresponding to said information parameters; said Fuzzy top module further comprising a fuzzification module taking said information for converting to membership values using membership functions, said membership values used for decision making to give an output membership value, said output membership value converted to a crisp value using the defuzzzification process, selecting a network using TOPSIS by comparing with said score value and executing handoff using mobility management protocols to said selected network.

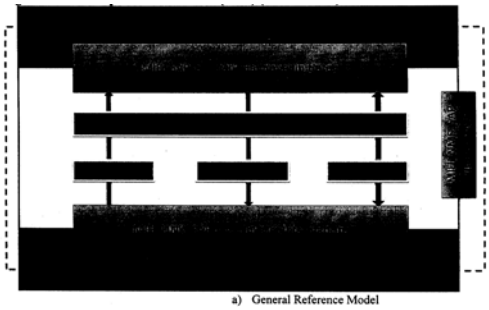

a) General Reference Model

No. of Pages : 41 No. of Claims : 15

(12) PATENT APPLICATION PUBLICATION
(19) INDIA
(22) Date of filing of Application :15/01/2014

(21) Application No.74/KOLNP/2014 A
(43) Publication Date : 14/03/2014

(54) Title of the invention : DEPHLEGMATOR

(51) International classification :F28B1/06,F28B9/00,F28D1/053
(31) Priority Document No :2011/05232
(32) Priority Date :15/07/2011
(33) Name of priority country :South Africa
(86) International Application No :PCT/IB2012/053511
Filing Date :10/07/2012
(87) International Publication No :WO 2013/011414
(61) Patent of Addition to Application Number :NA
Filing Date :NA
(62) Divisional to Application Number :NA
Filing Date :NA

(71)**Name of Applicant :**
1)STELLENBOSCH UNIVERSITY
Address of Applicant :Admin B,Victoria Street,Stellenbosch, 7600 Western Cape Province, South Africa
(72)**Name of Inventor :**
1)KRÖGER Detlev G.
2)REUTER,Hanno Carl Rudolf

(57) Abstract :
A dephlegmator is provided comprising two stages connected in series wherein a first stage includes an air-cooled reflux condenser and a second stage includes a generally horizontal tube bundle of smooth or finned tubes that can be operated selectively in either an air-cooled (dry) mode under selected ambient conditions or in a wet evaporatively cooled mode under other selected ambient conditions including that of elevated ambient temperature. Spray nozzles may be installed above the tube bundle whereby water can be sprayed onto the tube bundle. One or more collection troughs are preferably provided beneath the tube bundle for collecting run-off water and enabling recycling of excess deluge water. Preferably, the tube bundle comprises at least two, and preferably three groups of tubes communicating with each other wherein the second group of tubes has appreciably fewer tubes in it than the first group of tubes and any third group of tubes has appreciably fewer tubes in it than the second group of tubes.

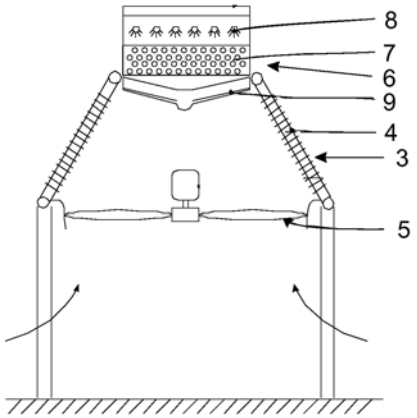

No. of Pages : 21 No. of Claims : 14

(12) PATENT APPLICATION PUBLICATION
(19) INDIA
(22) Date of filing of Application :15/01/2014

(21) Application No.86/KOLNP/2014 A
(43) Publication Date : 14/03/2014

(54) Title of the invention : TRANSPORT SYSTEM FOR PACKAGING MEANS, AND APPARATUS FOR HANDLING PACKAGING MEANS USING SUCH A TRANSPORT SYSTEM

(51) International classification	:B65B61/02,B41J3/407,B65G29/00
(31) Priority Document No	:10 2011 112 300.1
(32) Priority Date	:02/09/2011
(33) Name of priority country	:Germany
(86) International Application No	:PCT/EP2012/002742
Filing Date	:29/06/2012
(87) International Publication No	:WO 2013/029710
(61) Patent of Addition to Application Number	:NA
Filing Date	:NA
(62) Divisional to Application Number	:NA
Filing Date	:NA

(71)**Name of Applicant :**
1)KHS GMBH
Address of Applicant :Juchostrasse 20, 44143 Dortmund, GERMANY
(72)**Name of Inventor :**
1)VARHANIOVSKY, Gyula

(57) Abstract :
Transporting system for transporting packaging means (2) from a packaging-means inlet (3) to a packaging-means outlet (10), having a plurality of transporting elements (4,6-8,9) which can be driven in circulation, follow one after the other in a transporting direction of the packaging means (2) and form a transporting route (5) for the packaging means between the packaging-means inlet (3) and the packaging means outlet (10).

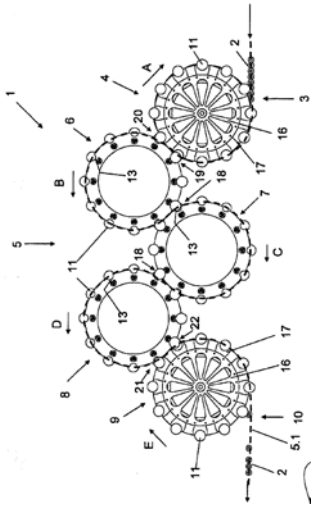

No. of Pages : 21 No. of Claims : 14

(12) PATENT APPLICATION PUBLICATION
(19) INDIA
(22) Date of filing of Application :19/06/2013

(21) Application No.729/KOL/2013 A
(43) Publication Date : 14/03/2014

(54) Title of the invention : STATION FOR A CABLE RAILWAY SYSTEM

(51) International classification	:B61B 12/00	(71)**Name of Applicant :**
(31) Priority Document No	:A 1000/2012	**1)INNOVA PATENT GmbH** Address of Applicant :RICKENBACHERSTRASSE 8-10, A-6960 WOLFURT AUSTRIA
(32) Priority Date	:13/09/2012	(72)**Name of Inventor :**
(33) Name of priority country	:Austria	**1)DÜR Gerd**
(86) International Application No	:NA	
Filing Date	:NA	
(87) International Publication No	: NA	
(61) Patent of Addition to Application Number	:NA	
Filing Date	:NA	
(62) Divisional to Application Number	:NA	
Filing Date	:NA	

(57) Abstract :
A cable railway installation has an endless conveying cable extending between terminal stations. Transport vehicles, such as chairs or gondolas, are coupleable to the conveying cable. In the two terminal stations the cable is guided over headwheels and, in optionally provided intermediate stations, it is guided over diverting pulleys, diverting rollers or the like. The transport vehicles entering the terminal stations are uncoupled from the conveying cable, conveyed through the stations by guide tires and then coupled to the conveying cable for exiting the stations. A load bearing structure, which carries components such as the headwheels, diverting pulleys and rollers, and the guide tires, is borne by at least one support disposed centrally between the paths of motion of the transport vehicles. An ascent leads up to the load bearing structure. The support carrying the load bearing structure is formed with a through passage through which the ascent is routed.

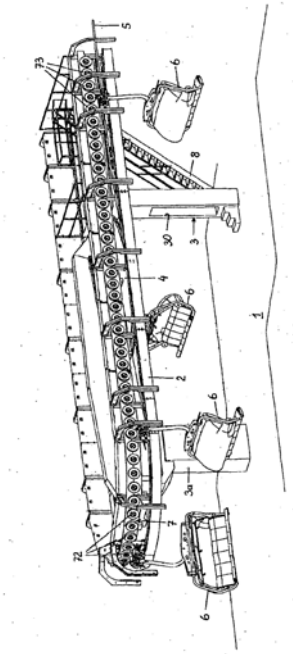

No. of Pages : 17 No. of Claims : 10

AMENDMENT UNDER SEC.57, KOLKATA .

In pursuance of leave granted under Section 57 of the Patents Act, 1970 the names of the Patentees in respect of Patent No. 247425 (3021/KOLNP/2006) have been amended to :

1.VOESTALPINE BWG GMBH & CO.KG. 2. VOESTALPINE VAE GMBH 3. VOESTALPINE WEICHENSYSTEME GMBH

AMENDMENT UNDER SEC.57 (KOLKATA)

Applications for change in the name of the Patentees in respect of Patent No.249328 (3793/KOLNP/2006) were filed from

1. BWG GMBH & CO.KG **to** VOESTALPINE BWG GMBH & CO.KG.

AND

2. VAE GMBH **to** VOESTALPINE VAE GMBH.

AND

3. VAE EISENBAHNSYSTEME GMBH to VOESTALPINE WEICHENSYSTEME GMBH

Any person interested may at any time within three months from the date of publication give notice on Form 14 to the Controller of Patents, if any, at the appropriate office.

PUBLICATION U/R 84(3) IN RESPECT OF APPLICATION FOR RESTORATION OF PATENT(CHENNAI)

Notice is hereby given that any person interested in opposing the following applications for Restoration of Patent under Section 60 of the Patent Act, 1970, may at any time within 2 months from the date of Publication of this notice, give notice to the Controller of Patents at the appropriate office on the prescribed Form 14 under Rule 85 of the Patents (Amendment) Rules, 2006.

PATENT NUMBER	APPLICANT	TITLE	DATE OF CESSATION	APPROPRIATE OFFICE
249424	M/S. TERUMO PENPOL LIMITED(India)	PVC CONTAINERS FOR THE COLLECTION AND STORAGE OF BLOOD AND BLOOD COMPONENTS.	16/02/2013	CHENNAI
201341	M/S. SILVERBROOK RESEARCH PTY LTD(Australia)	SCANNING ELECTRONIC BOOK.	29/08/2012	CHENNAI
209574	SILVERBROOK RESEARCH PTY. LTD(Australia)	A FLEXIBLE DISPLAY ASSEMBLY.	29/08/2012	CHENNAI

RESTORATION U/S 60. (KOLKATA)

Notice is hereby given that an application for restoration of lapsed Patent No. 210348 (00373/KOLNP/2003) was published on 12.06.2009. The Patent remain ceased w.e.f.05.08.2008 as the applicant is no longer interested to proceed with the patent.

Publication Under Section 43(2) in Respect of the Grant

Following Patents have been granted and any person interested in opposing these patents under Section 25(2) may at any time within one year from the date of this issue, give notice to the Controller of Patents at the appropriate office, on the prescribed form-7 along with written statement and evidence, if any.

Serial Number	Patent Number	Application Number	Date of Application	Date of Priority	Title of Invention	Name of Patentee	Date of Publication of Abstract u/s 11(A)	Appropriate Office
1	259295	1981/DEL/2007	19/09/2007 12:12:01	30/07/2007	TERRESTRIAL SOLAR ARRAY	SUNCORE PHOTOVOLTAICS INCORPORATED	06/02/2009	DELHI
2	259296	1774/DELNP/2008	07/09/2006	08/09/2005	CHOLESTEROL ABSORPTION INHIBITOR	KABUSHIKI KAISHA YAKULT HONSHA	27/06/2008	DELHI
3	259297	901/DEL/2007	23/04/2007	02/05/2006	A METHOD FOR NESTING PROCESSING INTELLIGENCE IN A DYNAMIC CONTENT DELIVERY ARCHITECTURE	RESEARCH IN MOTION LIMITED	09/11/2007	DELHI
4	259298	1442/DELNP/2007	08/09/2005	09/09/2004	A PROCESS FOR CONCENTRATION OF ANTIBODIES	GENENTECH,INC.,,NOVARTIS, AG.,	03/08/2007	DELHI
5	259301	2076/DEL/2008	03/09/2008 16:05:38	07/09/2007	HYDROTREATING PROCESSES FOR FABRICATING PETROLEUM DISTILLATES FROM LIGHT FISCHER-TROPSCH LIQUIDS	UOP LLC	24/04/2009	DELHI
6	259302	1722/DELNP/2006	26/10/2004	27/10/2003	DISTRIBUTOR FOR DISTRIBUTING FLOW OF FLUID	DANFOSS SILICON POWER GMBH	13/04/2007	DELHI
7	259303	5036/DELNP/2006	18/02/2005	20/02/2004	A COMPOSITION COMPRISING MONOVINYLARENE-CONJUGATED DIENE COUPLED BLOCK COPOLYMER	CHEVRON PHILLIPS CHEMICAL COMPANY, LP	10/08/2007	DELHI
8	259304	4008/DELNP/2006	10/03/2005	17/03/2004	GAS SUPPLY ARRANGEMENT OF A MARINE VESSEL AND METHOD OF PROVIDING GAS IN A MARINE VESSEL	W,,RTSIL,, FINLAND OY	27/04/2007	DELHI
9	259308	1031/DELNP/2007	19/08/2005	20/08/2004	METHOD FOR THE SYNTHESIS OF N-PROTECTED BIS-3,6-[4-AMINOBUTYL]-2,5-DIKETOPIPERAZINE	MANNKIND CORPORATION	03/08/2007	DELHI
10	259309	4970/DELNP/2007	18/11/2005	28/12/2004	A DUAL PHASE ORAL CARE COMPOSITION	COLGATE-PALMOLIVE COMPANY	17/08/2007	DELHI

11	259311	4551/DELNP/2006	11/02/2005	05/03/2004	SYNTHESIS OF ZSM-48 CRYSTALS WITH HETEROSTRUCTURAL, NON ZSM-48, SEEDING	EXXONMOBIL RESEARCH AND ENGINEERING COMPANY	10/08/2007	DELHI
12	259312	6496/DELNP/2006	30/11/2004	27/05/2004	A GRANULAR STARCH HYDROLYZING ENZYME COMPOSITION	GENENCOR INTERNATIONAL, INC.	31/08/2007	DELHI
13	259313	3621/DELNP/2007	17/10/2005	18/10/2004	REAGENTS AND METHODS FOR IMPROVING REPRODUCIBILITY AND REDUCING MISPRIMING IN PCR AMPLIFICATION	BRANDEIS UNIVERSITY	24/08/2007	DELHI
14	259318	2852/DEL/2005	26/10/2005		1,8/7, 8, FUSED IMIDAZOQUINOLONE CARBOXAMIDES	COUNCIL OF SCIENTIFIC & INDUSTRIAL RESEARCH	02/10/2009	DELHI
15	259319	4874/DELNP/2008	07/11/2006	08/12/2005	PROCESS FOR PREPARING DIAMINO DIPHENYL METHANES	HUNTSMAN INTERNATIONAL LLC.,	08/08/2008	DELHI
16	259322	1392/DELNP/2008	27/07/2005	27/07/2005	COMPOSITION FOR PREVENTING HARMFUL ORGANISMS	MITSUICHEMICAL INC.	01/08/2008	DELHI
17	259323	2574/DELNP/2008	31/08/2006	31/08/2005	REVERSIBLE SOLID OXIDE FUEL CELL STACK AND METHOD FOR PREPARING SAME	TECHNICAL UNIVERSITY OF DENMARK	25/07/2008	DELHI
18	259326	378/DELNP/2007	16/06/2004	16/06/2004	COMPOUND METAL ANALYTE SENSOR	ISENSE CORPORATION	03/08/2007	DELHI
19	259327	943/DELNP/2004	07/10/2002	08/10/2001	METHOD AND APPARATUS FOR PACKING OF ITEMS	SCHUR PACKAGING SYSTEMS A/S	30/10/2009	DELHI
20	259328	9541/DELNP/2007	08/06/2006	20/06/2005	CONTINUOUS CASTING PLANT HAVING AT LEAST ONE MULTIFUNCTION ROBOT	SIEMENS VAI METALS TECHNOLOGIES GMBH	11/01/2008	DELHI
21	259329	3983/DELNP/2007	16/12/2004	16/12/2004	METHOD AND PLANT FOR MANUFACTURING TYRES FOR VEHICLE WHEELS	PIRELLI TYRE S.P.A.	31/08/2007	DELHI
22	259333	1037/DEL/2008	22/04/2008 17:35:25	26/04/2007	COMBUSTION EQUIPMENT AND BURNER COMBUSTION METHOD	HITACHI, LTD.,	19/12/2008	DELHI
23	259337	1416/DELNP/2007	26/07/2005	27/07/2004	IMIDAZO [4,5-D] PYRIMIDINES, THEIR USES AND METHOD OF PREPARATION	GILEAD SCIENCES, INC.,K.U. LEUVEN RESEARCH & DEVELOPMENT,PUERS TINGER, GERHARD	17/08/2007	DELHI
24	259338	4866/DELNP/2007	25/11/2005	26/11/2004	MEDICAL TUBES	MITSUI CHEMICALS,INC.,OTSUKA PHARMACEUTICAL FACTORY,INC.	10/08/2007	DELHI

25	259340	3230/DEL/2005	01/12/2005		TIMEPIECE DIAL AND PROCESSES FOR MANUFACTURING THIS DIAL	ROLEX S.A.	02/10/2009	DELHI
26	259345	1614/DELNP/2007	30/08/2005	02/09/2004	METHOD FOR STABILIZING COPPER HYDROXIDE	E.I DUPONT DE NEMOURS AND COMPANY.,	03/08/2007	DELHI
27	259347	2078/DEL/2008	03/09/2008 16:05:38	07/09/2007	HYDROCRACKING PROCESS FOR FABRICATING DISTILLATE FROM FISCHER-TROPSCH WAXES	UOP LLC	24/04/2009	DELHI
28	259351	2309/DEL/2005	29/08/2005		A REUSABLE WIPING AND SCRUBBING ARTICLE AND A PROCESS FOR ITS PREPARATION	3M INNOVATIVE PROPERTIES COMPANY	31/07/2009	DELHI
29	259352	2229/DELNP/2008	19/09/2006	20/09/2005	METHOD OF REMOVAL OF RESIDUAL PIG IRON OF BLAST FURNACE	NIPPON STEEL ENGINEERING CO.,LTD	06/06/2008	DELHI
30	259355	3177/DELNP/2007	21/10/2005	22/10/2004	SUBSTRATE WITH AN ANTI-SOILING COATING	ESSILOR INTERNATIONAL (COMPAGNIE GENERALE D'OPTIQUE)	31/08/2007	DELHI
31	259359	2088/DEL/2005	05/08/2005		AN ORIENTATION UNIT FOR FRUIT SORTING AND GRADING MACHINE	COUNCIL OF SCIENTIFIC & INDUSTRIAL RESEARCH	31/07/2009	DELHI
32	259360	6350/DELNP/2006	27/06/2005	28/06/2004	A VACUUM INTERRUPTER CHAMBER WITH A RESIN-ENCAPSULATED POLE PIECE	ABB TECHNOLOGY AG	31/08/2007	DELHI
33	259361	1132/DELNP/2008	24/07/2006	31/08/2005	METHOD, COMMUNICATION SYSTEM, AND TERMINAL FOR OCCUPYING A KEY AND DISPLAY FIELD OF A TERMINAL	SIEMENS ENTERPRISE COMMUNICATION GMBH & CO. KG.	04/07/2008	DELHI
34	259363	2737/DELNP/2004	01/04/2003	25/04/2002	A METHOD FOR MANAGING DATA TRANSMITTED FROM A FIRST END NODE TO A SECOND END NODE IN A DATA PROCESSING SYSTEM AND A DATA PROCESSING SYSTEM THEREOF	INTERNATIONAL BUSINESS MACHINES CORPORATION	09/10/2009	DELHI
35	259366	1893/DELNP/2005	07/10/2003	07/10/2002	NEEDLE APPARATUS	DEAN BRIAN PRESTIDGE,MAXWELL EDMUND WHISSON	01/08/2008	DELHI
36	259367	7606/DELNP/2006	08/06/2005	08/06/2004	SACCHAROMYCES STRAINS AND A METHOD OF PRODUCING THEREOF	MICROBIOGEN PTY LTD	22/06/2007	DELHI

37	259368	9843/DELNP/2007	26/06/2006	27/06/2005	A SINGLE STRAND BANDED POWER TRANSMITTING V-BELT	THE GATES CORPORATION	20/06/2008	DELHI
38	259370	1526/DELNP/2004	03/12/2002	07/12/2001	METHOD AND SYSTEM FOR THE TRANSMISSION OF DATA THAT HAS NOT BEEN EXPLICITLY REQUESTED IN A MOBILE RADIO SYSTEM	SIEMENS AKTIENGESELLSCHAFT	16/03/2007	DELHI
39	259372	2383/DELNP/2004	17/03/2003	19/03/2002	METHOD, ANNULAR SEAL AND DEVICE FOR OBTAINING AN OPTICAL LENS	ESSILOR INTERNATIONAL [COMPAGNIE GENERALE D'OPTIQUE]	09/10/2009	DELHI
40	259374	161/DELNP/2006	20/07/2004	28/07/2003	A METHOD AND SYSTEM FOR ACCEPTING USER INPUT FOR PERFORMING A COMMAND	KUPKA Sig G.	24/08/2007	DELHI
41	259375	215/DEL/2005	03/02/2005	13/02/2004	PROTECTION OF A COMPUTING DEVICE FROM COMPUTER EXPLOITS DELIVERED OVER A NETWORKED ENVIRONMENT	MICROSOFT CORPORATION	29/12/2006	DELHI
42	259377	280/DEL/2005	09/02/2005	10/02/2004	APPARATUS, AND ASSOCIATED METHOD, FOR SYNCHRONIZING DATABASES CONNECTED BY WAY OF A RADIO INTERFACE	RESEARCH IN MOTION LIMITED	29/12/2006	DELHI
43	259378	2923/DELNP/2008	19/10/2006	20/10/2005	IMPROVED AAV VECTORS PRODUCED IN INSECT CELLS	UNIQURE BIOPHARMA B.V	04/07/2008	DELHI
44	259379	544/DELNP/2009	24/07/2006	24/07/2006	PROCESS FOR REMOVAL OF OXYGENATES FROM A PARAFFIN STREAM	UOP LLC	20/08/2010	DELHI
45	259385	1642/DELNP/2006	27/08/2004	28/08/2003	A TRANSCEIVER	GCT SEMICONDUCTOR, INC.	17/08/2007	DELHI
46	259386	2211/DELNP/2006	11/10/2004	29/10/2003	THERMAL CUSHION AND DEVICE COMPRISING THE SAME	WELLCARE PRODUCTS S.A.	27/04/2007	DELHI
47	259387	1361/DEL/2007	25/06/2007 16:09:10	31/08/2006	MOBILE WIRELESS COMMUNICATIONS DEVICE HAVING DUAL ANTENNA SYSTEM FOR CELLULAR AND WIFI	RESEARCH IN MOTION LIMITED	04/04/2008	DELHI
48	259388	1677/DELNP/2007	27/10/2005	27/10/2004	A METHOD FOR PURIFICATION OF A GLYCOPEPTIDE ANTIBIOTIC	XELLIA PHARMACEUTICALS APS	03/08/2007	DELHI
49	259389	6597/DELNP/2007	17/03/2006	18/03/2005	CAT ALLERGEN FUSION PROTEINS AND USES THEREOF	CYTOS BIOTECHNOLOGY AG	21/09/2007	DELHI
50	259390	3222/DEL/2005	01/12/2005		DATA MANAGEMENT SYSTEM	MICROSOFT CORPORATION	10/09/2010	DELHI

51	259391	231/DEL/2005	04/02/2005	31/03/2004	INTERLOCKING BRAKE SYSTEM FOR SMALL TYPE VEHICLE	HONDA MOTOR CO. LTD	09/02/2007	DELHI
52	259392	5132/DELNP/2007	19/01/2006	25/01/2005	PEER-TO-PEER WIRELESS COMMUNICATION SYSTEM	INTER DIGITAL TECHNOLOGY CORPORATION	17/08/2007	DELHI
53	259393	2648/DEL/2005	04/10/2005		A VACCINE EFFECTIVE AGAINST TYPHOID	DIRECTOR GENERAL, DEFENCE RESEARCH & DEVELOPMENT ORGANISATION	31/07/2009	DELHI
54	259394	9049/DELNP/2008	29/03/2007	31/03/2006	POLYMERIZABLE COMPOSITION, AND RESIN AND OPTICAL PART USING THE SAME	MITSUI CHEMICALS INC,	27/03/2009	DELHI
55	259395	6/DEL/2006	08/04/1997	26/04/1996	A POWER CONTROL AND A DIGITAL CELLULAR RADIO COMMUNICATION SYSTEM AND A SYSTEM THEREOF	TELLFONAKTIEBOLAGET LM ERICSSON (PUBL)	31/08/2007	DELHI
56	259396	3183/DELNP/2004	11/04/2003	17/04/2002	EQUALIZER MODE SWITCH	THOMSON LICENSING S.A	09/10/2009	DELHI
57	259397	1921/DEL/2006	28/08/2006		NEEDLE PROTECTOR ASSEMBLY	POLY MEDICURE LIMITED	12/09/2008	DELHI
58	259399	5119/DELNP/2007	21/12/2005	22/12/2004	METHOD AND APPARATUS FOR TRANSMISSION OF INFORMATION IN A MULTIPLE ACCESS COMMUNICATION SYSTEM	QUALCOMM INCORPORATED	17/08/2007	DELHI
59	259407	1759/DEL/2004	17/09/2004		AN INTRINSICALLY SAFE ZENER REGULATED POWER SUPPLY UNIT USEFUL IN HAZARDOUS LOCATIONS	COUNCIL OF SCIENTIFIC AND INDUSTRIAL RESEARCH	18/08/2006	DELHI
60	259409	2075/DEL/1996	23/09/1996		ADAPTER MODULE FOR DIRECT-TO-HOME TELEVISION BROADCAST RECEIVING SYSTEM	TERRASTAR, INC.	01/08/2008	DELHI
61	259412	7913/DELNP/2006	14/06/2005	18/06/2004	A METHOD OF ASSIGNING FREQUENCY SUBBANDS IN A COMMUNICATION SYSTEM AND APPARATUS THEREOF	QUALCOMM INCORPORATED	17/08/2007	DELHI
62	259413	1815/DELNP/2005	23/07/2004	24/10/2003	SYSTEMS AND METHOD FOR AUTOMATING SYSTEM RELATED ADMINISTRATIVE TASKS	MICROSOFT CORPORATION	09/10/2009	DELHI
63	259414	1909/DEL/1996	27/08/1996	03/10/1995	'A SUBSCRIBER UNIT	MOTOROLA, INC.,	12/09/2008	DELHI

64	259415	2427/DEL/1997	27/08/1997	06/09/1996	METHODS AND APPARATUS FOR GENERATING TIMING SIGNALS IN A RADIOCOMMUNICATIO N UNIT	TELEFONAKTIEBOLAG ET LM ERICSSON (Publ)	20/03/2009	DELHI
65	259416	232/DELNP/2005	22/07/2008	29/07/2002	SYNCHRONIZATION STRATEGY AND ARCHITECTURE FOR SPREAD-SPECTRUM RECEIVERS	THOMSON LICENSING S.A.	05/12/2008	DELHI
66	259417	140/DELNP/2008	24/11/2006	27/01/2006	ENGINE MISFIRE DETECTION APPARATUS, HYBRID VEHICLE EQUIPPED WITH THE SAME, AND ENGINE MISFIRE DETECTION METHOD	TOYOTA JIDOSHA KABUSHIKI KAISHA	01/08/2008	DELHI
67	259418	672/DELNP/2006	26/07/2004	29/07/2003	STERILANT SYSTEM	TRISTEL PLC	31/08/2007	DELHI
68	259421	888/DEL/2000	04/10/2000	12/11/1999	DEVICE AND METHOD FOR CONTROLLING SUPPLY OF CURRENT AND STATIC CAPACITANCE TO COMPRESSOR	LG ELECTRONICS INC.	25/07/2008	DELHI
69	259422	3498/DELNP/200 7	19/12/2005	21/12/2004	PROCESS FOR THE PREPARATION OF A 2-ETHYLAMINOPYRIDINE DERIVATIVE	BAYER CROPSCIENCE AG	31/08/2007	DELHI
70	259423	7083/DELNP/200 6	17/05/2005	19/05/2004	ADAPTATION OF IQ-ERROR COMPENSATION.	TELEFONAKTIEBOLAG ET LM ERICSSON (PUBL)	31/08/2007	DELHI
71	259424	10243/DELNP/20 08	03/05/2007	22/06/2006	PROCESS FOR MAKING POLYSILOXANE/POLYIM IDE COPOLYMER BLENDS	SABIC INNOVATIVE PLASTICS IP B.V	20/03/2009	DELHI
72	259425	125/DELNP/2008	30/06/2006	05/07/2005	A MULTICARRIER HSDPA TRAFFIC TRANSMISSION CHANNEL CODING METHOD AND THE CODING APPARATUS THEREOF	SHANGHAI ULTIMATE POWER COMMUNICATIONS TECHNOLOGY CO., LTD.	20/06/2008	DELHI
73	259427	381/DELNP/2007	15/06/2005	15/06/2004	CHEMICALLY ASSISTED MILLING OF SILICAS	W. R. GRACE & CO.-CONN.	03/08/2007	DELHI
74	259428	29/DEL/2001	15/01/2001		SENSING DEVICE FOR THE NON-DESTRUCTIVE EVALUATION OF STEEL STRUCTURES OR COMPONENTS	DEPARTMENT OF SCIENCE AND TECHNOLOGY,COUNCI L OF SCIENTIFIC AND INDUSTRIAL RESEARCH	12/06/2009	DELHI
75	259429	1075/DEL/2003	01/09/2003	04/09/2002	HEADER OBJECT PROTECTION FOR A DATA STREAM	MICROSOFT CORPORATION	27/05/2005	DELHI
76	259430	3351/DELNP/200 7	11/11/2005	12/11/2004	5-SUBSTITUTED QUINOLINE COMPOUND AND PROCESS THEREOF.	BAYER INTELLECTUAL PROPERTY GMBH	31/08/2007	DELHI

77	259431	614/DELNP/2003	19/10/2001	23/10/2000	A FLUID DISPENSER DEVICE	VALOIS S.A.S	15/05/2009	DELHI
78	259432	5944/DELNP/2007	31/01/2005	31/01/2005	PROCESS FOR PREPARING NUTRITIONAL PRODUCTS	NESTEC S.A.	24/08/2007	DELHI
79	259433	5327/DELNP/2006	28/03/2005	30/03/2004	A KEY BLANK,KEY AND LOCK	MUL-T-LOCK TECHNOLOGIES LTD.	10/08/2007	DELHI
80	259436	250/DELNP/2003	07/09/2001	11/09/2000	A NETWORK FOR DISTRIBUTING SIGNALS TO A PLURALITY OF USER EQUIPMENT	PRYSMIAN CAVI E SISTEMI ENERGIA S.r.1.	20/03/2009	DELHI
81	259437	2753/DEL/2005	13/10/2005	12/10/2004	A SOLID FEED MEANS FOR A DIRECT SMELTING VESSEL OF A DIRECT SMELTING PLANT	TECHNOLOGICAL RESOURCES PTY LIMITED	31/07/2009	DELHI
82	259441	4049/DELNP/2004	30/06/2003	01/07/2002	A SYSTEM AND METHOD FOR PROVIDING USER CONTROL OVER REPEATING OBJECTS EMBEDDED IN A STREAM	MICROSOFT CORPORATION	04/12/2009	DELHI
83	259443	8752/DELNP/2007	16/05/2006	01/06/2005	ULTRASONIC METER AND A METHOD FOR DETERMINING PIPE ROUGHNESS	DANIEL MEASUREMENT AND CONTROL, INC.	27/06/2008	DELHI
84	259444	539/DEL/2005	11/03/2005	30/03/2004	SCROLL FLUID MACHINE	ANEST IWATA CORPORATION	01/12/2006	DELHI

Publication Under Section 43(2) in Respect of the Grant

Following Patents have been granted and any person interested in opposing these patents under Section 25(2) may at any time within one year from the date of this issue, give notice to the Controller of Patents at the appropriate office, on the prescribed form-7 along with written statement and evidence, if any.

Serial Number	Patent Number	Application Number	Date of Application	Date of Priority	Title of Invention	Name of Patentee	Date of Publication of Abstract u/s 11(A)	Appropriate Office
1	259294	833/MUMNP/2008	20/10/2006	20/10/2005	BACKING STORE BUFFER FOR THE REGISTER SAVE ENGINE OF A STACKED REGISTER FILE	QUALCOMM INCORPORATED	05/09/2008	MUMBAI
2	259300	321/MUMNP/2008	21/08/2006	22/08/2005	INTEGRATED MOTOR AND CONTROLLER ASSEMBLIES FOR HORIZONTAL AXIS WASHING MACHINES	EMERSON ELECTRIC COMPANY	07/03/2008	MUMBAI
3	259306	2050/MUMNP/2008	19/03/2007	30/03/2006	SKIN LIGHTENING AGENTS, COMPOSITIONS AND METHODS	HINDUSTAN UNILEVER LIMITED	20/02/2009	MUMBAI
4	259324	297/MUMNP/2008	22/08/2006	14/09/2005	INJECTION DEVICE	TECPHARMA LICENSING AG	07/03/2008	MUMBAI
5	259330	846/MUMNP/2008	20/10/2006	20/10/2005	METHOD AND APPARATUS TO CLEAR SEMAPHORE RESERVATION	QUALCOMM INCORPORATED	26/06/2009	MUMBAI
6	259334	1181/MUMNP/2008	19/01/2007	20/01/2006	METHOD AND APPARATUS FOR DETERMINING AN ENCODING METHOD BASED ON A DISTORTION VALUE RELATED TO ERROR CONCEALMENT	QUALCOMM INCORPORATED	19/09/2008	MUMBAI
7	259335	1634/MUMNP/2008	13/02/2007	17/02/2006	SYSTEM AND METHOD FOR MULTIPLE SIMULTANEOUS GROUP COMMUNICATIONS IN A WIRELESS SYSTEM	QUALCOMM INCORPORATED	03/10/2008	MUMBAI
8	259336	54/MUMNP/2009	31/07/2007	31/07/2006	SYSTEMS AND METHODS FOR INCLUDING AN IDENTIFIER WITH A PACKET ASSOCIATED WITH A SPEECH SIGNAL	QUALCOMM INCORPORATED	22/05/2009	MUMBAI
9	259341	1760/MUMNP/2008	07/03/2007	07/03/2006	NETWORK SELECTION BY WIRELESS TERMINALS	QUALCOMM INCORPORATED	13/02/2009	MUMBAI
10	259344	1117/MUMNP/2008	20/12/2006	22/12/2005	METHODS AND APPARATUS FOR COMMUNICATING TRANSMISSION BACKLOG INFORMATION	QUALCOMM INCORPORATED	19/09/2008	MUMBAI

11	259362	2061/MUMNP/2009	25/09/2008	12/10/2007	LAUNDRY TREATMENT COMPOSITIONS WITH LAMELLAR VISUAL CUES.	HINDUSTAN UNILEVER LIMITED	11/06/2010	MUMBAI
12	259364	1070/MUMNP/2008	07/11/2006	14/11/2005	BED CONTROL PROCEDURE	HUNTLEIGH TECHNOLOGY LIMITED	25/07/2008	MUMBAI
13	259376	127/MUMNP/2008	12/07/2006	14/07/2005	METHOD AND APPARATUS FOR ENCRYPTING/DECRYPTING MULTIMEDIA CONTENT TO ALLOW RANDOM ACCESS	QUALCOMM INCORPORATED	26/06/2009	MUMBAI
14	259401	1309/MUMNP/2008	22/01/2007	20/01/2006	TRANSLATION LOOKASIDE BUFFER MANIPULATION	QUALCOMM INCORPORATED	19/09/2008	MUMBAI
15	259403	368/MUMNP/2008	10/08/2006	10/08/2005	METHOD AND APPARATUS FOR CREATING A FINGERPRINT FOR A WIRELESS NETWORK	QUALCOMM INCORPORATED	29/08/2008	MUMBAI
16	259404	791/MUMNP/2008	05/10/2006	05/10/2005	VIDEO FRAME MOTION-BASED AUTOMATIC REGION-OF-INTEREST DETECTION	QUALCOMM INCORPORATED	27/06/2008	MUMBAI
17	259405	1480/MUMNP/2006	09/07/2004	09/07/2004	METHOD AND ARRANGEMENT FOR PROVIDING DIFFERENT SERVICES IN A MULTIMEDIA COMMUNICATION SYSTEM	TELEFONAKTIEBOLAGET LM ERICSSON (PUBL)	08/06/2007	MUMBAI
18	259406	199/MUM/2008	29/01/2008 12:17:24	26/06/2007	EXTRUDED PERSONAL WASHING BARS WITH PLATE-LIKE INCLUSIONS	HINDUSTAN UNILEVER LIMITED	12/06/2009	MUMBAI
19	259408	2133/MUMNP/2008	19/03/2007	12/04/2006	A METHOD OF INDICATING MOBILE STATION CAPABILITY TO A NETWORK	NOKIA SIEMENS NETWORKS GmbH & CO. KG	16/01/2009	MUMBAI
20	259410	537/MUMNP/2008	29/08/2006	29/08/2005	AN APPARATUS AND METHOD FOR SUPPORTING SOFT HANDOFF ON A REVERSE LINK IN A WIRELESS MULTIPLE-ACCESS COMMUNICATION SYSTEM	QUALCOMM INCORPORATED	26/06/2009	MUMBAI
21	259411	2301/MUMNP/2008	15/05/2007	16/05/2006	METHOD FOR SAFELY TRANSMITTING SHORT ACK/NACK BITMAPS IN ARQ PROCESS INSIDE EDGE COMPLIANT SYSTEMS	NOKIA SIEMENS NETWORKS S.P.A.	27/02/2009	MUMBAI

Publication Under Section 43(2) in Respect of the Grant

Following Patents have been granted and any person interested in opposing these patents under Section 25(2) may at any time within one year from the date of this issue, give notice to the Controller of Patents at the appropriate office, on the prescribed form-7 along with written statement and evidence, if any.

Serial Number	Patent Number	Application Number	Date of Application	Date of Priority	Title of Invention	Name of Patentee	Date of Publication of Abstract u/s 11(A)	Appropriate Office
1	259317	4442/CHENP/2006	12/03/2001	13/03/2000	FINELY DIVIDED METAL CATALYST	OVONIC BATTERY COMPANY, INC	29/06/2007	CHENNAI
2	259321	4486/CHENP/2006	07/06/2005	07/06/2004	A PHARMACEUTICAL COMPOSITION COMPRISING COMPOUNDS DERIVED FROM LIDOCAINE	FUNDACAO OSWALDO CRUZ - FIOCRUZ	15/06/2007	CHENNAI
3	259325	4961/CHENP/2008	19/03/2007	21/03/2006	A COMPOSITION CONTAINING ZIRCONIUM, CERIUM AND LANTHANIDE OXIDES, METHOD OF PREPARATION AND ITS APPLICATION	RHODIA OPERATIONS	13/03/2009	CHENNAI
4	259339	2752/CHENP/2007	20/12/2005	22/12/2004	METHOD FOR DRYING A WET POLYMER	SOLVAY (SOCIETE ANONYME)	07/09/2007	CHENNAI
5	259342	4159/CHENP/2007	17/02/2006	22/02/2005	A FLUID APPLICATOR	RECKITT BENCKISER (UK) LIMITED	16/11/2007	CHENNAI
6	259348	3300/CHENP/2006	11/02/2005	12/02/2004	A SEATING DEVICE FOR SUPPORTING A USER SITTING IN A CROSS LEGGED YOGA POSITION	BRODESIGNS INC.	15/06/2007	CHENNAI
7	259349	4821/CHENP/2006	28/07/2005	03/08/2004	APPARATUS FOR FORMING TRIGGERING PROJECTIONS IN FLYWHEEL, AND METHOD OF FORMING TRIGGERING PROJECTIONS IN FLYWHEEL	Mitsuba Corporation	05/10/2007	CHENNAI
8	259358	793/CHE/2005	23/06/2005		A PALLET AND A METHOD FOR MANUFACTURING THE SAME	SRI SIDDHI VINAYAKA PALLETS PVT. LTD.	27/07/2007	CHENNAI
9	259380	2343/CHE/2008	25/09/2008 16:16:57	26/09/2007	A FOLDABLE STEP UNIT FOR A VEHICLE, AND A VEHICLE PROVIDED WITH SUCH A STEP UNIT	EUROCOPTER	21/08/2009	CHENNAI
10	259381	3754/CHENP/2008	23/01/2006	23/01/2006	METHOD FOR PERMANENTLY MONITORING PRESSURIZED PIPELINES AND LINE SYSTEMS WHICH CARRY FLUID MEDIA	WINDISCH, Stefan,HEINL, Alexander	13/03/2009	CHENNAI

11	259382	4124/CHENP/2008	18/01/2007	07/02/2006	METHOD FOR REDUCING NITROGEN OXIDE ON THE PRIMARY SIDE IN A TWO-STAGE COMBUSTION PROCESS	Forschungszentrum Karlsruhe GmbH	13/03/2009	CHENNAI
12	259383	1693/CHENP/2007	25/10/2005	25/10/2004	PROCESS FOR THE PREPARATION OF HIGHLY PURIFIED, DIALKYL PHOSPHINIC ACIDS	RHODIA INC.	31/08/2007	CHENNAI
13	259400	2366/CHE/2007	18/10/2007	20/10/2006	AN AMINE-EPOXY COMPOSITION FOR LOW TEMPERATURE CURE APPLICATIONS	AIR PRODUCTS AND CHEMICALS, INC.	11/09/2009	CHENNAI
14	259402	3967/CHENP/2007	06/03/2006	11/03/2005	METHOD FOR IDENTIFICATION OF PHARMACEUTICAL SUBSTANCES USING MGC4504 PROTEIN	SANOFI-AVENTIS	23/11/2007	CHENNAI
15	259420	3676/CHENP/2008	26/12/2006	26/12/2005	METHOD FOR EXTRACTING METHACRYLIC ACID	MITSUBISHI RAYON CO; LTD.	13/03/2009	CHENNAI
16	259440	4351/CHENP/2008	15/02/2007	22/02/2006	SURFACTANT MIXTURE COMPRISING SHORT-CHAIN AND LONG-CHAIN COMPONENTS	BASF SE	13/03/2009	CHENNAI

Publication Under Section 43(2) in Respect of the Grant

Following Patents have been granted and any person interested in opposing these patents under Section 25(2) may at any time within one year from the date of this issue, give notice to the Controller of Patents at the appropriate office, on the prescribed form-7 along with written statement and evidence, if any.

Serial Number	Patent Number	Application Number	Date of Application	Date of Priority	Title of Invention	Name of Patentee	Date of Publication of Abstract u/s 11(A)	Appropriate Office
1	259293	2383/KOLNP/2006	18/01/2005	23/01/2004	NOVEL INHIBITORS OF CHYMASE	JANSSEN PHARMACEUTICA N.V.	25/05/2007	KOLKATA
2	259305	3283/KOLNP/2007	13/02/2006	13/04/2005	LOSSLESS ENCODING OF INFORMATION WITH GUARANTEED MAXIMUM BITRATE	FRAUNHOFER-GESELLSCHAFT ZUR FOERDERUNG DER ANGEWANDTEN FORSCHUNG E.V.	04/01/2008	KOLKATA
3	259307	1558/KOLNP/2006	14/06/2005	16/06/2004	APPARATUS FOR PROCESSING MAC PROTOCOL DATA UNIT IN COMMUNICATION SYSTEM	LG ELECTRONICS, INC.	04/05/2007	KOLKATA
4	259310	590/KOLNP/2007	08/07/2005	27/08/2004	ADAPTIVE POWER CONTROL METHOD FOR CELLULAR SYSTEMS	MOTOROLA MOBILITY, INC.	06/07/2007	KOLKATA
5	259314	994/KOL/2005	02/11/2005	10/11/2004	BATTERY FOR MOBILE COMMUNICATION TERMINAL	LG ELECTRONICS INC.	10/08/2007	KOLKATA
6	259315	1496/KOL/2007	01/11/2007	14/12/2006	AN EXHAUST AFTER-TREATMENT SYSTEM OF A VEHICLE AND A METHOD OF EXTENDING EMISSIONS PERFORMANCE OF AN EXHAUST AFTER-TERATMENT SYSTEM	GM GLOBAL TECHNOLOGY OPERATIONS, INC.	10/04/2009	KOLKATA
7	259316	539/KOLNP/2007	03/08/2005	10/08/2004	MODIFYING POWDER FOR IMPROVING VARIOUS PROPERTIES OF PRODUCTS, FLUID COMPOSTION CONTAINING SUCH POWDER, FORMED ARTICLE WITH SUCH POWDER AND METHOD FOR PRODUCING THE MODIFYING POWDER	IDEMITSU TECHNOFINE CO., LTD.	06/07/2007	KOLKATA
8	259320	4440/KOLNP/2007	11/05/2006	13/05/2005	STABLIZER MOLECULE-ENRICHED ALBUMIN SOLUTION	ALBUTEC GMBH	02/01/2009	KOLKATA

9	259331	1033/KOLNP/2007	30/09/2005	30/09/2004	METHOD FOR OUTPUTTING MEASURED VALUES AND DISPLAY DEVICE	IMMOBILIENGESELLSCHAFT HELMUT FISCHER GMBH & CO. KG.	13/07/2007	KOLKATA
10	259332	125/KOLNP/2008	14/07/2006	19/07/2005	CATALYST WITHDRAWAL APPARATUS FOR REGULATING CATALYST INVENTORY IN A FLUID CATALYST CRACKING UNIT	INTERCAT EQUIPMENT INC.	12/09/2008	KOLKATA
11	259343	3690/KOLNP/2007	28/03/2006	31/03/2005	METHOD FOR STORAGE OF INDIVIDUAL DATA ITEMS OF A LOW-VOLTAGE CIRCUIT BREAKER	SIEMENS AKTIENGESELLSCHAFT	27/06/2008	KOLKATA
12	259346	599/KOLNP/2008	21/07/2006	29/07/2005	METHOD FOR SHAPING THE SPECTRUM OF REMOTE ACCESS DEVICE OUTPUT SIGNAL AND REMOTE ACCESS DEVICE	HUAWEI TECHNOLOGIES CO., LTD.	08/08/2008	KOLKATA
13	259350	3877/KOLNP/2008	29/03/2006	29/03/2006	A FIELD DEVICE FOR POWER SUPPLY INSTALLATIONS	SIEMENS AKTIENGESELLSCHAFT	27/02/2009	KOLKATA
14	259353	1972/KOLNP/2006	14/01/2005	16/01/2004	A GRADING APPARATUS	STYLE EHF	18/05/2007	KOLKATA
15	259354	2435/KOLNP/2008	25/10/2006	21/11/2005	3,6-DIHYDRO-2-OXO-6H-1,3,4-THIADIAZINES DERIVATIVES	MERCK PATENT GMBH	30/01/2009	KOLKATA
16	259356	3450/KOLNP/2008	15/02/2007	21/02/2006	OPTICAL RECORDING MEDIUM AND METHOD FOR MANUFACTURING THE SAME	RICOH COMPANY, LTD.	13/02/2009	KOLKATA
17	259357	843/KOLNP/2008	25/08/2006	25/08/2005	PROCESS FOR PRODUCTION OF OPTICALLY ACTIVE (S OR R)-α-AMINO ACID OR OPTICALLY ACTIVE (S OR R)-α-AMINO ACID ESTER	UBE INDUSTRIES, LTD.	28/11/2008	KOLKATA
18	259365	1500/KOLNP/2003	24/05/2002	25/05/2001	A METHOD OF DETECTING AN ERROR IN A DATA RECEIVED FROM A MEMORY OF A REPLACEABLE PRINTER COMPONENT	HEWLETT-PACKARD DEVELOPMENT COMPANY, L.P.	17/03/2006	KOLKATA
19	259369	264/KOLNP/2008	20/06/2006	29/06/2005	SELF-CLIMBING FORMWORK AND/OR SELF-CLIMBING SCAFFOLD UNIT WITH A CLIMBING CYLINDER	PERI GMBH	19/09/2008	KOLKATA

20	259371	178/KOL/2008	30/01/2008	06/02/2007	METHOD OF MONITORING OIL PRESSURE AND SYSTEM FOR ADAPTIVE OIL PRESSURE FAULT DETECTION THEREOF	GM GLOBAL TECHNOLOGY OPERATIONS, INC.	22/08/2008	KOLKATA
21	259373	3349/KOLNP/2006	12/08/2005	13/08/2004	A METHOD OF CONTROLLING A USER EQUIPMENT (UE) CAPABLE OF RECEIVING A POINT-TO-MULTIPOINT SERVICE	LG ELECTRONICS INC.	15/06/2007	KOLKATA
22	259384	2589/KOLNP/2006	10/03/2005	10/03/2004	A DISPENSING DEVICE EG. AN INHALER FOR DISPENSING OF A DOSE OF A MEDICAMENT	GLAXO GROUP LIMITED	01/06/2007	KOLKATA
23	259398	4129/KOLNP/2007	31/05/2006	30/06/2005	SYNTHESIS OF DEOXYBIOTINYL HEXAMETHYLENEDIAMINE-DOTA	SIGMA-TAU INDUSTRIE FARMACEUTICHE RIUNITE S.P.A.	28/03/2008	KOLKATA
24	259419	602/KOLNP/2005	12/09/2003	12/09/2002	A CATALYST ACTIVATOR VESSEL FOR HEAT CONDITIONING A CATALYST	CHEVRON PHILLIPS CHEMICAL COMPANY, L.P.,	24/02/2006	KOLKATA
25	259426	3034/KOLNP/2006	18/05/2005	18/05/2004	METHOD OF FABRICATING A SEMICONDUCTOR DEVICE	QUCOR PTY LTD.	08/06/2007	KOLKATA
26	259434	429/KOL/2007	21/03/2007		PROCESS FOR ISOLATING GLYCOPROTEIN FROM NEEM LEAF AND ITS CHARACTERIZATION TO DEFINE THE IMUNOMODULATORY AND CANCER PREVENTIVE FUNCTIONS OF THIS GLYCOPROTEIN	RATHINDRANATH BARAL, SUBRATA LASKAR, ANAMIKA BOSE, KOUSTAV SARKAR	30/05/2008	KOLKATA
27	259435	731/KOLNP/2006	22/10/2004	18/11/2003	FUNCTIONL PASTE	MERCK PATENT GMBH	03/08/2007	KOLKATA
28	259438	1113/KOL/2008	26/06/2008	30/07/2007	DOUBLE ENDED INVERTER SYSTEM WITH AN IMPEDANCE SOURCE INVERTER SUBSYSTEM	GM GLOBAL TECHNOLOGY OPERATIONS, INC.	24/04/2009	KOLKATA
29	259439	3452/KOLNP/2006	06/06/2005	04/06/2004	FLOW RATE SENSOR.	VSE VOLUMENTECHNIK GMBH	15/06/2007	KOLKATA
30	259442	1328/KOL/2007	26/09/2007		A METHOD FOR MANUFACTURING 12 VOLT,120 WATT PHOTOVOLTAIC (PV) MODULES INCORPORATING 108 HALF-CUT,125 MM MONO CRYSTALLINE SILICON SOLAR CELLS	BHARAT HEAVY ELECTRICALS LIMITED	10/04/2009	KOLKATA

31	259445	836/KOLNP/2008	17/08/2006	31/08/2005	METHOD AND ARRANGEMENT FOR LOCATING A MOBILE TERMINAL IN A MULTICELL RADIO ARRANGEMENT	SIEMENS AKTIENGESELLSCHAFT	21/11/2008	KOLKATA
32	259446	237/KOLNP/2007	11/08/2005	02/09/2004	CONNECTING ELEMENT FOR CONNECTING TWO SERVICE DEVICES ARRANGED WITH THEIR BROAD SIDES NEXT TO ONE ANOTHER	ABB PATENT GMBH	29/06/2007	KOLKATA
33	259447	4861/KOLNP/2007	30/06/2006	08/07/2005	COMBINATION COMPOSITION COMPRISING L-CARNITINE OR ALKANOYL L-CARNITINE, LIPID SOLUBLE BENZOQUINONE AND OMEGA-3-POLYUNSATURATED FATTY ACID	SIGMA-TAU INDUSTRIE FARMACEUTICHE RIUNITE S.P.A.	18/07/2008	KOLKATA
34	259448	1090/KOL/2007	06/08/2007 15:55:18		METHOD OF MANUFACTURE OF MULTI-STRIPED SANDWITCH BISCUITS AND SYSTEM THEREOF	BRITANNIA INDUSTRIES LIMITED	10/04/2009	KOLKATA
35	259449	144/KOL/2008	23/01/2008	06/02/2007	ENGINE WITH ATTACHED AXIAL GAP TYPE ROTATING ELECTRIC MACHINE	YAMAHA HATSUDOKI KABUSHIKI KAISHA	15/08/2008	KOLKATA
36	259450	1513/KOL/2007	02/11/2007	20/11/2006	A MONITORING SYSTEM AND A METHOD OF DIAGNOSING A CATALYTIC CONVERTER	GM GLOBAL TECHNOLOGY OPERATIONS, INC	11/07/2008	KOLKATA
37	259451	2015/KOLNP/2005	21/04/2004	22/04/2003	ELECTRONIC CONTROL SYSTEM FOR A DOOR LATCH RELEASE MECHANISM AND METHOD FOR CONTROLLING THE SAME	TOUCHSENSOR TECHNOLOGIES, LLC	13/10/2006	KOLKATA
38	259452	3181/KOLNP/2006	31/05/2005	31/05/2004	METHOD AND APPARATUS FOR TRANSMITTING UPLINK ACKNOWLEDGEMENT INFORMATION IN AN OFDMA COMMUNICATION SYSTEM	SAMSUNG ELECTRONICS CO. LTD.	08/06/2007	KOLKATA
39	259453	2468/KOLNP/2007	20/07/2005	22/12/2004	LIGHT EMITTING DEVICE.	SEOUL SEMICONDUCTOR CO., LTD.	24/08/2007	KOLKATA

CONTINUED TO PART- 2

CONTINUED FROM PART- 1

INTRODUCTION

In view of the recent amendment made in the Designs (Amendment) Rules, 2008 with effect from 17/06/2008, Publication of the matter relating to Designs is being published in the Official Journal of The Patent Office. This Journal is being published on weekly basis on every Friday covering the various proceedings on Designs as required according to the provisions of under Rule 22, 25, 27 and 39 of the Design (Amendment) Rules, 2008. All the enquiries on this Official Journal and other information as required by the public should be addressed to the Controller General of Patents, Designs & Trade Marks. Suggestions and comments are requested from all quarters so that the content can be enriched.

COPYRIGHT PUBLICATION

SL NO	CASE NUMBERS	RENEWED ON
1.	194993	18.02.2014
2.	194994	18.02.2014
3.	194996	18.02.2014
4.	194997	18.02.2014
5.	194998	18.02.2014
6.	194999	18.02.2014
7.	224910	17.02.2014
8.	224911	17.02.2014
9.	224912	17.02.2014
10.	224913	17.02.2014
11.	224915	17.02.2014
12.	224916	17.02.2014
13.	224917	17.02.2014
14.	224918	17.02.2014
15.	229468	17.02.2014
16.	240955	18.02.2014
17.	240957	18.02.2014
18.	240958	18.02.2014
19.	245771	18.02.2014
20.	245772	18.02.2014
21.	249795	17.02.2014
22.	249796	17.02.2014
23.	251494	17.02.2014
24.	195499	19.02.2014
25.	195500	19.02.2014
26.	196366	19.02.2014
27.	196367	19.02.2014
28.	196365	19.02.2014
29.	194831	19.02.2014
30.	194825	19.02.2014
31.	192321	19.02.2014
32.	192322	19.02.2014
33.	195524	19.02.2014
34.	240952	19.02.2014
35.	245358	19.02.2014
36.	247174	19.02.2014
37.	247175	19.02.2014
38.	249368	19.02.2014
39.	249375	19.02.2014
40.	249820	19.02.2014

CANCELLATION PROCEEDINGS
under Section 19 of the Designs Act, 2000

"The Asstt. Controller of Patents & Designs passed an order on 11/3/2014 to cancel the registration of registered Design No. 183512 **dated 25/9/2000 under Class 1 for the article 'Oil Container' in the name of Sureka Trading Co., 84P, Bhairav Dutta Lane, Howrah – 711106, an Indian partnership firm whose partners are Narendra Kumar & Mr. Kailash Kumar of the above address "**

THE DESIGNS ACT 2000
SECTION 30
DESIGN ASSIGNMENT

The Design stands in the name of SOCIETE DE TECHNOLOGIE MICHELIN (CO-PROPRIETOR) registered under the Designs Act, 2000 has been assigned in the Register of Designs in the name as follows:-

Design Nos.	Class	Name
202087	12-15	COMPAGNIE GENERALE DES ETABLISSEMENTS MICHELIN, A FRENCH COMPANY OF 12 COURS SABLON-F-63000, CLERMONT-FERRAND, FRANCE

REGISTRATION OF DESIGNS

The following designs have been registered. They are now open for public inspection. In the following each entry the Date of Registration is shown. The Priority Number, Priority Date and Priority Country are also shown

DESIGN NUMBER	255549	
CLASS	02-04	
1)THAIKATTIL JOSE, THAIKATTIL HOUSE, OLLUKARA P.O., THRISSUR, KERALA STATE, 680655, INDIA, AN INDIAN NATIONAL		
DATE OF REGISTRATION	30/07/2013	
TITLE	FOOTWEAR	
PRIORITY NA		
DESIGN NUMBER	255649	
CLASS	08-06	
1)DILIPBHAI BACHUBHAI HIRPARA (INDIAN NATIONALS) AND SOLE PROPRIETOR OF JANKI DIE-CAST (INDIAN PROPRIETORSHIP CONCERN) HAVING PLACE OF BUSINESS AT-PLOT NO. 834, AJI INDUSTRIAL AREA, NR; SITARAM WAY BRIDGE, OPP: MUNICIPAL WORKSHOP, BHAVNAGAR ROAD, RAJKOT-GUJARAT (INDIA)		
DATE OF REGISTRATION	06/08/2013	
TITLE	HANDLE	
PRIORITY NA		
DESIGN NUMBER	256931	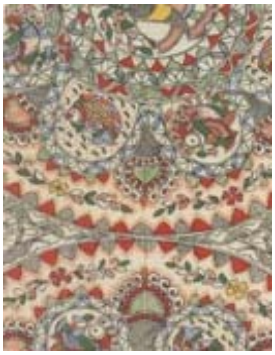
CLASS	05-05	
1)M/S. BIBA APPARELS PRIVATE LIMITED, AN INDIAN PRIVATE LIMITED COMPANY INCORPORATED UNDER THE PROVISION OF THE COMPANIES ACT, 1956, AND HAVING ITS'S REGISTERED OFFICE AT RELIABLE HOUSE, SITUATED AT HANUMAN SILK MILL COMPOUND, KANJURMARG (WEST), OPP. HUMA MALL, MUMBAI-400078 MAHARASHTRA, INDIA		
DATE OF REGISTRATION	30/09/2013	
TITLE	TEXTILE FABRIC	
PRIORITY NA		

DESIGN NUMBER	256278
CLASS	07-99

1)BONJOUR INTERNATIONAL, A INDIAN PARTNERSHIP FIRM OF 15 UA JAWAHAR NAGAR, DELHI-110007, INDIA, WHOSE PARTNERS ARE (1) RAMAN GUPTA OF 385, DEEPALI, PITAMPURA, DELHI-110034 (2) RAJESH KUMAR GUPTA OF 384, DEEPALI, PITAMPURA, DELHI-110034 AND
(3) REENA GUPTA OF 384, DEEPALI, PITAMPURA, DELHI-110034 ALL INDIAN NATIONALS

DATE OF REGISTRATION	06/09/2013
TITLE	COVER FOR FLASK

PRIORITY NA

DESIGN NUMBER	252249
CLASS	24-02

1)BECTON, DICKINSON AND COMPANY, A COMPANY INCORPORATED UNDER THE LAWS OF THE UNITED STATES OF AMERICA, OF
1 BECTON DRIVE, FRANKLIN LAKES, NEW JERSEY 07417-1880, THE UNITED STATES OF AMERICA

DATE OF REGISTRATION	11/03/2013
TITLE	CAP FOR A CONNECTOR OF MEDICAL APPARATUS

PRIORITY

PRIORITY NUMBER	DATE	COUNTRY
29/431,791	11/09/2012	U.S.A.

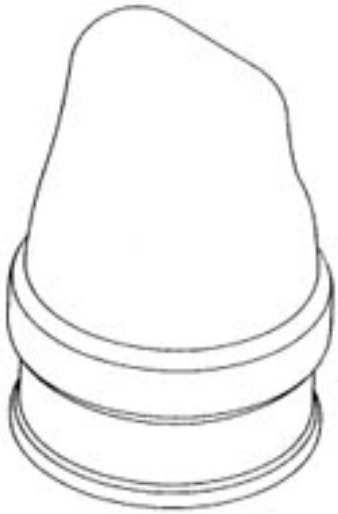

DESIGN NUMBER	256635
CLASS	04-02

1)ANCHOR HEALTH & BEAUTY CARE PVT. LTD., 201-C, WING, INNOVA MARATHON NEXT GEN., OFF G.K.MARG, OPP. PENINSULA CORPORATE PARK, LOWER PAREL (W), MUMBAI-400013. STATE OF MAHARASHTRA INDIA,
/ A PRIVATE LIMITED COMPANY INCORPORATED UNDER INDIAN COMPANIES ACT., ABOVE ADDRESS

DATE OF REGISTRATION	20/09/2013
TITLE	TOOTH BRUSH

PRIORITY NA

DESIGN NUMBER	256938	
CLASS	05-05	
1)M/S. BIBA APPARELS PRIVATE LIMITED, AN INDIAN PRIVATE LIMITED COMPANY INCORPORATED UNDER THE PROVISION OF THE COMPANIES ACT, 1956, AND HAVING ITS'S REGISTERED OFFICE AT RELIABLE HOUSE, SITUATED AT HANUMAN SILK MILL COMPOUND, KANJURMARG (WEST), OPP. HUMA MALL, MUMBAI-400078 MAHARASHTRA, INDIA		
DATE OF REGISTRATION	30/09/2013	
TITLE	TEXTILE FABRIC	
PRIORITY NA		
DESIGN NUMBER	256295	
CLASS	02-04	
1)LIBERTY SHOES LIMITED, AN INDIAN COMPANY, OF LIBERTY PURAM, 13, MILESTONE, GT KARNAL ROAD, KUTAIL, DT-KARNAL - 132001, HARYANA, INDIA		
DATE OF REGISTRATION	06/09/2013	
TITLE	SOLE FOR FOOTWEAR	
PRIORITY NA		
DESIGN NUMBER	254799	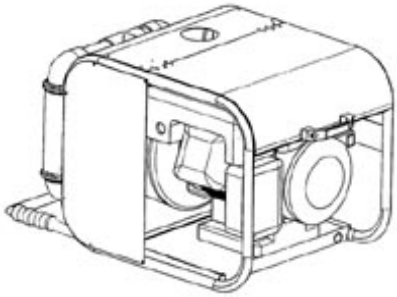
CLASS	29-01	
1)ADVANCED FIREFIGHTING TECHNOLOGY GMBH, A COMPANY DULY ORGANIZED AND EXISTING UNDER THE LAWS OF GERMANY OF HEGGENKAMP 15, 49163 BOHMTE, GERMANY		
DATE OF REGISTRATION	25/06/2013	
TITLE	FIREFIGHTING DEVICE	
PRIORITY NA		

DESIGN NUMBER	255608
CLASS	01-01
1)MOHAN BAKERS PRIVATE LIMITED, A COMPANY DULY REGISTERED UNDER THE PROVISIONS OF THE COMPANIES ACT, 1956, WHOSE ADDRESS IS 305 MANGALAM, 24 HEMANTA BASU SARANI, KOLKATA-700001, WEST BENGAL, INDIA	
DATE OF REGISTRATION	01/08/2013
TITLE	BISCUIT
PRIORITY NA	

DESIGN NUMBER	256937
CLASS	05-05
1)M/S. BIBA APPARELS PRIVATE LIMITED, AN INDIAN PRIVATE LIMITED COMPANY INCORPORATED UNDER THE PROVISION OF THE COMPANIES ACT, 1956, AND HAVING ITS'S REGISTERED OFFICE AT RELIABLE HOUSE, SITUATED AT HANUMAN SILK MILL COMPOUND, KANJURMARG (WEST), OPP. HUMA MALL, MUMBAI-400078 MAHARASHTRA, INDIA	
DATE OF REGISTRATION	30/09/2013
TITLE	TEXTILE FABRIC
PRIORITY NA	

DESIGN NUMBER	251454
CLASS	09-05
1)AVENTISUB II INC., A CORPORATION ORGANIZED UNDER THE LAWS OF THE STATES OF DELAWARE, OF 3711 KENNETT PIKE, SUITE 200 GREENVILLE, DELAWARE 19807, UNITED STATES	
DATE OF REGISTRATION	06/02/2013
TITLE	BLISTER PACKAGE

PRIORITY

PRIORITY NUMBER	DATE	COUNTRY
29429017	06/08/2012	U.S.A.

DESIGN NUMBER	255580	
CLASS	23-02	
1)DEEPAM PALM DISH, SMALL SCALE INDUSTRIAL UNIT, REGISTERED UNDER MSME ACT, WHOSE ADDRESS IS DEEPAK PALM DISH, MAPCO ROAD, ST. THOMAS STREET, KURIACHIRA, THRISSUR-6, KERALA AND NATIONALITY IS INDIAN		
DATE OF REGISTRATION	31/07/2013	
TITLE	SOAP DISH	
PRIORITY NA		

DESIGN NUMBER	256679	
CLASS	24-02	
1)SANTEN PHARMACEUTICAL CO., LTD., A JAPANESE COMPANY OF 9-19, SHIMOSHINJO 3-CHOME, HIGASHIYODOGAWA-KU, OSAKA-SHI, OSAKA 5338651, JAPAN		
DATE OF REGISTRATION	23/09/2013	
TITLE	INTRAOCULAR LENS IMPLANTATION DEVICE	
PRIORITY		

PRIORITY NUMBER	DATE	COUNTRY
2013-008901	19/04/2013	JAPAN

DESIGN NUMBER	255876	
CLASS	05-05	
1)PARRY MURRAY & CO. LTD., COMPANY REGISTERED UNDER THE LAWS OF ENGLAND AND WALES, HAVING ITS PRINCIPAL PLACE OF BUSINESS AT 3RD FLOOR, SIMPSON HOUSE, 6 CHERRY ORCHARD ROAD, CROYDON, CRO 6BA, UNITED KINGDOM		
DATE OF REGISTRATION	16/08/2013	
TITLE	TEXTILE FABRIC	
PRIORITY NA		

DESIGN NUMBER	256072
CLASS	12-16
1)MAHINDRA & MAHINDRA LTD., A COMPANY INCORPORATED UNDER THE INDIAN COMPANIES ACT, 1913 OF GATEWAY BUILDING, APOLLO BUNDER, MUMBAI 400001, MAHARASHTRA, INDIA	
DATE OF REGISTRATION	27/08/2013
TITLE	CARRIER OF A VEHICLE
PRIORITY NA	

DESIGN NUMBER	256306
CLASS	02-04
1)LIBERTY SHOES LIMITED, AN INDIAN COMPANY, OF LIBERTY PURAM, 13, MILESTONE, GT KARNAL ROAD, KUTAIL, DT-KARNAL - 132001, HARYANA, INDIA	
DATE OF REGISTRATION	06/09/2013
TITLE	SOLE FOR FOOTWEAR
PRIORITY NA	

DESIGN NUMBER	256359
CLASS	23-01
1)TOYOX CO., LTD. 4371, MAEZAWA, KUROBE-SHI, TOYAMA-KEN, JAPAN, A JAPANESE COMPANY	
DATE OF REGISTRATION	10/09/2013
TITLE	HOSE FASTENER

PRIORITY

PRIORITY NUMBER	DATE	COUNTRY
2013-005370	11/03/2013	JAPAN

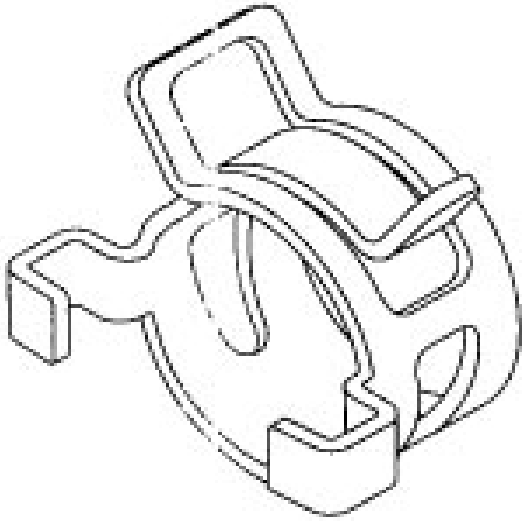

DESIGN NUMBER	256398	
CLASS	07-02	
1)MRS. SIMPLE (PROPRIETOR), NATIONALITY INDIAN TRADING AS TULIP INDUSTRIES (THIS IS A PROPRIETORSHIP FIRM) WHOES ADDRESS IS C-130, SECTOR-3, BAWANA INDUSTRIAL AREA, DELHI-110039 (INDIA)		
DATE OF REGISTRATION	13/09/2013	
TITLE	BOWL	
PRIORITY NA		

DESIGN NUMBER	255260	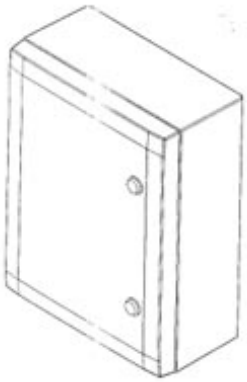
CLASS	13-03	
1)FIBOX OY AB, A COMPANY OF FINLAND OF KEILARANTA 19, FI-02150 ESPOO, FINLAND		
DATE OF REGISTRATION	16/07/2013	
TITLE	PROTECTIVE CASING FOR ELECTRICAL DEVICES	

PRIORITY

PRIORITY NUMBER	DATE	COUNTRY
002168047-0001	17/01/2013	OHIM

DESIGN NUMBER	256843	
CLASS	23-04	
1)CROMPTON GREAVES LIMITED, CG HOUSE, 6TH FLOOR, DR. ANNIE BESANT ROAD, WORLI, MUMBAI - 400030, MAHARASHTRA, INDIA; AN INDIAN COMPANY		
DATE OF REGISTRATION	26/09/2013	
TITLE	CEILING FAN	
PRIORITY NA		

DESIGN NUMBER	256309	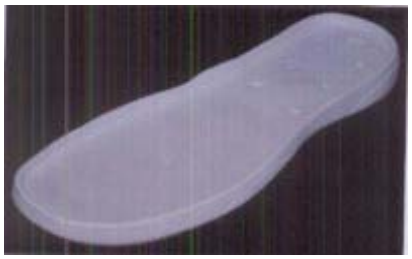
CLASS	02-04	
1)LIBERTY SHOES LIMITED, AN INDIAN COMPANY, OF LIBERTY PURAM, 13, MILESTONE, GT KARNAL ROAD, KUTAIL, DT-KARNAL - 132001, HARYANA, INDIA		
DATE OF REGISTRATION	06/09/2013	
TITLE	SOLE FOR FOOTWEAR	
PRIORITY NA		
DESIGN NUMBER	256403	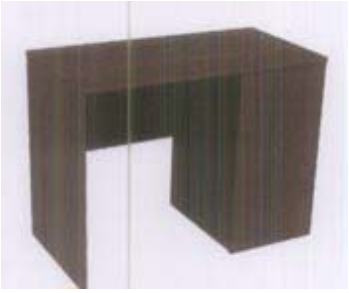
CLASS	06-03	
1)GODREJ & BOYCE MFG. CO. LTD., AN INDIAN COMPANY INCORPORATED UNDER THE COMPANIES ACT, 1913, OF GODREJ INTERIO, PLANT 4, PIROJSHANAGER, VIKHROLI (WEST), MUMBAI-400079, INDIA		
DATE OF REGISTRATION	12/09/2013	
TITLE	TABLE	
PRIORITY NA		
DESIGN NUMBER	255581	
CLASS	23-02	
1)DEEPAM PALM DISH, SMALL SCALE INDUSTRIAL UNIT, REGISTERED UNDER MSME ACT, WHOSE ADDRESS IS DEEPAK PALM DISH, MAPCO ROAD, ST. THOMAS STREET, KURIACHIRA, THRISSUR-6, KERALA AND NATIONALITY IS INDIAN		
DATE OF REGISTRATION	31/07/2013	
TITLE	SOAP DISH	
PRIORITY NA		

DESIGN NUMBER	255877
CLASS	09-01
1)SABMILLER INDIA LIMITED, AN INDIAN COMPANY, OF SOLITAIRE CORPORATE PARK 10, UNIT NO. 1021, 2ND FLOOR, SURVEY NO. 131-A, CHAKALA, ANDHERI KURLA ROAD, ANDHERI (EAST), MUMBAI 400093, MAHARASHTRA	
DATE OF REGISTRATION	16/08/2013
TITLE	BOTTLE
PRIORITY NA	

DESIGN NUMBER	256073
CLASS	12-16
1)MAHINDRA & MAHINDRA LTD., A COMPANY INCORPORATED UNDER THE INDIAN COMPANIES ACT, 1913 OF GATEWAY BUILDING, APOLLO BUNDER, MUMBAI 400001, MAHARASHTRA, INDIA	
DATE OF REGISTRATION	27/08/2013
TITLE	FRONT BUMPER OF A VEHICLE
PRIORITY NA	

DESIGN NUMBER	251334
CLASS	14-99
1)SAMSUNG ELECTRONICS CO., LTD., A KOREAN COMPANY, OF 129, SAMSUNG-RO, YEONGTONG-GU, SUWON-SI, GYEONGGI-DO, 443-742, REPUBLIC OF KOREA	
DATE OF REGISTRATION	31/01/2013
TITLE	STYLUS

PRIORITY

PRIORITY NUMBER	DATE	COUNTRY
30-2012-0041299	28/08/2012	REPUBLIC OF KOREA

DESIGN NUMBER	256307
CLASS	02-04

1)LIBERTY SHOES LIMITED, AN INDIAN COMPANY, OF
LIBERTY PURAM, 13, MILESTONE, GT KARNAL ROAD, KUTAIL, DT-KARNAL - 132001, HARYANA, INDIA

DATE OF REGISTRATION	06/09/2013
TITLE	SOLE FOR FOOTWEAR

PRIORITY NA

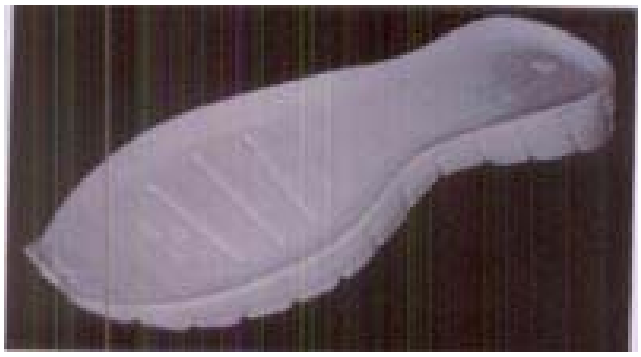

DESIGN NUMBER	256360
CLASS	23-01

1)TOYOX CO., LTD.
4371, MAEZAWA, KUROBE-SHI, TOYAMA-KEN, JAPAN, A JAPANESE COMPANY

DATE OF REGISTRATION	10/09/2013
TITLE	HOSE FASTENER

PRIORITY

PRIORITY NUMBER	DATE	COUNTRY
2013-005371	11/03/2013	JAPAN

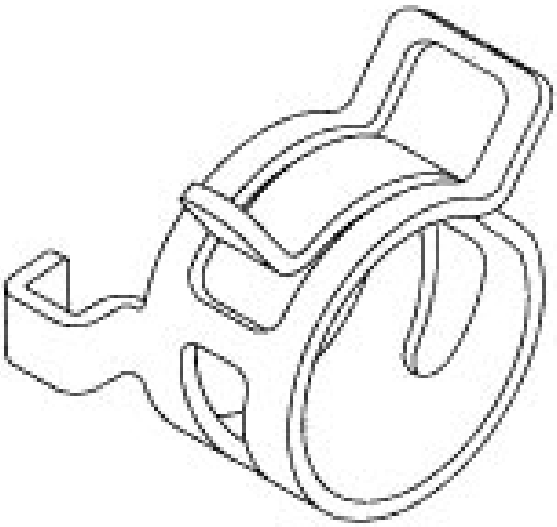

DESIGN NUMBER	254076
CLASS	12-08

1)BAYERISCHE MOTOREN WERKE AKTIENGESELLSCHAFT,
OF PETUELRING 130, 80809, MUNICH, GERMANY, A GERMAN COMPANY

DATE OF REGISTRATION	24/05/2013
TITLE	MOTOR VEHICLE

PRIORITY

PRIORITY NUMBER	DATE	COUNTRY
DE 402012101027.1	26/11/2012	GERMANY

DESIGN NUMBER	255256	
CLASS	02-04	
1)THAIKATTIL JOSE, THAIKATTIL HOUSE, OLLUKARA P.O., THRISSUR, KERALA STATE 680655, INDIA, AN INDIAN NATIONAL		
DATE OF REGISTRATION	16/07/2013	
TITLE	SHOE	
PRIORITY NA		
DESIGN NUMBER	255331	
CLASS	26-01	
1)MA DESIGN INDIA PRIVATE LIMITED, A COMPANY INCORPORATED IN INDIA HAVING ITS PRINCIPAL PLACE OF BUSINESS AT A-41, SECTOR-80, PHASE-II, NOIDA-201305, U.P. INDIA		
DATE OF REGISTRATION	18/07/2013	
TITLE	CANDLE HOLDER	
PRIORITY NA		
DESIGN NUMBER	256449	
CLASS	08-06	
1)AMITBHAI M. CHOVATIYA AND ASHISHBHAI G. GADHIYA BOTH INDIAN NATIONAL PARTNERS OF FORAM SALES CORPORATION AN INDIAN PARTNERSHIP FIRM HAVING ITS PRINCIPAL PLACE OF BUSINESS AT PLOT NO. 7, PATEL IND. AREA, OPP. RIDDHI SIDDHI PARK, NEAR SANDHIYA POOL, (KOTHARIYA), RAJKOT, GUJARAT-INDIA		
DATE OF REGISTRATION	13/09/2013	
TITLE	HANDLE	
PRIORITY NA		

DESIGN NUMBER	256074	
CLASS	26-06	
1)MAHINDRA & MAHINDRA LTD., A COMPANY INCORPORATED UNDER THE INDIAN COMPANIES ACT, 1913 OF GATEWAY BUILDING, APOLLO BUNDER, MUMBAI 400001, MAHARASHTRA, INDIA		
DATE OF REGISTRATION	27/08/2013	
TITLE	HEADLAMP OF A VEHICLE	
PRIORITY NA		
DESIGN NUMBER	256308	
CLASS	02-04	
1)LIBERTY SHOES LIMITED, AN INDIAN COMPANY, OF LIBERTY PURAM, 13, MILESTONE, GT KARNAL ROAD, KUTAIL, DT-KARNAL - 132001, HARYANA, INDIA		
DATE OF REGISTRATION	06/09/2013	
TITLE	SOLE FOR FOOTWEAR	
PRIORITY NA		
DESIGN NUMBER	256402	
CLASS	06-04	
1)GODREJ & BOYCE MFG. CO. LTD., AN INDIAN COMPANY INCORPORATED UNDER THE COMPANIES ACT, 1913, OF GODREJ INTERIO, PLANT 4, PIROJSHANAGER, VIKHROLI (WEST), MUMBAI-400079, INDIA		
DATE OF REGISTRATION	12/09/2013	
TITLE	STORAGE FURNITURE	
PRIORITY NA		

DESIGN NUMBER	255576
CLASS	26-02
1)EVEREADY INDUSTRIES INDIA LTD. 1, MIDDLETON STREET, KOLKATA-700071, WEST BENGAL, INDIA, AN INDIAN COMPANY	
DATE OF REGISTRATION	31/07/2013
TITLE	FLASHLIGHT
PRIORITY NA	

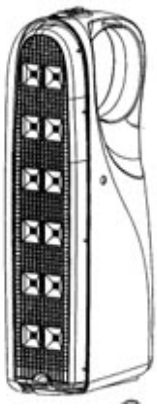

DESIGN NUMBER	251970
CLASS	01-01
1)FRIO-LAY NORTH AMERICA, INC., INCORPORATED IN THE STATE OF DELAWARE OF 7701 LEGACY DRIVE, PLANO, TEXAS 75024-4099, UNITED STATES OF AMERICA	
DATE OF REGISTRATION	01/03/2013
TITLE	BAKERS PRODUCT

PRIORITY

PRIORITY NUMBER	DATE	COUNTRY
29/431,378	06/09/2012	U.S.A.

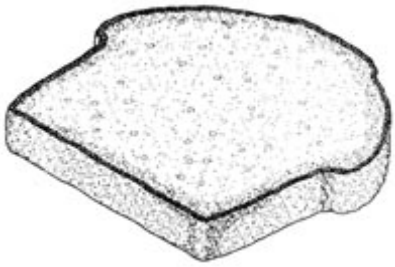

DESIGN NUMBER	256302
CLASS	02-04
1)LIBERTY SHOES LIMITED, AN INDIAN COMPANY, OF LIBERTY PURAM, 13, MILESTONE, GT KARNAL ROAD, KUTAIL, DT-KARNAL - 132001, HARYANA, INDIA	
DATE OF REGISTRATION	06/09/2013
TITLE	SOLE FOR FOOTWEAR
PRIORITY NA	

DESIGN NUMBER	256395
CLASS	09-03

1)ITC LIMITED, AN INDIAN COMPANY WITHIN THE MEANING OF THE COMPANIES ACT, 1956 OF
VIRGINIA HOUSE, 37, J. L. NEHRU ROAD, KOLKATA – 700 071, WEST BENGAL, INDIA.

DATE OF REGISTRATION	12/09/2013
TITLE	CIGARETTE PACK

PRIORITY NA

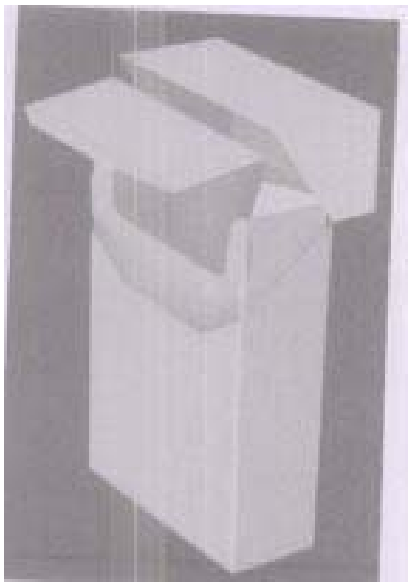

DESIGN NUMBER	253626
CLASS	23-03

1)MR. DHITI TOWIWAT A CITIZEN OF THAILAND OF THE ADDRESS:
163/71, PHAHONYOTHIN 32, KHWAENG LAT YAO, KHET CHATUCHAK, BANGKOK, THAILAND

DATE OF REGISTRATION	02/05/2013
TITLE	HEAT EXCHANGER

PRIORITY

PRIORITY NUMBER	DATE	COUNTRY
1202002953	08/11/2012	THAILAND

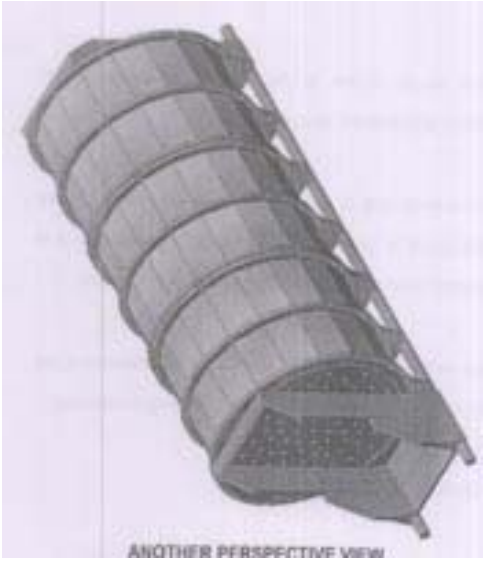

DESIGN NUMBER	255145
CLASS	12-16

1)VOLVO TRUCK CORPORATION,
OF 405 08 GÖTEBORG, SWEDEN

DATE OF REGISTRATION	11/07/2013
TITLE	FENDER FOR VEHICLES

PRIORITY

PRIORITY NUMBER	DATE	COUNTRY
002179424-0004	06/02/2013	OHIM

DESIGN NUMBER	255305	
CLASS	11-02	
1)MA DESIGN INDIA PRIVATE LIMITED, A COMPANY INCORPORATED IN INDIA HAVING ITS PRINCIPAL PLACE OF BUSINESS AT A-41, SECTOR-80, PHASE-II, NOIDA-201305, U.P. INDIA		
DATE OF REGISTRATION	18/07/2013	
TITLE	VASE	
PRIORITY NA		

DESIGN NUMBER	255398	
CLASS	11-02	
1)VIPIN JAIN AN INDIAN NATIONAL GOKUL INTERNATIONAL, GALA NO. 2 ROOPAL INDUSTRIAL ESTATE, H.P. GAS GODOWN GALLI, BHAYANDAR EAST, THANE-401105		
DATE OF REGISTRATION	25/07/2013	
TITLE	FLOWER VASE	
PRIORITY NA		

DESIGN NUMBER	251941	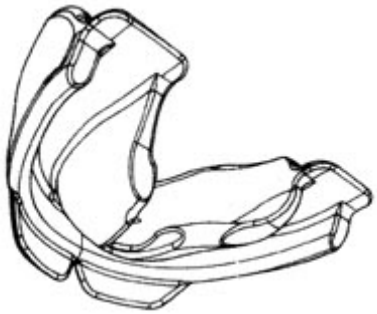
CLASS	24-99	
1)CHRISTOPHER JOHN FARRELL, AUSTRALIAN NATIONAL, OF 44 SIGANTO DRIVE HELENSVALE QLD 4212, AUSTRALIA		
DATE OF REGISTRATION	28/02/2013	
TITLE	ORTHODONTIC APPLIANCE	

PRIORITY

PRIORITY NUMBER	DATE	COUNTRY
AU 143331/2012	31/08/2012	AUSTRALIA

DESIGN NUMBER	256940	
CLASS	05-05	
1)M/S. BIBA APPARELS PRIVATE LIMITED, AN INDIAN PRIVATE LIMITED COMPANY INCORPORATED UNDER THE PROVISION OF THE COMPANIES ACT, 1956, AND HAVING ITS'S REGISTERED OFFICE AT RELIABLE HOUSE, SITUATED AT HANUMAN SILK MILL COMPOUND, KANJURMARG (WEST), OPP. HUMA MALL, MUMBAI-400078 MAHARASHTRA, INDIA		
DATE OF REGISTRATION	30/09/2013	
TITLE	TEXTILE FABRIC	
PRIORITY NA		
DESIGN NUMBER	256215	
CLASS	02-04	
1)DHEERAJ FOOT CRAFT INDIA PVT. LTD (DULY INCORPORATED UNDER THE PROVISION OF THE COMPANY ACT, 1956) AT 103, SECTOR-3, HSIIDC, KARNAL-132001 (HARYANA), WHOSE DIRECTOR IS MANISH BHANDARI, OF THE ABOVE ADDRESS		
DATE OF REGISTRATION	04/09/2013	
TITLE	SOLE OF FOOTWEAR	
PRIORITY NA		
DESIGN NUMBER	254412	
CLASS	12-16	
1)KRIPALSINH DILIPSINH JADEJA TRADING AS ROGER MOTORS, NATIONALITY INDIA, ADDRESS AT GONDAL ROAD, NEAR RAJKAMAL PETROL PUMP, RAJKOT 360004, GUJARAT, INDIA		
DATE OF REGISTRATION	10/06/2013	
TITLE	SUSPENSION ABSORBER	
PRIORITY NA		

DESIGN NUMBER	251145
CLASS	14-02
1)COOLER MASTER CO., LTD, A COMPANY INCORPORATED UNDER THE LAWS OF CHINA, HAVING ITS OFFICE AT 9F., NO. 778-1, ZHONGZHENG RD., ZHONGHE DIST., NEW TAIPEI CITY 235, TAIWAN (R.O.C.)	
DATE OF REGISTRATION	23/01/2013
TITLE	COOLING PAD (FOR ELECTRONIC DEVICES)

PRIORITY

PRIORITY NUMBER	DATE	COUNTRY
201230478692.2	09/10/2012	CHINA

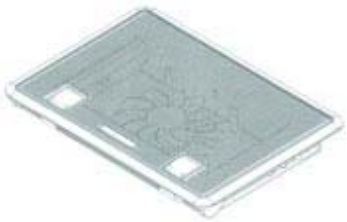

DESIGN NUMBER	255208
CLASS	23-01
1)SHREEJEE PLASTICS, F-266, POCET-F, SECTOR-3, DSIIDC, BAWANA INDUSTRIAL AREA, BAWANA, DELHI-110049, INDIA. (AN INDIAN PROPRIETORSHIP FIRM WHOSE PROPRIETOR IS:- SUNIL AGGARWAL. AN INDIAN NATIONAL OF THE ABOVE ADDRESS	
DATE OF REGISTRATION	12/07/2013
TITLE	WATER FILTER
PRIORITY NA	

DESIGN NUMBER	255363
CLASS	15-99
1)GREIF INTERNATIONAL HOLDING BV, A DUTCH COMPANY OF BERGSEWEG 6, VREELAND 3633AK, NETHERLANDS	
DATE OF REGISTRATION	22/07/2013
TITLE	AGITATOR ASSEMBLY

PRIORITY

PRIORITY NUMBER	DATE	COUNTRY
29/443,772	22/01/2013	U.S.A.

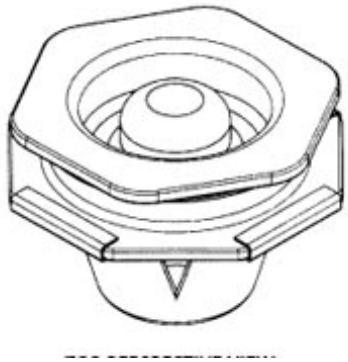

DESIGN NUMBER	256101
CLASS	13-03
1)LARSEN & TOUBRO LIMITED, AN INDIAN COMPANY INCORPORATED UNDER THE COMPANIES ACT, 1956 OF L & T HOUSE, BALLARD ESTATE, MUMBAI 400 001, STATE OF MAHARASHTRA, INDIA	
DATE OF REGISTRATION	28/08/2013
TITLE	TWO POLE CONTACTOR
PRIORITY NA	

DESIGN NUMBER	256918
CLASS	05-05
1)M/S. BIBA APPARELS PRIVATE LIMITED, AN INDIAN PRIVATE LIMITED COMPANY INCORPORATED UNDER THE PROVISION OF THE COMPANIES ACT, 1956, AND HAVING ITS'S REGISTERED OFFICE AT RELIABLE HOUSE, SITUATED AT HANUMAN SILK MILL COMPOUND, KANJURMARG (WEST), OPP. HUMA MALL, MUMBAI-400078 MAHARASHTRA, INDIA	
DATE OF REGISTRATION	30/09/2013
TITLE	TEXTILE FABRIC
PRIORITY NA	

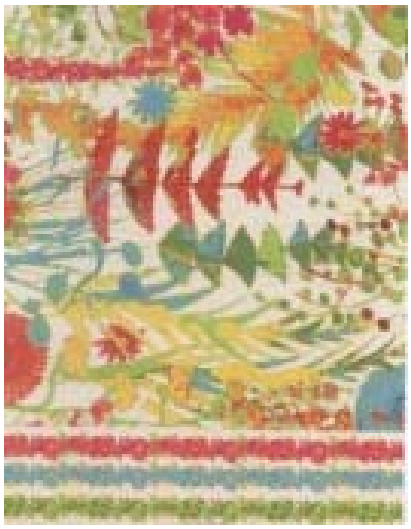

DESIGN NUMBER	255697
CLASS	09-01
1)JOHN DISTILLERIES PVT LTD. INDIAN NATIONAL 110, PANTHARPALYA, MYSORE ROAD, BANGALORE-560039, KARNATAKA, INDIA	
DATE OF REGISTRATION	07/08/2013
TITLE	BOTTLE
PRIORITY NA	

DESIGN NUMBER	251713
CLASS	09-01
1)FRIENDSHIP PRODUCTS LLC, INCORPORATED UNDER THE LAWS OF STATE OF CALIFORNIA, U.S.A., OF THE ADDRESS 7401 S. SEPULVEDA BLVD. # 116, LOS ANGELES, CALIFORNIA, 90045, UNITED STATES OF AMERICA	
DATE OF REGISTRATION	18/02/2013
TITLE	CONTAINER

PRIORITY

PRIORITY NUMBER	DATE	COUNTRY
29/422,261	17/08/2012	U.S.A.

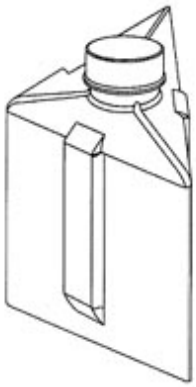

DESIGN NUMBER	256058
CLASS	15-04
1)JITENDRAKUMAR N. NAIK AN INDIVIDUAL-INDIAN RESIDENT OF, PLOT NO.-5101, ROAD NO.-5, G.I.D.C., SACHIN-394230, SURAT INDIA	
DATE OF REGISTRATION	27/08/2013
TITLE	CLAY BRICK MACHINE
PRIORITY NA	

DESIGN NUMBER	256303
CLASS	02-04
1)LIBERTY SHOES LIMITED, AN INDIAN COMPANY, OF LIBERTY PURAM, 13, MILESTONE, GT KARNAL ROAD, KUTAIL, DT-KARNAL - 132001, HARYANA, INDIA	
DATE OF REGISTRATION	06/09/2013
TITLE	SOLE FOR FOOTWEAR
PRIORITY NA	

DESIGN NUMBER	256396
CLASS	09-03
1)ITC LIMITED, AN INDIAN COMPANY WITHIN THE MEANING OF THE COMPANIES ACT, 1956 OF VIRGINIA HOUSE, 37, J. L. NEHRU ROAD, KOLKATA - 700071, WEST BENGAL, INDIA	
DATE OF REGISTRATION	12/09/2013
TITLE	CIGARETTE PACK
PRIORITY NA	

DESIGN NUMBER	255075
CLASS	12-15
1)COMPAGNIE GENERALE DES ETABLISSEMENTS MICHELIN, A FRENCH COMPANY OF 12 COURS SABLON, FR-63000, CLERMONT-FERRAND, FRANCE, AND MICHELIN RECHERCHE ET TECHNIQUE S.A., A SWISS COMPANY OF ROUTE LOUIS- BRAILLE 10 - CH-1763 GRANGES-PACCOT, SWITZERLAND	
DATE OF REGISTRATION	09/07/2013
TITLE	TYRE

PRIORITY

PRIORITY NUMBER	DATE	COUNTRY
13/0314	11/01/2013	FRANCE

DESIGN NUMBER	256909
CLASS	05-05
1)M/S. BIBA APPARELS PRIVATE LIMITED, AN INDIAN PRIVATE LIMITED COMPANY INCORPORATED UNDER THE PROVISION OF THE COMPANIES ACT, 1956, AND HAVING ITS'S REGISTERED OFFICE AT RELIABLE HOUSE, SITUATED AT HANUMAN SILK MILL COMPOUND, KANJURMARG (WEST), OPP. HUMA MALL, MUMBAI-400078 MAHARASHTRA, INDIA	
DATE OF REGISTRATION	30/09/2013
TITLE	TEXTILE FABRIC
PRIORITY NA	

DESIGN NUMBER	256582
CLASS	12-15
1)TVS SRICHAKRA LIMITED, AN INDIAN COMPANY, 7B, WEST VELI STREET, MADURAI 625 001, TAMIL NADU, INDIA	
DATE OF REGISTRATION	18/09/2013
TITLE	TYRE
PRIORITY NA	

DESIGN NUMBER	255794
CLASS	23-04
1)DAIKIN INDUSTRIES LTD. A JAPANESE COMPANY OF THE ADDRESS: UMEDA CENTER BUILDING, 4-12 NAKAZAKI-NISHI 2-CHOME, KITA-KU, OSAKA-SHI, OSAKA-FU, JAPAN	
DATE OF REGISTRATION	13/08/2013
TITLE	AIR CONDITIONER
PRIORITY NA	

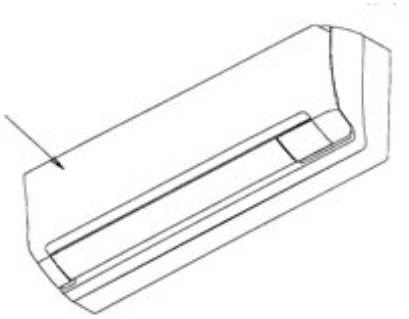

DESIGN NUMBER	256702
CLASS	12-11
1)HONDA MOTOR CO., LTD., A JAPANESE CORPORATION, OF 1-1, MINAMI-AOYAMA 2-CHOME, MINATO-KU, TOKYO, 107-8556, JAPAN	
DATE OF REGISTRATION	24/09/2013
TITLE	MOTORCYCLE

PRIORITY

PRIORITY NUMBER	DATE	COUNTRY
2013-006815	27/03/2013	JAPAN

DESIGN NUMBER	256094
CLASS	12-16
1)MAHINDRA & MAHINDRA LTD., A COMPANY INCORPORATED UNDER THE INDIAN COMPANIES ACT, 1913 OF GATEWAY BUILDING, APOLLO BUNDER, MUMBAI 400001, MAHARASHTRA, INDIA	
DATE OF REGISTRATION	28/08/2013
TITLE	FRONT GRILLE OF A VEHICLE
PRIORITY NA	

DESIGN NUMBER	256897
CLASS	08-06
1)SANVI ENTERPRISE, AN INDIAN ENTITY HAVING ITS PRINCIPAL PLACE OF BUSINESS AT NATIONAL HIGHWAY 8-B, OPP. PARIN FURNITURE, KOTHARIYA SOLVENT AREA, NEAR DHOKIYA MOTORS, KOTHARIYA, DIST: RAJKOT-360004, GUJARAT, INDIA	
DATE OF REGISTRATION	30/09/2013
TITLE	CABINET HANDLE
PRIORITY NA	

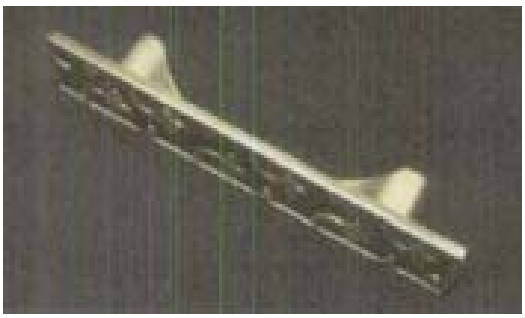

DESIGN NUMBER	257043
CLASS	05-05
1)M/S. BIBA APPARELS PRIVATE LIMITED, AN INDIAN PRIVATE LIMITED COMPANY INCORPORATED UNDER THE PROVISION OF THE COMPANIES ACT, 1956, AND HAVING ITS'S REGISTERED OFFICE AT RELIABLE HOUSE, SITUATED AT HANUMAN SILK MILL COMPOUND, KANJURMARG (WEST), OPP. HUMA MALL, MUMBAI-400078 MAHARASHTRA, INDIA	
DATE OF REGISTRATION	30/09/2013
TITLE	TEXTILE FABRIC
PRIORITY NA	

DESIGN NUMBER	256314	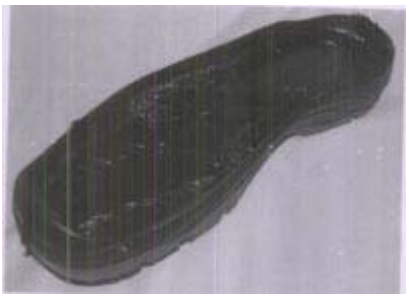
CLASS	02-04	
1)LIBERTY SHOES LIMITED, AN INDIAN COMPANY, OF LIBERTY PURAM, 13, MILESTONE, GT KARNAL ROAD, KUTAIL, DT-KARNAL - 132001, HARYANA, INDIA		
DATE OF REGISTRATION	06/09/2013	
TITLE	SOLE FOR FOOTWEAR	
PRIORITY NA		

DESIGN NUMBER	251943	
CLASS	24-01	
1)GENERAL ELECTRIC COMPANY, A NEW YORK CORPORATION INCORPORATED UNDER THE LAWS OF UNITED STATES OF AMERICA HAVING ITS OFFICE AT 1 RIVER ROAD, SCHENECTADY, NEW YORK 12345 UNITED STATES OF AMERICA		
DATE OF REGISTRATION	28/02/2013	
TITLE	BALANCE OF PLANT ONLINE RACK AND MODULE ASSEMBLY	
PRIORITY NA		

DESIGN NUMBER	256941	
CLASS	05-05	
1)M/S. BIBA APPARELS PRIVATE LIMITED, AN INDIAN PRIVATE LIMITED COMPANY INCORPORATED UNDER THE PROVISION OF THE COMPANIES ACT, 1956, AND HAVING ITS'S REGISTERED OFFICE AT RELIABLE HOUSE, SITUATED AT HANUMAN SILK MILL COMPOUND, KANJURMARG (WEST), OPP. HUMA MALL, MUMBAI-400078 MAHARASHTRA, INDIA		
DATE OF REGISTRATION	30/09/2013	
TITLE	TEXTILE FABRIC	
PRIORITY NA		

DESIGN NUMBER	256217	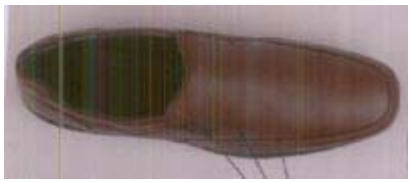
CLASS	02-04	
1)VIROLA SHOE PVT. LTD (COMPANY DULY INCORPORATED UNDER THE COMPANIES ACT) HAVING ITS OFFICE AT 21/68, FREEGANJ, AGRA (U.P.) INDIA, OF THE ABOVE ADDRESS		
DATE OF REGISTRATION	04/09/2013	
TITLE	SHOE	
PRIORITY NA		
DESIGN NUMBER	255262	
CLASS	26-03	
1)HAVELLS INDIA LIMITED HAVING REGISTERED OFFICE AT 1, RAJ NARAIN MARG, CIVIL LINES, DELHI 110054.		
DATE OF REGISTRATION	16/07/2013	
TITLE	LUMINAIRE	
PRIORITY NA		
DESIGN NUMBER	255587	
CLASS	08-06	
1)KAPILBHAI BALVANTRAI VYAS AND JIGNESHBHAI CHHAGANBHAI GOHEL BOTH INDIAN NATIONAL PARTNER OF RATNAPRABHA HARDWARE AN INDIAN PARTNERSHIP FIRM HAVING ITS PRINCIPAL PLACE OF BUSINESS AT ADDRESS:- 6, PARSANA SOCIETY, 50 FEET ROAD, KOTHARIYA MAIN ROAD, RAJKOT-2. GUJARAT-INDIA		
DATE OF REGISTRATION	01/08/2013	
TITLE	HANDLE	
PRIORITY NA		

DESIGN NUMBER	256687	
CLASS	08-06	
1)MAHESHBHAI SHIVALALBHAI GAJERA AN INDIAN NATIONAL SOLE PROPRIETOR OF SHREE HARIKRUPA DIE CASTING AN INDIAN PROPRIETORSHIP FIRM HAVING ITS PRINCIPAL PLACE OF BUSINESS AT K-1, 242/17, B/4 MEL-TECH, NEAR TURBO BEARING, AJI VASAHAT GIDC, RAJKOT-360002, GUJARAT-INDIA		
DATE OF REGISTRATION	23/09/2013	
TITLE	HANDLE	
PRIORITY NA		
DESIGN NUMBER	256844	
CLASS	23-04	
1)CROMPTON GREAVES LIMITED, CG HOUSE, 6TH FLOOR, DR. ANNIE BESANT ROAD, WORLI, MUMBAI - 400030, MAHARASHTRA, INDIA; AN INDIAN COMPANY		
DATE OF REGISTRATION	26/09/2013	
TITLE	CEILING FAN	
PRIORITY NA		
DESIGN NUMBER	256079	
CLASS	07-99	
1)MOHD. SHARIQ, WASEEM AKHTAR & MUSHAHID HUSAIN; ALL INDIAN NATIONALS, TRADING AS INTRA ACCESSORIES WHOSE ADDRESS IS C/O INTRA DECO CORP., NEAR IQBAL BUILDING, BARADARI, MORADABAD-244001, U.P., INDIA		
DATE OF REGISTRATION	27/08/2013	
TITLE	L.P.G. CYLINDER TROLLEY	
PRIORITY NA		

DESIGN NUMBER	256179
CLASS	08-06
1)SHOBHNABEN R BARASIYA (ADULT & INDIAN NATIONALS) AND SOLE PROPRIETOR OF SURAJ METAL (INDIAN PROPRIETARY CONCERN) HAVING PLACE OF BUSINESS AT-4, PARSANA SOCIETY, NR. 73, SCHOOL RAJKOT-GUJARAT (INDIA)	
DATE OF REGISTRATION	03/09/2013
TITLE	HANDLE
PRIORITY NA	

DESIGN NUMBER	256310
CLASS	02-04
1)LIBERTY SHOES LIMITED, AN INDIAN COMPANY, OF LIBERTY PURAM, 13, MILESTONE, GT KARNAL ROAD, KUTAIL, DT-KARNAL - 132001, HARYANA, INDIA	
DATE OF REGISTRATION	06/09/2013
TITLE	SOLE FOR FOOTWEAR
PRIORITY NA	

DESIGN NUMBER	256405
CLASS	06-04
1)GODREJ & BOYCE MFG. CO. LTD., AN INDIAN COMPANY INCORPORATED UNDER THE COMPANIES ACT, 1913, OF GODREJ INTERIO, PLANT 4, PIROJSHANAGER, VIKHROLI (WEST), MUMBAI-400079, INDIA	
DATE OF REGISTRATION	12/09/2013
TITLE	WALL MOUNTED SHELF
PRIORITY NA	

DESIGN NUMBER	253276
CLASS	24-02
1)ENDO PHARMACEUTICALS SOLUTIONS INC., HAVING ITS REGISTERED OFFICE AT 1400 ATWATER DRIVE, MALVERN, PENNSYLVANIA 19355, USA, BY NATIONALITY USA	
DATE OF REGISTRATION	22/04/2013
TITLE	TUNNELLING TOOL FOR IMPLANTING A MEDICAL IMPLANT

PRIORITY

PRIORITY NUMBER	DATE	COUNTRY
29/435,450	24/10/2012	U.S.A.

DESIGN NUMBER	254828
CLASS	07-99
1)M/S K.S.B. INTERNATIONAL, E-2/47, SHASTRI NAGAR, NEW DELHI-110052, AN INDIAN PROPRIETORSHIP FIRM, WHOSE PROPRIETOR IS DEEPAK BHALLA, OF ABOVE ADDRESS, ALL INDIAN NATIONAL	
DATE OF REGISTRATION	27/06/2013
TITLE	STORAGE BOX
PRIORITY NA	

DESIGN NUMBER	255571
CLASS	09-01
1)UNILEVER PLC, A COMPANY REGISTERED IN ENGLAND AND WALES UNDER COMPANY NO. 41424 OF UNILEVER HOUSE, 100 VICTORIA EMBANKMENT, LONDON, EC4Y 0DY, UNITED KINGDOM	
DATE OF REGISTRATION	31/07/2013
TITLE	BOTTLE

PRIORITY

PRIORITY NUMBER	DATE	COUNTRY
002177089-0001	01/02/2013	OHIM

DESIGN NUMBER	255915	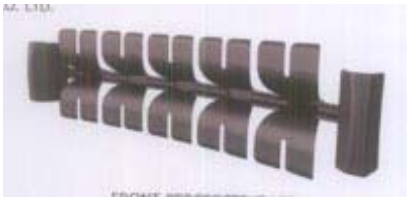
CLASS	06-01	
1)GODREJ & BOYCE MFG. CO. LTD., AN INDIAN COMPANY INCORPORATED UNDER THE COMPANIES ACT, 1913, OF GODREJ INTERIO, PLANT 4, PIROJSHANAGER, VIKHROLI (WEST), MUMBAI-400079, INDIA		
DATE OF REGISTRATION	20/08/2013	
TITLE	LUMBAR SUPPORT OF A CHAIR	
PRIORITY NA		
DESIGN NUMBER	256948	
CLASS	05-05	
1)M/S. BIBA APPARELS PRIVATE LIMITED, AN INDIAN PRIVATE LIMITED COMPANY INCORPORATED UNDER THE PROVISION OF THE COMPANIES ACT, 1956, AND HAVING ITS'S REGISTERED OFFICE AT RELIABLE HOUSE, SITUATED AT HANUMAN SILK MILL COMPOUND, KANJURMARG (WEST), OPP. HUMA MALL, MUMBAI-400078 MAHARASHTRA, INDIA		
DATE OF REGISTRATION	30/09/2013	
TITLE	TEXTILE FABRIC	
PRIORITY NA		
DESIGN NUMBER	257026	
CLASS	05-05	
1)M/S. BIBA APPARELS PRIVATE LIMITED, AN INDIAN PRIVATE LIMITED COMPANY INCORPORATED UNDER THE PROVISION OF THE COMPANIES ACT, 1956, AND HAVING ITS'S REGISTERED OFFICE AT RELIABLE HOUSE, SITUATED AT HANUMAN SILK MILL COMPOUND, KANJURMARG (WEST), OPP. HUMA MALL, MUMBAI-400078 MAHARASHTRA, INDIA		
DATE OF REGISTRATION	30/09/2013	
TITLE	TEXTILE FABRIC	
PRIORITY NA		

DESIGN NUMBER	256299	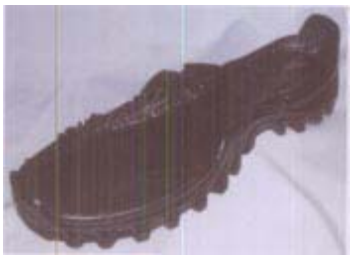
CLASS	02-04	
1)LIBERTY SHOES LIMITED, AN INDIAN COMPANY, OF LIBERTY PURAM, 13, MILESTONE, GT KARNAL ROAD, KUTAIL, DT-KARNAL - 132001, HARYANA, INDIA		
DATE OF REGISTRATION	06/09/2013	
TITLE	SOLE FOR FOOTWEAR	
PRIORITY NA		

DESIGN NUMBER	255017	
CLASS	12-11	
1)BAJAJ AUTO LIMITED, AN INDIAN COMPANY, INCORPORATED UNDER THE COMPANIES ACT OF 1956, HAVING ITS PRINCIPAL PLACE OF BUSINESS AT NEW 2ND & 3RD FLOOR, KHIVRAJ BUILDING, NO. 616, ANNASALAI, CHENNAI - 600006, STATE OF TAMIL NADU, INDIA, AND REGISTERED OFFICE AT AKURDI, PUNE-411035, STATE OF MAHARASHTRA, INDIA		
DATE OF REGISTRATION	05/07/2013	
TITLE	STEP HOLDER FOR MOTORCYCLE	
PRIORITY NA		

DESIGN NUMBER	255143	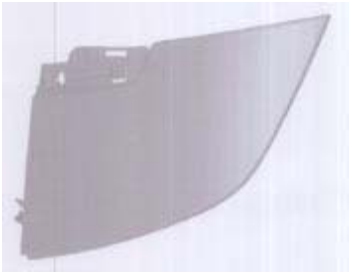
CLASS	12-16	
1)VOLVO TRUCK CORPORATION, OF 405 08 GÖTEBORG, SWEDEN		
DATE OF REGISTRATION	11/07/2013	
TITLE	FRONT PANEL FOR VEHICLES	

PRIORITY

PRIORITY NUMBER	DATE	COUNTRY
002179424-0002	06/02/2013	OHIM

DESIGN NUMBER	255748
CLASS	15-01
1)TRIVENI TURBINE LIMITED, AN INDIAN COMPANY HAVING ITS PLACE OF BUSINESS AT 12A, PEENYA INDUSTRIAL AREA, BANGLORE-560058	
DATE OF REGISTRATION	12/08/2013
TITLE	STEAM CASING OF A SINGLE STAGE STEAM TURBINE
PRIORITY NA	

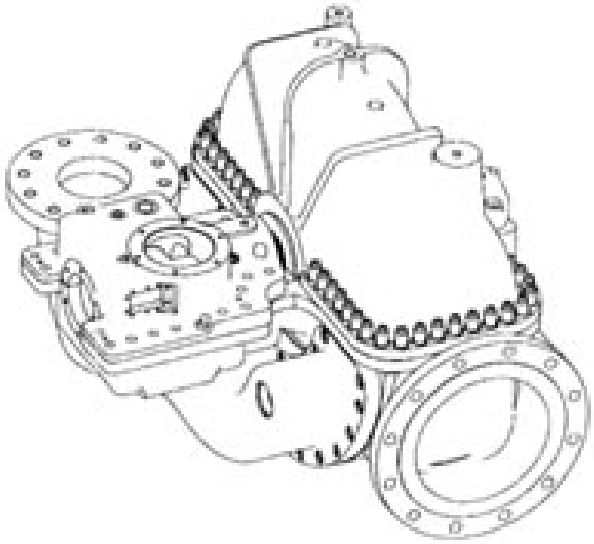

DESIGN NUMBER	256296
CLASS	02-04
1)LIBERTY SHOES LIMITED, AN INDIAN COMPANY, OF LIBERTY PURAM, 13, MILESTONE, GT KARNAL ROAD, KUTAIL, DT-KARNAL - 132001, HARYANA, INDIA	
DATE OF REGISTRATION	06/09/2013
TITLE	SOLE FOR FOOTWEAR
PRIORITY NA	

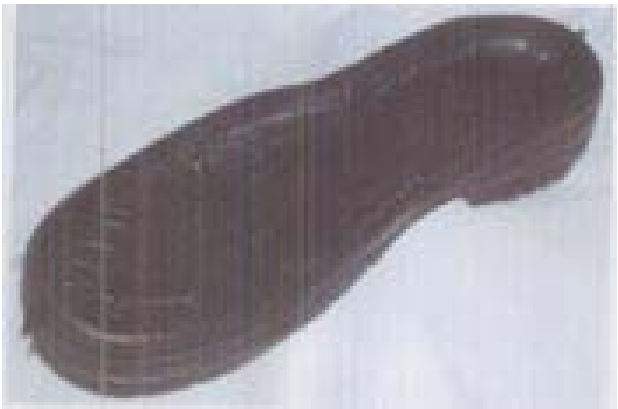

DESIGN NUMBER	254128
CLASS	12-08
1)BAYERISCHE MOTOREN WERKE AKTIENGESELLSCHAFT, OF PETUELRING 130, 80809, MUNICH, GERMANY, A GERMAN COMPANY	
DATE OF REGISTRATION	28/05/2013
TITLE	MOTOR VEHICLE

PRIORITY

PRIORITY NUMBER	DATE	COUNTRY
DE 402012101055.7	06/12/2012	GERMANY

DESIGN NUMBER	255060
CLASS	12-11
1)HONDA MOTOR CO., LTD., A CORPORATION OF JAPAN OF 1-1, MINAMI-AOYAMA 2-CHOME, MINATO-KU, TOKYO, 107-8556 JAPAN	
DATE OF REGISTRATION	08/07/2013
TITLE	MOTOR SCOOTER

PRIORITY

PRIORITY NUMBER	DATE	COUNTRY
2013-000162	09/01/2013	JAPAN

DESIGN NUMBER	255579
CLASS	23-02
1)DEEPAM PALM DISH, SMALL SCALE INDUSTRIAL UNIT, REGISTERED UNDER MSME ACT, WHOSE ADDRESS IS DEEPAK PALM DISH, MAPCO ROAD, ST. THOMAS STREET, KURIACHIRA, THRISSUR-6, KERALA AND NATIONALITY IS INDIAN	
DATE OF REGISTRATION	31/07/2013
TITLE	SOAP DISH
PRIORITY NA	

DESIGN NUMBER	256657
CLASS	14-03
1)BANG & OLUFSEN A/S, A DANISH PUBLIC LIMITED COMPANY OF THE ADDRESS PETER BANGS VEJ 15, 7600 STRUER, DENMARK	
DATE OF REGISTRATION	20/09/2013
TITLE	LOUDSPEAKER

PRIORITY

PRIORITY NUMBER	DATE	COUNTRY
002207563-0001	22/03/2013	OHIM

DESIGN NUMBER	256738	
CLASS	06-01	
1)WIM PLAST LIMITED, A PUBLIC LIMITED COMPANY REGISTERED UNDER THE PROVISION OF INDIAN COMPANIES ACT, 1956, HAVING OFFICE ADDRESS AT 5 CORPORATE AVENUE, B' WING, CELLO HOUSE, SONAWALA ROAD, GOREGAON (EAST), MUMBAI-400063, MAHARASHTRA, INDIA		
DATE OF REGISTRATION	24/09/2013	
TITLE	CHAIR	
PRIORITY NA		
DESIGN NUMBER	256304	
CLASS	02-04	
1)LIBERTY SHOES LIMITED, AN INDIAN COMPANY, OF LIBERTY PURAM, 13, MILESTONE, GT KARNAL ROAD, KUTAIL, DT-KARNAL - 132001, HARYANA, INDIA		
DATE OF REGISTRATION	06/09/2013	
TITLE	SOLE FOR FOOTWEAR	
PRIORITY NA		
DESIGN NUMBER	256397	
CLASS	07-02	
1)MRS. SIMPLE (PROPRIETOR), NATIONALITY INDIAN TRADING AS TULIP INDUSTRIES (THIS IS A PROPRIETORSHIP FIRM) WHOES ADDRESS IS C-130, SECTOR-3, BAWANA INDUSTRIAL AREA, DELHI-110039 (INDIA) C-130, SECTOR-3, BAWANA INDUSTRIAL AREA, DELHI-110039 (INDIA)		
DATE OF REGISTRATION	13/09/2013	
TITLE	BOWL	
PRIORITY NA		

DESIGN NUMBER	255210
CLASS	23-02
1)RAJHANS CHEMICALS & PLASTIC INDUSTRIES, B-70/76, DSIDC INDUSTRIAL AREA, LAWRENCE ROAD, DELHI-110035, INDIA. (AN INDIAN PARTNERSHIP FIRM WHOSE PARTNERS ARE :- SH. SANJEEV JAIN AND SMT. SHAKUNTLA DEVI JAIN AN INDIAN NATIONAL OF THE ABOVE ADDRESS	
DATE OF REGISTRATION	12/07/2013
TITLE	BALLCOCK
PRIORITY NA	

DESIGN NUMBER	255285
CLASS	08-06
1)(1) MAYURBHAI RADADIYA (2) BHAVESHBHAI RAKHOLIYA BOTH INDIAN NATIONAL PARTNERS OF PLANET ENTERPRISE AN INDIAN PARTNERSHIP FIRM HAVING ITS PRINCIPAL PLACE OF BUSINESS AT 4-PARSANA SOCIETY, NEAR 50 FEET MAIN ROAD, OPP. 73 NO. SCHOOL, PATEL NAGAR RAJKOT, GUJARAT-INDIA	
DATE OF REGISTRATION	17/07/2013
TITLE	HANDLE
PRIORITY NA	

DESIGN NUMBER	255546
CLASS	12-15
1)COMPAGNIE GENERALE DES ETABLISSEMENTS MICHELIN, A FRENCH COMPANY OF 12 COURS SABLON, FR-63000, CLERMONT-FERRAND, FRANCE, AND MICHELIN RECHERCHE ET TECHNIQUE S.A., A SWISS COMPANY OF ROUTE LOUIS- BRAILLE 10 - CH-1763 GRANGES-PACCOT, SWITZERLAND	
DATE OF REGISTRATION	31/07/2013
TITLE	TYRE

PRIORITY

PRIORITY NUMBER	DATE	COUNTRY
13/0842	15/02/2013	FRANCE

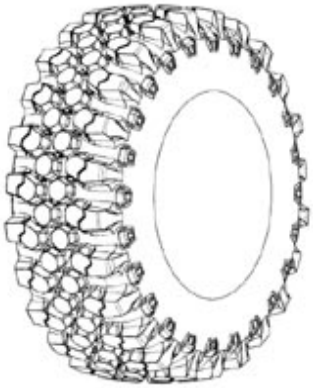

DESIGN NUMBER	255647
CLASS	08-06

1)DILIPBHAI BACHUBHAI HIRPARA (INDIAN NATIONALS) AND SOLE PROPRIETOR OF JANKI DIE-CAST (INDIAN PROPRIETORSHIP CONCERN) HAVING PLACE OF BUSINESS
AT-PLOT NO. 834, AJI INDUSTRIAL AREA, NR; SITARAM WAY BRIDGE, OPP: MUNICIPAL WORKSHOP, BHAVNAGAR ROAD, RAJKOT-GUJARAT (INDIA)

DATE OF REGISTRATION	06/08/2013
TITLE	HANDLE

PRIORITY NA

DESIGN NUMBER	256924
CLASS	05-05

1)M/S. BIBA APPARELS PRIVATE LIMITED, AN INDIAN PRIVATE LIMITED COMPANY INCORPORATED UNDER THE PROVISION OF THE COMPANIES ACT, 1956, AND HAVING ITS'S REGISTERED OFFICE AT
RELIABLE HOUSE, SITUATED AT HANUMAN SILK MILL COMPOUND, KANJURMARG (WEST), OPP. HUMA MALL, MUMBAI-400078 MAHARASHTRA, INDIA

DATE OF REGISTRATION	30/09/2013
TITLE	TEXTILE FABRIC

PRIORITY NA

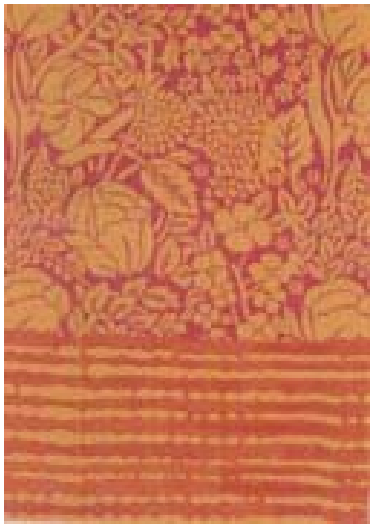

DESIGN NUMBER	251452
CLASS	09-05

1)AVENTISUB II INC., A CORPORATION ORGANIZED UNDER THE LAWS OF THE STATES OF DELAWARE, OF
3711 KENNETT PIKE, SUITE 200 GREENVILLE, DELAWARE 19807, UNITED STATES

DATE OF REGISTRATION	06/02/2013
TITLE	BLISTER PACKAGE

PRIORITY

PRIORITY NUMBER	DATE	COUNTRY
29429018	06/08/2012	U.S.A.

DESIGN NUMBER	256277	
CLASS	07-01	
1)BONJOUR INTERNATIONAL, A INDIAN PARTNERSHIP FIRM OF 15 UA JAWAHAR NAGAR, DELHI-110007, INDIA, WHOSE PARTNERS ARE (1) RAMAN GUPTA OF 385, DEEPALI, PITAMPURA, DELHI-110034 (2) RAJESH KUMAR GUPTA OF 384, DEEPALI, PITAMPURA, DELHI-110034 AND (3) REENA GUPTA OF 384, DEEPALI, PITAMPURA, DELHI-110034 ALL INDIAN NATIONALS		
DATE OF REGISTRATION	06/09/2013	
TITLE	FLASK	
PRIORITY NA		
DESIGN NUMBER	255920	
CLASS	06-01	
1)GODREJ & BOYCE MFG. CO. LTD., AN INDIAN COMPANY INCORPORATED UNDER THE COMPANIES ACT, 1913, OF GODREJ INTERIO, PLANT 4, PIROJSHANAGER, VIKHROLI (WEST), MUMBAI-400079, INDIA		
DATE OF REGISTRATION	20/08/2013	
TITLE	NECKREST OF A CHAIR	
PRIORITY NA		
DESIGN NUMBER	256301	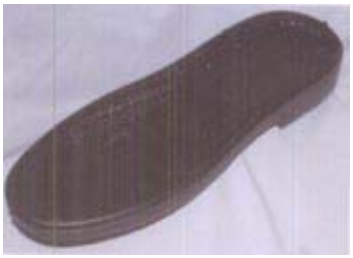
CLASS	02-04	
1)LIBERTY SHOES LIMITED, AN INDIAN COMPANY, OF LIBERTY PURAM, 13, MILESTONE, GT KARNAL ROAD, KUTAIL, DT-KARNAL - 132001, HARYANA, INDIA		
DATE OF REGISTRATION	06/09/2013	
TITLE	SOLE FOR FOOTWEAR	
PRIORITY NA		

DESIGN NUMBER	255916	
CLASS	06-01	
1)GODREJ & BOYCE MFG. CO. LTD., AN INDIAN COMPANY INCORPORATED UNDER THE COMPANIES ACT, 1913, OF GODREJ INTERIO, PLANT 4, PIROJSHANAGER, VIKHROLI (WEST), MUMBAI-400079, INDIA		
DATE OF REGISTRATION	20/08/2013	
TITLE	ARMREST OF A CHAIR	
PRIORITY NA		
DESIGN NUMBER	256300	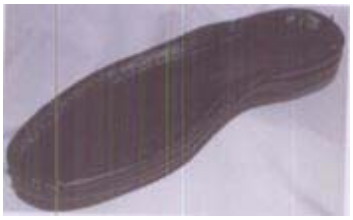
CLASS	02-04	
1)LIBERTY SHOES LIMITED, AN INDIAN COMPANY, OF LIBERTY PURAM, 13, MILESTONE, GT KARNAL ROAD, KUTAIL, DT-KARNAL - 132001, HARYANA, INDIA		
DATE OF REGISTRATION	06/09/2013	
TITLE	SOLE FOR FOOTWEAR	
PRIORITY NA		
DESIGN NUMBER	255018	
CLASS	12-11	
1)BAJAJ AUTO LIMITED, AN INDIAN COMPANY, INCORPORATED UNDER THE COMPANIES ACT OF 1956, HAVING ITS PRINCIPAL PLACE OF BUSINESS AT NEW 2ND & 3RD FLOOR, KHIVRAJ BUILDING, NO. 616, ANNASALAI, CHENNAI - 600006, STATE OF TAMIL NADU, INDIA, AND REGISTERED OFFICE AT AKURDI, PUNE-411035, STATE OF MAHARASHTRA, INDIA		
DATE OF REGISTRATION	05/07/2013	
TITLE	MOTORCYCLE	
PRIORITY NA		

DESIGN NUMBER	255065	
CLASS	07-02	
1)TTK PRESTIGE LIMITED, AN INDIAN COMPANY, INCORPORATED UNDER THE COMPANIES ACT 1956, HAVING ITS PRINCIPAL PLACE OF BUSINESS AT 11TH FLOOR, BRIGADE TOWERS, 135 BRIGADE ROAD, BANGALORE-560025, STATE OF KARNATAKA, INDIA		
DATE OF REGISTRATION	08/07/2013	
TITLE	GAS STOVE	
PRIORITY NA		

DESIGN NUMBER	257042	
CLASS	05-05	
1)M/S. BIBA APPARELS PRIVATE LIMITED, AN INDIAN PRIVATE LIMITED COMPANY INCORPORATED UNDER THE PROVISION OF THE COMPANIES ACT, 1956, AND HAVING ITS'S REGISTERED OFFICE AT RELIABLE HOUSE, SITUATED AT HANUMAN SILK MILL COMPOUND, KANJURMARG (WEST), OPP. HUMA MALL, MUMBAI-400078 MAHARASHTRA, INDIA		
DATE OF REGISTRATION	30/09/2013	
TITLE	TEXTILE FABRIC	
PRIORITY NA		

DESIGN NUMBER	256313	
CLASS	02-04	
1)LIBERTY SHOES LIMITED, AN INDIAN COMPANY, OF LIBERTY PURAM, 13, MILESTONE, GT KARNAL ROAD, KUTAIL, DT-KARNAL - 132001, HARYANA, INDIA		
DATE OF REGISTRATION	06/09/2013	
TITLE	SOLE FOR FOOTWEAR	
PRIORITY NA		

DESIGN NUMBER	254972
CLASS	14-99
1)SAMSUNG ELECTRONICS CO., LTD. 129, SAMSUNG-RO, YEONGTONG-GU, SUWON-SI, GYEONGGI-DO, 443-742, REPUBLIC OF KOREA, A COMPANY OF REPUBLIC OF KOREA	
DATE OF REGISTRATION	03/07/2013
TITLE	TELEVISION STAND

PRIORITY

PRIORITY NUMBER	DATE	COUNTRY
30-2013-0000634	04/01/2013	REPUBLIC OF KOREA

DESIGN NUMBER	256580
CLASS	12-15
1)TVS SRICHAKRA LIMITED, AN INDIAN COMPANY, 7B, WEST VELI STREET, MADURAI 625001, TAMIL NADU, INDIA	
DATE OF REGISTRATION	18/09/2013
TITLE	TYRE

PRIORITY NA

DESIGN NUMBER	255483
CLASS	24-01
1)INDIAN COUNCIL OF AGRICULTURAL RESEARCH, KRISHI BHAVAN, DR. RAJENDRA PRASAD ROAD, NEW DELHI-110001, INDIAN	
DATE OF REGISTRATION	29/07/2013
TITLE	INTERLOCKING NAIL FOR REPAIR OF FRACTURE IN TIBIA

PRIORITY NA

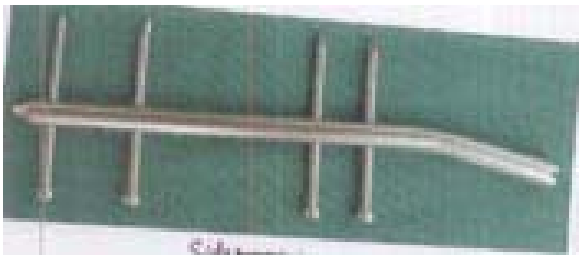

DESIGN NUMBER	255589	
CLASS	08-06	
1)(1)MUKESHBHAI B. SORATHIYA AND (2) JAYSUKHBHAI R. SORATHIYA BOTH INDIAN NATIONAL PARTNER OF SERON STEEL INDUSTRIES AN INDIAN PARTNERSHIP FIRM HAVING ITS PRINCIPAL PLACE OF BUSINESS AT B/H. NILKANTH CINEMA, MEHULNAGAR MAIN ROAD, NEAR GAYATRI HALL, RAJKOT-2, GUJARAT-INDIA		
DATE OF REGISTRATION	01/08/2013	
TITLE	KNOB	
PRIORITY NA		
DESIGN NUMBER	256081	
CLASS	03-01	
1)RAMNEET KAUR SAHOTA, NATIONALITY INDIAN WHOES ADDRESS IS V-264, 1ST FLOOR, RAJOURI GARDEN, NEW DELHI-110027 (INDIA)		
DATE OF REGISTRATION	27/08/2013	
TITLE	HANDBAG	
PRIORITY NA		
DESIGN NUMBER	256199	
CLASS	15-99	
1)M/S JOGINDER ELECTRIC WORKS, DHULKOT ROAD, P.O. AHMEDGARH-148021, DISTT. SANGRUR (PUNJAB) INDIA AN INDIAN PROPRIETORSHIP FIRM WHOSE PROPRIETOR IS:- HARJIT SINGH BEING INDIAN NATIONALS OF THE ABOVE ADDRESS		
DATE OF REGISTRATION	04/09/2013	
TITLE	WOOD ENGRAVING MACHINE	
PRIORITY NA		

DESIGN NUMBER	256266
CLASS	24-04
1)3M INNOVATIVE PROPERTIES COMPANY, A COMPANY INCORPORATED IN THE STATE OF DELAWARE OF 3M CENTER, SAINT PAUL, MINNESOTA 55133-3427, USA	
DATE OF REGISTRATION	06/09/2013
TITLE	MEDICAL DRESSING
PRIORITY	

PRIORITY NUMBER	DATE	COUNTRY
29/449,415	15/03/2013	U.S.A.

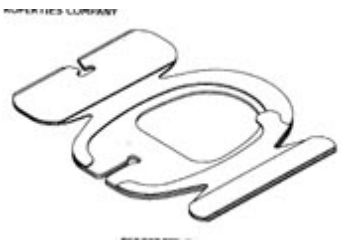

DESIGN NUMBER	256312
CLASS	02-04
1)LIBERTY SHOES LIMITED, AN INDIAN COMPANY, OF LIBERTY PURAM, 13, MILESTONE, GT KARNAL ROAD, KUTAIL, DT-KARNAL - 132001, HARYANA, INDIA	
DATE OF REGISTRATION	06/09/2013
TITLE	SOLE FOR FOOTWEAR
PRIORITY NA	

DESIGN NUMBER	255588
CLASS	08-06
1)(1)MUKESHBHAI B. SORATHIYA AND (2) JAYSUKHBHAI R. SORATHIYA BOTH INDIAN NATIONAL PARTNER OF SERON STEEL INDUSTRIES AN INDIAN PARTNERSHIP FIRM HAVING ITS PRINCIPAL PLACE OF BUSINESS AT B/H. NILKANTH CINEMA, MEHULNAGAR MAIN ROAD, NEAR GAYATRI HALL, RAJKOT-2, GUJARAT-INDIA	
DATE OF REGISTRATION	01/08/2013
TITLE	HANDLE
PRIORITY NA	

DESIGN NUMBER	256080	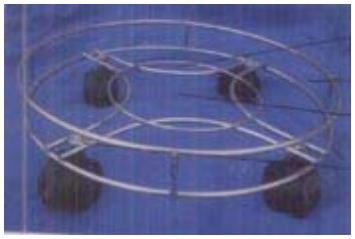
CLASS	07-99	
1)MOHD. SHARIQ, WASEEM AKHTAR & MUSHAHID HUSAIN; ALL INDIAN NATIONALS, TRADING AS INTRA ACCESSORIES WHOSE ADDRESS IS C/O INTRA DECO CORP., NEAR IQBAL BUILDING, BARADARI, MORADABAD-244001, U.P., INDIA		
DATE OF REGISTRATION	27/08/2013	
TITLE	L.P.G. CYLINDER TROLLEY	
PRIORITY NA		

DESIGN NUMBER	256873	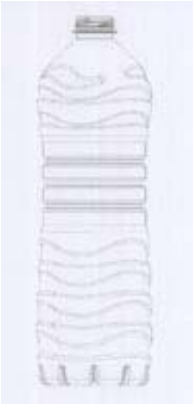
CLASS	09-01	
1)PRAMIT SANGHAVI AND DEWANG SANGHAVI, PARTNERS TRADING AS V2 CORP., A PARTNERSHIP FIRM, INDIAN, MANUFACTURERS AND MERCHANTS, WHOSE ADDRESS IS WZ-8/1, INDUSTRIAL AREA, KIRTI NAGAR, NEW DELHI-110015, INDIA		
DATE OF REGISTRATION	27/09/2013	
TITLE	BOTTLE	
PRIORITY NA		

DESIGN NUMBER	256265	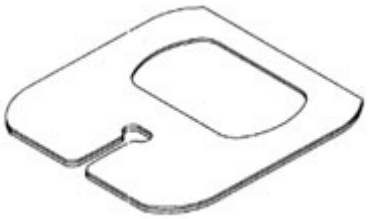
CLASS	24-04	
1)3M INNOVATIVE PROPERTIES COMPANY, A COMPANY INCORPORATED IN THE STATE OF DELAWARE OF 3M CENTER, SAINT PAUL, MINNESOTA 55133-3427, USA		
DATE OF REGISTRATION	06/09/2013	
TITLE	MEDICAL DRESSING	

PRIORITY

PRIORITY NUMBER	DATE	COUNTRY
29/448,174	11/03/2013	U.S.A.

DESIGN NUMBER	256311
CLASS	02-04

1)LIBERTY SHOES LIMITED, AN INDIAN COMPANY, OF
LIBERTY PURAM, 13, MILESTONE, GT KARNAL ROAD, KUTAIL, DT-KARNAL - 132001, HARYANA, INDIA

DATE OF REGISTRATION	06/09/2013
TITLE	SOLE FOR FOOTWEAR

PRIORITY NA

DESIGN NUMBER	253277
CLASS	24-02

1)ENDO PHARMACEUTICALS SOLUTIONS INC., HAVING ITS REGISTERED OFFICE AT
1400 ATWATER DRIVE, MALVERN, PENNSYLVANIA 19355, USA, BY NATIONALITY USA

DATE OF REGISTRATION	22/04/2013
TITLE	INSERTION TOOL

PRIORITY

PRIORITY NUMBER	DATE	COUNTRY
29/435,449	24/10/2012	U.S.A.

DESIGN NUMBER	254319
CLASS	12-16

1)RENAULT TRUCKS, A COMPANY ORGANIZED UNDER THE LAWS OF FRANCE,
OF 99 ROUTE DE LYON, 69800 SAINT PRIEST, FRANCE

DATE OF REGISTRATION	06/06/2013
TITLE	COMPONENT OF VEHICLE DOOR

PRIORITY NA

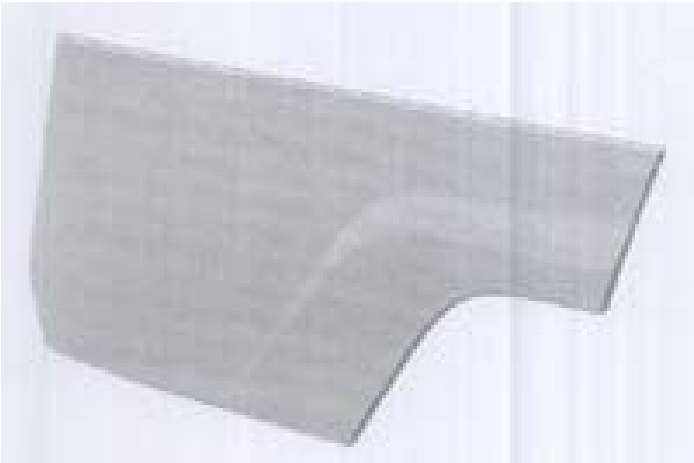

DESIGN NUMBER	255103	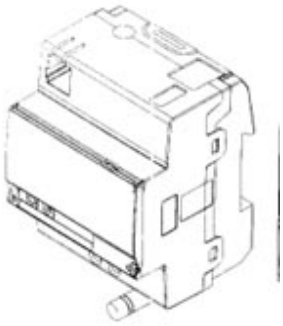
CLASS	14-03	
1)ABB AB, A SWEDISH COMPANY OF KOPPABERGSVAGEN 2, 721 83 VASTERAS, SWEDEN		
DATE OF REGISTRATION	10/07/2013	
TITLE	COMMUNICATION MODULE FOR ELECTRICITY METERS	
PRIORITY		

PRIORITY NUMBER	DATE	COUNTRY
002165183-0002	11/01/2013	OHIM