पेटेंट कार्यालय
शासकीय जर्नल

OFFICIAL JOURNAL
OF
THE PATENT OFFICE

निर्गमन सं. 52/2015	शुक्रवार	दिनांक: 25/12/2015
ISSUE NO. 52/2015	FRIDAY	DATE: 25/12/2015

पेटेंट कार्यालय का एक प्रकाशन

PUBLICATION OF THE PATENT OFFICE

INTRODUCTION

In view of the recent amendment made in the Patents Act, 1970 by the Patents (Amendment) Act, 2005 effective from 01st January 2005, the Official Journal of The Patent Office is required to be published under the Statute. This Journal is being published on weekly basis on every Friday covering the various proceedings on Patents as required according to the provision of Section 145 of the Patents Act 1970. All the enquiries on this Official Journal and other information as required by the public should be addressed to the Controller General of Patents, Designs & Trade Marks. Suggestions and comments are requested from all quarters so that the content can be enriched.

(Om Prakash Gupta)
CONTROLLER GENERAL OF PATENTS, DESIGNS & TRADE MARKS

25TH DECEMBER, 2015

CONTENTS

THE PATENT OFFICE
KOLKATA, 25/12/2015
Address of the Patent Offices/Jurisdictions
The following are addresses of all the Patent Offices located at different places having their Territorial Jurisdiction on a Zonal basis as shown below:-

1	Office of the Controller General of Patents, Designs & Trade Marks, Boudhik Sampada Bhavan, Near Antop Hill Post Office,S.M.Road,Antop Hill, Mumbai – 400 037 Phone: (91)(22) 24123311, Fax : (91)(22) 24123322 E-mail: cgpdtm@nic.in	4	The Patent Office, Government of India, Intellectual Property Rights Building, G.S.T. Road, Guindy, Chennai – 600 032. Phone: (91)(44) 2250 2081-84 Fax : (91)(44) 2250 2066 E-mail: chennai-patent@nic.in ❖ The States of Andhra Pradesh, Telangana, Karnataka, Kerala, Tamil Nadu and the Union Territories of Puducherry and Lakshadweep.
2	The Patent Office, Government of India, Boudhik Sampada Bhavan, Near Antop Hill Post Office,S.M.Road,Antop Hill, Mumbai – 400 037 Phone: (91)(22) 24137701 Fax: (91)(22) 24130387 E-mail: mumbai-patent@nic.in ❖ The States of Gujarat, Maharashtra, Madhya Pradesh, Goa and Chhattisgarh and the Union Territories of Daman and Diu & Dadra and Nagar Haveli	5	The Patent Office (Head Office), Government of India, Boudhik Sampada Bhavan, CP-2, Sector –V, Salt Lake City, Kolkata- 700 091 Phone: (91)(33) 2367 1943/44/45/46/87 Fax: (91)(33) 2367 1988 E-Mail: kolkata-patent@nic.in ❖ Rest of India
3	The Patent Office, Government of India, Boudhik Sampada Bhavan, Plot No. 32., Sector-14, Dwarka, New Delhi – 110075 Phone: (91)(11) 2808 1921 – 25 Fax: (91)(11) 2808 1920 & 2808 1940 E.mail: delhi-patent@nic.in ❖ The States of Haryana, Himachal Pradesh, Jammu and Kashmir, Punjab, Rajasthan, Uttar Pradesh, Uttaranchal, Delhi and the Union Territory of Chandigarh.		

Website: www.ipindia.nic.in
www.patentoffice.nic.in

All applications, notices, statements or other documents or any fees required by the Patents Act, 1970 and The Patents (Amendment) Act, 2005 or by the Patents (Amendment) Rules, 2006 will be received only at the appropriate offices of the Patent Office.

Fees: The Fees may either be paid in cash or may be sent by Bank Draft or Cheques payable to the Controller of Patents drawn on a scheduled Bank at the place where the appropriate office is situated.

पेटेंट कार्यालय

कोलकाता, दिनांक 25/12/2015

• कार्यालयों के क्षेत्राधिकार के पते

विभिन्न जगहों पर स्थित पेटेंट कार्यालय के पते आंचलिक आधार पर दर्शित उनके प्रादेशिक अधिकार क्षेत्र के साथ नीचे दिए गए है:-

1	कार्यालय : महानियंत्रक, एकस्व, अभिकल्प तथा व्यापार चिहन, एंटोप हिल डाकघर के समीप, एस. एम. रोड, एंटोप हिल, मुम्बई- 400 037, भारत, फोन: (91) (22) 24123311 फ़ैक्स: (91) (22) 24123322 ई. मेल: cgpdtm@nic.in	4	पेटेंट कार्यालय, भारत सरकार इंटेलेक्चुअल प्रॉपर्टी राइट्स बिल्डिंग, इंडस्ट्रियल इस्टेट एसआईडीसीओ आरएमडी गोडाउन एरिया एडजसेन्ट टु ईगल फ्लास्क, जी. एस. टी. रोड, गायन्डी चेन्नई - 600 032. फोन: (91)(44) 2250 2081-84 फ़ैक्स: (91)(44) 2250-2066 ई. मेल: chennai-patent@nic.in ❖ आन्ध्र प्रदेश, तेलंगाना, कर्नाटक, केरल, तमिलनाडु तथा पुडुचेरी राज्य क्षेत्र एवं संघ शासित क्षेत्र, लक्षदीप
2	पेटेंट कार्यालय, भारत सरकार बौद्धिक संपदा भवन, एंटोप हिल डाकघर के समीप, एस. एम. रोड, एंटोप हिल, मुम्बई- 400 037, फोन: (91) (22) 24137701 फ़ैक्स: (91) (22) 24130387 ई. मेल: Mumbai-patent@nic.in ❖ गुजरात, महाराष्ट्र, मध्य प्रदेश, गोवा तथा छत्तीसगढ़ राज्य क्षेत्र एवं संघ शासित क्षेत्र, दमन तथा दीव, दादर और नगर हवेली•	5	पेटेंट कार्यालय, भारत सरकार कोलकाता, (प्रधान कार्यालय) बौद्धिक संपदा भवन, सीपी-2, सेक्टर- V, साल्ट लेक सिटी, कोलकाता-700 091, भारत. फोन: (91)(33) 2367 1943/44/45/46/87 फ़ैक्स:/Fax: (91)(33) 2367 1988 ई. मेल: kolkata-patent@nic.in ❖ भारत का अवशेष क्षेत्र
3	पेटेंट कार्यालय, भारत सरकार बौद्धिक संपदा भवन, प्लॉट सं. 32, सेक्टर- 14, द्वारका, नई दिल्ली- 110 075. फोन: (91)(11) 2808 1921-25 फ़ैक्स: (91)(11) 2808 1920, 2808 1940 ई. मेल: delhi-patent@nic.in हरियाणा, हिमाचल प्रदेश, जम्मू तथा कश्मीर, पंजाब,राजस्थान, उत्तर प्रदेश, दिल्ली तथा उत्तरांचल राज्य क्षेत्रों, एवं संघ शासित क्षेत्र चंडीगढ़		

वेबसाइट: http://www.ipindia.nic.in

www.patentoffice.nic.in

पेटेंट अधिनियम, 1970 तथा पेटेंट (संशोधन) अधिनियम, 2005 अथवा पेटेंट (संशोधन) नियम, 2006 द्वारा वांछित सभी आवेदन, सूचनाए, विवरण या अन्य दस्तावेज़ या कोई शुल्क पेटेंट कार्यालय के केवल उपयुक्त कार्यालय में स्वीकृत होंगे।

शुल्क: शुल्क या तो नगद रूप में या Controller of Patents के नाम में देय बैंक ड्राफ्ट या चेक के द्वारा भेजी जा सकती है जो उसी स्थान के किसी अनुसूचित बैंक में प्रदत्त हो जहाँ उपयुक्त कार्यालय स्थित है ।

SPECIAL NOTICE

18 Months publication as required under Section 11A of the Patents Act, 1970 as amended by the Patents (Amendment) Act, 2005.

Notice is hereby given that any person at any time before the grant of Patent may give representation by way of opposition to the Controller of Patents at appropriate office on the ground and in a manner specified under section 25(1) of the Patents (Amendment) Act, 2005 read with Rule 55 of the Patents (Amendment) Rules, 2006.

Notice is also given that if any interested person requests for copies of the complete specification, drawing and abstract of any application already published, the photocopy of the same can be supplied by the Patent Office as per the jurisdiction on payment of prescribed fees of Rs.8/- per page. If any further details are required to be obtained, the same can be provided by the respective Patent Offices on request.

(Om Prakash Gupta)
CONTROLLER GENERAL OF PATENTS, DESIGNS & TRADE MARKS

SPECIAL NOTICE

Under the new provision of the Patents Act, 1970 as amended by the Patents (Amendment) Act, 2005 and Rules there under, Publication of the matter relating to Patents in the Official Gazette of India Part III, Section 2 has been discontinued and instead The Official Journal of the Patent Office is being published containing all the activities of The Patent Office such as publication of all the patent applications after 18th months , grant of patents & all other information in respect of the proceedings as required under the provisions of the Patents (Amendment) Act, 2005 and Rules thereunder on weekly basis on every **Friday**.

The Journal is uploaded in the website every Friday. So Paper form and CD-ROM form of the Journal are discontinued from 01/01/2009.

SPECIAL NOTICE

Every effort is being taken to publish all the patent applications under section 11(A) of the Patents Act. However, if duplication of publication of any application is found, then earlier date of publication will be taken for the purpose of provisional protection for applicant and Patent Office will grant Patent not before six months from the date of second publication, provided that there is there is no third party representation.

बौद्धिक सम्पदा भारत
एकस्व/अभिकल्प/व्यापार चिह्नें
भौगोलिक संकेत/पेटेंट सूचना पद्धति
INTELLECTUAL ROPERTY INDIA
Patents/Designs/Trade Marks
Geographical Indications/
Patent Information System

भारत सरकार
GOVERNMENT OF INDIA
पेटेंट कार्यालय
THE PATENT OFFICE

बौद्धिक संपदा भवन/BOUDHIK SAMPADA BHAWAN
सीपी-२/CP-2, सेक्टर- V/ Sector-V, साल्ट लेक/SALT LAKE
कोलकाता/KOLKATA- 700 091.
दूरभाष/Tel : (91)(33)2367 1943-46
: (91)(33)2367 1987(D).

संख्या/No. : H-45011/1/2004-Admn.

दिनांक/Date: 10-12-2015

LIST OF HOLIDAYS FOR THE YEAR – 2016

The following days have been declared as Holidays to be observed by the Patent Office Kolkata during the year 2016.

Sl. No.	Holidays & Connected Festivals	Date	Days of Week
1.	Republic Day	January 26	Tuesday
2.	Basant Panchami/Sri Panchami	February 12	Friday
3.	Holi	March 24	Thursday
4.	Good Friday	March 25	Friday
5.	Mahavir Jayanti	April 20	Wednesday
6.	Buddha Purnima	May 21	Saturday
7.	Idu'l Fitr	July 06	Wednesday
8.	Independence Day	August 15	Monday
9.	Id-uz-Zuha (Bakrid)	September, 12	Monday
10.	Mahatma Gandhi's Birthday	October 02	Sunday
11.	Additional Day for Dussehra (Maha Navami)	October 10	Monday
12.	Dussehra	October 11	Tuesday
13.	Muharram	October 12	Wednesday
14.	Diwali (Deepavali)	October 30	Sunday
15.	Guru Nanak's Birthday	November 14	Monday
16.	Milad-un-Nabi or Id-E-Milad (Prophet Mohammad's Birthday)	December 13	Tuesday
17.	Christmas Day	December 25	Sunday

Note: Central Government Organizations, which include industrial, commercial & training establishments (i.e. other than doing work of Secretariat nature) would observe 16 holidays in a year out of which 3 namely Republic Day, Independence Day and Mahatma Gandhi's Birthday will be compulsory. The remaining holidays/occasions may be determined by such Establishments/Organizations themselves on year to year basis.

In deciding whether a particular Deptt/Establishment/Organization an industrial, commercial or trading organizations (i.e. other than those doing work of Secretariat nature) the decision may be taken by the respective Ministry/Ministry of Home Affairs, New Delhi.

The date of Holidays for the Muslim festivals may be changed on sighting of the Moon and decision to be taken by the State Govt.

बौद्धिक सम्पदा भारत
एकस्व/अभिकल्प/व्यापार चिह्न
भौगोलिक संकेत/पेटेंट सूचना पद्धति
INTELLECTUAL ROPERTY
INDIA
Patents/Designs/Trade Marks
Geographical Indications/
Patent Information System

भारत सरकार
GOVERNMENT OF INDIA
पेटेंट कार्यालय
THE PATENT OFFICE

बौद्धिक सम्पदा भवन/BOUDDHIK SAMPADA BHAWAN
सीपी/CP-2, सेक्टर/Sector-V, साल्ट लेक/SALT LAKE
कोलकाता/KOLKATA- 700 091.

दूरभाष/Tel : (91)(33)2367 1943-46
: (91)(33)2367 1987(D),
फैक्स/Fax : (91)(33)2367 1988/1353,
ई-मेल/E-Mail: kolkata-patent@nic.in,
वेब साइट/Website: www.ipindia.nic.in,
: www.ipindia.gov.in

संख्या/No:-II-45011/1/2004-प्रशा.

दिनांक/Date: 10/12/2015

वर्ष 2016 में छुट्टियों की सूची

वर्ष 2016 के दौरान पेटेंट कार्यालय, कोलकाता के लिए निम्नलिखित दिनों को छुट्टी घोषित किया गया है।

क्र.सं.	छुट्टियाँ तथा संबंधित त्यौहार	दिनांक	सप्ताह के दिन
1.	गणतंत्र दिवस	जनवरी 26	मंगलवार
2.	बसन्त पंचमी/श्रीपंचमी	फरवरी 12	शुक्रवार
3.	होली	मार्च 24	गुरूवार
4.	गुड फ्राइडे	मार्च 25	शुक्रवार
5.	महावीर जयंती	अप्रैल 20	बुधवार
6.	बुद्ध पुर्णिमा	मई 21	शनिवार
7.	ईद-उल-फितर	जुलाई 06	बुधवार
8.	स्वतंत्रता दिवस	अगस्त 15	सोमवार
9.	ईद-उल-जुहा (बकरीद)	सितम्बर 12	सोमवार
10.	महात्मा गाँधी जयंती	अक्तुबर 02	रविवार
11.	दशहरा के लिए अतिरिक्त दिन (महा नवमी)	अक्तुबर 10	सोमवार
12.	दशहरा	अक्तुबर 11	मंगलवार
13.	मुहर्रम	अक्तुबर 12	बुधवार
14.	दिवाली (दिपावली)	अक्तुबर 30	रविवार
15.	गुरूनानक जयंती	नवम्बर 14	सोमवार
16.	मिलाद-उन-नबी या ईद-ए-मिलाद (प्रोफेट मोहम्मद जन्मदिवस)	दिसम्बर 13	मंगलवार
17.	क्रिसमस डे	दिसम्बर 25	रविवार

टिप्पणी: केन्द्र सरकार के संस्थानों में, जिनमें औद्योगिक, वाणिज्यिक तथा प्रशिक्षण प्रतिष्ठान (यथा सचिवालयी प्रकृति से पृथक कार्य कराने वाले) शामिल हैं, इस वर्ष 16 अवकाश होंगे जिनमें से 3 (तीन) यथा गणतंत्र दिवस, स्वतंत्रता दिवस तथा महात्मा गाँधी जयंती अनिवार्य होंगे। शेष अवकाश/अवसर उन प्रतिष्ठानों/संस्थानों द्वारा प्रत्येक वर्ष स्वयं निर्धारित किए जायेंगे।

कोई विशेष/प्रतिष्ठान/संगठन औद्योगिक, वाणिज्यिक एवं व्यापारिक प्रतिष्ठान (अर्थात् सचिवालयीन प्रकृति के कार्य करने वाले प्रतिष्ठानों के अतिरिक्त) है कि नहीं इसका निर्धारण संबंधित मंत्रालय/गृह मंत्रालय, नई दिल्ली द्वारा किया जाएगा।

मुस्लिम त्यौहारों की छुट्टी के दिन चाँद के दिखने तथा राज्य सरकार द्वारा लिये गये निर्णय के आधार पर बदल सकते हैं।

Early Publication:

The following patent applications have been published under section 11A (2) of The Patents (Amendment) Act 2005 and rule 24A of The Patents (Amendment) Rules, 2006. Any person may file representation by way of opposition to the Controller of Patents at the appropriate office against the grant of the patent in the prescribed manner under section 25(1) of the Patents (Amendment) Act 2005 read with the rule 55 of The Patents (Amendment) Rules, 2006:

(12) PATENT APPLICATION PUBLICATION

(21) Application No.2845/MUMNP/2015 A

(19) INDIA

(22) Date of filing of Application :01/10/2015

(43) Publication Date : 25/12/2015

(54) Title of the invention : STEREO AUDIO ENCODER AND DECODER

(51) International classification	:G10L19/02,G10L19/008
(31) Priority Document No	:61/808,684
(32) Priority Date	:05/04/2013
(33) Name of priority country	:U.S.A.
(86) International Application No	:PCT/EP2014/056854
Filing Date	:04/04/2014
(87) International Publication No	:WO 2014/161993
(61) Patent of Addition to Application Number	:NA
Filing Date	:NA
(62) Divisional to Application Number	:NA
Filing Date	:NA

(71)**Name of Applicant :**

1)DOLBY INTERNATIONAL AB

Address of Applicant :Apollo Building 3E Herikerbergweg 1 35 NL 1101 CN Amsterdam Zuidoost Netherlands

(72)**Name of Inventor :**

1)PURNHAGEN Heiko

2)KJOERLING Kristofer

(57) Abstract :

The present disclosure provides methods devices and computer program products for encoding and decoding a stereo audio signal based on an input signal. According to the disclosure a hybrid approach of using both parametric stereo coding and a discrete representation of the stereo audio signal is used which may improve the quality of the encoded and decoded audio for certain bitrates.

No. of Pages : 31 No. of Claims : 16

(12) PATENT APPLICATION PUBLICATION
(21) Application No.4613/MUM/2015 A
(19) INDIA
(22) Date of filing of Application :07/12/2015
(43) Publication Date : 25/12/2015

(54) Title of the invention : INNOVATIVE TEST EQUIPMENT FOR FUEL QUANTITY METERING SYSTEM FOR SU-30MKI AIRCRAFT

(51) International classification	:G01F 23/00,G01F 25/00
(31) Priority Document No	:NA
(32) Priority Date	:NA
(33) Name of priority country	:NA
(86) International Application No	:NA
Filing Date	:NA
(87) International Publication No	: NA
(61) Patent of Addition to Application Number	:NA
Filing Date	:NA
(62) Divisional to Application Number	:NA
Filing Date	:NA

(71)**Name of Applicant :**
1)AIRCRAFT UPGRADE RESEARCH & DESIGN CENTRE
Address of Applicant :HINDUSTAN AERONAUTICS LIMITED NASIK DIVISION, OJHAR TOWNSHIP POST OFFICE, OJHAR (MiG), NASHIK 422 207 Maharashtra India
(72)**Name of Inventor :**
1)UG SALAWADE
2)BS PRASHANT
3)ML SHIVASHARAN
4)SK SHRIVASTVA
5)VIKAS K KAUSHIK

(57) Abstract :
Fuel quantity metering system of the aircraft consists of 07 capacitive type fuel transmitter connected in parallel and installed in the service tank of the aircraft. The sum of the capacitance value of all the 07 fuel transmitters is fed to the automatic fuel management system. Hatch covers are provided on the aircraft structure to gain access to these transmitters for maintenance purpose. These hatch covers are installed with the use of fasteners. In case of snags pertaining to fuel quantity metering system which occurs mainly due to malfunction of capacitive type fuel transmitter, it becomes necessary to check the serviceability of the same. For carrying out serviceability checks as per existing practice, hatch covers needs to be opened for gaining access to the fuel transmitter. If the fuel transmitter is found serviceable, then hatch cover of next fuel transmitter is opened for checking the serviceability. Above procedure for snag rectification of fuel quantity metering system is very time consuming and leads to increased down time of the aircraft. Hence, a need arises for design of such an equipment and methodology for easy identification/ rectification of snags pertaining to fuel quantity metering system.

No. of Pages : 6 No. of Claims : 2

(12) PATENT APPLICATION PUBLICATION
(19) INDIA
(22) Date of filing of Application :20/11/2015
(21) Application No.3312/MUMNP/2015 A
(43) Publication Date : 25/12/2015

(54) Title of the invention : METHOD AND DEVICE FOR REPRODUCING CONTENT

(51) International classification :H04N21/4722,H04N21/4728,G06F3/0488
(31) Priority Document No :1020140062621
(32) Priority Date :23/05/2014
(33) Name of priority country :Republic of Korea
(86) International Application No :PCT/KR2015/005211
Filing Date :22/05/2015
(87) International Publication No :WO 2015/178739
(61) Patent of Addition to Application Number :NA
Filing Date :NA
(62) Divisional to Application Number :NA
Filing Date :NA

(71)**Name of Applicant :**
1)SAMSUNG ELECTRONICS CO. LTD.
Address of Applicant :129 Samsung ro Yeongtong gu Suwon si Gyeonggi do 443 742 Republic of Korea
(72)**Name of Inventor :**
1)YANG Pil seung
2)PARK Da hye
3)WON Seol hye
4)YUN In kuk
5)PARK Yong gook

(57) Abstract :
Provided is a device including: a display unit configured to display handwritten content based on an analog handwritten input of a user; a user input unit that receives a user input of selecting a portion of the handwritten content displayed on the display unit; and a control unit reproduces a segment of multimedia content which corresponds to the portion of the handwritten content from the multimedia content synchronized with the handwritten content.

No. of Pages : 168 No. of Claims : 19

(12) PATENT APPLICATION PUBLICATION
(21) Application No.2775/MUM/2015 A
(19) INDIA
(22) Date of filing of Application :22/07/2015
(43) Publication Date : 25/12/2015

(54) Title of the invention : WAX APPLICATOR

(51) International classification	:B05C1/02, A47L13/30
(31) Priority Document No	:NA
(32) Priority Date	:NA
(33) Name of priority country	:NA
(86) International Application No	:NA
Filing Date	:NA
(87) International Publication No	: NA
(61) Patent of Addition to Application Number	:NA
Filing Date	:NA
(62) Divisional to Application Number	:NA
Filing Date	:NA

(71)**Name of Applicant :**
1)AMITA G. DHADPHALE
Address of Applicant :25/A GANESH, TULSHIBAGWALE COLONY, PUNE 411 009, MAHARASHTRA Maharashtra India
(72)**Name of Inventor :**
1)AMITA G. DHADPHALE

(57) Abstract :
[001] Present invention relates to the heating instrument which can be used for wax melting and its application in the process of depilation. The objective of the above said invention is to obtain an instrument which will overcome the drawbacks of the currently available instruments and which is handy, efficient, reusable, cost effective and which will make the depilation process more hygienic.
[002] In order to achieve these objectives the stated instrument has heating body with a specific shape with the spreading slit and actuating system. This instrument is configured to be hold in the hand of user and with the help of spreading slit and actuating system it helps to spread the molten wax selectively and in the form of thin film.

No. of Pages : 8 No. of Claims : 8

(12) PATENT APPLICATION PUBLICATION
(21) Application No.1495/CHE/2015 A
(19) INDIA
(22) Date of filing of Application :24/03/2015
(43) Publication Date : 25/12/2015

(54) Title of the invention : ICE AIR CONDITIONED ARMOR WITH HELMET ENCLOSURE

(51) International classification :B60R
(31) Priority Document No :NA
(32) Priority Date :NA
(33) Name of priority country :NA
(86) International Application No :NA
Filing Date :NA
(87) International Publication No : NA
(61) Patent of Addition to Application Number :NA
Filing Date :NA
(62) Divisional to Application Number :NA
Filing Date :NA

(71)**Name of Applicant :**
1)VIJAYABHASKAR VENKATESAN
Address of Applicant :No.16, Krishna Street, Sri Venkateswara Nagar, Anakaputhur, Chennai 600070 Tamil Nadu India
(72)**Name of Inventor :**
1)VIJAYABHASKAR VENKATESAN

(57) Abstract :
The present invention provides a portable device for air conditioning using ice for delivering cold air to a person includes ice cabinet, heatsink, ambient air inlet, cabinet fan, blower fan, melted-water outlet, water reservoir, ON/OFF switch, battery, cool air towards person and air for recirculation. The ice cabinet is filled with ice or dry ice for cooling purpose. The heatsink is preferably made of aluminum or copper alloy to produce cooling effect by using the thermal energy of ice. The cold air is distributed by the cabinet fan and blown out through the blower fan toward the person. The person can switch ON the cabinet fan and blower fan which allows the air to circulate uniformly to the person™s helmet. Optionally, using optimum clothing arrangement the same cold air can be circulated to the person™s entire body including their legs. Optionally, through the closed mechanism in the device, the air passes through the person can again come for recirculation. This arrangement makes the air conditioning device deliver cool air to the person for longer duration with less energy utilization.

No. of Pages : 18 No. of Claims : 13

Publication After 18 Months:

The following Patent Applications have been published under Section 11A (3) of The Patents (Amendment) Act, 2005. Any Person may file representation by way of opposition to the Controller of Patents at the appropriate office against the grant of the patent in the prescribed manner under section 25(1) of the Patents (Amendment) Act, 2005 read with the rule 55 of The Patents (Amendment) Rules, 2006:

(12) PATENT APPLICATION PUBLICATION

(21) Application No.1654/DEL/2014 A

(19) INDIA

(22) Date of filing of Application :19/06/2014

(43) Publication Date : 25/12/2015

(54) Title of the invention : A BIOTOILET SYSTEM FOR COMPLETE DIGESTION OF HUMAN FECAL MATTER WITH PURIFICATION OF EFFLUENT WATER FOR REUSE

(51) International classification	:A47K11/02
(31) Priority Document No	:NA
(32) Priority Date	:NA
(33) Name of priority country	:NA
(86) International Application No	:NA
Filing Date	:NA
(87) International Publication No	: NA
(61) Patent of Addition to Application Number	:NA
Filing Date	:NA
(62) Divisional to Application Number	:NA
Filing Date	:NA

(71)**Name of Applicant :**

1)DIRECTOR GENERAL, DEFENCE RESEARCH & DEVELOPMENT ORGANISATION

Address of Applicant :Ministry of Defence, Govt of India, Room No. 348, B Wing, DRDO Bhawan, Rajaji Marg, New Delhi 110105, India; Delhi India

(72)**Name of Inventor :**

1)CHATTERJEE, Soumya

2)VAIRALE, Mohan G.

3)PRAKASH, Aatma

4)GOGOI, Hemanta Kumar

5)VEER, Vijay

6)SINGH, Lokendra

(57) Abstract :

The invention relates to a bio toilet system for complete digestion of human fecal matter with purification of effluent water for reuse comprising a bio tank (1), a reed bed (8) disposed on the top portion of the said bio tank (1); the said bio tank (1) having plurality of partition walls (3) open at one end but closed on both bottom and top thereby creating treatment compartments (2); plurality of immobilization matrices(4) for keeping the anaerobic bacterial consortium for degradation of human waste; an inlet pipe (5) for discharge of waste from toilet into the bio tank; a gas pipe (6) going straight upward for discharge of gas if any; an outlet pipe (7) starting from near bottom of the bio tank; and optionally an additional pipe (16) for kitchen and/or bathroom waste water going inside the bio tank.

No. of Pages : 20 No. of Claims : 14

(12) PATENT APPLICATION PUBLICATION
(21) Application No.5111/DELNP/2015 A
(19) INDIA
(22) Date of filing of Application :12/06/2015
(43) Publication Date : 25/12/2015

(54) Title of the invention : ELECTROCHEMICAL BASED ANALYTICAL TEST STRIP WITH SOLUBLE ACIDIC MATERIAL COATING

(51) International classification :C12Q1/00,G01N27/327
(31) Priority Document No :1301747.0
(32) Priority Date :31/01/2013
(33) Name of priority country :U.K.
(86) International Application No :PCT/GB2014/050257
Filing Date :30/01/2014
(87) International Publication No :WO 2014/118551
(61) Patent of Addition to Application Number :NA
Filing Date :NA
(62) Divisional to Application Number :NA
Filing Date :NA

(71)**Name of Applicant :**
1)LIFESCAN SCOTLAND LIMITED
Address of Applicant :Beechwood Park North, Inverness, Inverness- shire IV2 3ED U.K.
(72)**Name of Inventor :**
1)MACFIE, Gavin
2)COOPER ,Alexander
3)LEACH ,Christopher
4)MACKINTOSH ,Stephen

(57) Abstract :
An electrochemical -based analytical test strip (EBATS) for the determination of an analyte (such as glucose) in a bodily fluid sample (for example , a whole blood sample) includes an electrically insulating base layer (110), a patterned electrically conductive layer (120) disposed on the electrically insulating base layer ,an enzymatic reagent layer (140) disposed on the patterned electrically conductor layer , a patterned spacer layer (150) , a top layer (170) having an underside surface , and a soluble acidic material coating (160) on the underside surface of the top layer. The patterned spacer layer and top layer define a sample receiving chamber (180) within the EBATS and the soluble acidic material coating is disposed on the underside surface of the top layer within the sample - receiving chamber. In addition the soluble acidic material coating is operably dissolvable in the bodily fluid sample such that a pH of the bodily fluid sample in the sample- receiving chamber is reduced during use of the EBATS.

No. of Pages : 33 No. of Claims : 29

(12) PATENT APPLICATION PUBLICATION
(19) INDIA
(22) Date of filing of Application :12/06/2015
(21) Application No.5113/DELNP/2015 A
(43) Publication Date : 25/12/2015

(54) Title of the invention : IMPROVEMENTS IN AND RELATING TO ANTENNAS

(51) International classification :H04B10/00,G02B6/36,H04J14/02
(31) Priority Document No :1222608.0
(32) Priority Date :14/12/2012
(33) Name of priority country :U.K.
(86) International Application No :PCT/GB2013/053287
Filing Date :13/12/2013
(87) International Publication No :WO 2014/091242
(61) Patent of Addition to Application Number :NA
Filing Date :NA
(62) Divisional to Application Number :NA
Filing Date :NA

(71)**Name of Applicant :**
1)BAE SYSTEMS PLC
Address of Applicant :6 Carlton Gardens, London SW1Y 5AD U.K.
(72)**Name of Inventor :**
1)AITKEN, David, John
2)GILES, Simon ,Charles
3)LONGSTONE, Robert ,John, Mark
4)NAWAZ ,Mohammed
5)SMITH, Andrew James
6)SCOTT, Michael ,Andrew

(57) Abstract :
An optical signal transmission apparatus (1) for a rotating antenna comprising a plurality of optical modulators (6) arranged for receiving a respective plurality of analogue RF signals (5) and for modulating a respective plurality of optical signals therewith to produce a plurality of modulated analogue optical signals (8). A plurality of opto -electrical converters (14) each converts a respective modulated analogue optical signal (13)into an analogue electrical signal. The plurality of optical modulators (6) are rotationally coupled in optical communication with the plurality of opto -electrical converters (14) via an optical rotary joint (10) including a reversion prism.

No. of Pages : 27 No. of Claims : 15

(12) PATENT APPLICATION PUBLICATION
(19) INDIA
(22) Date of filing of Application :12/06/2015
(21) Application No.5114/DELNP/2015 A
(43) Publication Date : 25/12/2015

(54) Title of the invention : IMPROVEMENTS IN AND RELATING TO ANTENNAS

(51) International classification :H01Q1/00,H01Q21/00,H01Q21/22
(31) Priority Document No :1222598.3
(32) Priority Date :14/12/2012
(33) Name of priority country :U.K.
(86) International Application No :PCT/GB2013/053210
Filing Date :05/12/2013
(87) International Publication No :WO 2014/091205
(61) Patent of Addition to Application Number :NA
Filing Date :NA
(62) Divisional to Application Number :NA
Filing Date :NA

(71)**Name of Applicant :**
1)BAE SYSTEMS PLC
Address of Applicant :6 Carlton Gardens, London, SW1Y 5AD U.K.
(72)**Name of Inventor :**
1)CLARK, Marcus, Edward
2)SCOTT, Michael, Andrew

(57) Abstract :
A directional antenna (1) comprising a first plurality of antenna sub arrays (2 1) forming an antenna array , a second plurality of RF receiver units (13- 19) fewer in number than the first plurality and each arranged for receiving RF signals from one or more of theantenna sub- arraysand for outputting a receiver signal accordingly. Asignal processor (20) processes thereceiver signals according to a directional antenna beam pattern. At least two non -10 neighbouring said sub arrays(2 , 5) are connected to a common one RF receiver unit (13) to provide a combined RF signal thereto.

No. of Pages : 14 No. of Claims : 8

(12) PATENT APPLICATION PUBLICATION
(21) Application No.1631/DEL/2014 A
(19) INDIA
(22) Date of filing of Application :17/06/2014
(43) Publication Date : 25/12/2015

(54) Title of the invention : A NOVEL CYCLOHEXYL CARBO-DIHYDROPYRIMIDINE THIONE COMPOUNDS AND A PROCESS FOR THE PREPARATION THEREOF

(51) International classification :C12R1/645
(31) Priority Document No :NA
(32) Priority Date :NA
(33) Name of priority country :NA
(86) International Application No :NA
Filing Date :NA
(87) International Publication No : NA
(61) Patent of Addition to Application Number :NA
Filing Date :NA
(62) Divisional to Application Number :NA
Filing Date :NA

(71)**Name of Applicant :**
1)COUNCIL OF SCIENTIFIC & INDUSTRIAL RESEARCH
Address of Applicant :ANUSANDHAN BHAWAN, RAFI MARG, NEW DELHI - 110 001, INDIA. Delhi India
(72)**Name of Inventor :**
1)DR. A. S. NAGARAJAN
2)B. SWARNA KUMARI
3)S. KAVITHA
4)DR. N. K. CHANDRA BABU
5)DR. B. S. R. REDDY

(57) Abstract :
The present invention relates to a novel cyclohexyl carbo-dihydropyrimidine thione compounds and a process for the preparation thereof. The present invention also relates to a process for the preparation of dihydropyrimidine compounds using aromatic aldehydes, diketone and urea under solvent and catalyst free conditions. The reaction time is as short as 30 minutes. The yield is as high as 80% with no generation of toxic byproduct. The invention essentially provides an ecobenign alternative to the conventional fungicides that possess environmental/health hazards. It finds enormous application in processing industries prone to fungal attack, such as leather processing industry, pharmaceutical industry.

No. of Pages : 22 No. of Claims : 9

(12) PATENT APPLICATION PUBLICATION
(19) INDIA
(22) Date of filing of Application :12/06/2015
(21) Application No.5106/DELNP/2015 A
(43) Publication Date : 25/12/2015

(54) Title of the invention : PIPELINE SYSTEM FOR FLUIDS

(51) International classification :G05D7/00,G05D16/00,G01M3/28
(31) Priority Document No :2012905225
(32) Priority Date :30/11/2012
(33) Name of priority country :Australia
(86) International Application No :PCT/AU2013/001368
Filing Date :26/11/2013
(87) International Publication No :WO 2014/082121
(61) Patent of Addition to Application Number :NA
Filing Date :NA
(62) Divisional to Application Number :NA
Filing Date :NA

(71)**Name of Applicant :**
1)RUBICON RESEARCH PTY LTD
Address of Applicant :1 Cato Street, Hawthorn, Victoria 3122 Australia
(72)**Name of Inventor :**
1)AUGHTON, David ,John

(57) Abstract :
The invention provides method and system of controlling flow rate in a pipeline network for fluids. The system includes a demand management system to monitor fluid flow rate in the pipeline network (10) and a pump (34) to increase the fluid flow rate when the demand management system determines an increase in fluid flow rate is required.

No. of Pages : 16 No. of Claims : 15

(12) PATENT APPLICATION PUBLICATION
(19) INDIA
(22) Date of filing of Application :12/06/2015
(21) Application No.5107/DELNP/2015 A
(43) Publication Date : 25/12/2015

(54) Title of the invention : AUTOMATIC CIRCUIT BREAKER WITH AUXILIARY SHORT CIRCUIT

(51) International classification	:H01H71/40,H01H71/10,H01H89/00
(31) Priority Document No	:10 2012 112 435.3
(32) Priority Date	:17/12/2012
(33) Name of priority country	:Germany
(86) International Application No	:PCT/EP2013/076971
Filing Date	:17/12/2013
(87) International Publication No	:WO 2014/095918
(61) Patent of Addition to Application Number	:NA
Filing Date	:NA
(62) Divisional to Application Number	:NA
Filing Date	:NA

(71)**Name of Applicant :**
1)PHOENIX CONTACT GMBH & CO. KG
Address of Applicant :Flachsmarktstrae 8, 32825 Blomberg Germany
(72)**Name of Inventor :**
1)SCHAPER ,Elmar
2)HEUER, Lutz
3)SCHRGENS ,Detlev
4)SCHULZ, Bernd

(57) Abstract :
The invention relates to an automatic circuit breaker (2) for protecting a phase (4, 5, 6), having an input terminal (7) , having an output terminal (8) , having a current path (12) which electrically conductively connects the input terminal (7) and the output terminal (8) , having a disconnection apparatus (13) which is arranged in the current path (12) and is designed to interrupt said current path when it is operated having a discharge terminal (9) , having a discharge path (15) which is connected at one end to the current path (12) between the disconnection apparatus (13) and the output terminal (8) and is connected at its other end to the discharge terminal (9), having a connection apparatus (16) which is arranged in the discharge path (15) and is designed to connect- through said discharge path when it is operated , and having a monitoring device (14) which is designed to monitor the current in the current path (12) and , when an overcurrent is identified , to operate the disconnection apparatus (13) and the connection apparatus (16), wherein the monitoring device (14) is designed to carry out permanent current monitoring and short- circuit current monitoring. The invention also relates to a circuit breaker arrangement (1) having a large number of automatic circuit breakers (2) of this kind.

No. of Pages : 25 No. of Claims : 11

(12) PATENT APPLICATION PUBLICATION
(21) Application No.5108/DELNP/2015 A
(19) INDIA
(22) Date of filing of Application :12/06/2015
(43) Publication Date : 25/12/2015

(54) Title of the invention : CARBON NANO TUBE PRODUCTION FROM CARBON DIOXIDE

(51) International classification :C01B31/02,C07C1/12
(31) Priority Document No :61/753488
(32) Priority Date :17/01/2013
(33) Name of priority country :U.S.A.
(86) International Application No :PCT/IB2014/058298
Filing Date :15/01/2014
(87) International Publication No :WO 2014/111862
(61) Patent of Addition to Application Number :NA
Filing Date :NA
(62) Divisional to Application Number :NA
Filing Date :NA

(71)**Name of Applicant :**
1)SAUDI BASIC INDUSTRIES COPORATION
Address of Applicant :P.O. Box 5101, Riyadh ,11422 Saudi Arabia
(72)**Name of Inventor :**
1)WEI, Chu

(57) Abstract :
Disclosed is a method for making carbon nanotubes comprising (a) reducing a nickel containing catalyst with a reducing agent in a first reaction chamber ,(b) contacting the nickel containing catalyst with carbon dioxide under conditions sufficient to produce a reaction product , (c) transferring the reaction product to a second reaction chamber , wherein the second reaction chamber comprises a Group VIII metal containing catalyst , and (d) contacting the Group VIII metal containing catalyst with the reaction product under conditions sufficient to produce carbon nanotubes , wherein the first and second reaction chambers are in flow connection during the transfer step (c) , wherein the only source of carbon used to form the carbon nanotubes is from the carbon dioxide used in step (b) , and wherein at least 20% of the carbon from the carbon dioxide used in step (b) is converted into carbon nanotubes.

No. of Pages : 30 No. of Claims : 26

(12) PATENT APPLICATION PUBLICATION
(21) Application No.5120/DELNP/2015 A
(19) INDIA
(22) Date of filing of Application :12/06/2015
(43) Publication Date : 25/12/2015

(54) Title of the invention : SYSTEM FOR THE REMOVAL OF IRON OXIDE FROM SURFACES

(51) International classification :C11D7/36,C11D7/26
(31) Priority Document No :13000245.4
(32) Priority Date :17/01/2013
(33) Name of priority country :EPO
(86) International Application No :PCT/EP2014/000129
Filing Date :17/01/2014
(87) International Publication No :WO 2014/111267
(61) Patent of Addition to Application Number :NA
Filing Date :NA
(62) Divisional to Application Number :NA
Filing Date :NA

(71)**Name of Applicant :**
1)ARCHROMA IP GMBH
Address of Applicant :Neuhofstrasse 11, CH -4153 Reinach Switzerland
(72)**Name of Inventor :**
1)HALEEM, Asad ,Bilal

(57) Abstract :
A system for the removal of heavy metal oxides from surfaces comprises the treatment with a composition comporising at least ethane 1- hydroxy- 1, 1 diphosphonic acid (HEDP) and water and an organic reducing agent. The invention is also relevant for a process for the removal of iron oxide from textiles or fabrics by treatment with a solution of the composition over a certain time period at a certain temperature in a stirred vessel.

No. of Pages : 11 No. of Claims : 10

(12) PATENT APPLICATION PUBLICATION
(21) Application No.5121/DELNP/2015 A
(19) INDIA
(22) Date of filing of Application :12/06/2015
(43) Publication Date : 25/12/2015

(54) Title of the invention : DEVICE FOR SENSORIAL EVALUATION OF CONSUMER PRODUCT APPLICATION FEEL

(51) International classification :G01N1/28,G01L5/00,G01N33/32
(31) Priority Document No :13/710086
(32) Priority Date :19/12/2012
(33) Name of priority country :U.S.A.
(86) International Application No :PCT/US2013/021363
Filing Date :14/01/2013
(87) International Publication No :WO 2014/098929
(61) Patent of Addition to Application Number :NA
Filing Date :NA
(62) Divisional to Application Number :NA
Filing Date :NA

(71)**Name of Applicant :**
1)HERCULES INCORPORATED
Address of Applicant :500 Hercules Road, Wilmington ,DE 19808 U.S.A.
(72)**Name of Inventor :**
1)VAYNBERG, Konstantin ,Abraham
2)BUCKLEY ,Jennifer, M.
3)DURST, Matthew ,Reuben
4)OWENS, Brian
5)WILKINS, Daniel ,Appel
6)NA

(57) Abstract :
A product testing assembly is described. The product testing assembly may include a substrate , a measuring device, and a data processing system. The substrate has at least one surface configured to receive an application of a product to be tested , for example paint. The measuring device is configured to sense measured quantities as product is applied to the substrate and output one or more signals representative of a sequence of forces and/or moments being applied to the surface of the substrate by the application of the product to be tested. The data processing system has one or more processors configured to receive the one or more signals representative of the sequence of forces and/or moments being applied to the surface of the substrate, and to convert the one or more signals into an output signal representative of one or more application performance characteristics of the product to be tested.

No. of Pages : 33 No. of Claims : 18

(12) PATENT APPLICATION PUBLICATION
(19) INDIA
(22) Date of filing of Application :12/06/2015

(21) Application No.5122/DELNP/2015 A
(43) Publication Date : 25/12/2015

(54) Title of the invention : IMPROVEMENTS IN ANTENNAS

(51) International classification :H01Q21/00
(31) Priority Document No :1222600.7
(32) Priority Date :14/12/2012
(33) Name of priority country :U.K.
(86) International Application No :PCT/GB2013/053259
Filing Date :11/12/2013
(87) International Publication No :WO 2014/091228
(61) Patent of Addition to Application Number :NA
Filing Date :NA
(62) Divisional to Application Number :NA
Filing Date :NA

(71)**Name of Applicant :**
1)BAE SYSTEMS PLC
Address of Applicant :6 Carlton Gardens, London SW1Y 5AD U.K.
(72)**Name of Inventor :**
1)LAIGHT, Alan ,James ,Keith
2)STAFFORD ,Jonathon,James
3)CROUCH ,Gavin, Roy
4)SCOTT ,Michael, Andrew
5)GILLIAM ,Paul ,David

(57) Abstract :
Disclosed is antenna sub- array for use in an antenna array comprising a plurality of such sub- arrays , comprising: a stripline for signal distribution, the stripline defining a plurality of signal pathways from a common feed point to a plurality of radiating elements , wherein the stripline is housed in a first support structure located a distance away from a first surface of a ground plane structure. Also disclosed is a method of manufacture and a method of cooling

No. of Pages : 21 No. of Claims : 14

(12) PATENT APPLICATION PUBLICATION
(19) INDIA
(22) Date of filing of Application :12/06/2015
(21) Application No.5123/DELNP/2015 A
(43) Publication Date : 25/12/2015

(54) Title of the invention : MONITORING SYSTEM FOR THE ALIGNMENT OF AN INLINE PRINTING PRESS

(51) International classification :B41F33/00
(31) Priority Document No :10 2012 110 910.9
(32) Priority Date :13/11/2012
(33) Name of priority country :Germany
(86) International Application No :PCT/EP2013/070057
Filing Date :26/09/2013
(87) International Publication No :WO 2014/075841
(61) Patent of Addition to Application Number :NA
Filing Date :NA
(62) Divisional to Application Number :NA
Filing Date :NA

(71)**Name of Applicant :**
1)WINDM–LLER & H–LSCHER KG
Address of Applicant :M¼nsterstr. 50, 49525 Lengerich Germany
(72)**Name of Inventor :**
1)WESTHOF ,Frank
2)VOSSEBERG, Michael
3)BRINKMANN, Clemens
4)BCKER, Heiner
5)NEUMANN ,Udo
6)DIL, B¼lent
7)BIETMANN ,Gundolf

(57) Abstract :
The invention relates to a monitoring system (10) for the alignment of printing units (110a, 110b, 100c) of an inline printing press (100) , having a sensor device (20) with at least one sensor unit (22a, 22b , 22c) for each printing unit (110a , 110b , 100c) , in order to detect the position of a printing mark (210) on a printing medium (200) , characterized in that at least one sensor unit (22b, 22c) which is arranged downstream of a first sensor unit (22a) in the course of printing can be moved transversely with respect to the conveying direction (F) of the printing medium (200).

No. of Pages : 21 No. of Claims : 14

(12) PATENT APPLICATION PUBLICATION
(19) INDIA
(22) Date of filing of Application :12/06/2015
(21) Application No.5124/DELNP/2015 A
(43) Publication Date : 25/12/2015

(54) Title of the invention : METHODS FOR PURIFYING ALUMINIUM IONS

(51) International classification :C01F7/30,C01B7/01,C01F7/00
(31) Priority Document No :61/726079
(32) Priority Date :14/11/2012
(33) Name of priority country :U.S.A.
(86) International Application No :PCT/CA2013/000963
Filing Date :14/11/2013
(87) International Publication No :WO 2014/075173
(61) Patent of Addition to Application Number :NA
Filing Date :NA
(62) Divisional to Application Number :NA
Filing Date :NA

(71)**Name of Applicant :**
1)ORBITE ALUMINAE INC.
Address of Applicant :6505 route Transcanadienne ,Bureau 610, St- Laurent, Qubec H4T 1S3 Canada
(72)**Name of Inventor :**
1)BOUDREAULT, Richard
2)FOURNIER ,Jo«l
3)DUMONT ,Hubert
4)SAMUEL, Jean -Fran§ois
5)BOUFFARD ,Jonathan
6)LEPAGE ,Sophie
7)HUARD ,Ann -Christine
8)GRAVEL- ROULEAU ,Claudia
9)LABRECQUE- GILBERT, Marie -Maxime
10)PRIMEAU, Denis;

(57) Abstract :
There are provided processes for purifying aluminum ions. Such processes comprise precipitating the aluminum ions under the form of AI(OH)3 at a first pH range; converting AI(OH)3 into AICI3 by reacting AI(OH)3 with HCI and precipitating said AICI; and heating the AICI3 under conditions effective for converting AICI into AI2O3 and optionally recovering gaseous HCI so produced. The processes can also comprise converting alumina into aluminum.

No. of Pages : 61 No. of Claims : 135

(12) PATENT APPLICATION PUBLICATION
(21) Application No.5135/DELNP/2015 A
(19) INDIA
(22) Date of filing of Application :12/06/2015
(43) Publication Date : 25/12/2015

(54) Title of the invention : PORTABLE BATTERY POWERED SELF -ILLUMINATED MULTISPECTRAL MULTI-MAGNIFICATION COLPOSCOPE

(51) International classification :A61B1/00,A61B1/06,A61B1/303
(31) Priority Document No :13/677227
(32) Priority Date :14/11/2012
(33) Name of priority country :U.S.A.
(86) International Application No :PCT/IB2013/002726
Filing Date :14/11/2013
(87) International Publication No :WO 2014/076562
(61) Patent of Addition to Application Number :NA
Filing Date :NA
(62) Divisional to Application Number :NA
Filing Date :NA

(71)**Name of Applicant :**
1)GYNIUS AB
Address of Applicant :PO Box 55503, Stockholm Sweden
(72)**Name of Inventor :**
1)SHEMER ,Isaac
2)WIKSTROEM SHEMER, Elisabeth
3)VOLSKY ,Matthew

(57) Abstract :
A portable battery powered self -illuminated multispectral multi -magnification colposcope for visual inspection of the cervix. Includes a housing, an eyepiece, at least one illuminator having two or more wavelength ranges , e.g., white and non -Red , which projects light towards a cervix of a patient. Also includes two or more discrete magnification level paths situated within the housing that pass light reflected from the cervix to the eyepiece when a selected magnification level path is selected by an operator and asserted by a controller. The controller is coupled with the at least one illuminator and the two or more discrete magnification level paths and accepts user gestures via user interface elements to select illumination and magnification settings , wherein the user interface elements may be operated with the hand of the operator that supports the apparatus.

No. of Pages : 46 No. of Claims : 26

(12) PATENT APPLICATION PUBLICATION
(21) Application No.5136/DELNP/2015 A
(19) INDIA
(22) Date of filing of Application :12/06/2015
(43) Publication Date : 25/12/2015

(54) Title of the invention : MEDIUM PROCESSING DEVICE AND MEDIUM TRANSACTION DEVICE

(51) International classification :G07D9/00,B65H29/51
(31) Priority Document No :2012278448
(32) Priority Date :20/12/2012
(33) Name of priority country :Japan
(86) International Application No :PCT/JP2013/081045
Filing Date :18/11/2013
(87) International Publication No :WO 2014/097794
(61) Patent of Addition to Application Number :NA
Filing Date :NA
(62) Divisional to Application Number :NA
Filing Date :NA

(71)**Name of Applicant :**
1)OKI ELECTRIC INDUSTRY CO., LTD.
Address of Applicant :1- 7 -12 Toranomon, Minato -ku ,Tokyo, 105-8460 Japan
(72)**Name of Inventor :**
1)ASAMURA, Masamitsu

(57) Abstract :
An objective of the present invention is to allow avoiding damage to a device or medium when carrying out maintenance work. A temporary retaining part has on the outside of the left side surface thereof an exposed manipulable knob for rotating a drum ,and a knob cover is disposed on the outside of the knob. In the temporary retaining part , when an open guide is in a closed state and the upper side of the drum is closed , the knob cover is set into a covering state by way of a stud so as to restrict manipulation of the manipulable knob and thereby prevent paper currency jamming from worsening further in advance. In addition , in the temporary retaining part, when the open guide is rotated from the closed state toward an opening direction so as to expose the upper side of the drum , the knob cover rotates to an exposure direction due to the action of a spring and is set into an exposure state , allowing for manual rotation of the drum by the manipulation of the manipulable knob with an escape path being ensured for torn paper currency.

No. of Pages : 47 No. of Claims : 9

(12) PATENT APPLICATION PUBLICATION
(19) INDIA
(22) Date of filing of Application :12/06/2015

(21) Application No.5137/DELNP/2015 A
(43) Publication Date : 25/12/2015

(54) Title of the invention : METHOD FOR GENERATING AND TRANSFERRING AT LEAST ONE DATA STREAM

(51) International classification	:H04N21/61,H04N21/643,H04N21/647
(31) Priority Document No	:12/61998
(32) Priority Date	:13/12/2012
(33) Name of priority country	:France
(86) International Application No	:PCT/EP2013/076336
Filing Date	:12/12/2013
(87) International Publication No	:WO 2014/090928
(61) Patent of Addition to Application Number	:NA
Filing Date	:NA
(62) Divisional to Application Number	:NA
Filing Date	:NA

(71)**Name of Applicant :**
1)ENENSYS TECHNOLOGIES
Address of Applicant :6 rue de la Carri¨re, F -35510 Cesson Sevigne France
(72)**Name of Inventor :**
1)ROUL, Laurent
2)POULAIN ,Ludovic
3)PICHOT, Bernard

(57) Abstract :
The present invention concerns a method for generating a stream from first and second received data streams , the data streams consisting of frames, each frame containing a synchronisation packet , a signalling packet giving information on the structure of the data stream and packets called baseband frames. The method comprises the steps of: - aligning (E54) the two received data streams by bringing the synchronisation packets or the signalling packets of the frames of each data stream into phase , identifying,- (E55), in one of the received data streams , baseband packets identifying packets of a first type,- inserting (E56), into each frame of the first received stream , baseband packets of the frame of the second stream of which the synchronisation packet is aligned with the synchronisation packet of the frame of the first stream.

No. of Pages : 30 No. of Claims : 14

(12) PATENT APPLICATION PUBLICATION
(21) Application No.5138/DELNP/2015 A
(19) INDIA
(22) Date of filing of Application :12/06/2015
(43) Publication Date : 25/12/2015

(54) Title of the invention : VACCINES WITH HIGHER CARBOHYDRATE ANTIGEN DENSITY AND NOVEL SAPONIN ADJUVANT

(51) International classification :C07H15/00,C07K16/00
(31) Priority Document No :61/748880
(32) Priority Date :04/01/2013
(33) Name of priority country :U.S.A.
(86) International Application No :PCT/US2014/010310
Filing Date :06/01/2014
(87) International Publication No :WO 2014/107652
(61) Patent of Addition to Application Number :NA
Filing Date :NA
(62) Divisional to Application Number :NA
Filing Date :NA

(71)**Name of Applicant :**
1)OBI PHARMA INC.
Address of Applicant :Room W1907 19F ,3 Yuan Qu Street, Nankang Software Park, Taipei 11503 Taiwan
2)TONY YU, Cheng, Der
(72)**Name of Inventor :**
1)LEE, Wei, Han
2)WANG, Nan -Hsuan
3)CHANG, Chung ,Hao
4)HSIEH ,Yih -Huang
5)WANG ,Cheng- Chi
6)LIN, Yu -Hsin
7)LIN, Yu -Chen
8)CHEN, I -Ju
9)YU, Cheng Der, Tony

(57) Abstract :
The present invention provides vaccines comprising carbohydrate antigen conjugated to a diphtheria toxin (DT) as a carrier protein , wherein the ratio of the number of carbohydrate antigen molecule to the carrier protein molecule is higher than 5:1. Also disclosed herein is a novel saponin adjuvant and methods to inhibit cancer cells , by administering an effective amount of the vaccine disclose herein.

No. of Pages : 55 No. of Claims : 37

(12) PATENT APPLICATION PUBLICATION
(21) Application No.1635/DEL/2014 A
(19) INDIA
(22) Date of filing of Application :17/06/2014
(43) Publication Date : 25/12/2015

(54) Title of the invention : ESSENTIAL OIL OF JUPHA AS ANTI MICROBIAL INHALANT.

(51) International classification :A61K36/53
(31) Priority Document No :NA
(32) Priority Date :NA
(33) Name of priority country :NA
(86) International Application No :NA
Filing Date :NA
(87) International Publication No : NA
(61) Patent of Addition to Application Number :NA
Filing Date :NA
(62) Divisional to Application Number :NA
Filing Date :NA

(71)**Name of Applicant :**
1)SHIV SHANKER GAUTAM
Address of Applicant :NEAR SHIVAJI PUBLIC SCHOOL, SANJAY COLONY, BAZPUR, UDHAM SINGH NAGAR, UTTARAKHAND, INDIA. 262401 Uttarakhand India
2)NAVNEET
(72)**Name of Inventor :**
1)SHIV SHANKER GAUTAM
2)NAVNEET

(57) Abstract :
The invention discloses antimicrobial usefulness of Nepeta ciliaris (Jupha) root essential oil as inhalant against respiratory tract bacterial as well as fungal organisms. The essential oil vapours are inhaled as a practical method to reduce the risks of infection by the microorganisms causing respiratory diseases. The essential oil has unique fragrance with the function of bacteriostasis and disinfection. Convenient hand-held inhaler apparatus can provide the inhalation of vapours. Aromatherapeutic products having the antimicrobial functions can be prepared also.

No. of Pages : 11 No. of Claims : 5

(12) PATENT APPLICATION PUBLICATION
(19) INDIA
(22) Date of filing of Application :12/06/2015
(21) Application No.5130/DELNP/2015 A
(43) Publication Date : 25/12/2015

(54) Title of the invention : MITIGATION OF ANOMALOUS PROPAGATION EFFECTS IN RADAR

(51) International classification :G01S7/292,G01S7/41
(31) Priority Document No :12275205.8
(32) Priority Date :14/12/2012
(33) Name of priority country :EPO
(86) International Application No :PCT/GB2013/053263
Filing Date :12/12/2013
(87) International Publication No :WO 2014/091230
(61) Patent of Addition to Application Number :NA
Filing Date :NA
(62) Divisional to Application Number :NA
Filing Date :NA

(71)**Name of Applicant :**
1)BAE SYSTEMS PLC
Address of Applicant :6 Carlton Gardens, London SW1Y 5AD U.K.
(72)**Name of Inventor :**
1)ROBINSON, Bryan;
2)TURNER, Noel;

(57) Abstract :
Disclosed is a method of mitigating the effects of anomalous propagation in a Radar system, comprising the steps of: receiving a plurality of returns from a plurality of transmit pulses; calculating a difference in magnitude between each of the plurality of returns and its successor; if one of the calculated differences indicates a first step change greater than a first predetermined threshold , calculating a first average magnitude of the returns received after the first step change , and replacing the returns received before the first step change with synthesised returns having a magnitude equal to the first calculated average magnitude.

No. of Pages : 28 No. of Claims : 8

(12) PATENT APPLICATION PUBLICATION
(19) INDIA
(22) Date of filing of Application :12/06/2015
(21) Application No.5131/DELNP/2015 A
(43) Publication Date : 25/12/2015

(54) Title of the invention : METHODS AND SYSTEMS FOR PEER- TO- PEER DISCOVERY AND CONNECTION FROM A COLLABORATIVE APPLICATION SESSION

(51) International classification :H04L12/407,H04L29/06
(31) Priority Document No :61/729481
(32) Priority Date :23/11/2012
(33) Name of priority country :U.S.A.
(86) International Application No :PCT/IB2013/003134
Filing Date :25/11/2013
(87) International Publication No :WO 2014/080293
(61) Patent of Addition to Application Number :NA
Filing Date :NA
(62) Divisional to Application Number :NA
Filing Date :NA

(71)**Name of Applicant :**
1)CALGARY SCIENTIFIC INC.
Address of Applicant :1210- 20th Avenue Se, Suite 208, Calgary ,Alberta, T2G 1M8 Canada
(72)**Name of Inventor :**
1)LEITCH ,Sam, Anthony

(57) Abstract :
Methods and systems are provided herein for initiating real- time, peer -to -peer communication from a collaborative session. Real -time, peer- to -peer communication includes sharing content such as media content over a peer- to -peer connection such as peer- to -peer conferencing , for example. More particularly, from within the collaborative session where a plurality of clients collaboratively interact with a remotely -accessed application , for example ,the systems and methods enable discovery of the clients actively participating in the collaborative session (e.g., peer nodes) and enable establishment of peer -to -peer connection(s) between pairs of the clients.

No. of Pages : 38 No. of Claims : 31

(12) PATENT APPLICATION PUBLICATION
(21) Application No.5132/DELNP/2015 A
(19) INDIA
(22) Date of filing of Application :12/06/2015
(43) Publication Date : 25/12/2015

(54) Title of the invention : CONTROL CIRCUIT OF LIGHT -EMITTING DIODE LIGHTING APPARATUS

(51) International classification :H05B37/02,H05B33/08
(31) Priority Document No :1020120157279
(32) Priority Date :28/12/2012
(33) Name of priority country :Republic of Korea
(86) International Application No :PCT/KR2013/012350
Filing Date :27/12/2013
(87) International Publication No :WO 2014/104843
(61) Patent of Addition to Application Number :NA
Filing Date :NA
(62) Divisional to Application Number :NA
Filing Date :NA

(71)**Name of Applicant :**
1)SILICON WORKS CO., LTD.
Address of Applicant :707 Tamnip- dong, Yuseong- gu, Daejeon -si,305 510 Republic of Korea
(72)**Name of Inventor :**
1)KIM Yong Goo
2)LEE Won Ji
3)KIM Kyung Min
4)LEE Jong Min
5)SON Young Suk

(57) Abstract :
Disclosed is a control circuit of an LED lighting apparatus having a dimming function. The control circuit provides a current path corresponding to light emitting states of LED channels in response to a rectified voltage,and performs dimming by controlling a current amount of the current path in response to a dimming control signal provided as an analog signal or digital signal.

No. of Pages : 72 No. of Claims : 20

(12) PATENT APPLICATION PUBLICATION
(21) Application No.5133/DELNP/2015 A
(19) INDIA
(22) Date of filing of Application :12/06/2015
(43) Publication Date : 25/12/2015

(54) Title of the invention : VEHICLE BODY REAR STRUCTURE

(51) International classification :B62D35/00,B62D25/08
(31) Priority Document No :2012271493
(32) Priority Date :12/12/2012
(33) Name of priority country :Japan
(86) International Application No :PCT/JP2013/082841
Filing Date :06/12/2013
(87) International Publication No :WO 2014/092018
(61) Patent of Addition to Application Number :NA
Filing Date :NA
(62) Divisional to Application Number :NA
Filing Date :NA

(71)**Name of Applicant :**
1)TOYOTA JIDOSHA KABUSHIKI KAISHA
Address of Applicant :1, Toyota- cho ,Toyota -shi ,Aichi 4718571 Japan
(72)**Name of Inventor :**
1)KISHIMA Fumihiko

(57) Abstract :
In a vehicle (10) in which a vehicle body rear structure (S) is used a first opening (40) is formed in a vertical wall section (36), and a second opening (54) is formed in an underfloor section (28). Thus , a portion of airflow (A) flows into the first opening (40) and hits the rear surface of an inclined wall section (46), and is released at the back of the vehicle from the second opening (54). Meanwhile , the airflow (A) that does not flow into the first opening (40) flows along the vertical wall section (36) to the inclined wall section (46) in such a manner as to be pulled by the airflow (A) that flowed into the first opening (40). Thus , the airflow (A) that does not flow inside the first opening (40) flows along the inclined wall section (46) to the back of the vehicle. Consequently , separation of the airflow (A) in the inclined wall section (46) is minimized ,and the airflow (A) flows along the underfloor section (28) of the vehicle to the back of the vehicle , thus enabling a reduction in handling stability due to air flowing into a rear wheel house (12) from the side of the vehicle (10) to be minimized.

No. of Pages : 27 No. of Claims : 4

(12) PATENT APPLICATION PUBLICATION
(19) INDIA
(22) Date of filing of Application :31/07/2014
(21) Application No.2167/DEL/2014 A
(43) Publication Date : 25/12/2015

(54) Title of the invention : SYSTEM AND METHOD FOR VISUALIZATION OF HISTORY OF EVENTS USING BIM MODEL

(51) International classification :G08B 13/196
(31) Priority Document No :13/962228
(32) Priority Date :08/08/2013
(33) Name of priority country :U.S.A.
(86) International Application No :PCT//
Filing Date :01/01/1900
(87) International Publication No : NA
(61) Patent of Addition to Application Number :NA
Filing Date :NA
(62) Divisional to Application Number :NA
Filing Date :NA

(71)**Name of Applicant :**
1)HONEYWELL INTERNATIONAL INC.
Address of Applicant :101 Columbia Road, P. O. Box 2245, Morristown, N.J. 07962-2245, United States of America U.S.A.
(72)**Name of Inventor :**
1)MALAYAPPAN GURUDOSS
2)VINOTH DHARMALINGAM
3)KALPANA JANAPATI
4)VISWANATHAN CHATAPURAM KRISHNAN
5)VINAY VENKATESH
6)PAUL M. POPOWSKI

(57) Abstract :
A method and apparatus including the steps of a building information model (BIM) of a security system providing a three-dimensional view of a secured area of the security system including the physical location of any sensors of the security system, an input device of the security system receiving from a user a starting time and ending time of a time interval of interest and a processor of the security system displaying the three-dimensional view of the secured area including a time scale showing the starting time on one end of the time scale and the ending time at an opposing end of the time scale and a respective popup of details for each corresponding sensor of at least some sensors of the security system activated during the time interval of interest, each respective popup graphically connected to the physical location of the corresponding sensor within the three dimensional view.

No. of Pages : 18 No. of Claims : 15

(12) PATENT APPLICATION PUBLICATION
(19) INDIA
(22) Date of filing of Application :31/07/2014
(21) Application No.2168/DEL/2014 A
(43) Publication Date : 25/12/2015

(54) Title of the invention : WASHING MACHINE HAVING DRYING APPARATUS

(51) International classification	:F26B 25/00
(31) Priority Document No	:10-2012-0004709
(32) Priority Date	:01/08/2013
(33) Name of priority country	:Republic of Korea
(86) International Application No	:NA
Filing Date	:NA
(87) International Publication No	: NA
(61) Patent of Addition to Application Number	:NA
Filing Date	:NA
(62) Divisional to Application Number	:NA
Filing Date	:NA

(71)**Name of Applicant :**
1)SAMSUNG ELECTRONICS CO., LTD.
Address of Applicant :129, SAMSUNG-RO, YEONGTONG-GU, SUWON-SI, GYEONGGI-DO, REPUBLIC OF KOREA Republic of Korea
(72)**Name of Inventor :**
1)LEE, JUNG HEE
2)PARK, WAN GI
3)KIM, HYUN MOOK
4)SINGH, AMITOJ
5)BHUTIA, KARMA
6)JUN, KAB JIN
7)CHOI, JI HOON

(57) Abstract :
A washing machine having a drying apparatus, which can perform a heated drying operation and shorten a drying time of laundry, is provided. The washing machine having a drying apparatus includes a top cover which is provided in an upper part of a body and has at least one air hole formed in a top surface thereof, a drying duct which is provided in the top cover to supply air heated by a heater provided thereinside to the air hole, and a rack member which is provided to be extractable from the body to hang laundry above the body.

No. of Pages : 27 No. of Claims : 11

(12) PATENT APPLICATION PUBLICATION
(19) INDIA
(22) Date of filing of Application :31/07/2014
(21) Application No.6454/DELNP/2014 A
(43) Publication Date : 25/12/2015

(54) Title of the invention : ENHANCED OIL RECOVERY PROCESS USING LOW SALINITY WATER

(51) International classification :E21B43/20
(31) Priority Document No :61/596789
(32) Priority Date :09/02/2012
(33) Name of priority country :U.S.A.
(86) International Application No :PCT/EP2013/052614
Filing Date :08/02/2013
(87) International Publication No :WO 2013/117741
(61) Patent of Addition to Application Number :NA
Filing Date :NA
(62) Divisional to Application Number :NA
Filing Date :NA

(71)**Name of Applicant :**
1)BP EXPLORATION OPERATING COMPANY LIMITED
Address of Applicant :Chertsey Road Sunbury on Thames Middlesex TW16 7BP U.K.
(72)**Name of Inventor :**
1)JERAULD Gary Russell
2)MOHAMMADI Hourshad

(57) Abstract :
A method of recovering oil from a subterranean oil bearing reservoir uses an injection fluid comprising a viscosifying polymer in a low salinity water. The reservoir is penetrated by one or more injection wells and by one or more production wells. The method comprises injecting the injection fluid into at least one of the injection wells in a slug size in the range of 0.4 to 1.5 pore volumes (PV).

No. of Pages : 50 No. of Claims : 23

(12) PATENT APPLICATION PUBLICATION
(19) INDIA
(22) Date of filing of Application :31/07/2014
(21) Application No.6455/DELNP/2014 A
(43) Publication Date : 25/12/2015

(54) Title of the invention : SUTURE DISTAL LOCKING FOR INTRAMEDULLARY NAIL

(51) International classification :A61B17/72
(31) Priority Document No :61/597352
(32) Priority Date :10/02/2012
(33) Name of priority country :U.S.A.
(86) International Application No :PCT/US2013/023756
Filing Date :30/01/2013
(87) International Publication No :WO 2013/119434
(61) Patent of Addition to Application Number :NA
Filing Date :NA
(62) Divisional to Application Number :NA
Filing Date :NA

(71)**Name of Applicant :**
1)SYNTHES GMBH
Address of Applicant :Eimattstrasse 3 CH 4436 Oberdorf Switzerland
(72)**Name of Inventor :**
1)BOUDUBAN Nicolas
2)BURKI Patrick
3)NARDINI Reto

(57) Abstract :
A system for locking an intramedullary nail to a bone includes a first plate sized and shaped to be inserted through a channel of an intramedullary nail and dimensioned to prevent its passing through a locking hole of the intramedullary nail and a second plate sized and shaped to be positioned along a portion of an exterior of a hole drilled in the bone and dimensioned to prevent its passing through the hole drilled in the bone along with a connector couplable to the first and second plates and slidable through the channel of the intramedullary nail to extend through the locking hole from an interior of the channel to an exterior of a bone in which the intramedullary nail has been inserted.

No. of Pages : 16 No. of Claims : 11

(12) PATENT APPLICATION PUBLICATION
(21) Application No.6457/DELNP/2014 A
(19) INDIA
(22) Date of filing of Application :31/07/2014
(43) Publication Date : 25/12/2015

(54) Title of the invention : HIGH FLOW HYDROGENATED STYRENE BUTADIENE STYRENE BLOCK COPOLYMER AND APPLICATIONS

(51) International classification :C09D153/02
(31) Priority Document No :13/404150
(32) Priority Date :24/02/2012
(33) Name of priority country :U.S.A.
(86) International Application No :PCT/US2013/027009
Filing Date :21/02/2013
(87) International Publication No :WO 2013/148024
(61) Patent of Addition to Application Number :NA
Filing Date :NA
(62) Divisional to Application Number :NA
Filing Date :NA

(71)**Name of Applicant :**
1)KRATON POLYMERS U.S. LLC
Address of Applicant :16400 Park Row Houston TX 77084 U.S.A.
(72)**Name of Inventor :**
1)FLOOD John
2)WRIGHT Kathryn
3)SALAZAR Lydia
4)KLUTTZ Robert Q
5)DUBOIS Donn
6)WIEGAND Troy
7)MASUKO Norio

(57) Abstract :
The invention relates to unique applications for novel high melt flow low viscosity selectively hydrogenated styrene butadiene styrene (hSBS) or selectively hydrogenated controlled distribution styrene butadiene/styrene styrene (hSBSS) block copolymers wherein the melt flow rate of said block copolymer is at least 100 g/10 min (230°C / 2.16kg) according to ASTM D1238. These block copolymers have exceptionally high melt flow rate while also possessing high strength and elasticity. The inventive styrenic block copolymers have applications that prior to the present invention were not normally possible due to the normal low melt flow rate of styrenic block copolymers. The present invention also encompasses various fields of use such as a fiberglass hSBS or hSBSS reinforced mat low viscosity hSBS or hSBSS coatings for industrial uses hot melt adhesives prepared from hSBS or hSBSS blended with polyalpha olefins and elastic film fiber and nonwoven constructions using hSBS or hSBSS.

No. of Pages : 41 No. of Claims : 49

(12) PATENT APPLICATION PUBLICATION
(19) INDIA
(22) Date of filing of Application :11/08/2015
(21) Application No.7041/DELNP/2015 A
(43) Publication Date : 25/12/2015

(54) Title of the invention : PREFORM OF PLASTIC MATERIAL WITH LIGHTENED CLOSED END

(51) International classification :B29B11/14
(31) Priority Document No :MI2013A000115
(32) Priority Date :25/01/2013
(33) Name of priority country :Italy
(86) International Application No :PCT/IB2014/058427
Filing Date :21/01/2014
(87) International Publication No :WO 2014/115074
(61) Patent of Addition to Application Number :NA
Filing Date :NA
(62) Divisional to Application Number :NA
Filing Date :NA

(71)**Name of Applicant :**
1)CONCORDIA DEVELOPMENT S.R.L.
Address of Applicant :Via Valvassori Peroni Carlo 55 I 20133 Milano Italy
(72)**Name of Inventor :**
1)PAGLIACCI Gianfilippo

(57) Abstract :
Preform made of plastic material for the manufacturing of hollow bodies through a blow moulding process in which said preform comprises a substantially cylindrical body (1) having an open end (2) and a closed end {4) in which said closed end (4) has an outer surface with a varying curvature which is entirely enveloped within a hemispherical surface having a radius equal to the outer radius (R) of the cylindrical body (1) of the preform said outer surface with varying curvature being tangent to the hemispherical surface in which it is enveloped in correspondence of the circular crown C and of the preform vertex.

No. of Pages : 19 No. of Claims : 12

(12) PATENT APPLICATION PUBLICATION
(19) INDIA
(22) Date of filing of Application :11/08/2015
(21) Application No.7042/DELNP/2015 A
(43) Publication Date : 25/12/2015

(54) Title of the invention : A BLISTER PIERCING ELEMENT FOR A DRY POWDER INHALER

(51) International classification :A61M15/00
(31) Priority Document No :1301192.9
(32) Priority Date :23/01/2013
(33) Name of priority country :U.K.
(86) International Application No :PCT/GB2014/050132
Filing Date :17/01/2014
(87) International Publication No :WO 2014/114916
(61) Patent of Addition to Application Number :NA
Filing Date :NA
(62) Divisional to Application Number :NA
Filing Date :NA

(71)**Name of Applicant :**
1)VECTURA DELIVERY DEVICES LIMITED
Address of Applicant :One Prospect West Chippenham Wiltshire SN14 6FH U.K.
(72)**Name of Inventor :**
1)WILSON Peter
2)MELINIOTIS Andreas

(57) Abstract :
A blister piercing element for puncturing the lid of a blister containing a dose of medicament for inhalation by a user is disclosed. It comprises a body having a surface and an opening in the surface for the passage of air or for the passage of medicament entrained in air through the body. The body includes a pair of spaced cutting teeth upstanding from the surface in spaced side by side relation each cutting tooth projecting in cantilevered form over said opening and each having a distal cutting edge at a free end remote from said surface. The distal cutting edge of each tooth is configured to initiate a slit in a blister lid when pressure is applied to a blister lid by the teeth and the teeth are spaced from each other so that separate slits cut by the distal cutting edge of each tooth propagate in a direction toward each other between the teeth as the teeth continue to penetrate a blister lid. The pair of spaced cutting teeth form a single slit in a blister lid that defines a single flap which is folded into the blister by the teeth.

No. of Pages : 22 No. of Claims : 14

(12) PATENT APPLICATION PUBLICATION
(19) INDIA
(22) Date of filing of Application :11/08/2015
(21) Application No.7043/DELNP/2015 A
(43) Publication Date : 25/12/2015

(54) Title of the invention : CONTAINER FOR STORING BOLD AMMUNITION ON A SHIP

(51) International classification :F42B39/16,F42B39/28,F42B39/24
(31) Priority Document No :10 2013 201 012.5
(32) Priority Date :23/01/2013
(33) Name of priority country :Germany
(86) International Application No :PCT/EP2014/050339
Filing Date :09/01/2014
(87) International Publication No :WO 2014/114502
(61) Patent of Addition to Application Number :NA
Filing Date :NA
(62) Divisional to Application Number :NA
Filing Date :NA

(71)**Name of Applicant :**
1)THYSSENKRUPP MARINE SYSTEMS GMBH
Address of Applicant :Werftstrae 112 114 24143 Kiel Germany
(72)**Name of Inventor :**
1)KNUHR Kay
2)WIRIG Robert

(57) Abstract :
A container (2) for storing bold ammunition on a ship particularly on a submarine comprising a cover (2) which is hermetically connected to the container (2) in the closed state and allows the bold ammunition to be removed in the open state and a chassis (6) by means of which the container (2) can be fastened to a ship wall in a shock proof manner and in which the container (2) can be stored in two positions a first shock proof storage position and a second removal position.

No. of Pages : 14 No. of Claims : 11

(12) PATENT APPLICATION PUBLICATION
(21) Application No.7044/DELNP/2015 A
(19) INDIA
(22) Date of filing of Application :11/08/2015
(43) Publication Date : 25/12/2015

(54) Title of the invention : METHOD FOR CHECKING MULTIPLE SPATIALLY DISTRIBUTED PROTECTIVE DEVICES OF AN ENERGY SUPPLY NETWORK AND CORRESPONDING CHECKING SYSTEM

(51) International classification	:H02H3/00,G01R31/327,H02H3/04
(31) Priority Document No	:13155926.2
(32) Priority Date	:20/02/2013
(33) Name of priority country	:EPO
(86) International Application No	:PCT/EP2014/053190
Filing Date	:19/02/2014
(87) International Publication No	:WO 2014/128144
(61) Patent of Addition to Application Number	:NA
Filing Date	:NA
(62) Divisional to Application Number	:NA
Filing Date	:NA

(71)**Name of Applicant :**
1)OMICRON ELECTRONICS GMBH
Address of Applicant :Oberes Ried 1 A 6833 Klaus Austria
(72)**Name of Inventor :**
1)HENSLER Thomas
2)SCHWABE Stefan

(57) Abstract :
The invention relates to a method for checking multiple spatially distributed protective devices (SE SE) of an energy supply network (3). In the event of a fault (5) in the energy supply network (3) each of the protective devices (SE SE) is designed to insulate the fault (5) in the energy supply network (3). The method has the following steps: a: generating an initial check sequence b: outputting the check sequence to the protective devices (SE SE) c: detecting outputs of the protective devices (SE SE) said protective devices (SE SE) outputting the outputs on the basis of the check sequence and d: analyzing the outputs and generating inputs for the protective devices (SE SE) depending on the outputs. If the inputs are not components of the check sequence the inputs are incorporated into the check sequence and the method is continued from step b otherwise the method is continued from step e: evaluating all the outputs of the protective devices (SE SE). Each check sequence comprises inputs in the form of process variables of the energy supply network (3) for at least one of the protective devices (SE SE).

No. of Pages : 23 No. of Claims : 13

(12) PATENT APPLICATION PUBLICATION
(21) Application No.6445/DELNP/2014 A
(19) INDIA
(22) Date of filing of Application :31/07/2014
(43) Publication Date : 25/12/2015

(54) Title of the invention : PROCESS FOR PREPARING BUTADIENE AND/OR BUTENES FROM N BUTANE

(51) International classification :C07C7/08
(31) Priority Document No :12153056.2
(32) Priority Date :30/01/2012
(33) Name of priority country :EPO
(86) International Application No :PCT/EP2013/051763
Filing Date :30/01/2013
(87) International Publication No :WO 2013/113743
(61) Patent of Addition to Application Number :NA
Filing Date :NA
(62) Divisional to Application Number :NA
Filing Date :NA

(71)**Name of Applicant :**
1)BASF SE
Address of Applicant :67056 Ludwigshafen Germany
(72)**Name of Inventor :**
1)GIESA Sonja
2)BENFER Regina

(57) Abstract :
The process for preparing butadiene from n butane comprises the steps of A) providing an input gas stream a comprising n butane; B) feeding the input gas stream a comprising n butane into at least one first dehydrogenation zone; C) compressing in at least one first compression stage and cooling the gas stream b; D) absorption of the butenes and of the stream c2 comprising butadiene n butane hydrogen water vapour possibly inert gases and possibly carbon oxides with a selective solvent; E) extractive distillation of the selective solvents; F) distillation of the selective solvents; G) feeding the stream f and an oxygenous gas into at least one second dehydrogenation zone and oxidatively dehydrogenating 1 butene and 2 butenes.

No. of Pages : 36 No. of Claims : 16

(12) PATENT APPLICATION PUBLICATION
(19) INDIA
(22) Date of filing of Application :31/07/2014
(21) Application No.6446/DELNP/2014 A
(43) Publication Date : 25/12/2015

(54) Title of the invention : HALL EFFECT THRUSTER

(51) International classification :H05H1/54
(31) Priority Document No :1251055
(32) Priority Date :06/02/2012
(33) Name of priority country :France
(86) International Application No :PCT/FR2013/050242
Filing Date :05/02/2013
(87) International Publication No :WO 2013/117856
(61) Patent of Addition to Application Number :NA
Filing Date :NA
(62) Divisional to Application Number :NA
Filing Date :NA

(71)**Name of Applicant :**
1)SNECMA
Address of Applicant :2 boulevard du Gnral Martial Valin F 75015 Paris France
(72)**Name of Inventor :**
1)VIAL Vanessa Marjorie
2)MOYON Jo«l

(57) Abstract :
The invention relates to the field of Hall effect thrusters and in particular to a thruster (1) the downstream end of the annular channel (2) of which has a variable cross section so as to be capable of varying the thrust and specific impulse.

No. of Pages : 18 No. of Claims : 7

(12) PATENT APPLICATION PUBLICATION
(19) INDIA
(22) Date of filing of Application :31/07/2014
(21) Application No.6448/DELNP/2014 A
(43) Publication Date : 25/12/2015

(54) Title of the invention : BRAKE LINING FOR RAILWAY VEHICLE AND DISC BRAKE WITH SAME

(51) International classification :B61H5/00
(31) Priority Document No :2012029158
(32) Priority Date :14/02/2012
(33) Name of priority country :Japan
(86) International Application No :PCT/JP2013/000560
Filing Date :01/02/2013
(87) International Publication No :WO 2013/121731
(61) Patent of Addition to Application Number :NA
Filing Date :NA
(62) Divisional to Application Number :NA
Filing Date :NA

(71)**Name of Applicant :**
1)NIPPON STEEL & SUMITOMO METAL CORPORATION
Address of Applicant :6 1 Marunouchi 2 chome Chiyoda ku Tokyo 1008071 Japan
(72)**Name of Inventor :**
1)SAKAYAMA Yuiko
2)KATOU Takanori
3)SAKAGUCHI Atsushi

(57) Abstract :
A disc brake for a railway vehicle uses a floating brake caliper. The disc brake is configured so that a lining which is held by a caliper arm located on the side where a pressing drive source is not provided comprises: a friction member which faces the sliding surface of the disc affixed to either a wheel or an axle of the railway vehicle; a base plate which holds at the front surface thereof the friction member; and a guide plate which is secured to the center of back surface of the base plate and which is received in a recess in the caliper arm. The front surface of the base plate is parallel to the sliding surface of the friction member the thickness of the base plate is greater on the inner peripheral side thereof than on the outer peripheral side thereof the thickness of the guide plate is less than the depth of the recess in the caliper arm and the guide plate is loosely fitted in the recess in the caliper arm with the sliding surface of the friction member facing the sliding surface of the disc so as to be parallel thereto. As a result of this configuration the durability of the disc brake is improved on the side where the pressing drive source is not provided.

No. of Pages : 29 No. of Claims : 5

(12) PATENT APPLICATION PUBLICATION
(21) Application No.7057/DELNP/2015 A
(19) INDIA
(22) Date of filing of Application :11/08/2015
(43) Publication Date : 25/12/2015

(54) Title of the invention : METHOD AND SYSTEM FOR NETWORK ASSISTED INTERFERENCE SUPPRESSION/CANCELATION

(51) International classification :H04W28/16,H04W24/10
(31) Priority Document No :NA
(32) Priority Date :NA
(33) Name of priority country :NA
(86) International Application No :PCT/JP2013/000665
Filing Date :07/02/2013
(87) International Publication No :WO 2014/122688
(61) Patent of Addition to Application Number :NA
Filing Date :NA
(62) Divisional to Application Number :NA
Filing Date :NA

(71)**Name of Applicant :**
1)NEC CORPORATION
Address of Applicant :7 1 Shiba 5 chome Minato ku Tokyo 1088001 Japan
(72)**Name of Inventor :**
1)LIU Le
2)ISHII Naoto
3)KAKURA Yoshikazu

(57) Abstract :
A system which can achieve effective interference suppression/cancelation in downlink coordinated multi point (CoMP) transmission is provided. The system has a network including multiple points which are capable of communicating with a user equipment wherein the network sends information related to an interfering point to the user equipment for interference suppression or cancelation at the user equipment wherein the interfering point is a candidate for a coordinated multi point measurement set of the user equipment but not selected for any coordinated multi point scheme.

No. of Pages : 45 No. of Claims : 34

(12) PATENT APPLICATION PUBLICATION
(21) Application No.7058/DELNP/2015 A
(19) INDIA
(22) Date of filing of Application :11/08/2015
(43) Publication Date : 25/12/2015

(54) Title of the invention : VOLTAGE MEASUREMENT DEVICE

(51) International classification :G01R15/06,G01R19/00
(31) Priority Document No :NA
(32) Priority Date :NA
(33) Name of priority country :NA
(86) International Application No :PCT/JP2013/059559
Filing Date :29/03/2013
(87) International Publication No :WO 2014/155680
(61) Patent of Addition to Application Number :NA
Filing Date :NA
(62) Divisional to Application Number :NA
Filing Date :NA

(71)**Name of Applicant :**
1)TOSHIBA MITSUBISHI ELECTRIC INDUSTRIAL SYSTEMS CORPORATION
Address of Applicant :3 1 1 Kyobashi Chuo ku Tokyo 1040031 Japan
(72)**Name of Inventor :**
1)SUZUKI Takeo
2)MATSUDA Shigehiko

(57) Abstract :
In order to provide a voltage measurement device that can measure the DC voltage of a measurement target without making contact with same this voltage measurement device is provided with the following: a dielectric provided so as to be able to face a conductor being measured; an electrode provided on said dielectric; a capacitor that when connected to said electrode holds an electric potential that exhibits a one to one correlation with the electric potential of the electrode; and a switch provided so as to be able to connect the electrode and the capacitor to each other and also provided so as to be able to output the voltage across the terminals of the capacitor when the electrode and the capacitor are disconnected from each other.

No. of Pages : 28 No. of Claims : 4

(12) PATENT APPLICATION PUBLICATION
(19) INDIA
(22) Date of filing of Application :31/07/2014
(21) Application No.6458/DELNP/2014 A
(43) Publication Date : 25/12/2015

(54) Title of the invention : SYSTEMS AND METHODS FOR CREATING AND MANAGING MARKETING APPLICATIONS EVENTS PROMOTIONS AND PUBLICATIONS

(51) International classification :G06Q37/00
(31) Priority Document No :61594777
(32) Priority Date :03/02/2012
(33) Name of priority country :U.S.A.
(86) International Application No :PCT/US2013/024326
Filing Date :01/02/2013
(87) International Publication No :WO 2013/116635
(61) Patent of Addition to Application Number :NA
Filing Date :NA
(62) Divisional to Application Number :NA
Filing Date :NA

(71)**Name of Applicant :**
1)SEARS BRANDS LLC
Address of Applicant :3333 Beverly Road Hoffman Estates Illinois 60179 U.S.A.
(72)**Name of Inventor :**
1)GILLILAND Christine
2)BURKE Veda Christina
3)KLAWIKOWSKI David
4)CUMBERLAND Michael
5)KHATKHATAY Asim Abbas
6)VARGHESE Aby
7)BHATTACHARJEE Ranajit
8)DAS R Vipin

(57) Abstract :
Certain embodiments provide systems and methods for creation and management of marketing applications events promotions and publications. The system includes a user input device configured to provide a user input for one or more applications. The system includes a display configured to display information from the one or more applications. The system includes a processing unit communicatively coupled to the user input device and the display. The processing unit is configured to execute one or more application to create the promotional activity configure the promotional activity and associate an offer with the configured promotional activity.

No. of Pages : 54 No. of Claims : 21

(12) PATENT APPLICATION PUBLICATION
(21) Application No.7051/DELNP/2015 A
(19) INDIA
(22) Date of filing of Application :11/08/2015
(43) Publication Date : 25/12/2015

(54) Title of the invention : CUTTING TOOL

(51) International classification :B23B27/14,B23C5/16
(31) Priority Document No :2013037401
(32) Priority Date :27/02/2013
(33) Name of priority country :Japan
(86) International Application No :PCT/JP2013/082221
Filing Date :29/11/2013
(87) International Publication No :WO 2014/132512
(61) Patent of Addition to Application Number :NA
Filing Date :NA
(62) Divisional to Application Number :NA
Filing Date :NA

(71)**Name of Applicant :**
1)KYOCERA CORPORATION
Address of Applicant :6 Takeda Tobadono cho Fushimi ku Kyoto shi Kyoto 6128501 Japan
(72)**Name of Inventor :**
1)MAKINOTakahiko

(57) Abstract :
To provide a cutting tool of high abrasion resistance and defect resistance wherein occurrence of thermal cracking in the cutting edge is limited even during processing in which the cutting edge becomes hot as in the cutting of heat resistant alloys. [Solution] A cutting tool obtained from a superhard alloy wherein: WC phases are the main constituent; Co and Cr are contained in proportions of 11.5 12.5 mass% Co and 0.2 0.6 mass% Cr calculated as CrC; the mean particle size of the WC phases is 0.85 1.05 μm; the coercive force (Hc) is 13.0 16.0 kA/m; and the Rockwell hardness (HRA) is 89.5 90.5.

No. of Pages : 40 No. of Claims : 9

(12) PATENT APPLICATION PUBLICATION
(21) Application No.7052/DELNP/2015 A
(19) INDIA
(22) Date of filing of Application :11/08/2015
(43) Publication Date : 25/12/2015

(54) Title of the invention : MEGLUMINE SALT FORMS OF 2 ((1 R 4R) 4 (4 (5 (BENZOXAZOL 2 YLAMINO)PYRIDIN 2 YL)PHENYL)CYCLOHEXYL) ACETIC ACID AND THEIR USE AS DGAT1 INHIBITORS

(51) International classification :C07D413/12,A61K31/4439,A61P3/04
(31) Priority Document No :61/751443
(32) Priority Date :11/01/2013
(33) Name of priority country :U.S.A.
(86) International Application No :PCT/US2014/011005
Filing Date :10/01/2014
(87) International Publication No :WO 2014/110344
(61) Patent of Addition to Application Number :NA
Filing Date :NA
(62) Divisional to Application Number :NA
Filing Date :NA

(71)**Name of Applicant :**
1)NOVARTIS AG
Address of Applicant :Lichtstrasse 35 CH 4056 Basel Switzerland
(72)**Name of Inventor :**
1)CAPACCI DANIEL Christina
2)DELACRUZ Marilyn
3)GONG Baoqing
4)JAIN Akash
5)LU Yansong
6)ZHANG Lijun

(57) Abstract :
The present invention relates to novel crystalline forms of meglumine salts of 2 ((1 R 4R) 4 (4 (5 (benzo[d]oxazol 2 ylamino)pyridin 2 yl) phenyl)cyclohexyl)acetic acid :Formule(I) and their use in the treatment or prevention of a condition or a disorder associated with DGATl activity in animals particularly humans.

No. of Pages : 47 No. of Claims : 17

(12) PATENT APPLICATION PUBLICATION
(19) INDIA
(22) Date of filing of Application :11/08/2015
(21) Application No.7053/DELNP/2015 A
(43) Publication Date : 25/12/2015

(54) Title of the invention : HIGHLY GALACTOSYLATED ANTI TNF ALPHA ANTIBODIES AND USES THEREOF

(51) International classification :C07K16/04,C07K16/24,C07K16/28
(31) Priority Document No :61/764475
(32) Priority Date :13/02/2013
(33) Name of priority country :U.S.A.
(86) International Application No :PCT/IB2014/000692
Filing Date :13/02/2014
(87) International Publication No :WO 2014/125374
(61) Patent of Addition to Application Number :NA
Filing Date :NA
(62) Divisional to Application Number :NA
Filing Date :NA

(71)**Name of Applicant :**
1)LABORATOIRE FRAN‡AIS DU FRACTIONNEMENT ET DES BIOTECHNOLOGIES
Address of Applicant :3 Avenue Des Tropiques Za Courtaboeuf F 91940 Les Ulis France
(72)**Name of Inventor :**
1)MEADE Harry M.
2)CHEN Li How

(57) Abstract :
In one aspect the disclosure relates to highly galactosylated anti TNF alpha antibodies and compositions thereof. In one aspect the disclosure relates to populations of anti TNF alpha antibodies with a high level of galactosylation and compositions thereof. In one aspect the disclosure relates to methods of production and use of highly galactosylated anti TNF alpha antibodies and populations of anti TNF alpha antibodies with a high level of galactosylation. In some embodiments the anti TNF alpha antibody is adalimumab.

No. of Pages : 108 No. of Claims : 77

(12) PATENT APPLICATION PUBLICATION
(19) INDIA
(22) Date of filing of Application :11/08/2015
(21) Application No.7054/DELNP/2015 A
(43) Publication Date : 25/12/2015

(54) Title of the invention : HIGHLY GALACTOSYLATED ANTI HER2 ANTIBODIES AND USES THEREOF

(51) International classification :C07K16/32
(31) Priority Document No :61/764488
(32) Priority Date :13/02/2013
(33) Name of priority country :U.S.A.
(86) International Application No :PCT/IB2014/000711
Filing Date :13/02/2014
(87) International Publication No :WO 2014/125377
(61) Patent of Addition to Application Number :NA
Filing Date :NA
(62) Divisional to Application Number :NA
Filing Date :NA

(71)**Name of Applicant :**
1)LABORATOIRE FRANCAIS DU FRACTIONNEMENT ET DES BIOTECHNOLOGIES
Address of Applicant :3 Avenue des Tropiques ZA Courtaboeuf F 91940 Les Ulis France
(72)**Name of Inventor :**
1)MEADE Harry M.
2)CHEN Li How

(57) Abstract :
In one aspect the disclosure relates to highly galactosylated anti HER2 antibodies and compositions thereof. In one aspect the disclosure relates to populations of anti HER2 antibodies with a high level of galactosylation and compositions thereof. In one aspect the disclosure relates to methods of production and use of highly galactosylated anti HER2 antibodies and populations of anti HER2 antibodies with a high level of galactosylation. In some embodiments the anti HER 2 antibody is trastuzumab.

No. of Pages : 90 No. of Claims : 48

(12) PATENT APPLICATION PUBLICATION
(19) INDIA
(22) Date of filing of Application :11/08/2015
(21) Application No.7055/DELNP/2015 A
(43) Publication Date : 25/12/2015

(54) Title of the invention : PROPYLENE COPOLYMER WITH HIGH IMPACT PROPERTIES

(51) International classification :C08F210/06
(31) Priority Document No :13161132.9
(32) Priority Date :26/03/2013
(33) Name of priority country :EPO
(86) International Application No :PCT/EP2014/055795
Filing Date :24/03/2014
(87) International Publication No :WO 2014/154610
(61) Patent of Addition to Application Number :NA
Filing Date :NA
(62) Divisional to Application Number :NA
Filing Date :NA

(71)**Name of Applicant :**
1)BOREALIS AG
Address of Applicant :IZD Tower Wagramer Strae 17 19 A 1220 Vienna Austria
(72)**Name of Inventor :**
1)BORAGNO Luca
2)RESCONI Luigi
3)LILJA Johanna
4)GAHLEITNER Markus

(57) Abstract :
Monophasic propylene copolymer with high stiffness and impact resistance.

No. of Pages : 37 No. of Claims : 16

(12) PATENT APPLICATION PUBLICATION
(21) Application No.7060/DELNP/2015 A
(19) INDIA
(22) Date of filing of Application :11/08/2015
(43) Publication Date : 25/12/2015

(54) Title of the invention : BLOOD PRESSURE MEASURING CUFF AND METHOD FOR MOUNTING SAME

(51) International classification :A61B5/022
(31) Priority Document No :2013042843
(32) Priority Date :05/03/2013
(33) Name of priority country :Japan
(86) International Application No :PCT/JP2014/055488
Filing Date :04/03/2014
(87) International Publication No :WO 2014/136782
(61) Patent of Addition to Application Number :NA
Filing Date :NA
(62) Divisional to Application Number :NA
Filing Date :NA

(71)**Name of Applicant :**
1)OMRON HEALTHCARE CO. LTD.
Address of Applicant :53 Kunotsubo Terado cho Muko shi Kyoto 6170002 Japan
(72)**Name of Inventor :**
1)ITO Shinichi
2)ASHIDA Tameo
3)HARADA Masaki

(57) Abstract :
The present invention relates to a blood pressure measuring cuff which is wrapped around a portion where blood pressure is to be measured the cuff being wrapped in one direction along the circumferential direction of the portion. The blood pressure measuring cuff is provided with a band like body (11) which is formed by enveloping a fluid bag (12) with: an inner fabric (5) which is adapted to be in contact with the portion where blood pressure is to be measured; and an outer fabric (4) which faces the inner fabric. The blood pressure measuring cuff is also provided with: a ring (6) which is mounted to the inner peripheral end (11e) side region of the outer fabric (4) through a ring mounting member (7); and a surface fastener (3) which is provided to the outer peripheral end (11f) side region of the inner fabric (5). The ring (6) has a temporary retention structure (60). During the mounting of the cuff the temporary retention structure (60) permits a region continuous with the outer peripheral end (11f) of the band like body (11) to be pulled out by arm force through the ring (6) in the direction in which the region moves away from the portion where blood pressure is to be measured and prevents the region continuing to the outer peripheral end (11f) of the band like body (11) the region having been pulled out by the arm force from being pulled back through the ring (6) by the elastic force of the portion where blood pressure is to be measured.

No. of Pages : 57 No. of Claims : 11

(12) PATENT APPLICATION PUBLICATION
(21) Application No.7061/DELNP/2015 A
(19) INDIA
(22) Date of filing of Application :11/08/2015
(43) Publication Date : 25/12/2015

(54) Title of the invention : BLOOD PRESSURE MEASUREMENT CUFF AND PRODUCTION METHOD FOR BLOOD PRESSURE MEASUREMENT CUFF

(51) International classification :A61B5/022
(31) Priority Document No :2013045788
(32) Priority Date :07/03/2013
(33) Name of priority country :Japan
(86) International Application No :PCT/JP2014/055567
Filing Date :05/03/2014
(87) International Publication No :WO 2014/136818
(61) Patent of Addition to Application Number :NA
Filing Date :NA
(62) Divisional to Application Number :NA
Filing Date :NA

(71)**Name of Applicant :**
1)OMRON HEALTHCARE CO. LTD.
Address of Applicant :53 Kunotsubo Terado cho Muko shi Kyoto 6170002 Japan
(72)**Name of Inventor :**
1)TANIGUCHI Minoru
2)YUASA Tomonori
3)HARADA Masaki
4)ASHIDA Tameo
5)UESAKA Chisato
6)TSUNODA Wataru

(57) Abstract :
A cuff (100) for blood pressure measurement attached so as to encircle a measurement site (B) and characterized by having: a flexible curler (109) bent such that in the natural state the curler (109) runs along the measurement site (B); an airbag (111) that surrounds the inside and the outside of the curler (109) and contains the curler (109) therewithin; an inner fabric (105) attached to the outer surface of the airbag (111) on the measurement site side (B); and outer fabric (101A 101B) attached to the outside surface of the airbag (111) on the opposite side to the measurement site (B).

No. of Pages : 98 No. of Claims : 16

(12) PATENT APPLICATION PUBLICATION
(19) INDIA
(22) Date of filing of Application :11/08/2015
(21) Application No.7062/DELNP/2015 A
(43) Publication Date : 25/12/2015

(54) Title of the invention : VEHICLE DRIVE DEVICE

(51) International classification :B60L15/20,B60K6/442,B60K6/445
(31) Priority Document No :NA
(32) Priority Date :NA
(33) Name of priority country :NA
(86) International Application No :PCT/JP2013/054552
Filing Date :22/02/2013
(87) International Publication No :WO 2014/128925
(61) Patent of Addition to Application Number :NA
Filing Date :NA
(62) Divisional to Application Number :NA
Filing Date :NA

(71)**Name of Applicant :**
1)TOYOTA JIDOSHA KABUSHIKI KAISHA
Address of Applicant :1 Toyota cho Toyota shi Aichi 4718571 Japan
(72)**Name of Inventor :**
1)IWASE Yuji
2)SUZUKI Yosuke
3)KITABATAKE Hirotatsu
4)OSHIUMI Yasuhiro
5)KAWAI Takashi

(57) Abstract :
The present invention is provided with a first rotating machine and a second rotating machine wherein the sum torque of a torque command value (Tt1) of the first rotating machine and a torque command value (Tt2) of the second rotating machine is set larger than a required torque (Tr) for a vehicle when transitioning from a first travel mode in which one of the first rotating machine and the second rotating machine is used as the power source to a second travel mode in which the first rotating machine and the second rotating machine are used as the power source. The torque command value when transitioning from the first travel mode to the second travel mode for the rotating machine used as the power source in the first travel mode may be set larger than the torque command value prior to starting said mode transition.

No. of Pages : 58 No. of Claims : 10

(12) PATENT APPLICATION PUBLICATION
(19) INDIA
(22) Date of filing of Application :11/08/2015
(21) Application No.7063/DELNP/2015 A
(43) Publication Date : 25/12/2015

(54) Title of the invention : DRIVE ARRANGEMENT FOR AN ENGINE ANCILLARY SUCH AS A SUPERCHARGER

(51) International classification :F16H15/38,F02B39/04,F16H61/664
(31) Priority Document No :1302544.0
(32) Priority Date :13/02/2013
(33) Name of priority country :U.K.
(86) International Application No :PCT/EP2014/052859
Filing Date :13/02/2014
(87) International Publication No :WO 2014/125047
(61) Patent of Addition to Application Number :NA
Filing Date :NA
(62) Divisional to Application Number :NA
Filing Date :NA

(71)**Name of Applicant :**
1)TOROTRAK (DEVELOPMENT) LTD
Address of Applicant :1 Aston Way Leyland Lancashire PR26 7UX U.K.
(72)**Name of Inventor :**
1)SHAWE James
2)FULLER John

(57) Abstract :
A supercharging arrangement for an internal combustion engine is disclosed. The supercharging arrangement comprises a supercharger having a rotational drive input and a transmission having a rotational drive input to receive drive from an internal combustion engine and a rotational drive output connected to the input of the supercharger. The transmission includes a variator operatively connected between the input and the output of the transmission which variator has an output that is driven at an operating ratio from an input. There is a control system that operates to cause an engine to deliver an amount of torque that is indicated by the state of an input to the control system. The control system is further operative to set the operating ratio of the variator.

No. of Pages : 53 No. of Claims : 32

(12) PATENT APPLICATION PUBLICATION
(21) Application No.5125/DELNP/2015 A
(19) INDIA
(22) Date of filing of Application :12/06/2015
(43) Publication Date : 25/12/2015

(54) Title of the invention : DISPOSABLE DIAPER

(51) International classification :A61F13/15,A61F13/494
(31) Priority Document No :2012259110
(32) Priority Date :27/11/2012
(33) Name of priority country :Japan
(86) International Application No :PCT/JP2013/081857
Filing Date :27/11/2013
(87) International Publication No :WO 2014/084232
(61) Patent of Addition to Application Number :NA
Filing Date :NA
(62) Divisional to Application Number :NA
Filing Date :NA

(71)**Name of Applicant :**
1)UNICHARM CORPORATION
Address of Applicant :182, Shimobun, Kinsei- cho ,Shikokuchuo- shi, Ehime 7990111 Japan
(72)**Name of Inventor :**
1)SAKAGUCHI ,Satoru

(57) Abstract :
A disposable diaper (10) has elastic leg sections (75), which expand and contract in a product longitudinal direction , disposed further to the inside in a product width direction than a pair of leg opening sections. The area between a rear leg opening section (35R) and a straight line that passes through the center in the product width direction parallel to the product longitudinal direction, is larger than the area between a front leg opening section (35F) and the straight line , which extends in the product longitudinal direction through the center in the product width direction. Elastic buttock sections (77) , which straddle a crotch region and a front waist region and expand and contract in the product longitudinal direction ,are disposed further to the outside in the product width direction than the elastic leg sections (75). The front end sections of the elastic buttock sections are disposed further to the rear than the center of the leg opening sections in the product longitudinal direction.

No. of Pages : 27 No. of Claims : 7

(12) PATENT APPLICATION PUBLICATION
(19) INDIA
(22) Date of filing of Application :12/06/2015

(21) Application No.5126/DELNP/2015 A
(43) Publication Date : 25/12/2015

(54) Title of the invention : TECHNIQUE FOR EXPLICIT PATH CONTROL

(51) International classification	:H04L12/723,H04L12/721,H04L12/725
(31) Priority Document No	:61/752164
(32) Priority Date	:14/01/2013
(33) Name of priority country	:U.S.A.
(86) International Application No	:PCT/EP2014/050576
Filing Date	:14/01/2014
(87) International Publication No	:WO 2014/108554
(61) Patent of Addition to Application Number	:NA
Filing Date	:NA
(62) Divisional to Application Number	:NA
Filing Date	:NA

(71)**Name of Applicant :**
1)TELEFONAKTIEBOLAGET L M ERICSSON (PUBL)
Address of Applicant :SE -164 83 Stockholm Sweden
(72)**Name of Inventor :**
1)FARKAS ,J¡nos
2)ALLAN, David Ian
3)SALTSIDIS, Panagiotis

(57) Abstract :
A technique for explicit path control for traffic forwarding in a network comprising multiple nodes is described. A device embodiment comprises a path computation element that is configured to receive ,from an edge node ,control protocol data units of a control protocol. The path computation element is further configured to determine an explicit path from information contained in the received control protocol data units and to instruct the edge nodes to perform an action to have the explicit path installed in the network.

No. of Pages : 41 No. of Claims : 28

(12) PATENT APPLICATION PUBLICATION
(21) Application No.7070/DELNP/2015 A
(19) INDIA
(22) Date of filing of Application :12/08/2015
(43) Publication Date : 25/12/2015

(54) Title of the invention : PHARMACEUTICAL COMPOSITIONS CONTAINING DEXKETOPROFEN AND TRAMADOL

(51) International classification :A61K31/135,A61K31/192
(31) Priority Document No :MI2013A000210
(32) Priority Date :14/02/2013
(33) Name of priority country :Italy
(86) International Application No :PCT/EP2014/052342
Filing Date :06/02/2014
(87) International Publication No :WO 2014/124862
(61) Patent of Addition to Application Number :NA
Filing Date :NA
(62) Divisional to Application Number :NA
Filing Date :NA

(71)**Name of Applicant :**
1)LABORATORIOS MENARINI SA
Address of Applicant :Alfonso XII 587 E 08918 Badalona Spain
(72)**Name of Inventor :**
1)SCHMITZ Reinhard
2)KOHL Tobias

(57) Abstract :
A pharmaceutical composition as a solid oral dosage form is described comprising: i) a combination of two pharmacological active principles dexketoprofen salt with an organic or inorganic base and tramadol salt with an organic or inorganic acid wherein: the organic or inorganic base is selected in the group: trometamol trimethylamine dimethylamine ethylamine triethylamine diethylamine L lysine L arginine diethanolamine sodium hydroxide calcium hydroxide the organic or inorganic acid is selected in the group: hydrochloric hydrobromic phosphoric sulfuric methanesulfonic benzenesulfonic toluenesulfonic acetic propionic malic maleic succinic citric L tartaric lactic malonic aspartic glutamic; ii) microcrystalline cellulose as a filler; iii) a binder selected in the group: maize starch pre gelatinised maize starch hypromellose or their mixtures; iv) pharmaceutically acceptable excipients.

No. of Pages : 41 No. of Claims : 20

(12) PATENT APPLICATION PUBLICATION
(19) INDIA
(22) Date of filing of Application :12/08/2015
(21) Application No.7071/DELNP/2015 A
(43) Publication Date : 25/12/2015

(54) Title of the invention : METHODS AND PHARMACEUTICAL COMPOSITION FOR THE TREATMENT AND THE PREVENTION OF CARDIOMYOPATHY DUE TO ENERGY FAILURE

(51) International classification :A61K48/00,C07K14/47
(31) Priority Document No :13/756651
(32) Priority Date :01/02/2013
(33) Name of priority country :U.S.A.
(86) International Application No :PCT/EP2014/051966
Filing Date :31/01/2014
(87) International Publication No :WO 2014/118346
(61) Patent of Addition to Application Number :NA
Filing Date :NA
(62) Divisional to Application Number :NA
Filing Date :NA

(71)**Name of Applicant :**
1)INSERM (INSTITUT NATIONAL DE LA SANT‰ ET DE LA RECHERCHE M‰DICALE)
Address of Applicant :101 rue de Tolbiac F 75013 Paris France
2)CENTRE NATIONAL DE LA RECHERCHE SCIENTIFIQUE (CNRS)
3)UNIVERSIT‰ DE STRASBOURG
4)CORNELL CENTER FOR TECHNOLOGY, ENTERPRISE & COMMERCIALIZATION
5)UNIVERSIT‰ PARIS SUD XI
6)NA
(72)**Name of Inventor :**
1)PUCCIO Hl¨ne Monique
2)AUBOURG Patrick
3)CRYSTAL Ronald G
4)BOUGNERES Pierre

(57) Abstract :
The present invention relates to a method for preventing or treating cardiomyopathy due to energy failure in a subject in need thereof comprising administering to said subject a therapeutically effective amount of a vector which comprises a nucleic acid sequence of a gene that can restore energy failure. More particularly the invention relates to a method for preventing or treating a cardiomyopathy associated with Friedreich ataxia in a subject in need thereof comprising administering to said subject a therapeutically effective amount of a vector which comprises a frataxin (FXN) encoding nucleic acid.

No. of Pages : 50 No. of Claims : 20

(12) PATENT APPLICATION PUBLICATION
(21) Application No.7072/DELNP/2015 A
(19) INDIA
(22) Date of filing of Application :12/08/2015
(43) Publication Date : 25/12/2015

(54) Title of the invention : ABSORBENT ARTICLE

(51) International classification :A61F13/15,A61F13/49
(31) Priority Document No :2013007732
(32) Priority Date :18/01/2013
(33) Name of priority country :Japan
(86) International Application No :PCT/JP2014/050822
Filing Date :17/01/2014
(87) International Publication No :WO 2014/112590
(61) Patent of Addition to Application Number :NA
Filing Date :NA
(62) Divisional to Application Number :NA
Filing Date :NA

(71)**Name of Applicant :**
1)UNICHARM CORPORATION
Address of Applicant :182 Shimobun Kinsei cho Shikokuchuo shi Ehime 7990111 Japan
(72)**Name of Inventor :**
1)GODA Hiroki
2)ISHIKAWA Shinichi
3)KAWAMORI Ryota
4)OCHI Kengo

(57) Abstract :
The present invention addresses the problem of providing an absorbent article in which a bonding part for bonding a liquid permeable layer to an absorbent core has been formed in a low basis weight region of the absorbent core and which has all of sufficient flexural rigidity of the bonding part sufficient bonding strength of the bonding part and sufficient liquid absorbing properties. This problem is solved with an absorbent core (4) which comprises a first region that has a given absorbent material basis weight and second regions (regions 411a 411b) that have a lower absorbent material basis weight than the first region wherein the ratio of the basis weight of a highly absorbing polymer to the basis weight of the absorbent material in the second regions is regulated to 10/100 to 47/100 and compressed parts (5a 5b) are formed inside the second regions.

No. of Pages : 56 No. of Claims : 11

(12) PATENT APPLICATION PUBLICATION
(19) INDIA
(22) Date of filing of Application :12/08/2015
(21) Application No.7073/DELNP/2015 A
(43) Publication Date : 25/12/2015

(54) Title of the invention : SYSTEM FOR PREVENTING OMISSION OF DROPLET IMPACT IN SPOT WELDING MACHINE

(51) International classification	:B23K11/11,B23K11/25,B23K11/36
(31) Priority Document No	:1020130077414
(32) Priority Date	:02/07/2013
(33) Name of priority country	:Republic of Korea
(86) International Application No	:PCT/KR2013/006407
Filing Date	:17/07/2013
(87) International Publication No	:WO 2015/002337
(61) Patent of Addition to Application Number	:NA
Filing Date	:NA
(62) Divisional to Application Number	:NA
Filing Date	:NA

(71)**Name of Applicant :**
1)KIM Sung Kap
Address of Applicant :103 1705 Daelim Apt. 158 Eomgung ro Sasang gu Busan 617 765 Republic of Korea
(72)**Name of Inventor :**
1)KIM Sung Kap

(57) Abstract :
The present invention relates to a system for preventing omission of droplet impact in a spot welding machine and more particularly to a system for preventing omission of droplet impact in a spot welding machine constituted of a lower welding tip and an upper welding tip moving upward and downward on the lower welding tip and applying a voltage for welding an object to be welded that is transferred between the lower welding tip and the upper welding tip. The system comprises: a first photo sensor disposed on one side of the spot welding machine and sensing the state of an object to be welded which is introduced to the spot welding machine; a conductivity sensor electrically connected to the upper welding tip to recognize the conductive state of the object to be welded transferred between the upper welding tip and the lower welding tip when the upper welding tip descends; a second photo sensor provided on the other side of the spot welding machine to sense the state of the object to be welded that is discharged from the spot welding machine to be transferred; and a controller in which counter set values per cycle of the first photo sensor the conduction sensor and the second photo sensor are pre inputted and each of counter output values is inputted through sequential operations of the first photo sensor the conduction sensor and the second photo sensor and which compares the output value and the set value to control the operation of the upper welding tip.

No. of Pages : 13 No. of Claims : 4

(12) PATENT APPLICATION PUBLICATION
(19) INDIA
(22) Date of filing of Application :12/08/2015
(21) Application No.7074/DELNP/2015 A
(43) Publication Date : 25/12/2015

(54) Title of the invention : DRUM BRAKE COMPRISING A WHEEL CYLINDER WITH A REDUCED BEARING SURFACE ON THE PLATE AND WITH A GUIDE ELEMENT INTERPOSED BETWEEN THE CYLINDER AND THE PLATE

(51) International classification :F16D51/24,F16D65/00,F16D65/22
(31) Priority Document No :1352270
(32) Priority Date :14/03/2013
(33) Name of priority country :France
(86) International Application No :PCT/EP2014/052519
Filing Date :10/02/2014
(87) International Publication No :WO 2014/139739
(61) Patent of Addition to Application Number :NA
Filing Date :NA
(62) Divisional to Application Number :NA
Filing Date :NA

(71)**Name of Applicant :**
1)CHASSIS BRAKES INTERNATIONAL B.V.
Address of Applicant :Rapenburgerstraat 179/E NL 1011 VM Amsterdam Netherlands
(72)**Name of Inventor :**
1)DUPAS Christophe
2)PRIN Stphane
3)BESAURY La«titia
4)CORBION Pascal

(57) Abstract :
The invention concerns a drum brake (10) for a motor vehicle that comprises a wheel cylinder (24) of which a fastening face (32) is received against a fastened plate (12) of which a cylindrical bearing surface (36) passes through a bore (38) in the plate (12) and of which a fastening screw (48) is received in a tapped hole (46) of the fastening face (32) characterised in that a portion of the fastening face (32) excluding the tapped hole (46) comprises a recess (50) intended to limit the surface area (51) of the fastening face (32) that bears on the plate (12) and in that a translational guide element (54) is interposed between the bearing surface (36) and the bore (38) in the plate (12).

No. of Pages : 15 No. of Claims : 9

(12) PATENT APPLICATION PUBLICATION
(19) INDIA
(22) Date of filing of Application :12/10/2009
(21) Application No.2109/DEL/2009 A
(43) Publication Date : 25/12/2015

(54) Title of the invention : HIGH PERFORMANCE POLYURETHANE BASED REDUCED SMOKE INHIBITION FOR NITRAMINE EXTRUDED DOUBLE BASE PROPELLANTS AND PREPARATIONS THEREOF.

(51) International classification :C07C
(31) Priority Document No :NA
(32) Priority Date :NA
(33) Name of priority country :NA
(86) International Application No :NA
Filing Date :NA
(87) International Publication No : NA
(61) Patent of Addition to Application Number :NA
Filing Date :NA
(62) Divisional to Application Number :NA
Filing Date :NA

(71)**Name of Applicant :**
1)Director General Defence Research & Development Organisation
Address of Applicant :The Director General Defence Research & Development Orgn. Ministry of Defence Govt. of India DRDO Bhavan Rajaji Marg DHQ P.O. New Delhi :- 110011 India Delhi India
(72)**Name of Inventor :**
1)KAKI PURNA CHANDRA RAO
2)RAJA VATSA SINGH
3)MAYANA SUBBAN MATHAN
4)ALAPATI SUBHANANDA RAO

(57) Abstract :
According to the present invention the inhibition formulation according to the present invention consists of Poly tetra hydro furan - 1000 (PTHF 1000) as a resin, 4, 4dicyclohexylmethanedi-isocyanate (HIMDIa)s curative, 1,2,6 Hexane triol (HT) as crosslinker I, 4-Butane diol (nBD) as chain extender, Melamine as filler and Ferric acetyl acetonate (FeAA) is used as curing catalyst. The present invention also provides for a process to the manufacture thereof which comprises the following; the resin, crosslinker, chain extender and filler are mixed under stirring to which is added the curing catalyst. The mixture is then subjected to deaeration under vacuum. A primer coat is prepared using 1,2,6 -hexane triol and hexamethylene diisocyanate in presence of a catalyst dibutyl tin dilaurate. The nitramine propellant is first coated with the primer followed by the inhibition formulation after which the inhibition grain is cured and machined to the required dimensions.

No. of Pages : 9 No. of Claims : 12

(12) PATENT APPLICATION PUBLICATION
(19) INDIA
(22) Date of filing of Application :31/07/2014
(21) Application No.6460/DELNP/2014 A
(43) Publication Date : 25/12/2015

(54) Title of the invention : SPRING UNIT AND SLIDE MECHANISM

(51) International classification :F16F3/02,F16F1/16,F16F1/18
(31) Priority Document No :2012018743
(32) Priority Date :31/01/2012
(33) Name of priority country :Japan
(86) International Application No :PCT/JP2013/051504
Filing Date :24/01/2013
(87) International Publication No :WO 2013/115070
(61) Patent of Addition to Application Number :NA
Filing Date :NA
(62) Divisional to Application Number :NA
Filing Date :NA

(71)**Name of Applicant :**
1)MITSUBISHI STEEL MFG. CO. LTD.
Address of Applicant :2 22 Harumi 3 chome Chuo ku Tokyo 1048550 Japan
(72)**Name of Inventor :**
1)MITSUI Yasuhiro
2)HIROKANE Toru

(57) Abstract :
A spring unit comprising: a resin spring which is made from resin is a solid beam structure and has a curved section which is located between a pair of end sections; and a metal spring which is made from metal wire and has a curved section which is located between a pair of end sections. Therein: the end sections of the resin spring and the end sections of the metal spring are fixed together; when in a fixed state the resin spring and the metal spring are positioned on the same plane; an engagement section where the resin spring and the metal spring are engaged is formed in at least one point between the curved sections and the end sections; and the resin spring and the metal spring are estranged from one another at the portions other than the end sections and the engagement section.

No. of Pages : 29 No. of Claims : 5

(12) PATENT APPLICATION PUBLICATION
(19) INDIA
(22) Date of filing of Application :31/07/2014
(21) Application No.6461/DELNP/2014 A
(43) Publication Date : 25/12/2015

(54) Title of the invention : HEATING DEVICE FOR VALVE TO PREVENT INTERNAL ACCUMULATION OF CONDENSATE

(51) International classification :F02B47/02,F01B29/10
(31) Priority Document No :13/362692
(32) Priority Date :31/01/2012
(33) Name of priority country :U.S.A.
(86) International Application No :PCT/US2013/022555
Filing Date :22/01/2013
(87) International Publication No :WO 2013/116042
(61) Patent of Addition to Application Number :NA
Filing Date :NA
(62) Divisional to Application Number :NA
Filing Date :NA

(71)**Name of Applicant :**
1)CONTROL COMPONENTS INC.
Address of Applicant :22591 Avenida Empressa Rancho Santa Margarita California 92688 U.S.A.
(72)**Name of Inventor :**
1)KRIZ Davor
2)ZIEGER Tobias
3)BAUMANN Peter
4)MURATI Muhamed

(57) Abstract :
In accordance with the present invention there is provided a valve assembly wherein a heating modality such as an induction heater is cooperatively engaged to a prescribed location on a valve housing or body of a valve to effectively maintain the temperature of the valve above the saturation temperature of the related system pressure. Maintaining this temperature differential effectively avoids the accumulation of condensate within the interior of the valve body and/or on other internal structural features thereof.

No. of Pages : 17 No. of Claims : 15

(12) PATENT APPLICATION PUBLICATION
(19) INDIA
(22) Date of filing of Application :12/08/2015
(21) Application No.7081/DELNP/2015 A
(43) Publication Date : 25/12/2015

(54) Title of the invention : A CELL MODULE

(51) International classification :H01L31/0465,H01L31/0443
(31) Priority Document No :2013900490
(32) Priority Date :15/02/2013
(33) Name of priority country :Australia
(86) International Application No :PCT/AU2014/000125
Filing Date :14/02/2014
(87) International Publication No :WO 2014/124495
(61) Patent of Addition to Application Number :NA
Filing Date :NA
(62) Divisional to Application Number :NA
Filing Date :NA

(71)**Name of Applicant :**
1)RAYGEN RESOURCES PTY LTD
Address of Applicant :1330 Malvern Road Malvern Victoria 3144 Australia
(72)**Name of Inventor :**
1)LASICH John Beavis

(57) Abstract :
A photovoltaic cell assembly suitable for use in a dense array concentrated photovoltaic cell module includes a plurality of photovoltaic cells (7) mounted on a substrate and a by pass diode (53) associated with each cell to allow the cell to be by passed in the electrical circuit in the event that the cell fails or has low illumination. The diodes are positioned in the shadows of the cells. The diodes provide direct pathways for heat and electricity from the cells to the substrate.

No. of Pages : 41 No. of Claims : 34

(12) PATENT APPLICATION PUBLICATION
(21) Application No.7082/DELNP/2015 A
(19) INDIA
(22) Date of filing of Application :12/08/2015
(43) Publication Date : 25/12/2015

(54) Title of the invention : DUNNAGE SYSTEM WITH COILER AUTOMATED TAPING AND EJECTING APPARATUS AND METHOD

(51) International classification :B65H19/29,B65B51/06,B65B19/30
(31) Priority Document No :61/763626
(32) Priority Date :12/02/2013
(33) Name of priority country :U.S.A.
(86) International Application No :PCT/US2014/016132
Filing Date :12/02/2014
(87) International Publication No :WO 2014/127061
(61) Patent of Addition to Application Number :NA
Filing Date :NA
(62) Divisional to Application Number :NA
Filing Date :NA

(71)**Name of Applicant :**
1)RANPAK CORP.
Address of Applicant :7990 Auburn Road Concord Township Ohio 44077 U.S.A.
(72)**Name of Inventor :**
1)WINKENS Pedro E.
2)VELDT Ad H.

(57) Abstract :
A dunnage conversion system includes a machine for converting a stock material (14) into a strip of relatively lower density dunnage a coiling mechanism (20) for winding the strip into a coil a taping mechanism (22) for automatically securing a trailing end of the strip to the coil and a coil ejecting mechanism (24) for automatically removing the coil from the coiling mechanism. The taping mechanism includes a guide surface (70) between an outlet of the machine and the coiling mechanism to guide the strip to the coiling mechanism and to guide tape for engagement with a trailing end of the strip and to secure the trailing end of the strip to the coil. The coil ejecting mechanism includes a lever arm (126) that pivots to push the completed coil off the coiling mechanism.

No. of Pages : 23 No. of Claims : 17

(12) PATENT APPLICATION PUBLICATION
(19) INDIA
(22) Date of filing of Application :31/07/2014
(21) Application No.2175/DEL/2014 A
(43) Publication Date : 25/12/2015

(54) Title of the invention : METHOD AND APPARATUS FOR WEIGHING PHARMACEUTICAL PRODUCT CAPSULES

(51) International classification :G01G23/37
(31) Priority Document No :BO2013A000430
(32) Priority Date :01/08/2013
(33) Name of priority country :Italy
(86) International Application No :NA
Filing Date :NA
(87) International Publication No : NA
(61) Patent of Addition to Application Number :NA
Filing Date :NA
(62) Divisional to Application Number :NA
Filing Date :NA

(71)**Name of Applicant :**
1)MG 2 S.r.l.
Address of Applicant :Via del Savena, 18 Localita Pian di Macina, PIANORO, Italy Italy
(72)**Name of Inventor :**
1)Mr. Ernesto GAMBERINI

(57) Abstract :
A method and apparatus for weighing pharmaceutical product capsules (2), whereby a capsule (2) containing a pharmaceutical product (5) is fed into a pocket (11, 13) 5 to allow a measuring device (20) to determine the weight of the pharmaceutical product (5) and of a first portion (30) of the capsule (2) containing the pharmaceutical product (5); the pocket (11, 13), and therefore the capsule (2), then being inverted to move the pharmaceutical product (5) out of the first portion (30) and into a second portion (31) of the capsule (2), to allow the measuring device (20) to determine the weight of the first portion (30) only of the capsule (2). Main drawing . Figure 3

No. of Pages : 21 No. of Claims : 14

(12) PATENT APPLICATION PUBLICATION
(21) Application No.2177/DEL/2014 A
(19) INDIA
(22) Date of filing of Application :31/07/2014
(43) Publication Date : 25/12/2015

(54) Title of the invention : COILING TEMPERATURE CONTROLLER AND CONTROL METHOD THEREOF

(51) International classification :B21B37/76
(31) Priority Document No :2013-186870
(32) Priority Date :10/09/2013
(33) Name of priority country :Japan
(86) International Application No :NA
Filing Date :NA
(87) International Publication No : NA
(61) Patent of Addition to Application Number :NA
Filing Date :NA
(62) Divisional to Application Number :NA
Filing Date :NA

(71)**Name of Applicant :**
1)HITACHI, LTD.
Address of Applicant :6-6, Marunouchi 1-chome, Chiyoda-ku, Tokyo, Japan Japan
(72)**Name of Inventor :**
1)KAYAMA Masahiro
2)HAYASHI Gosuke
3)KURIBAYASHI Ken

(57) Abstract :
A coiling temperature controller controls a coiling temperature and an intermediate temperature with high accuracy while observing intermediate temperature holding time. The coiling temperature controller includes preset control means (1 lo), and water cooling prohibition header calculation means (121) for calculating respective header patterns of upstream and downstream cooling facilities sandwiching an intermediate thermometer (171), and identifying a header near an intermediate thermometer suppressing opening operation, to perform such preset control that intermediate air cooling time is within a target range. The controller further includes dynamic control means (1701) to minimize an effect of disturbance on the intermediate temperature and the coiling temperature during cooling, includes intermediate air cooling time calculation means (1704) to change water cooling prohibition header and strip speed when the target intermediate air cooling time is not observed, thereby performing control of observing target intermediate air cooling time in a wide length direction.

No. of Pages : 43 No. of Claims : 6

(12) PATENT APPLICATION PUBLICATION
(21) Application No.7090/DELNP/2015 A
(19) INDIA
(22) Date of filing of Application :12/08/2015
(43) Publication Date : 25/12/2015

(54) Title of the invention : RECEIVING DEVICE WITH COIL OF ELECTRIC LINE FOR RECEIVING A MAGNETIC FIELD AND FOR PRODUCING ELECTRIC ENERGY BY MAGNETIC INDUCTION AND WITH MAGNETIZABLE MATERIAL

(51) International classification :H01F38/14,H01F27/36
(31) Priority Document No :1306401.9
(32) Priority Date :09/04/2013
(33) Name of priority country :U.K.
(86) International Application No :PCT/EP2014/057094
Filing Date :08/04/2014
(87) International Publication No :WO 2014/166969
(61) Patent of Addition to Application Number :NA
Filing Date :NA
(62) Divisional to Application Number :NA
Filing Date :NA

(71)**Name of Applicant :**
1)BOMBARDIER TRANSPORTATION GMBH
Address of Applicant :Schneberger Ufer 1 10785 Berlin Germany
(72)**Name of Inventor :**
1)ANDERS Dominik
2)WECHSLER Simon
3)CZAINSKI Robert
4)GARCIA Federico

(57) Abstract :
The invention relates to a receiving device (1) for receiving a magnetic field and for producing electric energy by magnetic induction wherein the receiving device (1) comprises at least one coil (33 35 37) of at least one electric line (32 34 36) and wherein the magnetic field induces an electric voltage in the at least one coil (33 35 37) during operation the receiving device (1) and the at least one coil (33 35 37) are adapted to receive the magnetic field from a receiving side of the receiving device (1) the receiving device (1) comprises a field shaping arrangement (61) comprising magnetizable material adapted to shape magnetic field lines of the magnetic field the field shaping arrangement (61) is placed behind the at least one coil (33 35 37) if viewed from the receiving side of the receiving device (1) a depth to be measured in the direction from the receiving side of the receiving device (1) to the side of the receiving device (1) opposite to the receiving side of the field shaping arrangement (61) varies. The invention also relates to a method of manufacturing a receiving device and an arrangement comprising the receiving device.

No. of Pages : 34 No. of Claims : 12

(12) PATENT APPLICATION PUBLICATION
(19) INDIA
(22) Date of filing of Application :12/08/2015
(21) Application No.7091/DELNP/2015 A
(43) Publication Date : 25/12/2015

(54) Title of the invention : SYSTEM FOR ACQUIRING PRESSURE DATA

(51) International classification :F02D41/30
(31) Priority Document No :13/763514
(32) Priority Date :08/02/2013
(33) Name of priority country :U.S.A.
(86) International Application No :PCT/US2014/015196
Filing Date :07/02/2014
(87) International Publication No :WO 2014/124192
(61) Patent of Addition to Application Number :NA
Filing Date :NA
(62) Divisional to Application Number :NA
Filing Date :NA

(71)**Name of Applicant :**
1)CUMMINS INC.
Address of Applicant :500 Jackson Street Columbus IN 47201 U.S.A.
(72)**Name of Inventor :**
1)CAREY David M.
2)MOONJELLY Paul V.

(57) Abstract :
A system and method for measuring fuel pressure decreases in a fuel accumulator caused by a fuel injector of an internal combustion engine is provided. The system includes the ability to stop a fuel flow to a fuel accumulator of the engine. Pressure signals are transmitted to a control system of the engine until the fuel pressure in the fuel accumulator drops by a predetermined amount at which time fuel flow is re enabled. The pressure signals are then analyzed to determine the amount or quantity of fuel delivered by each fuel injector. The system and method maintain engine and emissions performance by limiting the amount of fuel pressure decrease in the fuel accumulator.

No. of Pages : 32 No. of Claims : 20

(12) PATENT APPLICATION PUBLICATION
(21) Application No.6469/DELNP/2014 A
(19) INDIA
(22) Date of filing of Application :31/07/2014
(43) Publication Date : 25/12/2015

(54) Title of the invention : METHOD FOR PREVENTING AN ACCIDENT OR FOR REDUCING THE EFFECTS OF THE ACCIDENT FOR A RIDER

(51) International classification :B62J27/00
(31) Priority Document No :10 2012 203 647.4
(32) Priority Date :08/03/2012
(33) Name of priority country :Germany
(86) International Application No :PCT/EP2013/050775
Filing Date :17/01/2013
(87) International Publication No :WO 2013/131670
(61) Patent of Addition to Application Number :NA
Filing Date :NA
(62) Divisional to Application Number :NA
Filing Date :NA

(71)**Name of Applicant :**
1)ROBERT BOSCH GMBH
Address of Applicant :Postfach 30 02 20 70442 Stuttgart Germany
(72)**Name of Inventor :**
1)LICH Thomas
2)GEORGI Andreas

(57) Abstract :
The invention relates to a method for preventing an accident or for reducing the effects of the accident for a person riding a vehicle in particular a two wheeler or three wheeler. According to the invention in a first method step (S1) information is acquired by means of a first accident prevention system and/or a first system mitigating the effects of the accident. In a second method step (S2) the information is transmitted to a second accident prevention system and/or to a second system mitigating the effects of the accident. In a third method step (S3) the second accident prevention system and/or the second system mitigating the effects of the accident is preconditioned on the basis of the information. The first accident prevention system and the second accident prevention system are different from each other. The first accident prevention system and the second accident prevention system are different from each other.

No. of Pages : 18 No. of Claims : 9

(12) PATENT APPLICATION PUBLICATION
(19) INDIA
(22) Date of filing of Application :12/08/2015
(21) Application No.7085/DELNP/2015 A
(43) Publication Date : 25/12/2015

(54) Title of the invention : PROCESS TO MANUFACTURE 2 CHLORO 1 1 1 2 TETRAFLUOROPROPANE (HCFC 244BB)

(51) International classification :C07C17/04,C07C17/38,C07C19/12
(31) Priority Document No :61/790206
(32) Priority Date :15/03/2013
(33) Name of priority country :U.S.A.
(86) International Application No :PCT/US2014/025325
Filing Date :13/03/2014
(87) International Publication No :WO 2014/151270
(61) Patent of Addition to Application Number :NA
Filing Date :NA
(62) Divisional to Application Number :NA
Filing Date :NA

(71)**Name of Applicant :**
1)HONEYWELL INTERNATIONAL INC.
Address of Applicant :101 Columbia Road Morristown New Jersey 07962 U.S.A.
(72)**Name of Inventor :**
1)KOPKALLI Haluk
2)MERKEL Daniel C.
3)ROOF Ron Joseph

(57) Abstract :
The invention relates to a process to produce HCFC 244bb from HCFO 1233xf wherein in one embodiment one or more co feed species having a normal boiling point of between about 80°C to about 0°C such as HFC 245cb is added to the reaction at a pressure of at least about 100 psig; and in another embodiment it is added to maintain a mole ratio of HFC 245cb to HCFO 1233xf of between about 0.005:1 to about 1:1. The HFC 245cb may be added as recycled by product of the reaction and/or added as fresh feed. The HFC 245cb provides elevated pressures to the reaction thereby facilitating reactor operation mixing and HCFC 244bb product removal. Other co feed species are also disclosed.

No. of Pages : 27 No. of Claims : 30

(12) PATENT APPLICATION PUBLICATION
(19) INDIA
(22) Date of filing of Application :12/08/2015
(21) Application No.7086/DELNP/2015 A
(43) Publication Date : 25/12/2015

(54) Title of the invention : STAGED FLUORINATION PROCESS AND REACTOR SYSTEM

(51) International classification :C07C17/38,C07C19/10,C07C17/07
(31) Priority Document No :61/779625
(32) Priority Date :13/03/2013
(33) Name of priority country :U.S.A.
(86) International Application No :PCT/US2014/024358
Filing Date :12/03/2014
(87) International Publication No :WO 2014/165094
(61) Patent of Addition to Application Number :NA
Filing Date :NA
(62) Divisional to Application Number :NA
Filing Date :NA

(71)**Name of Applicant :**
1)HONEYWELL INTERNATIONAL INC.
Address of Applicant :101 Columbia Road Morristown New Jersey 07962 U.S.A.
(72)**Name of Inventor :**
1)CHIU Yuon
2)KOPKALLI Haluk
3)SMITH Robert A.
4)MERKEL Daniel C.

(57) Abstract :
The invention relates to a process to produce 244bb from 1233xf in multiple reaction zones whereby the 1233xf starting material is at least 95% converted to 244bb and by product such as 245cb forms in amounts less than about 2%.

No. of Pages : 15 No. of Claims : 17

(12) PATENT APPLICATION PUBLICATION
(19) INDIA
(22) Date of filing of Application :12/08/2015
(21) Application No.7087/DELNP/2015 A
(43) Publication Date : 25/12/2015

(54) Title of the invention : COUPLED ENZYME BASED METHOD FOR ELECTRONIC MONITORING OF BIOLOGICAL INDICATOR

(51) International classification :G01N33/52,C12Q1/22
(31) Priority Document No :13/832158
(32) Priority Date :15/03/2013
(33) Name of priority country :U.S.A.
(86) International Application No :PCT/US2014/017907
Filing Date :24/02/2014
(87) International Publication No :WO 2014/149382
(61) Patent of Addition to Application Number :NA
Filing Date :NA
(62) Divisional to Application Number :NA
Filing Date :NA

(71)**Name of Applicant :**
1)AMERICAN STERILIZER COMPANY
Address of Applicant :5960 Heisley Road Mentor Ohio 44060 U.S.A.
(72)**Name of Inventor :**
1)FRANCISKOVICH Phillip P.
2)CREGGER Tricia A.

(57) Abstract :
A sterilization indicator system and method of using the system to determine efficacy of a sterilization process. The system includes a vial having a first compartment containing spores of one or more species of microorganism; a second compartment containing a growth medium with a disaccharide an oligosaccharide or a polysaccharide in which the vial is free of monosaccharide; an enzyme capable of acting upon the monosaccharide to yield reaction products and electron transfer disposed on two or more electrodes adapted to carry an electrical signal resulting from the electron transfer the pair of electrodes positioned to contact the combined contents of the first compartment and the second compartment during incubation; and an apparatus linked or linkable to the electrodes and adapted to detect and measure the electrical signal resulting from electron transfer when the enzyme acts upon the mono saccharide.

No. of Pages : 35 No. of Claims : 10

(12) PATENT APPLICATION PUBLICATION
(19) INDIA
(22) Date of filing of Application :12/08/2015
(21) Application No.7088/DELNP/2015 A
(43) Publication Date : 25/12/2015

(54) Title of the invention : PROCESS FOR PRODUCING 2 3 3 3 TETRAFLUOROPROPENE

(51) International classification :C07C17/07,C07C17/25,C07C19/10
(31) Priority Document No :61/792769
(32) Priority Date :15/03/2013
(33) Name of priority country :U.S.A.
(86) International Application No :PCT/US2014/025733
Filing Date :13/03/2014
(87) International Publication No :WO 2014/151441
(61) Patent of Addition to Application Number :NA
Filing Date :NA
(62) Divisional to Application Number :NA
Filing Date :NA

(71)**Name of Applicant :**
1)HONEYWELL INTERNATIONAL INC.
Address of Applicant :101 Columbia Road Morristown New Jersey 07962 U.S.A.
(72)**Name of Inventor :**
1)WANG Haiyou
2)MERKEL Daniel C.
3)TUNG Hsueh Sung
4)BEKTESEVIC Selma

(57) Abstract :
The invention relates to a process to prepare 2 chloro 3 3 3 trifluoropropene (HCO 1233xf) or 2 chloro 1 1 12 tetrafluoropropane (HCFC 244bb) using dichloro trifluoropropanes and/or trichloro difluoropropanes and to prepare 2 chloro 3 3 3 trifluoropropene (HCO 1233xf) using various 242 and 243 isomers.

No. of Pages : 20 No. of Claims : 18

(12) PATENT APPLICATION PUBLICATION
(19) INDIA
(22) Date of filing of Application :31/07/2014
(21) Application No.6449/DELNP/2014 A
(43) Publication Date : 25/12/2015

(54) Title of the invention : PROBIOTIC DERIVED NON VIABLE MATERIAL FOR INFECTION PREVENTION AND TREATMENT

(51) International classification :A23L1/30,A61K35/74,C12R1/225
(31) Priority Document No :12161083.6
(32) Priority Date :23/03/2012
(33) Name of priority country :EPO
(86) International Application No :PCT/US2013/032757
Filing Date :18/03/2013
(87) International Publication No :WO 2013/142403
(61) Patent of Addition to Application Number :NA
Filing Date :NA
(62) Divisional to Application Number :NA
Filing Date :NA

(71)**Name of Applicant :**
1)MJN U.S. HOLDINGS LLC
Address of Applicant :2701 Patriot Boulevard 4th Floor Glenview IL 60026 U.S.A.
(72)**Name of Inventor :**
1)VAN TOL Eric A.F.
2)GROSS Gabriele
3)BRAAKSMA Machtelt
4)OVERKAMP Karin M.
5)POELS Eduard K.

(57) Abstract :
A COMPOSITION COMPRISING A CULTURE SUPERNATANT FROM A LATE EXPONENTIAL GROWTH PHASE OF A BATCH CULTIVATION PROCESS FOR A PROBIOTIC SUCH AS LGG FOR USE IN THE TREATMENT OR PREVENTION OF INFECTION BY A PATHOGEN SUCH AS C. SAKAZAKII.

No. of Pages : 29 No. of Claims : 10

(12) PATENT APPLICATION PUBLICATION
(19) INDIA
(22) Date of filing of Application :31/07/2014
(21) Application No.6450/DELNP/2014 A
(43) Publication Date : 25/12/2015

(54) Title of the invention : THERMAL SURFACE TREATMENT FOR REUSE OF WAFERS AFTER EPITAXIAL LIFT OFF

(51) International classification :H01L31/18
(31) Priority Document No :61/595916
(32) Priority Date :07/02/2012
(33) Name of priority country :U.S.A.
(86) International Application No :PCT/US2013/025020
Filing Date :07/02/2013
(87) International Publication No :WO 2013/119728
(61) Patent of Addition to Application Number :NA
Filing Date :NA
(62) Divisional to Application Number :NA
Filing Date :NA

(71)**Name of Applicant :**
1)THE REGENTS OF THE UNIVERSITY OF MICHIGAN
Address of Applicant :Office of Technology Transfer 1600 Huron Parkway 2nd Floor Ann Arbor MI 48109 U.S.A.
(72)**Name of Inventor :**
1)LEE Kyusang
2)ZIMMERMAN Jeramy
3)FORREST Stephen R.

(57) Abstract :
There is disclosed a method of preserving the integrity of a growth substrate in a epitaxial lift off method the method comprising providing a structure comprising a growth substrate one or more protective layers a sacrificial layer and at least one epilayer wherein the sacrificial layer and the one or more protective layers are positioned between the growth substrate and the at least one epilayer; releasing the at least one epilayer by etching the sacrificial layer with an etchant; and heat treating the growth substrate and/or at least one of the protective layers.

No. of Pages : 34 No. of Claims : 20

(12) PATENT APPLICATION PUBLICATION
(19) INDIA
(22) Date of filing of Application :31/07/2014
(21) Application No.6451/DELNP/2014 A
(43) Publication Date : 25/12/2015

(54) Title of the invention : PHARMACEUTICAL COMPOSITION COMPRISING EMPAGLIFLOZIN AND ANTIOBESITY DRUG

(51) International classification :A61K31/70,A61K31/135,A61K31/365
(31) Priority Document No :12160377.3
(32) Priority Date :20/03/2012
(33) Name of priority country :EPO
(86) International Application No :PCT/EP2013/055671
Filing Date :19/03/2013
(87) International Publication No :WO 2013/139777
(61) Patent of Addition to Application Number :NA
Filing Date :NA
(62) Divisional to Application Number :NA
Filing Date :NA

(71)**Name of Applicant :**
1)BOEHRINGER INGELHEIM INTERNATIONAL GMBH
Address of Applicant :Binger Strasse 173 55216 Ingelheim Am Rhein Germany
(72)**Name of Inventor :**
1)MAYOUX Eric Williams
2)GREMPLER Rolf
3)KLEIN Thomas

(57) Abstract :
The invention relates to the treatment of metabolic disorders in an overweight or obese patient characterized in that empagliflozin and one or more antiobesity drugs are administered to the patient.

No. of Pages : 44 No. of Claims : 13

(12) PATENT APPLICATION PUBLICATION
(21) Application No.6452/DELNP/2014 A
(19) INDIA
(22) Date of filing of Application :31/07/2014
(43) Publication Date : 25/12/2015

(54) Title of the invention : METHOD FOR IMPROVING SOLUBILITY OF ALKALINE PROTEASE

(51) International classification :C12N9/52,C12N9/54
(31) Priority Document No :2012089482
(32) Priority Date :10/04/2012
(33) Name of priority country :Japan
(86) International Application No :PCT/JP2013/061141
Filing Date :09/04/2013
(87) International Publication No :WO 2013/154201
(61) Patent of Addition to Application Number :NA
Filing Date :NA
(62) Divisional to Application Number :NA
Filing Date :NA

(71)**Name of Applicant :**
1)KAO CORPORATION
Address of Applicant :14 10 Nihonbashi Kayabacho 1 chome Chuo ku Tokyo 1038210 Japan
(72)**Name of Inventor :**
1)TOHATA Masatoshi
2)NISHIMURA Yumi
3)WADA Yasunao
4)SAEKI Katsuhisa
5)OKUDA Mitsuyoshi

(57) Abstract :
Providing an alkaline protease exhibiting an improved solubility in a liquid detergent. A mutant alkaline protease consisting of the amino acid sequence represented by SEQ ID No: 2 or an amino acid sequence having 80% or more sequence identity therewith in which at least one amino acid residue selected from the group consisting of the amino acid residues at predetermined positions of the amino acid sequence represented by SEQ ID No: 2 or corresponding positions thereto are substituted.

No. of Pages : 146 No. of Claims : 20

(12) PATENT APPLICATION PUBLICATION
(19) INDIA
(22) Date of filing of Application :31/07/2014
(21) Application No.6453/DELNP/2014 A
(43) Publication Date : 25/12/2015

(54) Title of the invention : A GLASS TO METAL JOINT FOR A SOLAR RECEIVER

(51) International classification :C03C27/04,F24J2/07,F24J2/46
(31) Priority Document No :12425025.9
(32) Priority Date :09/02/2012
(33) Name of priority country :EPO
(86) International Application No :PCT/EP2013/051141
Filing Date :22/01/2013
(87) International Publication No :WO 2013/117424
(61) Patent of Addition to Application Number :NA
Filing Date :NA
(62) Divisional to Application Number :NA
Filing Date :NA

(71)**Name of Applicant :**
1)ARCHIMEDE SOLAR ENERGY S.R.L.
Address of Applicant :Localit Cimacolle 464 I 06056 Massa Martana (PG) Italy
(72)**Name of Inventor :**
1)CHIARAPPA Thomas
2)RAGGI Claudio

(57) Abstract :
The present invention provides a glass to metal sealing device (10) of a solar receiver and a method for producing it the device (10) comprising a metal collar (11) and a glass cylinder (12) to be sealed together in which the glass cylinder (12) is made out of a borosilicate glass having a thermal expansion coefficient in the range of [3.1 3.5] ·10 °C in the temperature range of [50 450]°C; the metal collar (11) is made of an austenitic alloy having a thermal expansion coefficient in the range of [3.5 6.0] ·10 °C in the temperature range of [50·450]°C; the end portion of the metal collar (11) is beveled so as to increase its mechanical flexibility; and the end portion of the metal collar (11) is processed via a thermal treatment in order to establish a bond between the metal and the glass surfaces.

No. of Pages : 22 No. of Claims : 12

(12) PATENT APPLICATION PUBLICATION
(19) INDIA
(22) Date of filing of Application :12/08/2015
(21) Application No.7095/DELNP/2015 A
(43) Publication Date : 25/12/2015

(54) Title of the invention : BUILDING CONTROL SYSTEM WITH DISTRIBUTED CONTROL •

(51) International classification :G05B15/02
(31) Priority Document No :PCT/US2013/025168
(32) Priority Date :07/02/2013
(33) Name of priority country :PCT
(86) International Application No :PCT/US2013/025168
Filing Date :07/02/2013
(87) International Publication No : NA
(61) Patent of Addition to Application Number :NA
Filing Date :NA
(62) Divisional to Application Number :6977/DELNP/2015
Filed on :07/08/2015

(71)**Name of Applicant :**
1)HONEYWELL INTERNATIONAL, INC.
Address of Applicant :101 Columbia Road, Morristown, New Jersey 07962, USA, U.S.A.
(72)**Name of Inventor :**
1)KARTHICK DASU RAJAN
2)RAMAN SUBRAMANIAM
3)CHANNABASAPPA GUNARI
4)MOHIT JAIN
5)BALAJI SUNDARAVADIVELU
6)RANA BHATTACHARYA
7)TRIVEDI Ishit
8)ANAND Anurag
9)SHIVASHANKAR Ganesh
10)MALVE Sharath Babu
11)THANIKACHALAM Guhapriyan
12)GUDI Balakrishna G.
13)MAHASENAN Arun Vijayakumari
14)VALLIGANNU Appar
15)KRISHNASWAMY Janaki
16)RATH Manaswini

(57) Abstract :
A building control system that includes a central coordinator and one or more discrete air conditioner controllers configured to communicate with one or more discrete air conditioner units. The discrete air conditioner controller a include a Wireless I/O block for receiving signals in a first signal format from the central coordinator and For transmilling signals to the one more discrete air conditioner units in a second signal format. In some instances, the discrete air conditioner controller may be configured to wirelessly transmit a signal to at least one discrete air conditioner unit in response to receiving a signal from the central coordinator. This configuration may provide a measure of distributed control of the building control syste1m in a cost effective and efficient manner.

No. of Pages : 74 No. of Claims : 20

(12) PATENT APPLICATION PUBLICATION
(21) Application No.1627/DEL/2014 A
(19) INDIA
(22) Date of filing of Application :17/06/2014
(43) Publication Date : 25/12/2015

(54) Title of the invention : A RAPID, SENSITIVE, VISUAL AND USER-FRIENDLY LOOP MEDIATED ISOTHERMAL AMPLIFICATION (LAMP) ASSAY FOR DETECTION OF EHRLICHIA CANIS IN CANINE BLOOD SAMPLES.

(51) International classification :C12Q1/68
(31) Priority Document No :NA
(32) Priority Date :NA
(33) Name of priority country :NA
(86) International Application No :NA
Filing Date :NA
(87) International Publication No : NA
(61) Patent of Addition to Application Number :NA
Filing Date :NA
(62) Divisional to Application Number :NA
Filing Date :NA

(71)**Name of Applicant :**
1)CENTRAL MILITARY VETERINARY LABORATORY (CMVL)
Address of Applicant :CENTRAL MILITARY VETERINARY LABORATORY (CMVL), SARDHANA ROAD, MEERUT CANTT, MEERUT (UTTAR PRADESH), INDIA-250001 Uttar Pradesh India
(72)**Name of Inventor :**
1)MITESH MITTAL
2)SOUMENDU CHAKRAVARTI
3)CHANDRA PAL CHURAMANI

(57) Abstract :
The present invention describes about a rapid, sensitive, specific and user friendly visual SYBR Green-1 Loop Mediated Isothermal Amplification (LAMP) assay for detection of E.canis in blood samples of dogs. The E.canis LAMP assay was optimized to amplify the target E.canis DNA by incubation with Bst-DNA polymerase enzyme with a set of specially in-house constructed six primers, based on the 16S rRNA gene of E.canis, at 63 °C for 45 min. E.canis-LAMP products were detected by visual inspection using SYBR Green-I stain and had a ladder-like appearance by gel electrophoresis analysis. Negative results obtained with DNA from other tested common blood borne canine pathogens. The analytical 9 U JUH MM . . B sensitivity of the E.canis-LAMP assay was 1 fg of E.canis DNA. The developed assay was validated with 350 clinical canine blood samples. The developed assay could successfully detect 36 clinical samples which is eight more than nested PCR could detect. The novel assay thus could be successfully become the method of choice of detecting E.canis infection in field conditions with minimum infrastructure requirements.

No. of Pages : 15 No. of Claims : 4

(12) PATENT APPLICATION PUBLICATION
(21) Application No.2170/DEL/2014 A
(19) INDIA
(22) Date of filing of Application :31/07/2014
(43) Publication Date : 25/12/2015

(54) Title of the invention : ELECTROMAGNETICALLY ACTUATED SWITCHGEAR

(51) International classification :H02K7/06
(31) Priority Document No :2013-160103
(32) Priority Date :01/08/2013
(33) Name of priority country :Japan
(86) International Application No :NA
Filing Date :NA
(87) International Publication No : NA
(61) Patent of Addition to Application Number :NA
Filing Date :NA
(62) Divisional to Application Number :NA
Filing Date :NA

(71)**Name of Applicant :**
1)Hitachi, Ltd.
Address of Applicant :6-6, Marunouchi 1-chome, Chiyoda-ku, Tokyo 100-8280, Japan Japan
(72)**Name of Inventor :**
1)MIZUARAI Masahiro
2)YABU Masato
3)TONOSAKI Hironori
4)IITSUKA Shinsuke
5)SUZUKI Keisuke

(57) Abstract :
To provide electromagnetically actuated switchgear with an embedded pole fixed to a case with bolts through an intermediate fixing plate, in which the embedded pole can be removed easily and the fixing reliability is increased. An electromagnetically actuated switchgear includes an operatingmechanismwith an electromagnet and a va.cu.um circuit breaker having an embedded pole integrally cast with insulator, to which driving power derived fromthe electromagnetic force generated by the electromagnet is transmitted through a link mechanism including a driving rod, lever, and insulating rod. The embedded pole is fixed to a case with fixing bolts through an intermediate fixing plate. Bolt fixing holes are made in the intermediate fixing plate and bolt fixing parts are provided in a way to cover the bottom periphery of the embedded pole, and holes similar to the bolt fixing holes are made in the bolt fixing parts. The fixing bolts are passed through the bolt fixing holes of the intermediate fixing plate and penetrated through the holes of the bolt fixing parts

No. of Pages : 39 No. of Claims : 5

(12) PATENT APPLICATION PUBLICATION
(21) Application No.7432/DELNP/2012 A
(19) INDIA
(22) Date of filing of Application :24/08/2012
(43) Publication Date : 25/12/2015

(54) Title of the invention : CONTROL OF PARTICLE FLOW IN AN APERTURE •

(51) International classification :C07C
(31) Priority Document No :1001311.8
(32) Priority Date :27/01/2010
(33) Name of priority country :U.K.
(86) International Application No :PCT/EP2011/051087
Filing Date :26/01/2011
(87) International Publication No :WO/2011/092218
(61) Patent of Addition to Application Number :NA
Filing Date :NA
(62) Divisional to Application Number :NA
Filing Date :NA

(71)**Name of Applicant :**
1)IZON SCIENCE LIMITED
Address of Applicant :175 Roydvale Avenue Burnside Christchurch 8053 New Zealand New Zealand
(72)**Name of Inventor :**
1)VAN DER VOORN Johannes Adrianus

(57) Abstract :
The flow of particles (18) in an aperture (10) between two reservoirs (14) and (15) is controlled by suspending the particles (18) in a fluid (17) within the aperture (10), applying a potential difference across the aperture (10) so as to tend to electrophoretically transport the particles (18) between a region of higher potential field and a region of lower potential in the fluid (17), applying a pressure differential across the aperture (10) so as to tend to transfer the fluid (17) with the particles (18) therein though the aperture (10) from a high-pressure reservoir (14) to a low-pressure reservoir (15), and adjusting the potential difference and/or the pressure differential across the aperture (10) in order to achieve precise control over the translation of the particles (18) within the aperture (10). This permits precise control of velocity and displacement, and the measured delivery of particles in solution through an aperture from one reservoir to another by means of careful command over electrical potential and pressure differential over the aperture.

No. of Pages : 33 No. of Claims : 29

(12) PATENT APPLICATION PUBLICATION
(19) INDIA
(22) Date of filing of Application :12/08/2015
(21) Application No.7075/DELNP/2015 A
(43) Publication Date : 25/12/2015

(54) Title of the invention : USE OF ALPHA 7 NICOTINIC ACETYLCHOLINE RECEPTOR AGONISTS

(51) International classification	:A61K31/501,A61K31/506,A61K31/55
(31) Priority Document No	:61/752772
(32) Priority Date	:15/01/2013
(33) Name of priority country	:U.S.A.
(86) International Application No	:PCT/IB2014/058225
Filing Date	:13/01/2014
(87) International Publication No	:WO 2014/111838
(61) Patent of Addition to Application Number	:NA
Filing Date	:NA
(62) Divisional to Application Number	:NA
Filing Date	:NA

(71)**Name of Applicant :**
1)NOVARTIS AG
Address of Applicant :Lichtstrasse 35 CH 4056 Basel Switzerland
(72)**Name of Inventor :**
1)FENDT Markus
2)FEUERBACH Dominik
3)FINNEMA Sjoerd Johannes
4)HALLDIN Christer
5)JOHNS Donald
6)LOPEZ LOPEZ Cristina
7)MCALLISTER Kevin Hall
8)SOVAGO Judit
9)WEISS Markus

(57) Abstract :
The invention concerns the use of certain alpha 7 nicotinic acetylcholine receptor agonist for the facilitation of emergence from general anesthesia.

No. of Pages : 48 No. of Claims : 15

(12) PATENT APPLICATION PUBLICATION
(19) INDIA
(22) Date of filing of Application :11/08/2015
(21) Application No.7067/DELNP/2015 A
(43) Publication Date : 25/12/2015

(54) Title of the invention : FLUID EJECTION DEVICE

(51) International classification :B41J2/07,B41J29/38,B41J2/01
(31) Priority Document No :NA
(32) Priority Date :NA
(33) Name of priority country :NA
(86) International Application No :PCT/US2013/025931
Filing Date :13/02/2013
(87) International Publication No :WO 2014/126559
(61) Patent of Addition to Application Number :NA
Filing Date :NA
(62) Divisional to Application Number :NA
Filing Date :NA

(71)**Name of Applicant :**
1)HEWLETT PACKARD DEVELOPMENT COMPANY L.P.
Address of Applicant :11445 Compaq Center Drive W. Houston Texas 77070 U.S.A.
(72)**Name of Inventor :**
1)FRIESEN Ed
2)RIVAS Rio
3)RONK Kelly

(57) Abstract :
A method of forming a substrate for a fluid ejection device includes forming an opening in the substrate from a second side toward a first side and further forming the opening in the substrate to the first side including increasing the opening to the first side and increasing the opening at the second side and forming the opening with substantially parallel sidewalls intermediate the first side and the second side and converging sidewalls to the first side.

No. of Pages : 34 No. of Claims : 15

(12) PATENT APPLICATION PUBLICATION
(19) INDIA
(22) Date of filing of Application :12/08/2015
(21) Application No.7068/DELNP/2015 A
(43) Publication Date : 25/12/2015

(54) Title of the invention : VARIABLE HUMIDITY DIRECTIONAL VAPOUR BARRIER

(51) International classification :B32B27/08,E04D12/00,E04B1/62
(31) Priority Document No :13153018.0
(32) Priority Date :29/01/2013
(33) Name of priority country :EPO
(86) International Application No :PCT/EP2014/051732
Filing Date :29/01/2014
(87) International Publication No :WO 2014/118241
(61) Patent of Addition to Application Number :NA
Filing Date :NA
(62) Divisional to Application Number :NA
Filing Date :NA

(71)**Name of Applicant :**
1)SILU VERWALTUNG AG
Address of Applicant :Huobmattstrasse 7 CH 6045 Meggen Switzerland
(72)**Name of Inventor :**
1)SIEBER Marco
2)SIEBER Reto

(57) Abstract :
The present invention relates to a variable humidity directional vapour barrier which comprises at least two layers wherein one layer (layer 1) is humidity variable and the other layer (layer 2) is humidity independent. For layer 1 the quotient for the water vapour diffusion resistance from the s value at 25% mean relative air humidity to the s value at 71.5% mean relative air humidity is greater than 3. For layer 2 the quotient for the water vapour diffusion resistance from the s value at 25% mean relative air humidity to the s value at 71.5% mean relative air humidity is less than 1.5. Furthermore the invention relates to the use of the vapour barrier for sealing buildings and to a system which comprises said vapour barrier. Furthermore the invention relates to the use of a certain film for sealing a space in buildings which is closed by an exterior skin wherein the film comprises defined film sides X and Y or layers 1 and 2 and is arranged in a certain way.

No. of Pages : 50 No. of Claims : 35

(12) PATENT APPLICATION PUBLICATION
(21) Application No.7069/DELNP/2015 A
(19) INDIA
(22) Date of filing of Application :12/08/2015
(43) Publication Date : 25/12/2015

(54) Title of the invention : METHOD FOR MOUNTING MONOLITHS IN A REACTOR FOR CARRYING OUT HETEROGENEOUSLY CATALYZED GAS PHASE REACTIONS

(51) International classification :B01J19/24
(31) Priority Document No :13155163.2
(32) Priority Date :14/02/2013
(33) Name of priority country :EPO
(86) International Application No :PCT/EP2014/052821
Filing Date :13/02/2014
(87) International Publication No :WO 2014/125024
(61) Patent of Addition to Application Number :NA
Filing Date :NA
(62) Divisional to Application Number :NA
Filing Date :NA

(71)**Name of Applicant :**
1)BASF SE
Address of Applicant :67056 Ludwigshafen Germany
(72)**Name of Inventor :**
1)OLBERT Gerhard
2)GAUER Jochen
3)KHLING Arnold
4)TELLAECHE HERRANZ Carlos

(57) Abstract :
The invention relates to a method for mounting monoliths (2) which are each formed from a ceramic block having a plurality of parallel channels through which the reaction gas mixture of the heterogeneously catalyzed gas phase reaction can flow into a reactor (1) for carrying out heterogeneously catalyzed gas phase reactions the monoliths (2) being stacked in the reactor interior next to and above one another. The method is characterized in that the monoliths are sealed from each other and with respect to the inner wall of the reactor (1) by means of mats (3) each comprising an expanding mat which prior to mounting in the reactor (1) are enveloped completely by plastic film vacuum conditions being created in the interior enclosed by the plastic film and containing the mat (3). Once the monoliths are mounted in the reactor (1) the vacuum conditions in the interior enclosed by the plastic film and containing the mat (3) are reversed.

No. of Pages : 12 No. of Claims : 12

(12) PATENT APPLICATION PUBLICATION
(19) INDIA
(22) Date of filing of Application :12/08/2015
(21) Application No.7089/DELNP/2015 A
(43) Publication Date : 25/12/2015

(54) Title of the invention : REACTION SYSTEM AND PROCESS TO PRODUCE FLUORINATED ORGANICS

(51) International classification :C07B39/00,C07C7/20,B01J23/26
(31) Priority Document No :61/813393
(32) Priority Date :18/04/2013
(33) Name of priority country :U.S.A.
(86) International Application No :PCT/US2014/034580
Filing Date :18/04/2014
(87) International Publication No :WO 2014/172592
(61) Patent of Addition to Application Number :NA
Filing Date :NA
(62) Divisional to Application Number :NA
Filing Date :NA

(71)**Name of Applicant :**
1)HONEYWELL INTERNATIONAL INC.
Address of Applicant :101 Columbia Road Morristown New Jersey 07962 U.S.A.
(72)**Name of Inventor :**
1)BEKTESEVIK Selma
2)KOPKALLI Haluk
3)WANG Haiyou

(57) Abstract :
The invention relates to the use of a liquid vapor separator such as a de entrainer to remove an unvaporized portion of a feed e.g. 1 1 2 3 tetrachloropropene (1230xa) to a catalytic vapor phase fluorination reaction where e.g. 2 chloro 3 3 3 trifluoropropene (1233xf) is produced. The invention extends the life of the catalyst.

No. of Pages : 18 No. of Claims : 25

(12) PATENT APPLICATION PUBLICATION
(19) INDIA
(22) Date of filing of Application :20/06/2014
(21) Application No.1665/DEL/2014 A
(43) Publication Date : 25/12/2015

(54) Title of the invention : VECTORING PROCESS INITIALIZATION

(51) International classification :H04L29/02,
(31) Priority Document No :NA
(32) Priority Date :NA
(33) Name of priority country :NA
(86) International Application No :NA
Filing Date :NA
(87) International Publication No : NA
(61) Patent of Addition to Application Number :NA
Filing Date :NA
(62) Divisional to Application Number :NA
Filing Date :NA

(71)**Name of Applicant :**
1)ALCATEL LUCENT
Address of Applicant :148/152 route de la Reine Boulogne-Billancourt 92100, France
(72)**Name of Inventor :**
1)RAJAPANDIYAN, Karthick
2)TIMMA MOHAN, Sabarinath
3)SRINIVASAN, Raghuraman

(57) Abstract :
Access node (102) for multiplexing signals received over a plurality of network cables is described. The access node (102) comprises a SLVP module (114) coupled to one or more line termination units (104) of the access node (102). The SLVP module (114) is to perform vectoring for the plurality of network cables connected to the one or more line termination units (104) if a VP link exists between the SLVP module (114) and the line termination unit (104). The access node (102) further comprises at least one BLVP module (118). The at least one BLVP module (118) is housed in a corresponding line termination unit (104). The at least one BLVP module (118) is to perform vectoring for one or more network cables connected to the corresponding line termination unit (104) in the absence of VP link between the SLVP module (114) and the corresponding line termination unit (104). To be published with figure 1

No. of Pages : 24 No. of Claims : 11

(12) PATENT APPLICATION PUBLICATION
(19) INDIA
(22) Date of filing of Application :12/08/2015
(21) Application No.7076/DELNP/2015 A
(43) Publication Date : 25/12/2015

(54) Title of the invention : USE OF ALPHA 7 NICOTINIC ACETYLCHOLINE RECEPTOR AGONISTS

(51) International classification	:A61K31/55,A61K31/506,A61K31/4545
(31) Priority Document No	:61/752765
(32) Priority Date	:15/01/2013
(33) Name of priority country	:U.S.A.
(86) International Application No	:PCT/IB2014/058224
Filing Date	:13/01/2014
(87) International Publication No	:WO 2014/111837
(61) Patent of Addition to Application Number	:NA
Filing Date	:NA
(62) Divisional to Application Number	:NA
Filing Date	:NA

(71)**Name of Applicant :**
1)NOVARTIS AG
Address of Applicant :Lichtstrasse 35 CH 4056 Basel Switzerland
(72)**Name of Inventor :**
1)FENDT Markus
2)FEUERBACH Dominik
3)JOHNS Donald
4)LOPEZ LOPEZ Cristina
5)MCALLISTER Kevin Hall
6)SOVAGO Judit
7)WEISS Markus

(57) Abstract :
The invention concerns the use of certain alpha 7 nicotinic acetylcholine receptor agonists for the treatment amelioration prevention or delay of progression of fatigue.

No. of Pages : 38 No. of Claims : 15

(12) PATENT APPLICATION PUBLICATION
(19) INDIA
(22) Date of filing of Application :12/08/2015
(21) Application No.7077/DELNP/2015 A
(43) Publication Date : 25/12/2015

(54) Title of the invention : USE OF ALPHA 7 NICOTINIC RECEPTOR AGONISTS FOR THE TREATMENT OF NARCOLEPSY

(51) International classification :A61K31/439,A61K31/46,A61P25/20
(31) Priority Document No :PCT/IB2013/050368
(32) Priority Date :15/01/2013
(33) Name of priority country :PCT
(86) International Application No :PCT/IB2013/050368
Filing Date :15/01/2013
(87) International Publication No :WO 2014/111751
(61) Patent of Addition to Application Number :NA
Filing Date :NA
(62) Divisional to Application Number :NA
Filing Date :NA

(71)**Name of Applicant :**
1)NOVARTIS AG
Address of Applicant :Lichtstrasse 35 CH 4056 Basel Switzerland
(72)**Name of Inventor :**
1)FENDT Markus
2)FEUERBACH Dominik
3)GOMEZ MANCILLA Baltazar
4)LOPEZ LOPEZ Cristina
5)MCALLISTER Kevin Hall

(57) Abstract :
The invention concerns the use of certain alpha 7 nicotinic acetylcholine receptor agonists for the treatment amelioration prevention or delay of progression of narcolepsy excessive daytime sleepiness nocturnal sleep disruption and/or cataplexy.

No. of Pages : 45 No. of Claims : 18

(12) PATENT APPLICATION PUBLICATION
(21) Application No.7078/DELNP/2015 A
(19) INDIA
(22) Date of filing of Application :12/08/2015
(43) Publication Date : 25/12/2015

(54) Title of the invention : TRICYCLIC NUCLEOSIDES AND OLIGOMERIC COMPOUNDS PREPARED THEREFROM

(51) International classification :C07H19/06,C07H21/00
(31) Priority Document No :13159651.2
(32) Priority Date :15/03/2013
(33) Name of priority country :EPO
(86) International Application No :PCT/EP2014/055211
Filing Date :14/03/2014
(87) International Publication No :WO 2014/140348
(61) Patent of Addition to Application Number :NA
Filing Date :NA
(62) Divisional to Application Number :NA
Filing Date :NA

(71)**Name of Applicant :**
1)UNIVERSIT„T BERN
Address of Applicant :Verwaltungsdirektion Hochschulstrasse 4 CH 3012 Bern Switzerland
(72)**Name of Inventor :**
1)LEUMANN Christian

(57) Abstract :
The present invention provides fluorine substituted tricyclic nucleosides of formula (I) wherein: the substituents are as defined in the claims. The present invention further provides oligomeric compounds prepared therefrom. Incorporation of one or more of the tricyclic nucleosides into an oligomeric compound enhances one or more properties of the oligomeric compound. Such oligomeric compounds can also be included in double stranded compositions.

No. of Pages : 40 No. of Claims : 16

(12) PATENT APPLICATION PUBLICATION
(21) Application No.1646/DEL/2014 A
(19) INDIA
(22) Date of filing of Application :18/06/2014
(43) Publication Date : 25/12/2015

(54) Title of the invention : A TEST STRIP FOR HOLDING REAGENTS TO DETERMINE BLOOD GLUCOSE LEVEL

(51) International classification :C12Q1/54
(31) Priority Document No :NA
(32) Priority Date :NA
(33) Name of priority country :NA
(86) International Application No :NA
Filing Date :NA
(87) International Publication No : NA
(61) Patent of Addition to Application Number :NA
Filing Date :NA
(62) Divisional to Application Number :NA
Filing Date :NA

(71)**Name of Applicant :**
1)INDIAN COUNCIL OF MEDICAL RESEARCH (ICMR)
Address of Applicant :V. RAMALINGASWAMI BHAWAN, Ansari Nagar, New Delhi 110 029, India Delhi India
2)Birla Institute of Technology and Sciences (BITS)
(72)**Name of Inventor :**
1)Suman Kapur

(57) Abstract :
This invention relates to a test strip for holding reagents to determine blood glucose level, said strip composed of: a) a composite membrane for separation of plasma from whole blood. b) a enzyme mix specific to the analyte, said analyte is glucose. c) a substrate which reacts specifically with one of the products of the enzymatic reaction of the analyte with the enzyme mix, d) an enhancer mix of metallic ions, which enhances the color developed due to the enzymatic reaction.

No. of Pages : 17 No. of Claims : 12

(12) PATENT APPLICATION PUBLICATION
(19) INDIA
(22) Date of filing of Application :07/02/2005
(21) Application No.453/DELNP/2005 A
(43) Publication Date : 25/12/2015

(54) Title of the invention : SOFT CLING FEMALE CONDOM

(51) International classification :A61F 6/00
(31) Priority Document No :60/411,771
(32) Priority Date :19/09/2002
(33) Name of priority country :U.S.A.
(86) International Application No :PCT/US2003/029661
Filing Date :19/09/2003
(87) International Publication No :WO 2004/026168 A2
(61) Patent of Addition to Application Number :NA
Filing Date :NA
(62) Divisional to Application Number :NA
Filing Date :NA

(71)**Name of Applicant :**
1)PATH
Address of Applicant :1455 N.W.LEARY WAY, SEATTLE, WA 98107-5136, UNITED STATES OF AMERICA U.S.A.
(72)**Name of Inventor :**
1)LISA TAM
2)GLENN D. AUSTIN
3)YANCY SEAMANS
4)WILLIAM ROBERT VAN LEW JR.

(57) Abstract :
A packaged soft cling female condom (1, l', I), comprising: a pouch (10, lo', 10) of resilient membranous material having an open end, a closed end, an outer surface and an inner surface; and at least one hydrophilic cling element (15, 15', 15) attached to said outer surface of said pouch (10, lo', lo), said at least one cling element (15, 15', 15) being disposed between said open end and said closed end; characterized by; an inserter (20, 20', 20) attached to said pouch (10, lo', 10) for retaining a distal portion (19, 19', 19, 34) of said pouch (10, lo', 10) and facilitating insertion of said female condom (1, l', 1) into a vagina; wherein said inserter (20, 20', 20) is dissolvable in the vaginal environment, s&d distal portion (19) of said pouch (10, lo', 10) is slidably retained in said inserter (20, 20', 207, and each one of said cling elements (15, 15', 15) adapted to cling lightly to walls of a vagina proximate a transition zone between the vagina's introitus and its rugated internal vaginal tissue for anchoring said pouch in or slightly beyond said introitus.

No. of Pages : 17 No. of Claims : 23

(12) PATENT APPLICATION PUBLICATION
(19) INDIA
(22) Date of filing of Application :12/08/2015

(21) Application No.7083/DELNP/2015 A
(43) Publication Date : 25/12/2015

(54) Title of the invention : SELECTIVE LASER SOLIDIFICATION APPARATUS AND METHOD

(51) International classification :B22F3/105,B29C67/00
(31) Priority Document No :1302602.6
(32) Priority Date :14/02/2013
(33) Name of priority country :U.K.
(86) International Application No :PCT/GB2014/050417
Filing Date :13/02/2014
(87) International Publication No :WO 2014/125280
(61) Patent of Addition to Application Number :NA
Filing Date :NA
(62) Divisional to Application Number :NA
Filing Date :NA

(71)**Name of Applicant :**
1)RENISHAW PLC
Address of Applicant :New Mills Wotton under Edge Gloucestershire GL12 8JR U.K.
(72)**Name of Inventor :**
1)DIMTER Marc Frank
2)MAYER Ralph Markus
3)HESS Thomas

(57) Abstract :
Selective laser solidification apparatus (2) is described that comprises a powder bed (6; 200; 300) onto which a powder layer (400; 500) can be deposited and a gas flow unit (30) for passing a flow of gas over the powder bed along a predefined gas flow direction (G). A laser scanning unit (20) is provided for scanning a laser beam (22) over the powder layer (400; 500) to selectively solidify at least part of the powder layer (400;500) to form a required pattern (402; 502). The required pattern (402; 502) is formed from a plurality of stripes or stripe segments (S1 S12) that are formed by advancing the laser beam (22) along the stripe or stripe segment (S1 S12)in a stripe formation direction (L). The stripe formation direction (L) is arranged so that it always at least partially opposes the predefined gas flow direction(G).A corresponding method is also described.

No. of Pages : 37 No. of Claims : 17

(12) PATENT APPLICATION PUBLICATION
(19) INDIA
(22) Date of filing of Application :12/08/2015
(21) Application No.7084/DELNP/2015 A
(43) Publication Date : 25/12/2015

(54) Title of the invention : METHOD AND REAGENT FOR PREPARING A DIAGNOSTIC COMPOSITION

(51) International classification :A61K49/04,A61K9/00,A61K47/02
(31) Priority Document No :61/805556
(32) Priority Date :27/03/2013
(33) Name of priority country :U.S.A.
(86) International Application No :PCT/US2014/021138
Filing Date :06/03/2014
(87) International Publication No :WO 2014/158965
(61) Patent of Addition to Application Number :NA
Filing Date :NA
(62) Divisional to Application Number :NA
Filing Date :NA

(71)**Name of Applicant :**
1)GE HEALTHCARE AS
Address of Applicant :P.O. Box 4220 Nydalen Nycoveien 1 2 N 0401 Oslo Norway
(72)**Name of Inventor :**
1)INT VELD Dirk Jan

(57) Abstract :
The present invention provides an aqueous excipient solution suitable for diluting a diagnostic composition comprising a contrast agent. The excipient solution comprises a sodium ion concentration of about 100 140 mM and a calcium ion concentration of about 0.8 1.2 mM. Alternatively the molar ratio between sodium ion concentration and calcium ion concentration is between about 80 and 175. Also provided are methods of making and using the excipient solution as well as a kit comprising the excipient solution.

No. of Pages : 17 No. of Claims : 32

(12) PATENT APPLICATION PUBLICATION
(19) INDIA
(22) Date of filing of Application :12/08/2015
(21) Application No.7092/DELNP/2015 A
(43) Publication Date : 25/12/2015

(54) Title of the invention : OPTICAL LENS MEMBER COMPRISING A SUB SURFACE REFERENCING ELEMENT

(51) International classification	:G02C7/02,G02B3/00,B24B13/005
(31) Priority Document No	:13305239.9
(32) Priority Date	:01/03/2013
(33) Name of priority country	:EPO
(86) International Application No	:PCT/EP2014/053926
Filing Date	:28/02/2014
(87) International Publication No	:WO 2014/131879
(61) Patent of Addition to Application Number	:NA
Filing Date	:NA
(62) Divisional to Application Number	:NA
Filing Date	:NA

(71)**Name of Applicant :**
1)ESSILOR INTERNATIONAL (COMPAGNIE GENERALE DOPTIQUE)
Address of Applicant :147 rue de Paris F 94220 Charenton Le Pont France
(72)**Name of Inventor :**
1)DUBOIS Frdric
2)MAURICE Sbastien

(57) Abstract :
An optical lens member comprising first and second faces connected by an external periphery surface the optical lens member further comprises a reference system identified by at least one sub surface referencing element located between the first and second optical faces wherein the first face comprises a first optical surface having a surface design associated with the reference system.

No. of Pages : 26 No. of Claims : 16

(12) PATENT APPLICATION PUBLICATION
(19) INDIA
(22) Date of filing of Application :12/08/2015
(21) Application No.7093/DELNP/2015 A
(43) Publication Date : 25/12/2015

(54) Title of the invention : AIR DRYER

(51) International classification :B01D53/26,B01D53/74,B01D46/00
(31) Priority Document No :13/778973
(32) Priority Date :27/02/2013
(33) Name of priority country :U.S.A.
(86) International Application No :PCT/US2013/067166
Filing Date :29/10/2013
(87) International Publication No :WO 2014/133596
(61) Patent of Addition to Application Number :NA
Filing Date :NA
(62) Divisional to Application Number :NA
Filing Date :NA

(71)**Name of Applicant :**
1)GRAHAM WHITE MANUFACTURING COMPANY
Address of Applicant :1242 Colorado Street Salem Virginia 24153 U.S.A.
(72)**Name of Inventor :**
1)GINDER William F.

(57) Abstract :
An air dryer includes first and second flow paths. Each flow path includes a check valve that prevents fluid flow into the flow path and an exhaust valve having an open position that permits fluid flow out of the flow path and a shut position that prevents fluid flow out of the flow path. A diverter valve has a first position that provides fluid communication to the first flow path and a second position that provides fluid communication to the second flow path. An interlock operably connected to the diverter valve and the exhaust valves prevents positioning the diverter valve to the first position when the exhaust valve in the first flow path is in the open position and prevents positioning the diverter valve to the second position when the exhaust valve in the second flow path is in the open position.

No. of Pages : 23 No. of Claims : 20

(12) PATENT APPLICATION PUBLICATION
(19) INDIA
(22) Date of filing of Application :12/08/2015
(21) Application No.7094/DELNP/2015 A
(43) Publication Date : 25/12/2015

(54) Title of the invention : SURGICAL IMPLANT

(51) International classification :A61F2/00
(31) Priority Document No :10 2013 004 573.8
(32) Priority Date :11/03/2013
(33) Name of priority country :Germany
(86) International Application No :PCT/EP2014/000466
Filing Date :21/02/2014
(87) International Publication No :WO 2014/139633
(61) Patent of Addition to Application Number :NA
Filing Date :NA
(62) Divisional to Application Number :NA
Filing Date :NA

(71)**Name of Applicant :**
1)JOHNSON & JOHNSON MEDICAL GMBH
Address of Applicant :Robert Koch Strasse 1 22851 Norderstedt Germany
(72)**Name of Inventor :**
1)DEICHMANN Thorsten
2)PRIEWE Jrg

(57) Abstract :
A surgical implant (1) comprises a basic structure (2) having a first face (4) and a resorbable film (6) attached to the first face (4) of the basic structure (2). A plurality of solid protrusions (8) emerges from the film (6) in a direction away from the basic structure (2). The protrusions (8) comprise a shape defined by a respective body and a respective head the body emerging from the film (6) and terminating in the head and the head projecting laterally with respect to the body.

No. of Pages : 38 No. of Claims : 20

(12) PATENT APPLICATION PUBLICATION
(19) INDIA
(22) Date of filing of Application :27/08/2012
(21) Application No.7437/DELNP/2012 A
(43) Publication Date : 25/12/2015

(54) Title of the invention : TRICYCLIC INDOLE DERIVATIVES AS PBR LIGANDS •

(51) International classification :C07C
(31) Priority Document No :PCT/EP2010/053998
(32) Priority Date :26/03/2010
(33) Name of priority country :EPO
(86) International Application No :PCT/EP2011/054744
Filing Date :28/03/2011
(87) International Publication No :WO/2011/117421
(61) Patent of Addition to Application Number :NA
Filing Date :NA
(62) Divisional to Application Number :NA
Filing Date :NA

(71)**Name of Applicant :**
1)GE HEALTHCARE LIMITED
Address of Applicant :Amersham Place Little Chalfont Buckinghamshire HP7 9NA U.K.
(72)**Name of Inventor :**
1)RADHA ACHANATH
2)SRINATH BALAJI
3)STEVEN MICHAEL FAIRWAY
4)DIMITRIOS MANTZILAS
5)UMAMAHESHWAR MOKKAPATI
6)DENNIS O™SHEA
7)JOANNA MARIE PASSMORE
8)BO SHAN
9)WILLIAM JOHN TRIGG
10)HARRY JOHN WADSWORTH
11)AFSAL MOHAMMED KADAVILPPARAMPU MOHAMED

(57) Abstract :
The present invention provides a PET tracer that has improved properties for imaging the peripheral benzodiazepine receptor (PBR) as compared with known such PET tracers. The present invention also provides a precursor compound useful in the preparation of the PET tracer of the invention and methods for the preparation of said precursor compound and said PET tracer. Also provided by the present invention is a radiopharmaceutical composition comprising the PET tracer of the invention. Methods for using the PET tracer and the radiopharmaceutical composition are also provided.

No. of Pages : 65 No. of Claims : 23

(12) PATENT APPLICATION PUBLICATION
(21) Application No.7438/DELNP/2012 A
(19) INDIA
(22) Date of filing of Application :27/08/2012
(43) Publication Date : 25/12/2015

(54) Title of the invention : IDENTIFICATION INFORMATION ALLOCATION DEVICE AND IDENTIFICATION INFORMATION ALLOCATION METHOD •

(51) International classification :H04N
(31) Priority Document No :2010-032660
(32) Priority Date :17/02/2010
(33) Name of priority country :Japan
(86) International Application No :PCT/JP2011/050849
Filing Date :19/01/2011
(87) International Publication No :WO 2011/102172
(61) Patent of Addition to Application Number :NA
Filing Date :NA
(62) Divisional to Application Number :NA
Filing Date :NA

(71)**Name of Applicant :**
1)NTT DOCOMO INC.
Address of Applicant :11-1 Nagatacho 2-chome Chiyoda-ku Tokyo 100-6150 Japan
(72)**Name of Inventor :**
1)YOSHIYASU SHINKE
2)YUUYA YAMAGUCHI
3)HIROO OMORI
4)TOMOHISA OTSUKA

(57) Abstract :
An objective of the present invention is to allocate an ID of a communication area of a base station efficiently and appropriately. The identification information allocation device 1 includes a group generation module 3 that groups the communication areas of the base station, a group ID allocation module 6 that allocates a group ID to grouped groups, and an ID allocation module 9 that allocates the ID to the communication area of the base station on the basis of the group ID.

No. of Pages : 76 No. of Claims : 11

(12) PATENT APPLICATION PUBLICATION
(19) INDIA
(22) Date of filing of Application :27/08/2012
(21) Application No.7440/DELNP/2012 A
(43) Publication Date : 25/12/2015

(54) Title of the invention : MODEM ROUTER UNIT ACCESS NODE AND METHOD OF ENABLING COMMUNICATION WITH A PACKET SWITCHED NETWORK

(51) International classification	:H04L12/28,H04L12/56,H04W40/24
(31) Priority Document No	:NA
(32) Priority Date	:NA
(33) Name of priority country	:NA
(86) International Application No Filing Date	:PCT/EP2010/001782 :22/03/2010
(87) International Publication No	:WO 2011/116783
(61) Patent of Addition to Application Number Filing Date	:NA :NA
(62) Divisional to Application Number Filing Date	:NA :NA

(71)**Name of Applicant :**
1)TELEFONAKTIEBOLAGET LM ERICSSON (PUBL)
Address of Applicant :S 164 83 Stockholm Sweden
(72)**Name of Inventor :**
1)DEN HARTOG Jos

(57) Abstract :
The present invention provides a primary modem router for enabling communication between user equipment and a home network. The primary modem router comprises an access communication unit for enabling a connection with said home network and a wireless communication unit. The primary modem router further comprises a line monitoring unit for monitoring connection quality of the connection with the network. The line monitoring unit provides a connection failure signal upon detection of insufficient connection quality. A processing unit of the primary modem router is arranged for receiving the connection failure signal and for establishing a wireless connection with a further modem router unit upon receipt of this signal. This enables communication with the home network. The invention further provides an access node and method of enabling communication with a network.

No. of Pages : 27 No. of Claims : 15

(12) PATENT APPLICATION PUBLICATION
(21) Application No.7419/DELNP/2012 A
(19) INDIA
(22) Date of filing of Application :24/08/2012
(43) Publication Date : 25/12/2015

(54) Title of the invention : TIME DEPENDENT ACCESS PERMISSIONS

(51) International classification :G06F7/04
(31) Priority Document No :PCT/IL2010/000069
(32) Priority Date :27/01/2010
(33) Name of priority country :Israel
(86) International Application No :PCT/IL2011/000078
Filing Date :23/01/2011
(87) International Publication No :WO 2011/092686
(61) Patent of Addition to Application Number :NA
Filing Date :NA
(62) Divisional to Application Number :NA
Filing Date :NA

(71)**Name of Applicant :**
1)VARONIS SYSTEMS INC.
Address of Applicant :499 7th Avenue 23rd Floor South Tower New York New York 11018 U.S.A.
(72)**Name of Inventor :**
1)FAITELSON Yakov
2)KORKUS Ohad
3)KRETZER KATZIR Ophir
4)BASS David

(57) Abstract :
A network object access permission management system useful with a computer network including at least one server and a multiplicity of clients the system including an access permissions subsystem which governs access permissions of users to network objects in the computer network in real time and a future condition based permissions instruction subsystem providing instructions to the access permission subsystem to grant or revoke access permissions of the users to network objects in real time in response to future fulfillment of conditions which are established by an operator in advance.

No. of Pages : 35 No. of Claims : 20

(12) PATENT APPLICATION PUBLICATION
(21) Application No.7064/DELNP/2015 A
(19) INDIA
(22) Date of filing of Application :11/08/2015
(43) Publication Date : 25/12/2015

(54) Title of the invention : PUMP INCLUDING A SHIELD FOR PROTECTING A PUMP WHEEL AGAINST A COOLANT LEAK ALONG THE HUB OF THE WHEEL

(51) International classification	:F04D29/10,F04D29/20,F04D29/58
(31) Priority Document No	:13 51443
(32) Priority Date	:20/02/2013
(33) Name of priority country	:France
(86) International Application No	:PCT/EP2014/052657
Filing Date	:11/02/2014
(87) International Publication No	:WO 2014/128028
(61) Patent of Addition to Application Number	:NA
Filing Date	:NA
(62) Divisional to Application Number	:NA
Filing Date	:NA

(71)**Name of Applicant :**
1)AREVA NP
Address of Applicant :Tour AREVA 1 Place Jean Millier F 92400 Courbevoie France
(72)**Name of Inventor :**
1)PHILIPPART Olivier

(57) Abstract :
The invention relates to a pump that includes: a chamber (4) for heat transport fluid flow; a pump wheel (10) which is placed entirely in the flow chamber (4) and which comprises a hub (40); a shaft (14) for rotating the pump wheel (10) having an axial end section (12) rigidly connected to the pump wheel (10) and fitted in the hub (40) of the pump wheel (10); a motor for rotating the shaft (14) about the axis thereof; and means for causing a coolant for cooling the drive shaft (14) to flow at a temperature lower than that of the heat transport fluid along the drive shaft (14). Said pump also includes a shield (120) for protecting the pump wheel (10) against a coolant leak along an outer peripheral surface (48) of the hub (40) of said pump wheel (10) said protective shield (120) being attached to the pump wheel (10).

No. of Pages : 16 No. of Claims : 15

(12) PATENT APPLICATION PUBLICATION
(19) INDIA
(22) Date of filing of Application :11/08/2015
(21) Application No.7066/DELNP/2015 A
(43) Publication Date : 25/12/2015

(54) Title of the invention : DEEP TISSUE FLOWMETRY USING DIFFUSE SPECKLE CONTRAST ANALYSIS

(51) International classification :A61B5/026
(31) Priority Document No :61/755700
(32) Priority Date :23/01/2013
(33) Name of priority country :U.S.A.
(86) International Application No :PCT/US2014/011675
Filing Date :15/01/2014
(87) International Publication No :WO 2014/116483
(61) Patent of Addition to Application Number :NA
Filing Date :NA
(62) Divisional to Application Number :NA
Filing Date :NA

(71)**Name of Applicant :**
1)NANYANG TECHNOLOGICAL UNIVERSITY
Address of Applicant :50 Nanyang Avenue Singapore 639798 Singapore
(72)**Name of Inventor :**
1)LEE Kijoon
2)BI Renzhe
3)DONG Jing

(57) Abstract :
Blood flow rates can be calculated using diffuse speckle contrast analysis in spatial and time domains. In the spatial domain analysis a multi pixel image sensor can be used to detect a spatial distribution of speckles in a sample caused by diffusion of light from a coherent light source that is blurred due to the movement of scatterers within the sample (e.g. red blood cells moving within a tissue sample). Statistical analysis of the spatial distribution can be used to calculate blood flow. In the time domain analysis a slow counter can be used to obtain time series fluctuations in light intensity in a sample caused by diffusion of light in the sample that is smoofhened due to the movement of scatterers. Statistical analysis of the time series data can be used to calculate blood flow.

No. of Pages : 26 No. of Claims : 23

(12) PATENT APPLICATION PUBLICATION
(19) INDIA
(22) Date of filing of Application :12/06/2015
(21) Application No.5127/DELNP/2015 A
(43) Publication Date : 25/12/2015

(54) Title of the invention : RADIO ACCESS TECHNOLOGY SELECTION

(51) International classification :H04W48/16
(31) Priority Document No :12197341.6
(32) Priority Date :14/12/2012
(33) Name of priority country :EPO
(86) International Application No :PCT/EP2013/075228
Filing Date :02/12/2013
(87) International Publication No :WO 2014/090616
(61) Patent of Addition to Application Number :NA
Filing Date :NA
(62) Divisional to Application Number :NA
Filing Date :NA

(71)**Name of Applicant :**
1)TELEFONAKTIEBOLAGET L M ERICSSON (publ)
Address of Applicant :SE- 164 83 Stockholm Sweden
(72)**Name of Inventor :**
1)LINDOFF, Bengt
2)NILSSON, Johan
3)WILHELMSSON ,Leif

(57) Abstract :
There is provided association of a radio access technology, RAT , supported by a wireless device ,WD , with a first service. The WD supports at least a first RAT , a second RAT and a third RAT. The second RAT supports a first service and a second service , the first RAT supports the first service but not the second service , and the third RAT supports at least the first service. An indicator that the second service is to be associated with the second RAT is acquired. An indicator that said third RAT is available for use is acquired. Channel measurements for at least one of the second RAT and the third RAT are acquired. The first service is associated with one of the second RAT and the third RAT based on the acquired channel measurements.

No. of Pages : 28 No. of Claims : 21

(12) PATENT APPLICATION PUBLICATION
(21) Application No.5128/DELNP/2015 A
(19) INDIA
(22) Date of filing of Application :12/06/2015
(43) Publication Date : 25/12/2015

(54) Title of the invention : DISPOSABLE DIAPER

(51) International classification :A61F13/49,A61F13/56
(31) Priority Document No :2012259164
(32) Priority Date :27/11/2012
(33) Name of priority country :Japan
(86) International Application No :PCT/JP2013/081859
Filing Date :27/11/2013
(87) International Publication No :WO 2014/084233
(61) Patent of Addition to Application Number :NA
Filing Date :NA
(62) Divisional to Application Number :NA
Filing Date :NA

(71)**Name of Applicant :**
1)UNICHARM CORPORATION
Address of Applicant :182 ,Shimobun, Kinsei -cho, Shikokuchuo- shi, Ehime 7990111 Japan
(72)**Name of Inventor :**
1)SAKAGUCHI ,Satoru
2)YAMANAKA, Yasuhiro
3)SAWA, Kana

(57) Abstract :
In a disposable diaper (10), a fastening tape (90) is constituted by a plurality of non woven fabric sheets (91 , 92). Embossing (60a) is disposed on a back sheet (60), which is disposed on the most non- skin -contact surface side of non -woven fabric sheets (60 , 70) corresponding to joining regions where the fastening tape (90) is joined at both side edges of the disposable diaper (10). Embossing (91a), which has the same shape as or similar shape to the shape of the embossing (60a) disposed on the back sheet (60) , is disposed on the non- woven fabric sheet (91) disposed on the most non -skin- contact surface side of the non -woven fabric sheets (91 , 92) constituting the fastening tape (90).

No. of Pages : 16 No. of Claims : 9

(12) PATENT APPLICATION PUBLICATION
(19) INDIA
(22) Date of filing of Application :12/06/2015
(21) Application No.5129/DELNP/2015 A
(43) Publication Date : 25/12/2015

(54) Title of the invention : CONTROL METHOD FOR INTAGLIO PRINTING AND CONTROL STRIP FOR THAT PURPOSE

(51) International classification :B41F11/02,B41F33/00,B41F9/02
(31) Priority Document No :12198762.2
(32) Priority Date :20/12/2012
(33) Name of priority country :EPO
(86) International Application No :PCT/IB2013/061170
Filing Date :20/12/2013
(87) International Publication No :WO 2014/097227
(61) Patent of Addition to Application Number :NA
Filing Date :NA
(62) Divisional to Application Number :NA
Filing Date :NA

(71)**Name of Applicant :**
1)KBA -NOTASYS SA
Address of Applicant :55 ,Avenue du Grey, PO Box 347, CH-1000 Lausanne 22 Switzerland
(72)**Name of Inventor :**
1)CHASSOT ,Daniel
2)HERITIER ,Raymond
3)VOROS ,Denis

(57) Abstract :
The invention in particular describes a control method for intaglio printing , particularly for printing paper securities, in particular bank notes. This control method includes defining , on an intaglio printing plate (80) ,control strips (150 , 151- 55; 170 , 171 -179) designed so as in particular to make it possible to evaluate the effects of the printing pressure applied during printing of a substrate using the intaglio printing plate (80) and to evaluate the effects of the ink load applied during inking of the intaglio printing plate (8) , the control strips (150 , 151- 55; 170 , 171 -179) being etched in a portion of the intaglio printing plate (80) so as to produce corresponding printed control zones (160 , 161 -165) on the substrate. The method furthermore includes performing measurements in the printed control zones making it possible to assess the printing pressure applied during printing of the substrate as well as the ink load applied during inking of the intaglio printing plate (80).

No. of Pages : 57 No. of Claims : 35

(12) PATENT APPLICATION PUBLICATION
(19) INDIA
(22) Date of filing of Application :12/08/2015
(21) Application No.7105/DELNP/2015 A
(43) Publication Date : 25/12/2015

(54) Title of the invention : NEUTRAL POINT OF A GENERATOR

(51) International classification :H02K19/36,H02K5/12,H02K11/00
(31) Priority Document No :13159963.1
(32) Priority Date :19/03/2013
(33) Name of priority country :EPO
(86) International Application No :PCT/EP2014/053341
Filing Date :20/02/2014
(87) International Publication No :WO 2014/146855
(61) Patent of Addition to Application Number :NA
Filing Date :NA
(62) Divisional to Application Number :NA
Filing Date :NA

(71)**Name of Applicant :**
1)SIEMENS AKTIENGESELLSCHAFT
Address of Applicant :Wittelsbacherplatz 2 80333 M¼nchen Germany
(72)**Name of Inventor :**
1)KOWALSKI Waldemar
2)LEHMANN Christoph

(57) Abstract :
The invention relates to an electrodynamic machine (1) comprising a housing (2) and a rotor (4) as well as a neutral point (5) wherein the neutral point (5) is located inside the housing (2) and the neutral point ends are interconnected by means of shorting bridges (13 15) and the shorting bridges are designed in such a way that the neutral point ends (10 11 12) inside the generator housing (2) can be electrically isolated from each other.

No. of Pages : 17 No. of Claims : 10

(12) PATENT APPLICATION PUBLICATION
(21) Application No.5134/DELNP/2015 A
(19) INDIA
(22) Date of filing of Application :12/06/2015
(43) Publication Date : 25/12/2015

(54) Title of the invention : DISPOSABLE DIAPER

(51) International classification :A61F13/15,A61F13/49
(31) Priority Document No :2012259176
(32) Priority Date :27/11/2012
(33) Name of priority country :Japan
(86) International Application No :PCT/JP2013/081860
Filing Date :27/11/2013
(87) International Publication No :WO 2014/084234
(61) Patent of Addition to Application Number :NA
Filing Date :NA
(62) Divisional to Application Number :NA
Filing Date :NA

(71)**Name of Applicant :**
1)UNICHARM CORPORATION
Address of Applicant :182 ,Shimobun, Kinsei -cho, Shikokuchuo- shi ,Ehime 799-0111 Japan
(72)**Name of Inventor :**
1)SAKAGUCHI ,Satoru

(57) Abstract :
An elastic crotch section (200a) in a disposable diaper (10) is disposed in such a manner as to straddle a center line (O) of the disposable diaper (10) in a product width direction (W), and overlap with a region in which at least an absorbent body (40) is disposed. The elastic crotch section (200a) is provided away from a waist holding section (150) without intersecting the waist holding section (150). A liquid -permeable top sheet (50) is provided closer to a skin contact surface side (S1) of the disposable diaper (10) than the absorbent body (40). A liquid- permeable second sheet (51) , which is bulkier than the top sheet , is provided between the top sheet (50) and the absorbent body (40). The second sheet (51) is disposed in such a manner as to overlap with a region in which the elastic crotch section (200a) is disposed.

No. of Pages : 35 No. of Claims : 8

(12) PATENT APPLICATION PUBLICATION
(21) Application No.7434/DELNP/2012 A
(19) INDIA
(22) Date of filing of Application :24/08/2012
(43) Publication Date : 25/12/2015

(54) Title of the invention : A SEALING SYSTEM FOR SEALING OF DOORS OF TRANSPORT VEHICLES WITH DOOR SPECIFIC SEALS •

(51) International classification :H02J
(31) Priority Document No :10158157.7
(32) Priority Date :29/03/2010
(33) Name of priority country :EPO
(86) International Application No :PCT/EP2011/001288
Filing Date :16/03/2011
(87) International Publication No :WO/2011/120635
(61) Patent of Addition to Application Number :NA
Filing Date :NA
(62) Divisional to Application Number :NA
Filing Date :NA

(71)**Name of Applicant :**
1)DEUTSCHE POST AG
Address of Applicant :Charles-de-Gaulle-Strasse 20 53113 Bonn Germany Germany
(72)**Name of Inventor :**
1)PAAVILAINEN Samuli
2)LEMOLA Jussi

(57) Abstract :
The invention relates to a sealing system (1) for sealing of doors (2) of transport vehicles (7) comprising at least one door (2) with at least one first electrical contact (21) means and a corresponding door frame (3) with at least one second electrical contact means (31), where the first and the second contact means (21, 31) are arranged on the same side of the door (2) and the door frame (3) and are electrically connected to build an open electrical circuit (C1), and a seal (4) to be attached to the closed door (2) and the door frame (3) suitable to close the open electrical circuit (C1) between first and second electrical contact means (21, 31) in order to indicate the closure of the door (2). The invention further relates to a portable logging device (5) for recording the sealing of doors (2) as used by the sealing system (1) and to a method to operate such a sealing system (1).

No. of Pages : 32 No. of Claims : 15

(12) PATENT APPLICATION PUBLICATION
(19) INDIA
(22) Date of filing of Application :18/06/2014

(21) Application No.1643/DEL/2014 A
(43) Publication Date : 25/12/2015

(54) Title of the invention : A DETECTOR SUBSYSTEM OF FIRE DETECTION AND SUPRESSION SYSTEM

(51) International classification :A62C3/06
(31) Priority Document No :NA
(32) Priority Date :NA
(33) Name of priority country :NA
(86) International Application No :NA
Filing Date :NA
(87) International Publication No : NA
(61) Patent of Addition to Application Number :NA
Filing Date :NA
(62) Divisional to Application Number :NA
Filing Date :NA

(71)**Name of Applicant :**
1)DIRECTOR GENERAL, DEFENCE RESEARCH & DEVELOPMENT ORGANISATION
Address of Applicant :Ministry of Defence, Govt of India, Room No. 348, B Wing, DRDO Bhawan, Rajaji Marg, New Delhi 110011, India; Delhi India
(72)**Name of Inventor :**
1)LAL, Banwari
2)KUMAR, Hemant
3)CHAWLA, Anil Kumar
4)RAKHRA, Neeta
5)MISHRA, Bhagwan Jee
6)SHAKYAWAR, Ashok Kumar

(57) Abstract :
The invention relates to a detector subsystem, of a fire detection and suppression system for armoured fighting vehicles, comprising a pyro-electric Sensor (S1) capable of generating an electrical voltage on being exposed to IR radiation having wavelength in the range of 4.0 5.0 micrometer, the voltage being amplified by an amplifier electrically connected to it output, the amplified voltage being supplied to a first comparator (C1) electrically connected to output of the pyro-electric sensor (S1); a photo-diode (S2) capable of generating an electrical voltage on being exposed to IR radiation having wavelength in the range of 0.8 1.0 micrometer, the voltage being supplied to a second comparator (C2) electrically connected to the output of the photo-diode (S2); the first comparator (C1) and second comparator (C2) electrically connected to first input terminal and second input terminal of an AND gate respectively, each of the first comparator (C1) and second comparator(C2) configured to supply an output voltage to the first input terminal and second input terminal of AND gate when the voltage supplied to the each comparator exceeds a predetermined voltage threshold value, the AND gate being configured to provide an output voltage when both C1 and C2 simultaneously provide the output voltage to the respective input terminal; and output of AND gate electrically connected to Controller Area Network (CAN) Bus through a micro controller to initiate fire detection alarm and fire suppression devices.

No. of Pages : 15 No. of Claims : 8

(12) PATENT APPLICATION PUBLICATION
(21) Application No.836/DEL/2015 A
(19) INDIA
(22) Date of filing of Application :25/03/2015
(43) Publication Date : 25/12/2015

(54) Title of the invention : A METHOD OF USING A UNIQUE PACKET IDENTIFIER TO IDENTIFY STRUCTURE OF A PACKET AND AN APPARATUS THEREOF

(51) International classification :H04L29/00
(31) Priority Document No :14/309,633
(32) Priority Date :19/06/2014
(33) Name of priority country :U.S.A.
(86) International Application No :NA
Filing Date :NA
(87) International Publication No : NA
(61) Patent of Addition to Application Number :NA
Filing Date :NA
(62) Divisional to Application Number :NA
Filing Date :NA

(71)**Name of Applicant :**
1)XPliant, Inc.
Address of Applicant :2315 N. First Street, San Jose, CA 95131, U.S.A. U.S.A.
(72)**Name of Inventor :**
1)SINGH, Chirinjeev
2)DANIEL, Tsahi
3)SCHMIDT, Gerald
4)PATEL, Saurin

(57) Abstract :
Embodiments of the apparatus for modifying packet headers relate to a packet generalization scheme that maintains information across protocol layers of packets. The packet generalization scheme uses a protocol table that includes layer information for all possible protocol layer combinations. The protocol layer combinations in the protocol table are manually configured through software. Each protocol layer combination in the protocol table is uniquely identified by a PktID. A rewrite engine of a network device receives the PktID for a packet and uses that unique identifier as key to the protocol table to access information for each protocol layer of the packet that the rewrite engine requires during modification of the packet. The packet generalization scheme eliminates the need for a parser engine of the network device to pass parsed data to the rewrite engine, which is resource intensive.

No. of Pages : 62 No. of Claims : 25

(12) PATENT APPLICATION PUBLICATION
(21) Application No.5110/DELNP/2015 A
(19) INDIA
(22) Date of filing of Application :12/06/2015
(43) Publication Date : 25/12/2015

(54) Title of the invention : IMAGE PROCESSING DEVICE AND METHOD

(51) International classification :H04N19/50
(31) Priority Document No :2012279847
(32) Priority Date :21/12/2012
(33) Name of priority country :Japan
(86) International Application No :PCT/JP2013/082936
Filing Date :09/12/2013
(87) International Publication No :WO 2014/097912
(61) Patent of Addition to Application Number :NA
Filing Date :NA
(62) Divisional to Application Number :NA
Filing Date :NA

(71)**Name of Applicant :**
1)SONY CORPORATION
Address of Applicant :1 7 1 Konan Minato ku Tokyo 1080075 Japan
(72)**Name of Inventor :**
1)TAKAHASHI Yoshitomo
2)NAKAGAMI Ohji

(57) Abstract :
The present disclosures pertain to an image processing device and method that enable an improvement in encoding efficiency in multi-viewpoint encoding. In the case of the present technology (1), the temporal list (RefPicListTemp0[rIdx]) of L0 is generated in the sequence of a short- time- period (pre-) reference image having an index of 0 and 1 , an inter -view reference image having an index of 0- 3 , a short- time- period (post-) reference image having an index of 0 and 1 ,and a long -time- period reference image having an index of 0. In such a case , by means of num_ref_idx_10_active_minus1 being equal to 4, a reference list of L0 is generated in the sequence of a short -time -period (pre-) reference image having an index of 0, and an inter- view reference image having an index of 0 -3. The present disclosures can , for example ,but applied in an image processing device.

No. of Pages : 181 No. of Claims : 20

(12) PATENT APPLICATION PUBLICATION
(21) Application No.2163/DEL/2014 A
(19) INDIA
(22) Date of filing of Application :31/07/2014
(43) Publication Date : 25/12/2015

(54) Title of the invention : SAFETY ANALYSIS OF A COMPLEX SYSTEM USING COMPONENT-ORIENTED FAULT TREES •

(51) International classification :G06F17/50
(31) Priority Document No :14/082,506
(32) Priority Date :18/11/2013
(33) Name of priority country :U.S.A.
(86) International Application No :NA
Filing Date :NA
(87) International Publication No : NA
(61) Patent of Addition to Application Number :NA
Filing Date :NA
(62) Divisional to Application Number :NA
Filing Date :NA

(71)**Name of Applicant :**
1)THE BOEING COMPANY
Address of Applicant :100 North Riverside Plaza, Chicago, IL 60606-2016, USA, U.S.A.
(72)**Name of Inventor :**
1)ANAPATHUR V. RAMESH
2)DAVID W. TWIGG

(57) Abstract :
A safety-analysis system 100 for a complex system such as an aircraft includes a system modeler 104 and model-analysis system 106. The system modeler 104 is configured to receive component fault-based models of respective components of which a system is composed, such as from a library of component fault-based models in storage. The component fault-based models include transfer functions expressed as fault trees 500 each of which describes behavior of a respective component in an event of a failure of the respective component or of an external input 404 to the component. The system modeler 104 is also configured to assemble the component fault-based models into a system fault-based model of the system, with the system fault-based model including a transfer function expressed as an assembly of the fault trees 500 of the component fault-based models. The model-analysis system 106, then, is configured to perform a safety analysis using the system fault-based model.

No. of Pages : 45 No. of Claims : 14

(12) PATENT APPLICATION PUBLICATION
(19) INDIA
(22) Date of filing of Application :11/08/2015
(21) Application No.7059/DELNP/2015 A
(43) Publication Date : 25/12/2015

(54) Title of the invention : METHODS FOR THE SYNTHESIS OF SPHINGOMYELINS AND DIHYDROSPHINGOMYELINS

(51) International classification :C07F9/10
(31) Priority Document No :61/801641
(32) Priority Date :15/03/2013
(33) Name of priority country :U.S.A.
(86) International Application No :PCT/IB2014/000494
Filing Date :14/03/2014
(87) International Publication No :WO 2014/140787
(61) Patent of Addition to Application Number :NA
Filing Date :NA
(62) Divisional to Application Number :NA
Filing Date :NA

(71)**Name of Applicant :**
1)CERENIS THERAPEUTICS HOLDING SA
Address of Applicant :265 rue de la Dcouverte F 31670 Labege France
(72)**Name of Inventor :**
1)ONICIU Daniela Carmen
2)HECKHOFF Stefan
3)OSWALD Benoit
4)REBMANN Peter
5)PEER Andreas
6)GONZALEZ Miguel
7)SAUTER Patrik

(57) Abstract :
The present invention includes methods for the synthesis of sphingomyelins and dihydrosphingomyelins. The present invention also includes methods for the synthesis of sphingosines and dihydrosphingosines. The present invention further includes methods for the synthesis of ceramides and dihydroceramides.

No. of Pages : 126 No. of Claims : 26

(12) PATENT APPLICATION PUBLICATION
(19) INDIA
(22) Date of filing of Application :12/06/2015
(21) Application No.5115/DELNP/2015 A
(43) Publication Date : 25/12/2015

(54) Title of the invention : BINARY FUNGICIDAL AND BACTERICIDAL COMBINATIONS

(51) International classification :A01N43/80,A01N45/02,A01N43/82
(31) Priority Document No :12197766.4
(32) Priority Date :18/12/2012
(33) Name of priority country :EPO
(86) International Application No :PCT/EP2013/076857
Filing Date :17/12/2013
(87) International Publication No :WO 2014/095826
(61) Patent of Addition to Application Number :NA
Filing Date :NA
(62) Divisional to Application Number :NA
Filing Date :NA

(71)**Name of Applicant :**
1)BAYER CROPSCIENCE AG
Address of Applicant :Alfred -Nobel- Str. 50, 40789 Monheim Germany
(72)**Name of Inventor :**
1)DAHMEN ,Peter
2)WACHENDORFF- NEUMANN ,Ulrike

(57) Abstract :
The invention relates to novel active compound combinations , in particular to fungicidal and/or insecticidal and/or bactericidal compositions comprising (A) isotianil and at least one fungicidally active compound (B) selected from the group comprising of (B1) members of the group of host defense inducers selected from tiadinil and probenazole , and comprising of (B2) members of the other fungicides group selected from isopyrazam and propiconazole.

No. of Pages : 63 No. of Claims : 12

(12) PATENT APPLICATION PUBLICATION
(19) INDIA
(22) Date of filing of Application :12/06/2015
(21) Application No.5117/DELNP/2015 A
(43) Publication Date : 25/12/2015

(54) Title of the invention : MAGNETIC CORES AND METHOD FOR PRODUCING SAME

(51) International classification :H01F3/10,H01F27/26,H01F1/34
(31) Priority Document No :10 2012 222 224.3
(32) Priority Date :04/12/2012
(33) Name of priority country :Germany
(86) International Application No :PCT/EP2013/075579
Filing Date :04/12/2013
(87) International Publication No:WO 2014/086886
(61) Patent of Addition to Application Number :NA
Filing Date :NA
(62) Divisional to Application Number :NA
Filing Date :NA

(71)**Name of Applicant :**
1)SUMIDA COMPONENTS & MODULES GMBH
Address of Applicant :Dr. Hans- Vogt- Platz 1, 94130 Obernzell Germany
(72)**Name of Inventor :**
1)BAUMANN, Michael Alfons

(57) Abstract :
The present invention provides magnetic cores and a method for producing same, wherein the magnetic cores have at least two materials with different magnetic properties. The materials are selected from a ferrite material , an oxide ceramic material and a superparamagnetic material and are formed alternately in individual areas along the magnetic core.

No. of Pages : 45 No. of Claims : 21

(12) PATENT APPLICATION PUBLICATION
(21) Application No.1649/DEL/2014 A
(19) INDIA
(22) Date of filing of Application :19/06/2014
(43) Publication Date : 25/12/2015

(54) Title of the invention : MULTI -PHASE ANHYDROUS COMPOSITION COMPRISING AT LEAST ONE OIL, AT LEAST ONE POLYOL AND NON IONIC SURFACTANTS, AND COSMETIC PROCESS THEREOF

(51) International classification :A61K8/72,
(31) Priority Document No :NA
(32) Priority Date :NA
(33) Name of priority country :NA
(86) International Application No :NA
Filing Date :NA
(87) International Publication No : NA
(61) Patent of Addition to Application Number :NA
Filing Date :NA
(62) Divisional to Application Number :NA
Filing Date :NA

(71)**Name of Applicant :**
1)L'OREAL
Address of Applicant :14, Rue Royale-75008 Paris, FRANCE France
(72)**Name of Inventor :**
1)DE BONI Maxime
2)M. TRIPATHI Virenda
3)M, ARGADE Aditi

(57) Abstract :
The present invention relates to an anhydrous composition for treating keratin fibres, in particular human keratin fibres such as the hair, comprising (i) at least one fatty phase (A) comprising at least one oil and (ii) at least one anhydrous non-oil phase (B) comprising at least one polyol, wherein said phases (A) and (B) are visually distinctive from each other. The composition further comprises at least one non ionic surfactant (i) having an HLB higher than 9 and at least one non ionic surfactant (ii) having an HLB less than or equal to 9 in an amount higher than 0.2% by weight relative to the weight of the anhydrous composition. The weight ratio between the non ionic surfactant (i) and the non ionic surfactant (ii) is in the range of 5.5 to 12.5. The invention also concerns a process for treating keratin fibres, in particular human keratin fibres such as the hair, and a use for hair care employing the said composition.

No. of Pages : 31 No. of Claims : 11

(12) PATENT APPLICATION PUBLICATION
(21) Application No.2156/DEL/2012 A
(19) INDIA
(22) Date of filing of Application :12/07/2012
(43) Publication Date : 25/12/2015

(54) Title of the invention : PHARMACEUTICAL COMPOSITIONS OF ARTEMISININ DERIVATIVE AND PROCESS OF PREPARATION THEREOF

(51) International classification :A61K
(31) Priority Document No :NA
(32) Priority Date :NA
(33) Name of priority country :NA
(86) International Application No :NA
Filing Date :NA
(87) International Publication No : NA
(61) Patent of Addition to Application Number :2703/DEL/2011
Filed on :19/09/2011
(62) Divisional to Application Number :NA
Filing Date :NA

(71)**Name of Applicant :**
1)RANBAXY LABORATORIES LIMITED
Address of Applicant :12TH FLOOR, DEVIKA TOWER, 6, NEHRU PLACE, NEW DELHI-110019, INDIA. Delhi India
(72)**Name of Inventor :**
1)HARISH KUMAR MADAN
2)ANNAMDEVARA BALAJI
3)SUMIT MADAN
4)VINOD KUMAR ARORA
5)SANJUKTA BHATTACHARYYA
6)ARJUN ROY

(57) Abstract :
The field of the invention relates to pharmaceutical composition of c/s-adamantane-2-spiro-3,-8-[[[(2-amino-2-methylpropyl)amino]carbonyl]- methyl] -1,2,4-trioxaspiro[4.5]decane, in combination with piperaquine, and processes for their preparation.

No. of Pages : 18 No. of Claims : 8

(12) PATENT APPLICATION PUBLICATION
(21) Application No.2178/DEL/2014 A
(19) INDIA
(22) Date of filing of Application :31/07/2014
(43) Publication Date : 25/12/2015

(54) Title of the invention : ROLLING CONTROL DEVICE, ROLLING CONTROL METHOD AND ROLLING CONTROL PROGRAM

(51) International classification	:B21B 37/00
(31) Priority Document No	:2013-167888
(32) Priority Date	:12/08/2013
(33) Name of priority country	:Japan
(86) International Application No	:NA
Filing Date	:NA
(87) International Publication No	: NA
(61) Patent of Addition to Application Number	:NA
Filing Date	:NA
(62) Divisional to Application Number	:NA
Filing Date	:NA

(71)**Name of Applicant :**
1)HITACHI, LTD.
Address of Applicant :6-6, Marunouchi 1-chome, Chiyoda-ku, Tokyo, Japan Japan
(72)**Name of Inventor :**
1)HATTORI Satoshi

(57) Abstract :
There are provided a rolling control device, rolling control method, and rolling control program capable of effectively suppressing a sheet velocity fluctuation due to a radius fluctuation of a tension reel (2) that winds out a material to be rolled on the inlet side of a rolling mill (1) and a tension reel (3) that winds up the material to be rolled on the outlet side of the rolling mill (1). The rolling control method and rolling control program includes the steps of: obtaining a detection result of a reel rotational position of a tension reel (2, 3) around which the material to be rolled is wound; based on reel radius fluctuation information obtained by associating a reel rotation position of the tension reel (2,3) with a reel radius fluctuation value cowesponding to the rotation position, obtaining a reel radius fluctuation value corresponding to a detection result of the reel rotational position; generating a correction value for correcting a feed velocity command value so that a fluctuation in a feed velocity of the material to be rolled corresponding to the obtained reel radius fluctuation value is suppressed, and controlling the rotation of a tension reel (2,3) based on the input feed velocity command value and correction value of the material to be rolled.

No. of Pages : 38 No. of Claims : 8

(12) PATENT APPLICATION PUBLICATION
(19) INDIA
(22) Date of filing of Application :11/08/2015
(21) Application No.7056/DELNP/2015 A
(43) Publication Date : 25/12/2015

(54) Title of the invention : SUPPORTED DONOR MODIFIED ZIEGLER NATTA CATALYSTS

(51) International classification :C08F110/06,C08F4/651,C08F4/655
(31) Priority Document No :13165940.1
(32) Priority Date :30/04/2013
(33) Name of priority country:EPO
(86) International Application No :PCT/EP2014/058531
Filing Date :28/04/2014
(87) International Publication No :WO 2014/177480
(61) Patent of Addition to Application Number :NA
Filing Date :NA
(62) Divisional to Application Number :NA
Filing Date :NA

(71)**Name of Applicant :**
1)BOREALIS AG
Address of Applicant :IZD Tower Wagramer Str. 17 19 A 1220 Vienna Austria
(72)**Name of Inventor :**
1)SAEED Irfan
2)KOKKO Esa
3)WALDVOGEL Pivi
4)MUSTONEN Marja
5)GAROFF Thomas

(57) Abstract :
Procatalyst comprising an inorganic support a chlorine compound carried on said support a magnesium compound carried on said support a titanium compound carried on said support and a compound comprising two oxygen containing rings wherein said two rings are linked via a bridge selected from the group consisting of carbon bridge silicon bridge ethane 1.2 diyl bridge ethene 1 2 diyl bridge alkylaminomethyl bridge and imine bridge.

No. of Pages : 49 No. of Claims : 16

(12) PATENT APPLICATION PUBLICATION
(19) INDIA
(22) Date of filing of Application :12/06/2015
(21) Application No.5118/DELNP/2015 A
(43) Publication Date : 25/12/2015

(54) Title of the invention : DENGUE VIRUS VACCINE COMPOSITION

(51) International classification :A61K39/12,C07K14/005
(31) Priority Document No :20120179
(32) Priority Date :27/12/2012
(33) Name of priority country :Cuba
(86) International Application No :PCT/CU2013/000008
Filing Date :16/12/2013
(87) International Publication No :WO 2014/101903
(61) Patent of Addition to Application Number :NA
Filing Date :NA
(62) Divisional to Application Number :NA
Filing Date :NA

(71)**Name of Applicant :**
1)CENTRO DE INGENIRIA GENETICA Y BIOTECNOLOGIA
Address of Applicant :Avenida 31 entre 158 y 190. Cubanac¡n, Playa, 11600 La Habana Cuba
(72)**Name of Inventor :**
1)HERMIDA CRUZ ,Lisset
2)GIL GONZ • LEZ, L¡zaro
3)IZQUIERDO OLIVA ,Alienys
4)MARCOS LPEZ, Ernesto
5)SUZARTE PORTAL, Edith
6)GUILL‰N NIETO, Gerardo, Enrique
7)GUZM • N TIRADO, Mara ,Guadalupe
8)VALD‰S PRADO, Iris
9)LAZO VAZQUEZ, Laura
10)GARC • A ARECHAVALETA ,Anglica de la Caridad
11)ALVAREZ VERA, Mayling
12)CASTRO VELAZCO ,Jorge
13)LPEZ FERN • NDEZ, L¡zaro
14)RAM • REZ BARTUTIS ,Rosa, Liset
15)P‰REZ ,FUENTES ,Yusleidi ,de la Caridad
16)P‰REZ ,GUEVARA ,Olga ,Lidia
17)ROMERO FERN • NDEZ, Yaremy

(57) Abstract :
Vaccine compositions that comprise at least one antigen based on the dengue virus (DV) capsid protein and the oligonucleotide identified as SEQ ID NO 1. The vaccine composition that comprises a fusion protein formed by the DV2 capsid and domain III of the envelope protein of the same serotype ,together with the oligonucleotide identified as SEQ ID NO 1, gives rise to higher levels of cellular immune response and protection in mice as compared with that produced by formulations of the same antigen together with oligonucleotides with potential adjuvant capacity which were reported previously. The efficacy of the compositions that comprise the SEQ ID NO 1 oligonucleotide has been demonstrated in non, human primates. These compositions may be monovalent, bivalent or tetravalent and are combined in different immunization regimes with a view to inducing a functional immune response to the four viral serotypes.

No. of Pages : 38 No. of Claims : 15

(12) PATENT APPLICATION PUBLICATION
(21) Application No.5119/DELNP/2015 A
(19) INDIA
(22) Date of filing of Application :12/06/2015
(43) Publication Date : 25/12/2015

(54) Title of the invention : TONGUE- AND -GROOVE COUPLING BETWEEN PANELS OF SELF- SUPPORTING AIR-CONDITIONING DUCTS

(51) International classification :F16L59/10,F16L25/00,F24F13/02
(31) Priority Document No :U201231325
(32) Priority Date :13/12/2012
(33) Name of priority country :Spain
(86) International Application No :PCT/ES2013/070866
Filing Date :11/12/2013
(87) International Publication No :WO 2014/091050
(61) Patent of Addition to Application Number :NA
Filing Date :NA
(62) Divisional to Application Number :NA
Filing Date :NA

(71)**Name of Applicant :**
1)SAINT -GOBAIN CRISTALERIA ,S.L.
Address of Applicant :Principe De Vergara, 132, E- 28002 Madrid Spain
(72)**Name of Inventor :**
1)JUARRANZ MORATILLA ,No
2)DIEZ MONFORTE ,Alfonso
3)PLATEAUX, Claire
4)LPEZ BELBEZE, Gregorio

(57) Abstract :
The invention relates to a tongue- and -groove coupling between panels of self -supporting air -conditioning ducts and the like, of the type that is provided in order to establish an optimum fit of the canted edge corresponding to the panels that are coupled in a tongue- and -groove manner , and also to avoid the air coming into contact with the core of the duct therein. To this end , the panels consist of a core of insulating material complemented by all outer and inner layers based on aluminium o other coating the juxtaposing canted edge or edge between the panels having an oblique cut in relation to the horizontality or longitudinal intermediate line in the join between the two panels; extending the aluminium layer or coating , which determines the inner face of the duct, past the edge of the panel taking into account the oblique surface that defines the coupling profile.

No. of Pages : 8 No. of Claims : 1

(12) PATENT APPLICATION PUBLICATION
(21) Application No.7046/DELNP/2015 A
(19) INDIA
(22) Date of filing of Application :11/08/2015
(43) Publication Date : 25/12/2015

(54) Title of the invention : METHOD OF LAUNDERING A FABRIC

(51) International classification :C11D3/386
(31) Priority Document No :13155776.1
(32) Priority Date :19/02/2013
(33) Name of priority country :EPO
(86) International Application No :PCT/US2014/017049
Filing Date :19/02/2014
(87) International Publication No :WO 2014/130508
(61) Patent of Addition to Application Number :NA
Filing Date :NA
(62) Divisional to Application Number :NA
Filing Date :NA

(71)**Name of Applicant :**
1)THE PROCTER & GAMBLE COMPANY
Address of Applicant :One Procter & Gamble Plaza Cincinnati Ohio 45202 U.S.A.
(72)**Name of Inventor :**
1)LANT Neil Joseph
2)BENNIE Linsey Sarah
3)PATTERSON Steven George
4)BEWICK Lindsay Suzanne
5)GIBSON Keith

(57) Abstract :
A method of laundering a fabric comprising the steps of; (i) contacting the fabric with a lipid esterase selected from class E.C. 3.1.1.3 class E.C. 3.1.1.1 or a combination thereof; (ii) contacting the fabric from step (i) with a soil; (iii) contacting the fabric from step (ii) with a laundry detergent composition wherein the laundry detergent composition optionally comprises a detersive surfactant and optionally comprises a lipid esterase.

No. of Pages : 45 No. of Claims : 14

(12) PATENT APPLICATION PUBLICATION
(19) INDIA
(22) Date of filing of Application :11/08/2015
(21) Application No.7047/DELNP/2015 A
(43) Publication Date : 25/12/2015

(54) Title of the invention : METHOD OF LAUNDERING A FABRIC

(51) International classification	:C11D3/386,C11D3/40,C11D11/00
(31) Priority Document No	:13155784.5
(32) Priority Date	:19/02/2013
(33) Name of priority country	:EPO
(86) International Application No	:PCT/US2014/017050
Filing Date	:19/02/2014
(87) International Publication No	:WO 2014/130509
(61) Patent of Addition to Application Number	:NA
Filing Date	:NA
(62) Divisional to Application Number	:NA
Filing Date	:NA

(71)**Name of Applicant :**
1)THE PROCTER & GAMBLE COMPANY
Address of Applicant :One Procter & Gamble Plaza Cincinnati Ohio 45202 U.S.A.
(72)**Name of Inventor :**
1)LANT Neil Joseph
2)BENNIE Linsey Sarah
3)PATTERSON Steven George
4)BEWICK Lindsay Suzanne

(57) Abstract :
A method of laundering a fabric comprising the steps of; (i) contacting the fabric with a cutinase (ii) contacting the fabric from step (i) with a soil; (iii) contacting the fabric from step (ii) with a laundry detergent composition wherein the laundry detergent composition comprises a hueing agent.

No. of Pages : 41 No. of Claims : 14

(12) PATENT APPLICATION PUBLICATION
(19) INDIA
(22) Date of filing of Application :11/08/2015
(21) Application No.7048/DELNP/2015 A
(43) Publication Date : 25/12/2015

(54) Title of the invention : METHOD OF LAUNDERING A FABRIC

(51) International classification :C11D1/02,C11D1/62,C11D3/386
(31) Priority Document No :13155780.3
(32) Priority Date :19/02/2013
(33) Name of priority country :EPO
(86) International Application No :PCT/US2014/017059
Filing Date :19/02/2014
(87) International Publication No :WO 2014/130512
(61) Patent of Addition to Application Number :NA
Filing Date :NA
(62) Divisional to Application Number :NA
Filing Date :NA

(71)**Name of Applicant :**
1)THE PROCTER & GAMBLE COMPANY
Address of Applicant :One Procter & Gamble Plaza Cincinnati Ohio 45202 U.S.A.
(72)**Name of Inventor :**
1)LANT Neil Joseph
2)BENNIE Linsey Sarah
3)PATTERSON Steven George
4)BEWICK Lindsay Suzanne

(57) Abstract :
A method of laundering a fabric comprising the steps of; (i) contacting a fabric with a lipid esterase; (ii) contacting the fabric from step (i) with a cationically charged fabric softening active wherein the cationically charged fabric softening active is a substrate for the lipid esterase; (iii) contacting the fabric from step (ii) with a laundry detergent composition wherein the laundry detergent composition comprises an anionic surfactant wherein the anionic surfactant is present at the ratio of anionic surfactant to fabric on a weight to weight basis of from 1:200 to 1:500.

No. of Pages : 46 No. of Claims : 14

(12) PATENT APPLICATION PUBLICATION
(19) INDIA
(22) Date of filing of Application :11/08/2015
(21) Application No.7049/DELNP/2015 A
(43) Publication Date : 25/12/2015

(54) Title of the invention : DEHYDRATION HYDROLYSIS PROCESSES AND CATALYSTS THEREFOR

(51) International classification :C01B39/44,C07C41/09,C07C51/09
(31) Priority Document No :13155521.1
(32) Priority Date :15/02/2013
(33) Name of priority country :EPO
(86) International Application No :PCT/EP2014/052843
Filing Date :13/02/2014
(87) International Publication No :WO 2014/125038
(61) Patent of Addition to Application Number :NA
Filing Date :NA
(62) Divisional to Application Number :NA
Filing Date :NA

(71)**Name of Applicant :**
1)BP CHEMICALS LIMITED
Address of Applicant :Chertsey Road Sunbury on Thames Middlesex TW16 7BP U.K.
(72)**Name of Inventor :**
1)CLARK Thomas Edward
2)DITZEL Evert Jan
3)LAW David John
4)WILLIAMS Bruce Leo

(57) Abstract :
Crystalline zeolites having a FER framework type wherein the crystallites have a dimension in the c axis of about 500 nanometres (nm) or less a method for their preparation and a process for the co production of acetic acid and dimethyl ether comprising the step of contacting methyl acetate and methanol in the presence of catalysts comprising the crystalline zeolites.

No. of Pages : 48 No. of Claims : 44

(12) PATENT APPLICATION PUBLICATION
(21) Application No.7050/DELNP/2015 A
(19) INDIA
(22) Date of filing of Application :11/08/2015
(43) Publication Date : 25/12/2015

(54) Title of the invention : APPARATUS AND METHOD FOR WIRELESS COMMUNICATION SYSTEM

(51) International classification :H04W16/14
(31) Priority Document No :201310031299.2
(32) Priority Date :28/01/2013
(33) Name of priority country :China
(86) International Application No :PCT/CN2013/090509
Filing Date :26/12/2013
(87) International Publication No :WO 2014/114163
(61) Patent of Addition to Application Number :NA
Filing Date :NA
(62) Divisional to Application Number :NA
Filing Date :NA

(71)**Name of Applicant :**
1)SONY CORPORATION
Address of Applicant :1 7 1 Konan Minato ku Tokyo 108 0075 Japan
(72)**Name of Inventor :**
1)SUN Chen

(57) Abstract :
Disclosed are an apparatus and a method for wireless communication system. The apparatus is used in a wireless communication scene including a primary system and several secondary systems and comprises: a distribution estimation apparatus (1901) being configured for estimating the geographical distribution densities for the several secondary systems; a clustering apparatus (1903) being configured to cluster according to the geographical distribution densities the several secondary systems into one or more clusters and the geographical distribution of the secondary systems in each cluster being uniformity; and a resource configuration apparatus (1905) being configured to determine in a cluster per unit the available resource information which can be used by the secondary systems in the transmission resource of the primary system.

No. of Pages : 73 No. of Claims : 41

(12) PATENT APPLICATION PUBLICATION
(19) INDIA
(22) Date of filing of Application :11/08/2015
(21) Application No.7045/DELNP/2015 A
(43) Publication Date : 25/12/2015

(54) Title of the invention : BUTYL RUBBER IONOMER THERMOPLASTIC GRAFT COPOLYMERS AND METHODS FOR PRODUCTION THEREOF

(51) International classification :C08F8/00,C08F210/12,C08F8/20
(31) Priority Document No :61/763509
(32) Priority Date :12/02/2013
(33) Name of priority country :U.S.A.
(86) International Application No :PCT/CA2014/050098
Filing Date :12/02/2014
(87) International Publication No :WO 2014/124535
(61) Patent of Addition to Application Number :NA
Filing Date :NA
(62) Divisional to Application Number :NA
Filing Date :NA

(71)**Name of Applicant :**
1)LANXESS INC.
Address of Applicant :1265 Vidal Street South Sarnia Ontario N7T 7M2 Canada
(72)**Name of Inventor :**
1)SIEGERS Conrad
2)STEEVENSZ Richard

(57) Abstract :
The present invention is directed to the functionalization of butyl rubber ionomer and optionally the grafting of polyamide to halobutyl rubber ionomers. Specifically disclosed are methods and products resulting therefrom for creating functionalized ionomers and grafting polyamide to halobutyl ionomers via reactive extrusion. The process comprises reacting a halobutyl polymer with at least one nitrogen and/or phosphorous based nucleophile to provide a halobutyl ionomer comprising conjugated diene units; grafting of an amine reactive dienophile to said ionomer to form a functionalized ionomer; and optionally blending the resulting functionalized ionomer with polyamide.

No. of Pages : 32 No. of Claims : 23

(12) PATENT APPLICATION PUBLICATION
(19) INDIA
(22) Date of filing of Application :03/12/2012
(21) Application No.10130/CHENP/2012 A
(43) Publication Date : 25/12/2015

(54) Title of the invention : COMPOUNDS WITH A WOODY NOTE

(51) International classification :C11B
(31) Priority Document No :10 01938
(32) Priority Date :05/05/2010
(33) Name of priority country :France
(86) International Application No :PCT/IB2011/051976
Filing Date :04/05/2011
(87) International Publication No : NA
(61) Patent of Addition to Application Number :NA
Filing Date :NA
(62) Divisional to Application Number :NA
Filing Date :NA

(71)**Name of Applicant :**
1)V. MANE FILS
Address of Applicant :620 Route de Grasse F-06620 Bar Sur Loup France France
(72)**Name of Inventor :**
1)MURATORE Agn¨s
2)CHANOT Jean-Jacques

(57) Abstract :
The invention relates to the chemistry of fragrances and to the field of perfumery. It relates more particularly to compounds with a woody note responding to the general formula: in which: the ring with 6 carbon atoms is saturated or has a double bond between carbons C1 and C2 or between carbons C1 and C6 R is selected from a C2-C5 alkyl or C2-C5 alkenyl group.

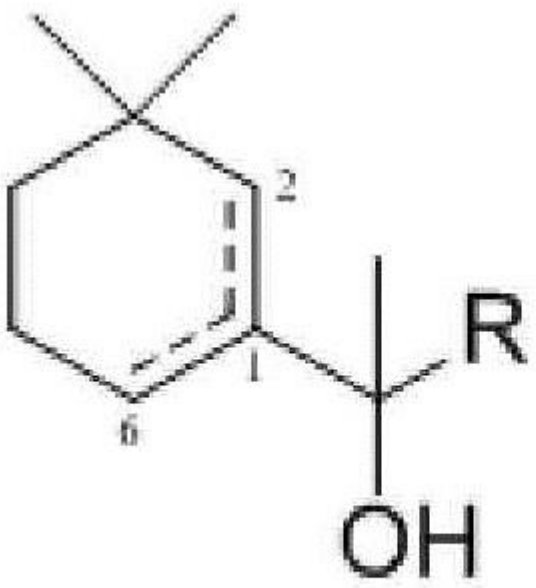

I

No. of Pages : 24 No. of Claims : 13

(12) PATENT APPLICATION PUBLICATION
(19) INDIA
(22) Date of filing of Application :03/12/2012
(21) Application No.10131/CHENP/2012 A
(43) Publication Date : 25/12/2015

(54) Title of the invention : WATER PUMP

(51) International classification :B41J
(31) Priority Document No :2010-121298
(32) Priority Date :27/05/2010
(33) Name of priority country :Japan
(86) International Application No :PCT/JP2011/055522
Filing Date :09/03/2011
(87) International Publication No : NA
(61) Patent of Addition to Application Number :NA
Filing Date :NA
(62) Divisional to Application Number :NA
Filing Date :NA

(71)**Name of Applicant :**
1)AISIN SEIKI KABUSHIKI KAISHA
Address of Applicant :1 Asahi-machi 2-chome Kariya-shi Aichi 4488650 Japan Japan
(72)**Name of Inventor :**
1)CHIBA Atsushi
2)HASHIGUCHI Itsuro
3)ONOZUKA Megumi

(57) Abstract :
A water pump includes a mechanical seal provided between a housing and a rotary shaft for preventing cooling water from leaking from a whirl chamber. The housing forms a space into which cooling water leaked from between the mechanical seal and the rotary shaft is flown and a water vent for discharging cooling water flown into the space. The housing is joined with a thermostat cover to form a reservoir communicating with the water vent. The reservoir has a drain for releasing evaporated cooling water to the air and a control wall for preventing cooling water remaining as liquid from flowing out through the drain.

No. of Pages : 18 No. of Claims : 5

(12) PATENT APPLICATION PUBLICATION
(19) INDIA
(22) Date of filing of Application :03/12/2012
(21) Application No.10135/CHENP/2012 A
(43) Publication Date : 25/12/2015

(54) Title of the invention : LINK ADAPTATION IN MULTI-CARRIER COMMUNICATION SYSTEMS •

(51) International classification :H04L
(31) Priority Document No :61/347,058
(32) Priority Date :21/05/2010
(33) Name of priority country :U.S.A.
(86) International Application No :PCT/US2011/037347
Filing Date :20/05/2011
(87) International Publication No : NA
(61) Patent of Addition to Application Number :NA
Filing Date :NA
(62) Divisional to Application Number :NA
Filing Date :NA

(71)**Name of Applicant :**
1)QUALCOMM INCORPORATED
Address of Applicant :Attn: International IP Administration 5775 Morehouse Drive San Diego California 92121-1714 United States of America U.S.A.
(72)**Name of Inventor :**
1)AVUDAINAYAGAM Arun
2)RENDE Deniz
3)AFKHAMIE Kaywan
4)YONGE Lawrence W. III

(57) Abstract :
A method is disclosed for transmitting information in a multicarrier system that includes: identifying a first set of carrier signals, associated with a first code rate; and identifying a second set of carrier signals, associated with a second code rate. The method can also include partitioning a first sequence of bits representing a single symbol into a first group of bits associated with the first code rate and at least a second group of bits associated with the second code rate; interleaving a subset of bits from the first group to map multiple bits from the first group to respective carrier signals in the first set of carrier signals to achieve the first code rate; and interleaving a subset of bits from the second group to map multiple bits from the second group to respective carrier signals in the second set of carrier signals to achieve the second code rate. [Fig. 4]

No. of Pages : 37 No. of Claims : 20

(12) PATENT APPLICATION PUBLICATION
(19) INDIA
(22) Date of filing of Application :03/12/2012
(21) Application No.10137/CHENP/2012 A
(43) Publication Date : 25/12/2015

(54) Title of the invention : METHOD AND APPARATUS FOR WIRELESS DISTRIBUTED COMPUTING

(51) International classification :H04W
(31) Priority Document No :61/351,724
(32) Priority Date :04/06/2010
(33) Name of priority country :U.S.A.
(86) International Application No :PCT/US2011/039177
Filing Date :03/06/2011
(87) International Publication No : NA
(61) Patent of Addition to Application Number :NA
Filing Date :NA
(62) Divisional to Application Number :NA
Filing Date :NA

(71)**Name of Applicant :**
1)QUALCOMM Incorporated
Address of Applicant :Attn: International IP Administration 5775 Morehouse Drive San Diego California 92121-1714 USA U.S.A.
(72)**Name of Inventor :**
1)KRISHNASWAMY Dilip
2)YALLAPRAGADA Subbarao V.
3)NANDA Sanjiv
4)DAS Soumya
5)SOLIMAN Samir Salib
6)TINNAKORNSRISUPHAP Peerapol
7)NARAYANAN Vidya

(57) Abstract :
Systems and methods for distributed computing between communication devices. A femto node is treated as a trusted extension of a user equipment and performs processing tasks on behalf of the user equipment. The femto node is also treated as a trusted extension of network servers and performs services on behalf of the network servers. Tasks are thus distributed between the network servers the femto node and one or more user equipments. The tasks include processing data filtering incoming messages and caching network service information.

No. of Pages : 56 No. of Claims : 32

(12) PATENT APPLICATION PUBLICATION
(19) INDIA
(22) Date of filing of Application :03/12/2012
(21) Application No.10138/CHENP/2012 A
(43) Publication Date : 25/12/2015

(54) Title of the invention : ACTIVATION METHOD ACTIVATION APPARATUS AND COMMUNICATION SYSTEM

(51) International classification :H04W
(31) Priority Document No :201110042557.8
(32) Priority Date :16/02/2011
(33) Name of priority country :China
(86) International Application No :PCT/CN2011/079238
Filing Date :01/09/2011
(87) International Publication No : NA
(61) Patent of Addition to Application Number :NA
Filing Date :NA
(62) Divisional to Application Number :NA
Filing Date :NA

(71)**Name of Applicant :**
1)Huawei Technologies Co. Ltd.
Address of Applicant :Huawei Administration Building Bantian Longgang District Shenzhen Guangdong 518129 P.R. China China
(72)**Name of Inventor :**
1)ZHANG Jinyu

(57) Abstract :
An activation method includes: receiving a current location of a terminal; determining whether an application program on the terminal needs to be activated according to the current location; if the application program needs to be activated generating an activation message; and transmitting the activation message to the terminal to activate the application program so that the activated application program is able to modify a called number needed to be modified according to a built-in number modification rule. An activation apparatus corresponding to the activation method is further provided. With the present invention the complexity of the user operating the called number can be reduced and the user experience can be enhanced.

No. of Pages : 21 No. of Claims : 11

(12) PATENT APPLICATION PUBLICATION
(19) INDIA
(22) Date of filing of Application :12/12/2012
(21) Application No.10380/CHENP/2012 A
(43) Publication Date : 25/12/2015

(54) Title of the invention : METHODS AND APPARATUSES FOR GESTURE BASED REMOTE CONTROL. •

(51) International classification :G06F 3/01, G06F 3/033
(31) Priority Document No :12/816,885
(32) Priority Date :16/06/2010
(33) Name of priority country :U.S.A.
(86) International Application No :PCT/US2011/040766
Filing Date :16/06/2011
(87) International Publication No : NA
(61) Patent of Addition to Application Number :NA
Filing Date :NA
(62) Divisional to Application Number :NA
Filing Date :NA

(71)**Name of Applicant :**
1)QUALCOMM INCORPORATED
Address of Applicant :Attn: International IP Administration 5775 Morehouse Drive San Diego California 92121-1714 United States of America U.S.A.
(72)**Name of Inventor :**
1)ABIFAKER Chadia
2)VELARDE Ruben M.

(57) Abstract :
Methods and apparatuses are provided that may be implemented in and/or with a mobile device to allow gesture based remote control of one or more controllable devices. FIG. 5

No. of Pages : 50 No. of Claims : 78

(12) PATENT APPLICATION PUBLICATION
(21) Application No.10382/CHENP/2012 A
(19) INDIA
(22) Date of filing of Application :12/12/2012
(43) Publication Date : 25/12/2015

(54) Title of the invention : METHOD FOR PRODUCING CARBAMATE METHOD FOR PRODUCING ISOCYANATE CARBAMATE PRODUCTION SYSTEM AND ISOCYANATE PRODUCTION SYSTEM

(51) International classification	:C07C 269/04 , C07C 263/04 , C07C 265/00
(31) Priority Document No	:2010-137642
(32) Priority Date	:16/06/2010
(33) Name of priority country	:Japan
(86) International Application No	:PCT/JP2011/061515
Filing Date	:19/05/2011
(87) International Publication No	: NA
(61) Patent of Addition to Application Number	:NA
Filing Date	:NA
(62) Divisional to Application Number	:NA
Filing Date	:NA

(71)**Name of Applicant :**
1)MITSUI CHEMICALS INC.
Address of Applicant :5-2 Higashi-Shimbashi 1-chome Minato-ku Tokyo 105-7117 Japan. Japan
(72)**Name of Inventor :**
1)TAKAMATSU KOJI
2)KATO SATOSHI
3)FUKUDA TAKESHI
4)NAKANO TETSUYA
5)SASAKI MASAAKI

(57) Abstract :
A method for producing carbamate including a urea production step; a carbamate-forming step; an ammonia separation step of absorbing the gas with water in the presence of carbonate to produce a gas absorption water, and separating ammonia; an aqueous alcohol solution separation step of separating an aqueous alcohol solution from the gas absorption water; an ammonia/carbon dioxide separation step of separating carbon dioxide gas from the aqueous ammonia solution in the gas absorption water from which the aqueous alcohol solution is separated; an aqueous ammonia solution reusing step of mixing the aqueous ammonia solution and carbonate with the water to be used for production of the gas absorption water.

No. of Pages : 73 No. of Claims : 16

(12) PATENT APPLICATION PUBLICATION
(21) Application No.10383/CHENP/2012 A
(19) INDIA
(22) Date of filing of Application :12/12/2012
(43) Publication Date : 25/12/2015

(54) Title of the invention : TRANSDERMAL ABSORPTION PROMOTER AND EXTERNAL SKIN FORMULATION COMPRISING THE SAME

(51) International classification	:A61K 9/00 , A61K 47/08 , A61K 47/10
(31) Priority Document No	:2010-137349
(32) Priority Date	:16/06/2010
(33) Name of priority country	:Japan
(86) International Application No	:PCT/JP2011/064322
Filing Date	:16/06/2011
(87) International Publication No	: NA
(61) Patent of Addition to Application Number	:NA
Filing Date	:NA
(62) Divisional to Application Number	:NA
Filing Date	:NA

(71)**Name of Applicant :**
1)TAKASAGO INTERNATIONAL CORPORATION
Address of Applicant :37-1 Kamata 5-chome Ohta-ku Tokyo 144-8721 Japan. Japan
(72)**Name of Inventor :**
1)Kenya ISHIDA
2)Yasuko OBATA
3)Kozo TAKAYAMA

(57) Abstract :
The present invention provides a substance which promotes the transdermal absorption of a pharmacologically active component while little irritating the skin. The present invention relates to a transdermal absorption promoter which comprises as the active component at least one member selected from among isopulegol 2-(menthoxy)ethanol and 2-methyl-3-(menthoxy)propane-1 2-diol; and an external skin formulation which comprises a pharmacologically active component such as a psychotropic component an anti-inflammatory component an analgesic component an antipyretic component a whitening component or a hair growth-promoting component together with the aforesaid transdermal absorption promoter.

No. of Pages : 37 No. of Claims : 8

(12) PATENT APPLICATION PUBLICATION
(19) INDIA
(22) Date of filing of Application :12/12/2012
(21) Application No.10384/CHENP/2012 A
(43) Publication Date : 25/12/2015

(54) Title of the invention : METHOD FOR PREPARING BROUSSONETIA KAZINOKI EXTRACT

(51) International classification :A61K 36/60 , A61K 8/97 , A61P 17/00
(31) Priority Document No :10-2010-0057943
(32) Priority Date :18/06/2010
(33) Name of priority country :Republic of Korea
(86) International Application No :PCT/KR2011/004380
Filing Date :15/06/2011
(87) International Publication No : NA
(61) Patent of Addition to Application Number :NA
Filing Date :NA
(62) Divisional to Application Number :NA
Filing Date :NA

(71)**Name of Applicant :**
1)AMOREPACIFIC CORPORATION
Address of Applicant :181 2-ga Hangang-ro Yongsan-gu Seoul 140-777 Republic of Korea. Republic of Korea
(72)**Name of Inventor :**
1)LIM Hyung Jun
2)LEE Jin Young
3)PARK Sun Young
4)AN Soon Ae
5)LEE Chan Woo
6)KIM Eun Joo
7)KIM Jun Oh
8)HAN Sang Hun
9)KIM Han Kon

(57) Abstract :
The present invention provides a method for preparing a Broussonetia kazinoki extract comprising the following steps: solvent extracting Broussonetia kazinoki; isolating the Broussonetia kazinoki extract extracted in the previous step; and crystallizing the Broussonetia kazinoki extract isolated in the previous step. It is possible to prepare a Broussonetia kazinoki extract having a remarkable skin whitening effect and excellent stability through the method for preparing a Broussonetia kazinoki extract.

No. of Pages : 49 No. of Claims : 15

(12) PATENT APPLICATION PUBLICATION
(21) Application No.10385/CHENP/2012 A
(19) INDIA
(22) Date of filing of Application :12/12/2012
(43) Publication Date : 25/12/2015

(54) Title of the invention : MONITORING COMMUNICATIONS •

(51) International classification :G06F 17/18
(31) Priority Document No :12/833,489
(32) Priority Date :09/07/2010
(33) Name of priority country :U.S.A.
(86) International Application No :PCT/US2011/035314
Filing Date :05/05/2011
(87) International Publication No : NA
(61) Patent of Addition to Application Number :NA
Filing Date :NA
(62) Divisional to Application Number :NA
Filing Date :NA

(71)**Name of Applicant :**
1)BANK OF AMERICA CORPORATION
Address of Applicant :NC1-027-20-05 214 N. Tryon Street Charlotte North Carolina 28255 United States of America U.S.A.
(72)**Name of Inventor :**
1)GILLETTE Zachary Lynn
2)SORENSEN Amanda

(57) Abstract :
Methods computer readable media and apparatuses for monitoring communications are presented. A first username may be compared with a second username. The first username may be associated with a sender of a communication and the second username may be associated with a recipient of the communication. Thereafter based on the comparing the probability that the first username and the second username are both associated with a single entity may be determined. In at least one arrangement in response to determining that the probability exceeds a threshold it may be determined that the first username and the second username are both associated with the single entity. In at least one additional arrangement the threshold may be modified automatically based on previously analyzed incident data. [FIG: 6]

No. of Pages : 38 No. of Claims : 21

(12) PATENT APPLICATION PUBLICATION
(19) INDIA
(22) Date of filing of Application :13/12/2012
(21) Application No.10386/CHENP/2012 A
(43) Publication Date : 25/12/2015

(54) Title of the invention : STRUCTURE FOR MOUNTING ELECTRIC VACUUM PUMP •

(51) International classification :B60T 17/02 , F04B 39/00 , B60K 6/40
(31) Priority Document No :2010-138976
(32) Priority Date :18/06/2010
(33) Name of priority country :Japan
(86) International Application No :PCT/JP2011/055233
Filing Date :07/03/2011
(87) International Publication No : NA
(61) Patent of Addition to Application Number :NA
Filing Date :NA
(62) Divisional to Application Number :NA
Filing Date :NA

(71)**Name of Applicant :**
1)SUZUKI MOTOR CORPORATION
Address of Applicant :300 Takatsuka-cho Minami-ku Hamamatsu-shi Shizuoka-ken Japan Japan
(72)**Name of Inventor :**
1)MATSUMOTO Yoshihiro
2)HIROSE Daisuke

(57) Abstract :
In structure for mounting an electric vacuum pump 1 to a vehicle body frame 3 via a bracket 2 the bracket 2 includes a wobble suppression portion that is a formed so as to surround a portion of the electric vacuum pump 1 at a position vertically apart from a pump mounting portion 2B and a wobble prevention mount 5 that suppresses wobbling of the electric vacuum pump 1 in abutment against the electric vacuum pump 1 is mounted to the wobble suppression portion 2F.

No. of Pages : 17 No. of Claims : 3

(12) PATENT APPLICATION PUBLICATION
(21) Application No.10860/CHENP/2012 A
(19) INDIA
(22) Date of filing of Application :27/12/2012
(43) Publication Date : 25/12/2015

(54) Title of the invention : VALVE TIMING CONTROL APPARATUS AND VALVE TIMING CONTROL MECHANISM

(51) International classification :F01L1/34
(31) Priority Document No :2010-160547
(32) Priority Date :15/07/2010
(33) Name of priority country :Japan
(86) International Application No :PCT/JP2011/065589
Filing Date :07/07/2011
(87) International Publication No : NA
(61) Patent of Addition to Application Number :NA
Filing Date :NA
(62) Divisional to Application Number :NA
Filing Date :NA

(71)**Name of Applicant :**
1)AISIN SEIKI KABUSHIKI KAISHA
Address of Applicant :1 Asahi-machi 2-chome Kariya-shi Aichi 4488650 Japan Japan
(72)**Name of Inventor :**
1)FUJIWAKI Kenji
2)KOBAYASHI Masaki
3)KAWAI Yoshihiro
4)IKEDA Kenji

(57) Abstract :
In order to provide a valve timing control apparatus that can realize a locked state speedily prior to engine stop and that can dispense with a switching valve dedicated to controlling of a restricting mechanism and a locking mechanism, the valve timing control apparatus includes a partitioning portion provided in a driven-side rotary member for partitioning the fluid pressure chamber into an advance angle chamber and a retard angle chamber, a restricting member provided in the driven-side rotary member and projectable and retractable relative to a driving-side rotary member, a restricting recess formed in the driving-side rotary member and restricting a relative rotational phase to a predetermined range in association with projection of the restricting member therein, a locking member disposed in the driven-side rotary member and projectable and retractable relative to the driving-side rotary member, a locking recess formed in the driving-side rotary member and locking the relative rotational phase to the predetermined phase in association with projection of the locking member therein, a communication passage formed between the restricting member and the locking member, and an urging passage for feeding fluid for projecting the restricting member into the restricting recess.

No. of Pages : 38 No. of Claims : 8

(12) PATENT APPLICATION PUBLICATION
(19) INDIA
(22) Date of filing of Application :27/12/2012
(21) Application No.10861/CHENP/2012 A
(43) Publication Date : 25/12/2015

(54) Title of the invention : MICRO MIXER

(51) International classification :B01F 5/00
(31) Priority Document No :2010-146232
(32) Priority Date :28/06/2010
(33) Name of priority country :Japan
(86) International Application No :PCT/JP2011/064388
Filing Date :23/06/2011
(87) International Publication No : NA
(61) Patent of Addition to Application Number :NA
Filing Date :NA
(62) Divisional to Application Number :NA
Filing Date :NA

(71)**Name of Applicant :**
1)DIC CORPORATION
Address of Applicant :35-58 Sakashita 3-Chome Itabashi-ku Tokyo 174-8520 Japan Japan
(72)**Name of Inventor :**
1)ISHIYAMA Fumihiko
2)HIZAWA Takeshi
3)KAMEI Kiyoo

(57) Abstract :
Disclosed is a micro mixer which includes a mixing plate (14) with a first channel-forming section and a second channel-forming section. The first channel-forming section has a first channel formed for a first fluid to flow therethrough while the second channel-forming section has a second channel formed for a second fluid to flow therethrough. Between the first channel-forming section and the second channel-forming section there is provided a combined channel in which the first fluid and the second fluid merge with each other. The outlet of the first channel and the outlet of the second channel are opposed to each other with the combined channel disposed therebetween. The position of the outlet of the first channel facing the center axis of the combined channel is included in or the same as the position of the outlet of the second channel facing the center axis.

No. of Pages : 38 No. of Claims : 7

(12) PATENT APPLICATION PUBLICATION
(19) INDIA
(22) Date of filing of Application :28/12/2012
(21) Application No.10862/CHENP/2012 A
(43) Publication Date : 25/12/2015

(54) Title of the invention : METHOD AND APPARATUS FOR PROVIDING UNIFORM MACHINE-TO-MACHINE ADDRESSING

(51) International classification :H04W
(31) Priority Document No :61/363,999
(32) Priority Date :13/07/2010
(33) Name of priority country :U.S.A.
(86) International Application No :PCT/US2011/043918
Filing Date :13/07/2011
(87) International Publication No : NA
(61) Patent of Addition to Application Number :NA
Filing Date :NA
(62) Divisional to Application Number :NA
Filing Date :NA

(71)**Name of Applicant :**
1)QUALCOMM Incorporated
Address of Applicant :Attn: International IP Administration 5775 Morehouse Drive San Diego California 92121-1714 USA U.S.A.
(72)**Name of Inventor :**
1)CHERIAN George
2)WANG Jun
3)PATWARDHAN Ravindra Manohar

(57) Abstract :
An apparatus and method for providing uniform addressing for Machine-to-machine (M2M) services including receiving by a first machine-to-machine (M2M) module a content from a first machine-to-machine (M2M) device using a first format wherein the content is addressed for transmission to a second M2M device; converting the received content to a second format for transmission to a second M2M module wherein the second M2M module is operable to convert the received content back to the first format for transmission to the second M2M device; and transmitting the converted content to the second M2M device through the second M2M module.

No. of Pages : 88 No. of Claims : 44

(12) PATENT APPLICATION PUBLICATION
(19) INDIA
(22) Date of filing of Application :13/12/2012
(21) Application No.10393/CHENP/2012 A
(43) Publication Date : 25/12/2015

(54) Title of the invention : RECLOSABLE FLEXIBLE PACKAGING AND METHODS FOR MANUFACTURING SAME

(51) International classification :B65B9/20,B65B61/18,B65D75/58
(31) Priority Document No :61/345778
(32) Priority Date :18/05/2010
(33) Name of priority country :U.S.A.
(86) International Application No :PCT/US2011/037054
Filing Date :18/05/2011
(87) International Publication No :WO 2011/146658
(61) Patent of Addition to Application Number :NA
Filing Date :NA
(62) Divisional to Application Number :NA
Filing Date :NA

(71)**Name of Applicant :**
1)KRAFT FOODS GLOBAL BRANDS LLC
Address of Applicant :Three Lakes Drive Northfield Illinois 60093 U.S.A.
(72)**Name of Inventor :**
1)LYZENGA Deborah A.
2)WEBER Jeffrey T.
3)DOLL Paul E.
4)FENECH Louis P.

(57) Abstract :
Flexible film packages having a partial initial seal against ambient atmosphere and are easily openable and reclosable. The flexible film packages are generally resealable to extend the shelf life or freshness of products contained therein once the package is initially opened. By one approach the flexible film has two opposing edge portions that meet to form a longitudinal seal extending from a first end seal to a second end seal. The flexible film may have a score that defines a package opening. An elongated closure layer (14) may extend over the score and may extend from a first end seal (26) to a second end seal (28) and within the opposing edge portions that form the longitudinal seal (24). The elongated closure layer may have a tack free gripping portion (40) used to release at least a portion of the elongated closure from the flexible film to form the package opening.

No. of Pages : 95 No. of Claims : 54

(12) PATENT APPLICATION PUBLICATION
(21) Application No.104/CHE/2014 A
(19) INDIA
(22) Date of filing of Application :09/01/2014
(43) Publication Date : 25/12/2015

(54) Title of the invention : A METHOD OF COMBUSTING A GASEOUS FUEL CONTAINING AT LEAST ONE COMBUSTIBLE GAS IN AN INTERNAL COMBUSTION ENGINE

(51) International classification :F02B
(31) Priority Document No :NA
(32) Priority Date :NA
(33) Name of priority country :NA
(86) International Application No :NA
Filing Date :NA
(87) International Publication No : NA
(61) Patent of Addition to Application Number :NA
Filing Date :NA
(62) Divisional to Application Number :NA
Filing Date :NA

(71)**Name of Applicant :**
1)INDIAN INSTITUTE OF TECHNOLOGY MADRAS
Address of Applicant :IIT P. O, CHENNAI - 600 036 Tamil Nadu India
(72)**Name of Inventor :**
1)ARUN PRASATH. K
2)DR. A. RAMESH

(57) Abstract :
A method of combusting a gaseous fuel containing at least one combustible gas in an internal combustion engine comprises of steps such as subjecting to predetermined pressure. Such fuel is then stored in a chamber. Atmospheric air is allowed to enter the engine through known inlet. The pressurized fuel is injected from the chamber into the engine at a point when the piston of the engine is at a predetermined position near the beginning of compression. This is to enable the fuel to get compressed during the compression stroke and ignited thereafter. Then it is followed by the power stroke and exhaust strokes of the engine.

No. of Pages : 7 No. of Claims : 5

(12) PATENT APPLICATION PUBLICATION
(19) INDIA
(22) Date of filing of Application :27/12/2012
(21) Application No.10853/CHENP/2012 A
(43) Publication Date : 25/12/2015

(54) Title of the invention : GALENIC FORMULATIONS OF ORGANIC COMPOUNDS

(51) International classification	:A61K 9/20 , A61K 9/28
(31) Priority Document No	:60/553,878
(32) Priority Date	:17/03/2004
(33) Name of priority country	:U.S.A.
(86) International Application No	:PCT/EP2005/02798
Filing Date	:16/03/2005
(87) International Publication No	:WO/2005/089729
(61) Patent of Addition to Application Number	:NA
Filing Date	:NA
(62) Divisional to Application Number	:3372/CHENP/2006
Filed on	:16/03/2005

(71)**Name of Applicant :**
1)NOVARTIS AG
Address of Applicant :LICHTSTRASSE 35, CH-4056 BASEL Switzerland
(72)**Name of Inventor :**
1)RIGASSI-DIETRICH, PETRA, GISELA
2)SCHMID, MARTIN

(57) Abstract :
The present invention relates to a solid oral form comprising a therapeutically effective amount of aliskiren or a pharmaceutically acceptable salt thereof, and wherein the active incredient is present in an amount of more than 46% by weight based on the total weight of the oral dosage form.

No. of Pages : 22 No. of Claims : 20

(12) PATENT APPLICATION PUBLICATION
(19) INDIA
(22) Date of filing of Application :27/12/2012
(21) Application No.10857/CHENP/2012 A
(43) Publication Date : 25/12/2015

(54) Title of the invention : SYSTEM AND METHOD FOR TRANSMITTING SESSION INITIATION PROTOCOL MESSAGES

(51) International classification	:H04L 29/06 , H04W 4/12 , H04W 80/10
(31) Priority Document No	:201010199054.7
(32) Priority Date	:08/06/2010
(33) Name of priority country	:China
(86) International Application No	:PCT/CN2011/070370
Filing Date	:18/01/2011
(87) International Publication No	: NA
(61) Patent of Addition to Application Number	:NA
Filing Date	:NA
(62) Divisional to Application Number	:NA
Filing Date	:NA

(71)**Name of Applicant :**
1)ZTE CORPORATION
Address of Applicant :ZTE Plaza Keji Road South Hi-Tech Industrial Park Nanshan District Shenzhen Guangdong Province 518057 P.R. China China
(72)**Name of Inventor :**
1)YANG Min
2)LUO Huiping
3)HAN Yinjun
4)JIA Xinhua

(57) Abstract :
The present invention relates to a system and method for sending a Session Initiation Protocol (SIP) message. The system includes: a core network element (202) a client terminal (204) a plurality of application servers (206) a primary SIP message distribution device (208) an SIP message authenticating and forwarding device (210) and a secondary SIP message distribution device (212). By means of the present invention the cascade among SIP distribution devices is achieved and high-capacity distribution of application servers is achieved. FIG. 2

No. of Pages : 31 No. of Claims : 10

(12) PATENT APPLICATION PUBLICATION
(21) Application No.10858/CHENP/2012 A
(19) INDIA
(22) Date of filing of Application :27/12/2012
(43) Publication Date : 25/12/2015

(54) Title of the invention : BILL DEPOSITING/WITHDRAWING MACHINE

(51) International classification	:G07D 9/00 , G07D 7/00 , G07D 7/20
(31) Priority Document No	:2010-231655
(32) Priority Date	:14/10/2010
(33) Name of priority country	:Japan
(86) International Application No	:PCT/JP2011/067243
Filing Date	:28/07/2011
(87) International Publication No	: NA
(61) Patent of Addition to Application Number	:NA
Filing Date	:NA
(62) Divisional to Application Number	:NA
Filing Date	:NA

(71)**Name of Applicant :**
1)Oki Electric Industry Co. Ltd.
Address of Applicant :1-7-12 Toranomon Minato-ku Tokyo 105-8460 Japan Japan
(72)**Name of Inventor :**
1)Katsumi IKEGAMI
2)Youichi NOROTA

(57) Abstract :
Bills are fed from a customer serving section to a discriminator according to continuous feeding and the discriminator reads identification information of the bills to store the identification information in an identification information storage. When the discriminator discriminates a bill it determines whether or not the same identification information as the identification information of the bill is stored in the identification information storage. If the same identification information is stored the customer serving section feeds the bills to the discriminator according to intermittent feeding. This prevents any bill from being undiscriminated.

No. of Pages : 56 No. of Claims : 4

(12) PATENT APPLICATION PUBLICATION
(21) Application No.10401/CHENP/2012 A
(19) INDIA
(22) Date of filing of Application :13/12/2012
(43) Publication Date : 25/12/2015

(54) Title of the invention : METHOD AND DEVICE FOR TRANSMITTING INFORMATION ON PHYSICAL UPLINK CONTROL CHANNEL

(51) International classification	:H04L 1/18 , H04B 7/24, H04L 5/00
(31) Priority Document No	:201010204873.6
(32) Priority Date	:13/06/2010
(33) Name of priority country	:China
(86) International Application No	:PCT/CN2011/074544
Filing Date	:24/05/2011
(87) International Publication No	: NA
(61) Patent of Addition to Application Number	:NA
Filing Date	:NA
(62) Divisional to Application Number	:NA
Filing Date	:NA

(71)**Name of Applicant :**
1)Huawei Technologies Co. Ltd.
Address of Applicant :Huawei Administration Building Bantian Longgang Shenzhen Guangdong 518129 P.R. China China
(72)**Name of Inventor :**
1)LV Yongxia
2)CHENG Yan

(57) Abstract :
The present invention discloses a method and a device for transmitting information on a physical uplink control channel (PUCCH). The method includes the following steps: a user equipment (UE) selects information from channel state information (CSI) to transmit (S1); the information selected from the CSI is transmitted on the PUCCH with one or both of hybrid automatic retransmission acknowledgment information and a scheduling request (S2) which enables a base station to obtain not only the information in the CSI but also one or both of the hybrid automatic retransmission acknowledgement information and the scheduling request from the PUCCH. The present invention avoids the problem of system downlink throughput degradation caused by dropping all CSI by the UE in the prior art and avoids the problem that system downlink throughput is influenced by unnecessary data retransmission on a downlink carrier caused by ACK/NACK bundling among carriers.

No. of Pages : 71 No. of Claims : 25

(12) PATENT APPLICATION PUBLICATION
(19) INDIA
(22) Date of filing of Application :13/12/2012
(21) Application No.10402/CHENP/2012 A
(43) Publication Date : 25/12/2015

(54) Title of the invention : SELECTING A CHANNEL OFFSET FOR A FEMTOCELL THAT DIFFERS FROM THE CHANNEL OFFSET OF A NEIGHBORING MACROCELL

(51) International classification :H04W 24/02 , H04L 5/00
(31) Priority Document No :61/355,498
(32) Priority Date :16/06/2010
(33) Name of priority country :U.S.A.
(86) International Application No :PCT/US2011/040779
Filing Date :16/06/2011
(87) International Publication No : NA
(61) Patent of Addition to Application Number :NA
Filing Date :NA
(62) Divisional to Application Number :NA
Filing Date :NA

(71)**Name of Applicant :**
1)QUALCOMM Incorporated
Address of Applicant :Attn: International IP Administration 5775 Morehouse Drive San Diego California 92121-1714 USA U.S.A.
(72)**Name of Inventor :**
1)TOKGOZ Yeliz
2)BLACK Peter John
3)YAVUZ Mehmet
4)SORIAGA Joseph B.
5)MAKH Vansh Pal Singh

(57) Abstract :
Systems and methods are described herein for managing beacon signaling in a wireless communication system. A method described herein includes identifying a neighboring macrocell and a time division multiplexing (TDM) channel offset of the neighboring macrocell the channel offset corresponding to at least one of a signaling channel or an overhead channel; selecting a local channel offset that differs from the channel offset of the neighboring macrocell; and generating a transmission schedule such that first transmissions are omitted for at least a portion of transmission intervals of the neighboring macrocell; wherein the transmission intervals of the neighboring macrocell are identified according to the channel offset of the neighboring macrocell and wherein the first transmissions include at least one of pilot transmissions medium access control (MAC) transmissions or traffic transmissions.

No. of Pages : 35 No. of Claims : 40

(12) PATENT APPLICATION PUBLICATION
(19) INDIA
(22) Date of filing of Application :13/12/2012
(21) Application No.10403/CHENP/2012 A
(43) Publication Date : 25/12/2015

(54) Title of the invention : MANAGING PACKET DATA NETWORK PDN CONNECTIVITY

(51) International classification :H04W 76/02
(31) Priority Document No :61/355,918
(32) Priority Date :17/06/2010
(33) Name of priority country :U.S.A.
(86) International Application No :PCT/US2011/040992
Filing Date :17/06/2011
(87) International Publication No : NA
(61) Patent of Addition to Application Number :NA
Filing Date :NA
(62) Divisional to Application Number :NA
Filing Date :NA

(71)**Name of Applicant :**
1)QUALCOMM INCORPORATED
Address of Applicant :Attn: International IP Administration 5775 Morehouse Drive San Diego California 92121-1714 USA U.S.A.
(72)**Name of Inventor :**
1)HORN Gavin Bernard
2)GRIOT Miguel
3)SUBRAMANIAN Ramachandran

(57) Abstract :
Managing packet data network (PDN) connectivity for a device. PDN connectivity to a local gateway L-GW can be managed at an access point with which the device is communicating based at least in part on received PDN connectivity parameters, (e.g. list of Access Point Names, APNs, list of Closed Subscriber Groups, CSGs, indication on whether Local Internet Protocoi Access, LIPA, or selected IP Traffic Offload, SIPTO, is aliowed, etc). The PDN connectivity parameters can include access points, related closed subscriber groups, public land mobile networks, etc., from which a device (MME) can request a PDN connection. The PDN connectivity parameters can be specific for the device and/or for one or more access point names. In addition, a subscription server or other core network device can communicate the PDN connectivity parameters to the device and/or the device can receive PDN connectivity parameters as a result of a failed PDN connection attempt to an access point.

No. of Pages : 70 No. of Claims : 63

(12) PATENT APPLICATION PUBLICATION
(19) INDIA
(22) Date of filing of Application :31/12/2012
(21) Application No.10906/CHENP/2012 A
(43) Publication Date : 25/12/2015

(54) Title of the invention : METHOD AND APPARATUS FOR SAVING POWER BY USING SIGNAL FIELD OF PREAMBLE •

(51) International classification :H04L 1/00
(31) Priority Document No :61/365,126
(32) Priority Date :16/07/2010
(33) Name of priority country :U.S.A.
(86) International Application No :PCT/US2011/044272
Filing Date :15/07/2011
(87) International Publication No : NA
(61) Patent of Addition to Application Number :NA
Filing Date :NA
(62) Divisional to Application Number :NA
Filing Date :NA

(71)**Name of Applicant :**
1)QUALCOMM INCORPORATED
Address of Applicant :Attn: International IP Administration 5775 Morehouse Drive San Diego California 92121-1714 United States of America U.S.A.
(72)**Name of Inventor :**
1)ABRAHAM Santosh Paul
2)SAMPATH Hemanth
3)VERMANI Sameer

(57) Abstract :
Certain aspects of the present disclosure relate to a technique for power saving at mobile stations in Very High Throughput (VHT) systems using signal field bits of a preamble with a limited transmission overhead. The present disclosure proposes a method of indicating to a destination through a preamble cyclic redundancy check (CRC) checksum that the destination may be the intended destination of a transmission packet. The present disclosure also proposes a method of indicating to a destination through a preamble CRC that the destination may not be the intended destination of a transmission packet. In this case decoding of the received packet can be terminated in order to save power at a receiving device. [Figure 6A]

No. of Pages : 43 No. of Claims : 49

(12) PATENT APPLICATION PUBLICATION
(19) INDIA
(22) Date of filing of Application :14/12/2012

(21) Application No.10452/CHENP/2012 A
(43) Publication Date : 25/12/2015

(54) Title of the invention : MEDIA PRESENTATION DESCRIPTION DELTA FILE FOR HTTP STREAMING

(51) International classification	:H04L 29/06 , H04L 29/08
(31) Priority Document No	:12/815,269
(32) Priority Date	:14/06/2010
(33) Name of priority country	:U.S.A.
(86) International Application No	:PCT/US2011/039910
Filing Date	:10/06/2011
(87) International Publication No	: NA
(61) Patent of Addition to Application Number	:NA
Filing Date	:NA
(62) Divisional to Application Number	:NA
Filing Date	:NA

(71)**Name of Applicant :**
1)RESEARCH IN MOTION LIMITED
Address of Applicant :295 Phillip Street Waterloo Ontario N2L 3W8 Canada Canada
(72)**Name of Inventor :**
1)FURBECK David Stuart
2)CHITTURI Suresh

(57) Abstract :
A method for obtaining media presentation description information. The method includes a client obtaining information related to a change in a first Media Presentation Description (MPD) on a server. The method further includes the client updating a second MPD on the client with the information related to the change.

No. of Pages : 27 No. of Claims : 28

(12) PATENT APPLICATION PUBLICATION
(21) Application No.10455/CHENP/2012 A
(19) INDIA
(22) Date of filing of Application :14/12/2012
(43) Publication Date : 25/12/2015

(54) Title of the invention : IMAGE DATA TRANSMITTING DEVICE CONTROL METHOD FOR IMAGE DATA TRANSMITTING DEVICE IMAGE DATA TRANSMITTING METHOD AND IMAGE DATA RECEIVING DEVICE •

(51) International classification	:H04N 13/00 , H04N 7/173
(31) Priority Document No	:P2010-142995
(32) Priority Date	:23/06/2010
(33) Name of priority country	:Japan
(86) International Application No	:PCT/JP2011/062853
Filing Date	:03/06/2011
(87) International Publication No	: NA
(61) Patent of Addition to Application Number	:NA
Filing Date	:NA
(62) Divisional to Application Number	:NA
Filing Date	:NA

(71)**Name of Applicant :**
1)SONY CORPORATION
Address of Applicant :1-7-1 Konan Minato-ku Tokyo 1080075 Japan
(72)**Name of Inventor :**
1)IKUO TSUKAGOSHI

(57) Abstract :
ABSTRACT To suppress a problem occurring in three-dimensional image display due to picture frame conversion processing for reducing black belt data regions corresponding to side panels and letterboxes. A set top box (STB) 200 receives three-dimensional image data transmitted from a broadcast station 100 over a broadcast wave, and transmits the three-dimensional image data via an HDMI cable 400 to a television receiver 300. The STB 200 has a function of picture frame conversion processing for reducing black belt data regions corresponding to side panels and letterboxes. The STB 200 performs the picture frame conversion processing in response to users operation or automatically. When a problem occurs in three-dimensional image display due to the picture frame conversion processing, the STB 200 does not perform the picture frame conversion processing. When a transmission method of the received image data is either a side-by-side method or a top-and-bottom method, the STB 200 further determines non-execution of the picture frame conversion processing in response to a request given from a television receiver.

No. of Pages : 112 No. of Claims : 20

(12) PATENT APPLICATION PUBLICATION
(19) INDIA
(22) Date of filing of Application :14/12/2012
(21) Application No.10456/CHENP/2012 A
(43) Publication Date : 25/12/2015

(54) Title of the invention : ANTI-FLOW DEVICE FOR AN INTRAVENOUS SET

(51) International classification	:A61M 5/168 , A61M 39/08 , A61M 39/28
(31) Priority Document No	:12/828,048
(32) Priority Date	:30/06/2010
(33) Name of priority country	:U.S.A.
(86) International Application No	:PCT/US2011/034862
Filing Date	:02/05/2011
(87) International Publication No	: NA
(61) Patent of Addition to Application Number	:NA
Filing Date	:NA
(62) Divisional to Application Number	:NA
Filing Date	:NA

(71)**Name of Applicant :**
1)CAREFUSION 303 INC.
Address of Applicant :3750 Torrey View Court San Diego California 92130 United States of America U.S.A.
(72)**Name of Inventor :**
1)BROWN Houston
2)PECSAR Rob

(57) Abstract :
A device for holding an IV tube in a pumping apparatus and for selectively occluding the tube when the door of the pumping apparatus is opened to prevent free flow of fluid in the tube. A flange provided on a sliding clamp is designed to prevent inadvertent finger slippage causing pushing of a tab positioned in the sliding direction from the flange resulting in undesirable fluid leakage. The flange is made slip-resistant using a textured surface having a concave shape or having an angled top portion to prevent finger slippage or having a concave setback to guide a finger when pushing the sliding clamp. FIG. 3

No. of Pages : 29 No. of Claims : 20

(12) PATENT APPLICATION PUBLICATION
(19) INDIA
(22) Date of filing of Application :14/12/2012
(21) Application No.10459/CHENP/2012 A
(43) Publication Date : 25/12/2015

(54) Title of the invention : SYSTEM AND METHOD FOR SUBSCRIPTION DATA OPTIMIZATION

(51) International classification :H04W 8/00
(31) Priority Document No :NA
(32) Priority Date :NA
(33) Name of priority country :NA
(86) International Application No :PCT/CN2010/074582
Filing Date :28/06/2010
(87) International Publication No : NA
(61) Patent of Addition to Application Number :NA
Filing Date :NA
(62) Divisional to Application Number :NA
Filing Date :NA

(71)**Name of Applicant :**
1)QUALCOMM Incorporated
Address of Applicant :Attn: International IP Administration 5775 Morehouse Drive San Diego California 92121-1714 USA U.S.A.
(72)**Name of Inventor :**
1)ZHU Xipeng
2)PANDIT Krishna S.
3)STUPAR Patrick
4)GRANZOW Wolfgang

(57) Abstract :
Devices and methods are provided for subscription data optimization in a wireless communication system. In one embodiment the method may involve receiving an update location request from a mobile entity and forwarding the update location request to a subscriber data repository. The method may involve receiving a profile identifier from the subscriber data repository the profile identifier corresponding to profile parameters for a subscription service for the mobile entity. The method may also involve accessing a lookup table to determine the profile parameters associated with the profile identifier and determining whether to authorize the subscription service based at least in part on the profile parameters.

No. of Pages : 47 No. of Claims : 69

(12) PATENT APPLICATION PUBLICATION
(19) INDIA
(22) Date of filing of Application :31/12/2012
(21) Application No.10945/CHENP/2012 A
(43) Publication Date : 25/12/2015

(54) Title of the invention : METHOD DEVICE AND SYSTEM FOR PERFORMING ASSIGNMENT FOR A CALL

(51) International classification :H04W
(31) Priority Document No :201010218682.5
(32) Priority Date :30/06/2010
(33) Name of priority country :China
(86) International Application No :PCT/CN2011/075186
Filing Date :02/06/2011
(87) International Publication No : NA
(61) Patent of Addition to Application Number :NA
Filing Date :NA
(62) Divisional to Application Number :NA
Filing Date :NA

(71)**Name of Applicant :**
1)HUAWEI TECHNOLOGIES CO. LTD.
Address of Applicant :Huawei Administration Building Bantian Longgang District Shenzhen Guangdong 518129 P. R. China China
(72)**Name of Inventor :**
1)XU Binbin

(57) Abstract :
The present invention discloses a method, a device, and a system for performing assignment for a call, which relate to the field of wireless communications. The method includes: when a user initiates a call, assigning, by a system side, a target bearer for the call from bearers in a multibearer network with overlapping coverage according to a load of each of the bearers or a service type of the call, and obtaining an identifier of the target bearer; determining one or multiple target base station according to the identifier of the target bearer and an identifier of a base station through which the user initiates the call, where the coverage of the target bearer of the target base station overlaps with the coverage of a bearer of the base station through which the user initiates the call, and obtaining identifier of the target base station; and sending the identifier of the target bearer and the identifier of the target base station to the user. The device includes an assignment module, an obtaining module, and a sending module. In a scenario of a non co-sited network with overlapping coverage, the present invention is capable of assigning a target bearer for a call from bearers in the network and improving the success rate of the assignment.

No. of Pages : 35 No. of Claims : 10

(12) PATENT APPLICATION PUBLICATION
(19) INDIA
(22) Date of filing of Application :10/12/2012
(21) Application No.10290/CHENP/2012 A
(43) Publication Date : 25/12/2015

(54) Title of the invention : NETWORK SHARING IN AN EVOLVED PACKET CORE NETWORK •

(51) International classification :H04W 72/08
(31) Priority Document No :NA
(32) Priority Date :NA
(33) Name of priority country :NA
(86) International Application No :PCT/EP2010/059506
Filing Date :02/07/2010
(87) International Publication No : NA
(61) Patent of Addition to Application Number :NA
Filing Date :NA
(62) Divisional to Application Number :NA
Filing Date :NA

(71)**Name of Applicant :**
1)TELEFONAKTIEBOLAGET LM ERICSSON (PUBL)
Address of Applicant :SE-164 83 Stockholm Sweden Sweden
(72)**Name of Inventor :**
1)TUR • NYI Zolt¡n Rich¡rd
2)ERIKSSON Hans
3)GOLDBECK-L–WE Tomas

(57) Abstract :
One aspect pertains to a method of enabling an Evolved Packet Core (EPC) network to implement predetermined Qulaity of Service (QoS) resource policies applied to subscriber/service groups operating via the network. The method comprises receiving a request for QoS resources to be provided to a bearer for traffic of a user of a subscriber/service group from which the request originated. A Resource Class (RC) parameter is assigned to the request. The RC parameter identifies a resource partition and the originating subscriber/service group. A Gx-Request that includes the RC parameter is forwarded to the EPC network to invoke application of the requested QoS resources so as to establish a bearer in accordance with the predetermined policies identifiable from the RC. Other aspects pertain to EPC network nodes configured accordingly.

No. of Pages : 21 No. of Claims : 17

(12) PATENT APPLICATION PUBLICATION
(19) INDIA
(22) Date of filing of Application :10/12/2012
(21) Application No.10292/CHENP/2012 A
(43) Publication Date : 25/12/2015

(54) Title of the invention : DEVICE SYSTEM AND METHOD FOR APPLYING AT LEAST ONE APPLICATION AGENT TO HAIR

(51) International classification :A45D19/02,A45D24/28
(31) Priority Document No :10 2010 022 471.5
(32) Priority Date :02/06/2010
(33) Name of priority country :Germany
(86) International Application No :PCT/EP2011/002713
Filing Date :01/06/2011
(87) International Publication No :WO 2011/151067 A1
(61) Patent of Addition to Application Number :NA
Filing Date :NA
(62) Divisional to Application Number :NA
Filing Date :NA

(71)**Name of Applicant :**
1)WAGNER Anke
Address of Applicant :Bugostrae 1 88682 Salem Germany
(72)**Name of Inventor :**
1)WAGNER Anke
2)EICHE Daniel
3)ROTH Peter
4)MEHLBERGER Andreas
5)MEHLBERGER Michael

(57) Abstract :
The invention relates to a device for applying at least one application agent to hair comprising a housing unit (11a; 11b; 11c) which at least partially encloses at least one depot volume (12a; 12b; 12c) for accommodating at least one component of the at least one application agent (10a; 10b; 10c). According to the invention the device comprises a dispenser unit (13a; 13b; 13c) which is designed to discharge the at least one component of the application agent (10a; 10b; 10c) from an application agent container (14a; 14b; 14c) that is at least partially inserted into the depot volume (12a; 12b; 12c).

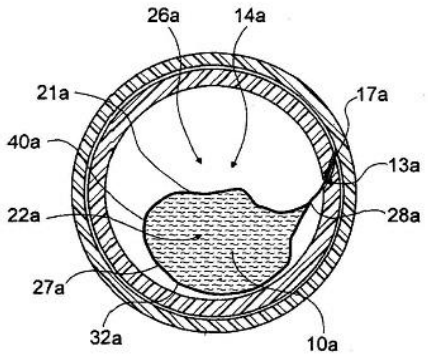

Fig. 2

No. of Pages : 31 No. of Claims : 16

(12) PATENT APPLICATION PUBLICATION
(19) INDIA
(22) Date of filing of Application :10/12/2012

(21) Application No.10296/CHENP/2012 A
(43) Publication Date : 25/12/2015

(54) Title of the invention : CELL PENETRATING PEPTIDES AND USES THEROF

(51) International classification :A61K47/48,C07K14/00
(31) Priority Document No :10165793.0
(32) Priority Date :14/06/2010
(33) Name of priority country :EPO
(86) International Application No :PCT/EP2011/059853
Filing Date :14/06/2011
(87) International Publication No :WO 2011/157713
(61) Patent of Addition to Application Number :NA
Filing Date :NA
(62) Divisional to Application Number :NA
Filing Date :NA

(71)**Name of Applicant :**
1)F. HOFFMANN LA ROCHE AG
Address of Applicant :Grenzacherstr. 124 CH 4070 Basel Switzerland
(72)**Name of Inventor :**
1)BRINKMANN Ulrich
2)HAAS Alexander
3)MAISEL Daniela

(57) Abstract :
The present invention relates to a peptide molecule capable of being internalized into a cell wherein the peptide molecule (a) has a length of at least 10 preferably of at least 15 amino acid residues; (b) comprises in its primary amino acid sequence at least 25% preferably at least 30% positively charged amino acid residues; and (c) is internalized into a cell with an efficacy being at least 80% preferably at least 90% of the internalization efficacy of the TAT peptide having the amino acid sequence GRKKRRQRRRPPQ. The invention is also directed to a corresponding nucleic acid molecule encoding such peptide as well as to a composition comprising at least one such peptide being attached to any one of the group consisting of one or more nucleic acid molecules one or more peptides or proteins one or more small molecules and one or more nanoparticles wherein the attachment is accomplished by a linkage selected from the group consisting of a covalent linkage and a non covalent linkage. Furthermore the invention relates to a method of detecting the internalization behavior of such peptide or such composition comprising (a) administering the peptide or composition to one or more cells; and (b) detecting the internalization of the peptide or composition. Finally the invention concerns the use of such peptide or such composition for the transformation or transfection of one or more cells as well as in the prevention and/or treatment of a condition selected from the group consisting of cancer immune diseases cardiovascular diseases neuronal diseases infections and inflammatory diseases.

Fig. 1

No. of Pages : 112 No. of Claims : 18

(12) PATENT APPLICATION PUBLICATION
(19) INDIA
(22) Date of filing of Application :06/03/2014
(21) Application No.1138/CHE/2014 A
(43) Publication Date : 25/12/2015

(54) Title of the invention : A METHOD FOR THE SYNTHESIS OF POLYOLS AND DERIVATIVES THEREOF

(51) International classification :C07D
(31) Priority Document No :NA
(32) Priority Date :NA
(33) Name of priority country :NA
(86) International Application No :NA
Filing Date :NA
(87) International Publication No : NA
(61) Patent of Addition to Application Number :NA
Filing Date :NA
(62) Divisional to Application Number :NA
Filing Date :NA

(71)**Name of Applicant :**
1)INDIAN INSTITUTE OF SCIENCE EDUCATION AND RESEARCH, THIRUVANANTHAPURAM (IISER-TVM)
Address of Applicant :Computer Science Building, College of Engineering Trivandrum Campus, Trivandrum-695016 Kerala, India Karnataka India
(72)**Name of Inventor :**
1)KANA MEETHALEVEETIL SURESHAN
2)RAJA MOHANRAO

(57) Abstract :
A process for the preparation of a polyol comprising the steps of; oxidizing a hydroxy group of a polyol to ketone in presence of an oxidizing agent, said hydroxy group is preferably adjacent to a trans-ketal of the said polyol to obtain keto trans ketal; isolating and epimerizing the said keto trans-ketal to keto cis-ketal through enolisation in presence of a base; reducing said keto cis-ketal using a reducing agent to obtain hydroxy cis-ketal/polyol by allowing stereo chemical inversion.

No. of Pages : 37 No. of Claims : 10

(12) PATENT APPLICATION PUBLICATION
(19) INDIA
(22) Date of filing of Application :11/12/2012
(21) Application No.10351/CHENP/2012 A
(43) Publication Date : 25/12/2015

(54) Title of the invention : METHOD AND APPARATUS FOR REFRESHING KEY

(51) International classification :H04W 36/08, H04W 12/04 , H04W 36/30
(31) Priority Document No :201010201575.1
(32) Priority Date :10/06/2010
(33) Name of priority country :China
(86) International Application No :PCT/CN2011/075266
Filing Date :03/06/2011
(87) International Publication No : NA
(61) Patent of Addition to Application Number :NA
Filing Date :NA
(62) Divisional to Application Number :NA
Filing Date :NA

(71)**Name of Applicant :**
1)HUAWEI TECHNOLOGIES CO. LTD.
Address of Applicant :Huawei Administration Building Bantian Longgang Shenzhen Guangdong 518129 P.R. China China
(72)**Name of Inventor :**
1)CHAI Li

(57) Abstract :
A method for refreshing a key is provided by the present invention, wherein when a counter in a Packet Data Convergence Protocol PDCP layer of a Radio Bearer RB reaches a threshold, a mobile device receives a cell handover message, re-establishes PDCP layers and Radio Link Control RLC layers for all RBs, keeps Uplink Time Alignment Information, uplink grant resources for uplink shared channel and Physical Uplink Control Channel resources allocated semi-statically, and Hushes a buffer of a Medium Access Control MAC layer; the mobile device obtains a new root key, and obtains a new encryption and integrity protection key of a radio resource control plane according to the new root key; the mobile device transmits a cell handover complete message protected by the new encryption and integrity protection key. Thereby, a random access process initiated by the mobile device is avoided and interruption delay caused by the random access initiated by the mobile device is thus avoided. A mobile device and a network node are also provided by the present invention.

No. of Pages : 30 No. of Claims : 31

(12) PATENT APPLICATION PUBLICATION
(19) INDIA
(22) Date of filing of Application :12/12/2012
(21) Application No.10352/CHENP/2012 A
(43) Publication Date : 25/12/2015

(54) Title of the invention : SYSTEMS AND METHODS FOR UNINTERRUPTIBLE POWER SUPPLY CONTROL

(51) International classification	:H02J 9/00 , H02M 7/493
(31) Priority Document No	:12/780,349
(32) Priority Date	:14/05/2010
(33) Name of priority country	:U.S.A.
(86) International Application No	:PCT/US2011/036186
Filing Date	:12/05/2011
(87) International Publication No	: NA
(61) Patent of Addition to Application Number	:NA
Filing Date	:NA
(62) Divisional to Application Number	:NA
Filing Date	:NA

(71)**Name of Applicant :**
1)AMERICAN POWER CONVERSION CORPORATION
Address of Applicant :132 Fairgrounds Road West Kingston RI 02892 United States of America. U.S.A.
(72)**Name of Inventor :**
1)GHOSH Rajesh
2)AGRAWAL Mahima
3)THALLI Pradeep
4)KLIKIC Damir

(57) Abstract :
Systems and methods of operating uninterruptible power supplies in parallel in a power distribution system to provide power to a load are provided. At least one uninterruptible power supply inverter provides power to the load. A communication interface provides a measured value of at least one of inverter output current of a first uninterruptible power supply and a measured value of the load current to a second uninterruptible power supply, and receives a measured value of at least one of inverter output current of the second uninterruptible power supply and the load current. A controller controls the uninterruptible power supplies to operate in one of a master state and a slave state. In the master state the uninterruptible power supply is configured to control the voltage to the load, and in the slave state the uninterruptible power supply is configured to determine a reference output current value based at least in part on at least one of the measured value of inverter output current of the second uninterruptible power supply and the measured value of the load current. The uninterruptible power supply in the slave state drives its inverter output current toward the reference output current value to provide its share of the load current.

No. of Pages : 49 No. of Claims : 19

(12) PATENT APPLICATION PUBLICATION
(19) INDIA
(22) Date of filing of Application :12/12/2012
(21) Application No.10354/CHENP/2012 A
(43) Publication Date : 25/12/2015

(54) Title of the invention : EMULSIONS OF POLYISOBUTENES, SUBSTANCE AND PROCESS

(51) International classification :C08L23/22
(31) Priority Document No :61/333,786
(32) Priority Date :12/05/2010
(33) Name of priority country :U.S.A.
(86) International Application No :PCT/EP2011/057586
Filing Date :11/05/2011
(87) International Publication No :WO 2011/141496 A1
(61) Patent of Addition to Application Number :NA
Filing Date :NA
(62) Divisional to Application Number :10276/CHENP/2012
Filed on :07/12/2012

(71)**Name of Applicant :**
1)BASF SE
Address of Applicant :67056 LUDWIGSHAFEN Germany
(72)**Name of Inventor :**
1)BOECKH, DIETER
2)MUHLBACH, KLAUS
3)BRYM, MARKUS
4)EBERT, SOPHIA
5)GARCIA CASTRO, IVETTE
6)TINSLEY, JACK
7)DOBRAWA, RAINER
8)CEPUS, VALENTIN
9)PANANDIKER, RAJAN K.
10)MENKHAUS, JULIE
11)HUELSKOETTER, FRANK

(57) Abstract :
The present invention is directed to stable emulsions comprising polyolefines, in particular polyisobutene, the process to obtain said emulsions and the use of said emulsions.

No. of Pages : 39 No. of Claims : 10

(12) PATENT APPLICATION PUBLICATION
(21) Application No.1220/CHE/2014 A
(19) INDIA
(22) Date of filing of Application :10/03/2014
(43) Publication Date : 25/12/2015

(54) Title of the invention : EFFLUENT TREATMENT, SEWERAGE TREATMENT AND DESALINIATION USING NANO CARBON MATERIALS

(51) International classification :C02F1/00
(31) Priority Document No :NA
(32) Priority Date :NA
(33) Name of priority country :NA
(86) International Application No :NA
Filing Date :NA
(87) International Publication No : NA
(61) Patent of Addition to Application Number :NA
Filing Date :NA
(62) Divisional to Application Number :NA
Filing Date :NA

(71)**Name of Applicant :**
1)EESAVYASA TECHNOLOGIES PVT. LTD.
Address of Applicant :PLOT NO: 79, PHASE-III, SVCIE, BALANAGAR, HYDERABAD, R.R. DISTRICT - 500 037 Andhra Pradesh India
(72)**Name of Inventor :**
1)D.P. CHAKRAVARTHY
2)BANDA RAVI SANKAR

(57) Abstract :
In this method of invention graphene nano particles fused with different types of alumino silicates, sand and other zeolite type of materials used as raw material to produce a media that does not allow no other material other than pure water to filter through it. The preparation of graphene material from agro based inexpensive resources and fusing the same with chosen zeolite mixtures and making perforations of molecular level sieves is an important step involved. This material when used as filtration media layered on biodegradable plastic frames, ETP, STP, desalination needs can be addressed in low cost methods

No. of Pages : 7 No. of Claims : 5

(12) PATENT APPLICATION PUBLICATION
(19) INDIA
(22) Date of filing of Application :31/12/2012
(21) Application No.10946/CHENP/2012 A
(43) Publication Date : 25/12/2015

(54) Title of the invention : METHOD AND APPARATUS FOR NETWORK-FRIENDLY COLLABORATIVE CACHING

(51) International classification :G06F
(31) Priority Document No :61/361,262
(32) Priority Date :02/07/2010
(33) Name of priority country :U.S.A.
(86) International Application No :PCT/CN2011/073674
Filing Date :05/05/2011
(87) International Publication No : NA
(61) Patent of Addition to Application Number :NA
Filing Date :NA
(62) Divisional to Application Number :NA
Filing Date :NA

(71)**Name of Applicant :**
1)HUAWEI TECHNOLOGIES CO. LTD.
Address of Applicant :Huawei Administration Building Bantian Longgang District Shenzhen Guangdong 518129 P.R. China China
(72)**Name of Inventor :**
1)XIE Haiyong
2)SHI Guangyu
3)WANG Guoqiang
4)WANG Pengwei

(57) Abstract :
An apparatus comprising a first content oriented network architecture (CONA) node configured to couple to at least one second CONA nodes and implement collaborative caching in accordance with criteria comprising at least one content caching objective and at least one network operational objective, wherein the content caching objectives are in accordance with the network operational objectives. Also disclosed is a network component comprising a caching policy engine configured to receive network policy information and compute a caching policy in accordance with the network policy information, an inter-cache data transfer component coupled to the caching policy engine and configured to fetch a plurality of content object portions in accordance with the caching policy, a storage engine coupled to the inter-cache data transfer component and configured to cache the content object portions, and an eviction algorithm component coupled to the storage engine and configured to determine which, if any, of the cached content object portions are to be evicted.

No. of Pages : 51 No. of Claims : 22

(12) PATENT APPLICATION PUBLICATION
(21) Application No.10947/CHENP/2012 A
(19) INDIA
(22) Date of filing of Application :31/12/2012
(43) Publication Date : 25/12/2015

(54) Title of the invention : SIMULATED HARDWARE BUTTON OPERATION METHOD AND TOUCH SCREEN TERMINAL

(51) International classification :G06F
(31) Priority Document No :201010533412.3
(32) Priority Date :05/11/2010
(33) Name of priority country :China
(86) International Application No :PCT/CN2011/081460
Filing Date :28/10/2011
(87) International Publication No : NA
(61) Patent of Addition to Application Number :NA
Filing Date :NA
(62) Divisional to Application Number :NA
Filing Date :NA

(71)**Name of Applicant :**
1)Huawei Device Co. Ltd.
Address of Applicant :Building B2 Huawei Industrial Base Bantian Longgang District Shenzhen 518129 P.R. China China
(72)**Name of Inventor :**
1)TONG Deli

(57) Abstract :
Disclosed are a simulation hardware button operation method and a touch screen terminal, applied to the technical field of electronic information. In the touch screen terminal, the network node (121) of at least one pixel in the upper boundary region of a touch screen (110) is arranged on the inner side surface of the terminal housing outside of the touch screen (110), and when a detection reporting unit (20) detects a touch sensing unit (10) sensing through the network node (120) an user operating the touch button of the terminal, the detection reporting unit (20) reports the corresponding pixel information of the sensed network node; an operation confirmation unit (30) confirms the function of the operation to the touch button by the user according to the report of the detection reporting unit (10). Thus the location of the simulation hardware button of the touch screen terminal is not restricted and can be flexibly arranged at any location on the housing of the terminal outside of the touch screen, and furthermore, a dedicated non-displaying touch area is not needed to concentrate the arrangement of simulated hardware buttons.

No. of Pages : 25 No. of Claims : 17

(12) PATENT APPLICATION PUBLICATION
(19) INDIA
(22) Date of filing of Application :13/02/2014
(21) Application No.1162/CHENP/2014 A
(43) Publication Date : 25/12/2015

(54) Title of the invention : DOWNHOLE TOOL FOR DETERMINING FLOW VELOCITY

(51) International classification :D06B
(31) Priority Document No :11187276.8
(32) Priority Date :31/10/2011
(33) Name of priority country :EPO
(86) International Application No :PCT/EP2012/074473
Filing Date :05/12/2012
(87) International Publication No :WO 2014/086406
(61) Patent of Addition to Application Number :NA
Filing Date :NA
(62) Divisional to Application Number :NA
Filing Date :NA

(71)**Name of Applicant :**
1)WELLTEC A/S
Address of Applicant :GYDEVANG 25, DK-3450 ALLEROD Denmark
(72)**Name of Inventor :**
1)HALLUNDBEK, JORGEN
2)KJERSGAARD-RASMUSSEN, JIMMY

(57) Abstract :
Methods and apparatus for the rapid formation of composite components.A method of fabricating a composite component, comprising the steps of positioning an uncured composite component between two mould parts; heating the component to a temperature in the range of 150 - 250°C; and applying a pressure in excess of 5MPa to the component, wherein the pressure is increased over a period of 200 to 450ms.

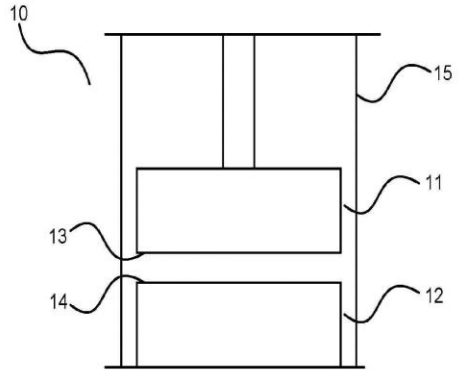

Figure 1

No. of Pages : 30 No. of Claims : 17

(12) PATENT APPLICATION PUBLICATION
(21) Application No.1224/CHE/2014 A
(19) INDIA
(22) Date of filing of Application :10/03/2014
(43) Publication Date : 25/12/2015

(54) Title of the invention : SUPER CAPICTOR SYNTHESIS USING NANO CARBON MATERIALS

(51) International classification :H01L
(31) Priority Document No :NA
(32) Priority Date :NA
(33) Name of priority country :NA
(86) International Application No :NA
Filing Date :NA
(87) International Publication No : NA
(61) Patent of Addition to Application Number :NA
Filing Date :NA
(62) Divisional to Application Number :NA
Filing Date :NA

(71)**Name of Applicant :**
1)EESAVYASA TECHNOLOGIES PVT. LTD.
Address of Applicant :PLOT NO: 79, PHASE-III, SVCIE, BALANAGAR, HYDERABAD, R.R. DISTRICT - 500 037 Andhra Pradesh India
(72)**Name of Inventor :**
1)D.P. CHAKRAVARTHY
2)BANDA RAVI SANKAR

(57) Abstract :
In this method of synthesis, graphene nano particles are doped with other nano particles like platinum, tantalum, halfnium and other rare earth elements using ultra pure water as dielectric medium. The preparation of such composites and the method to produce nano particles of tantalum, tungsten using electron beam ablation methods are the novel concept in the proposal. Using pure water as a material with high dielectric constant between multi wall carbon nano tube layers will enable to decrease the size of super capacitor and increases the current storage ability to reach capacities that are ten thousand times more compared to normal electrolytic capacitors.

No. of Pages : 7 No. of Claims : 5

(12) PATENT APPLICATION PUBLICATION
(19) INDIA
(22) Date of filing of Application :28/12/2012
(21) Application No.10863/CHENP/2012 A
(43) Publication Date : 25/12/2015

(54) Title of the invention : METHOD AND APPARATUS FOR HANDOVER OF DEVICE TO MITIGATE UPLINK INTERFERENCE IN FEMTOCELL DEPLOYMENTS

(51) International classification :H04W
(31) Priority Document No :61/367,782
(32) Priority Date :26/07/2010
(33) Name of priority country :U.S.A.
(86) International Application No :PCT/US2011/045426
Filing Date :26/07/2011
(87) International Publication No : NA
(61) Patent of Addition to Application Number :NA
Filing Date :NA
(62) Divisional to Application Number :NA
Filing Date :NA

(71)**Name of Applicant :**
1)QUALCOMM Incorporated
Address of Applicant :Attn: International IP Administration 5775 Morehouse Drive San Diego California 92121-1714 USA U.S.A.
(72)**Name of Inventor :**
1)YAVUZ Mehmet
2)MESHKATI Farhad
3)NAGARAJA Sumeeth
4)ZHOU Yan
5)CHANDE Vinay

(57) Abstract :
Methods and apparatuses are provided for determining whether to handover a device to mitigate uplink interference while achieving acceptable uplink service quality in a wireless network. One or more parameters related to a device can be evaluated to determine whether to handover the device such as a number of transmission power reports received from the device over a period of time a frame error rate setpoint or power control commands related to the uplink of the device a received pilot signal strength at the device an uplink throughput or buffer size at the device etc. from which transmit power information of the device can be inferred for determining whether the device potentially interferes with access points or devices. Based on the one or more parameters an access point can determine whether handing over the device may mitigate such uplink interference while ensuring uplink service quality and accordingly handover the device.

No. of Pages : 51 No. of Claims : 40

(12) PATENT APPLICATION PUBLICATION
(21) Application No.10864/CHENP/2012 A
(19) INDIA
(22) Date of filing of Application :28/12/2012
(43) Publication Date : 25/12/2015

(54) Title of the invention : APPARATUS AND METHOD FOR ENFORCEMENT OF MULTIPLE PACKET DATA NETWORK (PDN) CONNECTIONS TO THE SAME ACCESS POINT NAME (APN)

(51) International classification :H04W 76/02
(31) Priority Document No :61/363,939
(32) Priority Date :13/07/2010
(33) Name of priority country :U.S.A.
(86) International Application No :PCT/US2011/043919
Filing Date :13/07/2011
(87) International Publication No : NA
(61) Patent of Addition to Application Number :NA
Filing Date :NA
(62) Divisional to Application Number :NA
Filing Date :NA

(71)**Name of Applicant :**
1)QUALCOMM Incorporated
Address of Applicant :Attn: International IP Administration 5775 Morehouse Drive San Diego California 92121-1714 USA U.S.A.
(72)**Name of Inventor :**
1)GIARETTA Gerardo

(57) Abstract :
An apparatus and method for enforcement of multiple packet data network (PDN) connections to a same access point name (APN) in a wireless communication system including receiving a message from a mobile device related to a first packet data network (PDN) connection to a first APN; and associating the first PDN connection related to the mobile device with a radio connection between the mobile device and an access point in response to the message. In one example the apparatus and method further includes determining if the mobile device utilizes at least one additional radio connection with the access point to communicate over at least one additional PDN connection to the first APN.

No. of Pages : 51 No. of Claims : 43

(12) PATENT APPLICATION PUBLICATION
(19) INDIA
(22) Date of filing of Application :28/12/2012
(21) Application No.10877/CHENP/2012 A
(43) Publication Date : 25/12/2015

(54) Title of the invention : ORODISPERSIBLE TABLETS OF ERYTHRITOL AND ISOMALT

(51) International classification :A61K9/00,A61K9/20
(31) Priority Document No :10005677.9
(32) Priority Date :01/06/2010
(33) Name of priority country :EPO
(86) International Application No :PCT/EP2011/002432
Filing Date :17/05/2011
(87) International Publication No :WO 2011/151018
(61) Patent of Addition to Application Number :NA
Filing Date :NA
(62) Divisional to Application Number :NA
Filing Date :NA

(71)**Name of Applicant :**
1)CARGILL INCORPORATED
Address of Applicant :15407 McGinty Road W. Wayzata Minnesota 55391 U.S.A.
(72)**Name of Inventor :**
1)BOGHMANS Catherine Patricia L.
2)MEEUS Liesbeth Maria Fernande

(57) Abstract :
Erythritol is granulated together with at least 10% w/w isomalt. Prior and/or after granulation a disintegrant is added and orodispersible tablets are prepared. The tablet has a disintegration time of less than 100 seconds less than 90 seconds preferably less than 80 seconds more preferably less than 60 seconds and said disintegration time was determined according to the European Pharmacopoeia VI Test method 2.9.1 by using a pharmaceutical disintegration tester model ZT 73 whereby 6 tablets having a surface of 1 square centimeter and a weight of 350 mg at a compression force of 20 kN were analyzed and mean values were calculated. The process for preparing the orodispersible tablet its use and the intermediate granulate are described as well.

No. of Pages : 15 No. of Claims : 11

(12) PATENT APPLICATION PUBLICATION
(19) INDIA
(22) Date of filing of Application :24/03/2014

(21) Application No.1534/CHE/2014 A
(43) Publication Date : 25/12/2015

(54) Title of the invention : ANTI THERMAL RUN AWAY BATTERY CHARGER USING VOLTAGE CONTROL METHOD

(51) International classification :H02J
(31) Priority Document No :NA
(32) Priority Date :NA
(33) Name of priority country :NA
(86) International Application No :NA
Filing Date :NA
(87) International Publication No : NA
(61) Patent of Addition to Application Number :NA
Filing Date :NA
(62) Divisional to Application Number :NA
Filing Date :NA

(71)**Name of Applicant :**
1)Ampere Vehicles Pvt Ltd
Address of Applicant :150/1B, Nanthavana Thottam, Kannampalayam,Sulur, Coimbatore 641 402, India Tamil Nadu India
(72)**Name of Inventor :**
1)Pachyappa Baladhandayuthapani
2)Sathiayanathan Karthik

(57) Abstract :
The present invention provides ananti-thermal runaway battery charger that comprises a microcontroller (1) for receiving battery input data and determining a charging stage of abattery based on the input data. A delay circuit introduces a time delay to an input current to generate a delayed current. A control logic unit calculates a rate of current change based on the input currentand delayed currentand generates a control command based on the calculated rate of current change, if the battery enters a float stage. A control feedback unit (2) controls an input voltage of the battery (16)based on the command. The control logic unit generates the command to reduce the voltage based on the rate of current change, if the calculated rate of current change is greater than a threshold value. The charger (10) uses a method for controlling voltage for charging the battery (16).

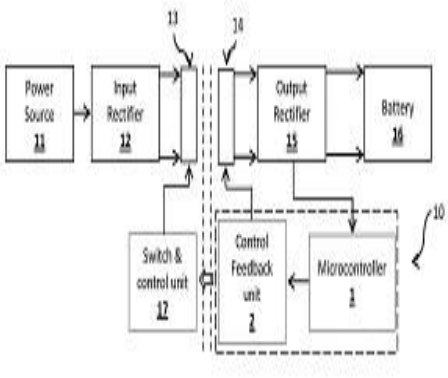

FIG 1

No. of Pages : 15 No. of Claims : 10

(12) PATENT APPLICATION PUBLICATION
(19) INDIA
(22) Date of filing of Application :18/12/2012

(21) Application No.10542/CHENP/2012 A
(43) Publication Date : 25/12/2015

(54) Title of the invention : INSULIN DERIVATIVES CONTAINING ADDITIONAL DISULFIDE BONDS

(51) International classification :A61K
(31) Priority Document No :10167046.1
(32) Priority Date :23/06/2010
(33) Name of priority country :EPO
(86) International Application No :PCT/EP2011/060383
Filing Date :21/06/2011
(87) International Publication No : NA
(61) Patent of Addition to Application Number :NA
Filing Date :NA
(62) Divisional to Application Number :NA
Filing Date :NA

(71)**Name of Applicant :**
1)Novo Nordisk A/S
Address of Applicant :Novo All DK-2880 Bagsv¦rd Denmark Denmark
(72)**Name of Inventor :**
1)MADSEN Peter
2)HUBALEK Frantisek
3)KJELDSEN Thomas B¸rglum
4)LUDVIGSEN Svend

(57) Abstract :
The present invention is related to insulin derivatives containing additional disulfide bonds and methods of making such.

No. of Pages : 98 No. of Claims : 14

(12) PATENT APPLICATION PUBLICATION
(19) INDIA
(22) Date of filing of Application :18/12/2012
(21) Application No.10547/CHENP/2012 A
(43) Publication Date : 25/12/2015

(54) Title of the invention : PART ASSEMBLY METHOD

(51) International classification :B21J5/00,B21K25/00
(31) Priority Document No :1019/10
(32) Priority Date :22/06/2010
(33) Name of priority country :Switzerland
(86) International Application No :PCT/EP2011/060514
Filing Date :22/06/2011
(87) International Publication No :WO 2011/161195 A1
(61) Patent of Addition to Application Number :NA
Filing Date :NA
(62) Divisional to Application Number :NA
Filing Date :NA

(71)**Name of Applicant :**
1)THE SWATCH GROUP RESEARCH AND DEVELOPMENT LTD
Address of Applicant :Rue des Sors 3 CH 2074 Marin Switzerland
(72)**Name of Inventor :**
1)WINKLER Yves
2)BOURBAN Stewes
3)DUBACH Alban

(57) Abstract :
The invention concerns a method of permanent assembly between at least a first part formed of a first material on the one hand, and at least a second part formed of a second materia! on the other hand which is intended to confine said first part in said permanent assembly. The method includes the following steps: - choosing at least said first material or at least said second material which is at least partially amorphous and comprises at least one metallic element; - defining a thermal cycle for said at least one first part by a first increase in temperature gradient followed by a first cooling gradient; - defining a thermal cycle for said at least one second part by a second increase in temperature gradient to ensure an expansion allowing the assembly thereof with said at least one first part, followed by a second cooling gradient for shrinking said second part around said first part to confine said first part; - assembling said at least one second part to said at least one first part, so as to immobilise said first part; - sizing said at least one second part and said at least one first part, and choosing the thermal expansion coefficient of said second material compared to the thermal expansion coefficient of said first material, in order, as appropriate: -obtaining a permanent assembly with said second part clamped over said first part if the product of said thermal expansion coefficient of said second material and said second cooling gradient is higher than the product of said thermal expansion coefficient of said first material and said first cooling gradient; - obtaining a permanent assembly with at least a degree of freedom between said second part and said first part if the product of said thermal expansion coefficient of said second material and said second cooling gradient is lower than the product of said thermal expansion coefficient of said first material and said first cooling gradient. Figure 1

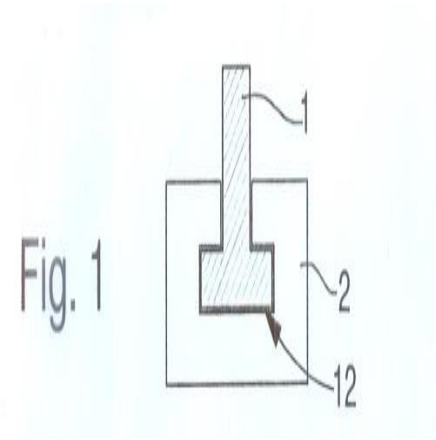

No. of Pages : 24 No. of Claims : 13

(12) PATENT APPLICATION PUBLICATION
(21) Application No.1107/CHENP/2014 A
(19) INDIA
(22) Date of filing of Application :11/02/2014
(43) Publication Date : 25/12/2015

(54) Title of the invention : A GIP PROTEIN AND A POLYNUCLEOTIDE

(51) International classification :C12N15/82(2006.01)
(31) Priority Document No :200610119029.7
(32) Priority Date :04/12/2006
(33) Name of priority country :China
(86) International Application No :PCT/CN2007/71164
Filing Date :04/12/2007
(87) International Publication No :WO2008067759
(61) Patent of Addition to Application Number :NA
Filing Date :NA
(62) Divisional to Application Number :3877/CHENP/2009
Filed on :04/12/2007

(71)**Name of Applicant :**
1)SUZHOU KAIYI BIOTECHNOLOGY CO., LTD.
Address of Applicant :ROOM 140, BUILDING A2, 218 XING-HU ROAD, SUZHOU INDUSTRIAL PARK, SUZHOU, JIANGSU PROVINCE 215 123 China
(72)**Name of Inventor :**
1)CHEN, XIAOYA
2)MAO, YINGBO
3)LIN, ZHIPING
4)WANG, LINGJIAN

(57) Abstract :
The present invention relates to a plant cell, characterized in that said plant cell contains a construct for expressing an insect gene dsRNA, said construct for expressing the insect gene dsRNA is double-stranded, and its sense or antisense strand contains a structure as shown in Formula I: Seq senseXSeCjaniJsense Formula I wherein, Seqsense is a sense sequence or a fragment of an insect gene, wherein said fragment is at least 50 bp long; Seqantisense is a sequence or a fragment complementary to Seqsense, wherein said fragment is at least 50 bp long; X is an intervening sequence between Seqsense and Seqnse, and said intervening sequence is complementary to neither Seq sense 01 Qantisense-

No. of Pages : 37 No. of Claims : 9

(12) PATENT APPLICATION PUBLICATION
(21) Application No.1571/CHENP/2014 A
(19) INDIA
(22) Date of filing of Application :27/02/2014
(43) Publication Date : 25/12/2015

(54) Title of the invention : APPARATUS FOR CLEANING VIEW SCREENS AND LENSES AND METHOD FOR THE USE THEREOF

(51) International classification :B08B1/00,H04B1/40
(31) Priority Document No :61/515752
(32) Priority Date :05/08/2011
(33) Name of priority country :U.S.A.
(86) International Application No :PCT/US2012/049562
Filing Date :03/08/2012
(87) International Publication No :WO 2013/022768
(61) Patent of Addition to Application Number :NA
Filing Date :NA
(62) Divisional to Application Number :NA
Filing Date :NA

(71)**Name of Applicant :**
1)GUI GLOBAL PRODUCTS LTD.
Address of Applicant :1819 St. James Place Houston TX 77056 U.S.A.
(72)**Name of Inventor :**
1)MAYFIELD Walter G.
2)VALDEZ Daniel Martin

(57) Abstract :
A lens and/or a view screen of an electronic device having at least one case can be cleaned by wiping the view screen with a cleaning component wherein the cleaning component is configured to selectively couple to the at least one case or some other substrate using a magnetic attractive force. The cleaning devices may have secondary applications such as securing fly fishing lures activating or deactivating a device having a magnetic switch or preventing sunglasses from sinking. They may also be manufactured without a cleaning component for use with the secondary applications.

FIG. 1A

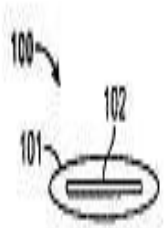

FIG. 1B

No. of Pages : 41 No. of Claims : 28

(12) PATENT APPLICATION PUBLICATION
(19) INDIA
(22) Date of filing of Application :12/03/2014

(21) Application No.1307/CHE/2014 A
(43) Publication Date : 25/12/2015

(54) Title of the invention : METHOD AND SYSTEM FOR PROCESSING A CIRCUIT-SWITCHED (CS) CALL WHILE CAMPED ON A CSG CELL •

(51) International classification :H04W
(31) Priority Document No :NA
(32) Priority Date :NA
(33) Name of priority country :NA
(86) International Application No :NA
Filing Date :NA
(87) International Publication No : NA
(61) Patent of Addition to Application Number :NA
Filing Date :NA
(62) Divisional to Application Number :NA
Filing Date :NA

(71)**Name of Applicant :**
1)Samsung R & D Institute India- Bangalore Private Limited
Address of Applicant :# 2870, Orion Building, Bagmane Constellation Business Park, Outer Ring Road, Doddanekundi Circle, Marathahalli Post, Bangalore-560037 Karnataka India
(72)**Name of Inventor :**
1)Pavan Kumar Devarayanigari
2)Dandra Prasad Basavaraj
3)Vijay Ganesh Surisetty
4)Nitesh Pushpak Shah

(57) Abstract :
Embodiments herein provides a method and system for processing Circuit-Switched (CS) call by User Equipment (UE) while camped on a CSG cell when the manually selected CSG cell is in a Public Land Mobile Network (PLMN) different from a Registered PLMN (RPLMN). The method includes detecting the CS call and processing the CS call in a non-CSG cell belonging to the PLMN of the CSG cell or a different PLMN. The UE stores Evolved Absolute Radio Frequency Channel Number (EARFCN) information, CSG ID, Cell ID while moving out of the CSG Cell to process the CS Call. When the CS call is ended, the UE initiates a search for the CSG Cell on which it was camped earlier using the EARFCN information, Cell ID and CSG ID. If the selected CSG Cell is not available, then the UE initiates search for the stored duplicate value of the RPLMN. FIG. 3

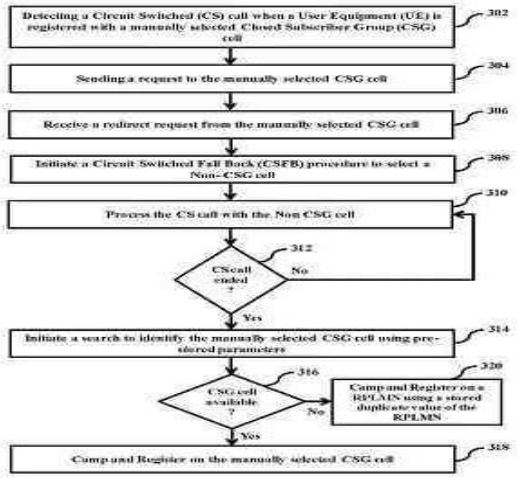

FIG. 3

No. of Pages : 36 No. of Claims : 15

(12) PATENT APPLICATION PUBLICATION
(21) Application No.1441/CHE/2014 A
(19) INDIA
(22) Date of filing of Application :19/03/2014
(43) Publication Date : 25/12/2015

(54) Title of the invention : CELL CULTURE PROCESS FOR MODULATING HIGH MANNOSE GLYCANS IN A GLYCOFORM COMPOSITION

(51) International classification	:A61K	(71)**Name of Applicant :**
(31) Priority Document No	:NA	**1)Dr. Reddy™s Laboratories Limited**
(32) Priority Date	:NA	Address of Applicant :8-2-337, Road No. 3, Banjara Hills,
(33) Name of priority country	:NA	Hyderabad, Andhra Pradesh, India Andhra Pradesh India
(86) International Application No	:NA	(72)**Name of Inventor :**
Filing Date	:NA	**1)P. Madhava Ram**
(87) International Publication No	: NA	**2)Prafulla Mahajan**
(61) Patent of Addition to Application Number	:NA	**3)Rojan Jose**
Filing Date	:NA	**4)Hepshiba Jobin**
(62) Divisional to Application Number	:NA	
Filing Date	:NA	

(57) Abstract :
The invention discloses a cell culture process to increase the percentage of high mannose glycans in a glycoform composition. In particular, the cells are cultured at first temperature for about 20 hours and subsequently subjected to reduced temperature to obtain a glycoprotein with glycoform composition containing an increased percentage of high mannose glycans, as compared to cell culture not comprising a temperature shift at about 20 hours.

No. of Pages : 15 No. of Claims : 4

(12) PATENT APPLICATION PUBLICATION
(21) Application No.1442/CHE/2014 A
(19) INDIA
(22) Date of filing of Application :19/03/2014
(43) Publication Date : 25/12/2015

(54) Title of the invention : A CELL CULTURE PROCESS FOR MODULATING HIGH MANNOSE AND AFUCOSYLATED GLYCANS BY DISTRIBUTED SUPPLEMENTATION OF MANGANESE

(51) International classification :A61K
(31) Priority Document No :NA
(32) Priority Date :NA
(33) Name of priority country :NA
(86) International Application No :NA
Filing Date :NA
(87) International Publication No : NA
(61) Patent of Addition to Application Number :NA
Filing Date :NA
(62) Divisional to Application Number :NA
Filing Date :NA

(71)**Name of Applicant :**
1)Dr. Reddy™s Laboratories Limited
Address of Applicant :8-2-337, Road No. 3, Banjara Hills, Hyderabad, Andhra Pradesh, India Andhra Pradesh India
(72)**Name of Inventor :**
1)Prafulla Mahajan
2)P. Madhava Ram
3)Rojan Jose
4)Hepshiba Jobin

(57) Abstract :
The invention describes a cell culture process for reducing percentage of high mannosylated and afucosylated glycans. In particular, the process consists of supplementing cell culture with Manganese that is distributed over the course of cell culture.

No. of Pages : 21 No. of Claims : 5

(12) PATENT APPLICATION PUBLICATION
(21) Application No.1577/CHE/2014 A
(19) INDIA
(22) Date of filing of Application :25/03/2014
(43) Publication Date : 25/12/2015

(54) Title of the invention : A METHOD TO PREPARE ZNO PROPYLENE GLYCOL WATER NANOFLUIDS WITH IMPROVED TRANSPORT PROPERTIES

(51) International classification :C07D
(31) Priority Document No :NA
(32) Priority Date :NA
(33) Name of priority country :NA
(86) International Application No :NA
Filing Date :NA
(87) International Publication No : NA
(61) Patent of Addition to Application Number :NA
Filing Date :NA
(62) Divisional to Application Number :NA
Filing Date :NA

(71)**Name of Applicant :**
1)SASTRA University
Address of Applicant :Tirumalaisamudram, Thanjavur 613 401, Tamil Nadu, India Tamil Nadu India
(72)**Name of Inventor :**
1)RAJAN, K. S.
2)SUGANTHI, K. S.

(57) Abstract :
The present invnetion discloses a process for preparing a coolant, and the coolant prepared thereof, with advantageous properties. The process comprises dispersing ZnO nanoparticles in propylene glycol through ultrasonification to obtain a ZnO-propylene glycol dispersion, followed by diluting said dispersion with water to obtain the coolant. The viscosity of the coolant prepared by the method of the present invention is lower than the viscosity of propylene glycol-water mixture.

No. of Pages : 31 No. of Claims : 8

(12) PATENT APPLICATION PUBLICATION
(19) INDIA
(22) Date of filing of Application :29/03/2014

(21) Application No.1706/CHE/2014 A
(43) Publication Date : 25/12/2015

(54) Title of the invention : VEHICLE FALL DETECTION AND NOTIFICATION SYSTEM AND METHOD THERFOR

(51) International classification :B60B
(31) Priority Document No :NA
(32) Priority Date :NA
(33) Name of priority country :NA
(86) International Application No :NA
Filing Date :NA
(87) International Publication No : NA
(61) Patent of Addition to Application Number :NA
Filing Date :NA
(62) Divisional to Application Number :NA
Filing Date :NA

(71)**Name of Applicant :**
1)MURKUTE DHANASHREE PARESH
Address of Applicant :House No. 1363/2A, Prabhakar, First Main, First Cross, Sadashiv nagar, Belgaum - 590002 Karnataka, India Karnataka India
(72)**Name of Inventor :**
1)MURKUTE DHANASHREE PARESH

(57) Abstract :
A vehicle fall detection and notification system for detecting an accident of a two-wheeler vehicle and providing timely first aid to a rider, comprises a fall detection unit (FDU), a communication device and an accident server. The FDU is mounted on the two-wheeler vehicle and is in communication with a communication device associated with the rider. The communication device is in communication with the accident server. When the two-wheeler vehicle travelling at a high speed, trips or falls down in the event of an accident of the two-wheeler vehicle, the FDU detects the fall and transmits a message indicating the fall of the vehicle to the communication device associated with the rider. The communication device transmits an emergency message to the accident server whereupon the accident server notifies a medical center to enable the medical center to provide timely first aid and medical services to the rider. Fig.1

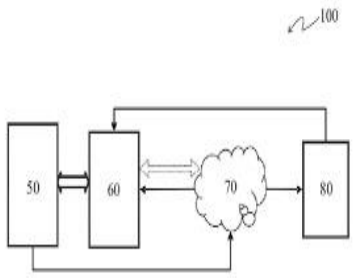

Figure 1

No. of Pages : 50 No. of Claims : 14

(12) PATENT APPLICATION PUBLICATION
(21) Application No.10881/CHENP/2012 A
(19) INDIA
(22) Date of filing of Application :28/12/2012
(43) Publication Date : 25/12/2015

(54) Title of the invention : PHOTOSENSITIVE RESIN COMPOSITION PHOTOSENSITIVE RESIN COMPOSITION FILM AND SEMICONDUCTOR DEVICE USING THE PHOTOSENSITIVE RESIN COMPOSITION OR THE PHOTOSENSITIVE RESIN COMPOSITION FILM

(51) International classification :G03F7/023,C09J7/02,C09J11/06
(31) Priority Document No :2010-151596
(32) Priority Date :02/07/2010
(33) Name of priority country :Japan
(86) International Application No :PCT/JP2011/063339
Filing Date :10/06/2011
(87) International Publication No :WO 2012/002134 A1
(61) Patent of Addition to Application Number :NA
Filing Date :NA
(62) Divisional to Application Number :NA
Filing Date :NA

(71)**Name of Applicant :**
1)TORAY INDUSTRIES INC.
Address of Applicant :1 1 Nihonbashi Muromachi 2 chome Chuo ku Tokyo 1038666 Japan
(72)**Name of Inventor :**
1)NIWA Hiroyuki

(57) Abstract :
Disclosed are a photosensitive resin composition and a photosensitive resin composition film each of which has small stress after curing and exhibits excellent adhesion after thermal compression bonding. Specifically disclosed is a photosensitive resin composition which is characterized by containing: (a) an alkali soluble polyimide which has a structural unit represented by general formula (1) while having a structure represented by general formula (2) and/or (3) at at least one end of the main chain; (b) a compound which has two or more epoxy groups and/or oxetanyl groups in each molecule; and (c) a quinonediazide compound. The photosensitive resin composition is also characterized in that: less than 10 parts by weight of an acrylic resin is contained per 100 parts by weight of the polyimide (a); and the content of the compound (b) is not less than 20 parts by weight per 100 parts by weight of the polyimide (a).

No. of Pages : 72 No. of Claims : 15

(12) PATENT APPLICATION PUBLICATION
(19) INDIA
(22) Date of filing of Application :28/12/2012
(21) Application No.10886/CHENP/2012 A
(43) Publication Date : 25/12/2015

(54) Title of the invention : VEHICLE DOOR MIRROR

(51) International classification :B60R1/076,B60R1/06,F16C11/04
(31) Priority Document No :2010-158414
(32) Priority Date :13/07/2010
(33) Name of priority country :Japan
(86) International Application No :PCT/JP2011/059362
Filing Date :15/04/2011
(87) International Publication No :WO 2012/008193 A1
(61) Patent of Addition to Application Number :NA
Filing Date :NA
(62) Divisional to Application Number :NA
Filing Date :NA

(71)**Name of Applicant :**
1)KABUSHIKI KAISHA HONDA LOCK
Address of Applicant :3700 Aza Wadayama Shimonaka Sadowara cho Miyazaki shi Miyazaki 8800293 Japan
(72)**Name of Inventor :**
1)KENMOCHI Kenji
2)KUKITA Tomoyuki

(57) Abstract :
Disclosed is a vehicle door mirror in which: an upward facing support seat and a support shaft rising from said support seat are attached to the side door side of a vehicle; a click mechanism provided on a bracket allows the user to feel a click upon rotation of the bracket between the opposing surfaces of the support seat and a bearing portion which is rotatably supported by the support shaft; a compressed coil spring is provided between a spring receiving member fixed to the support shaft and a flat spring receiving surface formed on the bearing portion; and a lubricant reservoir fillable with a lubricant are formed on the spring receiving surface. The lubricant reservoir (31) has and is connected to at least a first groove (32) one end of which is arranged nearer to the center of the support shaft (11) than the other end. By this means the lubricant is constantly and stably supplied to sliding area of the coil spring on the spring receiving surface preventing noise.

No. of Pages : 19 No. of Claims : 5

(12) PATENT APPLICATION PUBLICATION
(21) Application No.1732/CHE/2014 A
(19) INDIA
(22) Date of filing of Application :01/04/2014
(43) Publication Date : 25/12/2015

(54) Title of the invention : SIMPLE & COST EFFECTIVE DETACHABLE FIXTURES FOR A WARDROBE BETTER ORGANISING AND SPACE UTILISATION

(51) International classification	:A47B 61/00
(31) Priority Document No	:NA
(32) Priority Date	:NA
(33) Name of priority country	:NA
(86) International Application No	:NA
Filing Date	:NA
(87) International Publication No	: NA
(61) Patent of Addition to Application Number	:NA
Filing Date	:NA
(62) Divisional to Application Number	:NA
Filing Date	:NA

(71)**Name of Applicant :**
1)RAGHU RAGHAVAN PILLAI
Address of Applicant :SARANYA, HOUSE NO. 155 UDARASIROMANI ROAD, VELLAYAMBALAM, THIRUVANATHAPURAM - 695 010 Kerala India
(72)**Name of Inventor :**
1)RAGHU RAGHAVAN PILLAI

(57) Abstract :
ABSTRACT A box-file design type detachable fixture is proposed for a wardrobe for easy arrangement and retrieval of clothes from a wardrobe. Individual clothes are wrapped around cloth holders, which are then attached to the detachable holder; similar to attaching paper sheets to a box file. By pulling out the detachable holder from its seat, the entire bunch of clothes (max 10 nos proposed)can be taken out of the wardrobe without destroying their crease and folds. The selected cloth can be pulled out from the detachable holder, and the remaining bunch can be put back in its place. Since the task can be performed outside the wardrobe, it can be performed at ease. Since the clothes are held together in small bunches, it does not need much exertion to pull out the detachable holder from its seat, and also to put it back. This helps in effective utilisation of the space inside the wardrobe; particularly the inner most space, for wardrobes with more depth than the usual.

No. of Pages : 8 No. of Claims : 7

(12) PATENT APPLICATION PUBLICATION
(21) Application No.1733/CHE/2014 A
(19) INDIA
(22) Date of filing of Application :01/04/2014
(43) Publication Date : 25/12/2015

(54) Title of the invention : DESIGN AND FABRICATION OF STAPLE PUNCH MACHINE

(51) International classification	:B25C 5/00
(31) Priority Document No	:NA
(32) Priority Date	:NA
(33) Name of priority country	:NA
(86) International Application No	:NA
Filing Date	:NA
(87) International Publication No	: NA
(61) Patent of Addition to Application Number	:NA
Filing Date	:NA
(62) Divisional to Application Number	:NA
Filing Date	:NA

(71)**Name of Applicant :**
1)V.P. VENKATARAMANA MURTHY
Address of Applicant :79, VGB NAGAR, KRISHNAMPALAYAM, ERODE - 638 003 Tamil Nadu India
(72)**Name of Inventor :**
1)V.P. VENKATARAMANA MURTHY
2)A. PRASANTH
3)E. SURENDHAR
4)M. SRINIVASAN
5)M. VARUN

(57) Abstract :
NA

No. of Pages : 8 No. of Claims : 5

(12) PATENT APPLICATION PUBLICATION
(21) Application No.1097/CHENP/2014 A
(19) INDIA
(22) Date of filing of Application :11/02/2014
(43) Publication Date : 25/12/2015

(54) Title of the invention : SYSTEMS AND METHODS FOR PROVIDING REFURBISHED OR REMANUFACTURED ELECTRONIC DEVICES WITH MOISTURE-RESISTANT COATINGS

(51) International classification :B41J
(31) Priority Document No :61/750354
(32) Priority Date :08/01/2013
(33) Name of priority country :U.S.A.
(86) International Application No :PCT/US2014/010638
Filing Date :08/01/2014
(87) International Publication No :WO/2014/110106
(61) Patent of Addition to Application Number :NA
Filing Date :NA
(62) Divisional to Application Number :NA
Filing Date :NA

(71)**Name of Applicant :**
1)HZO, INC.
Address of Applicant :12637 SOUTH 265 WEST, SUITE 300 DRAPER, UTAH 84020 U.S.A.
(72)**Name of Inventor :**
1)STEVENS, BLAKE
2)SORENSON, MAX
3)GORDON, SCOTT B.

(57) Abstract :
An approach to refurbishing or remanufacturing an electronic device may involve exposing electrical components that are situated within an interior of the electronic device. The approach may also involve replacing one or more defective electronic components of the electronic device with one or more replacement components and applying a protective coating to at least a portion of the interior of the electronic device. The protective coating may cover the circuit board and the electronic components it carries. The protective coating may also cover at least some of the electrical connections of the electronic device. The protective coating may also be applied to the replacement component prior to reassembly. The resulting refurbished or remanufactured electronic device may thus be provided with moisture-resistance to help protect the electronic device from damage caused by exposure to moisture.

No. of Pages : 30 No. of Claims : 30

(12) PATENT APPLICATION PUBLICATION
(21) Application No.1226/CHE/2014 A
(19) INDIA
(22) Date of filing of Application :10/03/2014
(43) Publication Date : 25/12/2015

(54) Title of the invention : SYNTHESIS OF AMONIA BY NANO CATALYTIC PROCESS

(51) International classification :C07D
(31) Priority Document No :NA
(32) Priority Date :NA
(33) Name of priority country :NA
(86) International Application No :NA
Filing Date :NA
(87) International Publication No : NA
(61) Patent of Addition to Application Number :NA
Filing Date :NA
(62) Divisional to Application Number :NA
Filing Date :NA

(71)**Name of Applicant :**
1)EESAVYASA TECHNOLOGIES PVT. LTD.
Address of Applicant :PLOT NO: 79, PHASE-III, SVCIE, BALANAGAR, HYDERABAD, R.R. DISTRICT - 500 037 Andhra Pradesh India
(72)**Name of Inventor :**
1)D.P. CHAKRAVARTHY
2)BANDA RAVI SANKAR

(57) Abstract :
In this method of invention nano catalyst like osmium, ruthelium, gallium, platinum, nickel, yttrium and some other rare earth elements with their combinations are used for synthesis of ammonia. Sea water will be used for abundant production of hydrogen gas using some photo chemical reactions and air is another abundant resource of nitrogen. These two gases produced through such inexpensive resources are allowed to under go nano catalytic reactions using radio frequencies and maser resources. The rate of conversion of Ammonia will be more than 80% unlike low yields in conventional Habers process.

No. of Pages : 7 No. of Claims : 6

(12) PATENT APPLICATION PUBLICATION
(19) INDIA
(22) Date of filing of Application :17/02/2014

(21) Application No.1226/CHENP/2014 A
(43) Publication Date : 25/12/2015

(54) Title of the invention : A METHOD OF STERILIZING A CHAMBER

(51) International classification :A61L2/20,A61L2/16
(31) Priority Document No :61/525424
(32) Priority Date :19/08/2011
(33) Name of priority country :U.S.A.
(86) International Application No :PCT/US2012/051425
Filing Date :17/08/2012
(87) International Publication No :WO 2013/028545
(61) Patent of Addition to Application Number :NA
Filing Date :NA
(62) Divisional to Application Number :NA
Filing Date :NA

(71)**Name of Applicant :**
1)NOXILIZER INC.
Address of Applicant :1450 South Rolling Road Baltimore MD 21227 U.S.A.
(72)**Name of Inventor :**
1)OPIE David B.
2)GOULET Evan M.
3)DOLETSKI Blaine G.
4)WATERS William E.

(57) Abstract :
A system and method for decontamination of isolation enclosures includes a recirculating isolator configured to allow injection of a sterilant gas into the isolator. Levels of humidity and sterilant gas are selected to avoid condensation of either within the isolator. In an embodiment a positive pressure is maintained throughout the sterilization process.

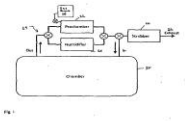

No. of Pages : 21 No. of Claims : 17

(12) PATENT APPLICATION PUBLICATION
(21) Application No.1227/CHE/2014 A
(19) INDIA
(22) Date of filing of Application :10/03/2014
(43) Publication Date : 25/12/2015

(54) Title of the invention : SYNTHESIS OF CONDUCTIVE POLYMERS FROM AGRO WASTE USING NANO PARTICLE COMPOSITES

(51) International classification :C08K
(31) Priority Document No :NA
(32) Priority Date :NA
(33) Name of priority country :NA
(86) International Application No :NA
Filing Date :NA
(87) International Publication No : NA
(61) Patent of Addition to Application Number :NA
Filing Date :NA
(62) Divisional to Application Number :NA
Filing Date :NA

(71)**Name of Applicant :**
1)EESAVYASA TECHNOLOGIES PVT. LTD.
Address of Applicant :PLOT NO: 79, PHASE-III, SVCIE, BALANAGAR, HYDERABAD, R.R. DISTRICT - 500 037 Andhra Pradesh India
(72)**Name of Inventor :**
1)D.P. CHAKRAVARTHY
2)BANDA RAVI SANKAR

(57) Abstract :
In this method of invention, using appropriate selection of natural fibrous materials like jute cellulose, cellulose triacetate material, aloe Vera, agave and gunnyby and similar type of materials are used as polymer sources. Using advanced nano technology methods like electro spinning, nano fibers are extracted from these materials and doped with certain concentration of nano 6arbon materials and some other catalytic materials. Due to polymerization these compounds form unique strength of polymers which not only takes the load, also Conducts electricity or heat with enhanced physical parameters. These advanced polymers by changing the compositions and adding some other materials will yield thermally conductive fibers, electrically conductive fibers, thermally insulating and electrically insulating fibers,! thermally insulating but electrically conductive polymers, thermally conductive j but electrically insulating fibers and optically translucent fibers and optically conductive fibers can be produced.

No. of Pages : 7 No. of Claims : 4

(12) PATENT APPLICATION PUBLICATION
(19) INDIA
(22) Date of filing of Application :01/04/2014

(21) Application No.1766/CHE/2014 A
(43) Publication Date : 25/12/2015

(54) Title of the invention : A MOUNTING SYSTEM FOR WALL HANGINGS AND A METHOD OF MAKING THE SAME

(51) International classification :A47F1/00
(31) Priority Document No :NA
(32) Priority Date :NA
(33) Name of priority country :NA
(86) International Application No :NA
Filing Date :NA
(87) International Publication No : NA
(61) Patent of Addition to Application Number :NA
Filing Date :NA
(62) Divisional to Application Number :NA
Filing Date :NA

(71)**Name of Applicant :**
1)MEWANBANJOP MAWROH
Address of Applicant :#233, 2ND FLOOR, KORAMANGALA 7TH BLOCK, BANGALORE - 560 095 Karnataka India
(72)**Name of Inventor :**
1)MEWANBANJOP MAWROH

(57) Abstract :
A mounting system for a wall hanging including one thin metallic strip pasted on surface of wall using adhesive tape and one magnet piece pasted on back surface of wall hanging using adhesive tape. The method of making a mounting system for a wall hanging comprises providing one magnet piece, providing one thin metallic strip, selecting location on wall to mount the wall hanging, pasting the thin metallic strip on selected location using a first adhesive tape, pasting the magnet piece on back surface of the wall hanging using second adhesive tape, such that the magnet piece location on the wall hanging corresponds with the location of metallic strip on the wall and bringing the wall hanging near the wall, such that the magnet piece on the wall hanging comes on top of the location of thin metallic strip on the wall, thereby sticking the magnet with the metallic strip.

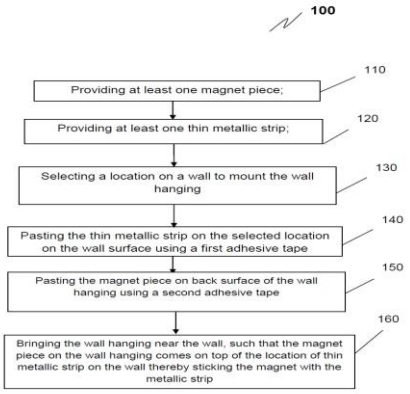

FIG. 5

No. of Pages : 23 No. of Claims : 10

(12) PATENT APPLICATION PUBLICATION
(19) INDIA
(22) Date of filing of Application :04/12/2012
(21) Application No.10165/CHENP/2012 A
(43) Publication Date : 25/12/2015

(54) Title of the invention : METHOD FOR PRODUCING A COATED AMORPHOUS METAL PART

(51) International classification :C23C16/01,A44C27/00,C22C16/00
(31) Priority Document No :10165287.3
(32) Priority Date :08/06/2010
(33) Name of priority country :EPO
(86) International Application No :PCT/EP2011/059156
Filing Date :01/06/2011
(87) International Publication No :WO 2011/154312
(61) Patent of Addition to Application Number :NA
Filing Date :NA
(62) Divisional to Application Number :NA
Filing Date :NA

(71)**Name of Applicant :**
1)THE SWATCH GROUP RESEARCH AND DEVELOPMENT LTD
Address of Applicant :Rue des Sors 3 CH 2074 Marin Switzerland
(72)**Name of Inventor :**
1)WINKLER Yves
2)DIONNE Jean Fran§ois
3)BOURBAN Stewes
4)DUBACH ALBAN
5)FALLET Yann

(57) Abstract :
The invention relates to a method for producing a first part (5) having at least one surface and being made from a first material. The first part comprises at least one coating (3) on said at least one surface. The production method includes the following steps: a) obtaining a second part (1) comprising a cavity (2) forming the negative of the first part; b) depositing the aforementioned coating (3) including at least a first layer on the second part; c) obtaining the first metal material said selected first material being capable of becoming at least partially amorphous; d) shaping the first material in the cavity of the second part such as to rigidly connect the coating to the at least one surface of the first part said first material being subjected no later than at the time of shaping to a treatment allowing same to become at least partially amorphous; and e) separating the first part from the second part so as to obtain a first part coated with the above mentioned coating.

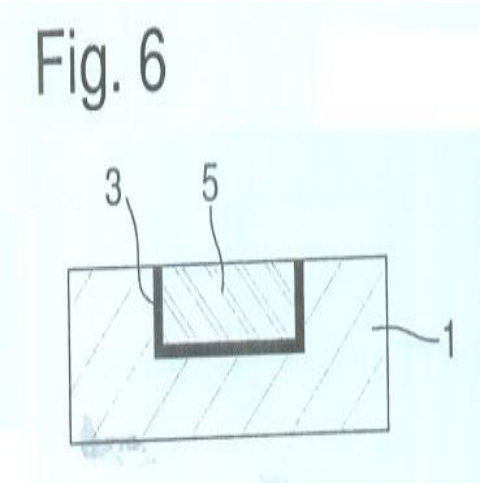

No. of Pages : 28 No. of Claims : 19

(12) PATENT APPLICATION PUBLICATION
(19) INDIA
(22) Date of filing of Application :04/12/2012
(21) Application No.10169/CHENP/2012 A
(43) Publication Date : 25/12/2015

(54) Title of the invention : PROCESS FOR PRODUCING FINELY DIVIDED SUSPENSIONS BY MELT EMULSIFICATION •

(51) International classification	:B01F 3/08, B01F 7/00
(31) Priority Document No	:10161989.8
(32) Priority Date	:05/05/2010
(33) Name of priority country	:EPO
(86) International Application No	:PCT/EP2011/057086
Filing Date	:04/05/2011
(87) International Publication No	: NA
(61) Patent of Addition to Application Number	:NA
Filing Date	:NA
(62) Divisional to Application Number	:NA
Filing Date	:NA

(71)**Name of Applicant :**
1)BASF SE
Address of Applicant :67056 Ludwigshafen Germany
Germany
(72)**Name of Inventor :**
1)ENGEL Robert
2)DANNER Thomas
3)SACHWEH Bernd
4)JUDAT Sonja
5)BAUDER Andreas
6)DENKOV Nikolai
7)TCHOLAKOVA Slavka

(57) Abstract :
The invention relates to a process for the preparation of finely divided suspensions by melt emulsification, comprising at least one substance with a melting temperature above room temperature, comprising the following steps: (a) passing at least one preemulsion, comprising one continuous phase and one disperse phase, to a rotor-stator machine, a rotor-rotor machine or to a continuous and/or disperse phase; (b) optionally adding one or more further components to the at least one preemulsion in the rotor-stator machine; (c) emulsifying the at least one preemulsion with mechanical shear and/or elongation and/or turbulence at a temperature which is at most 10 K above the melting temperature of the at least one substance with a melting temperature above room temperature, or at a temperature which is at least 10 K below and at most 10 K above the glass transition temperature or the melting temperature, if the substance with a melting temperature above room temperature is a polymer, for producing a finely divided emulsion; (d) cooling the finely divided emulsion to produce a finely divided suspension; where the disperse phase fraction at least in step (c) is in the range from 85% to 99.5%.

No. of Pages : 15 No. of Claims : 12

(12) PATENT APPLICATION PUBLICATION
(19) INDIA
(22) Date of filing of Application :02/04/2014
(21) Application No.1772/CHE/2014 A
(43) Publication Date : 25/12/2015

(54) Title of the invention : Method, System and Apparatus for Multi-Modulated MIMO

(51) International classification :H04L
(31) Priority Document No :NA
(32) Priority Date :NA
(33) Name of priority country :NA
(86) International Application No :PCT// /
Filing Date :01/01/1900
(87) International Publication No : NA
(61) Patent of Addition to Application Number :NA
Filing Date :NA
(62) Divisional to Application Number :NA
Filing Date :NA

(71)**Name of Applicant :**
1)M. S. Ramaiah School of Advanced Studies, Bangalore
Address of Applicant :#470-P, Peenya Industrial Area, Peenya 4th Phase, Bengaluru, Karnataka, India 560 058. Karnataka India
(72)**Name of Inventor :**
1)R Chetan
2)Sanket Dessai
3)N D Gangadhar

(57) Abstract :
ABSTRACT According to the aspect of the present disclosure, Multiple Input Multiple Output (MIMO) transmitter and receiver blocks are implemented with multi-modulation techniques to achieve spatial diversity. Integration of MIMO technology and multi-modulation techniques increases the system capacity, reduces the bit error rate (BER) and enhances the data rate. According to yet another aspect of the present disclosure, space-time block code (STBC) or Alamouti coding technique is employed to improve the spectral efficiency and to reduce receiver complexity. In one embodiment the multi-modulation combines BPSK-QPSK, BPSK-16-QAM, QPSK-16-QAM, and BPSK-QPSK-16-QAM techniques to implement the MIMO transmitter and receiver.

No. of Pages : 19 No. of Claims : 7

(12) PATENT APPLICATION PUBLICATION
(21) Application No.1773/CHE/2014 A
(19) INDIA
(22) Date of filing of Application :02/04/2014
(43) Publication Date : 25/12/2015

(54) Title of the invention : A METHOD FOR TRANSMISSION OF MULTIPLE VOICE STREAMS IN PACKET BASED COMMUNICATIONS USING FPGA

(51) International classification	:H04L 29/00
(31) Priority Document No	:NA
(32) Priority Date	:NA
(33) Name of priority country	:NA
(86) International Application No	:NA
Filing Date	:NA
(87) International Publication No	: NA
(61) Patent of Addition to Application Number	:NA
Filing Date	:NA
(62) Divisional to Application Number	:NA
Filing Date	:NA

(71)**Name of Applicant :**
1)M/S. BHARAT ELECTRONIC LIMITED
Address of Applicant :NAGAVARA, OUTER RING ROAD, BANGALORE - 560 045 Karnataka India
(72)**Name of Inventor :**
1)KOTTE DURGA NAGA VENKATA SIVA PRASAD
2)SHRUTI SHRIVASTAVA
3)REKHA ASHOK BARADOL
4)RAJASHEKHAR NINGAPPA HIREKURABAR
5)VIJAY BARAGUR
6)SHIVA KUMAR BUYYA

(57) Abstract :
ABSTRACT The present invention proposes a method wherein multiple radio modules 1, 2, 3 within the network of one Wi-Fi access point 5 communicate with another set of multiple radio modules 8, 9, 10 networked with another Wi-Fi access point 6, simultaneously. Multiple radios 1, 2, 3, 8, 9,10 involved in voice conversations over Wi-Fi network (VOIP) 5, 6 need non overlapping time slots to support more number of users. A method which works over typical TDMA architecture, based on single higher clock, to process speech samples from radios and packetize inside FPGA on transmission side is disclosed. The method discussed in this invention handles jitter arising out of the ppm difference in clocks and makes packetization effective for communication. Figure 1

No. of Pages : 18 No. of Claims : 9

(12) PATENT APPLICATION PUBLICATION
(21) Application No.1642/CHE/2014 A
(19) INDIA
(22) Date of filing of Application :27/03/2014
(43) Publication Date : 25/12/2015

(54) Title of the invention : VOLTAGE INTENSITY BASED SYSTEM FOR NON-INVASIVE GLUCOSE MONITORING USING NIR AND METHOD THEREOF

(51) International classification :A61B
(31) Priority Document No :NA
(32) Priority Date :NA
(33) Name of priority country :NA
(86) International Application No :NA
Filing Date :NA
(87) International Publication No : NA
(61) Patent of Addition to Application Number :NA
Filing Date :NA
(62) Divisional to Application Number :NA
Filing Date :NA

(71)**Name of Applicant :**
1)AMRITA VISHWA VIDYAPEETHAM
Address of Applicant :Amritanagar P.O., Ettimadai, Coimbatore 641 112, Tamil Nadu, India Tamil Nadu India
(72)**Name of Inventor :**
1)MENON, K.A. Unnikrishna
2)HEMACHANDRAN, Deepak
3)KUNNATH, Abishek Thekkeyil

(57) Abstract :
VOLTAGE INTENSITY BASED SYSTEM FOR NON-INVASIVE GLUCOSE MONITORING USING NIR AND METHOD THEREOF The voltage intensity based system for non-invasive glucose monitoring in the blood by using NIR radiations at body site as per user defined condition. The system comprising of at least one sensor unit, at least one signal conditioning unit, at least one microcontroller unit and at least one communicating device connected either wire or wirelessly to the microcontroller unit. The system estimates the glucose level in the blood of the user by reflecting the NIR radiations from the dermis tissue and then by measuring the variation in the intensity of reflected NIR radiations with or without occluding the blood in the dermis tissue layer of the skin of the body. During the intensity variation the processing unit of the system uses the list of preset data values stored in the memory unit of the microcontroller which is obtained by using the long machine learning process.

No. of Pages : 31 No. of Claims : 8

(12) PATENT APPLICATION PUBLICATION
(21) Application No.1780/CHE/2014 A
(19) INDIA
(22) Date of filing of Application :02/04/2014
(43) Publication Date : 25/12/2015

(54) Title of the invention : A THREADED PIPE JOINT COUPLER WITH DOUBLE GRIP LOCKING SYSTEM

(51) International classification	:F16L 37/00
(31) Priority Document No	:NA
(32) Priority Date	:NA
(33) Name of priority country	:NA
(86) International Application No	:NA
Filing Date	:NA
(87) International Publication No	: NA
(61) Patent of Addition to Application Number	:NA
Filing Date	:NA
(62) Divisional to Application Number	:NA
Filing Date	:NA

(71)**Name of Applicant :**
1)Kumari Kiran
Address of Applicant :C/o Sri Mahendra Kumar. K Sri Valmika, Chamundeshweri Nagar, Near City club, Sira Gate, Tumkur Karnataka India
(72)**Name of Inventor :**
1)Vinoy Kumar

(57) Abstract :
The present invention relates to threaded Polyvinyl chloride (PVC) coupler, which is used to join the pipes in water discharge system comprising one or more locking pins for preventing slippage of the PVC pipes from the PVC coupler and inner cup seal, said PVC pipes to be joined using the coupler includes permanent square thread joint pipe on one side and temporary square thread joint pipe on other side. The coupler has uniform thickness all over and is provided with inner square threads, said coupler on both outer sides has slots/holes to insert the locking pin. The permanent square thread joint pipe has partial slots on both outer sides to rest the locking pin. A pre-defined gap is provided surrounding the locking pin for movement of the PVC pipes for avoiding torque of pump during vibration and at the time of the pump start and stop.

No. of Pages : 19 No. of Claims : 6

(12) PATENT APPLICATION PUBLICATION
(21) Application No.1781/CHE/2014 A
(19) INDIA
(22) Date of filing of Application :02/04/2014
(43) Publication Date : 25/12/2015

(54) Title of the invention : A METHOD FOR LOCATION TRACKING OF USER EQUIPMENT (UE) THROUGH PROACTIVE COMMANDS

(51) International classification :H04W
(31) Priority Document No :NA
(32) Priority Date :NA
(33) Name of priority country :NA
(86) International Application No :NA
Filing Date :NA
(87) International Publication No : NA
(61) Patent of Addition to Application Number :NA
Filing Date :NA
(62) Divisional to Application Number :NA
Filing Date :NA

(71)**Name of Applicant :**
1)Samsung R & D Institute India- Bangalore Private Limited
Address of Applicant :# 2870, Orion Building, Bagmane Constellation Business Park, Outer Ring Road, Doddanekundi Circle, Marathahalli Post, Bangalore-560037 Karnataka India
(72)**Name of Inventor :**
1)Ravikiran Ramakrishnarao
2)Thejeswara Reddy Pocha

(57) Abstract :
A method for tracking geographical location of one or more target User Equipments (UEs) through an initiator UE using Geographical Location Request (GLR) proactive command by a Universal Integrated Circuit Card (UICC) is provided. A SMS-PP data download to UICCs on the one or more target UEs will trigger GLR command to the one or more target UEs. When the one or more target UEs obtain the geographical location using a Global Positioning System (GPS) application, an ENVELOPE command is sent to the UICCs on the one or more target UEs, which further create a SMS that contains the geographical location data and sends to the wireless network. The SMS is sent to initiator UE through the SMS. Further, the initiator UE uses a mapping application to obtain location of the one or more target UEs. FIG. 1

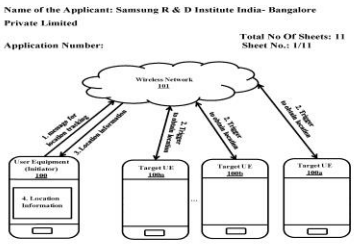

FIG. 1

Arun Kishore Narasani
Patent Agent

No. of Pages : 46 No. of Claims : 13

(12) PATENT APPLICATION PUBLICATION
(19) INDIA
(22) Date of filing of Application :02/04/2014
(21) Application No.1782/CHE/2014 A
(43) Publication Date : 25/12/2015

(54) Title of the invention : A METHOD AND SYSTEM FOR RETRIEVING INFORMATION FROM KNOWLEDGE-BASED ASSISTIVE NETWORK TO ASSIST USER™S INTENT

(51) International classification	:G06F 17/00
(31) Priority Document No	:NA
(32) Priority Date	:NA
(33) Name of priority country	:NA
(86) International Application No	:NA
Filing Date	:NA
(87) International Publication No	: NA
(61) Patent of Addition to Application Number	:NA
Filing Date	:NA
(62) Divisional to Application Number	:NA
Filing Date	:NA

(71)**Name of Applicant :**
1)Samsung R & D Institute India- Bangalore Private Limited
Address of Applicant :# 2870, Orion Building, Bagmane Constellation Business Park, Outer Ring Road, Doddanekundi Circle, Marathahalli Post, Bangalore-560037 Karnataka India
(72)**Name of Inventor :**
1)Sailesh Kumar Sathish
2)Satnam Singh

(57) Abstract :
A method and system for retrieving information in a knowledge-based assistive network including a plurality of information sources is provided. The method comprises receiving one or more localized queries at one or more information sources. Further, the method comprises sending one or more localized queries to one or more information sources sent in response to determining intent associated with the user. Furthermore, the method comprises computing a semantic similarity between the intent and the information of a knowledge graph associated with one or more information sources. The knowledge graph includes information corresponding to the information source having knowledge in one or more subject. Further, the method comprises retrieving one or more information source data in the knowledge-based assistive network in accordance to the semantic similarity. FIG. 1

No. of Pages : 108 No. of Claims : 60

(12) PATENT APPLICATION PUBLICATION
(19) INDIA
(22) Date of filing of Application :21/12/2012
(21) Application No.10647/CHENP/2012 A
(43) Publication Date : 25/12/2015

(54) Title of the invention : INFORMATION PROCESSING DEVICE AND INFORMATION PROCESSING METHOD

(51) International classification :H04N 13/04 , H04N 7/26
(31) Priority Document No :2010-143401
(32) Priority Date :24/06/2010
(33) Name of priority country :Japan
(86) International Application No :PCT/JP2011/063868
Filing Date :17/06/2011
(87) International Publication No : NA
(61) Patent of Addition to Application Number :NA
Filing Date :NA
(62) Divisional to Application Number :NA
Filing Date :NA

(71)**Name of Applicant :**
1)SONY CORPORATION
Address of Applicant :1-7-1 Konan Minato-ku Tokyo 108-0075 Japan
(72)**Name of Inventor :**
1)HIDEKI IWAMI
2)EISABURO ITAKURA
3)SATOSHI TSUBAKI
4)KEI KAKITANI
5)HIROAKI TAKAHASHI

(57) Abstract :
The present technology relates to an information processing apparatus and an information processing method that can reproduce high-quality stereoscopic images with low delay. An interpolation data storing unit (112} stores received L image data and R image data as interpolation data. A line-based multiple data link managing unit (105} manages a management table in which the numbers of packet errors in the L image data and the R image data of each line block and the like are registered. Based on the management table, an image data input switching unit {106} outputs the reception data when both of the numbers of packet errors in the L image data and the R image data contained in the reception data are smaller than a threshold value, and outputs interpolation data that corresponds to the reception data, is stored in the interpolation data storing unit (112), and has a smaller number of errors than a threshold value when both of the numbers of errors are not smaller than the threshold value. The present invention can be applied to a relay device that receives stereoscopic image data, for example.

No. of Pages : 146 No. of Claims : 12

(12) PATENT APPLICATION PUBLICATION
(19) INDIA
(22) Date of filing of Application :21/12/2012
(21) Application No.10650/CHENP/2012 A
(43) Publication Date : 25/12/2015

(54) Title of the invention : ZEOLITE PRODUCTION METHOD

(51) International classification :C01B39/46,C01B39/36
(31) Priority Document No :2010151489
(32) Priority Date :01/07/2010
(33) Name of priority country :Japan
(86) International Application No :PCT/JP2011/064765
Filing Date :28/06/2011
(87) International Publication No :WO 2012/002367
(61) Patent of Addition to Application Number :NA
Filing Date :NA
(62) Divisional to Application Number :NA
Filing Date :NA

(71)**Name of Applicant :**
1)NIPPON CHEMICAL INDUSTRIAL CO. LTD.
Address of Applicant :11 1 Kameido 9 chome Koto ku Tokyo 1368515 Japan
2)The University of Tokyo
(72)**Name of Inventor :**
1)ITABASHI Keiji
2)OKUBO Tatsuya
3)KAMIMURA Yoshihiro
4)Shanmugam Palani Elangovan

(57) Abstract :
Disclosed is a method for readily and inexpensively producing zeolite without using an organic structure directing agent (organic SDA). Specifically disclosed is a method whereby a gel containing a silica source an alumina source an alkaline source and water is reacted with zeolite seed crystals to produce a zeolite with the same kind of skeletal structure as said zeolite. The gel used is a gel of a composition whereby when a zeolite is synthesized from this gel only the synthesized zeolite comprises at least one of the kinds of composite building units of the target zeolite.

No. of Pages : 86 No. of Claims : 14

(12) PATENT APPLICATION PUBLICATION
(19) INDIA
(22) Date of filing of Application :21/12/2012
(21) Application No.10651/CHENP/2012 A
(43) Publication Date : 25/12/2015

(54) Title of the invention : RESOURCE MANAGEMENT SYTEM

(51) International classification :G06Q50/00
(31) Priority Document No :2010119619
(32) Priority Date :25/05/2010
(33) Name of priority country :Japan
(86) International Application No :PCT/JP2011/061995
Filing Date :25/05/2011
(87) International Publication No :WO 2011/148980
(61) Patent of Addition to Application Number :NA
Filing Date :NA
(62) Divisional to Application Number :NA
Filing Date :NA

(71)**Name of Applicant :**
1)PANASONIC CORPORATION
Address of Applicant :1006 Oaza Kadoma Kadoma shi Osaka 5718501 Japan
(72)**Name of Inventor :**
1)KAZUNO Hiroki
2)SOGO Tomoya
3)NAKANO Akio
4)KOBAYASHI Misayo

(57) Abstract :
Provided are information acquisition unit that periodically acquires usage state information of resource by load; user terminal that creates permitted usage period data; period setting unit that sets each loads permitted usage period based on permitted usage period data; determination unit that determines whether each loads resource usage is within permitted usage period; and display unit that distinctively displays whether resource usage period is within permitted usage period based on determination result by determination unit. User terminal creates single batch permitted usage period data. Period setting unit includes batch setting unit that performs batch setting whereby batch permitted usage period is set as permitted usage periods of all loads.

No. of Pages : 45 No. of Claims : 19

(12) PATENT APPLICATION PUBLICATION
(19) INDIA
(22) Date of filing of Application :31/03/2014
(21) Application No.1720/CHE/2014 A
(43) Publication Date : 25/12/2015

(54) Title of the invention : PORTABLE SOIL TESTING KIT

(51) International classification :A01B
(31) Priority Document No :NA
(32) Priority Date :NA
(33) Name of priority country :NA
(86) International Application No :NA
Filing Date :NA
(87) International Publication No : NA
(61) Patent of Addition to Application Number :NA
Filing Date :NA
(62) Divisional to Application Number :NA
Filing Date :NA

(71)**Name of Applicant :**
1)Dr. S. Riazuddin Ahmed
Address of Applicant :D. No. 11-3-744, Mallepally, Hyderabad500 001, A.P, India Andhra Pradesh India
(72)**Name of Inventor :**
1)Dr. S. Riazuddin Ahmed

(57) Abstract :
The invention discloses a portable soil test kit which constitutes of various components required for enabling qualitative analysis of soil fertility with respect to determining various parameters including pH, organic carbon, available nitrogen, available phosphorus, available potassium, available sulphur, calcareousness of soil, available Zinc, available Iron and available Boron.

No. of Pages : 30 No. of Claims : 7

(12) PATENT APPLICATION PUBLICATION
(19) INDIA
(22) Date of filing of Application :03/04/2014

(21) Application No.1787/CHE/2014 A
(43) Publication Date : 25/12/2015

(54) Title of the invention : AN INTEGRATED DEVELOPMENT TOOL

(51) International classification	:G06F 9/00
(31) Priority Document No	:NA
(32) Priority Date	:NA
(33) Name of priority country	:NA
(86) International Application No	:NA
Filing Date	:NA
(87) International Publication No	: NA
(61) Patent of Addition to Application Number	:NA
Filing Date	:NA
(62) Divisional to Application Number	:NA
Filing Date	:NA

(71)**Name of Applicant :**
1)Robert Bosch Engineering and Business Solutions Limited
Address of Applicant :123, Industrial Layout, Hosur Road, Koramangala, Bangalore 560095, Karnataka, INDIA Karnataka India
2)Robert Bosch GmbH
(72)**Name of Inventor :**
1)SANKRUTHI Arvind Devarajan

(57) Abstract :
An integrated development tool (101) for embedded devices (104a, 104b, 104n) is disclosed. The integrated development tool (101) comprises a controller (102) for connecting to at least one embedded device (104a, 104b, 104n). The tool (101) generates an end point component (103a, 103b, 103n) for each of the embedded devices (104a, 104b, 104n) for creating a connection (105a, 105b, 105n) between the end point component (103a, 103b, 103n) and corresponding the embedded device (104a, 104b, 104n). The controller (102) uses the connections (105a, 105b, 105n) to connect to the embedded devices (104a, 104b, 104n) at the same time to execute a task on each of the embedded devices (104a, 104b, 104n). Reference figure: Figure 1

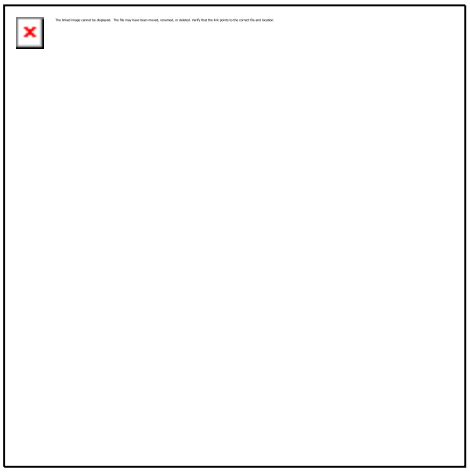

No. of Pages : 13 No. of Claims : 8

(12) PATENT APPLICATION PUBLICATION
(19) INDIA
(22) Date of filing of Application :12/12/2012
(21) Application No.10369/CHENP/2012 A
(43) Publication Date : 25/12/2015

(54) Title of the invention : WIND TURBINE BLADE FOR A ROTOR OF A WIND TURBINE

(51) International classification :A23B 7/08
(31) Priority Document No :10168064.3
(32) Priority Date :01/07/2010
(33) Name of priority country :EPO
(86) International Application No :PCT/EP2011/061127
Filing Date :01/07/2011
(87) International Publication No : NA
(61) Patent of Addition to Application Number :NA
Filing Date :NA
(62) Divisional to Application Number :NA
Filing Date :NA

(71)**Name of Applicant :**
1)LM GLASFIBER A/S
Address of Applicant :Jupitervej 6 DK-6000 Kolding Denmark. Denmark
(72)**Name of Inventor :**
1)QUIRING Peter
2)PRETE Rocco
3)LINDBY Torben

(57) Abstract :
A wind turbine blade comprises a profiled contour having a pressure side and a suction side a leading edge and a trailing edge with a chord extending between the leading edge and the trailing edge. The profiled contour generating a lift when being impacted by an incident airflow is formed by a hollow shell body. The hollow shell body is formed by at least a first shell body part and a second shell body part which are mutually connected at least at the trailing edge and/or the leading edge. An edge stiffener is arranged within the hollow shell body at a first part of the edges a first surface part of the edge stiffener be-ing connected to an inner side of the first shell body part and a second surface part of the edge stiffener being connected to an inner side of the second shell body part. Fig. 4

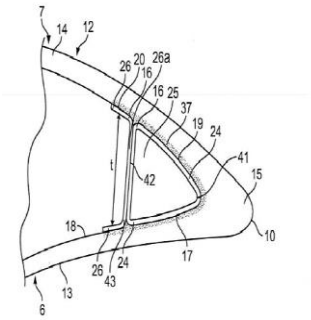

FIG. 4

No. of Pages : 29 No. of Claims : 15

(12) PATENT APPLICATION PUBLICATION
(19) INDIA
(22) Date of filing of Application :24/03/2014

(21) Application No.1532/CHE/2014 A
(43) Publication Date : 25/12/2015

(54) Title of the invention : ANTI THERMAL RUNAWAY BATTERY CHARGER USING INDIVIDUAL BATTERY VOLTAGE MEASUREMENT

(51) International classification :G10H1/00
(31) Priority Document No :NA
(32) Priority Date :NA
(33) Name of priority country :NA
(86) International Application No :NA
Filing Date :NA
(87) International Publication No : NA
(61) Patent of Addition to Application Number :NA
Filing Date :NA
(62) Divisional to Application Number :NA
Filing Date :NA

(71)**Name of Applicant :**
1)Ampere Vehicles Pvt. Ltd.
Address of Applicant :150/1B, NanthavanaThottam, Kannampalayam,Sulur, Coimbatore 641 402, India Tamil Nadu India
(72)**Name of Inventor :**
1)Pachyappa Baladhandayuthapani
2)Sathiayanathan Karthik

(57) Abstract :
[034] The invention discloses a system and method for anti thermal runaway battery charging of valve-regulated lead-acid battery using individual battery voltage measurement. It is found that a single battery failure may lead to a battery pack (206) failure if it is not detected at an early stage, which leads to a thermal run away process. By continuously monitoring the individual voltage of the battery by the charger, thermal run away condition that leads to battery destruction is eliminated. If a variation in voltage of an individual battery occurs then the microcontroller (208) identifies such a fault and controls the charging process in order to avoid thermal runaway of the battery. The invention also helps in identifying the faulty battery in the battery pack, if the charging process terminates due to uncontrolled charging. (FIGURE 2)

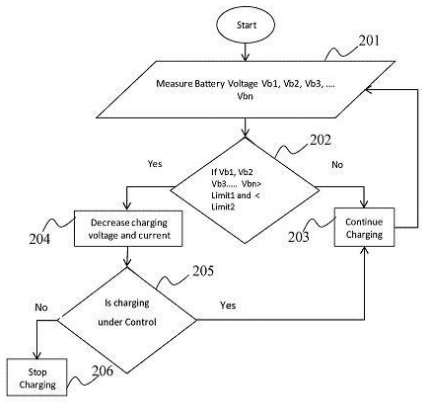

FIGURE 2

No. of Pages : 16 No. of Claims : 7

(12) PATENT APPLICATION PUBLICATION
(21) Application No.1803/CHE/2014 A
(19) INDIA
(22) Date of filing of Application :04/04/2014
(43) Publication Date : 25/12/2015

(54) Title of the invention : AN APPARATUS FOR THE GENERATION, TRANSFER AND USAGE OF RESOURCES

(51) International classification	:F03G 7/00	
(31) Priority Document No	:NA	
(32) Priority Date	:NA	
(33) Name of priority country	:NA	
(86) International Application No	:NA	
Filing Date	:NA	
(87) International Publication No	: NA	
(61) Patent of Addition to Application Number	:NA	
Filing Date	:NA	
(62) Divisional to Application Number	:NA	
Filing Date	:NA	

(71)**Name of Applicant :**
1)K. RAVINDRA SHETTY
Address of Applicant :C-606, NAGARJUNA GREEN RIDGE APARTMENT, 80 FEET ROAD, HSR LAYOUT SECTOR 2, BANGALORE - 560 102 Karnataka India
(72)**Name of Inventor :**
1)K. RAVINDRA SHETTY

(57) Abstract :
Abstract: An efficient apparatus for the generation, transfer and usage of resources has been proposed. A set of flying/floating systems consist of generation units, which are connected to the surface on the earth. Generation of resources could be in any of the forms, viz., and solid fluid, electric power, resources, any form of energy, any signal and so on. These generated resources are transferred to the ground through appropriate medium and vice versa. Few resources could be transferred through physical connection and few of them through wireless. Single or multiple generator systems are located at single or multiple locations and at various altitudes and longitudes. These resources are connected to the user or ground in one on one or many to one or one to many or many to many and vice versa methods. In one of the embodiment surface of the floating enclosure or generating system may comprise of solar power generating cells or power generating coating, or wind fans generating power, which in turn generate electric power or resources, which will be fed to the ground. An efficient and novel method for extracting fluid from the space is fitted in/on the floating/generating system. Collected liquid will be transfer to the surface on the earth/user. Various types of fans, propellers are fitted on the flying system is/are connected to the power generating units and finally power is transferred back to the user on the ground. In few cases appropriate gases or compounds, communication signals will be sent to the flying system and vice versa. Its also possible to send light beams between generator system and user. In few cases some multimedia contents will be played on the generating system. It is also possible that connected pipes between ground and space will change the ground level atmosphere and temperatures. Similarly other resources generated and transferred between flying system to ground and vice versa.

No. of Pages : 10 No. of Claims : 10

(12) PATENT APPLICATION PUBLICATION
(21) Application No.1082/CHE/2014 A
(19) INDIA
(22) Date of filing of Application :03/03/2014
(43) Publication Date : 25/12/2015

(54) Title of the invention : ONCE-THROUGH ELECTROLYTIC SYSTEM AND METHOD FOR TREATMENT OF BALLAST WATER

(51) International classification :F01D5/00
(31) Priority Document No :NA
(32) Priority Date :NA
(33) Name of priority country :NA
(86) International Application No :NA
Filing Date :NA
(87) International Publication No : NA
(61) Patent of Addition to Application Number :NA
Filing Date :NA
(62) Divisional to Application Number :NA
Filing Date :NA

(71)**Name of Applicant :**
1)THANGAPPAN JEYANANTH
Address of Applicant :86/1, VENGAIVASAL MAIN ROAD, GOWRIVAKKAM, CHENNAI - 600 073 Tamil Nadu India
(72)**Name of Inventor :**
1)RAMAN NAGARAJAN
2)NATARAJAN SIVAGNANAM
3)LOGANATHAN VEDAPRAKASH

(57) Abstract :
Abstract The present invention relates to a system and method for once-through ballast water treatment. The system consists of a self cleaning filter (1.4), eiectrolyzer (1.6) having a cell housing and electrode assembly, connected thereto the electrical terminals (1.8) and a feed back control unit to regulate the mixed oxidant production. The eiectrolyzer generates mixed oxidants by electrolyzing the salts present in the ballast water, on supplying Direct Current. The mixed oxidants disinfect and neutralize the microorganisms present in ballast water. The neutralization unit, fitted along the discharge pipeline (1.19) neutralizes the excess or unutilized oxidants present in the discharge waters. The apparatus is designed thereto work efficiently with ballast water flow rate of 25 to 5500 m3/h; temperature of 8°C to 40°C; and salinity of 3500 ppm and 35000 ppm. The apparatus is safe for ships crew, treats the ballast water safely and is safe for the environment as well.

No. of Pages : 25 No. of Claims : 10

(12) PATENT APPLICATION PUBLICATION
(19) INDIA
(22) Date of filing of Application :04/04/2014
(21) Application No.1806/CHE/2014 A
(43) Publication Date : 25/12/2015

(54) Title of the invention : APPARATUS WITH ADVANCED METHODS FOR WATER PURIFICATION

(51) International classification	:C02F 1/00
(31) Priority Document No	:NA
(32) Priority Date	:NA
(33) Name of priority country	:NA
(86) International Application No	:NA
Filing Date	:NA
(87) International Publication No	: NA
(61) Patent of Addition to Application Number	:NA
Filing Date	:NA
(62) Divisional to Application Number	:NA
Filing Date	:NA

(71)**Name of Applicant :**
1)AQUAMALL WATER SOLUTIONS LIMITED
Address of Applicant :140 C-4, BOMMASANDRA INDUSTRIAL AREA, HOSUR ROAD, BANGALORE - 560 099 Karnataka India
(72)**Name of Inventor :**
1)DR. ABHAY KUMAR
2)SURESH LAL GOKLANEY

(57) Abstract :
ABSTRACT OF THE INVENTION The present invention relates to an integrated liquid treatment system, more particularly to a water purification system comprising advanced methods of water purification including electronically programmed purification technology optimization process, electronic sensor to shutdown purification after tank full, Electronic membrane life enhancer, magnetic treatment of water and antibacterial disinfection until the point of use of the said purified water. The said integrated liquid treatment system comprises of a water inlet system, a filtration unit, a purification unit, and a storage unit to provide purified drinking water. The said filtration unit further comprises a sediment filter and/or chemi-block media such as a carbon filter which treats the raw water from the source. The said purification unit comprises a Reverse Osmosis purifier and an Ultraviolet purification system. The said purification system provides complete purification of the treated water from the filtration unit. The filtration unit and purification unit are connected by two solenoid valve connected in series and a pump. The storage unit is a tank connected to the purification unit to receive purified water from said purification unit which further comprises a electronic sensor and TDS sensor. Placed between the storage unit and the purification unit is a Magnetron which provides magnetic field treatment to the purified water. The TDS sensing unit calibrates the TDS of the purified water stored in the storage tank and the TDS input unit allows user to input desired TDS of the water purified water. The TDS Sensing unit further comprises a Logic PCB that connects to the purification Unit. The said liquid treatment system of the present invention provides advanced methods of water purification and is completely integrated water purifier system that provides an enhanced and efficient water purifier.

No. of Pages : 12 No. of Claims : 14

(12) PATENT APPLICATION PUBLICATION
(21) Application No.1807/CHE/2014 A
(19) INDIA
(22) Date of filing of Application :04/04/2014
(43) Publication Date : 25/12/2015

(54) Title of the invention : WATER PURIFICATION SYSTEM WITH INCREASED BIO- AVAILABILITY OF WATER

(51) International classification	:C02F 1/00
(31) Priority Document No	:NA
(32) Priority Date	:NA
(33) Name of priority country	:NA
(86) International Application No	:NA
Filing Date	:NA
(87) International Publication No	: NA
(61) Patent of Addition to Application Number	:NA
Filing Date	:NA
(62) Divisional to Application Number	:NA
Filing Date	:NA

(71)**Name of Applicant :**
1)EUREKA FORBES LTD
Address of Applicant :NO. 42, P-3/C, HARALUKUNTE MUNESHWARA LAYOUT, KUDLU, BANGALORE - 560 068 Karnataka India
(72)**Name of Inventor :**
1)DR. ABHAY KUMAR

(57) Abstract :
ABSTRACT OF THE INVENTION A method and apparatus in which purified water is magnetically treated to provide water with more bio-availability, thereby providing more healthy water for the purpose of drinking. The method includes removing a volume of water from a microbiologically contaminated environment, using any of the purification technologies and then passing the volume of said purified water through the magnetic apparatus of the present invention. The apparatus includes one or more permanent magnets of alternating polarity to form a magnetic field through which the water is treated and passed. The Magnetic lines of forces which are formed in the magnetic apparatus are broken when water is allowed to pass through the same. These lines of forces then de-cluster the water molecules thus making them more bio-available.

No. of Pages : 8 No. of Claims : 6

(12) PATENT APPLICATION PUBLICATION
(19) INDIA
(22) Date of filing of Application :28/12/2012
(21) Application No.10893/CHENP/2012 A
(43) Publication Date : 25/12/2015

(54) Title of the invention : LOW NOISE PULLEY

(51) International classification :F16H55/40
(31) Priority Document No :12/792003
(32) Priority Date :02/06/2010
(33) Name of priority country :U.S.A.
(86) International Application No :PCT/US2011/038018
Filing Date :26/05/2011
(87) International Publication No :WO 2011/153045
(61) Patent of Addition to Application Number :NA
Filing Date :NA
(62) Divisional to Application Number :NA
Filing Date :NA

(71)**Name of Applicant :**
1)DAYCO IP HOLDINGS LLC
Address of Applicant :2025 W. Sunshine Street Suite L145 Springfield MO 65807 U.S.A.
(72)**Name of Inventor :**
1)DUTIL Kevin G.
2)LINDSTROM James Kevin
3)FITTRO Zachary
4)SWANE Jeffrey A.
5)BROWN Donald B.
6)CRIST Robert James

(57) Abstract :
Low noise pulleys and methods of constructing low noise pulleys are disclosed. In a first aspect first and second pluralities of arms extending radially outward from the outer hub to the outer rim are angularly offset from each other about the axis of rotation to eliminate symmetry across the lateral midline of the pulley. In a second aspect the radially outermost ends of a plurality of arms are arcuately spaced apart according to a pitch sequence describing a pseudo random pattern of relative spacings so as to reduce or eliminate rotational symmetry of the pulley. In a third aspect features of the first and second aspects are combined and in one embodiment first and second pluralities of arms are respectively approximately oppositely canted so as to vary the arcuate spacings of the laterally outermost ends of the arms.

FIG. 1A

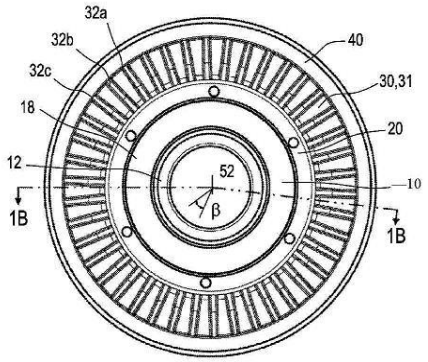

No. of Pages : 31 No. of Claims : 20

(12) PATENT APPLICATION PUBLICATION
(19) INDIA
(22) Date of filing of Application :28/12/2012

(21) Application No.10896/CHENP/2012 A
(43) Publication Date : 25/12/2015

(54) Title of the invention : ACCESS TO A FILE SYSTEM WITH SEMANTIC INDEXATION

(51) International classification :G06F17/30
(31) Priority Document No :1002766
(32) Priority Date :30/06/2010
(33) Name of priority country :France
(86) International Application No :PCT/FR2011/050997
Filing Date :02/05/2011
(87) International Publication No :WO 2012/001249
(61) Patent of Addition to Application Number :NA
Filing Date :NA
(62) Divisional to Application Number :NA
Filing Date :NA

(71)**Name of Applicant :**
1)ALCATEL LUCENT
Address of Applicant :3 avenue Octave Grard F 75007 Paris France
(72)**Name of Inventor :**
1)MAAG Maria Coralia Laura
2)HACID Hakim

(57) Abstract :
Method of allowing the user of an application operating on an information processing system to access a set of files organized according to a tree of directories by means of an element of a man machine interface comprising means for navigating within the tree from an initial position to a final position in which this initial position is determined as a function of a correlation between first semantic information provided by the application and second semantic information associated with the directories.

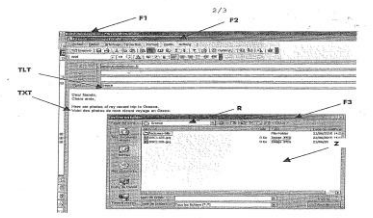

FIG. 2

No. of Pages : 15 No. of Claims : 14

(12) PATENT APPLICATION PUBLICATION
(19) INDIA
(22) Date of filing of Application :24/03/2014
(21) Application No.1539/CHE/2014 A
(43) Publication Date : 25/12/2015

(54) Title of the invention : SYSTEM AND METHOD FOR INSTANTLY CHANGING A PHYSICAL STATE OF A MATTER

(51) International classification :H01J61/00
(31) Priority Document No :NA
(32) Priority Date :NA
(33) Name of priority country :NA
(86) International Application No :NA
Filing Date :NA
(87) International Publication No : NA
(61) Patent of Addition to Application Number :NA
Filing Date :NA
(62) Divisional to Application Number :NA
Filing Date :NA

(71)**Name of Applicant :**
1)VALLAPREDDY PAVAN KUMAR REDDY
Address of Applicant :H.NO: 6-3-596/24/1, FLAT NO. 202, ANJALI ENCLAVE, VENKATRAMANA COLONY, ERAMANZIL, KAIRATHABAD, HYDERABAD - 500 004 Andhra Pradesh India
(72)**Name of Inventor :**
1)VALLAPREDDY PAVAN KUMAR REDDY

(57) Abstract :
Exemplary embodiment of the present disclosure is directed towards to a system for instantly changing a physical state of a matter. The system includes a container for storing liquid state of chemical element comprising a cryogenic temperature and maintained at high pressure. The system also includes a pressure vessel storing gaseous state of chemical element configured to provide input pressure to the container storing liquid state of chemical element through an inlet. The gaseous pressure released into the container expels the stored liquid state of chemical element from the container into one or more mixer appliances comprising a liquid state of a matter through one or more outlets. The received liquid state of the chemical element instantly converts the liquid state of the matter into solid state.

No. of Pages : 11 No. of Claims : 9

(12) PATENT APPLICATION PUBLICATION
(21) Application No.1736/CHE/2014 A
(19) INDIA
(22) Date of filing of Application :01/04/2014
(43) Publication Date : 25/12/2015

(54) Title of the invention : COST EFFECTIVE ATTACHMENTS TO A SUITCASE TO KEEP THE CLOTHES CRUMBLE - FREE

(51) International classification :A45C
(31) Priority Document No :NA
(32) Priority Date :NA
(33) Name of priority country :NA
(86) International Application No :NA
Filing Date :NA
(87) International Publication No : NA
(61) Patent of Addition to Application Number :NA
Filing Date :NA
(62) Divisional to Application Number :NA
Filing Date :NA

(71)**Name of Applicant :**
1)RAGHU RAGHAVAN PILLAI
Address of Applicant :SARANYA, HOUSE NO. 155 UDARASIROMANI ROAD, VELLAYAMBALAM, THIRUVANATHAPURAM - 695 010 Kerala India
(72)**Name of Inventor :**
1)RAGHU RAGHAVAN PILLAI

(57) Abstract :
ABSTRACT A box-file design attachment is provided in the interior of a suitcase, which allows for arranging, transporting and retrieval of clothes, without the clothes getting crumbled. The clothes are arranged and held together like sheets in a box file. By pulling out the holder from its seat, the clothes can be taken out from the suitcase in a bunch. The right cloth can be chosen by flipping them, like sheets in a box file. The chosen cloth can be detached from the holder, and the remaining bunch can be inserted back in the holder. A cable tie helps in arresting the cloth bunch from unnecessary movements inside the suitcase, when the suitcase gets vigorously shaken or dropped during transportation.

No. of Pages : 9 No. of Claims : 6

(12) PATENT APPLICATION PUBLICATION
(21) Application No.1811/CHE/2014 A
(19) INDIA
(22) Date of filing of Application :04/04/2014
(43) Publication Date : 25/12/2015

(54) Title of the invention : SYSTEMS AND METHODS FOR ISOLATING A CONDUIT ENCLOSURE FOR AN ELECTRICAL MOTOR

(51) International classification :H02K 5/00
(31) Priority Document No :13/859456
(32) Priority Date :09/04/2013
(33) Name of priority country :U.S.A.
(86) International Application No :NA
Filing Date :NA
(87) International Publication No : NA
(61) Patent of Addition to Application Number :NA
Filing Date :NA
(62) Divisional to Application Number :NA
Filing Date :NA

(71)**Name of Applicant :**
1)GENERAL ELECTRIC COMPANY
Address of Applicant :1 RIVER ROAD, SCHENECTADY, NEW YORK 12345 U.S.A.
(72)**Name of Inventor :**
1)GARLAPATI, PRAVEEN KUMAR
2)NAIR, SASIDHARAN

(57) Abstract :
ABSTRACT An enclosure system includes a stator enclosure defining an enclosure opening, and an adapter (510) having a first entry port (520), and defines a center cavity (516) having a first volume. Enclosure system includes a conduit enclosure (550) coupled to one or more of stator enclosure and adapter (510). Conduit enclosure (550) includes a base member (552) having at least one side wall (554), a rear wall (556) coupled to side wall (554) and defining a second entry port (560), an interior cavity (558), and a terminal connection block (216) coupled to base member (552) and having at least one terminal (218). Enclosure system includes at least one electrical lead (580) extending from the stator enclosure through first enclosure opening, through first entry port (520), through center cavity (516), through second entry port (560), and into the interior cavity (558). Electrical lead (580) occupies a portion of first volume and leaves a remaining volume. Enclosure system includes sealing compound coupled with adapter (510) such that substantially all of remaining volume is occupied. Fig.7 and fig.8

No. of Pages : 25 No. of Claims : 8

(12) PATENT APPLICATION PUBLICATION
(21) Application No.1774/CHE/2014 A
(19) INDIA
(22) Date of filing of Application :02/04/2014
(43) Publication Date : 25/12/2015

(54) Title of the invention : PHARMACEUTICAL COMPOSITIONS OF LINAGLIPTIN AND PROCESS FOR PREPARATION THEREOF

(51) International classification	:A61K 38/00
(31) Priority Document No	:NA
(32) Priority Date	:NA
(33) Name of priority country	:NA
(86) International Application No	:NA
Filing Date	:NA
(87) International Publication No	: NA
(61) Patent of Addition to Application Number	:NA
Filing Date	:NA
(62) Divisional to Application Number	:NA
Filing Date	:NA

(71)**Name of Applicant :**
1)AUROBINDO PHARMA LTD
Address of Applicant :THE WATER MARK BUILDING, PLOT NO. 11, SURVEY NO. 9, KONDAPUR, HITECH CITY, HYDERABAD - 500 084 Andhra Pradesh India
(72)**Name of Inventor :**
1)VENUGOPALA CHOKKASANDRA JAYARAMAREDDY
2)SREENIVAS REDDY
3)KANDI CHANDRASHEKHAR SHRIRAM
4)MEENAKSHISUNDERAM SIVAKUMARAN

(57) Abstract :
Pharmaceutical compositions comprising an antidiabetic agent as an active agent are provided. The present invention relates to pharmaceutical compositions comprising linagliptin or a pharmaceutically acceptable salt thereof as an active agent. The present invention also relates to process of preparation of pharmaceutical compositions comprising linagliptin or a pharmaceutically acceptable salt thereof. The present invention also relates to method of administering the compositions comprising linagliptin in a subject in need thereof

No. of Pages : 27 No. of Claims : 10

(12) PATENT APPLICATION PUBLICATION
(19) INDIA
(22) Date of filing of Application :02/04/2014
(21) Application No.1775/CHE/2014 A
(43) Publication Date : 25/12/2015

(54) Title of the invention : TRACK-SUPPORTING ROLLER ASSEMBLY FOR A CRAWLER CHASSIS

(51) International classification	:B62D 55/00
(31) Priority Document No	:13001923.5
(32) Priority Date	:12/04/2013
(33) Name of priority country	:EPO
(86) International Application No	:NA
Filing Date	:NA
(87) International Publication No	: NA
(61) Patent of Addition to Application Number	:NA
Filing Date	:NA
(62) Divisional to Application Number	:NA
Filing Date	:NA

(71)**Name of Applicant :**
1)JOSEPH V–GELE AG
Address of Applicant :Joseph-Vgele-Strasse 1, 67067 Ludwigshafen, Germany Germany
(72)**Name of Inventor :**
1)Christian PAWLIK
2)Martin BUSCHMANN
3)Ralf WEISER
4)Arthur BRAUN

(57) Abstract :
The present invention relates to a track-supporting roller assembly (1) for supporting a crawler track (26) of a crawler chassis (22). The track-supporting roller assembly (1) comprises a bearing unit (2) and a track-supporting roller (6) rotatably coupled to the bearing unit (2). According to the invention the track-supporting roller (6) comprises at least one supporting body (7) made of plastic. The supporting body (7) serves as a damper and prevents a metal-on-metal contact between the track chain links of the crawler track and the track-supporting roller. The track-supporting roller assembly (1) according to the invention ensures a reduced noise development in the crawler chassis (22). At the same time, it is possible to also reduce the wear of the track-supporting rollers (6) to a considerable extent. [Figure 1]

No. of Pages : 16 No. of Claims : 15

(12) PATENT APPLICATION PUBLICATION
(21) Application No.185/CHE/2014 A
(19) INDIA
(22) Date of filing of Application :16/01/2014
(43) Publication Date : 25/12/2015

(54) Title of the invention : STAND ALONE TOILET WITH WATER REUSE AND WASTE RECYCLING AND WITHOUT CONNECTION TO SEWAGE AND/OR ELECTRICAL SYSTEMS

(51) International classification :C02F1/02
(31) Priority Document No :NA
(32) Priority Date :NA
(33) Name of priority country :NA
(86) International Application No :NA
Filing Date :NA
(87) International Publication No : NA
(61) Patent of Addition to Application Number :NA
Filing Date :NA
(62) Divisional to Application Number :NA
Filing Date :NA

(71)**Name of Applicant :**
1)RAJASEKARAN SOWMYA
Address of Applicant :SOWMYA RAJASEKARAN, 19/A/6, R.I. FLATS, VENKATESA NAGAR, I MAIN ROAD, EXTENSION II, VIRUGAMBAKKAM, CHENNAI - 600 092 Tamil Nadu India
(72)**Name of Inventor :**
1)RAJASEKARAN SOWMYA

(57) Abstract :
Drawbacks in existing technologies: In brief, existing technologies have one or more of the following drawbacks: (a) require large amount of water, (b) require chemicals that cause irritation or use of proprietary compounds, (c) fairly large pits to be dug for each household for provision of improved sanitation, (d) mechanism and / or manual intervention involved requires more maintenance or risk of user rejection, (e) some form of electricity may be required, (f) risk of bad odor and flies, (g) waste recovery might be difficult to monitor, (h) difficult to ensure complete safety at household level irrespective of remoteness and low access levels of the household, (i) need for secondary treatment, (j) need for offsite treatment, (k) large amount of wastewater is contaminated with pathogens due to fecal discharge, (1) heavy logistics load, (m) nil or sub-optimal recovery of nutrients for use in agriculture, (n) user training and related program management required can be significant resources when implemented at a large scale, (o) does not help with achieving MDG related to environmental sustainability, (p) involves use of worms or micro-organisms which, when program implementation is at a large scale, could have unintended effects on the ecosystem the risks of which cannot be fully foreseen, quantified or mitigated, (q) require community management of waste removal & treatment, (r) not suitable for rural or remote areas, (s) require large investment, (t) risk of disease-causing pathogens contaminating ground water, (u) pathogen die-off at onsite happens over a long period of time, (v) sewerage overflow during monsoons and floods in case of inadequate storm water drainage, (w) minimal or absence of secondary treatment for complete pathogen die-off in low income communities, (x) skilled labor required for installation onsite if the model is not completely prefabricated.

No. of Pages : 28 No. of Claims : 7

(12) PATENT APPLICATION PUBLICATION
(21) Application No.1103/CHE/2014 A
(19) INDIA
(22) Date of filing of Application :04/03/2014
(43) Publication Date : 25/12/2015

(54) Title of the invention : SUBLINGUAL DELIVERY OF INSULIN

(51) International classification :A61K
(31) Priority Document No :NA
(32) Priority Date :NA
(33) Name of priority country :NA
(86) International Application No :NA
Filing Date :NA
(87) International Publication No : NA
(61) Patent of Addition to Application Number :NA
Filing Date :NA
(62) Divisional to Application Number :NA
Filing Date :NA

(71)**Name of Applicant :**
1)SREE CHITRA TIRUNAL INSTITUTE FOR MEDICAL SCIENCES AND TECHNOLOGY
Address of Applicant :Biomedical Technology Wing, Poojappura, Thiruvananthapuram 695 012, India Kerala India
(72)**Name of Inventor :**
1)Chandra Prakash Sharma
2)Kaladhar Kamalasanan

(57) Abstract :
This invention relates to a formulation for sublingnal delivery of insulin comprising crystalline insulin and at least one additive selected from the group :a) salicylic acid or its derivatives, b) mixture of salicylic acid or its derivatives and calcium lactate, c) a permeation enhancer, d) glycine and a polymer composite of sodium carboxymethyl cellulose and colloidal silicon dioxide a polymer composite of sodium carboxy methyl cellulose and colloidal silicone dioxide.

No. of Pages : 12 No. of Claims : 10

(12) PATENT APPLICATION PUBLICATION
(21) Application No.1808/CHE/2014 A
(19) INDIA
(22) Date of filing of Application :04/04/2014
(43) Publication Date : 25/12/2015

(54) Title of the invention : INTEGRATED WATER QUALITY SENSOR WITH WATER PURIFICATION TECHNOLOGY IDENTIFICATION DEVICE

(51) International classification	:C02F 1/00
(31) Priority Document No	:NA
(32) Priority Date	:NA
(33) Name of priority country	:NA
(86) International Application No	:NA
Filing Date	:NA
(87) International Publication No	: NA
(61) Patent of Addition to Application Number	:NA
Filing Date	:NA
(62) Divisional to Application Number	:NA
Filing Date	:NA

(71)**Name of Applicant :**
1)EUREKA FORBES LTD
Address of Applicant :NO. 42, P-3/C, HARALUKUNTE MUNESHWARA LAYOUT, KUDLU, BANGALORE - 560 068 Karnataka India
(72)**Name of Inventor :**
1)DR. ABHAY KUMAR

(57) Abstract :
ABSTRACT OF THE INVENTION The present invention pertains to a water quality sensor device, more particularly to an integrated water TDS (Total Dissolved Solids) sensor with product identification device to enable user selection of water purifiers based on water quality report generated of the water to be purified. The said integrated a water quality sensor and purification/ product identification device comprises at least more than one sensor operatively coupled to a controller, where in the controller is configured to receive a measured input from one or more sensors and a wireless communication device for transmitting data to generate a water quality report. Further, the wireless communicator device is configured to communicate with a co-ordinator more particularly a remote network to store the information received from one or more sensors. In various embodiments, the one or more sensor include a Total dissolved Solids sensor (TDS) and a temperature sensor to sense the quality of the input water. The present invention discloses a method and apparatus for measuring the water quality of the input water and enables the user to select from a list of predetermined choices of water purifier based on the water quality of the input water or the water to be purifier. The said invention enables to store the data of the water quality of the input water and be stored in the remote co-coordinator for further reference as well. Advantageously, the present invention provides an easy and accurate method of selecting the purification technology that is cost effective and provides ideal quality of drinking water.

No. of Pages : 9 No. of Claims : 10

(12) PATENT APPLICATION PUBLICATION
(19) INDIA
(22) Date of filing of Application :16/01/2014
(21) Application No.188/CHE/2014 A
(43) Publication Date : 25/12/2015

(54) Title of the invention : METHOD AND SYSTEM FOR SET TOP BOX CONTROL USING A MOBILE DEVICE

(51) International classification :H04B
(31) Priority Document No :NA
(32) Priority Date :NA
(33) Name of priority country :NA
(86) International Application No :NA
Filing Date :NA
(87) International Publication No : NA
(61) Patent of Addition to Application Number :NA
Filing Date :NA
(62) Divisional to Application Number :NA
Filing Date :NA

(71)**Name of Applicant :**
1)DFYGRAVITI TECHNOLOGIES PVT LTD
Address of Applicant :#20, SHREYAS, F 3, FIRST FLOOR, 3RD MAIN ROAD, TATA SILK FARM, BASAVANGUDI, BANGALORE Karnataka India
(72)**Name of Inventor :**
1)HEMMIGE KRISHNAN, VINAY SIMHA
2)KRISHNASWAMY, BRINDA
3)MANDYAM ANANDANPILLAI, ARAVIND
4)SHRIDHAR, ANKITH MALASHETTY

(57) Abstract :
The present invention provides a method and a system for controlling a set-top box, connecting television to internet to view live videos and movies, and stream video on demand over a cable service provider. The method and system includes receiving a signal by a remote transponder (130). The remote transponder (130) can receive the signal from a mobile (120) associated with a user (110). The received signal includes an identifier. Further, the method and system includes converting the received identifier into a form suitable for the set-top box (140). Furthermore, the method and system includes transmitting the converted form of the received identifier to the set-top box (140).

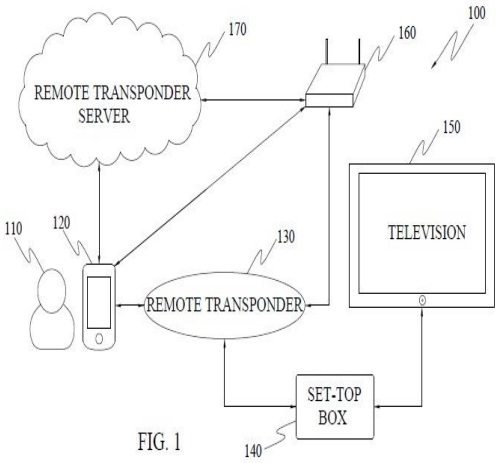

FIG. 1

No. of Pages : 29 No. of Claims : 10

(12) PATENT APPLICATION PUBLICATION
(19) INDIA
(22) Date of filing of Application :16/01/2014

(21) Application No.195/CHE/2014 A
(43) Publication Date : 25/12/2015

(54) Title of the invention : SELF CONTAINED TOILET SYSTEM

(51) International classification :B60B
(31) Priority Document No :NA
(32) Priority Date :NA
(33) Name of priority country :NA
(86) International Application No :NA
Filing Date :NA
(87) International Publication No : NA
(61) Patent of Addition to Application Number :NA
Filing Date :NA
(62) Divisional to Application Number :NA
Filing Date :NA

(71)**Name of Applicant :**
1)SONWALKAR Prakash Tammanna
Address of Applicant :Pradin Technologies Private Limited. J-101, Mantri Woodlands, Bannerghatta Road, Arekere, Bangalore 560076 Karnataka India
2)BINDIGANAVALE Dinesh Ramaswamy
(72)**Name of Inventor :**
1)SONWALKAR Prakash Tammanna
2)BINDIGANAVALE Dinesh Ramaswamy

(57) Abstract :
A self-contained toilet system consisting of a self-cleaning toilet seat, a waste extraction mechanism and a waste sterilization mechanism, using Ultrasound and Ozonisation for effective sterilization and reduction in wash water.

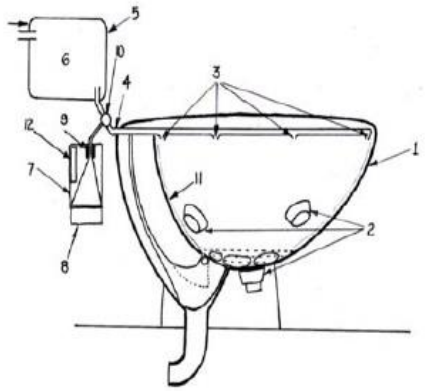

Figure 1

No. of Pages : 13 No. of Claims : 9

(12) PATENT APPLICATION PUBLICATION
(19) INDIA
(22) Date of filing of Application :01/04/2014
(21) Application No.1741/CHE/2014 A
(43) Publication Date : 25/12/2015

(54) Title of the invention : FRAME COVER FOR A TWO WHEELED VEHICLE

(51) International classification :F16F
(31) Priority Document No :NA
(32) Priority Date :NA
(33) Name of priority country :NA
(86) International Application No :NA
Filing Date :NA
(87) International Publication No : NA
(61) Patent of Addition to Application Number :NA
Filing Date :NA
(62) Divisional to Application Number :NA
Filing Date :NA

(71)**Name of Applicant :**
1)TVS MOTOR COMPANY LIMITED
Address of Applicant :JAYALAKSHMI ESTATES • NO.29 (OLD NO.8) HADDOWS ROAD, CHENNAI 600 006 Tamil Nadu India
(72)**Name of Inventor :**
1)THANIKACHALAM GUNALAN
2)RAMANATHAN ANANTHA NARAYANAN
3)MONALISHA MAHARANA
4)DEVENDRA KUMAR

(57) Abstract :
ABSTRACT Given disclosure provides an improved frame cover of a two wheeled vehicle. Said frame cover has atleast one side cover and atleast one rear cover on both sides (left and right) of the vehicle. Said rear cover has common fasteners with the side cover resulting in reducing the parts count. Atleast one press fit locator mountings are provided with the side cover. These press fit location mounting arrangement has damping units to isolate the part from vibration and thus durability of the side cover is improved. Said mechanism also eliminates bottom mounting points from assembly of frame cover that results in a considerable improvement in manufacturing as well as serviceability time and ease. To be accompanied with Figure 4

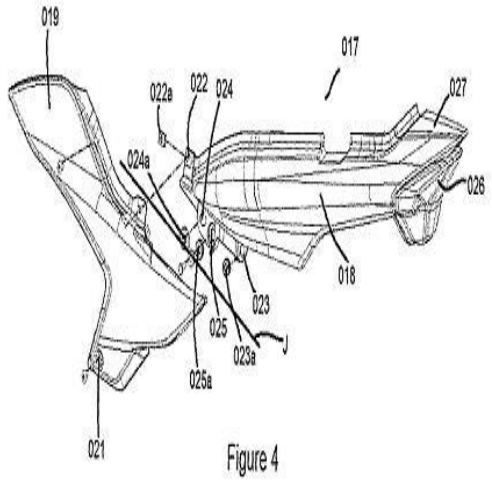

Figure 4

No. of Pages : 16 No. of Claims : 7

(12) PATENT APPLICATION PUBLICATION
(21) Application No.1742/CHE/2014 A
(19) INDIA
(22) Date of filing of Application :01/04/2014
(43) Publication Date : 25/12/2015

(54) Title of the invention : REAR FENDER ASSEMBLY FOR A MOTORCYCLE

(51) International classification :B62J
(31) Priority Document No :NA
(32) Priority Date :NA
(33) Name of priority country :NA
(86) International Application No :NA
Filing Date :NA
(87) International Publication No : NA
(61) Patent of Addition to Application Number :NA
Filing Date :NA
(62) Divisional to Application Number :NA
Filing Date :NA

(71)**Name of Applicant :**
1)TVS MOTOR COMPANY LIMITED
Address of Applicant :JAYALAKSHMI ESTATES • NO.29 (OLD NO.8) HADDOWS ROAD, CHENNAI 600 006 Tamil Nadu India
(72)**Name of Inventor :**
1)THANIKACHALAM GUNALAN
2)RAMANATHAN ANANTHA NARAYANAN
3)DEVENDRA KUMAR
4)MONALISHA MAHARANA

(57) Abstract :
Abstract Rear Fender Assembly for a Motorcycle The present invention relates to a rear fender assembly (30) for a motorcycle. The rear fender assembly (30) described herein includes a first fender member (30a) extending in a motorcycle forward direction and a second fender member (30b) extending in a motorcycle rearward direction, said firs,t fender member (30a) and second fender membe/ (30b) being detachably attached to each other. The second fender member (30b) provided with a wire routing bracket (40) in an inner surface thereof, and at least one extended member (32a) extending towards said first fender member (30a), is adapted to route a wiring harness (41) emerging from a tail light assembly (35) mounted thereto. <To be published with FIG.4>

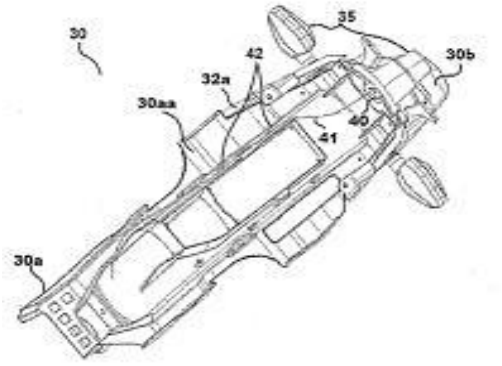

FIG.4

No. of Pages : 21 No. of Claims : 9

(12) PATENT APPLICATION PUBLICATION
(19) INDIA
(22) Date of filing of Application :04/04/2014
(21) Application No.1812/CHE/2014 A
(43) Publication Date : 25/12/2015

(54) Title of the invention : BROKEN ROTOR BAR DETECTION IN ELECTRIC MACHINES

(51) International classification :G10L 25/00
(31) Priority Document No :13/858277
(32) Priority Date :08/04/2013
(33) Name of priority country :U.S.A.
(86) International Application No :NA
Filing Date :NA
(87) International Publication No : NA
(61) Patent of Addition to Application Number :NA
Filing Date :NA
(62) Divisional to Application Number :NA
Filing Date :NA

(71)**Name of Applicant :**
1)GE ENERGY POWER CONVERSION TECHNOLOGY LTD
Address of Applicant :BOUGHTON ROAD, RUGBY, WARWICKSHIRE CV21 1BU U.K.
(72)**Name of Inventor :**
1)GRUBIC, STEFAN
2)NETI, PRABHAKAR
3)ZHANG, PINJIA

(57) Abstract :
ABSTRACT A method for detection of rotor bar faults in an electric machine is provided. The method includes acquiring electrical signals from the electric machine that are representative of the operative condition of the machine. The symmetrical components from the electrical signals are eliminated by squaring an instantaneous value of each data point from the electrical signals and summing the squared values. The method further includes the step of eliminating discontinuities in the electrical signals by applying a window function to compute weighted representation of the squared values. Furthermore, the method includes the step of normalizing the weighted representation to obtain spectral information. The faults in the rotor bar are detected by analyzing the spectral information obtained after normalization. Fig.4

No. of Pages : 25 No. of Claims : 15

(12) PATENT APPLICATION PUBLICATION
(21) Application No.2242/CHENP/2014 A
(19) INDIA
(22) Date of filing of Application :24/03/2014
(43) Publication Date : 25/12/2015

(54) Title of the invention : AN ISOLATED, RECOMBINANT, OR RANDOMLY MUTAGENIZED RICE AHASL1 POLYNUCLEOTIDE MOLECULE

(51) International classification :C12N 15/05
(31) Priority Document No :60/657,968
(32) Priority Date :02/03/2005
(33) Name of priority country :U.S.A.
(86) International Application No :PCT/US2006/07343
Filing Date :28/02/2006
(87) International Publication No : NA
(61) Patent of Addition to Application Number :NA
Filing Date :NA
(62) Divisional to Application Number :4347/CHENP/2007
Filed on :28/02/2006

(71)**Name of Applicant :**
1)INSTITUTO NACIONAL DE TECNOLOGIA AGROPECUARIA
Address of Applicant :of Rivadavia 1439, Buenos Aires, Argentina Argentina
(72)**Name of Inventor :**
1)LIVORE, Alberto, Blas
2)PRINA, Alberto, Raul
3)SINGH, Bijay
4)ASCENZI, Robert
5)WHITT, Sherry, R.

(57) Abstract :
The present invention relates to an isolated, recombinant, or randomly mutagenized rice AHASL1 polynucleotide molecule comprising a nucleotide sequence selected from the group consisting of: (a) the nucleotide sequence set forth in SEQ ID NO:1 or 3; (b) nucleotide sequences encoding the amino acid sequence set forth in SEQ ID NO:2; (c) nucleotide sequences encoding a variant rice AHASL1 protein comprising an aspartate or valine substitution at amino acid position 179 or an equivalent position relative to the amino acid sequence set forth in SEQ ID NO: 2, said substitution having resulted from random mutagenesis; (d) the nucleotide sequences according to (a)(c), further comprising at least one amino acid substitution selected from the group consisting of (i) the alanine at amino acid position 96 or an equivalent position relative to the amino acid sequence set forth in SEQ ID NO:2 is substituted with threonine, (ii) the proline at amino acid position 171 or an equivalent position relative to the amino acid sequence set forth in SEQ ID NO:2 is substituted with alanine, threonine, histidine, leucine, arginine, isoleucine, glutamine, or serine, (iii) the tryptophan at amino acid position 548 or an equivalent position relative to the amino acid sequence set forth in SEQ ID NO:2 is substituted with leucine, and (iv) the serine at 627 or an equivalent position relative to the amino acid sequence set forth in SEQ ID NO:2 is substituted with asparagine, threonine, or phenylalanine; and (e) nucleotide sequences that are fully complementary to any one of the nucleotide sequences set forth in (a)(d).

No. of Pages : 94 No. of Claims : 10

(12) PATENT APPLICATION PUBLICATION
(19) INDIA
(22) Date of filing of Application :01/04/2014
(21) Application No.1734/CHE/2014 A
(43) Publication Date : 25/12/2015

(54) Title of the invention : ULTRASOUND PROBE FOR AUTOMATED MANAGEMENT OF DATA ENTRY FOR A PATIENT

(51) International classification :A61B
(31) Priority Document No :NA
(32) Priority Date :NA
(33) Name of priority country :NA
(86) International Application No :NA
Filing Date :NA
(87) International Publication No : NA
(61) Patent of Addition to Application Number :NA
Filing Date :NA
(62) Divisional to Application Number :NA
Filing Date :NA

(71)**Name of Applicant :**
1)GENERAL ELECTRIC COMPANY
Address of Applicant :1 RIVER ROAD, SCHENECTADY, NEW YORK 12345 U.S.A.
(72)**Name of Inventor :**
1)THATTARI KANDIYIL, JITHIN
2)LAKSHMANAN, NACHIYAPPAN

(57) Abstract :
ABSTRACT A system for automated management of data entry for a patient in an ultrasound device is disclosed. The system includes an ultrasound probe having a wireless reader capable of reading data including one or more of patient information and patient health history from an electronically readable card associated with the patient. Then a controller is present to configure the ultrasound probe for performing the ultrasound scanning based on set-up information and transmit the data to a remote location. A central server is present in the remote location for receiving the data from the controller and communicating the set-up information to the controller based on the data. FIG. 1

No. of Pages : 20 No. of Claims : 20

(12) PATENT APPLICATION PUBLICATION
(21) Application No.1735/CHE/2014 A
(19) INDIA
(22) Date of filing of Application :01/04/2014
(43) Publication Date : 25/12/2015

(54) Title of the invention : PORTABLE DEVICE FOR ACQUIRING MEDICAL DATA CONFIGURABLE BASED ON GEOGRAPHICAL LOCATION

(51) International classification :G01M
(31) Priority Document No :NA
(32) Priority Date :NA
(33) Name of priority country :NA
(86) International Application No :NA
Filing Date :NA
(87) International Publication No : NA
(61) Patent of Addition to Application Number :NA
Filing Date :NA
(62) Divisional to Application Number :NA
Filing Date :NA

(71)**Name of Applicant :**
1)GENERAL ELECTRIC COMPANY
Address of Applicant :1 RIVER ROAD, SCHENECTADY, NEW YORK 12345 U.S.A.
(72)**Name of Inventor :**
1)BAKSHI, TARUN
2)SUNDARAN BABY SAROJAM, SUBIN

(57) Abstract :
ABSTRACT System for dynamically configuring a portable device capable of acquiring medical data from a subject is disclosed. The system includes a location detector for capturing geographical location information of the portable device, and a controller for receiving at least one configuration parameter of the plurality of configuration parameters associated with acquiring the medical data. The geographical location information may be captured using for example a GPS based system and a location based cellular providers. One or more configuration parameters are associated with a current geographical location of the portable device. The configuration parameters may be defined by regulations in the current geographical location (i.e. country) of the portable device. The controller also configures one or more configuration parameter in the portable device. FIGs. 1 and 2

No. of Pages : 20 No. of Claims : 20

(12) PATENT APPLICATION PUBLICATION
(21) Application No.1800/CHE/2014 A
(19) INDIA
(22) Date of filing of Application :04/04/2014
(43) Publication Date : 25/12/2015

(54) Title of the invention : REDUCER SLEEVE WITH THRU COOLANT FLOW AND A CUTTING ASSEMBLY USING SUCH REDUCER SLEEVE

(51) International classification	:F16H 57/00
(31) Priority Document No	:NA
(32) Priority Date	:NA
(33) Name of priority country	:NA
(86) International Application No	:NA
Filing Date	:NA
(87) International Publication No	: NA
(61) Patent of Addition to Application Number	:NA
Filing Date	:NA
(62) Divisional to Application Number	:NA
Filing Date	:NA

(71)**Name of Applicant :**
1)KENNAMETAL INDIA LIMITED
Address of Applicant :8/9th Mile, Tumkur Road, Bangalore-560073, Karnataka, India. Karnataka India
(72)**Name of Inventor :**
1)Santhosha Boregowda Borapura

(57) Abstract :
A reducer sleeve includes a reducer sleeve body that has an axial forward end and an axial rearward end, as well as a flange at the axial forward end thereof. The flange contains a first nozzle. The reducer sleeve body contains a first trough extending from the axial rearward end to the axial forward end. The first trough is in communication with the first nozzle whereby coolant is able to enter the first trough and flow along the first trough and into the first nozzle wherein the coolant is ejected by the first nozzle. FIG.1

No. of Pages : 45 No. of Claims : 22

(12) PATENT APPLICATION PUBLICATION
(19) INDIA
(22) Date of filing of Application :01/04/2014
(21) Application No.2452/CHENP/2014 A
(43) Publication Date : 25/12/2015

(54) Title of the invention : VACUUM PUMP

(51) International classification :F04D
(31) Priority Document No :1627/11
(32) Priority Date :04/10/2011
(33) Name of priority country :Switzerland
(86) International Application No :PCT/CH2012/000222
Filing Date :27/09/2012
(87) International Publication No :WO 2013/049944
(61) Patent of Addition to Application Number :NA
Filing Date :NA
(62) Divisional to Application Number :NA
Filing Date :NA

(71)**Name of Applicant :**
1)MEDELA HOLDING AG
Address of Applicant :Lttichstrasse 4b CH 6340 Baar Switzerland
(72)**Name of Inventor :**
1)FELBER Armin

(57) Abstract :
The invention relates to a vacuum pump for generating a negative pressure comprising a pump chamber (14 15) having an inlet (143) and an outlet (150) wherein the outlet (150) is fitted with a valve (3). According to the invention the pump chamber (14 15) is provided with a pressure sensor (23 23 24). Said vacuum pump has a relatively accurate and inexpensive vacuum sensor. It is additionally advantageous that the sensor being integrated in the pump chamber is largely unsusceptible to interference and requires little space.

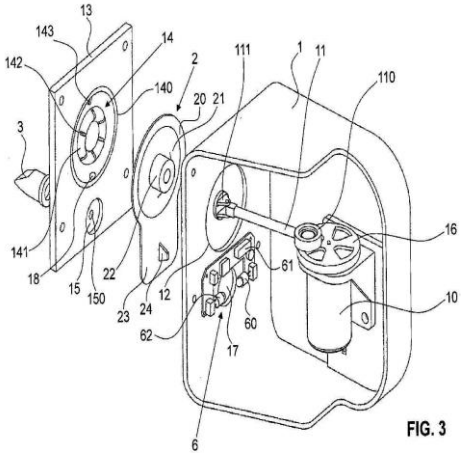

FIG. 3

No. of Pages : 27 No. of Claims : 14

(12) PATENT APPLICATION PUBLICATION
(19) INDIA
(22) Date of filing of Application :03/04/2014
(21) Application No.2529/CHENP/2014 A
(43) Publication Date : 25/12/2015

(54) Title of the invention : SYSTEM AND METHOD FOR CLOUD BASED IMPLEMENTATION OF CONTROL OF FOCUSED OVERLOAD OF SERVICE ELEMENT (COFO SE) VIA EXPLICIT (OR VIRTUALIZED) MACHINE TO MACHINE (M2M) GATEWAY ELEMENT

(51) International classification :G06K
(31) Priority Document No :61/552158
(32) Priority Date :27/10/2011
(33) Name of priority country :U.S.A.
(86) International Application No :PCT/US2012/061645
Filing Date :24/10/2012
(87) International Publication No :WO 2013/063083
(61) Patent of Addition to Application Number :NA
Filing Date :NA
(62) Divisional to Application Number :NA
Filing Date :NA

(71)**Name of Applicant :**
1)ZTE CORPORATION
Address of Applicant :Zte Plaza Keji Road South Hi tech Industrial Park Nanshan District Guangdong Shenzhen 518057 China
2)ZTE (USA) INC.
(72)**Name of Inventor :**
1)KHASNABISH Bhumip

(57) Abstract :
A system and method for cloud based implementation of control of focused overload of service elements is disclosed. Resource blocks are obtained for a signaling part of a service element from a variety of networked resources. The signaling part of the service element controls allocation of resources from a media part of the service element via instructions over virtual private network links. Resource blocks for the media part of the service element are obtained from a variety of networked resources wherein the resource blocks are integrated into a pool and a unified view is presented to the signaling part of the service element. The media part of the service element uses the resource blocks for the applications and services for a specific (e.g. session or transaction length) duration of time and additional borrowed resources are released after successful utilization.

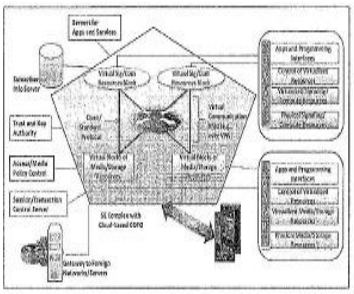

Figure 2

No. of Pages : 18 No. of Claims : 16

(12) PATENT APPLICATION PUBLICATION
(21) Application No.1795/CHE/2014 A
(19) INDIA
(22) Date of filing of Application :03/04/2014
(43) Publication Date : 25/12/2015

(54) Title of the invention : COMPRESSOR

(51) International classification	:F16H 57/00
(31) Priority Document No	:2013-080539
(32) Priority Date	:08/04/2013
(33) Name of priority country	:Japan
(86) International Application No	:NA
Filing Date	:NA
(87) International Publication No	: NA
(61) Patent of Addition to Application Number	:NA
Filing Date	:NA
(62) Divisional to Application Number	:NA
Filing Date	:NA

(71)**Name of Applicant :**
1)Kabushiki Kaisha Kobe Seiko Sho (Kobe Steel, Ltd.)
Address of Applicant :of 2-4, Wakinohama-Kaigandori 2-chome, Chuo-ku, Kobe-shi, Hyogo 651-8585, Japan Japan
(72)**Name of Inventor :**
1)OKUNO, Takashi
2)NAGURA, Kenji

(57) Abstract :
A compressor of the present invention includes a crank shaft, a bearing, a casing, and outer-race gear that is disposed so as to surround the crank shaft, a planetary gear that has a radius of a pitch circle set to a half of a radius of a pitch circle of the outer-race gear and causes the crank shaft to be inserted therethrough so that the planetary gear rotates relative to the crank shaft, a piston that is connected to the planetary gear so as to rotate relative to the planetary gear and moves in a reciprocating manner in the direction parallel to the radial direction of the outer-race gear inside the casing in a manner such that the planetary gear rotates inside the outer-race gear while engaging with the outer-race gear, and a pump that supplies lubricant to the bearing. Here, the pump is accommodated inside the casing.

No. of Pages : 23 No. of Claims : 3

(12) PATENT APPLICATION PUBLICATION
(21) Application No.1796/CHE/2014 A
(19) INDIA
(22) Date of filing of Application :03/04/2014
(43) Publication Date : 25/12/2015

(54) Title of the invention : DEVICE FOR DELIVERING COMPRESSED AIR FOR PNEUMATICALLY OPERATED EQUIPMENT IN MOTOR VEHICLES

(51) International classification	:B60T 8/00	(71)**Name of Applicant :**
(31) Priority Document No	:A 266/2013	**1)MAN Truck & Bus –sterreich AG** Address of Applicant :of Schnauer Str. 5, 4400, Steyr, Austria Austria
(32) Priority Date	:09/04/2013	
(33) Name of priority country	:Austria	(72)**Name of Inventor :**
(86) International Application No	:NA	**1)RAAB, Gottfried**
Filing Date	:NA	**2)LEITENMAYR, Franz**
(87) International Publication No	: NA	**3)KLINGER, Heidrun**
(61) Patent of Addition to Application Number	:NA	
Filing Date	:NA	
(62) Divisional to Application Number	:NA	
Filing Date	:NA	

(57) Abstract :
The invention relates to a device for delivering compressed air for pneumatically operated equipment in motor vehicles, in particular of brake systems in commercial vehicles, whereby compressed air can be tapped via a controllable valve from the combustion chamber of at least one cylinder of an internal combustion engine. In order to provide a device which is advantageous with respect to construction and flow dynamics, the valve (11) is arranged outside the combustion chamber (7) and is connected to the combustion chamber (7), in particular via a connecting passage (10) which opens into the combustion chamber (7).

No. of Pages : 22 No. of Claims : 18

(12) PATENT APPLICATION PUBLICATION
(19) INDIA
(22) Date of filing of Application :03/04/2014
(21) Application No.1797/CHE/2014 A
(43) Publication Date : 25/12/2015

(54) Title of the invention : MANAGEMENT OF RIGHTS AND ROYALTIES ASSOCIATED WITH A MEDIA

(51) International classification	:G06Q 30/00
(31) Priority Document No	:NA
(32) Priority Date	:NA
(33) Name of priority country	:NA
(86) International Application No	:NA
Filing Date	:NA
(87) International Publication No	: NA
(61) Patent of Addition to Application Number	:NA
Filing Date	:NA
(62) Divisional to Application Number	:NA
Filing Date	:NA

(71)**Name of Applicant :**
1)Kalyan C Kankanala
Address of Applicant :A1-1904, Elita Promenade, 18th Main Road, JP Nagar 7th Phase, Bangalore,Karnataka, India-560078 Karnataka India
2)Sharada Kalamadi
3)Somashekar Ramakrishna
4)Nitin Nair
(72)**Name of Inventor :**
1)Kalyan C Kankanala
2)Sharada Kalamadi
3)Somashekar Ramakrishna
4)Nitin Nair

(57) Abstract :
As enclosed

No. of Pages : 23 No. of Claims : 20

(12) PATENT APPLICATION PUBLICATION
(19) INDIA
(22) Date of filing of Application :02/04/2014
(21) Application No.2510/CHENP/2014 A
(43) Publication Date : 25/12/2015

(54) Title of the invention : HYBRID VEHICLE CONTROL DEVICE AND CONTROL METHOD

(51) International classification :B60W10/10,B60K6/48,B60K6/547
(31) Priority Document No :2011193016
(32) Priority Date :05/09/2011
(33) Name of priority country :Japan
(86) International Application No :PCT/JP2012/072577
Filing Date :05/09/2012
(87) International Publication No :WO 2013/035729
(61) Patent of Addition to Application Number :NA
Filing Date :NA
(62) Divisional to Application Number :NA
Filing Date :NA

(71)**Name of Applicant :**
1)HONDA MOTOR CO. LTD.
Address of Applicant :1 1 Minami Aoyama 2 chome Minato ku Tokyo 1078556 Japan
(72)**Name of Inventor :**
1)KAWATA Kohei
2)HONMA Yuki
3)KURODA Shigetaka
4)YAMADA Tetsuya
5)YOKOO Kentaro

(57) Abstract :
Provided are a hybrid vehicle control device and control method that can cause a hybrid vehicle to drive efficiently and thereby can increase fuel efficiency. The hybrid vehicle (V) control device (1) is provided with an ECU (2). The ECU (2) uses an energy (ENE_eng2) transmitted from an internal combustion engine (3) to a driving wheel (DW) during running of the internal combustion engine (3) an energy (ENE_mot2) transmitted from an electric motor (4) to the driving wheel (DW) during running of the electric motor (4) an energy (ENE_mot2) when the driving force of the internal combustion engine (3) during running of the internal combustion energy (3) is converted to electrical energy by means of the generating operation of the electric motor (4) and an energy (ENE_eng1 ENE_eng1+ENE_mot1 ENE_mot1) envisioned to have been supplied to the driving force sources (3 4) as a whole and calculates four combined efficiencies (TE_eng TE_ch TE_asst TE_ev) (step 2) and selects a driving mode that obtains the highest value among the four combined efficiencies (TE_eng TE_ch TE_asst TE_ev) in accordance with a request torque (TRQ) and a vehicle speed (VP).

No. of Pages : 187 No. of Claims : 26

(12) PATENT APPLICATION PUBLICATION
(19) INDIA
(22) Date of filing of Application :04/04/2014
(21) Application No.2590/CHENP/2014 A
(43) Publication Date : 25/12/2015

(54) Title of the invention : ETANERCEPT FORMULATIONS STABILIZED WITH MEGLUMINE

(51) International classification :A61K39/395
(31) Priority Document No :61/548518
(32) Priority Date :18/10/2011
(33) Name of priority country :U.S.A.
(86) International Application No :PCT/US2012/060743
Filing Date :18/10/2012
(87) International Publication No :WO 2013/059408
(61) Patent of Addition to Application Number :NA
Filing Date :NA
(62) Divisional to Application Number :NA
Filing Date :NA

(71)**Name of Applicant :**
1)COHERUS BIOSCIENCES INC.
Address of Applicant :201 Redwood Shores Parkway Suite 200 Redwood City CA 94065 U.S.A.
(72)**Name of Inventor :**
1)MANNING Mark
2)MURPHY Brian

(57) Abstract :
The present invention is an aqueous stabilized formulation of etanercept comprising: etanercept; and stabilizing ingredients to retard instability aggregation and/or fragmentation of the etanercept in the formulation said stabilizing ingredients being comprised of at least one of the following: {a) meglumine; or (b) meglumine in combination with sucrose; or {c) meglumine in combination with sodium chloride; or (d) meglumine in combination with sodium chloride and sucrose. Various technical terms used in the following discussion are defined below in the section entitled Definitions and throughout the remainder of the specification. The stabilized etanercept formulations of the present invention elicit long term storage stability.

No. of Pages : 34 No. of Claims : 11

(12) PATENT APPLICATION PUBLICATION
(19) INDIA
(22) Date of filing of Application :13/03/2014
(21) Application No.1322/CHE/2014 A
(43) Publication Date : 25/12/2015

(54) Title of the invention : A SYSTEM AND METHOD FOR FACE RECOGNITION USING REGULARIZED DISCRIMINANT ANALYSIS

(51) International classification :G06C
(31) Priority Document No :NA
(32) Priority Date :NA
(33) Name of priority country :NA
(86) International Application No :NA
Filing Date :NA
(87) International Publication No : NA
(61) Patent of Addition to Application Number :NA
Filing Date :NA
(62) Divisional to Application Number :NA
Filing Date :NA

(71)**Name of Applicant :**
1)Suresh Jaganathan
Address of Applicant :B1/G1, Durga Apartments No. 2, III Cross, Durga Colony, Sembakam, East Tambaram, Chennai 600073 Tamil Nadu India
2)Karthika Veeramani
(72)**Name of Inventor :**
1)Suresh Jaganathan
2)Karthika Veeramani

(57) Abstract :
Face recognition is one of the biometric authentication systems to determine the identity of the individual. It is disclosed a system and method to enhance the performance of RDA by effectively determining an appropriate regularization parameter in order to reduce error rate and training time. In addition, the computational complexity of calculating the inverse of within-class scatter matrix is reduced by dividing the images into several non-overlapping sub-images of same size. Experiments are done using various benchmark datasets to verify the scalability and effectiveness of our Block Enhanced RDA (BERDA) method and are compared with the state-of-the-art algorithms. Most Illustrative Fig: FIG 1

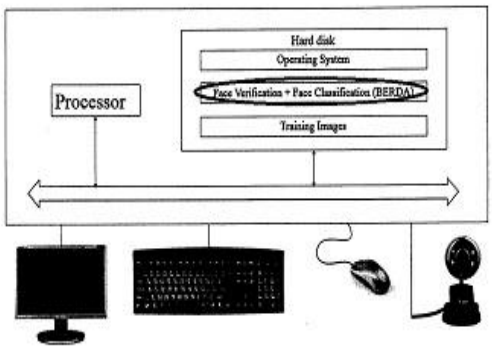

FIG. 1

No. of Pages : 29 No. of Claims : 3

(12) PATENT APPLICATION PUBLICATION
(21) Application No.1517/CHE/2014 A
(19) INDIA
(22) Date of filing of Application :21/03/2014
(43) Publication Date : 25/12/2015

(54) Title of the invention : SCHEDULING ASSIGNMENT MESSAGE DESIGN FOR DEVICE-TO-DEVICE COMMUNICATION

(51) International classification :H04L27/00
(31) Priority Document No :NA
(32) Priority Date :NA
(33) Name of priority country :NA
(86) International Application No :NA
Filing Date :NA
(87) International Publication No : NA
(61) Patent of Addition to Application Number :NA
Filing Date :NA
(62) Divisional to Application Number :NA
Filing Date :NA

(71)**Name of Applicant :**
1)Centre of Excellence in Wireless Technology
Address of Applicant :#152, CSD Building, ESB, IIT Madras Campus, Chennai 600 036 Tamil Nadu India
(72)**Name of Inventor :**
1)Vinod Ramaswamy
2)Sunil Kaimalettu
3)Nadeem Akhtar
4)Ankit Sharma
5)Sarun Selvanesan
6)R Swathi
7)Kalyana Rama Sesha Sayee
8)Bhaskar Ramamurthi

(57) Abstract :
A simple method to indicate the redundancy version of each transmitted block is also proposed. Each transmission of a transport block is accompanied by a reference symbol sequence known to the receiver, which is used for coherent demodulation of the transmitted symbols. The redundancy version of each transmission may be encoded using a pre-defined cyclic shift of the accompanying reference symbol sequence. The cyclic shift may apply to the entire sequence or a part of the sequence. The cyclic shift offset may be zero for the first transmission. The mapping rule between cyclically shifted sequences and redundancy versions that is pre defined, and is known to the receiver. The receivers may blindly decode the reference sequence and identify the redundancy version of the received block. Dated : 21st March, 2014 Signature Name : Arun K Narasani Patent Agent

No. of Pages : 4 No. of Claims : 0

(12) PATENT APPLICATION PUBLICATION
(19) INDIA
(22) Date of filing of Application :03/04/2014
(21) Application No.1789/CHE/2014 A
(43) Publication Date : 25/12/2015

(54) Title of the invention : A CRYSTALLINE FORM OF TIOTROPIUM BROMIDE

(51) International classification	:C07D 451/00
(31) Priority Document No	:13162817.4
(32) Priority Date	:08/04/2013
(33) Name of priority country	:EPO
(86) International Application No	:NA
Filing Date	:NA
(87) International Publication No	: NA
(61) Patent of Addition to Application Number	:NA
Filing Date	:NA
(62) Divisional to Application Number	:NA
Filing Date	:NA

(71)**Name of Applicant :**
1)CERBIOS-PHARMA SA
Address of Applicant :of Via Figino 6, CH-6917, Barbengo/Lugano, Switzerland Switzerland
(72)**Name of Inventor :**
1)MEREU, Andrea
2)MOROSOLI, Moreno
3)PENNE', Umberto
4)PERSEGHINI, Mauro

(57) Abstract :
A stable crystalline form of tiotropium bromide, and a process for its preparation with high purity.

No. of Pages : 15 No. of Claims : 10

(12) PATENT APPLICATION PUBLICATION
(21) Application No.1790/CHE/2014 A
(19) INDIA
(22) Date of filing of Application :03/04/2014
(43) Publication Date : 25/12/2015

(54) Title of the invention : MOTOR, ITS TRANSPORTATION PROTECTION DEVICE, AND TRANSPORTATION PROTECTION METHOD

(51) International classification	:F16C 33/00
(31) Priority Document No	:2013-080238
(32) Priority Date	:08/04/2013
(33) Name of priority country	:Japan
(86) International Application No	:NA
Filing Date	:NA
(87) International Publication No	: NA
(61) Patent of Addition to Application Number	:NA
Filing Date	:NA
(62) Divisional to Application Number	:NA
Filing Date	:NA

(71)**Name of Applicant :**
1)TOSHIBA MITSUBISHI-ELECTRIC INDUSTRIAL SYSTEMS CORPORATION
Address of Applicant :of 13-16, Mita 3-chome, Minato-ku, Tokyo 108-0073, Japan Japan
(72)**Name of Inventor :**
1)KITAYUGUCHI, Kazuya

(57) Abstract :
According to an embodiment, an electric motor transportation protection device is detachably mounted on an electric motor. The electric motor includes: a rotating shaft that has a recess in a side surface and extends horizontally, a bearing that rotatably supports the rotating shaft, a bracket that supports the bearing, and an outer slinger that is attached to the bracket and which the rotating shaft penetrates. The electric motor transportation protection device has: a mounting member that is detachably mounted on the outer slinger and has a screw rod through hole; a screw rod that penetrates through the screw rod through hole; and a screw rod fixing member that can temporarily fix the screw rod to the mounting member with the screw rod through the screw rod through hole and with an end of the screw rod pressed against the recess of the rotating shaft so that rotation of the rotating shaft is prevented.

No. of Pages : 15 No. of Claims : 6

(12) PATENT APPLICATION PUBLICATION
(19) INDIA
(22) Date of filing of Application :04/04/2014

(21) Application No.2594/CHENP/2014 A
(43) Publication Date : 25/12/2015

(54) Title of the invention : COMPOUNDS AND METHODS FOR ENHANCING INNATE IMMUNE RESPONSES

(51) International classification :A61K31/437
(31) Priority Document No :61/549784
(32) Priority Date :21/10/2011
(33) Name of priority country :U.S.A.
(86) International Application No :PCT/US2012/060971
Filing Date :19/10/2012
(87) International Publication No :WO 2013/059559
(61) Patent of Addition to Application Number :NA
Filing Date :NA
(62) Divisional to Application Number :NA
Filing Date :NA

(71)**Name of Applicant :**
1)GLAXOSMITHKLINE LLC
Address of Applicant :5 Crescent Drive Philadelphia PA 19112 U.S.A.
(72)**Name of Inventor :**
1)BANKA Anna Lindsey
2)BOTYANSZKI Janos
3)BURROUGHS Eric Gregory
4)CATALANO John George
5)CHERN Wendy Huang
6)DICKSON Hamilton D.
7)GARTLAND Margaret J.
8)HAMATAKE Robert
9)HOFLAND Hans
10)KEICHER Jesse Daniel
11)MOORE Christopher Brooks
12)SHOTWELL John Bradford
13)TALLANT Matthew David
14)THERRIEN Jean Philippe
15)YOU Shihyun

(57) Abstract :
Provided are certain compounds and pharmaceutically acceptable salts thereof their pharmaceutical compositions their methods of preparation and their use for treating viral infections. The present invention relates to compounds that act as enhancers of the host s immune response. The compounds are believed to up regulate expression and/or activity of one or more of these proteins thereby leading to better viral defense and/or treatment.

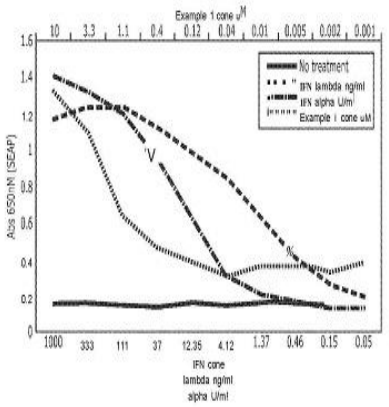

Figure 1

No. of Pages : 224 No. of Claims : 67

(12) PATENT APPLICATION PUBLICATION
(21) Application No.10859/CHENP/2012 A
(19) INDIA
(22) Date of filing of Application :27/12/2012
(43) Publication Date : 25/12/2015

(54) Title of the invention : CURRENT COLLECTOR FOR NONAQUEOUS ELECTROLYTE BATTERY ELECTRODE FOR NONAQUEOUS ELECTROLYTE BATTERY AND NONAQUEOUS ELECTROLYTE BATTERY

(51) International classification	:H01M 4/66 , H01M 4/06 , H01M 4/13
(31) Priority Document No	:2010-123830
(32) Priority Date	:31/05/2010
(33) Name of priority country	:Japan
(86) International Application No	:PCT/JP2011/061780
Filing Date	:23/05/2011
(87) International Publication No	: NA
(61) Patent of Addition to Application Number	:NA
Filing Date	:NA
(62) Divisional to Application Number	:NA
Filing Date	:NA

(71)**Name of Applicant :**
1)SUMITOMO ELECTRIC INDUSTRIES LTD.
Address of Applicant :5-33 Kitahama 4-chome Chuo-ku Osaka-shi Osaka 5410041 Japan Japan
(72)**Name of Inventor :**
1)OTA Nobuhiro
2)HOSOE Akihisa
3)MAJIMA Masatoshi
4)NITTA Koji

(57) Abstract :
To provide a current collector for a nonaqueous electrolyte battery capable of improving the discharge capacity and charge/discharge efficiency of a battery, in which the content of oxygen in the surface of an aluminum porous body is low. The current collector for a nonaqueous electrolyte battery is made of an aluminum porous body, and the content of oxygen in the surface of the aluminum porous body is 3.1% by mass or less. Further, the aluminum porous body is made of an aluminum alloy containing at least one element selected from the group consisting of Cr, Mn and transition metal elements. The aluminum porous body can be prepared by a production method in which, after an aluminum alloy layer 2 is formed on the surface of a resin 1 of a resin body 1f having continuous pores, the resin body is heated to a temperature of the melting point of the aluminum alloy or less to thermally decompose the resin body 1f (resin 1) while applying a potential lower than the standard electrode potential of aluminum to the aluminum alloy layer 2 with the resin body (aluminum alloy layer-coated resin body 3) dipped in a molten salt.

No. of Pages : 43 No. of Claims : 7

(12) PATENT APPLICATION PUBLICATION
(19) INDIA
(22) Date of filing of Application :01/04/2014
(21) Application No.1745/CHE/2014 A
(43) Publication Date : 25/12/2015

(54) Title of the invention : MUFFLER COVER FOR A SCOOTER TYPE MOTORCYCLE

(51) International classification :B62J
(31) Priority Document No :NA
(32) Priority Date :NA
(33) Name of priority country :NA
(86) International Application No :NA
Filing Date :NA
(87) International Publication No : NA
(61) Patent of Addition to Application Number :NA
Filing Date :NA
(62) Divisional to Application Number :NA
Filing Date :NA

(71)**Name of Applicant :**
1)TVS MOTOR COMPANY LIMITED
Address of Applicant :JAYALAKSHMI ESTATES • NO.29 (OLD NO.8) HADDOWS ROAD, CHENNAI 600 006 Tamil Nadu India
(72)**Name of Inventor :**
1)MALUVADU SUNDARAMAN ANANDKUMAR
2)BOOBALAN MANI
3)KANNAN KARTHIKEYAN
4)VAIDYANATHAN BALAJI

(57) Abstract :
The present subject matter discloses a scooter type motorcycle (1) with a side cover (42) on each side of the longitudinal axis at a rear portion and an exhaust system comprising an exhaust pipe (49), a muffler (50) and a muffler cover covering an external surface of a body of the muffler (50). The muffler cover further includes an upper cover (53) and a lower cover (51) which substantially cover the muffler to protect a pillion rider for any burns. The upper cover (53) is supported on the body of the muffler at least at three points. The lower portion (56) of the upper cover (53) is jointly supported with the lower cover (51) on and secured to the body of the muffler through at least two holding members (57a, 57b). [Abstract to be published with FIG. 6]

No. of Pages : 22 No. of Claims : 7

(12) PATENT APPLICATION PUBLICATION
(19) INDIA
(22) Date of filing of Application :29/01/2014
(21) Application No.377/CHE/2014 A
(43) Publication Date : 25/12/2015

(54) Title of the invention : STEERING CONTROL MECHNISM FOR A THREE WHEELED VEHICLE

(51) International classification :B62D
(31) Priority Document No :NA
(32) Priority Date :NA
(33) Name of priority country :NA
(86) International Application No :NA
Filing Date :NA
(87) International Publication No : NA
(61) Patent of Addition to Application Number :NA
Filing Date :NA
(62) Divisional to Application Number :NA
Filing Date :NA

(71)**Name of Applicant :**
1)M/S TVS MOTOR COMPANY LIMITED
Address of Applicant :NO. 29, HADDOWS ROAD, CHENNAI - 600 006 Tamil Nadu India
(72)**Name of Inventor :**
1)MOSALI NAGARJUN REDDY
2)VADIVELOU JEYAMURUGAN
3)GOKUL MEENAKSHI SUNDARAM

(57) Abstract :
The present invention illustrates an adjustment mechanism to control left side and right side pulling of a three wheeled vehicle. It employs the same front fork steering column assembly as used currently comprising of the steering column assembly, shock absorber and trailing arm front 6. But the steering column assembly of the present invention contains a preset camber and in addition to that the trailing arm assembly 5 is provided with an inbuilt adjustment mechanism to have a variable wheel offset 16. With this mechanism, it becomes easier to adjust the wheel offset 16 and have a better directional stability and a good vehicle handling whenever the vehicle pulls. Figure 1

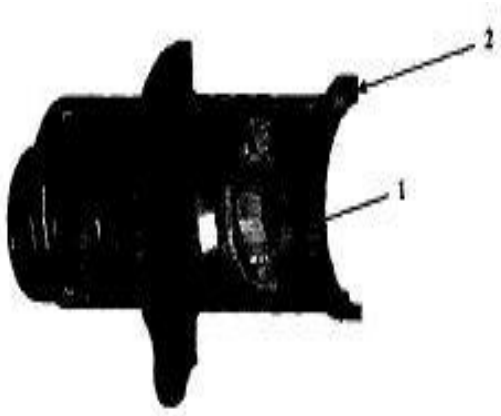

Figure 1

No. of Pages : 14 No. of Claims : 6

(12) PATENT APPLICATION PUBLICATION
(19) INDIA
(22) Date of filing of Application :29/08/2013

(21) Application No.3863/CHE/2013 A
(43) Publication Date : 25/12/2015

(54) Title of the invention : A METHOD FOR IDENTIFYING AND ASSIGNING CHARACTERISTICS TO AN IMAGE IN AN AUTOMATED CONTROL SYSTEM

(51) International classification :G06F
(31) Priority Document No :NA
(32) Priority Date :NA
(33) Name of priority country :NA
(86) International Application No :NA
Filing Date :NA
(87) International Publication No : NA
(61) Patent of Addition to Application Number :NA
Filing Date :NA
(62) Divisional to Application Number :NA
Filing Date :NA

(71)**Name of Applicant :**
1)SCHNEIDER ELECTRIC INDUSTRIES SAS
Address of Applicant :35, RUE JOSEPH MONIER, F-92500 RUEIL MALMAISON France
(72)**Name of Inventor :**
1)AMIT KULKARNI
2)SUDARSAN SRINIVASAN

(57) Abstract :
A method for identifying and assigning characteristics to a new image in an automated monitoring and controlling system (102) is provided. The method includes the steps of: (i) comparing (206, 210), at an image comparison unit (106), the new image with one or more images stored in a database (116) to obtain a set of similar images, based on one or more techniques, (ii) computing (208, 212), at a weight computation unit (110), a weight for each of the set of similar images obtained from the image comparison unit for each of the one or more techniques, (iii) displaying (214) the set of similar images along with the weight obtained in each of the one or more techniques and (iv) assigning (218), at a characteristics assignment unit (114), the characteristics corresponds to the similar image selected in the display to the new image. Figure 1

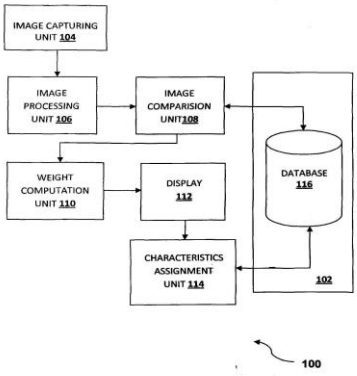

FIG.1

No. of Pages : 17 No. of Claims : 7

(12) PATENT APPLICATION PUBLICATION
(21) Application No.1397/CHE/2014 A
(19) INDIA
(22) Date of filing of Application :17/03/2014
(43) Publication Date : 25/12/2015

(54) Title of the invention : CLEARER ROLLER HOLDER

(51) International classification :D01H
(31) Priority Document No :00647/13
(32) Priority Date :22/03/2013
(33) Name of priority country :Switzerland
(86) International Application No :NA
Filing Date :NA
(87) International Publication No : NA
(61) Patent of Addition to Application Number :NA
Filing Date :NA
(62) Divisional to Application Number :NA
Filing Date :NA

(71)**Name of Applicant :**
1)MASCHINENFABRIK RIETER AG
Address of Applicant :of Klosterstrasse 20, CH-8406 Winterthur, Switzerland Switzerland
(72)**Name of Inventor :**
1)ROBERT, Ngeli
2)LUDEK, Malina
3)GABRIEL, Schneider

(57) Abstract :
The invention relates to a device (1) for cleaning roller surfaces (3a, 3b) of rollers (4a, 4b) that are arranged one behind the other at a radial distance (b) from one another for processing fiber material (F) on a textile machine, comprising a clearer roller (15) that is received in a guide (7) of a clearer roller holder (2), wherein said guide (7) is acted on by a spring element (6), whereby the clearer roller (15) is pressed via a pressing force (AK) against the roller surfaces (3a, 3b) of the adjacent rollers (4a, 4b). In order that by swiveling a top roller support arm (12) upwards, the clearer roller (15) is lifted off the roller surfaces (3a, 3b) to be cleaned and is able to adapt to different diameter ratios (Db/Da) of the rollers (4a, 4b) so that a consistent pressure distribution on the roller surfaces (3a, 3b) to be cleaned is ensured, the longitudinal direction (L) of the guide (7) runs at a distance (a) to a plane (E) in which lie the two axes (1 9a, 1 9b) of the rollers (4a, 4b) that are arranged at a radial distance (b) from one another. (Fig. 1)

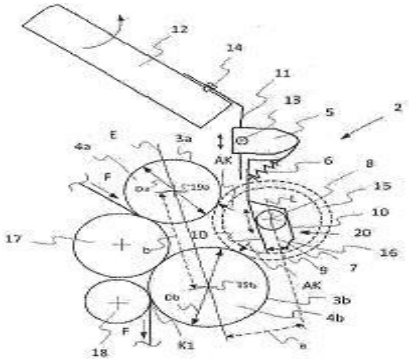

Figure 1

No. of Pages : 13 No. of Claims : 7

(12) PATENT APPLICATION PUBLICATION
(19) INDIA
(22) Date of filing of Application :03/04/2014
(21) Application No.1799/CHE/2014 A
(43) Publication Date : 25/12/2015

(54) Title of the invention : SOFTPHONE OVER DESKTOP-AS-A-SERVICE (DAAS)

(51) International classification :H04M
(31) Priority Document No :NA
(32) Priority Date :NA
(33) Name of priority country :NA
(86) International Application No :NA
Filing Date :NA
(87) International Publication No : NA
(61) Patent of Addition to Application Number :NA
Filing Date :NA
(62) Divisional to Application Number :NA
Filing Date :NA

(71)**Name of Applicant :**
1)VMWARE, INC.
Address of Applicant :3401 Hillview Avenue, Palo Alto, CA 94304, United States of America U.S.A.
(72)**Name of Inventor :**
1)SIVAPRASAD KUNDOOR GOVINDANKUTTY
2)JUBISH KULATHUMKAL JOSE

(57) Abstract :
Techniques for delivering telephone access are provided. In one embodiment, a server system can determine a telephone number assigned to a user operating a client device. The server system can further retrieve, based on the telephone number, softphone configuration data from a telephony service, where the softphone configuration data enables a softphone associated with the client device to register itself, and the telephone number, with the telephony service. The server system can then transmit the softphone configuration data to the client device. [FIG.4]

No. of Pages : 33 No. of Claims : 10

(12) PATENT APPLICATION PUBLICATION
(19) INDIA
(22) Date of filing of Application :04/04/2014
(21) Application No.2593/CHENP/2014 A
(43) Publication Date : 25/12/2015

(54) Title of the invention : METHOD AND APPARATUS FOR BLOCK BASED SIGNIFICANCE MAP AND SIGNIFICANCE GROUP FLAG CONTEXT SELECTION

(51) International classification :H04N7/24
(31) Priority Document No :61/582725
(32) Priority Date :03/01/2012
(33) Name of priority country :U.S.A.
(86) International Application No :PCT/CN2012/085034
Filing Date :22/11/2012
(87) International Publication No :WO 2013/102380
(61) Patent of Addition to Application Number :NA
Filing Date :NA
(62) Divisional to Application Number :NA
Filing Date :NA

(71)**Name of Applicant :**
1)MEDIATEK INC.
Address of Applicant :No.1 Dusing Rd. 1st Science Based Industrial Park Hsin Chu Taiwan China
(72)**Name of Inventor :**
1)HSU Chih Wei
2)CHUANG Tzu Der
3)CHEN Ching Yeh
4)HUANG Yu Wen

(57) Abstract :
A method and apparatus for significance map context selection are disclosed. According to the present invention the TUs are divided into sub blocks and at least two context sets are used. Non DC transform coefficients in each sub block are coded based on the same context context set or context formation. The context context set or context formation for each sub block can be determined based on sub block index in scan order horizontal sub block index vertical sub block index video component type TU width TU height or any combination of the above. In one embodiment the sum of the horizontal and the vertical sub block indexes is used to classify each sub block into a class and the context context set or context formation is then determined according to the class.

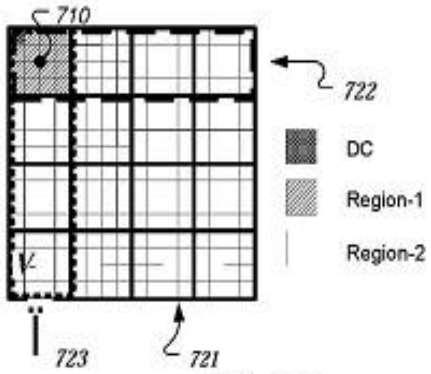

Fif.7A

No. of Pages : 21 No. of Claims : 20

(12) PATENT APPLICATION PUBLICATION
(19) INDIA
(22) Date of filing of Application :29/10/2013
(21) Application No.4875/CHE/2013 A
(43) Publication Date : 25/12/2015

(54) Title of the invention : A METHOD AND SYSTEM USING TERNARY SEQUENCES FOR SIMULTANEOUS TRANSMISSION TO COHERENT AND NON-COHERENT RECIEVERS

(51) International classification :G08B
(31) Priority Document No :NA
(32) Priority Date :NA
(33) Name of priority country :NA
(86) International Application No :NA
Filing Date :NA
(87) International Publication No : NA
(61) Patent of Addition to Application Number :NA
Filing Date :NA
(62) Divisional to Application Number :NA
Filing Date :NA

(71)**Name of Applicant :**
1)SAMSUNG R&D INSTITUTE INDIA BANGALORE PRIVATE LIMITED
Address of Applicant :# 2870, ORION Building, Bagmane Constellation Business Park, Outer Ring Road, Doddanakundi Circle, Marathahalli Post, Bangalore -560037, Karnataka, India Karnataka India
(72)**Name of Inventor :**
1)JOS, Sujit
2)THEJASWI PS, Chandrashekar
3)BYNAM, Kiran
4)HONG, Young-Jun
5)PARK, ChangSoon
6)CHOUDHARY, MANOJ

(57) Abstract :
The present invention describes a method and system for simultaneous transmission of data to coherent and non-coherent receivers. The method at the transmitter includes retrieving a base ternary sequence having a pre-defined length, obtaining one or more ternary sequences corresponding to data to be transmitted and transmitting the obtained one or more ternary sequences by the transmitter. The method steps at the receiver includes receiving one or more ternary sequences corresponding to the data transmitted, demodulating each of the received ternary sequences by correlating with all cyclic shifts of the base ternary sequence by the receiver if the receiver is a coherent receiver, demodulating each of the received ternary sequences by correlating with all cyclic shifts of the absolute of the base ternary sequence by the receiver if the receiver is a non-coherent receiver and detecting the transmitted data based on the cyclic shifts corresponding to maximum correlation values.

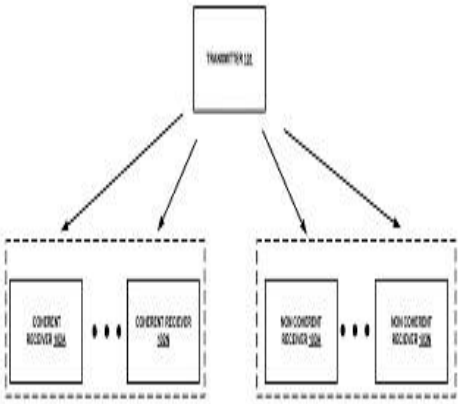

FIGURE 1

No. of Pages : 47 No. of Claims : 28

(12) PATENT APPLICATION PUBLICATION
(19) INDIA
(22) Date of filing of Application :21/03/2014

(21) Application No.1520/CHE/2014 A
(43) Publication Date : 25/12/2015

(54) Title of the invention : Method and system for a user subscription based dispensing

(51) International classification :B60B
(31) Priority Document No :NA
(32) Priority Date :NA
(33) Name of priority country :NA
(86) International Application No :NA
Filing Date :NA
(87) International Publication No : NA
(61) Patent of Addition to Application Number :NA
Filing Date :NA
(62) Divisional to Application Number :NA
Filing Date :NA

(71)**Name of Applicant :**
1)SASTRA University
Address of Applicant :Tirumalaisamudram, Thanjavur 613 401, Tamil Nadu, India Tamil Nadu India
(72)**Name of Inventor :**
1)KUMARESH, K. J.
2)RAGHUNARAYANAN, S.
3)MANIGANDAN, N. S.

(57) Abstract :
A method and a system (200) for a user subscription based dispensing system for dispensing at least one object has been disclosed. The method includes receiving a first request from a first user, wherein the first request comprises at least one parameter and usage of at least one electronic media. The first user is authenticated based on said first request. Subscription details associated with said first user based on the authentication are displayed, wherein said subscription detail comprises at least one object linked with a pre-defined quantity. A second request is received from the first user for dispensing the at least one object by at least one quantity. At least one requested object is dispensed by said requested quantity in accordance with a pre-determined rule associated with said subscription details. Thereafter, said first user is notified about said dispensing.

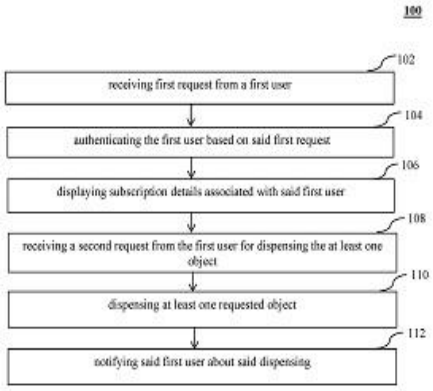

Fig. 1

No. of Pages : 19 No. of Claims : 16

(12) PATENT APPLICATION PUBLICATION
(21) Application No.1791/CHE/2014 A
(19) INDIA
(22) Date of filing of Application :03/04/2014
(43) Publication Date : 25/12/2015

(54) Title of the invention : CATALYTIC CONVERTER HOUSING

(51) International classification	:F01N 13/00
(31) Priority Document No	:NA
(32) Priority Date	:NA
(33) Name of priority country	:NA
(86) International Application No	:NA
Filing Date	:NA
(87) International Publication No	: NA
(61) Patent of Addition to Application Number	:NA
Filing Date	:NA
(62) Divisional to Application Number	:NA
Filing Date	:NA

(71)**Name of Applicant :**
1)TVS MOTOR COMPANY LIMITED
Address of Applicant :JAYALAKSHMI ESTATES • NO.29 (OLD NO.8) HADDOWS ROAD, CHENNAI 600 006 Tamil Nadu India
(72)**Name of Inventor :**
1)VAIDYANATHAN BALAJI
2)BOOBALAN MANI
3)MALUVADU SUNDARAMAN ANANDKUMAR
4)KRISHNABHATTA NAGARAJA

(57) Abstract :
ABSTRACT An exhaust system with an exhaust pipe (17) which provides path for passage of exhaust gases is connected to an extension tube (51). The two ends of the said extension tube (51) have one end mated to the exhaust pipe (17) and the other end (61) is curled. The said extension tube (51) accommodates a catalytic convenor housing. The said extension tube (51) has atleast one local squeezing or compression in the radial direction in between the said first end mated to the said exhaust pipe (17) and the curled end (61) to restrict the movement of the catalytic convertor (33) which is housed inside the said extension tube (17).

No. of Pages : 16 No. of Claims : 4

(12) PATENT APPLICATION PUBLICATION
(21) Application No.4256/CHE/2013 A
(19) INDIA
(22) Date of filing of Application :20/09/2013
(43) Publication Date : 25/12/2015

(54) Title of the invention : A RECONFIGURABLE REDIO ACCESS NODE

(51) International classification :H04W
(31) Priority Document No :NA
(32) Priority Date :NA
(33) Name of priority country :NA
(86) International Application No :NA
Filing Date :NA
(87) International Publication No : NA
(61) Patent of Addition to Application Number :NA
Filing Date :NA
(62) Divisional to Application Number :NA
Filing Date :NA

(71)**Name of Applicant :**
1)TEJAS NETWORKS LIMITED
Address of Applicant :PLOT NO. 25, JP SOFTWARE PARK ELECTRONICS CITY, PHASE-1 HOSUR ROAD BANGALORE - 560100 Karnataka India
(72)**Name of Inventor :**
1)RENE ABRAHAM

(57) Abstract :
A reconfigurable radio access node and a method for configuring and operating a reconfigurable radio access node have been disclosed. The reconfigurable radio access node cooperates with a plurality of user equipments through bi-directional radio links. The radio access node cooperates with a core network via a serving radio base station. The radio access node is adapted to be selectively configured and operated in a mode selected from the group consisting of optical backhaul mode, radio backhaul mode, base station mode and relay mode, thereby providing for selectively optimization either in terms of optimal network coverage or in terms of capacity. 9 Claims, 5 Drawing Sheets

No. of Pages : 28 No. of Claims : 9

(12) PATENT APPLICATION PUBLICATION
(19) INDIA
(22) Date of filing of Application :30/10/2013
(21) Application No.4896/CHE/2013 A
(43) Publication Date : 25/12/2015

(54) Title of the invention : A METHOD TO IDENTITY VERIFICATION USING ASYMMETRIC KEYS IN A WIRELESS DIRECT COMMUNICATION NETWORK

(51) International classification :G06C
(31) Priority Document No :NA
(32) Priority Date :NA
(33) Name of priority country :NA
(86) International Application No :NA
Filing Date :NA
(87) International Publication No : NA
(61) Patent of Addition to Application Number :NA
Filing Date :NA
(62) Divisional to Application Number :NA
Filing Date :NA

(71)**Name of Applicant :**
1)Samsung R & D Institute India- Bangalore Private Limited
Address of Applicant :# 2870, Orion Building, Bagmane Constellation Business Park, Outer Ring Road, Doddanekundi Circle, Marathahalli Post, Bangalore-560037 Karnataka India
(72)**Name of Inventor :**
1)Rajavelsamy Rajadurai
2)Anil Agiwal

(57) Abstract :
A method for verifying identity of a direct communication message using asymmetric keys in a wireless communication network comprising a plurality of electronic devices is provided. The method includes distributing a public key associated with a second electronic device among a plurality 5 of electronic devices by a Device-to-Device (D2D) server. The method includes receiving the direct communication message from the second electronic device at a first electronic device. The direct communication message comprises a digital signature generated using a private key associated with the second electronic device. Further, the method includes 10 verifying the identity of the direct communication message using the public key associated with the second electronic device.

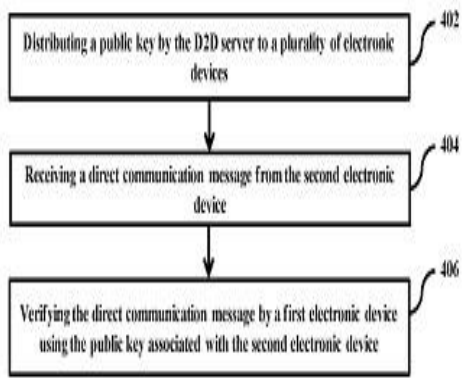

FIG.4

No. of Pages : 77 No. of Claims : 30

(12) PATENT APPLICATION PUBLICATION
(21) Application No.1444/CHE/2014 A
(19) INDIA
(22) Date of filing of Application :19/03/2014
(43) Publication Date : 25/12/2015

(54) Title of the invention : CELL CULTURE PROCESS

(51) International classification :C07D
(31) Priority Document No :NA
(32) Priority Date :NA
(33) Name of priority country :NA
(86) International Application No :NA
Filing Date :NA
(87) International Publication No : NA
(61) Patent of Addition to Application Number :NA
Filing Date :NA
(62) Divisional to Application Number :NA
Filing Date :NA

(71)**Name of Applicant :**
1)Dr. Reddy™s Laboratories Limited
Address of Applicant :8-2-337, Road No. 3, Banjara Hills, Hyderabad, Andhra Pradesh, India Andhra Pradesh India
(72)**Name of Inventor :**
1)Guru Thuduppathy
2)P. Madhava Ram
3)Prafulla Mahajan
4)Rekha Hariharan
5)Rojan Jose
6)Hepshiba Jobin

(57) Abstract :
The invention discloses a cell culture process comprising culturing cells in the presence of betaine to obtain a glycoprotein with a glycoform composition comprising increased percentage of afucosylated glycans. Further, the invention discloses a cell culture process comprising manganese, galactose and betaine for obtaining a glycoprotein with a glycoform composition comprising target values of mannosylated, galactosylated and afucosylated glycans.

No. of Pages : 26 No. of Claims : 7

(12) PATENT APPLICATION PUBLICATION
(21) Application No.1783/CHE/2014 A
(19) INDIA
(22) Date of filing of Application :02/04/2014
(43) Publication Date : 25/12/2015

(54) Title of the invention : A METHOD FOR SPINNING-IN ON A SPINNING MACHINE, PARTICULARLY ON AN AIR-JET SPINNING MACHINE OR AN OPEN-END SPINNING MACHINE

(51) International classification	:D01H
(31) Priority Document No	:PV 2013-275
(32) Priority Date	:09/04/2013
(33) Name of priority country	:Czech Republic
(86) International Application No	:NA
Filing Date	:NA
(87) International Publication No	: NA
(61) Patent of Addition to Application Number	:NA
Filing Date	:NA
(62) Divisional to Application Number	:NA
Filing Date	:NA

(71)**Name of Applicant :**
1)Rieter CZ s.r.o.
Address of Applicant :of Moravska 519, 562 01, Usti Nad Orlici, Czech Republic Czech Republic
(72)**Name of Inventor :**
1)STANCL, Jiri
2)SKRIVANEK, Vladimir
3)HAJEK, Ladislav

(57) Abstract :
The invention relates to a method for spinning-in on a spinning machine, particularly on an air-jet spinning machine or an open-end spinning machine, containing a plurality of spinning units (11 to 34), provided with individual drives, which are divided into groups (1 to 3), where the spinning units (11 to 34) of each group (1 to 3) are supplied by common power supply (10 to 30), whereby the spinning machine is equipped with at least one service device (5), capable of moving along the row of the spinning units (ii to 34) and of spinning-in of each of them. The principle of this method than consists in that during the process of sequential spinning-in of the spinning units (11 to 34) of respective serviced group (1 to 3) the actual load of the power supply (10 to 30) of individual groups (1 to 3) of spinning units (11 to 34) is monitored and after achieving or exceeding a predetermined value of its load the spinning-in process of the respective group (1 to 3) of the spinning units (ii to 34) is interrupted and the spinning-in of another group (1 to 3) of the spinning units (ii to 34) is started, the current load of the power supply (10 to 30) of which is lower than the predetermined value.

No. of Pages : 10 No. of Claims : 5

(12) PATENT APPLICATION PUBLICATION
(19) INDIA
(22) Date of filing of Application :21/01/2014

(21) Application No.258/CHE/2014 A
(43) Publication Date : 25/12/2015

(54) Title of the invention : METHOD AND APPARATUS FOR DEFORMING AN IMAGE

(51) International classification :G01C
(31) Priority Document No :NA
(32) Priority Date :NA
(33) Name of priority country :NA
(86) International Application No :NA
Filing Date :NA
(87) International Publication No : NA
(61) Patent of Addition to Application Number :NA
Filing Date :NA
(62) Divisional to Application Number :NA
Filing Date :NA

(71)**Name of Applicant :**
1)SAMSUNG R&D INSTITUTE INDIA BANGALORE PRIVATE LIMITED
Address of Applicant :# 2870, ORION Building, Bagmane Constellation Business Park, Outer Ring Road, Doddanakundi Circle, Marathahalli Post, Bangalore -560037, Karnataka, India Karnataka India
(72)**Name of Inventor :**
1)SHARMA, Ojaswa
2)THARAYIL, Ranjith
3)IYER, Kiran Nanjunda

(57) Abstract :
The various embodiments of the present invention disclose a method and apparatus for deforming an image. The method comprises of inputting at least one image to be deformed, computing a gram matrix for the at least one image, inputting, one or more control handles for deforming the at least one image, calculating an inner distance metric of at least object in the image using a multi-dimensional scaling (MDS), computing deformation weights associated with each pixel of the at least one image, modifying the one or more control handles with respect to the computed deformation weight associated with each pixel and deforming the image using a shape aware MLS deformation using the modified control handles. Figure 1

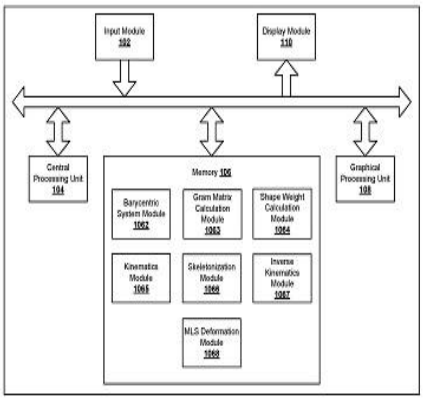

Figure 1

No. of Pages : 44 No. of Claims : 24

(12) PATENT APPLICATION PUBLICATION
(21) Application No.4032/CHE/2013 A
(19) INDIA
(22) Date of filing of Application :10/09/2013
(43) Publication Date : 25/12/2015

(54) Title of the invention : METHOD OF DOPING POTASSIUM INTO AMMONIUM PERCHLORATE

(51) International classification :C06B
(31) Priority Document No :NA
(32) Priority Date :NA
(33) Name of priority country :NA
(86) International Application No :NA
Filing Date :NA
(87) International Publication No : NA
(61) Patent of Addition to Application Number :NA
Filing Date :NA
(62) Divisional to Application Number :NA
Filing Date :NA

(71)**Name of Applicant :**
1)INDIAN INSTITUTE OF TECHNOLOGY MADRAS
Address of Applicant :INDIAN INSTITUTE OF TECHNOLOGY MADRAS, IIT P.O, CHENNAI - 600 036 Tamil Nadu India
(72)**Name of Inventor :**
1)P A RAMAKRISHNA
2)ISHITHA KUMAR

(57) Abstract :
ABSTRACT The present invention relates to a method of doping potassium into ammonium perchlorate for 5 enhancing composite solid propellant burning rates.

No. of Pages : 30 No. of Claims : 7

(12) PATENT APPLICATION PUBLICATION
(19) INDIA
(22) Date of filing of Application :11/11/2013
(21) Application No.5087/CHE/2013 A
(43) Publication Date : 25/12/2015

(54) Title of the invention : A LOCOMOTIVE SERVICE MANAGEMENT SYSTEM AND METHOD THEREOF

(51) International classification :B61C17/00
(31) Priority Document No :NA
(32) Priority Date :NA
(33) Name of priority country :NA
(86) International Application No :NA
Filing Date :NA
(87) International Publication No : NA
(61) Patent of Addition to Application Number :NA
Filing Date :NA
(62) Divisional to Application Number :NA
Filing Date :NA

(71)**Name of Applicant :**
1)GENERAL ELECTRIC COMPANY
Address of Applicant :1 RIVER ROAD, SCHENECTADY, NEW YORK 12345 U.S.A.
(72)**Name of Inventor :**
1)NAMBOOTHIRI, RAJEEV KRISHNAN
2)MATHEW, REEJO
3)BOLLAPRAGADA, SRINIVAS
4)SMITH, MARK DOUGLAS

(57) Abstract :
[0046] A locomotive service management system is presented. The locomotive comprises a processing subsystem that generates a recommendation by minimizing an objective function by satisfying a plurality of constraints formulated based upon at least one of a plurality of locomotive input wheel measurements corresponding to locomotive wheels mounted on respective locomotive axles in one or more trucks of a locomotive, a plurality of inventory input wheel measurements corresponding to inventory wheels mounted on respective inventory axles, a plurality of measurement thresholds, a plurality of tolerances, a look up table, and a plurality of decision variables, wherein the objective function comprises at least one of: the plurality of decision variables corresponding to one or more activities and associated costs for implementing the one or more activities on at least one of the locomotive wheels, the respective locomotive axles, the inventory wheels, and the respective inventory axles. Fig. 3

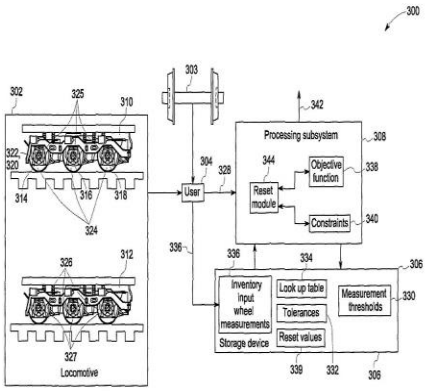

FIG. 3

No. of Pages : 36 No. of Claims : 20

(12) PATENT APPLICATION PUBLICATION
(19) INDIA
(22) Date of filing of Application :10/03/2014
(21) Application No.1221/CHE/2014 A
(43) Publication Date : 25/12/2015

(54) Title of the invention : PHOTO VOLTAIC SOLAR PANELS PRINTED ON BIODEGRADEABLE POLYMER SURFACES

(51) International classification :H01L31/00
(31) Priority Document No :NA
(32) Priority Date :NA
(33) Name of priority country :NA
(86) International Application No :NA
Filing Date :NA
(87) International Publication No : NA
(61) Patent of Addition to Application Number :NA
Filing Date :NA
(62) Divisional to Application Number :NA
Filing Date :NA

(71)**Name of Applicant :**
1)EESAVYASA TECHNOLOGIES PVT. LTD.
Address of Applicant :PLOT NO: 79, PHASE-III, SVCIE, BALANAGAR, HYDERABAD, R.R. DISTRICT - 500 037 Andhra Pradesh India
(72)**Name of Inventor :**
1)D.P. CHAKRAVARTHY
2)BANDA RAVI SANKAR

(57) Abstract :
In this method of invention, bio degradable polymeric thin films are used as substraces to deposit nano level thickness of photo voltaic substances like cadmium telluride, bismuth telluride, amorphous silicon which are doped with graphene nano particles. These panels will have high radiation to power generation conversions compared to conventional silicon panels and can be used as foldable photo voltaic panels to arrange in an unique array like leaves arranged in plant to harness maximum sunlight exposures.

No. of Pages : 8 No. of Claims : 5

(12) PATENT APPLICATION PUBLICATION
(21) Application No.1222/CHE/2014 A
(19) INDIA
(22) Date of filing of Application :10/03/2014
(43) Publication Date : 25/12/2015

(54) Title of the invention : PRODUCTION OF ETHELENE FROM USED POLYTHENE WASTE

(51) International classification :C10G11/00
(31) Priority Document No :NA
(32) Priority Date :NA
(33) Name of priority country :NA
(86) International Application No :NA
Filing Date :NA
(87) International Publication No : NA
(61) Patent of Addition to Application Number :NA
Filing Date :NA
(62) Divisional to Application Number :NA
Filing Date :NA

(71)**Name of Applicant :**
1)EESAVYASA TECHNOLOGIES PVT. LTD.
Address of Applicant :PLOT NO: 79, PHASE-III, SVCIE, BALANAGAR, HYDERABAD, R.R. DISTRICT - 500 037 Andhra Pradesh India
(72)**Name of Inventor :**
1)D.P. CHAKRAVARTHY
2)BANDA RAVI SANKAR

(57) Abstract :
In the proposed invention monomerization of polythene is achieved using used plastics, polythene as raw material. Under unique temperature, pressure conditions in modified atmospheric conditions, using certain nano catalytic surfaces, the fumes of polythene vapours are passed through. Filters made-up of a special type of zeolites mixed with nano carbon materials for strength are used to gush these vapours to other side where monomeric ethylene gas is prbduced.

No. of Pages : 7 No. of Claims : 4

(12) PATENT APPLICATION PUBLICATION
(19) INDIA
(22) Date of filing of Application :10/03/2014
(21) Application No.1223/CHE/2014 A
(43) Publication Date : 25/12/2015

(54) Title of the invention : PRODUCTION OF ETHELENE GAS USING NANO CATALYTIC PROCESS

(51) International classification :C25B
(31) Priority Document No :NA
(32) Priority Date :NA
(33) Name of priority country :NA
(86) International Application No :NA
Filing Date :NA
(87) International Publication No : NA
(61) Patent of Addition to Application Number :NA
Filing Date :NA
(62) Divisional to Application Number :NA
Filing Date :NA

(71)**Name of Applicant :**
1)EESAVYASA TECHNOLOGIES PVT. LTD.
Address of Applicant :PLOT NO: 79, PHASE-III, SVCIE, BALANAGAR, HYDERABAD, R.R. DISTRICT - 500 037 Andhra Pradesh India
(72)**Name of Inventor :**
1)D.P. CHAKRAVARTHY
2)BANDA RAVI SANKAR

(57) Abstract :
In the proposed invention, low grade carbon or coal and hydrogen gas liberated from water electrolysis are used as raw materials. When jthese two compounds are subjected for combustion in controlled atmosphere in a specially designed furnace which works with micro plasma techniques uses nano catalytic surfaces to produce ethylene gas. The nano catalyst may include osmiums, ruthilium, nickel, platinum, palladium, gallium, titanium like surfaces. Under certain controlled temperatures and pressures the double bond between the carbon atoms is]fixed to give continuous emission of ethylene gas.

No. of Pages : 7 No. of Claims : 4

(12) PATENT APPLICATION PUBLICATION
(21) Application No.4590/CHE/2013 A
(19) INDIA
(22) Date of filing of Application :10/10/2013
(43) Publication Date : 25/12/2015

(54) Title of the invention : METHOD OF PREPARING NOVEL POLY HERBAL FORMULATIONS CONTAINING CURCUMIN, QUERCETIN AND PIPERINE IN THE FORM OF SOLID LIPID NANO PARTICLES AND NANO CRYSTALS

(51) International classification :A61K
(31) Priority Document No :NA
(32) Priority Date :NA
(33) Name of priority country :NA
(86) International Application No :NA
Filing Date :NA
(87) International Publication No : NA
(61) Patent of Addition to Application Number :NA
Filing Date :NA
(62) Divisional to Application Number :NA
Filing Date :NA

(71)**Name of Applicant :**
1)DR. K. GOWTHAMARAJAN
Address of Applicant :137, VIJAYANAGAR, NEAR ROSE GARDEN, UDHAGAMANDALAM, THE NILGIRIS - 643 001 Tamil Nadu India
2)MR. SHANMUGAM R
(72)**Name of Inventor :**
1)DR. K. GOWTHAMARAJAN
2)MR. SHANMUGAM R
3)MS. L PRIYANKA DWARAMPUDI
4)MS. MADHURI KADIYALA
5)DR. M.N. SATISH KUMAR

(57) Abstract :
The present invention relates to process of preparing herbal solid lipid nanoparticles and nanocrystals loaded with curcumin, quercetin and piperine with improved bioavailability. The phyto constituents curcumin, quercetin and piperine had more therapeutic benefits but their utility was limited by poor solubility, permeability and resulted low bioavailability. Hence these constituents were characterized based on Biopharmaceutical classification system. Then herbal solid lipid nanoparticles loaded with curcumin, quercetin and piperine were prepared by micro emulsion technique with lipid glycerol monostearate and nanocrystals prepared by antisolvent recrystallization technique. In vitro characterization was performed including particle size and distribution, zeta potential, dissolution, scanning electron microscopy. The herbal solid lipid nanoparticles and nanocrystals exhibited significantly enhanced dissolution. Invivo Pharmacokinetic tests were performed in rabbits. Pharmacokinetic parameters were evaluated with reverse phase ultra fast liquid chromatography. The herbal solid lipid nanoparticles and nanocrystals had rapid and extensive absorption with improved bioavailability.

No. of Pages : 22 No. of Claims : 10

(12) PATENT APPLICATION PUBLICATION
(21) Application No.5162/CHE/2013 A
(19) INDIA
(22) Date of filing of Application :14/11/2013
(43) Publication Date : 25/12/2015

(54) Title of the invention : ANTIBIOFILM AND ANTIMICROBIAL POLYMER FILM AND PROCESS OF PRODUCING THE SAME

(51) International classification :A61L29/00
(31) Priority Document No :NA
(32) Priority Date :NA
(33) Name of priority country :NA
(86) International Application No :NA
Filing Date :NA
(87) International Publication No : NA
(61) Patent of Addition to Application Number :NA
Filing Date :NA
(62) Divisional to Application Number :NA
Filing Date :NA

(71)**Name of Applicant :**
1)INDIAN INSTITUTE OF TECHNOLOGY MADRAS (IITM)
Address of Applicant :DELHI AVE, CHENNAI - 36 Tamil Nadu India
(72)**Name of Inventor :**
1)MUKESH DOBLE
2)VELUCHAMY PRABHAWATHI

(57) Abstract :
ABSTRACT An antibiofilm and antimicrobial polymer film using an enzyme modified polymer film and process of producing the same. Initially, curcumin (e.g., a cross linker) can be mixed with ethanol and coated on a polymer surface in order to thereby place into a Ultra Violet (UV) chamber for a defined time period (e.g., 10 minutes). The UV treatment can make a cross link between the functional group of the polymer and the curcumin. In another embodiment of the present invention, if the polymer surface does not possess a functional group, the polymer surface can be UV treated towards radical formation in order to form an activated polymer. The activated polymer can be further coated with the curcumin and further placed into the UV chamber for a defined time period. An enzyme (e.g., hydrolase) is coated on the curcumin liked polymer surface and UV treated in order to form a cross link between the functional group present on the curcumin and the functional group present in the enzyme. Such a treatment results in an improved hydrolase cross linked polymer film which can be adapted in a wide range of packaging applications of food packaging industry.

No. of Pages : 22 No. of Claims : 6

(12) PATENT APPLICATION PUBLICATION
(21) Application No.2241/CHENP/2014 A
(19) INDIA
(22) Date of filing of Application :24/03/2014
(43) Publication Date : 25/12/2015

(54) Title of the invention : A TRANSFORMED PLANT COMPRISING STABLY INCORPORATED IN ITS GENOME RECOMBINANT, OR RANDOMLY MUTAGENIZED RICE AHASL1 AND A METHOD OF PRODUCING THE SAME

(51) International classification :A01H1/00,A01H5/00
(31) Priority Document No :60/657,968
(32) Priority Date :02/03/2005
(33) Name of priority country :U.S.A.
(86) International Application No :PCT/US2006/07343
Filing Date :28/02/2006
(87) International Publication No :WO/2006/094084
(61) Patent of Addition to Application Number :NA
Filing Date :NA
(62) Divisional to Application Number :4347/CHENP/2007
Filed on :28/02/2006

(71)**Name of Applicant :**
1)INSTITUTO NACIONAL DE TECNOLOGIA AGROPECUARIA
Address of Applicant :of Rivadavia 1439, Buenos Aires, Argentina Argentina
(72)**Name of Inventor :**
1)LIVORE, Alberto, Blas
2)PRINA, Alberto, Raul
3)SINGH, Bijay
4)ASCENZI, Robert
5)WHITT, Sherry, R.

(57) Abstract :
The present invention relates to a transformed plant comprising stably incorporated in its genome recombinant, or randomly mutagenized rice AHASL1 a polynucleotide construct comprising a nucleotide sequence operably linked to a promoter that drives expression in a plant cell, wherein said nucleotide sequence is selected from the group consisting of: (a) the nucleotide sequence set forth in SEQ ID NO: 1 or 3; (b) a nucleotide sequence encoding the amino acid sequence set forth in SEQ ID NO: 2; (c) nucleotide sequences encoding a variant rice AHASL1 protein comprising an aspartate or valine substitution at amino acid position 179 or an equivalent position relative to the amino acid sequence set forth in SEQ ID NO: 2 said substitution having resulted from random chemical mutagenesis; (d) the nucleotide sequences according to (a)(c), further comprising at least one amino acid substitution selected from the group consisting of: (i) the alanine at amino acid position 96 or an equivalent position relative to the amino acid sequence set forth in SEQ ID NO:2 is substituted with threonine, (ii) the proline at amino acid position 171 or an equivalent position relative to the amino acid sequence set forth in SEQ ID NO:2 is substituted with alanine, threonine, histidine, leucine, arginine, isoleucine, glutamine, or serine, (iii) the tryptophan at amino acid position 548 or an equivalent position relative to the amino acid sequence set forth in SEQ ID NO:2 is substituted with leucine, and (iv) the serine at 627 or an equivalent position relative to the amino acid sequence set forth in SEQ ID NO:2 is substituted with asparagine, threonine, or phenylalanine; and (e) nucleotide sequences that are fully complementary to any one of the nucleotide sequences set forth in (a)(d); wherein said transformed plant has increased tolerance to at least one herbicide relative to the tolerance of an untransformed variety of said plant to said herbicide.

No. of Pages : 107 No. of Claims : 50

(12) PATENT APPLICATION PUBLICATION
(21) Application No.4383/CHE/2013 A
(19) INDIA
(22) Date of filing of Application :27/09/2013
(43) Publication Date : 25/12/2015

(54) Title of the invention : DESIGN OF UNIVERSAL COGNITIVE RADIO ENGINE BASED HYBIRD COMMUNICATION SYSTEMS

(51) International classification	:H04W	(71)**Name of Applicant :**
(31) Priority Document No	:NA	**1)GARIMELLA RAMA MURTHY**
(32) Priority Date	:NA	Address of Applicant :C/O SPCRC, IIIT-HYDERABAD, A3-314, VINDHYA BUILDING, IIIT HYDERABAD, GACHIBOWLI - 32 Andhra Pradesh India
(33) Name of priority country	:NA	
(86) International Application No	:NA	
Filing Date	:NA	**2)VISWANADH KONJETI**
(87) International Publication No	: NA	**3)SRIKANTH MUNJULURI**
(61) Patent of Addition to Application Number	:NA	(72)**Name of Inventor :**
Filing Date	:NA	**1)GARIMELLA RAMA MURTHY**
(62) Divisional to Application Number	:NA	**2)VISWANADH KONJETI**
Filing Date	:NA	**3)SRIKANTH MUNJULURI**

(57) Abstract :
ABSTRACT DESIGN OF UNIVERSAL COGNITIVE RADIO ENGINE BASED HYBRID COMMUNICATION SYSTEMS The present invention provides a global/universal cognitive radio engine based a hybrid communication system which improves the spectral utilization factor to its maximum by using a Global Cognitive radio. To sense, access and utilize the spectrum gaps or holes, which exist in a remote idle network, and not confining to a local spatial and temporal domain is the basis of Global Cognitive Radio. The present invention provides a system which synchronizes the operations of entire Communication Systems across the globe. The present invention capitalizes upon the idea of efficient spectrum utilization on a global scale.

No. of Pages : 29 No. of Claims : 13

(12) PATENT APPLICATION PUBLICATION
(19) INDIA
(22) Date of filing of Application :29/11/2013
(21) Application No.5516/CHE/2013 A
(43) Publication Date : 25/12/2015

(54) Title of the invention : INSPECTION OF PLUNGER FOR AUTOMOTIVE BRAKING SYSTEM

(51) International classification :B60T
(31) Priority Document No :NA
(32) Priority Date :NA
(33) Name of priority country :NA
(86) International Application No :NA
Filing Date :NA
(87) International Publication No : NA
(61) Patent of Addition to Application Number :NA
Filing Date :NA
(62) Divisional to Application Number :NA
Filing Date :NA

(71)**Name of Applicant :**
1)RAJALAKSHMI ENGINEERING COLLEGE
Address of Applicant :RAJALAKSHMI NAGAR, THANDALAM, CHENNAI - 602 105 Tamil Nadu India
(72)**Name of Inventor :**
1)N. RADHAKRISHNAN
2)S. SHANKAR BHARATHI
3)B SASIKUMAR

(57) Abstract :
The present invention provides a system and method to inspect the presence of burr in plunger component of an automotive braking system. The plunger component is rotated through a servo motor to focus all the holes of the plunger in line with a camera which is triggered with the help of a Programmable Logic Controller (PLC) and the images are captured by the camera provided with front and back light to illuminate the component. The captured images are then analysed in a Personal Computer (PC) and the image output is displayed on a monitor. The image output is passed on to the monitor to indicate the results. The entire inspection time for one plunger component is about 4 seconds.

No. of Pages : 17 No. of Claims : 6

(12) PATENT APPLICATION PUBLICATION
(19) INDIA
(22) Date of filing of Application :27/03/2014
(21) Application No.1647/CHE/2014 A
(43) Publication Date : 25/12/2015

(54) Title of the invention : PHAGE-DERIVED COMPOSITIONS FOR IMPROVED MYCOBACTERIAL THERAPY

(51) International classification :C12N15/63
(31) Priority Document No :NA
(32) Priority Date :NA
(33) Name of priority country :NA
(86) International Application No :NA
Filing Date :NA
(87) International Publication No : NA
(61) Patent of Addition to Application Number :NA
Filing Date :NA
(62) Divisional to Application Number :NA
Filing Date :NA

(71)**Name of Applicant :**
1)GANGAGEN, INC.
Address of Applicant :6167 Jarvis Avenue #324, Newark, California 94560 U.S.A.
(72)**Name of Inventor :**
1)SHARMA, Umender Kumar

(57) Abstract :
Methods and compositions for the treatment of mycobacteria infections, particularly antibiotic resistant strains. Of particular use in treating tuberculosis infections, including dormant or difficult to treat forms.

No. of Pages : 79 No. of Claims : 21

(12) PATENT APPLICATION PUBLICATION
(19) INDIA
(22) Date of filing of Application :02/04/2014
(21) Application No.1785/CHE/2014 A
(43) Publication Date : 25/12/2015

(54) Title of the invention : A SYSTEM AND METHOD OF M2M CLOUD BASED EMERGENCY COMMUNICATION NETWORK

(51) International classification :H04M
(31) Priority Document No :NA
(32) Priority Date :NA
(33) Name of priority country :NA
(86) International Application No :NA
Filing Date :NA
(87) International Publication No : NA
(61) Patent of Addition to Application Number :NA
Filing Date :NA
(62) Divisional to Application Number :NA
Filing Date :NA

(71)**Name of Applicant :**
1)Nichehands Technologies Pvt Ltd
Address of Applicant :748, Sai Nilaya, 8th B Main Road, 21st Cross Rd, 7th Sector, HSR Layout, Bangalore, Karnataka 560102. Karnataka India
(72)**Name of Inventor :**
1)Natarajan Sengodagounder

(57) Abstract :
Abstract The present invention provides devices-out the extended coverage, emergency alarm, location services, audio response and video response. Further, the invention defines all the communication networks, electrical networks includes a transmitter and receiver which has the dedicated protocol and acts only in case of any surrounding person suffers due to emergency.

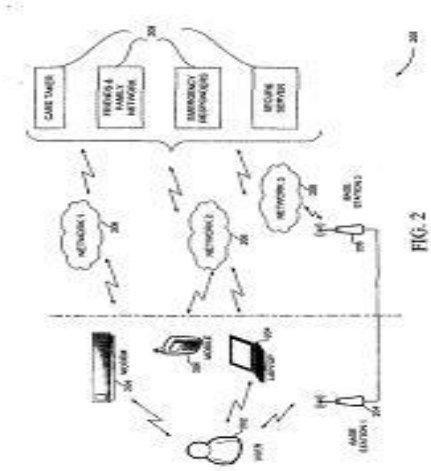

FIG. 2

No. of Pages : 23 No. of Claims : 10

(12) PATENT APPLICATION PUBLICATION
(19) INDIA
(22) Date of filing of Application :02/04/2014
(21) Application No.1786/CHE/2014 A
(43) Publication Date : 25/12/2015

(54) Title of the invention : ARRANGEMENT FOR PHYSICALLY LOCATING FIELD DEVICES IN PROCESS INSTALLATIONS

(51) International classification :G05B 19/00
(31) Priority Document No :202013003415.7
(32) Priority Date :11/04/2013
(33) Name of priority country :Germany
(86) International Application No :NA
Filing Date :NA
(87) International Publication No : NA
(61) Patent of Addition to Application Number :NA
Filing Date :NA
(62) Divisional to Application Number :NA
Filing Date :NA

(71)**Name of Applicant :**
1)ABB TECHNOLOGY AG
Address of Applicant :Affolternstrasse 44, CH-8050 Zurich, Switzerland Switzerland
(72)**Name of Inventor :**
1)ROLAND BRAUN
2)ALEXANDER KAISER

(57) Abstract :
The invention relates to an arrangement for physically locating field devices in process installations, in which each field device can be uniquely identified and its installation location in the process installation is known. In order to control and find a field device in the shortest possible time, a mobile device (10) having at least one memory (15) and a graphical display device (16) is provided, at least one graphical representation (12) of the field device and a topological coordinate specification (13) of the installation location of the respective field device being assigned to the particularized data (11) relating to the respective field device and being stored in a retrievable manner in the memory (15). Accompanying figure

No. of Pages : 10 No. of Claims : 5

(12) PATENT APPLICATION PUBLICATION
(21) Application No.2506/CHENP/2014 A
(19) INDIA
(22) Date of filing of Application :02/04/2014
(43) Publication Date : 25/12/2015

(54) Title of the invention : SELECTION OF PREFERRED SAMPLE HANDLING AND PROCESSING PROTOCOL FOR IDENTIFICATION OF DISEASE BIOMARKERS AND SAMPLE QUALITY ASSESSMENT

(51) International classification :C12M1/34
(31) Priority Document No :61/550688
(32) Priority Date :24/10/2011
(33) Name of priority country :U.S.A.
(86) International Application No :PCT/US2012/061722
Filing Date :24/10/2012
(87) International Publication No :WO 2013/063139
(61) Patent of Addition to Application Number :NA
Filing Date :NA
(62) Divisional to Application Number :NA
Filing Date :NA

(71)**Name of Applicant :**
1)SOMALOGIC INC.
Address of Applicant :2945 Wilderness Place Boulder Colorado 80301 U.S.A.
(72)**Name of Inventor :**
1)RIEL MEHAN Michael
2)STEWART Alex A.E.
3)SANDERS Glenn
4)OSTROFF Rachel M.
5)WILLIAMS Stephen Alaric
6)BRODY Edward N.

(57) Abstract :
The subject invention relates to methods for obtaining biological samples of improved quality. It encompasses the identification of markers or proteins in biological samples that are altered due to variations in sample collection handling and processing. They are also useful for correcting variations in measured results for disease biomarkers. Further they can permit the rejection of samples or groups of samples as necessary if it is determined that their collection method was not in accordance with the predetermined protocol. Other advantages useful to the skilled artisan are described herein.

No. of Pages : 75 No. of Claims : 22

(12) PATENT APPLICATION PUBLICATION
(19) INDIA
(22) Date of filing of Application :12/12/2013
(21) Application No.5741/CHE/2013 A
(43) Publication Date : 25/12/2015

(54) Title of the invention : SOCKET CHARGER

(51) International classification :A47L
(31) Priority Document No :NA
(32) Priority Date :NA
(33) Name of priority country :NA
(86) International Application No :NA
Filing Date :NA
(87) International Publication No : NA
(61) Patent of Addition to Application Number :NA
Filing Date :NA
(62) Divisional to Application Number :NA
Filing Date :NA

(71)**Name of Applicant :**
1)MUNOTH COMMUNICATION LIMITED
Address of Applicant :MUNOTH CENTRE, SUITE NO 48, 3RD FLOOR, 343 TRIPLICANE HIGH ROAD, CHENNAI 600 005 Tamil Nadu India
(72)**Name of Inventor :**
1)JASWANT MUNOTH

(57) Abstract :
A socket charger for electronic devices is disclosed. Said socket charger comprises a transformer that increases/decreases the output of a global socket adapter; a convertor that converts the alternating current (AC) into direct current (DC); a switched mode power supply (SMPS) used to regulate the DC output of the convertor; a filter bank that separates the SMPS output into multiple components; one or more USB female connectors for charging one or more electronic devices; one or more Light Emitting Diode (LED) indicators, said LED indicators providing a visual indication of charge status; a fuse; one or more fluorescent locators, said fluorescent indicators acting as a visual guide in dark environments; one or more switches for toggling between two different charging modes, a quick mode and a normal mode; and a casing, said casing being removably mountable; wherein the transformer, the convertor, the SMPS and the filter bank are enclosed within the casing. [Figure to be enclosed: Figure 1]

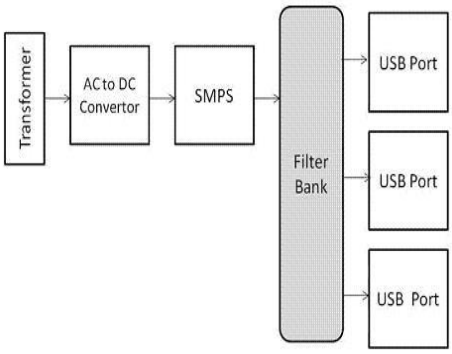

Figure 1

No. of Pages : 6 No. of Claims : 5

(12) PATENT APPLICATION PUBLICATION
(21) Application No.1428/CHE/2014 A
(19) INDIA
(22) Date of filing of Application :18/03/2014
(43) Publication Date : 25/12/2015

(54) Title of the invention : A COMPOSITION FOR ENHANCED INHIBITION OF PROSTAGLANDIN PATHWAY AND USES THEREOF

(51) International classification :C09B
(31) Priority Document No :NA
(32) Priority Date :NA
(33) Name of priority country :NA
(86) International Application No :NA
Filing Date :NA
(87) International Publication No : NA
(61) Patent of Addition to Application Number :NA
Filing Date :NA
(62) Divisional to Application Number :NA
Filing Date :NA

(71)**Name of Applicant :**
1)ITC LIMITED
Address of Applicant :ITC-LIFE SCIENCE AND TECHNOLOGY CENTER #3, 1st Main, Peenya Industrial Area, Phase 1, Bangalore 560 058 Tamil Nadu India
(72)**Name of Inventor :**
1)KAREMPUDI, Pavani
2)HEGDE, Ashok
3)SHAH, Dipak
4)KALSI, Gurpreet

(57) Abstract :
The present disclosure relates to a composition comprising of at least two or more flavonoids that enhance hair growth. The present disclosure provides particular ratios of at least two more flavoniods that enhance hair growth.

No. of Pages : 17 No. of Claims : 10

(12) PATENT APPLICATION PUBLICATION
(21) Application No.1763/CHE/2014 A
(19) INDIA
(22) Date of filing of Application :01/04/2014
(43) Publication Date : 25/12/2015

(54) Title of the invention : HAND HELD WIPER DEVICE FOR WEEDY RICE CONTROL

(51) International classification	:A01N 25/00
(31) Priority Document No	:NA
(32) Priority Date	:NA
(33) Name of priority country	:NA
(86) International Application No	:NA
Filing Date	:NA
(87) International Publication No	: NA
(61) Patent of Addition to Application Number	:NA
Filing Date	:NA
(62) Divisional to Application Number	:NA
Filing Date	:NA

(71)**Name of Applicant :**
1)KERALA AGRICULTURAL UNIVERSITY
Address of Applicant :KAU P.O, THRISSUR 680 656 Kerala India
(72)**Name of Inventor :**
1)NIMMY JOSE
2)DR. C.T. ABRAHAM
3)DR. LEENA KUMARI S
4)DR. REENA MATHEW

(57) Abstract :
ABSTRACT A hand held wiper device for selective manual application of nonselective broad spectrum herbicide to dry the earheads of weedy rice, a genetically similar noxious weed in rice fields is provided. The device can be used to selectively apply the herbicide on the ear heads of weedy rice at its flowering stage when the height of cultivated crop and weedy rice differs up to 12 - 15 cm. It includes a herbicide tank and a hose mounted on a U shaped frame. The hose is provided with eight holes through which herbicide flows and saturates the cloth fastened around the hose. The device can be swung horizontally with the help of the handle, to wipe herbicide on ear heads of weedy rice to prevent the seed rain of weedy rice seeds.

No. of Pages : 11 No. of Claims : 3

(12) PATENT APPLICATION PUBLICATION
(19) INDIA
(22) Date of filing of Application :01/04/2014

(21) Application No.1764/CHE/2014 A
(43) Publication Date : 25/12/2015

(54) Title of the invention : A SYSTEM AND METHOD FOR ASSURING QUALITY OF MESH IN A FINITE ELEMENT ANALYSIS

(51) International classification	:G06F 17/00
(31) Priority Document No	:NA
(32) Priority Date	:NA
(33) Name of priority country	:NA
(86) International Application No	:NA
Filing Date	:NA
(87) International Publication No	: NA
(61) Patent of Addition to Application Number	:NA
Filing Date	:NA
(62) Divisional to Application Number	:NA
Filing Date	:NA

(71)**Name of Applicant :**
1)INFOTECH ENTERPRISES LIMITED
Address of Applicant :PLOT NO. 11, INFOCITY, SOFTWARE UNITS LAYOUT, MADHAPUR, HYDERABAD - 500 081 Andhra Pradesh India
(72)**Name of Inventor :**
1)RAVI KATUKAM
2)PRABHU KRISHNAN

(57) Abstract :
The present invention relates to systems and methods of checking and correcting the quality of meshing in the finite element analysis. The method comprises providing the finite element (FE) mesh of a structure including a plurality of elements, nodes, edges, performing a desired quality check for the finite element mesh for each of a node, a element, a edge in the FE mesh, checking a normal alignment of each of the element, checking a connection of each element with another element, highlighting the elements that do not meet the desired quality check in predefined colors, fixing the errors of mesh quality in order to satisfy desired quality criterion, redefining the desired quality criterion after fixing the errors and repeating steps till the desired quality criterion is satisfied.

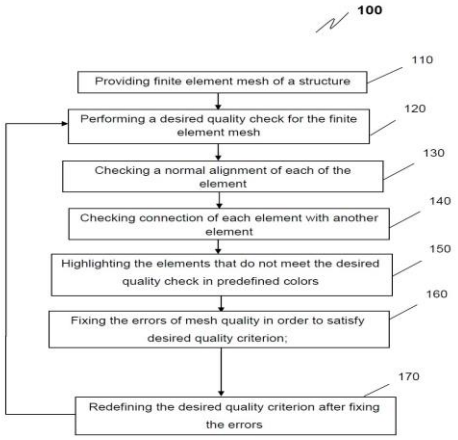

FIG. 1

No. of Pages : 7 No. of Claims : 8

(12) PATENT APPLICATION PUBLICATION
(19) INDIA
(22) Date of filing of Application :01/11/2013
(21) Application No.4932/CHE/2013 A
(43) Publication Date : 25/12/2015

(54) Title of the invention : PROCESS FOR THE PREPARATION OF ASENAPINE MALEATE

(51) International classification :C07D
(31) Priority Document No :NA
(32) Priority Date :NA
(33) Name of priority country :NA
(86) International Application No :NA
Filing Date :NA
(87) International Publication No : NA
(61) Patent of Addition to Application Number :NA
Filing Date :NA
(62) Divisional to Application Number :NA
Filing Date :NA

(71)**Name of Applicant :**
1)DR. REDDY'S LABORATORIES LIMITED
Address of Applicant :8-2-337, ROAD NO.3, BANJARA HILLS, HYDERABAD - 500034 Andhra Pradesh India
(72)**Name of Inventor :**
1)Vilas Hareshwar Dahanukar
2)Javed Iqbal
3)Srinivas Oruganti
4)Rajesh Kumar Rapolu

(57) Abstract :
Improved processes for preparing asenapine and pharmaceutically acceptable salts thereof which are simple, cost-effective, commercially viable, sustainable, eco-friendly and avoid multiple steps.

No. of Pages : 30 No. of Claims : 7

(12) PATENT APPLICATION PUBLICATION
(21) Application No.5759/CHE/2013 A
(19) INDIA
(22) Date of filing of Application :12/12/2013
(43) Publication Date : 25/12/2015

(54) Title of the invention : BIOCONVERSION OF TITANIUM ADDED FLUOROPHOSPHATE CLASSES AND METHOD OF MAKING THEREOF

(51) International classification :C01C
(31) Priority Document No :NA
(32) Priority Date :NA
(33) Name of priority country :NA
(86) International Application No :NA
Filing Date :NA
(87) International Publication No : NA
(61) Patent of Addition to Application Number :NA
Filing Date :NA
(62) Divisional to Application Number :NA
Filing Date :NA

(71)**Name of Applicant :**
1)PANDIAN BIO-MEDICAL RESEARCH CENTRE
Address of Applicant :36, SIVAGANGAI ROAD, MADURAI - 625 020 Tamil Nadu India
(72)**Name of Inventor :**
1)GURUSAMY RAJKUMAR
2)SANKARALINGAM PUGALANTHI PANDIAN

(57) Abstract :
The present invention discloses different composition of titanium added fluorophosphate glasses prepared using melt-quench method. The physico-chemical and bio conversion of titanium added fluorophosphate glasses were accessed using density measurements, ultrasonic measurements to determine elastic moduli, XRD patterns, FTIR spectra, XPS spectrograph, pH variations during 21 days of in vitro studies in SBF solution, SEM images and EDS spectra. Bioconversion was also accessed by in vivo studies of implantation of the optimized glass into animal bone for 10 weeks followed by SEM images, EDS spectra and CLSM images. The result obtained before, after in vitro and in vivo studies are discussed in terms of structure, stability, mechanical properties, bone bonding ability and bioconversion of the prepared glass samples. The sample TiFP4 is found to be more ideal and better than other samples for future clinical use.

No. of Pages : 23 No. of Claims : 8

(12) PATENT APPLICATION PUBLICATION
(21) Application No.1748/CHE/2014 A
(19) INDIA
(22) Date of filing of Application :01/04/2014
(43) Publication Date : 25/12/2015

(54) Title of the invention : BRAKING SYSTEM FOR A VEHICLE

(51) International classification :B60T
(31) Priority Document No :NA
(32) Priority Date :NA
(33) Name of priority country :NA
(86) International Application No :NA
Filing Date :NA
(87) International Publication No : NA
(61) Patent of Addition to Application Number :NA
Filing Date :NA
(62) Divisional to Application Number :NA
Filing Date :NA

(71)**Name of Applicant :**
1)TVS MOTOR COMPANY LIMITED
Address of Applicant :JAYALAKSHMI ESTATES • NO.29 (OLD NO.8) HADDOWS ROAD, CHENNAI 600 006 Tamil Nadu India
(72)**Name of Inventor :**
1)PUTHIAVAN, MUTHUPUTHIAVAN
2)KARANAM, VENKATA MANGARAJU
3)RENGARAJAN, BABU

(57) Abstract :
NA

No. of Pages : 27 No. of Claims : 8

(12) PATENT APPLICATION PUBLICATION
(19) INDIA
(22) Date of filing of Application :01/04/2014
(21) Application No.1749/CHE/2014 A
(43) Publication Date : 25/12/2015

(54) Title of the invention : WATER HEATING SYSTEM

(51) International classification :H01L
(31) Priority Document No :NA
(32) Priority Date :NA
(33) Name of priority country :NA
(86) International Application No :NA
Filing Date :NA
(87) International Publication No : NA
(61) Patent of Addition to Application Number :NA
Filing Date :NA
(62) Divisional to Application Number :NA
Filing Date :NA

(71)**Name of Applicant :**
1)George Jacob Plackattu
Address of Applicant :C/o Mathew Jacob Plackattu,Kalathipady,Vadavathoor (P.O), Kottayam , Kerala Kerala India
(72)**Name of Inventor :**
1)George Jacob Plackattu

(57) Abstract :
The present invention relates to water heating system with low power to heat water tank which in turn heats the water. The water heating system of the present invention is based on the principle in which the heating element is placed such that it concentrates the heat towards the center of the water inside the tank. The heat generated from the heating element is directed and reflected towards the center for enabling better heating efficiency with lower consumption of energy. Further, the present invention relates to electric water heating system with thermal insulating material to reduce heat loss from the heated water tank. Advantageously, the water heating system is also operated using solar power as well as grid power.

No. of Pages : 14 No. of Claims : 8

(12) PATENT APPLICATION PUBLICATION
(21) Application No.2117/CHE/2013 A
(19) INDIA
(22) Date of filing of Application :13/05/2013
(43) Publication Date : 25/12/2015

(54) Title of the invention : A METHOD FOR DETECTING BANANA BUNCHY TOP VIRUS

(51) International classification	:C12N5/10	(71)**Name of Applicant :**
(31) Priority Document No	:NA	**1)SRI RAMACHANDRA UNIVERSITY**
(32) Priority Date	:NA	Address of Applicant :NO 1. RAMACHANDRA NAGAR, PORUR, CHENNAI - 600 116 Tamil Nadu India
(33) Name of priority country	:NA	(72)**Name of Inventor :**
(86) International Application No	:NA	**1)KUMAR PERUMAL**
Filing Date	:NA	**2)ARUN VISWANATHAN**
(87) International Publication No	: NA	**3)THIRUPANAGADU SRINIVASAN LOKESWARI**
(61) Patent of Addition to Application Number	:NA	
Filing Date	:NA	
(62) Divisional to Application Number	:NA	
Filing Date	:NA	

(57) Abstract :

Title: A METHOD FOR DETECTING BANANA BUNCHY TOP VIRUS Applicants Name: SRI RAMACHANDRA UNIVERSITY Application No : 2117/CHE/2013 dated 13/05/2013 ABSTRACT The present invention discloses isolated and cloned DNA molecules derived from BBTV to design probes for detecting banana bunchy top virus (BBTV) in a plant. The invention also discloses a method and a kit for detecting BBTV utilizing functionalized gold nanoparticle probes or functionalized AuNP probe. The method involves obtaining a tissue sample from the plant (Musaceae), extracting total DNA from the tissue sample, and denaturating the extracted total DNA. A red colored functionalized AuNPs probe was added to the formed denaturated DNA and heated at predetermined temperature for predetermined time to form a red coloured hybridized mixture. The dielectric constant of the medium carrying the red coloured hybridized mixture is changed by adding acid or salt to detect the BBTV in which retention of red colour indicates presence of BBTV and colour change from red to purple indicates absence of BBTV. The kit for detecting BBTV comprises of (a) Positive control (complementary/ target nucleic acid) (b) Negative control (non-complementary/ non-target nucleic acid or water) (c) Red coloured functionalized AuNPs in hybridization buffer (d) Acid or Salt and (e) Instruction manual with reference chart.

No. of Pages : 40 No. of Claims : 14

(12) PATENT APPLICATION PUBLICATION
(21) Application No.6159/CHE/2013 A
(19) INDIA
(22) Date of filing of Application :30/12/2013
(43) Publication Date : 25/12/2015

(54) Title of the invention : A PROCESS FOR THE PREPARATION OF N-DEBOC DOCETAXEL OR 10-DEACETYL-N-DEBENZOYL PACILITAXEL

(51) International classification :C07D
(31) Priority Document No :NA
(32) Priority Date :NA
(33) Name of priority country :NA
(86) International Application No :NA
Filing Date :NA
(87) International Publication No : NA
(61) Patent of Addition to Application Number :NA
Filing Date :NA
(62) Divisional to Application Number :NA
Filing Date :NA

(71)**Name of Applicant :**
1)HYGRO CHEMICALS PHARMTEK PVT. LTD.
Address of Applicant :# 203 & 204, 2ND FLOOR, ASHOKA BHOOPAL CHAMBERS, SARDER PATEL ROAD, SECUNDERABAD 500 003 Andhra Pradesh India
(72)**Name of Inventor :**
1)DEEVI SARANGAPANI IYENGAR
2)ANIL SAIKIA
3)MANOJ KUMAR AGNIHOTRAM

(57) Abstract :
ABSTRACT A process is provided for the preparation of N-debocdocetaxel (I), a common. . intermediate for the preparation paclitaxel and docetaxel. The process comprises the following steps: . a) coupling of 7,10-di-O-chloroacetyl-10-deacetylbaccatin III (III) with (4R,5S)-5-thoxyoxycarbonyl-2-(4-methoxyphenyl)-4-phenyl-3-benzyloxycarbonyl-l,3-oxazolidine (IV) to give 7,10-di-O-[2-(chloroacetyl)]-13-[(4S,5R)-2-(p-methoxyphenyl)-3-benzyloxycarbonyl-4-phenyl-l,3-oxazolidinyl]-10-deacetylbaccatin III, (V) in the presence of a condensation agent, b) cleaving he oxazolidine ring to give 13-(3-N-Benzyloxycarbonylphenylisoserine)-7,10-di-O-chloroacetyl-10-deactylbaccatin III, (VI) with formic acid, . c) deprotection of chloroacetyl groups by the hydrolysis of compound (VI) with ammonia to achieve 13-(3-N-Benzyloxycarbonylphenylisoserine)- 10-deactylbaccatinIII, (VII), . d) deprotection of tebenzoyloxy group from 13-(3-N-Benzyloxycarbonylphenylisoserine)-10-deactylbaccatin III to obtain the crude debocdocetaxel, e) passing the crude debocdocetaxel through a silica bed, elutirig with acetone/hexane followed by crystallization with 50% tetrahydrofuran and diisopropyl ether to give the N-debocdocetaxel of high purity.

No. of Pages : 16 No. of Claims : 9

(12) PATENT APPLICATION PUBLICATION
(19) INDIA
(22) Date of filing of Application :03/04/2014
(21) Application No.2530/CHENP/2014 A
(43) Publication Date : 25/12/2015

(54) Title of the invention : CYTOCHROME P450 AND USE THEREOF FOR THE ENZYMATIC OXIDATION OF TERPENES

(51) International classification :C12N9/00,C12P7/02
(31) Priority Document No :11187409.5
(32) Priority Date :01/11/2011
(33) Name of priority country :EPO
(86) International Application No :PCT/EP2012/071096
Filing Date :25/10/2012
(87) International Publication No :WO 2013/064411
(61) Patent of Addition to Application Number :NA
Filing Date :NA
(62) Divisional to Application Number :NA
Filing Date :NA

(71)**Name of Applicant :**
1)FIRMENICH SA
Address of Applicant :1 route des Jeunes P.O. Box 239 CH 1211 Geneva 8 Switzerland
(72)**Name of Inventor :**
1)SCHALK Michel
2)DEGUERRY Fabienne

(57) Abstract :
The present invention provides the nucleic acid and the amino acid sequences of a cytochrome P450 capable of oxidizing terpene molecules. It also provides a method of oxidizing terpene molecules comprising contacting the cytochrome P450 of the invention with the terpene molecule intended to be oxidized. In particular said method may be carried out in vitro or in vivo to produce oxidized terpene molecules which may be used in different technical fields such as for example perfumery and flavoring. The present invention also provides an expression vector containing the nucleic acid. A non human host organism or a cell transformed with the nucleic acid is also an object of the invention.

No. of Pages : 56 No. of Claims : 37

(12) PATENT APPLICATION PUBLICATION
(19) INDIA
(22) Date of filing of Application :03/04/2014
(21) Application No.2532/CHENP/2014 A
(43) Publication Date : 25/12/2015

(54) Title of the invention : ALLOYS

(51) International classification :B23K35/30
(31) Priority Document No :13151874.8
(32) Priority Date :18/01/2013
(33) Name of priority country :EPO
(86) International Application No :PCT/EP2014/050937
Filing Date :17/01/2014
(87) International Publication No :WO 2014/111538
(61) Patent of Addition to Application Number :NA
Filing Date :NA
(62) Divisional to Application Number :NA
Filing Date :NA

(71)**Name of Applicant :**
1)UMICORE AG & CO. KG
Address of Applicant :Rodenbacher Chaussee 4 63457 Hanau Wolfgang Germany
2)LEIBNIZ INSTITUT FR FESTK–RPER UND WERKSTOFFFORSCHUNG DRESDEN E.V.
(72)**Name of Inventor :**
1)WIEHL Gunther
2)SILZE Frank
3)KEMPF Bernd

(57) Abstract :
The invention relates to novel alloys which can be used in connection technology and which have improved wetting characteristics.

No. of Pages : 23 No. of Claims : 21

(12) PATENT APPLICATION PUBLICATION
(21) Application No.5990/CHE/2013 A
(19) INDIA
(22) Date of filing of Application :20/12/2013
(43) Publication Date : 25/12/2015

(54) Title of the invention : BIOCONVERSION OF ZINC ADDED FLUOROPHOSPHATE GLASSES AND METHOD OF MAKING THEREOF

(51) International classification :B22C
(31) Priority Document No :NA
(32) Priority Date :NA
(33) Name of priority country :NA
(86) International Application No :NA
Filing Date :NA
(87) International Publication No : NA
(61) Patent of Addition to Application Number :NA
Filing Date :NA
(62) Divisional to Application Number :NA
Filing Date :NA

(71)**Name of Applicant :**
1)PANDIAN BIO-MEDICAL RESEARCH CENTRE
Address of Applicant :36, SIVAGANGAI ROAD, MADURAI - 625 020 Tamil Nadu India
(72)**Name of Inventor :**
1)GURUSAMY RAJKUMAR
2)SANKARALINGAM PUGALANTHI PANDIAN

(57) Abstract :
The present invention discloses different composition of zinc added fluorophosphate glasses prepared using melt-quench method. The physico-chemical and bio conversion of zinc added fluorophosphate glasses were accessed using density measurements, ultrasonic measurements to determine elastic moduli, XRD patterns, FTIR spectra, XPS spectrograph, pH variations during 21 days of in vitro studies in SBF solution, SEM images and EDS spectra. Bioconversion was also accessed by in vivo studies of implantation of the optimized glass into animal bone for 10 weeks followed by SEM images, EDS spectra and CLSM images. The result obtained before, after in vitro and in vivo studies are discussed in terms of structure, stability, mechanical properties, bone bonding ability and bio conversion of the prepared glass samples. The sample ZnFp4 is found to be more ideal and better than other samples for future clinical use.

No. of Pages : 23 No. of Claims : 8

(12) PATENT APPLICATION PUBLICATION
(21) Application No.623/CHE/2014 A
(19) INDIA
(22) Date of filing of Application :10/02/2014
(43) Publication Date : 25/12/2015

(54) Title of the invention : DYNAMIC PREDICTIVE ANAYSIS IN PRE-BID OF ENTITES

(51) International classification	:G06F 17/00	(71)**Name of Applicant :**
(31) Priority Document No	:NA	**1)SAP AG**
(32) Priority Date	:NA	Address of Applicant :Dietmar-Hopp-Allee 16, Global Intellectual Property, Walldorf - 69190, Germany Germany
(33) Name of priority country	:NA	(72)**Name of Inventor :**
(86) International Application No	:NA	**1)Paul Pallath**
Filing Date	:NA	
(87) International Publication No	: NA	
(61) Patent of Addition to Application Number	:NA	
Filing Date	:NA	
(62) Divisional to Application Number	:NA	
Filing Date	:NA	

(57) Abstract :
DYNAMIC PREDICTIVE ANAYSIS IN PRE-BID OF ENTITIES Strategy parameters and weights associated with the strategy parameters are received in a predictive analytics application to dynamically rank entities. Raw values associated with the strategy parameters are normalized by applying transformation functions to get normalized values. Based on the normalized values and the weights associated with the strategy parameters, weighted normalized values are computed. Based on the weighted normalized values aggregate scores are computed. The entities based on the computed aggregate score are dynamically ranked. The dynamically ranked entities in descending order of aggregate scores are displayed in a user interface of the predictive analytics application.

No. of Pages : 33 No. of Claims : 20

(12) PATENT APPLICATION PUBLICATION
(19) INDIA
(22) Date of filing of Application :12/02/2014

(21) Application No.663/CHE/2014 A
(43) Publication Date : 25/12/2015

(54) Title of the invention : A SINGLE REMOTE CONTROL UNIT FOR CONTROLLING VARIOUS DEVICES

(51) International classification	:G06F	(71)**Name of Applicant :**
(31) Priority Document No	:NA	**1)Indian Institute of Technology Madras**
(32) Priority Date	:NA	Address of Applicant :Indian Institute of Technology Madras
(33) Name of priority country	:NA	(IIT Madras), IIT PO, Chennai - 600036 Tamil Nadu India
(86) International Application No	:NA	(72)**Name of Inventor :**
Filing Date	:NA	**1)Prof. Ashok Jhunjhunwala**
(87) International Publication No	: NA	**2)Dr. Lakshmi Narasamma**
(61) Patent of Addition to Application Number	:NA	
Filing Date	:NA	
(62) Divisional to Application Number	:NA	
Filing Date	:NA	

(57) Abstract :
Embodiments herein disclose a method and system for controlling different classes of appliances using a single remote control unit. More particularly, the remote control unit can be used for controlling (ON, OFF, increase, and decrease) different classes of home appliances without any modification to the existing electrical wiring or wireless system. Further, the user may select or deselect the required appliance from the remote control unit by choosing appropriate appliance-class button. Furthermore, the remote control unit can be pointed towards the respective appliance to perform intended operations on the appliance. FIG. 1

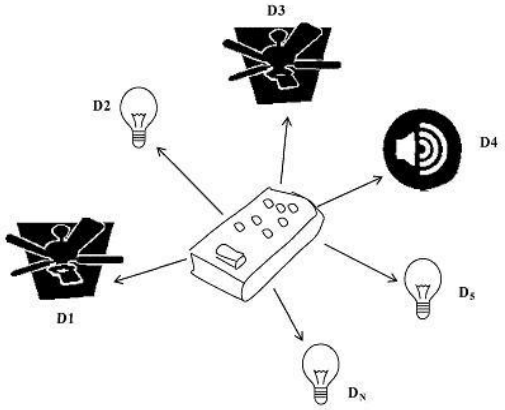

FIG. 1

No. of Pages : 34 No. of Claims : 12

(12) PATENT APPLICATION PUBLICATION
(19) INDIA
(22) Date of filing of Application :04/04/2014
(21) Application No.2595/CHENP/2014 A
(43) Publication Date : 25/12/2015

(54) Title of the invention : MECHANICAL WOUND THERAPY FOR SUB ATMOSPHERIC WOUND CARE SYSTEM

(51) International classification :A61M1/00,A61F13/02,A61L31/14
(31) Priority Document No :61/554080
(32) Priority Date :01/11/2011
(33) Name of priority country :U.S.A.
(86) International Application No :PCT/US2012/061770
Filing Date :25/10/2012
(87) International Publication No :WO 2013/066694
(61) Patent of Addition to Application Number :NA
Filing Date :NA
(62) Divisional to Application Number :NA
Filing Date :NA

(71)**Name of Applicant :**
1)J&M SHULER MEDICAL INC.
Address of Applicant :530 W. Cloverhurst Ave. Athens Georgia 30606 U.S.A.
(72)**Name of Inventor :**
1)SHULER Michael
2)FREEDMAN Brett

(57) Abstract :
A mechanical wound therapy (MWT) system includes a connection for a vacuum source which is routed through an airtight covering to a porous material positioned over the wound. The porous material may be a tubing network interspaced by a netting material constructed of biologically inert or bioabsorbable material. Alternatively the porous material may be a layered unified dressing in which layers of mesh netting or thin perforated film are separated and fixedly attached to functional elements of the dressing (e.g. irrigation tubing) or spacers. The vacuum and irrigation systems may be completely separated. An airtight sealing layer or foldable adhesive sealing layer may seal the dressing and facilitate sealing the dressing to the wound margins. Additional modular devices such as a wound approximating system positive pressure bladders and adjuvant therapy modules as well as enhanced monitoring technology can be added to synergistically increase the capabilities of each dressing.

No. of Pages : 132 No. of Claims : 158

(12) PATENT APPLICATION PUBLICATION
(19) INDIA
(22) Date of filing of Application :04/04/2014
(21) Application No.2596/CHENP/2014 A
(43) Publication Date : 25/12/2015

(54) Title of the invention : POLYCYCLIC PYRIDONE DERIVATIVE HAVING INTEGRASE INHIBITING ACTIVITY

(51) International classification :C07D498/14,A61K31/4985,A61K31/5365
(31) Priority Document No :2011224467
(32) Priority Date :12/10/2011
(33) Name of priority country :Japan
(86) International Application No :PCT/JP2012/076386
Filing Date :12/10/2012
(87) International Publication No :WO 2013/054862
(61) Patent of Addition to Application Number :NA
Filing Date :NA
(62) Divisional to Application Number :NA
Filing Date :NA

(71)**Name of Applicant :**
1)SHIONOGI & CO. LTD.
Address of Applicant :1 8 Doshomachi 3 chome Chuo ku Osaka shi Osaka 5410045 Japan
(72)**Name of Inventor :**
1)AKIYAMA Toshiyuki

(57) Abstract :
The present invention relates to a compound represented by formula (I 1) formula (I 2) or formula (I 3) having an antiviral effect or a pharmaceutically acceptable salt thereof and in further detail to a pyridone derivative having HIV integrase inhibiting activity and a drug particularly an anti HIV drug containing the derivative. The compound of the present invention has integrase inhibiting activity and/or cell propagation inhibiting activity against a virus particularly HIV or a resistant virus thereof. Thus the compound of the present invention is useful in the prevention or treatment of a variety of illnesses and viral infections (such as AIDS) in which integrase plays a role. (Each symbol in the formulas is as defined in the Specification.)

No. of Pages : 77 No. of Claims : 12

(12) PATENT APPLICATION PUBLICATION
(21) Application No.666/CHE/2014 A
(19) INDIA
(22) Date of filing of Application :12/03/2014
(43) Publication Date : 25/12/2015

(54) Title of the invention : JAGGERY COMPRICING INFLORESCENCE SAP AND THE PROCESS FOR PREPARING SAME

(51) International classification :A23D
(31) Priority Document No :NA
(32) Priority Date :NA
(33) Name of priority country :NA
(86) International Application No :NA
Filing Date :NA
(87) International Publication No : NA
(61) Patent of Addition to Application Number :NA
Filing Date :NA
(62) Divisional to Application Number :NA
Filing Date :NA

(71)**Name of Applicant :**
1)Registrar, Kerala Agricultural University
Address of Applicant :Vellanikkara, Thrissur, 680656 Kerala India
(72)**Name of Inventor :**
1)Dr. B. Jayaprakash Naik
2)Dr. P.R. Suresh
3)Dr. P.C. Balakrishnan
4)Dr. Madhu Subrahmanian
5)Dr. A.V. Meera Manjusha
6)Dr. George Mathew

(57) Abstract :
The present invention relates to Jaggery comprising of concentrated inflorescence sap and pH stabilizer wherein the sap is treated with slaked lime and the process for preparing the same.

No. of Pages : 18 No. of Claims : 7

(12) PATENT APPLICATION PUBLICATION
(19) INDIA
(22) Date of filing of Application :27/08/2013
(21) Application No.6926/CHENP/2013 A
(43) Publication Date : 25/12/2015

(54) Title of the invention : MEDIUM STORAGE/DISPENSING DEVICE AND MEDIUM PROCESSING DEVICE

(51) International classification :G06F
(31) Priority Document No :2012069688
(32) Priority Date :26/03/2012
(33) Name of priority country :Japan
(86) International Application No :PCT/JP20 12/08 1295
Filing Date :03/12/2012
(87) International Publication No :W O 2013/145449
(61) Patent of Addition to Application Number :NA
Filing Date :NA
(62) Divisional to Application Number :NA
Filing Date :NA

(71)**Name of Applicant :**
1)OKI ELECTRIC INDUSTRY CO. LTD.
Address of Applicant :1 7 12 Toranomon Minato ku Tokyo 1058460 Japan
(72)**Name of Inventor :**
1)SUETAKA Michio

(57) Abstract :
The objective of the present invention is to provide a medium storage/dispensing device and a medium processing device for which malfunctions are prevented more reliably than with the prior art. The present invention is provided with: a drum (21) that winds up two sets of tapes (28L 28R 30L 30R) together with paper currency (BL) which is sandwiched between the two sets of tapes (28L 28R 30L 30R); and torque limiters (25L 25R 27L 27R) which are provided separately for tape reels (24L 24R 26L 26R) and which control the torque between the tape reels (24L 24R 26L 26R) and reel rotary shafts (22 23) so as to achieve constant tension on each of the tapes (28L 28R 30L 30R) between each tape reel (24L 24R 26L 26R) and the drum (21). Thus the tension on each tape between the respective tape reel and the drum can be kept constant so the stability with which the medium is grasped can be improved and malfunctions can be prevented more reliably than with the prior art.

FIG.1

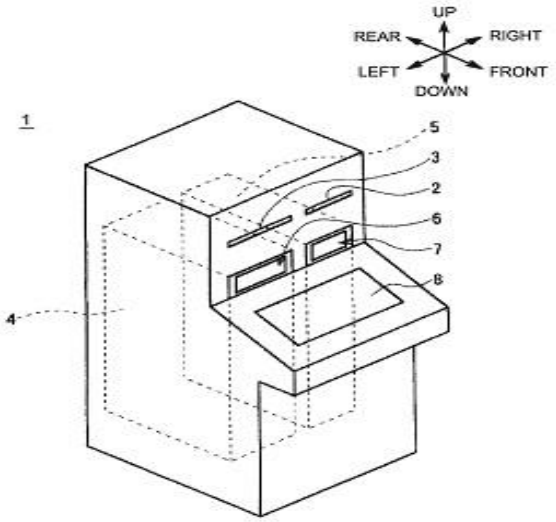

No. of Pages : 41 No. of Claims : 5

(12) PATENT APPLICATION PUBLICATION
(21) Application No.1770/CHE/2014 A
(19) INDIA
(22) Date of filing of Application :01/04/2014
(43) Publication Date : 25/12/2015

(54) Title of the invention : APPARATUS AND METHOD FOR PROVIDING ADDITIONAL INFORMATION BY USING CALLER PHONE NUMBER

(51) International classification	:G06R
(31) Priority Document No	:10-2013-0036935
(32) Priority Date	:04/04/2013
(33) Name of priority country	:Republic of Korea
(86) International Application No	:NA
Filing Date	:NA
(87) International Publication No	: NA
(61) Patent of Addition to Application Number	:NA
Filing Date	:NA
(62) Divisional to Application Number	:NA
Filing Date	:NA

(71)**Name of Applicant :**
1)SAMSUNG ELECTRONICS CO., LTD.
Address of Applicant :129, Samsung-ro, Yeongtong-gu, Suwon-si, Gyeonggi-do, 443-742, Republic of Korea. Republic of Korea
(72)**Name of Inventor :**
1)Jong-Se WON

(57) Abstract :
A method and apparatus for providing additional information regarding a caller phone number to allow a user to identify a caller are provided. The method includes searching, when a call is received from the caller phone number, for the caller phone number and a log related to communication performed prior to reception of the call, the communication-related log being stored in the portable device; and displaying, before call connection with the caller phone number is performed in response to reception of the call, the caller phone number and the communication-related log on a screen of the portable device.

No. of Pages : 47 No. of Claims : 15

(12) PATENT APPLICATION PUBLICATION
(19) INDIA
(22) Date of filing of Application :02/04/2014

(21) Application No.1771/CHE/2014 A
(43) Publication Date : 25/12/2015

(54) Title of the invention : AN ASSEMBLY FOR SUPPLYING FUEL TO AN ENGINE OF A VEHICLE

(51) International classification	:F02M	(71)**Name of Applicant :**
(31) Priority Document No	:NA	**1)Bosch Limited**
(32) Priority Date	:NA	Address of Applicant :Post Box No 3000, Hosur Road,
(33) Name of priority country	:NA	Adugodi, Bangalore 560030, Karnataka, INDIA Karnataka India
(86) International Application No	:NA	**2)Robert Bosch GmbH**
Filing Date	:NA	(72)**Name of Inventor :**
(87) International Publication No	: NA	**1)RAMACHANDRA Pradeep**
(61) Patent of Addition to Application Number	:NA	**2)REDDEMREDDY Pramod**
Filing Date	:NA	
(62) Divisional to Application Number	:NA	
Filing Date	:NA	

(57) Abstract :
The present invention discloses an assembly (10) to supply fuel comprising a fuel tank (12) storing the fuel, a fuel chamber (14) in fluid communication with the fuel tank (12) and a valve (16) controlling the fuel flow from the fuel tank (12) to the fuel chamber (14) based on the fuel level in the fuel chamber (14). A fuel metering unit (18) in fluid communication with the fuel chamber (14) is adapted to inject fuel to the engine. In one embodiment of the invention the fuel metering unit (18) is a fuel injector. Reference figure: Figure 1

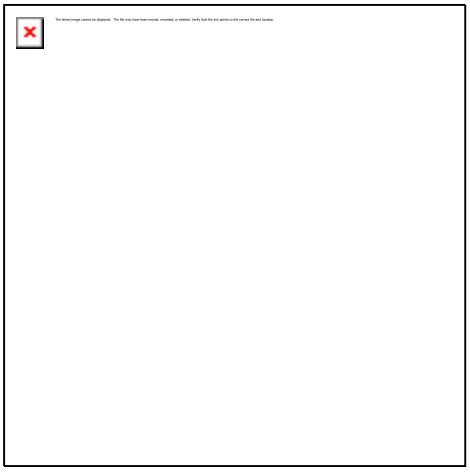

No. of Pages : 10 No. of Claims : 6

(12) PATENT APPLICATION PUBLICATION
(19) INDIA
(22) Date of filing of Application :21/01/2014

(21) Application No.496/CHENP/2014 A
(43) Publication Date : 25/12/2015

(54) Title of the invention : METHOD AND APPARATUS FOR ASSIGNMENT OF VIRTUAL RESOURCES WITHIN A CLOUD ENVIRONMENT

(51) International classification :G06F9/50
(31) Priority Document No :13/191599
(32) Priority Date :27/07/2011
(33) Name of priority country :U.S.A.
(86) International Application No :PCT/US2012/042864
Filing Date :18/06/2012
(87) International Publication No :WO 2013/015905
(61) Patent of Addition to Application Number :NA
Filing Date :NA
(62) Divisional to Application Number :NA
Filing Date :NA

(71)**Name of Applicant :**
1)ALCATEL LUCENT
Address of Applicant :3 avenue Octave Grard F 75007 Paris France
(72)**Name of Inventor :**
1)ALICHERRY Mansoor A.

(57) Abstract :
A virtual resource assignment capability is disclosed. The virtual re¬ source assignment capability is configured to support provisioning of virtual resources within a cloud environment (110). The provision¬ ing of virtual resources within a cloud environment includes receiving a user virtual resource request requesting provisioning of virtual re¬ sources within the cloud environment determining virtual resource assignment information specifying assignment of virtual resources within the cloud environment and provisioning the virtual resources within the cloud environment using the virtual resource assignment information. The assignment of the requested virtual resources with¬ in the cloud environment includes assignment of the virtual resource to datacenters (111) of the cloud environment in which the virtual resources will be hosted and more specifically to the physical re¬ sources within the datacenters of the cloud environment in which the virtual resources will be hosted. The virtual resources may include vir¬ tual processor resources virtual memory resources and the like. The physical resources may include processor resources (115) storage re¬ sources and the like (e.g. physical resources of blade servers (114) of racks (112) of datacenters of the cloud environment).

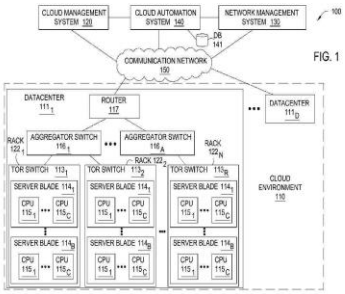

FIG. 1

No. of Pages : 50 No. of Claims : 10

(12) PATENT APPLICATION PUBLICATION
(19) INDIA
(22) Date of filing of Application :28/08/2013

(21) Application No.6934/CHENP/2013 A
(43) Publication Date : 25/12/2015

(54) Title of the invention : USE OF PHOSPHO AKT AS A BIOMARKER OF DRUG RESPONSE

(51) International classification	:C12Q1/48,G01N33/68,G01N33/574
(31) Priority Document No	:11160275.1
(32) Priority Date	:29/03/2011
(33) Name of priority country	:EPO
(86) International Application No	:PCT/EP2012/055522
Filing Date	:28/03/2012
(87) International Publication No	:WO 2012/130887
(61) Patent of Addition to Application Number	:NA
Filing Date	:NA
(62) Divisional to Application Number	:NA
Filing Date	:NA

(71)**Name of Applicant :**
1)BASILEA PHARMACEUTICA AG
Address of Applicant :Grenzacherstrasse 487 CH 4005 Basel Switzerland
(72)**Name of Inventor :**
1)BACHMANN Felix
2)LANE Heidi Alexandra

(57) Abstract :
1236454 5123 64545Use of phospho Akt as a biomarker for predicting the response such as resistance to a compound wherein phospho Akt is Akt that has been phosphorylated on one or more residues with the proviso that for Akt1 Akt2 and Akt3 the designation phospho Akt is used to indicate phosphorylation at a site other than T308 T309 or T305 respectively wherein the compound is a compound of general formula (I) wherein R represents phenyl thienyl or pyridinyl wherein phenyl is optionally substituted by one or two substituents independently selected from alkyl halo lower alkyl hydroxy lower alkyl lower alkoxy lower alkyl acyloxy lower alkyl phenyl hydroxy lower alkoxy hydroxy lower alkoxy lower alkoxy lower alkoxy phenyl lower alkoxy lower alkylcarbonyloxy amino monoalkylamino dialkylamino lower alkoxycarbonylamino lower alkylcarbonylamino substituted amino wherein the two substituents on nitrogen form together with the nitrogen heterocyclyl lower alkylcarbonyl carboxy lower alkoxycarbonyl cyano halogen and nitro; and wherein two adjacent substituents are methylenedioxy; and wherein pyridinyl is optionally substituted by lower alkoxy amino or halogen; X represents a group C=Y wherein Y stands for oxygen or nitrogen substituted by hydroxy or lower alkoxy; R represents hydrogen lower alkylcarbonyl hydroxy lower alkyl or cyano lower alkyl; R R and R represent hydrogen; R and R independently of each other represent hydrogen lower alkyi or lower alkoxy; or Rand R together represent methylenedioxy; and pharmaceutically acceptable derivatives thereof; or wherein R represents phenyl or pyridinyl wherein phenyl is optionally substituted by one or two substituents independently selected from alkyi halo lower alkyi hydroxy lower alkyi lower alkoxy lower alkyi acyloxy lower alkyi phenyl hydroxy lower alkoxy hydroxy lower alkoxy lower alkoxy lower alkoxy phenyl lower alkoxy lower alkylcarbonyloxy amino monoalkylamino dialkylamino lower alkoxycarbonylamino lower alkylcarbonylamino substituted amino wherein the two substituents on nitrogen form together with the nitrogen heterocyclyl lower alkylcarbonyl carboxy lower alkoxycarbonyl formyl cyano halogen and nitro; and wherein two adjacent substituents are methylenedioxy; and wherein pyridinyl is optionally substituted by lower alkoxy amino or halogen; X represents oxygen; R represents hydrogen lower alkylcarbonyl hydroxy lower alkyi or cyano lower alkyi; R Rand R represent hydrogen; R and R independently of each other represent hydrogen lower alkyi or lower alkoxy; or R and R together represent methylenedioxy; and pharmaceutically acceptable derivatives thereof. Methods of treatment of neoplastic and autoimmune diseases with these compounds are also disclosed.

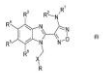

Figure 8

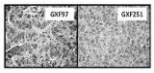

No. of Pages : 90 No. of Claims : 25

(12) PATENT APPLICATION PUBLICATION
(21) Application No.10139/CHENP/2012 A
(19) INDIA
(22) Date of filing of Application :03/12/2012
(43) Publication Date : 25/12/2015

(54) Title of the invention : TREATMENT OF VASCULARIZED PIGMENT EPITHELIAL DETACHMENT WITH ANTI-VEGF THERAPY

(51) International classification :A61K
(31) Priority Document No :61/361,295
(32) Priority Date :02/07/2010
(33) Name of priority country :U.S.A.
(86) International Application No :PCT/US2011/042787
Filing Date :01/07/2011
(87) International Publication No : NA
(61) Patent of Addition to Application Number :NA
Filing Date :NA
(62) Divisional to Application Number :NA
Filing Date :NA

(71)**Name of Applicant :**
1)GENENTECH INC.
Address of Applicant :1 DNA Way South San Francisco California 94080 U.S.A.
(72)**Name of Inventor :**
1)CHAN M.D. FACS Clement K.
2)ABRAHAM M.D. Prema

(57) Abstract :
TREATMENT OF VASCULARIZED PIGMENT EPITHELIAL DETACHMENT WITH ANTI-VEGF THERAPY Methods for treating vascularized pigment epithelial detachment using anti-VEGF agents are disclosed.

No. of Pages : 12 No. of Claims : 12

(12) PATENT APPLICATION PUBLICATION
(19) INDIA
(22) Date of filing of Application :10/03/2014
(21) Application No.1228/CHE/2014 A
(43) Publication Date : 25/12/2015

(54) Title of the invention : ULTRA HIGH SPEED METAL 3D PRINTERS WITH PHOTO SETTING POLYMERS

(51) International classification :H04M3/00
(31) Priority Document No :NA
(32) Priority Date :NA
(33) Name of priority country :NA
(86) International Application No :NA
Filing Date :NA
(87) International Publication No : NA
(61) Patent of Addition to Application Number :NA
Filing Date :NA
(62) Divisional to Application Number :NA
Filing Date :NA

(71)**Name of Applicant :**
1)EESAVYASA TECHNOLOGIES PVT. LTD.
Address of Applicant :PLOT NO: 79, PHASE-III, SVCIE, BALANAGAR, HYDERABAD, R.R. DISTRICT - 500 037 Andhra Pradesh India
(72)**Name of Inventor :**
1)D.P. CHAKRAVARTHY
2)BANDA RAVI SANKAR

(57) Abstract :
In the proposed invention photo setting polymers are mixed with metal powders. This mixture will be exposed 3D laser image of the object to be printed. When laser illuminated 3D images are focused on to the above mixture of materials, according to the image projected setting of polymers happens in fraction of seconds. The uniqueness of the technology is superimposing of 3Dj images with femto second laser sources. Different type of photo setting polymers are used to mix with required composition of metals or alloys.

No. of Pages : 7 No. of Claims : 8

(12) PATENT APPLICATION PUBLICATION
(19) INDIA
(22) Date of filing of Application :18/03/2014

(21) Application No.1424/CHE/2014 A
(43) Publication Date : 25/12/2015

(54) Title of the invention : Method and Device for sensing spectrum in a cognitive radio unit

(51) International classification :G08B
(31) Priority Document No :NA
(32) Priority Date :NA
(33) Name of priority country :NA
(86) International Application No :NA
Filing Date :NA
(87) International Publication No : NA
(61) Patent of Addition to Application Number :NA
Filing Date :NA
(62) Divisional to Application Number :NA
Filing Date :NA

(71)**Name of Applicant :**
1)SASTRA University
Address of Applicant :Tirumalaisamudram, Thanjavur 613 401, Tamil Nadu, India Tamil Nadu India
(72)**Name of Inventor :**
1)Hemalatha, M.
2)Prithiviraj, V.
3)Thenmozhi, K.

(57) Abstract :
The present invention describes a method and device (200) for spectrum sensing in a cognitive radio unit. The method includes extracting a pre-determined number of samples of a received radio frequency signal. A first set of values corresponding to said sample are derived, and thereafter sorted in a pre-determined order. For each value in the first set of values, a pair of values is derived based upon a likelihood ratio test so as to constitute a second set of values. A mean value of at least two consecutive values out of the first set of values is determined, wherein said consecutive values correspond to at least two consecutive pairs selected out of said second set of based upon a pre-determined variation between said selected consecutive pairs. Finally, an energy level in at least one frequency band is evaluated based upon the mean value to detect an unoccupied spectrum space.

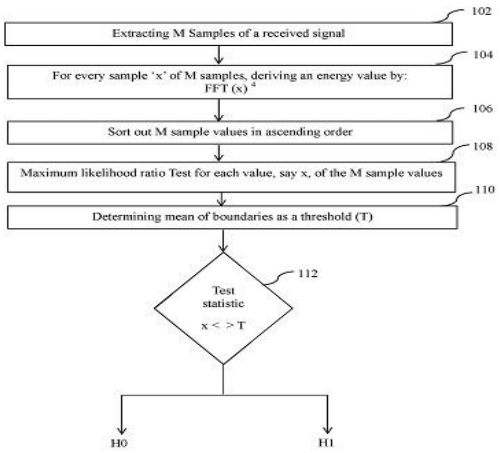

Fig. 1

No. of Pages : 23 No. of Claims : 13

(12) PATENT APPLICATION PUBLICATION
(21) Application No.264/CHE/2014 A
(19) INDIA
(22) Date of filing of Application :21/01/2014
(43) Publication Date : 25/12/2015

(54) Title of the invention : IMPROVED PROCESS FOR THE SYNTHESIS OF STROBILURIN FUNGICIDES VIZ KRESOXIM - METHYL, DIMOXYSTROBIN AND ORYSASTROBIN

(51) International classification :C07D
(31) Priority Document No :NA
(32) Priority Date :NA
(33) Name of priority country :NA
(86) International Application No :NA
Filing Date :NA
(87) International Publication No : NA
(61) Patent of Addition to Application Number :NA
Filing Date :NA
(62) Divisional to Application Number :NA
Filing Date :NA

(71)**Name of Applicant :**
1)RALLIS INDIA LTD.
Address of Applicant :RALLIS RESEARCH CENTRE, NO. 73/1C & 1D, BYREGOWDA INDUSTRIAL ESTATE, SRIGANDHANAGAR, HEGGANAHALLI, BANGALORE - 560 091 Karnataka India
(72)**Name of Inventor :**
1)KAMARAJ PASUMPON
2)SATAM VIJAY SHRIKANT
3)POONACHA MOHAN
4)VASANIA KAIZAD
5)DURAIRAJ SURESHKUMAR
6)NAIK PARAG
7)LUKKA KOTESHWARARAO
8)KADAM SUBHASH
9)HINDUPUR RAMA MOHAN
10)PRABHU VENKATESH MOODBIDRI
11)MANE AVINASH
12)PATI HARI NARAYAN

(57) Abstract :
The present invention relates to an improved process for the synthesis of strobilurin fungicides viz Kresoxim-methyl, Dimoxystrobin and Orysastrobin in good yield and high purity.

No. of Pages : 33 No. of Claims : 10

(12) PATENT APPLICATION PUBLICATION
(19) INDIA
(22) Date of filing of Application :11/02/2014
(21) Application No.633/CHE/2014 A
(43) Publication Date : 25/12/2015

(54) Title of the invention : PROCESS FOR PREPARING AMORPHOUS SOLID DISPERSION OF COBICISTAT

(51) International classification :A61K
(31) Priority Document No :NA
(32) Priority Date :NA
(33) Name of priority country :NA
(86) International Application No :NA
Filing Date :NA
(87) International Publication No : NA
(61) Patent of Addition to Application Number :NA
Filing Date :NA
(62) Divisional to Application Number :NA
Filing Date :NA

(71)**Name of Applicant :**
1)Dr. Reddy™s Laboratories Limited
Address of Applicant :Door No. 8-2-337, Road No 3, Banjara Hills, Hyderabad, Andhra Pradesh, INDIA Andhra Pradesh India
(72)**Name of Inventor :**
1)Vishweshwar Peddy
2)Rajesham Boge
3)Shirshendu Das Gupta

(57) Abstract :
The present application relates to amorphous solid dispersion of cobicistat with a polymer selected form a group of HPC, methacrylic acid, methyl cellulose and ethyl cellulose and process for the preparation thereof. Moreover, the present application relates to a pharmaceutical composition comprising amorphous solid dispersion of cobicistat with a polymer selected form a group of HPC, methacrylic acid, methyl cellulose and ethyl cellulose.

No. of Pages : 25 No. of Claims : 10

(12) PATENT APPLICATION PUBLICATION
(19) INDIA
(22) Date of filing of Application :30/08/2013
(21) Application No.7020/CHENP/2013 A
(43) Publication Date : 25/12/2015

(54) Title of the invention : PRIMARY AMINE DIAZENIUMDIOLATE HETEROCYCLIC DERIVATIVES

(51) International classification :C07D207/12,C07D207/48,C07D211/46
(31) Priority Document No :61/449915
(32) Priority Date :07/03/2011
(33) Name of priority country :U.S.A.
(86) International Application No :PCT/US2012/027658
Filing Date :05/03/2012
(87) International Publication No :WO 2012/122077
(61) Patent of Addition to Application Number :NA
Filing Date :NA
(62) Divisional to Application Number :NA
Filing Date :NA

(71)**Name of Applicant :**
1)MERCK SHARP & DOHME CORP.
Address of Applicant :126 East Lincoln Avenue Rahway New Jersey 07065 0907 U.S.A.
(72)**Name of Inventor :**
1)ALI Amjad
2)LO Michael Man Chu
3)WHITEHEAD Brent
4)SHAH Shrenik K.
5)HENDERSON Timothy J.
6)YAN Lin
7)GUO Zhiqiang

(57) Abstract :
A compound having the structure (I) useful for treating hypertension Pulmonary Arterial Hypertension (PAH) congestive heart failure conditions resulting from excessive water retention cardiovascular disease diabetes oxidative stress endothelial dysfunction cirrhosis pre eclampsia osteoporosis or nephropathy.

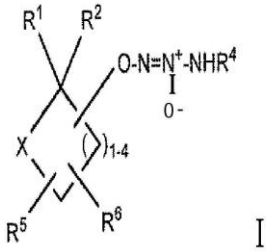

I

No. of Pages : 67 No. of Claims : 23

(12) PATENT APPLICATION PUBLICATION
(19) INDIA
(22) Date of filing of Application :03/04/2014
(21) Application No.1793/CHE/2014 A
(43) Publication Date : 25/12/2015

(54) Title of the invention : MAB-FCRN ASSAY

(51) International classification :C07K 16/00
(31) Priority Document No :NA
(32) Priority Date :NA
(33) Name of priority country :NA
(86) International Application No :NA
Filing Date :NA
(87) International Publication No : NA
(61) Patent of Addition to Application Number :NA
Filing Date :NA
(62) Divisional to Application Number :NA
Filing Date :NA

(71)**Name of Applicant :**
1)Dr. Reddy™s Laboratories Limited
Address of Applicant :8-2-337, Road No. 3, Banjara Hills, Hyderabad, Andhra Pradesh, India. Andhra Pradesh India
(72)**Name of Inventor :**
1)Satyam Subramanyam
2)Sridevi Khambhampaty
3)Rajesh Medisetty
4)Sravanthi Inturi
5)Sai Pusarla

(57) Abstract :
The present invention relates to methods and means for determining the relative binding activity of a therapeutic antibody based on the affinity of said antibody for a specific binding partner thereof. In particular, this invention relates to methods and means for use in FcRn binding assays wherein the competitive binding assay is performed between labelled Mab with F(ab™)2 immune complex and unlabeled therapeutic X-Mab with the F(ab™)2 immune complex to bind to the FcRn receptors. The assay as disclosed in tthe present invention picks up changes in Fc region like oxidation that impact FcRn binding. The assay is not influenced by minor differences in percent aggregates between therapeutic samples and hence be used for comparability assessment of one or more samples for binding to FcRn.

No. of Pages : 21 No. of Claims : 7

(12) PATENT APPLICATION PUBLICATION
(21) Application No.1794/CHE/2014 A
(19) INDIA
(22) Date of filing of Application :03/04/2014
(43) Publication Date : 25/12/2015

(54) Title of the invention : IMAGE PICKUP APPARATUS, LENS UNIT, AND METHODS OF CONTROLLING IMAGE PICKUP APPARATUS AND LENS UNIT

(51) International classification	:H04N 5/00
(31) Priority Document No	:2013-079723
(32) Priority Date	:05/04/2013
(33) Name of priority country	:Japan
(86) International Application No	:NA
Filing Date	:NA
(87) International Publication No	: NA
(61) Patent of Addition to Application Number	:NA
Filing Date	:NA
(62) Divisional to Application Number	:NA
Filing Date	:NA

(71)**Name of Applicant :**
1)CANON KABUSHIKI KAISHA
Address of Applicant :of 30-2, Shimomaruko 3-chome, Ohta-ku, Tokyo, Japan Japan
(72)**Name of Inventor :**
1)ODAKA, Yukio
2)YANO, Shinichiro

(57) Abstract :
An image pickup apparatus on which a lens unit is to be removably mounted includes an image pickup element, first focus detection means for performing a focus detection by a contrast detection method based on a signal output from the image pickup element, second focus detection means for performing a focus detection by a phase difference detection method based on a pair of image signals output from the image pickup element, and control means for performing a focus control based on an in-focus position detected by the first or second focus detection means, and the control means receives, from the mounted lens unit, first information related to a displacement of the in-focus position by the phase difference detection method and determines whether to use the second focus detection means for the focus control according to the first information.

No. of Pages : 63 No. of Claims : 14

(12) PATENT APPLICATION PUBLICATION
(21) Application No.2373/CHENP/2014 A
(19) INDIA
(22) Date of filing of Application :28/03/2014
(43) Publication Date : 25/12/2015

(54) Title of the invention : IMAGE ENCODING METHOD IMAGE ENCODING DEVICE IMAGE DECODING METHOD IMAGE DECODING DEVICE AND IMAGE ENCODING/DECODING DEVICE

(51) International classification :H04N7/32
(31) Priority Document No :61/543365
(32) Priority Date :05/10/2011
(33) Name of priority country :U.S.A.
(86) International Application No :PCT/JP2012/006005
Filing Date :21/09/2012
(87) International Publication No :WO 2013/051209
(61) Patent of Addition to Application Number :NA
Filing Date :NA
(62) Divisional to Application Number :NA
Filing Date :NA

(71)**Name of Applicant :**
1)PANASONIC CORPORATION
Address of Applicant :1006 Oaza Kadoma Kadoma shi Osaka 5718501 Japan
(72)**Name of Inventor :**
1)SUGIO Toshiyasu
2)NISHI Takahiro
3)SHIBAHARA Youji
4)TANIKAWA Kyoko
5)SASAI Hisao
6)MATSUNOBU Toru
7)TERADA Kengo

(57) Abstract :
An image encoding method comprises: a step for dividing a block to be encoded into a plurality of sub blocks; a step for obtaining for each of the sub blocks merge candidates that are candidates for a set consisting of a prediction direction a motion vector and a reference picture index; a step for selecting a merge candidate; and a step for adding an index for specifying the selected merge candidate to a bit stream. Executed in the step for obtaining the merge candidates are: first evaluation processing that evaluates for each of the blocks adjacent to the sub blocks whether the adjacent block is included in the block to be encoded and determines an adjacent block not included in the block to be encoded as a block to be merged; and first derivation processing that derives a first candidate as one of the merge candidates using the aforementioned set which was used in generating a prediction image for the block to be merged.

No. of Pages : 145 No. of Claims : 11

(12) PATENT APPLICATION PUBLICATION
(21) Application No.387/CHE/2014 A
(19) INDIA
(22) Date of filing of Application :29/01/2014
(43) Publication Date : 25/12/2015

(54) Title of the invention : VACCINE COMPOSITION FOR TRANSDERMAL ADMINISTRATION

(51) International classification	:A61K
(31) Priority Document No	:2013-020730
(32) Priority Date	:05/02/2013
(33) Name of priority country	:Japan
(86) International Application No	:NA
Filing Date	:NA
(87) International Publication No	: NA
(61) Patent of Addition to Application Number	:NA
Filing Date	:NA
(62) Divisional to Application Number	:NA
Filing Date	:NA

(71)**Name of Applicant :**
1)NITTO DENKO CORPORATION
Address of Applicant :1-2, SHIMOHOZUMI 1-CHOME, IBARAKI-SHI, OSAKA 567-8680 Japan
(72)**Name of Inventor :**
1)SHISHIDO, TAKUYA
2)OKUBO, KATSUYUKI
3)ASARI, DAISUKE
4)OKAZAKI, ARIMICHI
5)MAEDA, YOSHIKI
6)MATSUSHITA, KYOHEI
7)LI, WENJING
8)HORI, MITSUHIKO
9)SUGIYAMA, HARUO

(57) Abstract :
Disclosed is a vaccine composition for transdermal administration to induce cellular immunity, comprising an antigen, wherein Thl cell ratio in a model animal for immunological evaluation that received the composition is 10% or more.

No. of Pages : 123 No. of Claims : 10

(12) PATENT APPLICATION PUBLICATION
(19) INDIA
(22) Date of filing of Application :18/02/2014
(21) Application No.753/CHE/2014 A
(43) Publication Date : 25/12/2015

(54) Title of the invention : PHARMACEUTICAL COMPOSITIONS OF ASENAPINE

(51) International classification :C07D
(31) Priority Document No :NA
(32) Priority Date :NA
(33) Name of priority country :NA
(86) International Application No :NA
Filing Date :NA
(87) International Publication No : NA
(61) Patent of Addition to Application Number :NA
Filing Date :NA
(62) Divisional to Application Number :NA
Filing Date :NA

(71)**Name of Applicant :**
1)HETERO RESEARCH FOUNDATION
Address of Applicant :HETERO DRUGS LIMITED, HETERO CORPORATE, 7-2-A2, INDUSTRIAL ESTATES, SANATH NAGAR, HYDERABAD - 500 082 Andhra Pradesh India
(72)**Name of Inventor :**
1)PARTHASARADHI REDDY, BANDI
2)KHADGAPATHI, PODILI
3)SATYANARAYANA RAO, PATCHIGOLLA

(57) Abstract :
The present invention relates to liquid compositions of asenapine with one or more pharmaceutical ly acceptable excipients. More particularly, the present invention relates to liquid spray compositions comprising asenapine for administration through oral mucosa.

No. of Pages : 16 No. of Claims : 10

(12) PATENT APPLICATION PUBLICATION
(19) INDIA
(22) Date of filing of Application :07/11/2012
(21) Application No.3722/CHE/2012 A
(43) Publication Date : 25/12/2015

(54) Title of the invention : A SYSTEM AND A METHOD OF DISPLAYING PERSONALIZED ADVERTISEMENT OVER A NETWORK

(51) International classification :G06Q
(31) Priority Document No :NA
(32) Priority Date :NA
(33) Name of priority country :NA
(86) International Application No :NA
Filing Date :NA
(87) International Publication No : NA
(61) Patent of Addition to Application Number :NA
Filing Date :NA
(62) Divisional to Application Number :NA
Filing Date :NA

(71)**Name of Applicant :**
1)Venu Gopala Rao Somineni
Address of Applicant :C/o MyDeals247 2nd Floor 70 Tuscan Centre Infantry Road Bangalore 560001 Karnataka India. Karnataka India
(72)**Name of Inventor :**
1)Venu Gopala Rao Somineni

(57) Abstract :
The present invention relates to an online advertising by focusing on the personalized Advertisement display for the users i.e. totally based on the users personal preferences or interest at any given point in time. At the same time, it is a great advantage for the Advertiser to showcase the unique selling points or true differentiation factors about their products or services.

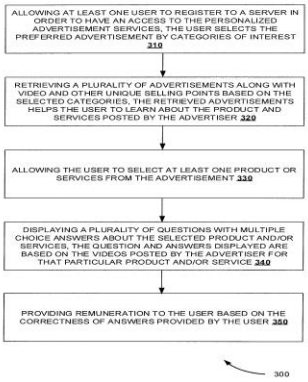

FIG. 3

No. of Pages : 35 No. of Claims : 8

(12) PATENT APPLICATION PUBLICATION
(21) Application No.392/CHE/2014 A
(19) INDIA
(22) Date of filing of Application :29/01/2014
(43) Publication Date : 25/12/2015

(54) Title of the invention : WT1 PEPTIDE CANCER VACCINE COMPOSITION FOR MUCOSAL ADMINISTRATION

(51) International classification :A61K
(31) Priority Document No :2013-020904
(32) Priority Date :05/02/2013
(33) Name of priority country :Japan
(86) International Application No :NA
Filing Date :NA
(87) International Publication No : NA
(61) Patent of Addition to Application Number :NA
Filing Date :NA
(62) Divisional to Application Number :NA
Filing Date :NA

(71)**Name of Applicant :**
1)NITTO DENKO CORPORATION
Address of Applicant :1-2, SHIMOHOZUMI 1-CHOME, IBARAKI-SHI, OSAK A567-8680 Japan
2)OSAKA UNIVERSITY
(72)**Name of Inventor :**
1)ASARI, DAISUKE
2)MATSUSHITA, KYOHEI
3)OKAZAKI, ARIMICHI
4)MAEDA, YOSHIKI
5)OKUBO, KATSUYUKI
6)HORI, MITSUHIKO
7)SUGIYAMA, HARUO

(57) Abstract :
The present invention provides a cancer vaccine composition for mucosal administration for inducing cellular immunity, comprising (i) a WT1 peptide and/or a modified WT1 peptide; and (ii) a cellular immunity induction promoter. The composition efficiently induces cellular immunity against a cancer in a subject.

No. of Pages : 140 No. of Claims : 8

(12) PATENT APPLICATION PUBLICATION
(19) INDIA
(22) Date of filing of Application :13/09/2013
(21) Application No.4117/CHE/2013 A
(43) Publication Date : 25/12/2015

(54) Title of the invention : REFINER PLATE WITH GRADUALLY CHANGING GEOMETRY

(51) International classification :D21D
(31) Priority Document No :61/701,825
(32) Priority Date :17/09/2012
(33) Name of priority country :U.S.A.
(86) International Application No :NA
Filing Date :NA
(87) International Publication No : NA
(61) Patent of Addition to Application Number :NA
Filing Date :NA
(62) Divisional to Application Number :NA
Filing Date :NA

(71)**Name of Applicant :**
1)ANDRITZ INC.
Address of Applicant :ONE NAMIC PLACE, GLENS FALLS, NEW YORK 12801 U.S.A.
(72)**Name of Inventor :**
1)GINGRRAS, LUC

(57) Abstract :
ABSTRACT A refiner plate segment with a continuous transition zone spanning from the periphery or near the periphery of the plate in a substantial spiral toward the axis of rotation of the plate adjacent the breaker bar zone.

No. of Pages : 30 No. of Claims : 21

(12) PATENT APPLICATION PUBLICATION
(19) INDIA
(22) Date of filing of Application :23/09/2013
(21) Application No.7684/CHENP/2013 A
(43) Publication Date : 25/12/2015

(54) Title of the invention : DRY SKIN CONDUCTANCE ELECTRODE

(51) International classification :A61B5/053
(31) Priority Document No :11156641.0
(32) Priority Date :02/03/2011
(33) Name of priority country :EPO
(86) International Application No :PCT/IB2012/050528
Filing Date :06/02/2012
(87) International Publication No :WO 2012/117304
(61) Patent of Addition to Application Number :NA
Filing Date :NA
(62) Divisional to Application Number :NA
Filing Date :NA

(71)**Name of Applicant :**
1)KONINKLIJKE PHILIPS N.V.
Address of Applicant :High Tech Campus 5 NL 5656 AE Eindhoven Netherlands
(72)**Name of Inventor :**
1)OUWERKERK Martin

(57) Abstract :
The present invention relates to a dry skin conductance electrode (12 13) for contacting the skin (10) of a user. In order to provide a dry skin conductance electrode for long term measurements which does not cause problems to the user while still providing a good signal level the electrode (12 13) comprises a material made of a noble metal doped with at least one dopant selected from the group consisting of hydrogen lithium sodium potassium rubidium caesium and beryllium. The present invention also relates to a skin conductance sensor (20) a wristband (30) and an emotional event detection system.

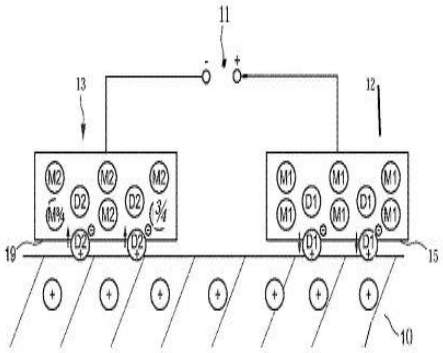

FIG. 1

No. of Pages : 24 No. of Claims : 15

(12) PATENT APPLICATION PUBLICATION
(19) INDIA
(22) Date of filing of Application :23/09/2013
(21) Application No.7685/CHENP/2013 A
(43) Publication Date : 25/12/2015

(54) Title of the invention : TIN PHOSPHATE GLASS CONTAINING EMBEDDED LUMINESCENT MATERIAL PARTICLES

(51) International classification :C03C14/00,C09K11/08,C09K11/77
(31) Priority Document No :11156628.7
(32) Priority Date :02/03/2011
(33) Name of priority country :EPO
(86) International Application No :PCT/IB2012/050920
Filing Date :28/02/2012
(87) International Publication No :WO 2012/117346
(61) Patent of Addition to Application Number :NA
Filing Date :NA
(62) Divisional to Application Number :NA
Filing Date :NA

(71)**Name of Applicant :**
1)KONINKLIJKE PHILIPS N.V.
Address of Applicant :High Tech Campus 5 NL 5656 AE Eindhoven Netherlands
(72)**Name of Inventor :**
1)BECKERS Lucas Johannes Anna Maria
2)OFFERMANS Paulus Hubertus Gerardus

(57) Abstract :
The invention provides a tin phosphate glass containing embedded luminescent material particles wherein the luminescent material particles comprise luminescent material from the class of CaAlSiN 3 :Eu 2+ and optionally other luminescent material particles. The invention further provides a method for the production of such glass as well as a lighting unit using such glass as (part of) a light conversion unit.

Fig 2a

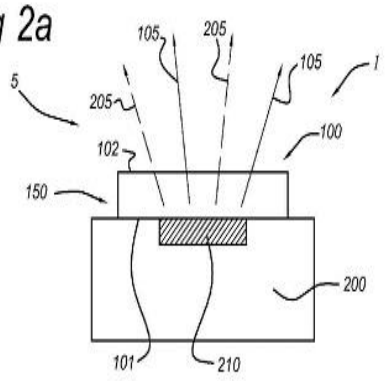

No. of Pages : 16 No. of Claims : 15

(12) PATENT APPLICATION PUBLICATION
(19) INDIA
(22) Date of filing of Application :23/09/2013
(21) Application No.7686/CHENP/2013 A
(43) Publication Date : 25/12/2015

(54) Title of the invention : VISUALIZATION FOR NAVIGATION GUIDANCE

(51) International classification :G06T7/00,G06T7/20,A61B6/00
(31) Priority Document No :11305223.7
(32) Priority Date :02/03/2011
(33) Name of priority country :EPO
(86) International Application No :PCT/IB2012/050855
Filing Date :24/02/2012
(87) International Publication No :WO 2012/117321
(61) Patent of Addition to Application Number :NA
Filing Date :NA
(62) Divisional to Application Number :NA
Filing Date :NA

(71)**Name of Applicant :**
1)KONINKLIJKE PHILIPS N.V.
Address of Applicant :High Tech Campus 5 NL 5656 AE Eindhoven Netherlands
(72)**Name of Inventor :**
1)CATHIER Pascal Yves Fran§ois
2)FLORENT Raoul

(57) Abstract :
The present invention relates to visualizing information of an object. In order to provide spatial information and in addition situation specific data to the user while ensuring an effective perceptibility a method (110) is provided comprising the steps of: a) providing (112) pre navigation data (114) of a region of interest of an object (22); wherein the pre navigation data comprises spatial geometrical data (116) and a functional parameter surface (118) in correspondence to the spatial geometrical data; b) acquiring (120) live image data (122) of the region of interest; c) detecting (124) an element (126) in the live image data; d) determining (128) spatial relation (130) of the pre navigation data and the live image data; e) determining (132) the position (134) of the detected element in the spatial geometrical data which determining is based on the spatial relation and computing (136) a predetermined related point of location (138) on the functional parameter surface; f) generating (140) a combination (142) of a simplified surface representation (144) of the region of interest which simplified surface representation is based on a visualization of the functional parameter surface and a marker (146) indicating the computed predetermined related point of location; and g) displaying (148) the combination as navigation guidance (150).

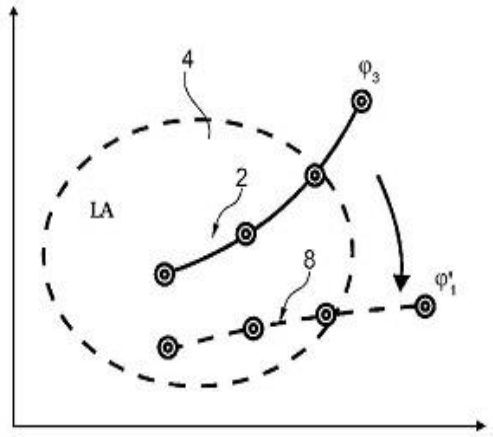

Fig. 3

No. of Pages : 29 No. of Claims : 15

(12) PATENT APPLICATION PUBLICATION
(19) INDIA
(22) Date of filing of Application :10/03/2014
(21) Application No.1233/CHE/2014 A
(43) Publication Date : 25/12/2015

(54) Title of the invention : SYNTHESIS OF FOLDABLE ORGANIC GRAPHENE LED DISPLAY SYSTEMS

(51) International classification :C01B31/00
(31) Priority Document No :NA
(32) Priority Date :NA
(33) Name of priority country :NA
(86) International Application No :NA
Filing Date :NA
(87) International Publication No : NA
(61) Patent of Addition to Application Number :NA
Filing Date :NA
(62) Divisional to Application Number :NA
Filing Date :NA

(71)**Name of Applicant :**
1)EESAVYASA TECHNOLOGIES PVT. LTD.
Address of Applicant :PLOT NO: 79, PHASE-III, SVCIE, BALANAGAR, HYDERABAD, R.R. DISTRICT - 500 037 Andhra Pradesh India
(72)**Name of Inventor :**
1)D.P. CHAKRAVARTHY
2)BANDA RAVI SANKAR
3)SANDEEP CHINNAM

(57) Abstract :
The proposed method is a synthetic root that combines graphene nano particles doping with aluminum tri quinolate materials. In a special nano furnace which has multiple electron beam guns under cryogenic conditions, quinoline aluminum salts are mixed with graphene nano particles to sputter the produce compound on any polymeric surface. The combination of aluminum salts with graphene act as OLED material and emits high luminescence intensity light. The polymeric surface enable the ease of flexibility to produce jfoldable display systems.

No. of Pages : 7 No. of Claims : 7

(12) PATENT APPLICATION PUBLICATION
(19) INDIA
(22) Date of filing of Application :21/01/2014
(21) Application No.475/CHENP/2014 A
(43) Publication Date : 25/12/2015

(54) Title of the invention : ANNULAR BARRIER WITH PRESSURE AMPLIFICATION

(51) International classification :E21B33/124,E21B23/06,E21B33/127
(31) Priority Document No :11179545.6
(32) Priority Date :31/08/2011
(33) Name of priority country :EPO
(86) International Application No :PCT/EP2012/066870
Filing Date :30/08/2012
(87) International Publication No :WO 2013/030283
(61) Patent of Addition to Application Number :NA
Filing Date :NA
(62) Divisional to Application Number :NA
Filing Date :NA

(71)**Name of Applicant :**
1)WELLTEC A/S
Address of Applicant :Gydevang 25 DK 3450 Aller¸d Denmark
(72)**Name of Inventor :**
1)HALLUNDB†K J¸rgen
2)HAZEL Paul
3)VASQUES Ricardo Reves

(57) Abstract :
The present invention relates to an annular barrier to be expanded in an annulus between a well tubular structure and an inside wall of a borehole for providing zone isolation between a first zone and a second zone of the borehole comprising a tubular part for mounting as part of the well tubular structure and having an expansion opening an expandable sleeve surrounding the tubular part each end of the expandable sleeve being connected with the tubular part and an annular barrier space between the tubular part and the expandable sleeve wherein the annular barrier further comprises a pressure intensifying means having an inlet in a first end in fluid communication with the expansion opening and having an outlet in a second end in fluid communication with the annular barrier space.

No. of Pages : 28 No. of Claims : 15

(12) PATENT APPLICATION PUBLICATION
(19) INDIA
(22) Date of filing of Application :29/10/2013
(21) Application No.4867/CHE/2013 A
(43) Publication Date : 25/12/2015

(54) Title of the invention : POROUS SCAFFOLD FOR TISSUE ENGINEERING

(51) International classification :A61L27/56
(31) Priority Document No :NA
(32) Priority Date :NA
(33) Name of priority country :NA
(86) International Application No :NA
Filing Date :NA
(87) International Publication No : NA
(61) Patent of Addition to Application Number :NA
Filing Date :NA
(62) Divisional to Application Number :NA
Filing Date :NA

(71)**Name of Applicant :**
1)SREE CHITRA TIRUNAL INSTITUTE FOR MEDICAL SCIENCES AND TECHNOLOGY
Address of Applicant :Biomedical Technology Wing, Poojappura, Thiruvananthapuram 695 012, India Kerala India
(72)**Name of Inventor :**
1)Prabha Damodaran Nair
2)Neena Aloysious

(57) Abstract :
This invention relates to a porous scaffold for tissue engineering, comprising an amino group containing biopolymer and a dialdehyde derivative of a polysaccharide.

No. of Pages : 16 No. of Claims : 10

(12) PATENT APPLICATION PUBLICATION
(19) INDIA
(22) Date of filing of Application :23/09/2013
(21) Application No.7688/CHENP/2013 A
(43) Publication Date : 25/12/2015

(54) Title of the invention : DETERMINATION OF A MAGNETIC RESONANCE IMAGING PULSE SEQUENCE PROTOCOL CLASSIFICATION

(51) International classification	:G01R33/54,G01R33/56,G06T7/00
(31) Priority Document No	:11156420.9
(32) Priority Date	:01/03/2011
(33) Name of priority country	:EPO
(86) International Application No	:PCT/IB2012/050782
Filing Date	:21/02/2012
(87) International Publication No	:WO 2012/117314
(61) Patent of Addition to Application Number	:NA
Filing Date	:NA
(62) Divisional to Application Number	:NA
Filing Date	:NA

(71)**Name of Applicant :**
1)KONINKLIJKE PHILIPS N.V.
Address of Applicant :High Tech Campus 5 NL 5656 AE Eindhoven Netherlands
2)PHILIPS INTELLECTUAL PROPERTY & STANDARDS GMBH
(72)**Name of Inventor :**
1)SENEGAS Julien
2)REMMELE Stefanie
3)LEE Michael

(57) Abstract :
A medical imaging device (300) comprising a magnetic resonance imaging system(302). The medical image device further comprises a memory(334) containing machine executable instructions (370 372 374 376 378 380 382 384 386) for execution by a processor (328). Execution of the instructions causes the processor to receive (100 204) a pulse sequence protocol (340). Execution of the instructions further causes the processor to determine (102 206) a pulse sequence type classification (342) descriptive of the pulse sequence protocol. Execution of the instructions further cause the processor to determine (104 208) a magnetic resonance contrast classification (344) wherein the choice of the magnetic resonance contrast classification depends upon the pulse sequence type classification. Execution of the instructions further causes the processor to determine (106 210) a pulse sequence protocol classification (346). The pulse sequence protocol classification is determined by the pulse sequence type classification and the magnetic resonance contrast classification.

No. of Pages : 35 No. of Claims : 15

(12) PATENT APPLICATION PUBLICATION
(19) INDIA
(22) Date of filing of Application :23/09/2013
(21) Application No.7689/CHENP/2013 A
(43) Publication Date : 25/12/2015

(54) Title of the invention : PATIENT DETERIORATION DETECTION

(51) International classification :A61B5/00
(31) Priority Document No :61/447836
(32) Priority Date :01/03/2011
(33) Name of priority country :U.S.A.
(86) International Application No :PCT/IB2012/050796
Filing Date :22/02/2012
(87) International Publication No :WO 2012/117316
(61) Patent of Addition to Application Number :NA
Filing Date :NA
(62) Divisional to Application Number :NA
Filing Date :NA

(71)**Name of Applicant :**
1)KONINKLIJKE PHILIPS N.V.
Address of Applicant :High Tech Campus 5 NL 5656 AE Eindhoven Netherlands
2)PHILIPS INTELLECTUAL PROPERTY & STANDARDS GMBH
(72)**Name of Inventor :**
1)GEGNER Guenter
2)HEBLER Sebastian

(57) Abstract :
A system (108) detects deterioration of a patient of a medical institution. A processor(152)receives attended physiological data for the patient from a user interface or a patient monitoring system (102) and obtains a baseline patient score from the attended physiological data and a scoring table. The scoring table is received from a memory (118). The processor (152) further receives physiological data including at least one of unattended physiological data and attended physiological data which includes measurements of one or more of the physiological parameters of the patient from a patient monitoring system (102) for the patient. Scores of the physiological data measurements are compared to corresponding most recent attended physiological data measurements using the scoring table. A clinician is notified of patient deterioration if the score of one or more physiological data measurements has deteriorated as compared to the scores of the corresponding most recent attended physiological data measurements.

No. of Pages : 34 No. of Claims : 20

(12) PATENT APPLICATION PUBLICATION
(19) INDIA
(22) Date of filing of Application :03/04/2014
(21) Application No.1788/CHE/2014 A
(43) Publication Date : 25/12/2015

(54) Title of the invention : MISMATCHED DIFFERENTIAL CIRCUIT

(51) International classification :H03F 3/00
(31) Priority Document No :61/814,756
(32) Priority Date :22/04/2013
(33) Name of priority country :U.S.A.
(86) International Application No :NA
Filing Date :NA
(87) International Publication No : NA
(61) Patent of Addition to Application Number :NA
Filing Date :NA
(62) Divisional to Application Number :NA
Filing Date :NA

(71)**Name of Applicant :**
1)SAMSUNG DISPLAY CO., LTD.
Address of Applicant :95, Samsung 2 Ro, Giheung-Gu, Yongin-City, Gyeonggi-Do, Republic of Korea Republic of Korea
(72)**Name of Inventor :**
1)HEKMAT, Mohammad
2)AMIRKHANY, Amir

(57) Abstract :
A differential amplifier including: a first amplifier leg including a first transistor, and a second amplifier leg including a second transistor. Here, the first transistor is configured to have a bulk potential different from a bulk potential of the second transistor. The first amplifier leg and the second amplifier leg, together, may be configured to differentially amplify a received differential input signal. The differential amplifier may be configured to have an input offset voltage, which corresponds to the difference between the bulk potential of the first transistor and the bulk potential of the second transistor. The differential amplifier may be at an input stage of a comparator.

No. of Pages : 36 No. of Claims : 18

(12) PATENT APPLICATION PUBLICATION
(21) Application No.6844/CHENP/2013 A
(19) INDIA
(22) Date of filing of Application :26/08/2013
(43) Publication Date : 25/12/2015

(54) Title of the invention : DOWNLOAD METHOD SYSTEM AND DEVICE FOR MOBILE TERMINAL

(51) International classification :H04L29/08
(31) Priority Document No :2011-10045443.9
(32) Priority Date :24/02/2011
(33) Name of priority country :China
(86) International Application No :PCT/CN2011/084720
Filing Date :27/12/2011
(87) International Publication No :WO 2012/113262 A1
(61) Patent of Addition to Application Number :NA
Filing Date :NA
(62) Divisional to Application Number :NA
Filing Date :NA

(71)**Name of Applicant :**
1)TENCENT TECHNOLOGY (SHENZHEN) COMPANY LIMITED
Address of Applicant :Room 403 East Block 2 SEG Park Zhenxing Road Futian District Shenzhen Guangdong 518044 China
(72)**Name of Inventor :**
1)YU Ning

(57) Abstract :
Disclosed are a download method system and device for a mobile terminal which belong to the technical field of communications. The method comprises: receiving a download request of a mobile terminal and judging whether local information comprises backup server information for a resource indicated by the download request; and when the locally saved information comprises the backup server information for the resource indicated by the download request sending the backup server information to the mobile terminal so that the mobile terminal downloads the resource according to the backup server information. The proxy download server comprises: a receiving module a judgment module and a sending module. The mobile terminal comprises a sending module and a download module. The download system comprises the mobile terminal and the proxy download server. Through the present invention a download speed and a bandwidth utilization rate of a browser of the mobile terminal are increased and the performance of the browser of the mobile terminal and the performance of the mobile terminal are improved.

No. of Pages : 30 No. of Claims : 26

(12) PATENT APPLICATION PUBLICATION
(19) INDIA
(22) Date of filing of Application :26/08/2013
(21) Application No.6845/CHENP/2013 A
(43) Publication Date : 25/12/2015

(54) Title of the invention : SINTERING ADDITIVES FOR CERAMIC DEVICES OBTAINABLE IN A LOW *PO*2 ATMOSPHERE

(51) International classification :H01M8/12,H01M4/88,C04B35/462
(31) Priority Document No :11002478.3
(32) Priority Date :24/03/2011
(33) Name of priority country :EPO
(86) International Application No :PCT/EP2012/001065
Filing Date :09/03/2012
(87) International Publication No :WO 2012/126579 A1
(61) Patent of Addition to Application Number :NA
Filing Date :NA
(62) Divisional to Application Number :NA
Filing Date :NA

(71)**Name of Applicant :**
1)TECHNICAL UNIVERSITY OF DENMARK
Address of Applicant :Anker Engelundsvej 1 Bldg. 101A DK 2800 Kgs. Lyngby Denmark
(72)**Name of Inventor :**
1)RAMOUSSE Severine
2)KLEMENS˜ Trine
3)LARSEN Halvor Peter

(57) Abstract :
p2p2The present invention provides a method for producing a ceramic device in a low Oatmosphere comprising the steps of: providing a composition comprising a base material and a transition metal; wherein the base material for the first layer is selected from the group consisting of zirconate cerate titanate lanthanate aluminate doped zirconia and/or doped ceria wherein the dopants are selected from the group of Ca Ga Sc Y and lanthanide elements; forming a first layer of said composition wherein said first layer is an electrolyte layer; forming at least one electrode layer or electrode precursor layer on one side or both sides of said first layer; and sintering the multilayer structure in a low 0 atmosphere; characterized in that: the amount of the transition metal is from 0.01 to 4 mol% based on the composition of the first layer; the oxygen partial pressure p02 is 1014 Pa or less; and the sintering temperature is in the range of from 700 to 1600°C.

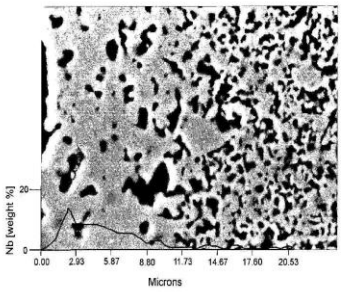

FIG.1

No. of Pages : 27 No. of Claims : 19

(12) PATENT APPLICATION PUBLICATION
(19) INDIA
(22) Date of filing of Application :24/09/2013
(21) Application No.7722/CHENP/2013 A
(43) Publication Date : 25/12/2015

(54) Title of the invention : VACUUM ASSISTED SLOT DIE COATING TECHNIQUES

(51) International classification :B05D1/26,B05C5/02,B05C11/10
(31) Priority Document No :13/088078
(32) Priority Date :15/04/2011
(33) Name of priority country :U.S.A.
(86) International Application No :PCT/EP2012/001599
Filing Date :12/04/2012
(87) International Publication No :WO 2012/139767
(61) Patent of Addition to Application Number :NA
Filing Date :NA
(62) Divisional to Application Number :NA
Filing Date :NA

(71)**Name of Applicant :**
1)ROCHE DIAGNOSTICS GMBH
Address of Applicant :Sandhofer Strae 116 68305 Mannheim Germany
2)F. HOFFMAN LA ROCHE AG
(72)**Name of Inventor :**
1)BUCILLI Sergio
2)JOSEPH Abner D.
3)WILSEY Christopher D.

(57) Abstract :
Systems apparatuses techniques and processes for applying a wet film (18) to a substrate (16) using a slot die (22) are provided. In one form the air pressure around at least a portion of the discharge end of the slot die is adjustable by the application of a vacuum force (23) in order to control the width and thickness of the wet film being applied to the substrate. In one aspect of this form the wet film is a narrow continuous stripe of reagent material applied to a moving web of the substrate from which a plurality of test elements will be obtained. However different forms and applications are also envisioned.

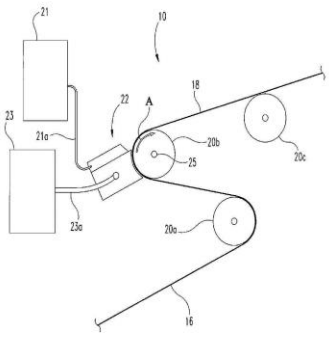

Fig. i

No. of Pages : 48 No. of Claims : 19

(12) PATENT APPLICATION PUBLICATION
(19) INDIA
(22) Date of filing of Application :28/08/2013

(21) Application No.6946/CHENP/2013 A
(43) Publication Date : 25/12/2015

(54) Title of the invention : SYSTEM AND METHOD FOR SESSION RESTORATION AT GEO REDUNDANT GATEWAYS

(51) International classification :H04W36/12,H04W36/00
(31) Priority Document No :61/454328
(32) Priority Date :18/03/2011
(33) Name of priority country :U.S.A.
(86) International Application No :PCT/US2012/029580
Filing Date :18/03/2012
(87) International Publication No :WO 2012/129136
(61) Patent of Addition to Application Number :NA
Filing Date :NA
(62) Divisional to Application Number :NA
Filing Date :NA

(71)**Name of Applicant :**
1)ALCATEL LUCENT
Address of Applicant :3 avenue Octave Grard F 75007 Paris France
(72)**Name of Inventor :**
1)KOMPELLA Vachaspati P.
2)SINHA Satyam
3)MULEY Praveen Vasant
4)NELAKONDA Sathyender

(57) Abstract :
A method and system for managing a backup service gateway (SGW) associated with a primary SGW comprising periodically receiving from the primary SGW at least a portion of corresponding UE session state information the received portion of session state information being sufficient to enable the secondary SGW to indicate to an inquiring management entity that all user sessions associated with a group of mobile devices supported by the primary SGW are in a live state; and in response to a failure of the primary SGW assuming management of IP addresses and paths associated with the primary SGW and causing each UE supported by the failed primary SGW to reauthorize itself to the network.

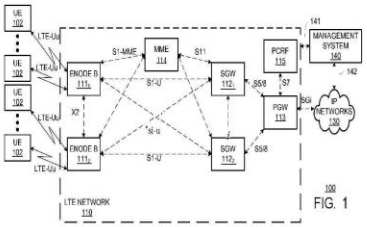

FIG. 1

No. of Pages : 41 No. of Claims : 10

(12) PATENT APPLICATION PUBLICATION
(21) Application No.711/CHE/2014 A
(19) INDIA
(22) Date of filing of Application :14/02/2014
(43) Publication Date : 25/12/2015

(54) Title of the invention : PANIC ALERT SYSTEM IN CASE OF EMERGENCY SITUATIONS

(51) International classification :G06F
(31) Priority Document No :NA
(32) Priority Date :NA
(33) Name of priority country :NA
(86) International Application No :NA
Filing Date :NA
(87) International Publication No : NA
(61) Patent of Addition to Application Number :NA
Filing Date :NA
(62) Divisional to Application Number :NA
Filing Date :NA

(71)**Name of Applicant :**
1)KALLARACKAL ABRAHAM ABRAHAM
Address of Applicant :KALARICKAL HOUSE, CHENGALAM, P.O., KOTTAYAM - 688 004 Kerala India
(72)**Name of Inventor :**
1)KALLARACKAL ABRAHAM ABRAHAM

(57) Abstract :
This invention relates to a technology used in Mobile phones /Tablets for providing security to persons. This technology can be used in Mobile Phones .This invention provides for a Panic Button in the mobile application . In case of any emergency, this panic button may be pressed and SMS will be send automatically to nearest police station /Police Control Room and to 3 other numbers saved in the Phone. This technology locate the exact location of the victim and will locate the nearest Police Station/Control Room and sends SMSs to these numbers detailing the exact location of the victim. The technology also tracks the movement of the victim once the Panic button is pressed and send SMSs to these numbers every 3 minutes. Thus the police or other people comes to know that the person is in danger . This will enable the Police and the concerned people to reach the exact spot easily and save the Victim

No. of Pages : 8 No. of Claims : 5

(12) PATENT APPLICATION PUBLICATION
(21) Application No.7653/CHENP/2013 A
(19) INDIA
(22) Date of filing of Application :20/09/2013
(43) Publication Date : 25/12/2015

(54) Title of the invention : BEAD SEALING METHOD METHOD FOR DETECTING TARGET MOLECULE ARRAY KIT AND TARGET MOLECULE DETECTION DEVICE

(51) International classification :G01N35/02,B01J19/00,G01N21/64
(31) Priority Document No :2011050629
(32) Priority Date :08/03/2011
(33) Name of priority country :Japan
(86) International Application No :PCT/JP2012/055884
Filing Date :07/03/2012
(87) International Publication No :WO 2012/121310
(61) Patent of Addition to Application Number :NA
Filing Date :NA
(62) Divisional to Application Number :NA
Filing Date :NA

(71)**Name of Applicant :**
1)JAPAN SCIENCE AND TECHNOLOGY AGENCY
Address of Applicant :1 8 Hon cho 4 chome Kawaguchi shi Saitama 3320012 Japan
(72)**Name of Inventor :**
1)NOJI Hiroyuki
2)IINO Ryota
3)ARAKI Suguru

(57) Abstract :
Abstract This invention provides a technique enabling to detect target molecules of low concentration with high sensitivity. This invention includes (i) a step of introducing a hydrophilic solvent (42) containing beads (40),(41) into a space (30) between (a) a lower layer section (10) including a plurality of receptacles (13) each of which is capable of storing only one of the beads (41),(41) and which are separated from each other by a side wall (12) having a hydrophobic upper surface and (b) an upper layer section (20) facing a surface of the lower layer section (10) on which surface the plurality of receptacles (13) are provided; and (ii) a step of introducing a hydrophobic solvent (43) into the space (30), the step (ii) being carried out after the step (i).

No. of Pages : 55 No. of Claims : 11

(12) PATENT APPLICATION PUBLICATION
(19) INDIA
(22) Date of filing of Application :04/10/2013

(21) Application No.8063/CHENP/2013 A
(43) Publication Date : 25/12/2015

(54) Title of the invention : DRIVER INTERACTION PERTAINING TO ECONOMICAL CRUISE CONTROL

(51) International classification :G06F
(31) Priority Document No :1150441-2
(32) Priority Date :16/05/2011
(33) Name of priority country :Sweden
(86) International Application No :PCT/SE2012/054488
Filing Date :09/05/2012
(87) International Publication No :WO 2012/158097 A1
(61) Patent of Addition to Application Number :NA
Filing Date :NA
(62) Divisional to Application Number :NA
Filing Date :NA

(71)**Name of Applicant :**
1)SCANIA CV AB
Address of Applicant :S-151 87 SODERTALJE Sweden
(72)**Name of Inventor :**
1)OSKAR JOHANSSON
2)MARIA SODERGREN
3)FREDRIK ROOS

(57) Abstract :
The present invention relates to a method for an economical cruise control and to an economical cruise control which demands from an engine system a reference speed vref which may differ from a chosen set speed vset. According to the invention, adjustment of at least said set speed vset is allowed when said reference speed vref differs from said set speed vset. The adjustment is based at least partly on input from a user of said economical cruise control. A user of the economical cruise control is thus provided with an increased feeling of control over the vehicles speed. Fig. 7

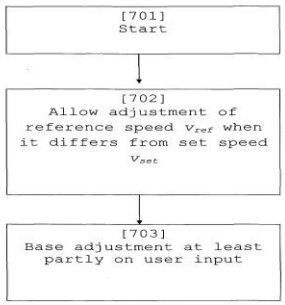

Fig. 7

No. of Pages : 39 No. of Claims : 21

(12) PATENT APPLICATION PUBLICATION
(21) Application No.10701/CHENP/2012 A
(19) INDIA
(22) Date of filing of Application :24/12/2012
(43) Publication Date : 25/12/2015

(54) Title of the invention : CONTROLLING THE ACCESS TO A USER INTERFACE FOR ATMOSPHERE CONTROL WITH AN ATMOSPHERE CREATION SYSTEM

(51) International classification :G06F
(31) Priority Document No :10167352.3
(32) Priority Date :25/06/2010
(33) Name of priority country :EPO
(86) International Application No :PCT/IB2011/052760
Filing Date :23/06/2011
(87) International Publication No :WO/2011/161643
(61) Patent of Addition to Application Number :NA
Filing Date :NA
(62) Divisional to Application Number :NA
Filing Date :NA

(71)**Name of Applicant :**
1)KONINKLIJKE PHILIPS ELECTRONICS N.V.
Address of Applicant :GROENEWOUDSEWEG 1 EINDHOVEN EINDHOVEN 5621 BA NETHERLANDS Netherlands
(72)**Name of Inventor :**
1)SOROKIN Mikhail Victorovich
2)VAN HOOF Willem Piet

(57) Abstract :
The invention relates to accessing user interfaces for atmosphere controlling particularly to comfortably accessing dedicated user interfaces of a complex atmosphere control system. A basic idea of the invention is to provide several user interfaces each of which is provided for a certain control configuration for atmosphere control with an atmosphere creation system and to control the access to the user interfaces. In an embodiment of the invention a system for controlling the access to a user interface for atmosphere control with an atmosphere creation system (10) which is provided to create atmospheres in an environment is provided wherein the user interface access control system comprises - several user interfaces (12) wherein each use interface is provided for a certain control configuration for atmosphere control with the atmosphere creation system - several access control codes (14 16) Fig.1

No. of Pages : 17 No. of Claims : 15

(12) PATENT APPLICATION PUBLICATION
(19) INDIA
(22) Date of filing of Application :03/03/2014

(21) Application No.1071/CHE/2014 A
(43) Publication Date : 25/12/2015

(54) Title of the invention : METHOD OF STORING AND RETRIEVING INPUT DATA IN AN ELECTRONIC DEVICE AND THE ELECTRONIC DEVICE THEREOF

(51) International classification :G06C
(31) Priority Document No :NA
(32) Priority Date :NA
(33) Name of priority country :NA
(86) International Application No :NA
Filing Date :NA
(87) International Publication No : NA
(61) Patent of Addition to Application Number :NA
Filing Date :NA
(62) Divisional to Application Number :NA
Filing Date :NA

(71)**Name of Applicant :**
1)SAMSUNG R&D INSTITUTE INDIA BANGALORE PRIVATE LIMITED
Address of Applicant :# 2870, ORION Building, Bagmane Constellation Business Park, Outer Ring Road, Doddanakundi Circle, Marathahalli Post, Bangalore -560037, Karnataka, India Karnataka India
(72)**Name of Inventor :**
1)KIZHAKKEMADAM, Sriram
2)NAGARAJ, Nithin

(57) Abstract :
The present invention provides a method and system for encoding and decoding of sparse and non-sparse data using compressed sensing. The method includes designing measurement matrices for compressed sensing using prime number theory, modifying the designed measurement matrices, encoding non sparse data and decoding the original input data with a zero error for integer data-type using compressed sensing. The method further includes encoding non sparse data and decoding the original input data with a very high accuracy for real-valued data-type using compressed sensing. Figure 1

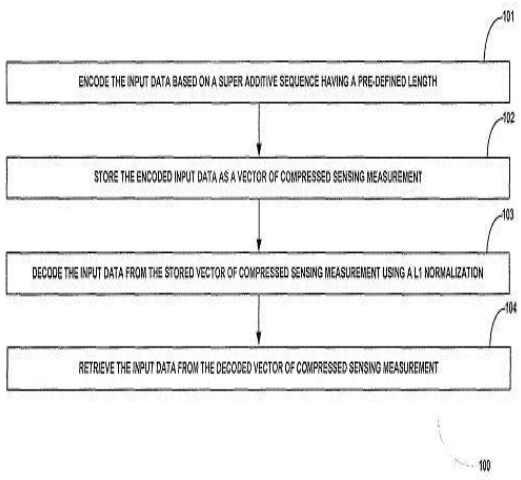

FIGURE 1

No. of Pages : 31 No. of Claims : 17

(12) PATENT APPLICATION PUBLICATION
(19) INDIA
(22) Date of filing of Application :20/01/2014
(21) Application No.220/CHE/2014 A
(43) Publication Date : 25/12/2015

(54) Title of the invention : LAMP HOME MECHANISM FOR VEHICLES

(51) International classification :B60Q1/124
(31) Priority Document No :NA
(32) Priority Date :NA
(33) Name of priority country :NA
(86) International Application No :NA
Filing Date :NA
(87) International Publication No : NA
(61) Patent of Addition to Application Number :NA
Filing Date :NA
(62) Divisional to Application Number :NA
Filing Date :NA

(71)**Name of Applicant :**
1)M/S TVS MOTOR COMPANY LIMITED
Address of Applicant :NO. 29, HADDOWS ROAD, CHENNAI - 600 006 Tamil Nadu India
(72)**Name of Inventor :**
1)DIPANJAN MAZUMDAR
2)PRAMILA RAO NILESHWAR
3)ARUMUGAM SIVAKUMAR

(57) Abstract :
The present invention illustrates a limp home mechanism for vehicles without manual starting system by using two batteries for single charging system. This is achieved by adding two components, i.e. an electro mechanical relay and a diode module to the two wheeler system. The limp home mode can be easily fixed as a kit after the vehicle has been sold and the cost of the relay and diode module is substantially less. Based on customer preference, if a secondary battery is available, the limp home mode can be activated by simply switching ON the emergency switch when the primary battery fails due to one or more reasons. Figure 1

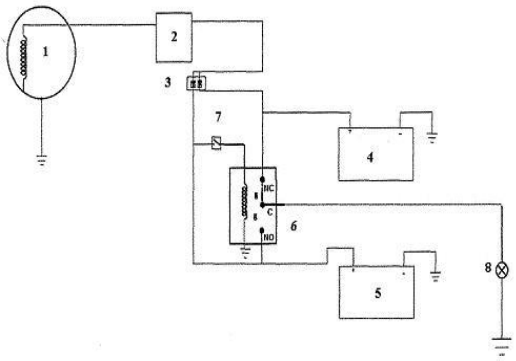

Figure 1

No. of Pages : 12 No. of Claims : 10

(12) PATENT APPLICATION PUBLICATION
(19) INDIA
(22) Date of filing of Application :26/08/2013
(21) Application No.6850/CHENP/2013 A
(43) Publication Date : 25/12/2015

(54) Title of the invention : METHODS FOR THE PREPARATION OF BENDAMUSTINE

(51) International classification :C07D235/16
(31) Priority Document No :61/437809
(32) Priority Date :31/01/2011
(33) Name of priority country :U.S.A.
(86) International Application No :PCT/US2012/021686
Filing Date :18/01/2012
(87) International Publication No :WO 2012/106117
(61) Patent of Addition to Application Number :NA
Filing Date :NA
(62) Divisional to Application Number :NA
Filing Date :NA

(71)**Name of Applicant :**
1)CEPHALON INC.
Address of Applicant :41 Moores Road P.O. Box 4011 Frazer Pennsylvania 19355 U.S.A.
(72)**Name of Inventor :**
1)GAYRING Anton H.
2)MILLER Scott A.

(57) Abstract :
Improved methods for the preparation and purification of bendamustine hydrochloride are described; such as method of preparing bendamustine hydrochloride comprising contacting a compound of formula HB1: with thionyl chloride

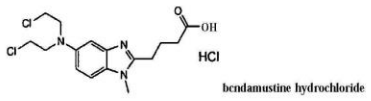

bendamustine hydrochloride

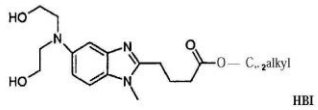

HBI

No. of Pages : 20 No. of Claims : 27

(12) PATENT APPLICATION PUBLICATION
(19) INDIA
(22) Date of filing of Application :08/10/2013
(21) Application No.8151/CHENP/2013 A
(43) Publication Date : 25/12/2015

(54) Title of the invention : TARGET TRACKING RADAR CLASSIFIER WITH GLINT DETECTION AND METHOD FOR CLASSIFICATION

(51) International classification :G01S13/00
(31) Priority Document No :13/087527
(32) Priority Date :15/04/2011
(33) Name of priority country :U.S.A.
(86) International Application No :PCT/US2012/025200
Filing Date :15/02/2012
(87) International Publication No :WO 2012/141787
(61) Patent of Addition to Application Number :NA
Filing Date :NA
(62) Divisional to Application Number :NA
Filing Date :NA

(71)**Name of Applicant :**
1)RAYTHEON COMPANY
Address of Applicant :870 Winter Street Waltham Massachusetts 02451 1449 U.S.A.
(72)**Name of Inventor :**
1)YOUNG Brett J.
2)JOHNSON Jason A.

(57) Abstract :
Embodiments of a target classifier and method for target classification using measured target epsilons and target glint information are generally described herein. The target classifier is configured to compare a total epsilon measurement with target glint information to determine whether to the target being tracked corresponds to an intended target type. Based on the comparison the target classifier may cause target tracking circuitry of a target tracking radar to either continue tracking the target or break off from tracking the target. Glint of different target types may be characterized at different ranges and the target s glint characteristics may be used to distinguish intended from non intended targets. Accordingly intended targets such as incoming artillery may be distinguished from non intended targets such as aircraft to help prevent countermeasures from being launched against non intended targets.

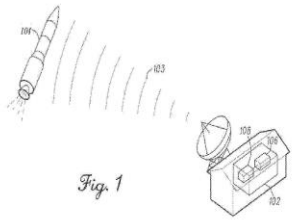

Fig. 1

No. of Pages : 26 No. of Claims : 18

(12) PATENT APPLICATION PUBLICATION
(21) Application No.4435/CHE/2013 A
(19) INDIA
(22) Date of filing of Application :30/09/2013
(43) Publication Date : 25/12/2015

(54) Title of the invention : ELECTRICAL ENERGY CYCLING MODULE / SELF RECHARGEABLE SYSTEM

(51) International classification :H01M
(31) Priority Document No :NA
(32) Priority Date :NA
(33) Name of priority country :NA
(86) International Application No :NA
Filing Date :NA
(87) International Publication No : NA
(61) Patent of Addition to Application Number :NA
Filing Date :NA
(62) Divisional to Application Number :NA
Filing Date :NA

(71)**Name of Applicant :**
1)J. ALEXANDER
Address of Applicant :26/9, RV. NAGAR, PUDU PUDUR ROAD, PERIYANICKEN PALAYAM, COIMBATORE - 641 020 Tamil Nadu India
(72)**Name of Inventor :**
1)J. ALEXANDER

(57) Abstract :
In Nature whatever produces, multiplies. My thought is why not multiply Electric Energy on the fact that Electricity can produce Electricity (example : by using transformers) than again we need to know one very important thing , take for example an apple seed , we know an apple seed can produce a tree with plenty of apples on it. that means plenty of apple seeds multiplied, so something that produces multiplies, law of nature. Apple seed never grows in a open space, it needs to be buried in soil and water added to soil. Something that the apple seed needs to multiply itself in the form of a tree with plenty of apples on it, is called condition to multiply. So in nature if something multiplies, it multiplies only on certain condition. Finding what is the condition for Electric Energy to be multiplied is the key to Self Sustainable Electric Energy Generators. Amazingly I discovered Low Resistance Circuit Environment is the condition for Electric Energy to be Multiplied. So the laws of nature is same to all that produce . Amazing isnt. Does Electric Energy Multiplied in Low Resistance Environment Condition be used usefully (example : for running a fan , tv..ext., .) .Yes of course it can be. Self Rechargeable Electric Energy Producing System which a. Self Sustainable Electric Energy Generator, Multiplies Electric Energy in R a Low Resistance Circuit Environment Condition,.

No. of Pages : 22 No. of Claims : 10

(12) PATENT APPLICATION PUBLICATION
(21) Application No.4752/CHE/2013 A
(19) INDIA
(22) Date of filing of Application :22/10/2013
(43) Publication Date : 25/12/2015

(54) Title of the invention : TWIN IMPACE MODEL OF EMBEDDED NUTRIFILM BIOREACTOR CURTAILING HEAT TRANSFER PROBLEM DURING MICROBIAL SOLID STATE BIOPROCESSES

(51) International classification :A01J
(31) Priority Document No :NA
(32) Priority Date :NA
(33) Name of priority country :NA
(86) International Application No :NA
Filing Date :NA
(87) International Publication No : NA
(61) Patent of Addition to Application Number :NA
Filing Date :NA
(62) Divisional to Application Number :NA
Filing Date :NA

(71)**Name of Applicant :**
1)DR. KESAVAPILLAI BALAKRISHNAN
Address of Applicant :BANNARI AMMAN INSTITUTE OF TECHNOLOGY, SATHYAMANGALAM 638 401 Tamil Nadu India
(72)**Name of Inventor :**
1)DR. KESAVAPILLAI BALAKRISHNAN
2)KUMAR RAHUL
3)RATHINASWAMY AGALYA DEVI
4)BASKARAN ABINAYA

(57) Abstract :
Design and development of a bioreactor assembly capable of positively influencing the heat transfer during the solid state fermentation (SSF) resulted in the prototyping of Embedded Nutrifilm Bioreactor (ENFB) where microbes remain embedded in nutri-films made of extracts of natural agro-process residues. Aqueous extracts of agro-process residues in pre-decided proportions with fortifying agent/s was inoculated with microbes for uniformly coating as thin nutrifilm on the process side of thin metallic discs containing uniform randomly made perforations. Sandwiches of less effectively thermal conducting central nutrifilm guarded on either side by finely heat conducting discs with random perforations form what are called as nutri-pack units (NPUs). The compact assemblage of NPUs kept in series inside a sterile chamber maintaining both desired humidity & uniform spray of sterile air all across the NPUs is ENBR. The twin advantages in the design assisting the transfer of the process heat developed during SSF include (1) the bioprocess milieu is in close proximity to the metal matrices (2) consistent air bath occurring through perforations & the gaps in the edges between the discs in NPUs. Both conventional formats & evolution towards the design of the ENFB prototype were tested for confirming the efficiency of ENFB.

No. of Pages : 11 No. of Claims : 10

(12) PATENT APPLICATION PUBLICATION
(19) INDIA
(22) Date of filing of Application :14/10/2013
(21) Application No.8279/CHENP/2013 A
(43) Publication Date : 25/12/2015

(54) Title of the invention : NONAQUEOUS ELECTROLYTE SOLUTION ELECTRICITY STORAGE DEVICE USING SAME AND TRIFLUOROMETHYLBENZENE COMPOUND

(51) International classification	:H01M10/0525,C07C69/96,C07C309/66
(31) Priority Document No	:2011096628
(32) Priority Date	:22/04/2011
(33) Name of priority country	:Japan
(86) International Application No	:PCT/JP2012/058566
Filing Date	:30/03/2012
(87) International Publication No	:WO 2012/144306
(61) Patent of Addition to Application Number	:NA
Filing Date	:NA
(62) Divisional to Application Number	:NA
Filing Date	:NA

(71)**Name of Applicant :**
1)UBE INDUSTRIES LTD.
Address of Applicant :1978 96 Oaza Kogushi Ube shi Yamaguchi 7558633 Japan
(72)**Name of Inventor :**
1)ABE Koji

(57) Abstract :
1x1x1The present invention provides: a nonaqueous electrolyte solution which is capable of improving electrochemical characteristics over a wide temperature range; an electricity storage device which uses the nonaqueous electrolyte solution; and a specific trifluoromethylbenzene compound. The present invention provides: a nonaqueous electrolyte solution which is obtained by dissolving an electrolyte salt in a nonaqueous solvent and which is characterized by containing one or more kinds of halogenated alkylbenzene compounds represented by general formula (I); an electricity storage device which uses the nonaqueous electrolyte solution; and a specific trifluoromethylbenzene compound. (In the formula Y represents an alkoxycarbonyl group having 2 8 carbon atoms an alkenyloxycarbonyl group having 3 9 carbon atoms an alkynyloxycarbonyl group having 4 9 carbon atoms an aryloxycarbonyl group having 7 12 carbon atoms an alkanesulfonyl group having 1 6 carbon atoms or an arylsulfonyl group having 6 12 carbon atoms; R represents a halogenated alkyl group having 1 4 carbon atoms; and n represents an integer of 1 5. In this connection in cases where Y is an alkoxycarbonyl group having 2 12 carbon atoms or an aryloxycarbonyl group having 6 12 carbon atoms R has one carbon atom. In the substituent represented by Y at least one hydrogen atom may be substituted by a halogen atom.)

No. of Pages : 70 No. of Claims : 9

(12) PATENT APPLICATION PUBLICATION
(19) INDIA
(22) Date of filing of Application :02/09/2013

(21) Application No.7036/CHENP/2013 A
(43) Publication Date : 25/12/2015

(54) Title of the invention : VASCULAR AND BODILY DUCT TREATMENT DEVICES AND METHODS

(51) International classification :A61F2/01
(31) Priority Document No :13/021364
(32) Priority Date :04/02/2011
(33) Name of priority country :U.S.A.
(86) International Application No :PCT/US2012/023858
Filing Date :03/02/2012
(87) International Publication No :WO 2012/106657
(61) Patent of Addition to Application Number :NA
Filing Date :NA
(62) Divisional to Application Number :NA
Filing Date :NA

(71)**Name of Applicant :**
1)CONCENTRIC MEDICAL INC.
Address of Applicant :301 East Evelyn Avenue Mountain View California 94041 U.S.A.
(72)**Name of Inventor :**
1)GRANDFIELD Ryan M.
2)WILSON Scott D.
3)SANDERS Elliot H.
4)MILLER John H.

(57) Abstract :
Devices including but not limited to a self expandable member having a proximal end portion and a main body portion. The self expandable member is movable from a first delivery position to a second placement position in the first delivery position the expandable member being in an unexpanded position and having a nominal first diameter and in the second position the expandable member being in a radially expanded position and having a second nominal diameter greater than the first nominal diameter for deployment within a vessel or duct of a patient. The expandable member includes a plurality of cell structures with the cell structures in the main body portion extending circumferentially around a longitudinal axis of the expandable member and the cell structures in the proximal end portion extending less than circumferentially around the longitudinal axis of the expandable member.

No. of Pages : 197 No. of Claims : 46

(12) PATENT APPLICATION PUBLICATION
(19) INDIA
(22) Date of filing of Application :25/09/2013
(21) Application No.7764/CHENP/2013 A
(43) Publication Date : 25/12/2015

(54) Title of the invention : METHOD FOR PURIFYING L CYSTEINE

(51) International classification :C07C319/28,C07C323/58
(31) Priority Document No :10 2011 007 790.1
(32) Priority Date :20/04/2011
(33) Name of priority country :Germany
(86) International Application No :PCT/EP2012/057109
Filing Date :19/04/2012
(87) International Publication No :WO 2012/143412
(61) Patent of Addition to Application Number :NA
Filing Date :NA
(62) Divisional to Application Number :NA
Filing Date :NA

(71)**Name of Applicant :**
1)WACKER CHEMIE AG
Address of Applicant :Hanns Seidel Platz 4 81737 M¼nchen Germany
(72)**Name of Inventor :**
1)LEUTE Maria
2)B–HM Andreas

(57) Abstract :
The invention relates to a method for producing a purified solution containing L cysteine from a fermentation broth containing L cysteine. In said method the fermentation broth containing L cysteine at a pH value from pH 6 to 9 is brought in contact with a basic anion exchanger wherein the L cysteine bonds to the anion exchanger. The anion exchanger is then rinsed with a first washing solution and the bonded L cysteine is removed from the anion exchanger by means of an acid and transferred into an eluate. Said eluate having a pH = 4 is brought in contact with an acidic cation exchanger wherein the L cysteine bonds to the cation exchanger. The cation exchanger is rinsed with a second washing solution and the bonded L cysteine is removed from the cation exchanger by means of a strong acid.

No. of Pages : 16 No. of Claims : 8

(12) PATENT APPLICATION PUBLICATION
(21) Application No.8614/CHENP/2013 A
(19) INDIA
(22) Date of filing of Application :25/10/2013
(43) Publication Date : 25/12/2015

(54) Title of the invention : SOL GEL KIT FOR MANUFACTURING A BIOCHIP AND METHOD FOR MANUFACTURING A BIOCHIP BY USING SAME

(51) International classification	:G01N33/48,G01N33/58,G01N33/52	(71)**Name of Applicant :** **1)PCL INC.** Address of Applicant :Room 83421 Research Complex 2 Sungkyunkwan Univresity Cheoncheon dong Jangan gu Suwon si Gyeonggi do 440 746 Republic of Korea (72)**Name of Inventor :** **1)JO Minjoung** **2)LEE Seram**
(31) Priority Document No	:NA	
(32) Priority Date	:NA	
(33) Name of priority country	:NA	
(86) International Application No Filing Date	:PCT/KR2011/003105 :27/04/2011	
(87) International Publication No	:WO 2012/148017	
(61) Patent of Addition to Application Number Filing Date	:NA :NA	
(62) Divisional to Application Number Filing Date	:NA :NA	

(57) Abstract :
The present invention relates to a sol gel kit for manufacturing a biochip and a method for manufacturing a biochip by using same and more particularly to the method for manufacturing a biochip wherein by mixing a mixed material of certain silicate monomers such as SolB1 SolB2 and SolB3 SolBH SolBS and distilled water and a mixed material of detector biologics sequentially the gelation time of sol compositions is delayed leading to stabilized gelation and by using an arrayer or an instrument such as a pipette etc. when dispensing a sol mixed material for hand dispensing etc. the biochip can be manufactured conveniently. On the other hand by dispensing the sol compositions SolBH solution and a buffer solution SolBS distilled water and a mixed material solution of detector proteins sequentially on a board without a typical pre processing procedure such as mixing the homogenizing biochip is manufactured.

No. of Pages : 61 No. of Claims : 29

(12) PATENT APPLICATION PUBLICATION
(21) Application No.8618/CHENP/2013 A
(19) INDIA
(22) Date of filing of Application :25/10/2013
(43) Publication Date : 25/12/2015

(54) Title of the invention : PEPTIDES HAVING CYTOTOXIC T CELL INDUCIBILITY

(51) International classification :C07K
(31) Priority Document No :60/703,265
(32) Priority Date :27/07/2005
(33) Name of priority country :U.S.A.
(86) International Application No :PCT/JP2006/314947
Filing Date :21/07/2006
(87) International Publication No : NA
(61) Patent of Addition to Application Number :NA
Filing Date :NA
(62) Divisional to Application Number :954/CHENP/2008
Filed on :21/07/2006

(71)**Name of Applicant :**
1)ONCO THERAPY SCIENCE, INC.
Address of Applicant :2-1, SAKADO 3-CHOME, TAKATSU-KU, KAWASAKI-SHI, KANAGAWA 213-0012 Japan
(72)**Name of Inventor :**
1)NAKAMURA, YUSUKE
2)FURUKAWA, YOICHI
3)TAHARA, HIDEAKI
4)TSUNODA, TAKUYA
5)MATSUSHIMA, SATOSHI

(57) Abstract :
The present invention relates to a peptide of less than 15 amino acids having cytotoxic T cell inducibility, wherein the peptide comprises the amino acid sequence of SEQ ID NO: 7 in which 1 or 2 amino acids are substituted or added.

No. of Pages : 109 No. of Claims : 4

(12) PATENT APPLICATION PUBLICATION
(19) INDIA
(22) Date of filing of Application :10/01/2013
(21) Application No.137/CHE/2013 A
(43) Publication Date : 25/12/2015

(54) Title of the invention : PROCESS FOR EXPRESSION OF RECOMBINANT PROTEINS IN PICHIA PASTORIS USING A FED BATCH MODEL

(51) International classification	:C07K14/00
(31) Priority Document No	:NA
(32) Priority Date	:NA
(33) Name of priority country	:NA
(86) International Application No	:NA
Filing Date	:NA
(87) International Publication No	: NA
(61) Patent of Addition to Application Number	:NA
Filing Date	:NA
(62) Divisional to Application Number	:NA
Filing Date	:NA

(71)**Name of Applicant :**
1)BIOCON LIMITED
Address of Applicant :20th KM, Hosur Road, Electronics City, P.O., Bangalore 560 100, Karnataka, India Karnataka India
(72)**Name of Inventor :**
1)SANJAY TIWARI
2)GOURAV AWASTHI
3)GOKUL JOTHIRAMAN
4)ARUN CHANDAVARKAR

(57) Abstract :
The present disclosure relates to a comprehensive model for expression of recombinant peptides by Pichia pastoris. The model uses an easily controllable variable called ˜critical nutrient ratio™ for obtaining a right balance between product synthesis and it™s degradation during the fermentation process. The extra cellular concentration of precursor could be increased by about 10 folds and the degradation constants could be reduced by about 10 20 folds for intracellular and extracellular cases respectively by controlling critical nutrient ratio and addition of soya flour hydrolysate and EDTA.

No. of Pages : 24 No. of Claims : 13

(12) PATENT APPLICATION PUBLICATION
(21) Application No.1760/CHE/2014 A
(19) INDIA
(22) Date of filing of Application :01/04/2014
(43) Publication Date : 25/12/2015

(54) Title of the invention : PACKAGING FOR PHARMACEUTICALS INCLUDING CONTRACEPTIVES

(51) International classification	:B29C	(71)**Name of Applicant :**
(31) Priority Document No	:NA	**1)The Challenge Printing Co.**
(32) Priority Date	:NA	Address of Applicant :of 2 Bridewell Place, Clifton, New Jersey 07014, USA U.S.A.
(33) Name of priority country	:NA	
(86) International Application No	:NA	(72)**Name of Inventor :**
Filing Date	:NA	**1)JALINDRE, Swaraj Sunil**
(87) International Publication No	: NA	
(61) Patent of Addition to Application Number	:NA	
Filing Date	:NA	
(62) Divisional to Application Number	:NA	
Filing Date	:NA	

(57) Abstract :
A package for pharmaceuticals such as contraceptives has a mold having a plurality of indentations arranged in a predetermined manner. The indentations are arranged in four circular patterns, each pattern being located in one of four quadrants defined by internal perforated boundaries. A lidding cover is adhered to the mold. The lidding cover has printed material that identifies the locations of the indentations and the internal perforated boundaries of the four quadrants.

No. of Pages : 15 No. of Claims : 7

(12) PATENT APPLICATION PUBLICATION
(19) INDIA
(22) Date of filing of Application :01/04/2014
(21) Application No.1761/CHE/2014 A
(43) Publication Date : 25/12/2015

(54) Title of the invention : A METHOD FOR PROCESSING OF X-RAY BAGGAGE SCAN IMAGES

(51) International classification :G01V 5/00
(31) Priority Document No :NA
(32) Priority Date :NA
(33) Name of priority country :NA
(86) International Application No :NA
Filing Date :NA
(87) International Publication No : NA
(61) Patent of Addition to Application Number :NA
Filing Date :NA
(62) Divisional to Application Number :NA
Filing Date :NA

(71)**Name of Applicant :**
1)M/S. BHARAT ELECTRONIC LIMITED
Address of Applicant :NAGAVARA, OUTER RING ROAD, BANGALORE - 560 045 Karnataka India
(72)**Name of Inventor :**
1)INDU SOLOMON
2)DR. CHAVELI RAMESH
3)MALLIKHARJUNA RAO PALADUGU
4)SIDDHARTH B. PATTEBAHADUR
5)MUKUND CHITALE

(57) Abstract :
NA

No. of Pages : 22 No. of Claims : 9

(12) PATENT APPLICATION PUBLICATION
(21) Application No.3964/CHE/2013 A
(19) INDIA
(22) Date of filing of Application :04/09/2013
(43) Publication Date : 25/12/2015

(54) Title of the invention : INKJET INK, INK CARTRIDGE, INKJET RECORDING DEVICE, AND INKJET PRINTED MATTER

(51) International classification	:G06F
(31) Priority Document No	:2012-198956
(32) Priority Date	:10/09/2012
(33) Name of priority country	:Japan
(86) International Application No	:NA
Filing Date	:NA
(87) International Publication No	: NA
(61) Patent of Addition to Application Number	:NA
Filing Date	:NA
(62) Divisional to Application Number	:NA
Filing Date	:NA

(71)**Name of Applicant :**
1)RICOH COMPANY, LTD.
Address of Applicant :3-6, NAKAMAGOME 1-CHOME, OHTA-KU, TOKYO, 143-8555 Japan
(72)**Name of Inventor :**
1)AKIHIKO MATSUYAMA
2)MISURU NARUSE
3)MASAYASU NONOGAKI
4)MINORU HAKIRI
5)KEITA KATOH

(57) Abstract :
ABSTRACT OF THE DISCLOSURE Inkjet ink contains a pigment, a hydrosoluble solvent, and water, wherein the pigment is represented by the following chemical formula 1 and has a CuKa X-ray diffraction spectrum having a wavelength of 1.541 A such that no main peak is observed at a Bragg (20 ± 0.2 °) angle in a range of 20 of from 28.0 ° to 29.0 °, Chemical formula 1 wherein R represents a hydrogen atom, a methyl group, or a chlorine atom.

No. of Pages : 48 No. of Claims : 9

(12) PATENT APPLICATION PUBLICATION
(21) Application No.723/CHE/2014 A
(19) INDIA
(22) Date of filing of Application :17/02/2014
(43) Publication Date : 25/12/2015

(54) Title of the invention : POLYMORPHS OF LOMITAPIDE AND ITS SALTS

(51) International classification :A61K
(31) Priority Document No :NA
(32) Priority Date :NA
(33) Name of priority country :NA
(86) International Application No :NA
Filing Date :NA
(87) International Publication No : NA
(61) Patent of Addition to Application Number :NA
Filing Date :NA
(62) Divisional to Application Number :NA
Filing Date :NA

(71)**Name of Applicant :**
1)HETERO RESEARCH FOUNDATION
Address of Applicant :HETERO DRUGS LIMITED, HETERO CORPORATE, 7-2-A2, INDUSTRIAL ESTATES, SANATH NAGAR, HYDERABAD - 500 018 Andhra Pradesh India
(72)**Name of Inventor :**
1)PARTHASARADHI REDDY, BANDI
2)RATHNAKAR REDDY, KURA
3)MURALIDHARA REDDY, DASARI
4)MUKUNDA REDDY, JAMBULA
5)VAMSI KRISHNA, BANDI

(57) Abstract :
POLYMORPHS OF LOMITAPIDE AND ITS SALTS The present invention provides novel polymorphs of lomitapide, process for their preparation and pharmaceutical compositions comprising them. The present invention also provides a novel polymorph of lomitapide mesylate, process for its preparation and pharmaceutical compositions comprising it.

No. of Pages : 21 No. of Claims : 10

(12) PATENT APPLICATION PUBLICATION
(19) INDIA
(22) Date of filing of Application :03/10/2013

(21) Application No.8011/CHENP/2013 A
(43) Publication Date : 25/12/2015

(54) Title of the invention : TREATMENT AND PREVENTION OF DISEASES RELATED TO OXIDATIVE STRESS

(51) International classification :A61K31/198,A61P5/50,A61P5/00
(31) Priority Document No :61/500153
(32) Priority Date :23/06/2011
(33) Name of priority country :U.S.A.
(86) International Application No :PCT/HU2012/000055
Filing Date :25/06/2012
(87) International Publication No :WO 2012/176009
(61) Patent of Addition to Application Number :NA
Filing Date :NA
(62) Divisional to Application Number :NA
Filing Date :NA

(71)**Name of Applicant :**
1)UNIVERSITY OF P‰CS
Address of Applicant :Vasv¡ri P¡l utca 4. H 7622 Pcs Hungary
(72)**Name of Inventor :**
1)WITTMANN Istv¡n
2)MOLN • R Gergo Attila
3)CSEH Judit
4)SZIJ • RT Istv¡n Andr¡s

(57) Abstract :
The present invention relates to the field of treatment and prevention of conditions related to oxidative stress and hormone resistance. Preferably insulin resistance and erythropoietin resistance and acetyl choline resistance are in the focus. The invention also relates to the field of use of amino acids in particular p L Tyrosine and a precursor thereof as a medicament or composition or formulation in the prevention or treatment of said conditions.

Figure 1

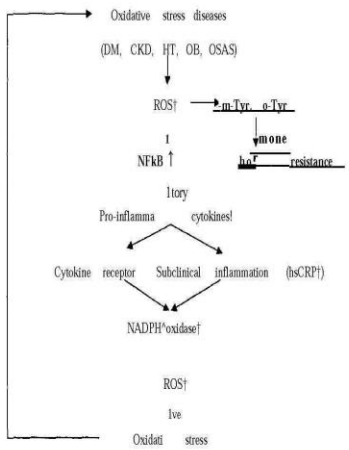

No. of Pages : 47 No. of Claims : 17

(12) PATENT APPLICATION PUBLICATION
(19) INDIA
(22) Date of filing of Application :28/10/2013
(21) Application No.8659/CHENP/2013 A
(43) Publication Date : 25/12/2015

(54) Title of the invention : ANTIBALLISTIC PANEL

(51) International classification :F41H5/04
(31) Priority Document No :11164552.9
(32) Priority Date :03/05/2011
(33) Name of priority country :EPO
(86) International Application No :PCT/EP2012/057588
Filing Date :26/04/2012
(87) International Publication No :WO 2012/150164
(61) Patent of Addition to Application Number :NA
Filing Date :NA
(62) Divisional to Application Number :NA
Filing Date :NA

(71)**Name of Applicant :**
1)TEIJIN ARAMID B.V.
Address of Applicant :Velperweg 76 NL 6824 BM Arnhem Netherlands
2)BARRDAY INC.
(72)**Name of Inventor :**
1)DE HAAS Marc Jan
2)PATEL Chinkalben

(57) Abstract :
The invention pertains to an antiballistic panel. The panel comprises at least a first stack and a second stack wherein the first stack has a plurality of first laminates made of a first kind of fibers and the second stack has a plurality of second laminates made of a second kind of fibers wherein the first kind of fibers has a tensile modulus in the range of 40 85 GPa measured according to ASTM D7269 and the second kind of fibers has a tensile modulus in the range of 86 140 GPa measured according to ASTM D7269.

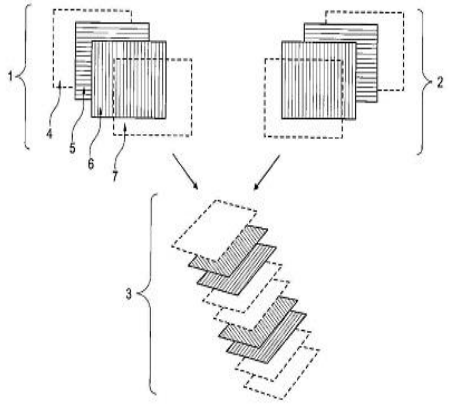

Fig. 1

No. of Pages : 23 No. of Claims : 9

(12) PATENT APPLICATION PUBLICATION
(19) INDIA
(22) Date of filing of Application :05/04/2013
(21) Application No.2653/CHENP/2013 A
(43) Publication Date : 25/12/2015

(54) Title of the invention : HYDROSTATIC LAYER WAVE ENERGY POWER GENERATING DEVICE

(51) International classification :F03B13/22
(31) Priority Document No :201010502249.4
(32) Priority Date :29/09/2010
(33) Name of priority country :China
(86) International Application No :PCT/CN2011/001397
Filing Date :22/08/2011
(87) International Publication No :WO 2012/041000
(61) Patent of Addition to Application Number :NA
Filing Date :NA
(62) Divisional to Application Number :NA
Filing Date :NA

(71)**Name of Applicant :**
1)ZHONGSHAN FANTASY MODEL DESIGN CO. LTD.
Address of Applicant :Shops Card 37 LingDongShangZhu Apartment Complex Wuguishan Town Zhongshan Guangdong 528400 China
(72)**Name of Inventor :**
1)DENG Zhi hui

(57) Abstract :
A hydrostatic layer wave energy power generating device comprises a buoy (5) that can move up down back and forth according to the movement of waves. The bottom of the buoy (5) is connected to a flow guidance and acceleration disc (2). The flow guidance and acceleration disc (2) comprises a disc body (201) that comprises an outer cylinder (2010). Inside the outer cylinder (2010) is a disc core (2011). Arranged in a circle between the outer cylinder (2010) and the disc core (2011) are multiple flow guiding panels (2012) inclined in the same direction. A water channel (202) is formed between the outer cylinder (2010) the disc core (2011) and two neighboring flow guiding panels (2012). At the water outlets (2022) of the water channels (202) is an impeller (1) that is installed on the flow guidance and acceleration disc (2) and that can rotate relative to the disc (2). Arranged in a circle on the impeller (1) are multiple blades (101). The blades (101) face the water outlets (2022) allowing water to flow out of the water outlets (2022) and impact on the blades (101) to drive the rotation of the impeller (1). On the flow guidance and acceleration disc (2) is a containment space (208) in which is a generator (4) whose rotor is driven by the impeller (1).

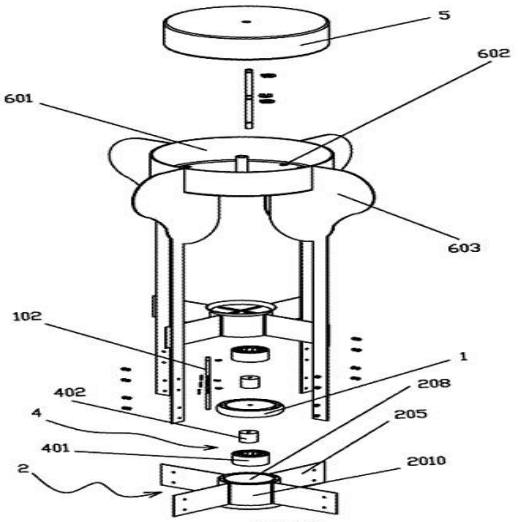

FIG. 3

No. of Pages : 33 No. of Claims : 11

(12) PATENT APPLICATION PUBLICATION
(19) INDIA
(22) Date of filing of Application :29/10/2012
(21) Application No.9214/CHENP/2012 A
(43) Publication Date : 25/12/2015

(54) Title of the invention : PYRAZOLE COMPOUNDS AS JAK INHIBITORS

(51) International classification :C07D487/04,A61K31/519,A61P35/00
(31) Priority Document No :10161632.4
(32) Priority Date :30/04/2010
(33) Name of priority country :EPO
(86) International Application No :PCT/EP2011/056158
Filing Date :18/04/2011
(87) International Publication No :WO 2011/134831
(61) Patent of Addition to Application Number :NA
Filing Date :NA
(62) Divisional to Application Number :NA
Filing Date :NA

(71)**Name of Applicant :**
1)CELLZOME LIMITED
Address of Applicant :Chesterford Research Park Little Chesterford Cambridge CB10 1XL U.K.
(72)**Name of Inventor :**
1)HARRISON Richard John
2)OXENFORD Sally
3)HOBSON Andrew
4)RAMSDEN Nigel
5)MILLER Warren

(57) Abstract :
The present invention relates to compounds of formula (I) wherein R R R R have the meaning as cited in the description and the claims. Said compounds are useful as JAK inhibitors for the treatment or prophylaxis of immunological inflammatory autoimmune allergic disorders and immunologically mediated diseases. The invention also relates to pharmaceutical compositions including said compounds the preparation of such compounds as well as the use as medicaments.

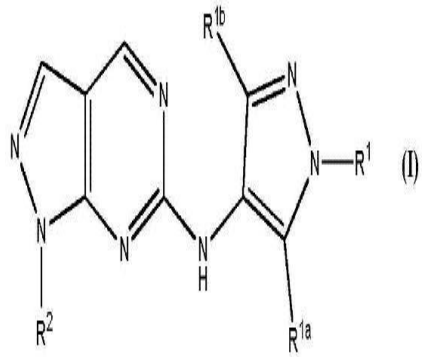

(I)

No. of Pages : 79 No. of Claims : 17

(12) PATENT APPLICATION PUBLICATION
(19) INDIA
(22) Date of filing of Application :29/10/2012
(21) Application No.9217/CHENP/2012 A
(43) Publication Date : 25/12/2015

(54) Title of the invention : DEVICE AND METHOD FOR STORAGE AND TRANSFER OF THERMAL ENERGY

(51) International classification :F24J2/07,F24J2/34,F24H7/02
(31) Priority Document No :RM2010A000203
(32) Priority Date :29/04/2010
(33) Name of priority country :Italy
(86) International Application No :PCT/IB2011/051769
Filing Date :22/04/2011
(87) International Publication No :WO 2011/135501
(61) Patent of Addition to Application Number :NA
Filing Date :NA
(62) Divisional to Application Number :NA
Filing Date :NA

(71)**Name of Applicant :**
1)MAGALDI INDUSTRIE S.R.L.
Address of Applicant :Via Irno 219 84135 Salerno (SA) Italy
(72)**Name of Inventor :**
1)MAGALDI Mario
2)DE MICHELE Gennaro

(57) Abstract :
A device (1) for storage and conveyance of thermal energy for an energy production system which device (1) is apt to receive the solar radiation and is based on the use of a modular fluidizable granular bed and a heat exchanger associated thereto. The modular fluidization allows the selective storage of heat or thermal transfer to the exchanger. At the basis of such use there are the favorable features of thermal exchange of the fluidized beds and the effective convective conveyance of the heat subsequent to the mobility of the granular phase. Both these features are linked to the possibility of imparting a rheological behavior to a granular solid that is comparable to that of a fluid actually thanks to the fluidization thereof. Such device mainly comprises: a containment casing (2) provided with one or more cavities receiving the solar radiation (20); a fluidizable bed of granular particles (3) suitable for thermal energy storage and conveyance arranged inside the containment casing (2); one feed inlet for feeding a fluidization gas through the bed (3) of particles by a suitable distributor (21); a heat exchanger (4) immersed in the fluidizable granular bed and crossed by a working fluid; and a feeding inlet for a fuel gas (401) as additional thermal input to increase the system management flexibility.

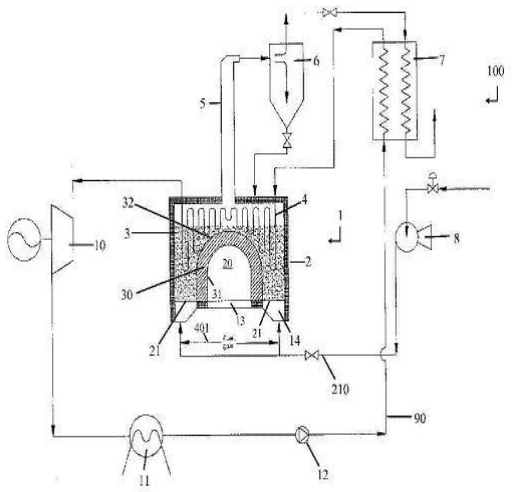

FIG 1

No. of Pages : 24 No. of Claims : 32

(12) PATENT APPLICATION PUBLICATION
(19) INDIA
(22) Date of filing of Application :23/09/2013

(21) Application No.7687/CHENP/2013 A
(43) Publication Date : 25/12/2015

(54) Title of the invention : VISUALIZATION FOR NAVIGATION GUIDANCE

(51) International classification :A61B6/00
(31) Priority Document No :11305225.2
(32) Priority Date :02/03/2011
(33) Name of priority country :EPO
(86) International Application No :PCT/IB2012/050966
Filing Date :01/03/2012
(87) International Publication No :WO 2012/117366
(61) Patent of Addition to Application Number :NA
Filing Date :NA
(62) Divisional to Application Number :NA
Filing Date :NA

(71)**Name of Applicant :**
1)KONINKLIJKE PHILIPS N.V.
Address of Applicant :High Tech Campus 5 NL 5656 AE Eindhoven Netherlands
2)KINGS COLLEGE LONDON
3)PHILIPS INTELLECTUAL PROPERTY & STANDARDS GMBH
(72)**Name of Inventor :**
1)MANZKE Robert
2)ETYNGIER Patrick
3)CATHIER Pascal Yves Fran§ois
4)VILLAIN Nicolas Fran§ois
5)RASCHE Volker
6)RHODE Kawaldeep Singh

(57) Abstract :
The present invention relates to visualizing information of an object. In order to provide spatial information and in addition situation specific data to the user while ensuring an effective perceptibility a method (110) is provided comprising the steps of: a) providing (112) pre navigation data (114) of a region of interest of an object (22); wherein the pre navigation data comprises spatial geometrical data (116) and a functional parameter surface (118) in correspondence to the spatial geometrical data; b) acquiring (120) live image data (122) of the region of interest; c) detecting (124) an element (126) in the live image data; d) determining (128) spatial relation (130) of the pre navigation data and the live image data; e) determining (132)the position (134) of the detected element in the spatial geometrical data which determining is based on the spatial relation and computing (136) a predetermined related point of location (138) on the functional parameter surface; f) generating (140) a combination (142) of a simplified surface representation (144) of the region of interest which simplified surface representation is based on a visualization of the functional parameter surface and a marker (146) indicating the computed predetermined related point of location; and g) displaying (148) the combination as navigation guidance (150).

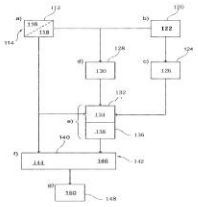
Fig. 2

No. of Pages : 33 No. of Claims : 15

(12) PATENT APPLICATION PUBLICATION
(21) Application No.9236/CHENP/2012 A
(19) INDIA
(22) Date of filing of Application :30/10/2012
(43) Publication Date : 25/12/2015

(54) Title of the invention : ECT2 PEPTIDES AND VACCINES INCLUDING THE SAME

(51) International classification :C12N15/09
(31) Priority Document No :61/320577
(32) Priority Date :02/04/2010
(33) Name of priority country :U.S.A.
(86) International Application No :PCT/JP2011/001909
Filing Date :30/03/2011
(87) International Publication No :WO 2011/122022
(61) Patent of Addition to Application Number :NA
Filing Date :NA
(62) Divisional to Application Number :NA
Filing Date :NA

(71)**Name of Applicant :**
1)ONCOTHERAPY SCIENCE INC.
Address of Applicant :2 1 Sakado 3 chome Takatsu ku Kawasaki shi Kanagawa 2130012 Japan
(72)**Name of Inventor :**
1)NAKAMURA Yusuke
2)TSUNODA Takuya
3)OHSAWA Ryuji
4)YOSHIMURA Sachiko
5)WATANABE Tomohisa

(57) Abstract :
Isolated peptides derived from SEQ ID NO: 42 and fragments thereof that bind to an HLA antigen and induce cytotoxic T lymphocytes (CTL) and thus are suitable for use in the context of cancer immunotherapy more particularly cancer vaccines are described herein. The inventive peptides encompass both the afore mentioned amino acid sequences and modified versions thereof in which one two or several amino acids are substituted deleted inserted or added provided such modified versions retain the requisite HLA binding and/or CTL inducibility of the original sequences. Further provided are nucleic acids encoding any of the aforementioned peptides as well as pharmaceutical agents substances and/or compositions that include or incorporate any of the aforementioned peptides or nucleic acids. The peptides nucleic acids pharmaceutical agents substances and compositions of this invention find particular utility in the treatment of cancers and tumors including for example bladder cancer breast cancer cervical cancer cholangiocellular carcinoma CML colorectal cancer esophageal cancer NSCLC lymphoma pancreatic cancer prostate cancer renal carcinoma and SCLC.

No. of Pages : 84 No. of Claims : 22

(12) PATENT APPLICATION PUBLICATION
(19) INDIA
(22) Date of filing of Application :30/10/2012
(21) Application No.9237/CHENP/2012 A
(43) Publication Date : 25/12/2015

(54) Title of the invention : PROPYLENE POLYMER COMPOSITIONS

(51) International classification :C08L23/14,C08F297/08
(31) Priority Document No :10162007.8
(32) Priority Date :05/05/2010
(33) Name of priority country :EPO
(86) International Application No :PCT/EP2011/055341
Filing Date :06/04/2011
(87) International Publication No :WO 2011/138111
(61) Patent of Addition to Application Number :NA
Filing Date :NA
(62) Divisional to Application Number :NA
Filing Date :NA

(71)**Name of Applicant :**
1)BASELL POLIOLEFINE ITALIA SRL
Address of Applicant :Via Pergolesi 25 I 20124 Milano Italy
(72)**Name of Inventor :**
1)CIARAFONI Marco
2)MASSARI Paola
3)CAVALIERI Claudio
4)CAPUTO Tiziana

(57) Abstract :
A propylene polymer composition comprising (percent by weight): A) 65% 85% of a propylene copolymer containing from 2.0% to 5.0% of ethylene derived units having MFR L (Melt Flow Rate according to ASTM 1238 condition L i.e. 230°C and 2.16 kg load) from 0.5 to 50 g/10 min and a melting temperature Tm ranging from 146°C to 155°C; B) 15% 35% of a copolymer of ethylene and propylene with from 74% to 87% of ethylene derived units; the composition having the intrinsic viscosity of the fraction soluble in xylene ranging from 0.8 to 1.2 dl/g preferably from 0.9 to 1.1 dl/g.

No. of Pages : 16 No. of Claims : 8

(12) PATENT APPLICATION PUBLICATION
(21) Application No.4269/CHE/2013 A
(19) INDIA
(22) Date of filing of Application :23/09/2013
(43) Publication Date : 25/12/2015

(54) Title of the invention : DOLL FOOT OPERATED TAP

(51) International classification :A63H
(31) Priority Document No :NA
(32) Priority Date :NA
(33) Name of priority country :NA
(86) International Application No :NA
Filing Date :NA
(87) International Publication No : NA
(61) Patent of Addition to Application Number :NA
Filing Date :NA
(62) Divisional to Application Number :NA
Filing Date :NA

(71)**Name of Applicant :**
1)D. THULASI RAMAN
Address of Applicant :NO. 21/A, CHINNA THAMBI STREET, VYASAR PODI, CHENNAI - 600 039 Tamil Nadu India
(72)**Name of Inventor :**
1)D. THULASI RAMAN

(57) Abstract :
ABSTRACT A new Doll foot operated faucet system for permitting operation of the faucet by a user using their feet. The inventive device includes a foot operated faucet system and coupled with Doll top and bottom. The innovated water tap, which comprises a housing of doll in outer side and inside is made up of plastic outer cap mounted on its for good appearance and the plastic (PPR) will make the product for low cost manufacturing. Therein a, valve block has a O ring shape body 4 and a piston rod 7 connected to the round seal. When the piston rod 7 is stepped upon by foot the spring 3 compressed and round seal 4 is get opened for water out let. Valve block has a O ring shape thereon, and a lower circular groove like O ring-shaped and water seal mounted thereon. When the control piston pushed down, water flow is permitted to pass through

No. of Pages : 13 No. of Claims : 11

(12) PATENT APPLICATION PUBLICATION
(21) Application No.572/CHE/2014 A
(19) INDIA
(22) Date of filing of Application :07/02/2014
(43) Publication Date : 25/12/2015

(54) Title of the invention : PROCESS FOR THE PREPARATION OF FLUTICASONE PROPIONATE

(51) International classification :C07D
(31) Priority Document No :NA
(32) Priority Date :NA
(33) Name of priority country :NA
(86) International Application No :NA
Filing Date :NA
(87) International Publication No : NA
(61) Patent of Addition to Application Number :NA
Filing Date :NA
(62) Divisional to Application Number :NA
Filing Date :NA

(71)**Name of Applicant :**
1)MYLAN LABORATORIES LTD
Address of Applicant :PLOT NO 564/A/22, ROAD NO 92, JUBILEE HILLS, HYDERABAD - 500 033 Andhra Pradesh India
(72)**Name of Inventor :**
1)JADHAV, SAKHARAM
2)BOHARA, CHANDERSINGH
3)WAGH, GHANSHYAM
4)GORE, VINAYAK GOVIND
5)GADAKAR, MAHESHKUMAR

(57) Abstract :
PROCESS FOR THE PREPARATION OF FLUTICASONE PROPIONATE The present disclosure relates to an improved process for the preparation of fluticasone propionate.

No. of Pages : 8 No. of Claims : 4

(12) PATENT APPLICATION PUBLICATION
(19) INDIA
(22) Date of filing of Application :30/10/2012
(21) Application No.9233/CHENP/2012 A
(43) Publication Date : 25/12/2015

(54) Title of the invention : IMAGE PROCESSING APPARATUS AND CONTROL METHOD FOR IMAGE PROCESSING APPARATUS

(51) International classification :H04N9/07,G06T5/00,G06T5/20
(31) Priority Document No :2010109548
(32) Priority Date :11/05/2010
(33) Name of priority country :Japan
(86) International Application No :PCT/JP2011/002551
Filing Date :06/05/2011
(87) International Publication No :WO 2011/142105
(61) Patent of Addition to Application Number :NA
Filing Date :NA
(62) Divisional to Application Number :NA
Filing Date :NA

(71)**Name of Applicant :**
1)CANON KABUSHIKI KAISHA
Address of Applicant :30 2 Shimomaruko 3 chome Ohta ku Tokyo 1468501 Japan
(72)**Name of Inventor :**
1)KAWAGUCHI Zenya
2)HARA Takayuki
3)KUNIEDA Shutaro

(57) Abstract :
An image processing apparatus can execute appropriate image processing while preventing increase in a capacity of a memory for storing a plurality of pieces of image data of different frequency bands. The image processing apparatus stores first image data having the highest frequency among the plurality of pieces of image data of different frequency bands in a state in which each pixel of the first image data includes a color component signal of any of a plurality of colors on the memory and further stores second image data and third image data whose frequency bands are lower than that of the first image data on the memory in a state in which a part of or all pixels of the second and the third image data have color component signals of a plurality of colors.

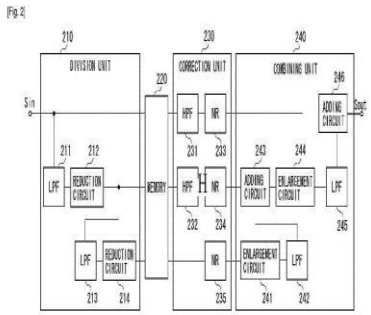

No. of Pages : 24 No. of Claims : 9

(12) PATENT APPLICATION PUBLICATION
(21) Application No.9234/CHENP/2012 A
(19) INDIA
(22) Date of filing of Application :30/10/2012
(43) Publication Date : 25/12/2015

(54) Title of the invention : COMMUNICATION LINE SWITCHING METHOD COMMUNICATION APPARATUS STATION SIDE COMMUNICATION APPARATUS COMMUNICATION SYSTEM AND CONTROL DEVICE

(51) International classification	:H04L12/44,H04B10/02,H04B10/20
(31) Priority Document No	:NA
(32) Priority Date	:NA
(33) Name of priority country	:NA
(86) International Application No	:PCT/JP2010/006863
Filing Date	:25/11/2010
(87) International Publication No	:WO 2012/070089 A1
(61) Patent of Addition to Application Number	:NA
Filing Date	:NA
(62) Divisional to Application Number	:NA
Filing Date	:NA

(71)**Name of Applicant :**
1)MITSUBISHI ELECTRIC CORPORATION
Address of Applicant :7 3 Marunouchi 2 chome Chiyoda ku Tokyo 1008310 Japan
(72)**Name of Inventor :**
1)MUKAI Hiroaki

(57) Abstract :
In a communication system in which a station-side line terminal apparatus 1 and a user-side line terminal apparatus 10 perform communication via a plurality of redundant physical lines, the user-side line terminal apparatus 10 monitors an out-of-synchronization error and line abnormality of the physical lines and, when line abnormality is detected (P4), shifts from a registered state to a holdover state for deferring discarding of setting information such as link information. The user-side line terminal apparatus 10 suppresses detection of the out-of-synchronization error during a deferred period to prevent a communication link from being disconnected by the out-of-synchronization error and prevent initial-setting from being required. The station-side line terminal apparatus 1 switches a line during the deferred period (P7) and, after transmitting a synchronization signal (P8) to synchronize with the user-side line terminal apparatus, resumes normal communication.

No. of Pages : 63 No. of Claims : 20

(12) PATENT APPLICATION PUBLICATION
(19) INDIA
(22) Date of filing of Application :30/10/2012
(21) Application No.9235/CHENP/2012 A
(43) Publication Date : 25/12/2015

(54) Title of the invention : METHOD OF PROVIDING ACKNOWLEDGEMENT FEEDBACK FOR AGGREGATED CARRIERS USING CHANNEL SELECTION AND QPSK SYMBOL MAPPING

(51) International classification :H04L1/18,H04L5/00
(31) Priority Document No :61/330670
(32) Priority Date :03/05/2010
(33) Name of priority country :U.S.A.
(86) International Application No :PCT/US2011/034876
Filing Date :03/05/2011
(87) International Publication No :WO 2011/140002
(61) Patent of Addition to Application Number :NA
Filing Date :NA
(62) Divisional to Application Number :NA
Filing Date :NA

(71)**Name of Applicant :**
1)ALCATEL LUCENT
Address of Applicant :3 Avenue Octave Greard F 75007 Paris France
(72)**Name of Inventor :**
1)LEE Jung A.
2)BAKER Matthew P. J.
3)CHENG Fang Chen

(57) Abstract :
The present invention provides a method and apparatus for providing acknowledgment feedback for aggregated downlink component carriers. One embodiment of the method includes determining acknowledgment bits for downlink component carriers that are aggregated to a particular user equipment. Each acknowledgment bit indicates whether a corresponding downlink component carrier was successfully received. This embodiment also includes transmitting symbol constellations representative of the acknowledgment bits in resources of one or more uplink control channels of the uplink component carrier.

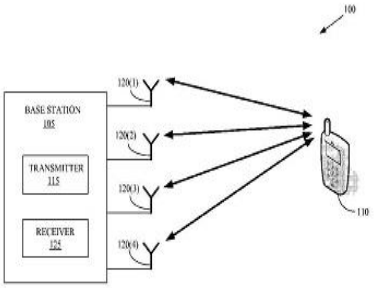

Figure 1

No. of Pages : 22 No. of Claims : 11

(12) PATENT APPLICATION PUBLICATION
(21) Application No.7690/CHENP/2013 A
(19) INDIA
(22) Date of filing of Application :23/09/2013
(43) Publication Date : 25/12/2015

(54) Title of the invention : A METHOD AND DEVICE FOR POSITIONING A DOPPLER ULTRASOUND TRANSDUCER FOR BLOOD FLOW MEASUREMENT AND A SYSTEM FOR BLOOD FLOW MEASUREMENT

(51) International classification :A61B5/022,A61B8/06,A61B8/08
(31) Priority Document No :PCT/CN2011/071423
(32) Priority Date :01/03/2011
(33) Name of priority country :China
(86) International Application No :PCT/IB2012/050897
Filing Date :27/02/2012
(87) International Publication No :WO 2012/117337
(61) Patent of Addition to Application Number :NA
Filing Date :NA
(62) Divisional to Application Number :NA
Filing Date :NA

(71)**Name of Applicant :**
1)KONINKLIJKE PHILIPS N.V.
Address of Applicant :High Tech Campus 5 NL 5656 AE Eindhoven Netherlands
(72)**Name of Inventor :**
1)YAN Ming
2)CHEN Yinan

(57) Abstract :
The method of positioning a Doppler ultrasound transducer for performing blood flow measurement according to the invention comprises the steps of: detecting a pressure oscillation signal from an inflated cuff placed on patient s artery; detecting an ultrasound pulse signal from the Doppler ultrasound transducer placed along the artery; deriving a first signal from the pressure oscillation signal and the ultrasound pulse signal the first signal indicating the degree of synchronization between the pressure oscillation signal and the ultrasound pulse signal; and outputting an indication signal to indicate the Doppler ultrasound transducer is in a desired position when the first signal satisfies a predefined condition. Since the synchronization property of the cuff pressure oscillation signal and the ultrasound signal caused by the blood flow is utilized to determine whether the transducer is well positioned or not ultrasound signal which is a pulse signal but not reflecting the blood flow of the artery could be determined as not in synchronization with the oscillation signal and therefore the accuracy of the positioning could be improved.

No. of Pages : 21 No. of Claims : 15

(12) PATENT APPLICATION PUBLICATION
(21) Application No.9247/CHENP/2012 A
(19) INDIA
(22) Date of filing of Application :30/10/2012
(43) Publication Date : 25/12/2015

(54) Title of the invention : AQUEOUS SOLUTION OF POLY(METH)ACRYLIC ACID POLYMER AND METHOD FOR PRODUCING SAME

(51) International classification :C08L33/02,C08F8/00,C08J3/20
(31) Priority Document No :2010-088695
(32) Priority Date :07/04/2010
(33) Name of priority country :Japan
(86) International Application No :PCT/JP2011/058740
Filing Date :06/04/2011
(87) International Publication No :WO 2011/126059 A1
(61) Patent of Addition to Application Number :NA
Filing Date :NA
(62) Divisional to Application Number :NA
Filing Date :NA

(71)**Name of Applicant :**
1)NIPPON SHOKUBAI CO. LTD.
Address of Applicant :1 1 Koraibashi 4 chome Chuo ku Osaka shi Osaka 5410043 Japan
(72)**Name of Inventor :**
1)WAKAO Norihiro
2)CHOSA Junichi
3)KANZAKI Akihiko

(57) Abstract :
Disclosed is a polymer (aqueous solution) exhibiting superior dispersibility and the like for inorganic matter and sufficient dispersibility over time as well as good color tone over time and a method for easily producing such polymers (aqueous solutions). Also disclosed is an inorganic particle slurry capable of maintaining a high pH that exhibits a high inorganic particle concentration and good viscosity and has sufficient viscosity stability over time with a little coloration during drying and a method for easily producing that inorganic particle slurry. Specifically disclosed is an aqueous solution or inorganic particle slurry that contains a poly(meth)acrylic acid polymer having a specific structure and a specific inorganic anion concentration that contains sulfur atoms or phosphorus atoms.

No. of Pages : 101 No. of Claims : 7

(12) PATENT APPLICATION PUBLICATION
(19) INDIA
(22) Date of filing of Application :30/10/2012
(21) Application No.9249/CHENP/2012 A
(43) Publication Date : 25/12/2015

(54) Title of the invention : CDCA5 PEPTIDES AND VACCINES INCLUDING THE SAME

(51) International classification :C07K7/06,C12N5/0781,C12N5/0783
(31) Priority Document No :61/322676
(32) Priority Date :09/04/2010
(33) Name of priority country :U.S.A.
(86) International Application No :PCT/JP2011/002078
Filing Date :07/04/2011
(87) International Publication No :WO 2011/125334
(61) Patent of Addition to Application Number :NA
Filing Date :NA
(62) Divisional to Application Number :NA
Filing Date :NA

(71)**Name of Applicant :**
1)ONCOTHERAPY SCIENCE INC.
Address of Applicant :2 1 Sakado 3 chome Takatsu ku Kawasaki shi Kanagawa 2130012 Japan
(72)**Name of Inventor :**
1)NAKAMURA Yusuke
2)TSUNODA Takuya
3)OHSAWA Ryuji
4)YOSHIMURA Sachiko
5)WATANABE Tomohisa

(57) Abstract :
Isolated peptides derived from SEQ ID NO: 21 and fragments thereof that bind to an HLA antigen and induce cytotoxic T lymphocytes (CTL) and thus are suitable for use in the context of cancer immunotherapy more particularly cancer vaccines are described herein. The inventive peptides encompass both the above mentioned amino acid sequences and modified versions thereof in which one two or several amino acids are substituted deleted inserted or added provided such modified versions retain the requisite HLA binding and/or CTL inducibility of the original sequences. Further provided are nucleic acids encoding any of the aforementioned peptides as well as pharmaceutical agents substances and/or compositions that include or incorporate any of the aforementioned peptides or nucleic acids. The peptides nucleic acids pharmaceutical agents substances and compositions of this invention find particular utility in the treatment of cancers and tumors including for example AML bladder cancer breast cancer cervical cancer cholangiocellular carcinoma CML colorectal cancer esophagus cancer gastric cancer gastric diffuse type cancer lung cancer lymphoma prostate cancer SCLC and soft tissue tumor.

No. of Pages : 76 No. of Claims : 23

(12) PATENT APPLICATION PUBLICATION
(19) INDIA
(22) Date of filing of Application :30/01/2014
(21) Application No.753/CHENP/2014 A
(43) Publication Date : 25/12/2015

(54) Title of the invention : LOW VIBRATION FLOATING METAL BEARING

(51) International classification :F16H
(31) Priority Document No :NA
(32) Priority Date :NA
(33) Name of priority country :NA
(86) International Application No :PCT/JP2013/070764
Filing Date :31/07/2013
(87) International Publication No : NA
(61) Patent of Addition to Application Number :NA
Filing Date :NA
(62) Divisional to Application Number :NA
Filing Date :NA

(71)**Name of Applicant :**
1)NAKAMURA INDUSTRIAL MFG. CO., LTD
Address of Applicant :860 KAMIZAKAI, NASUKARASUYAMA-SHI, TOCHIGI 321-0617 Japan
(72)**Name of Inventor :**
1)NAKAMURA, SHOTARO

(57) Abstract :
The present invention provides floating metal bearing techniques to deliver a high centering effect and prevent occurrence of noise by a vibration suppression effect resulting from the centering effect, from a low to a high rotational speed range. In the floating metal bearing, inner surface machining is applied to the surface of a bearing hole such that a plurality of regions with different fluid lubrication conditions (one region that a narrow and a wide flow path shift each other by changing the amount of clearance between the surface of a shaft and the inner surface of the bearing hole) is provided in an isogonal and isotropic manner with respect to an axial center, to obtain a high centering effect in the low rotational speed range and suppress a friction resistance increase in the high rotational speed range. This causes a high centering effect and a noise reduction effect.

No. of Pages : 25 No. of Claims : 2

(12) PATENT APPLICATION PUBLICATION
(19) INDIA
(22) Date of filing of Application :19/02/2014
(21) Application No.793/CHE/2014 A
(43) Publication Date : 25/12/2015

(54) Title of the invention : NETTLE POLYMER HYBRID COMPOSITE

(51) International classification	:c08F	(71)**Name of Applicant :**
(31) Priority Document No	:NA	**1)PSG College of Technology**
(32) Priority Date	:NA	Address of Applicant :Avinashi Road, Peelamedu,
(33) Name of priority country	:NA	Coimbatore, Tamilnadu, India. Tamil Nadu India
(86) International Application No	:NA	**2)Sabareeswaran Aruchamy**
Filing Date	:NA	**3)Mahendrakumar Nataraj**
(87) International Publication No	: NA	(72)**Name of Inventor :**
(61) Patent of Addition to Application Number	:NA	**1)Manas Ranjan Biswal**
Filing Date	:NA	**2)Sabareeswaran Aruchamy**
(62) Divisional to Application Number	:NA	**3)Mahendrakumar Nataraj**
Filing Date	:NA	**4)P.V.Mohanram**

(57) Abstract :
NETTLE POLYMER HYBRID COMPOSITE A composition for preparing a composite material is provided. The composite material for manufacturing machine tools includes (a) 20%-50% by wt. of a nettle, and (b) at least polymer. The at least one polymer is selected form (a) an epoxy, and (b) a polyester. A quantity of the nettle for preparing the composite material is 33% by wt. A quantity of the polymer for preparing the composite material ranges from 50%-80% by wt. The composite material may be reinforced with a metal to improve the stiffness of the composite material.

No. of Pages : 12 No. of Claims : 9

(12) PATENT APPLICATION PUBLICATION
(21) Application No.9268/CHENP/2012 A
(19) INDIA
(22) Date of filing of Application :31/10/2012
(43) Publication Date : 25/12/2015

(54) Title of the invention : DEVICE FOR BIAXIAL ADJUSTMENT OF AN INSTALLATION IN PARTICULAR A SOLAR PANEL UNIT

(51) International classification :F24J2/54
(31) Priority Document No :10 2010 014 087.2
(32) Priority Date :06/04/2010
(33) Name of priority country :Germany
(86) International Application No :PCT/EP2011/001700
Filing Date :06/04/2011
(87) International Publication No :WO 2011/124363 A2
(61) Patent of Addition to Application Number :NA
Filing Date :NA
(62) Divisional to Application Number :NA
Filing Date :NA

(71)**Name of Applicant :**
1)IMO HOLDING GMBH
Address of Applicant :Imostrasse 1 91350 Gremsdorf Germany
(72)**Name of Inventor :**
1)RUSS Erich
2)SEIFERT Lothar

(57) Abstract :
The invention relates to a device for biaxial adjustment of a part of an installation, in particular a solar panel unit relative to a foundation, chassis or second installation part, about two pivot axes that do not extend parallel to each other, by means of one driven or drivable pivot unit per axis, wherein each pivot unit comprises two mutually concentric rings that are mounted to each other and for mutual relative adjustment are each coupled or couplable to a respective drive, wherein one ring of each of the two pivot units is connected to a common mounting assembly, whereas the respective other ring is coupled both to the installation part to be adjusted and to a foundation, chassis or second installation part.

No. of Pages : 40 No. of Claims : 53

(12) PATENT APPLICATION PUBLICATION
(19) INDIA
(22) Date of filing of Application :31/10/2012

(21) Application No.9269/CHENP/2012 A
(43) Publication Date : 25/12/2015

(54) Title of the invention : COMPOSITIONS AND METHODS FOR THE DIAGNOSIS AND TREATMENT OF TUMOR

(51) International classification	:C07K16/28,A61P35/00,A61K39/395
(31) Priority Document No	:61/330698
(32) Priority Date	:03/05/2010
(33) Name of priority country	:U.S.A.
(86) International Application No	:PCT/US2011/034837
Filing Date	:02/05/2011
(87) International Publication No	:WO 2011/139985
(61) Patent of Addition to Application Number	:NA
Filing Date	:NA
(62) Divisional to Application Number	:NA
Filing Date	:NA

(71)**Name of Applicant :**
1)F. HOFFMANN LA ROCHE AG
Address of Applicant :Grenzacherstrasse 124 CH 4070 Basel Switzerland
(72)**Name of Inventor :**
1)BHAKTA Sunil
2)HAZEN Meredith C.
3)HONGO Jo Anne S.
4)JUNUTULA Jagath R.

(57) Abstract :
The present invention is directed to compositions of matter useful for the diagnosis and treatment of tumor in mammals and to methods of using those compositions of matter for the same.

FIGURE 1

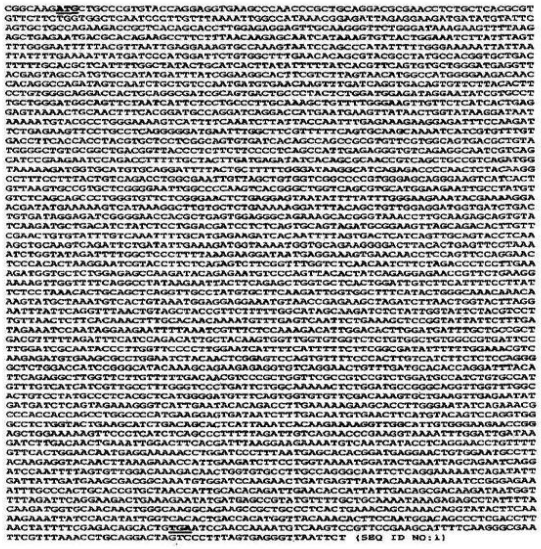

No. of Pages : 193 No. of Claims : 50

(12) PATENT APPLICATION PUBLICATION
(19) INDIA
(22) Date of filing of Application :31/10/2012
(21) Application No.9270/CHENP/2012 A
(43) Publication Date : 25/12/2015

(54) Title of the invention : PROCESS FOR RECOVERY OF ALUMINA USING TRICALCIUM ALUMINATE

(51) International classification :C01F7/00,C01F7/04,C01F7/08
(31) Priority Document No :2010901879
(32) Priority Date :03/05/2010
(33) Name of priority country :Australia
(86) International Application No :PCT/AU2011/000505
Filing Date :02/05/2011
(87) International Publication No :WO 2011/137481
(61) Patent of Addition to Application Number :NA
Filing Date :NA
(62) Divisional to Application Number :NA
Filing Date :NA

(71)**Name of Applicant :**
1)BHP BILLITON WORSLEY ALUMINA PTY LTD
Address of Applicant :PO Box 344 Collie Western Australia 6225 Australia
(72)**Name of Inventor :**
1)BOOM Eric Antoinette Jozef Marie
2)ROWORTH Daniel Mark

(57) Abstract :
A process for recovering alumina values from a caustic aluminate solution is disclosed. The process comprises the steps of: a) introducing a source of carbon dioxide to the caustic aluminate solution in the presence of aluminium hydroxide seed crystals to form a first treated stream comprising carbonate ions in solution and aluminium hydroxide in solid form; b) subjecting the first treated stream of step a) to solid/liquid separation to recover alumina values in the form of aluminium hydroxide and produce a first clarified treated stream; and c) mixing the first clarified treated stream of step b) with tricalcium aluminate to form a second treated stream comprising calcium carbonate in solid form aluminate ions in solution and hydroxyl ions in solution.

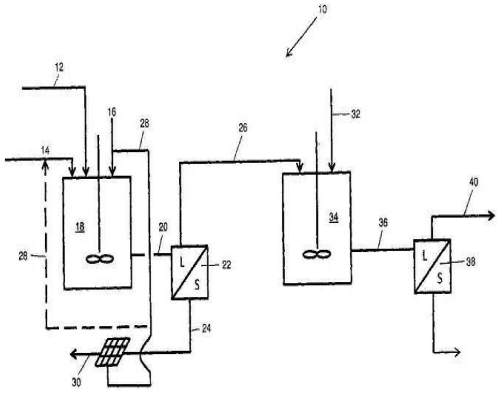

Figure 2

No. of Pages : 29 No. of Claims : 16

(12) PATENT APPLICATION PUBLICATION
(19) INDIA
(22) Date of filing of Application :01/12/2012
(21) Application No.10100/CHENP/2012 A
(43) Publication Date : 25/12/2015

(54) Title of the invention : APPARATUS AND METHOD TO CONTROL THE COLLECTION OF MEASUREMENT DATA IN A COMMUNICATION SYSTEM

(51) International classification	:H04W 8/02, H04W 36/24
(31) Priority Document No	:NA
(32) Priority Date	:NA
(33) Name of priority country	:NA
(86) International Application No	:PCT/FI2010/050365
Filing Date	:06/05/2010
(87) International Publication No	: NA
(61) Patent of Addition to Application Number	:NA
Filing Date	:NA
(62) Divisional to Application Number	:NA
Filing Date	:NA

(71)**Name of Applicant :**
1)NOKIA CORPORATION
Address of Applicant :Keilalahdentie 4 FIN-02150 Espoo Finland Finland
(72)**Name of Inventor :**
1)Tomasz Mach

(57) Abstract :
An apparatus, method and system to control the collection and reporting of measurement data in a communication system. In one embodiment, an apparatus includes a processor (520) and memory (550) including computer program code. The memory (550) and the computer program code are configured to, with the processor (520), cause the apparatus to determine a mobility state of the apparatus, and collect and store measurement data in the memory (550) depending on the mobility state. FIGURE 7

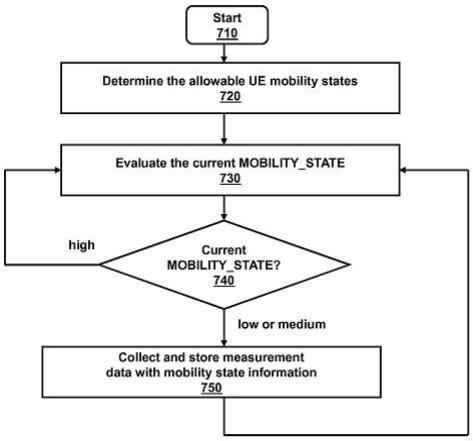

FIGURE 7

No. of Pages : 34 No. of Claims : 30

(12) PATENT APPLICATION PUBLICATION
(21) Application No.10101/CHENP/2012 A
(19) INDIA
(22) Date of filing of Application :03/12/2012
(43) Publication Date : 25/12/2015

(54) Title of the invention : SELECTING CONTENT BASED ON INTEREST TAGS THAT ARE INCLUDED IN AN INTEREST CLOUD

(51) International classification :G06Q50/00
(31) Priority Document No :12/774,548
(32) Priority Date :05/05/2010
(33) Name of priority country :U.S.A.
(86) International Application No :PCT/US2011/031708
Filing Date :08/04/2011
(87) International Publication No :WO 2011/139477
(61) Patent of Addition to Application Number :NA
Filing Date :NA
(62) Divisional to Application Number :NA
Filing Date :NA

(71)**Name of Applicant :**
1)YAHOO! INC.
Address of Applicant :701 First Avenue Sunnyvale California 94089 U.S.A.
(72)**Name of Inventor :**
1)LONG James Andrew

(57) Abstract :
Techniques are described herein for selecting content based on interest tags that are included in an interest cloud. An interest cloud is a tag cloud that includes interest tags which correspond to respective interests of a user. An interest of a user is subject matter that is deemed to have a greater importance than other subject matter to the user based on information that pertains to the user. For example an interest of a user may be derived from information in the user s emails vitality streams Web browsing history etc. In another example a user may designate subject matter as being an interest of the user. For instance if a user adds an interest tag to an interest cloud subject matter that corresponds to the interest tag is said to be an interest of the user.

No. of Pages : 42 No. of Claims : 29

(12) PATENT APPLICATION PUBLICATION
(21) Application No.1219/CHE/2014 A
(19) INDIA
(22) Date of filing of Application :10/03/2014
(43) Publication Date : 25/12/2015

(54) Title of the invention : DESALINATION OF SEA WATER USING SEMICONDUCTOR DEVICES

(51) International classification :C02F1/00
(31) Priority Document No :NA
(32) Priority Date :NA
(33) Name of priority country :NA
(86) International Application No :NA
Filing Date :NA
(87) International Publication No : NA
(61) Patent of Addition to Application Number :NA
Filing Date :NA
(62) Divisional to Application Number :NA
Filing Date :NA

(71)**Name of Applicant :**
1)EESAVYASA TECHNOLOGIES PVT. LTD.
Address of Applicant :PLOT NO: 79, PHASE-III, SVCIE, BALANAGAR, HYDERABAD, R.R. DISTRICT - 500 037 Andhra Pradesh India
(72)**Name of Inventor :**
1)D.P. CHAKRAVARTHY
2)BANDA RAVI SANKAR

(57) Abstract :
In this method of invention low temperature thermal condensation of evaporated water vapours is key principle achieved in ultra low energy consuming devices. The naturally evaporated sea water vapours when exposed to subzero lower temperature surfaces on aluminum plates, the condensated water is the source of abundant desalinated water. Achieving the sub zero temperature surfaces with nano carbon doped semi conductor devices like peltiers and other chips is the key component where no Freon gas is used for refrigeration. Continuous sea waves produce required electricity to complete the operation.

No. of Pages : 7 No. of Claims : 5

(12) PATENT APPLICATION PUBLICATION
(19) INDIA
(22) Date of filing of Application :01/04/2014
(21) Application No.1759/CHE/2014 A
(43) Publication Date : 25/12/2015

(54) Title of the invention : FLUID DISPENSER AND METHOD FOR DISPENSING FLUIDS

(51) International classification :G01F
(31) Priority Document No :13162349.8
(32) Priority Date :04/04/2013
(33) Name of priority country :EPO
(86) International Application No :NA
Filing Date :NA
(87) International Publication No : NA
(61) Patent of Addition to Application Number :NA
Filing Date :NA
(62) Divisional to Application Number :NA
Filing Date :NA

(71)**Name of Applicant :**
1)Fast & Fluid Management BV
Address of Applicant :of Hub van Doorneweg 31, NL-2171, KZ Sassenheim, The Netherlands Netherlands
(72)**Name of Inventor :**
1)POST, Johannes Hermanus Nicolaas
2)DIJKSTRA, Wouter
3)DRIESSEN, M.E.J.L.

(57) Abstract :
Fluid dispenser (1) comprising a fluid container (2) and a metering unit (4). The container comprises a fluid level sensor (8, 20, 25) and the dispenser comprises a control unit (17) configured to determine a parameter value representative for an amount of fluid in the container after refill on basis of a signal from the sensor. The sensor (8, 20, 25) can for example be configured to generate a signal at a predefined fluid level (B, C), while the control unit is configured to calculate a fluid level on basis of an input value indicative for the fluid level (A) after refill, and a dispense value indicative for amounts of fluid dispensed since the latest refill. The control unit can be configured to compare the signalled predefined fluid level (B, C) with the calculated fluid level to generate a correction factor.

No. of Pages : 21 No. of Claims : 15

(12) PATENT APPLICATION PUBLICATION
(19) INDIA
(22) Date of filing of Application :31/10/2012
(21) Application No.9273/CHENP/2012 A
(43) Publication Date : 25/12/2015

(54) Title of the invention : METHOD FOR ISOMERIZING CIS 2 PENTENE NITRILE TO FORM 3 PENTENE NITRILES

(51) International classification :C07C253/30
(31) Priority Document No :10159230.1
(32) Priority Date :07/04/2010
(33) Name of priority country :EPO
(86) International Application No :PCT/EP2011/055353
Filing Date :06/04/2011
(87) International Publication No :WO 2011/124610 A1
(61) Patent of Addition to Application Number :NA
Filing Date :NA
(62) Divisional to Application Number :NA
Filing Date :NA

(71)**Name of Applicant :**
1)BASF SE
Address of Applicant :67056 Ludwigshafen Germany
(72)**Name of Inventor :**
1)LUYKEN Hermann
2)PFAB Peter
3)BAUMANN Robert
4)LEITNER Andreas
5)AECHTNER Tobias

(57) Abstract :
A process for isomerizing cis-2-pentenenitrile to 3-pentenenitriles, by isomerizing cis-2-pentenenitrile with amidines, tertiary amines or mixtures thereof as a catalyst at temperatures of 80 to 200°C and a pressure of 0.01 to 50 bar.

No. of Pages : 14 No. of Claims : 8

(12) PATENT APPLICATION PUBLICATION
(21) Application No.9275/CHENP/2012 A
(19) INDIA
(22) Date of filing of Application :31/10/2012
(43) Publication Date : 25/12/2015

(54) Title of the invention : COMMUNICATION METHOD FOR OPTICAL COMMUNICATION SYSTEM, OPTICAL COMMUNICATION SYSTEM, SLAVE STATION APPARATUS, CONTROL DEVICE, AND COMPUTER PROGRAM

(51) International classification :H04L29/08,H04L12/44
(31) Priority Document No :NA
(32) Priority Date :NA
(33) Name of priority country :NA
(86) International Application No :PCT/JP2010/007128
Filing Date :08/12/2010
(87) International Publication No :WO 2012/077161 A1
(61) Patent of Addition to Application Number :NA
Filing Date :NA
(62) Divisional to Application Number :NA
Filing Date :NA

(71)**Name of Applicant :**
1)MITSUBISHI ELECTRIC CORPORATION
Address of Applicant :7 3 Marunouchi 2 chome Chiyoda ku Tokyo 1008310 Japan
(72)**Name of Inventor :**
1)NAKURA Kenichi
2)MUKAI Hiroaki
3)KOZAKI Seiji
4)ITO Daisuke
5)TANAKA Masaki

(57) Abstract :
This control device for a communications system relates to a control device for a communications system wherein a plurality of secondary station devices are connected to a primary station device using a common channel. The control device comprises: a power saving control unit (11d) that repeatedly performs intermittent power saving control for causing a stop or reduction for a predetermined idle period in the supply of power to a transmitter or receiver while the secondary station device maintains a communications link on the basis of a power saving authorization signal transmitted from the primary station device; and a monitoring unit (11c) that monitors for synchronization deviation by comparing a synchronization signal included in the band assignment signal and the time of the device itself. The control device switches from a registered state to a non registered state and stops the transmission signal by the transmitter when the monitoring unit (11c) has detected a synchronization deviation and suppresses a shift to the non registered state caused by detection of a synchronization deviation after a power saving control idle period.

No. of Pages : 62 No. of Claims : 15

(12) PATENT APPLICATION PUBLICATION
(19) INDIA
(22) Date of filing of Application :31/10/2012
(21) Application No.9276/CHENP/2012 A
(43) Publication Date : 25/12/2015

(54) Title of the invention : METHOD FOR INCREASING THE TEMPERATURE HOMOGENEITY IN A PIT FURNACE

(51) International classification :C21D9/70,F27B17/00,F27D7/02
(31) Priority Document No :1050443.9
(32) Priority Date :04/05/2010
(33) Name of priority country :Sweden
(86) International Application No :PCT/EP2011/002206
Filing Date :03/05/2011
(87) International Publication No :WO 2011/138014
(61) Patent of Addition to Application Number :NA
Filing Date :NA
(62) Divisional to Application Number :NA
Filing Date :NA

(71)**Name of Applicant :**
1)LINDE AKTIENGESELLSCHAFT
Address of Applicant :Klosterhofstr. 1 80331 M¼nchen Germany
(72)**Name of Inventor :**
1)EICHLER Rudiger

(57) Abstract :
Method for increasing the temperature homogeneity in a pit furnace (200; 300) in which at least one ingot (201; 301) to be heated is caused to lean against an inner wall of the pit furnace (200; 300) so that a space (205; 305) having triangular cross section is present under the ingot (201;301) between the ingot (201; 301) and said inner wall. The invention is characterised in that at least one lance (230 240; 330; 340) for an oxidant with an oxygen content of at least 85 percentages by weight is caused to be arranged in a furnace wall so that its orifice is arranged inside the furnace (200; 300) and so that oxidant can be supplied to said space (205;305).

Fig. 6

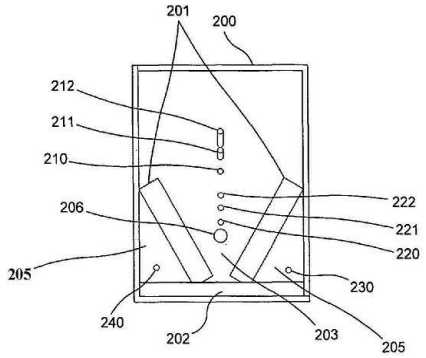

No. of Pages : 32 No. of Claims : 11

(12) PATENT APPLICATION PUBLICATION
(21) Application No.9278/CHENP/2012 A
(19) INDIA
(22) Date of filing of Application :31/10/2012
(43) Publication Date : 25/12/2015

(54) Title of the invention : APPARATUS FOR THE TANGENTIAL INTRODUCTION OF A GAS-LOADED LIQUID STREAM INTO THE TOP OF A COLUMN

(51) International classification :B01D45/12
(31) Priority Document No :102005045534.4
(32) Priority Date :23/09/2005
(33) Name of priority country :Germany
(86) International Application No :PCT/EP06/66551
Filing Date :20/09/2006
(87) International Publication No : NA
(61) Patent of Addition to Application Number :NA
Filing Date :NA
(62) Divisional to Application Number :1403/CHENP/2008
Filed on :20/09/2006

(71)**Name of Applicant :**
1)BASF SE
Address of Applicant :67056, LUDWIGSHAFEN Germany
(72)**Name of Inventor :**
1)SCHUDA, VOLKER
2)WAGNER, RUPERT

(57) Abstract :
The present invention relates to an apparatus for the tangential introduction of a gas-loaded liquid stream into the top of a column in which gas and liquid are separated. Entry into the column top proceeds through a conventional radially arranged port, to which, however, a special tube construction connects which ensures as smooth as possible non-turbulent flow and its tangential exit into the column top.

No. of Pages : 13 No. of Claims : 10

(12) PATENT APPLICATION PUBLICATION
(19) INDIA
(22) Date of filing of Application :31/10/2012
(21) Application No.9279/CHENP/2012 A
(43) Publication Date : 25/12/2015

(54) Title of the invention : METHOD FOR INCREASING THE TEMPERATURE HOMOGENEITY IN A PIT FURNACE

(51) International classification :C21D9/70,F27B17/00,F27D7/02
(31) Priority Document No :10504421
(32) Priority Date :04/05/2010
(33) Name of priority country :Sweden
(86) International Application No :PCT/EP2011/002205
Filing Date :03/05/2011
(87) International Publication No :WO 2011/138013
(61) Patent of Addition to Application Number :NA
Filing Date :NA
(62) Divisional to Application Number :NA
Filing Date :NA

(71)**Name of Applicant :**
1)LINDE AKTIENGESELLSCHAFT
Address of Applicant :Klosterhofstr. 1 80331 M¼nchen Germany
(72)**Name of Inventor :**
1)EICHLER Rudiger

(57) Abstract :
Method for increasing the temperature homogeneity in a pit furnace (200; 300) in which at least two ingots (201; 301) to be heated are caused to lean against a respective one of first and second opposite inner walls of the pit furnace (200; 300) so that the ingots (201; 301) form an elongated space (203; 303) having a V shaped cross section between them as seen along the first and second walls. The invention is characterised in that at least one separate lance (211 212 221 222; 311 312 321 322) for an oxidant with an oxygen content of at least 85 percentages by weight and at least one separate lance (210 220; 310 320) for fuel are caused to be arranged in a furnace wall with their orifices arranged opening out into the furnace (200; 300) at a distance from each other and so that oxidant and fuel respectively are caused to be suppliable to said V shaped space (203; 303) and to be combustible therein and in that the orifice of the lance (211 212 221 222; 311 312 321 322) for oxidant is caused to be arranged above the orifice of the fuel lance (210 220; 310 320) and to be directed so that the oxidant flows obliquely downwards and along the longitudinal direc¬ tion of said V shaped space (203; 303).

Fig. 4

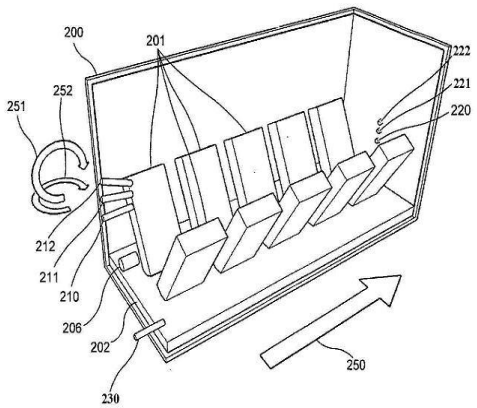

No. of Pages : 33 No. of Claims : 14

(12) PATENT APPLICATION PUBLICATION
(19) INDIA
(22) Date of filing of Application :31/10/2012

(21) Application No.9280/CHENP/2012 A
(43) Publication Date : 25/12/2015

(54) Title of the invention : SEQUESTRATION OF CARBON DIOXIDE USING TRICALCIUM ALUMINATE

(51) International classification :B01D53/62,B01D53/14,C01F7/04
(31) Priority Document No :2010901878
(32) Priority Date :03/05/2010
(33) Name of priority country :Australia
(86) International Application No :PCT/AU2011/000504
Filing Date :02/05/2011
(87) International Publication No :WO 2011/137480
(61) Patent of Addition to Application Number :NA
Filing Date :NA
(62) Divisional to Application Number :NA
Filing Date :NA

(71)**Name of Applicant :**
1)BHP BILLITON WORSLEY ALUMINA PTY LTD
Address of Applicant :PO Box 344 Collie Western Australia 6225 Australia
(72)**Name of Inventor :**
1)ROSENBERG Steven Philip
2)BOOM Eric Antoinette Jozef Marie

(57) Abstract :
A carbon dioxide sequestration process is disclosed. The process comprises the steps of a) introducing a source of carbon dioxide to a caustic aluminate solution to form a first treated stream comprising carbonate ions in solution and aluminium hydroxide in solid form; b) subjecting the first treated stream to solid/liquid separation to recover alumina values in the form of aluminium hydroxide and produce a first clarified treated stream; c) mixing the first clarified treated stream with tricalcium aluminate to form a second treated stream comprising calcium carbonate in solid form aluminate ions in solution and hydroxyl ions in solution; and d) subjecting the second treated stream to solid/liquid separation to remove calcium carbonate within which carbon dioxide has been sequestered and produce a second clarified treated liquor stream.

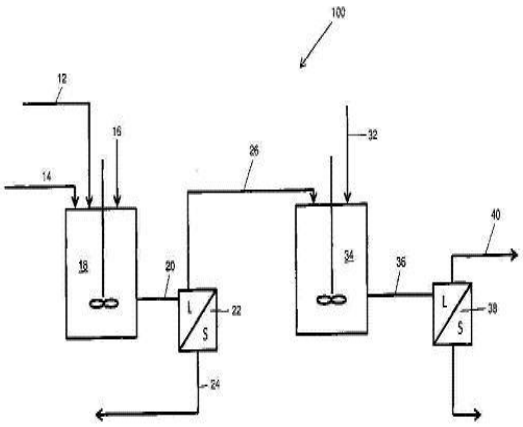

Figure 2

No. of Pages : 28 No. of Claims : 10

(12) PATENT APPLICATION PUBLICATION
(19) INDIA
(22) Date of filing of Application :31/10/2012

(21) Application No.9281/CHENP/2012 A
(43) Publication Date : 25/12/2015

(54) Title of the invention : PROCESS FOR OPERATING A HIGH TEMPERATURE FUEL CELL STACK

(51) International classification :H01M8/04,H01M8/12
(31) Priority Document No :NA
(32) Priority Date :NA
(33) Name of priority country :NA
(86) International Application No :PCT/EP2010/002765
Filing Date :05/05/2010
(87) International Publication No :WO 2011/137916
(61) Patent of Addition to Application Number :NA
Filing Date :NA
(62) Divisional to Application Number :NA
Filing Date :NA

(71)**Name of Applicant :**
1)TOPSOE FUEL CELL A/S
Address of Applicant :Nym¸llevej 66 DK 2800 Kgs. Lyngby Denmark
2)TECHNICAL UNIVERSITY OF DENMARK
(72)**Name of Inventor :**
1)NEDERGAARD Clausen Thomas
2)ROSTRUP NIELSEN Thomas
3)GOTTRUP BARFOD Rasmus
4)VANG HENDRIKSEN Peter
5)HJELM Johan
6)JACOBSEN Joachim
7)B˜GILD HANSEN John

(57) Abstract :
Process for operating a high temperature fuel cell stack the process comprising the following steps: b) connecting the fuel cell stack in parallel to a power supply unit at a predefined temperature and/or voltage of the fuel cell stack h) applying a voltage from the power supply unit of between 700 to 1500 mV per fuel cell across the fuel cell stack irrespective of the electromotive force of the fuel cell stack i) heating up the fuel cell stack from the predefined temperature to operation temperature while maintaining the voltage per fuel cell from the power supply unit j) maintaining the fuel cell stack at or above a predetermined operation temperature and/or above a predetermined voltage until the fuel cell stack is to be put into operation k) supplying fuel to the fuel cell stack 1) disconnecting the power supply unit followed by m) connecting a power requiring load to the fuel cell stack.

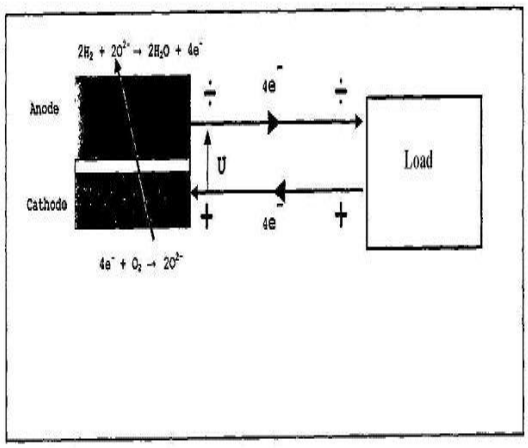

Fig . 1

No. of Pages : 32 No. of Claims : 14

(12) PATENT APPLICATION PUBLICATION
(19) INDIA
(22) Date of filing of Application :31/10/2012
(21) Application No.9282/CHENP/2012 A
(43) Publication Date : 25/12/2015

(54) Title of the invention : IMPROVING ADHESION OF ORGANIC COATINGS ON GLASS

(51) International classification :C03C17/42,B65D23/08
(31) Priority Document No :12/755458
(32) Priority Date :07/04/2010
(33) Name of priority country :U.S.A.
(86) International Application No :PCT/US2011/031595
Filing Date :07/04/2011
(87) International Publication No :WO 2011/127294
(61) Patent of Addition to Application Number :NA
Filing Date :NA
(62) Divisional to Application Number :NA
Filing Date :NA

(71)**Name of Applicant :**
1)OWENS BROCKWAY GLASS CONTAINER INC.
Address of Applicant :One Michael Owens Way Perrysburg OH 43551 U.S.A.
(72)**Name of Inventor :**
1)REMINGTON Michael P. Jr.
2)MARSH Dennis R.

(57) Abstract :
Methods of manufacturing and coating glass including depositing an inorganic oxide on an exterior surface of the glass and then applying an organofunctional silane to the glass over the inorganic oxide. The methods also may include applying an organic coating to the glass over the organofunctional silane and curing the organic coating.

No. of Pages : 18 No. of Claims : 23

(12) PATENT APPLICATION PUBLICATION
(19) INDIA
(22) Date of filing of Application :31/10/2012
(21) Application No.9284/CHENP/2012 A
(43) Publication Date : 25/12/2015

(54) Title of the invention : A SUPRA THRESHOLD TEST AND A SUB PIXEL STRATEGY FOR USE IN MEASUREMENTS ACROSS THE FIELD OF VISION

(51) International classification :A61B3/024
(31) Priority Document No :61/332023
(32) Priority Date :06/05/2010
(33) Name of priority country :U.S.A.
(86) International Application No :PCT/GB2011/000689
Filing Date :05/05/2011
(87) International Publication No :WO 2011/138587
(61) Patent of Addition to Application Number :NA
Filing Date :NA
(62) Divisional to Application Number :NA
Filing Date :NA

(71)**Name of Applicant :**
1)UCL BUSINESS PLC
Address of Applicant :The Network Building 97 Tottenham Court Road London W1T 4TP U.K.
(72)**Name of Inventor :**
1)CRABB David
2)BERGIN Clara
3)GARWAY HEATH David
4)VERDON ROE Gay
5)WESTCOTT Mark

(57) Abstract :
One embodiment of the invention provides a method for performing a supra threshold test of sensitivity across a visual field of a subject. The method includes presenting a stimulus at each location of a set of locations spread across the visual field and obtaining for each stimulus a result indicating whether or not the stimulus was seen by the subject. The method further includes determining for each location whether or not to re present a stimulus at that location wherein for a given location the determining involves combining results obtained from multiple locations. These multiple locations are defined by a cluster associated with the given location with the cluster being determined based on the paths of optic nerve fibre bundles across the visual field.

No. of Pages : 47 No. of Claims : 52

(12) PATENT APPLICATION PUBLICATION
(21) Application No.929/CHE/2014 A
(19) INDIA
(22) Date of filing of Application :25/02/2014
(43) Publication Date : 25/12/2015

(54) Title of the invention : A PROCESS FOR MODIFYING HIGH MANNOSE AND GALACTOSYLATION CONTENT OF A GLYCOPROTEIN COMPOSITION

(51) International classification :C07K
(31) Priority Document No :NA
(32) Priority Date :NA
(33) Name of priority country :NA
(86) International Application No :NA
Filing Date :NA
(87) International Publication No : NA
(61) Patent of Addition to Application Number :NA
Filing Date :NA
(62) Divisional to Application Number :NA
Filing Date :NA

(71)**Name of Applicant :**
1)Dr. Reddy™s Laboratories Limited
Address of Applicant :8-2-337, Road No. 3, Banjara Hills, Hyderabad, Andhra Pradesh, India- Andhra Pradesh India
(72)**Name of Inventor :**
1)Paranandi Ananta Madhava Ram
2)Indraneel Dasari
3)Sreenath Kadreppa
4)Senthil Kumar Baskaran
5)Vidya Lakshmi Krishna P
6)Naresh Babu S
7)Shinto Antony

(57) Abstract :
The invention describes a cell culture process for obtaining a glycoprotein composition with increased high mannose glycoforms and/or reduced galactosylated glycoforms. The method involves culturing cells producing said glycoprotein composition by a process involving temperature and pH shift(s).

No. of Pages : 25 No. of Claims : 10

(12) PATENT APPLICATION PUBLICATION
(19) INDIA
(22) Date of filing of Application :27/12/2012

(21) Application No.10833/CHENP/2012 A
(43) Publication Date : 25/12/2015

(54) Title of the invention : IMPROVED INSECTICIDAL COMPOSITIONS COMPRISING CYCLIC CARBONYLAMIDINES

(51) International classification :A01N43/76,A01N43/78,A01N43/836
(31) Priority Document No :10167799.5
(32) Priority Date :29/06/2010
(33) Name of priority country :EPO
(86) International Application No :PCT/EP2011/060629
Filing Date :24/06/2011
(87) International Publication No :WO 2012/000902
(61) Patent of Addition to Application Number :NA
Filing Date :NA
(62) Divisional to Application Number :NA
Filing Date :NA

(71)**Name of Applicant :**
1)BAYER INTELLECTUAL PROPERTY GMBH
Address of Applicant :Alfred Nobel Strasse 10 40789 Monheim Germany
(72)**Name of Inventor :**
1)JESCHKE Peter
2)MALSAM Olga
3)L–SEL Peter

(57) Abstract :
Compositions comprising at least one cyclic carbonylamidine of the formula (I) in which Y, G, Z, Q, R1 and R2 are as defined in the description and at least one activity enhancer selected from the group consisting of penetrants and ammonium or phosphonium salts of the formula (II) in which D, n, R8, R9, R10, R11 and R12 are as defined in the description.

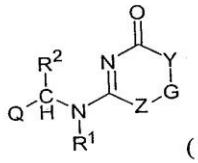

(I)

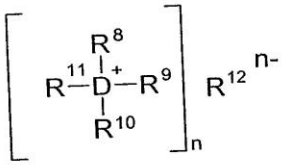

(II)

No. of Pages : 73 No. of Claims : 12

(12) PATENT APPLICATION PUBLICATION
(19) INDIA
(22) Date of filing of Application :27/12/2012
(21) Application No.10840/CHENP/2012 A
(43) Publication Date : 25/12/2015

(54) Title of the invention : STRUCTURE FOR CYLINDRICAL SOLAR COLLECTOR

(51) International classification :F24J2/14,F24J2/54,F16C3/02
(31) Priority Document No :P201000742
(32) Priority Date :07/06/2010
(33) Name of priority country :Spain
(86) International Application No :PCT/ES2011/000188
Filing Date :06/06/2011
(87) International Publication No :WO 2011/154567
(61) Patent of Addition to Application Number :NA
Filing Date :NA
(62) Divisional to Application Number :NA
Filing Date :NA

(71)**Name of Applicant :**
1)ABENGOA SOLAR NEW TECHNOLOGIES S. A.
Address of Applicant :Avenida de la Buhaira 2 E 41018 Sevilla Spain
(72)**Name of Inventor :**
1)MU'OZ GILABERT Felix

(57) Abstract :
The invention relates to a structure for a cylindrical solar collector, comprising a lattice bar structure (16) with a beam or torque box (1) at the centre thereof, said structure being capable of supporting receivers (2) of any shape and continuous or discontinuous primary reflectors (17, 17) also of any shape (parabolic, parametric, etc.). The structure can also support a secondary reconcentrator. According to the invention, the torque box (1) is multi-face polyhedron or cylinder that is divided into various sections (3), each of the sections (3) in turn being formed by multiple plates (4). The surrounding triangular lattice structure (16) is formed with L-sections, all of the connections being formed with rivets or the like. The structure comprises multiple hexagonal frames (19) along the length of the torque box (1), surrounding and reinforcing the latter and multiple supports that hold the receiver above the torque box (1). (Figure 3).

No. of Pages : 16 No. of Claims : 19

(12) PATENT APPLICATION PUBLICATION
(21) Application No.4097/CHE/2013 A
(19) INDIA
(22) Date of filing of Application :12/09/2013
(43) Publication Date : 25/12/2015

(54) Title of the invention : DIVISIONAL SETTING OF BLADES AND TEETH FOR SCRAPING OF COCONUT KERNEL

(51) International classification :A01G
(31) Priority Document No :NA
(32) Priority Date :NA
(33) Name of priority country :NA
(86) International Application No :NA
Filing Date :NA
(87) International Publication No : NA
(61) Patent of Addition to Application Number :4504/CHE/2011
Filed on :22/12/2011
(62) Divisional to Application Number :NA
Filing Date :NA

(71)**Name of Applicant :**
1)MANPUZHACKAL THOMAS GEORGE VAIDYAR
Address of Applicant :MAMPUZHACKAL (H), CHEMPERI (P.O), KANNURE (DT) - 670 632 Kerala India
(72)**Name of Inventor :**
1)MANPUZHACKAL THOMAS GEORGE VAIDYAR

(57) Abstract :
Divisional setting of blades and teethfor scraping of coconut kernel is an an additional filing of patent, The main patent application is submitted on 22/12/2011, with the tittle alternately arranged blades and teeth for scraping of coconut and attained the application number 4504/CHE/2011. This request for patent consists of further invention that can improve the mechanism of assembling of the implement In previous method bending and assembling is explanid in this system cutting of blade sheeths are explained This method also can forword further innovations and modifications.

No. of Pages : 5 No. of Claims : 3

(12) PATENT APPLICATION PUBLICATION
(21) Application No.5649/CHE/2013 A
(19) INDIA
(22) Date of filing of Application :07/12/2013
(43) Publication Date : 25/12/2015

(54) Title of the invention : A METHOD FOR FABRICATING CORNEAL-GRAFTS USING MAMMALIAN CHOLECYST-DERIVED EXTRACELLULAR MATRIX

(51) International classification :A61B
(31) Priority Document No :NA
(32) Priority Date :NA
(33) Name of priority country :NA
(86) International Application No :NA
Filing Date :NA
(87) International Publication No : NA
(61) Patent of Addition to Application Number :NA
Filing Date :NA
(62) Divisional to Application Number :NA
Filing Date :NA

(71)**Name of Applicant :**
1)SREE CHITRA TIRUNAL INSTITUTE FOR MEDICAL SCIENCES AND TECHNOLOGY
Address of Applicant :Biomedical Technology Wing, Poojappura, Thiruvananthapuram 695 012, India Kerala India
(72)**Name of Inventor :**
1)Thapasimuthu Vijayamma Anilkumar
2)Sainulabdeen Anoop
3)Syam Kunnekkatu Venugopal

(57) Abstract :
TITLE: A METHOD FOR FABRICATING CORNEAL-GRAFTS USING MAMMALIAN CHOLECYST-DERIVED EXTRACELLULAR MATRIX This invention relates to a process for fabricating corneal grafts comprising the steps of collecting cholecyst from slaughtered animals followed by ex situ incubation of the cholecyst in a stabilizing agent and isolation of the extracellular matrix therefrom.

No. of Pages : 8 No. of Claims : 5

(12) PATENT APPLICATION PUBLICATION
(21) Application No.940/CHE/2014 A
(19) INDIA
(22) Date of filing of Application :25/02/2014
(43) Publication Date : 25/12/2015

(54) Title of the invention : SYSTEM AND METHOD FOR ELECTROPHYSIOLOGICAL MONITORING OF HEART USING DRY ELECTRODES

(51) International classification	:H01J	
(31) Priority Document No	:NA	
(32) Priority Date	:NA	
(33) Name of priority country	:NA	
(86) International Application No	:NA	
Filing Date	:NA	
(87) International Publication No	: NA	
(61) Patent of Addition to Application Number	:NA	
Filing Date	:NA	
(62) Divisional to Application Number	:NA	
Filing Date	:NA	

(71)**Name of Applicant :**
1)INDIAN INSTITUTE OF TECHNOLOGY MADRAS
Address of Applicant :DELHI AVE, INDIAN INSTITUTE OF TECHNOLOGY, CHENNAI - 600 036 Tamil Nadu India
(72)**Name of Inventor :**
1)DR. VENKATESH BALASUBRAMANIAN
2)DR. SOMA GUHATHAKURTA
3)ROBERT RAJKUMAR. S

(57) Abstract :
A system and method for electrophysiological monitoring of heart using dry electrodes. An ultra-high channel jacket having at least one dry electrode for measuring the electrical activity at the high potential areas of a subject. The dry electrodes are designed by developing a polymer based 3-dimensional printed electrode in RPT. Further, the electrode is subjected to electro-less nickel plating and gold plating subsequently. The information collected from the electrodes of high potential areas of the subject is further mapped with a three-dimensional geometry unit. The mapped results can be finally printed on to a media for providing accurate monitoring of electrophysiological activities of the heart in order thereby permit the medical expert to effectively diagnose the heart failures of the subject.

No. of Pages : 22 No. of Claims : 10

(12) PATENT APPLICATION PUBLICATION
(19) INDIA
(22) Date of filing of Application :02/04/2014

(21) Application No.2474/CHENP/2014 A
(43) Publication Date : 25/12/2015

(54) Title of the invention : HYBRID VEHICLE CONTROL DEVICE AND CONTROL METHOD

(51) International classification :B60N
(31) Priority Document No :2011193018
(32) Priority Date :05/09/2011
(33) Name of priority country :Japan
(86) International Application No :PCT/JP2012/072578
Filing Date :05/09/2012
(87) International Publication No :WO 2013/035730
(61) Patent of Addition to Application Number :NA
Filing Date :NA
(62) Divisional to Application Number :NA
Filing Date :NA

(71)**Name of Applicant :**
1)HONDA MOTOR CO. LTD.
Address of Applicant :1 1 Minami Aoyama 2 chome Minato ku Tokyo 1078556 Japan
(72)**Name of Inventor :**
1)KAWATA Kohei
2)KON Takashi
3)TAKEUCHI Masahiro
4)KURODA Shigetaka
5)HONMA Yuki
6)YAMADA Tetsuya
7)YOKOO Kentaro

(57) Abstract :
Provided are a hybrid vehicle control device and control method that suitably determine the possibility of a gear range alteration on the basis of a predicted amount of charging and thereby can increase vehicle fuel efficiency by obtaining a greater amount of charging. A first amount of charging is estimated that is the amount of charging of an electricity storage unit when performing regeneration for a predetermined regeneration time by an electric motor (4) in the state of maintaining the gear range of a stepped transmission. Also a second amount of charging is estimated that is the amount of charging of the electricity storage unit when regeneration by the electric motor (4) is performed until the regeneration time has elapsed and the gear range is altered during the regeneration time to a target gear range. Then it is determined whether or not to maintain the gear range or to alter to the target gear range on the basis of the estimated first and second amounts of charging.

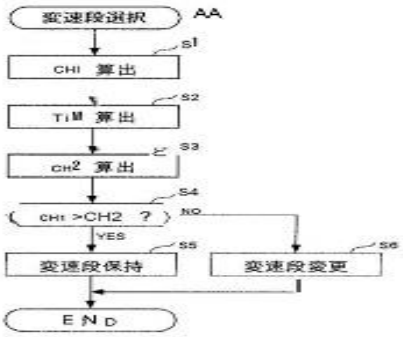

S1 CALCULATE CH1
S2 CALCULATE TIM
S3 CALCULATE CH2
S5 MAINTAIN GEAR RANGE
S6 ALTER GEAR RANGE
AA GEAR RANGE SELECTION

No. of Pages : 174 No. of Claims : 27

(12) PATENT APPLICATION PUBLICATION
(19) INDIA
(22) Date of filing of Application :10/01/2014
(21) Application No.263/CHENP/2014 A
(43) Publication Date : 25/12/2015

(54) Title of the invention : ASSEMBLY FOR AN ELECTRICALLY OPERATED VALVE

(51) International classification :F02M51/00,F02M59/46,F02M61/16
(31) Priority Document No :11170541.4
(32) Priority Date :20/06/2011
(33) Name of priority country :EPO
(86) International Application No :PCT/EP2012/061191
Filing Date :13/06/2012
(87) International Publication No :WO 2012/175384
(61) Patent of Addition to Application Number :NA
Filing Date :NA
(62) Divisional to Application Number :NA
Filing Date :NA

(71)**Name of Applicant :**
1)DELPHI TECHNOLOGIES HOLDING S.A.R.L.
Address of Applicant :Avenue de Luxembourg L 4940 Bascharage Luxembourg
(72)**Name of Inventor :**
1)DUPONT Richard
2)MARECHAL Michel
3)CARDON Christophe

(57) Abstract :
The invention relates to an assembly (30) for an electrically operated valve (34) in the automotive field aimed to increase the injection pres sure of fuel distributed to combustion chambers said assembly (30) comprising both a coil unit (32) wherein a solenoid (33) can control the movements of the electrically operated valve (34) in a housing along a given axis and an hydraulic unit (35) to provide fuel at the injection pressure a clip ring (38) being located into a cavity of the coil unit (32) and a cavity of the hydraulic unit (35) to maintain the coil unit (32) and the hydraulic unit (35) associated. The invention is characterized in that the coil unit (32) presents a plurality of slots (46) providing access to the clip ring (38) across the coil unit from the exterior of the assembly.

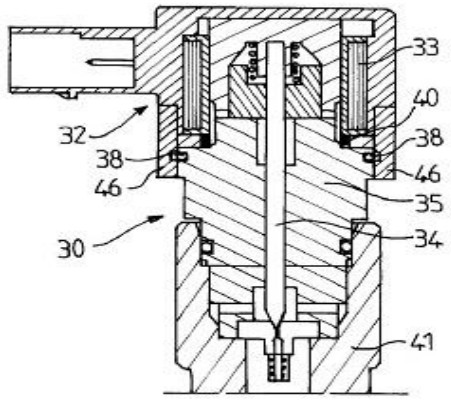

FIG.3

No. of Pages : 14 No. of Claims : 10

(12) PATENT APPLICATION PUBLICATION
(19) INDIA
(22) Date of filing of Application :22/08/2013
(21) Application No.6786/CHENP/2013 A
(43) Publication Date : 25/12/2015

(54) Title of the invention : ROTARY WING AIRCRAFT VIBRATION CONTROL SYSTEM WITH RESONANT INERTIAL ACTUATORS

(51) International classification :B64C27/00,F16F7/10
(31) Priority Document No :61/439710
(32) Priority Date :04/02/2011
(33) Name of priority country :U.S.A.
(86) International Application No :PCT/US2012/023802
Filing Date :03/02/2012
(87) International Publication No :WO 2012/106616
(61) Patent of Addition to Application Number :NA
Filing Date :NA
(62) Divisional to Application Number :NA
Filing Date :NA

(71)**Name of Applicant :**
1)LORD CORPORATION
Address of Applicant :111 Lord Drive Attn: IP Legal Dept. 111 Lord Drive Cary North Carolina 27511 U.S.A.
(72)**Name of Inventor :**
1)BLACK Paul
2)SWANSON Doug
3)BADRE ALAM Askari
4)EDEAL David
5)PEDERSEN Douglas

(57) Abstract :
A control system for resonant inertial actuators estimates operating parameters of the resonant inertial actuators based on voltage and current feedback and dynamically limits selected parameters to maintain the safe efficient and cost effective operation of the resonant inertial actuators. Resistance within the electrical drives for the resonant inertial actuators is estimated from the voltage and current feedback and in conjunction with the modeling of the resonant inertial actuators other operating parameters are calculated or otherwise estimated. Having regard for the responsiveness of the resonant inertial actuators to changes in command signals the command signals are adjusted to dynamically limit the estimated parameters.

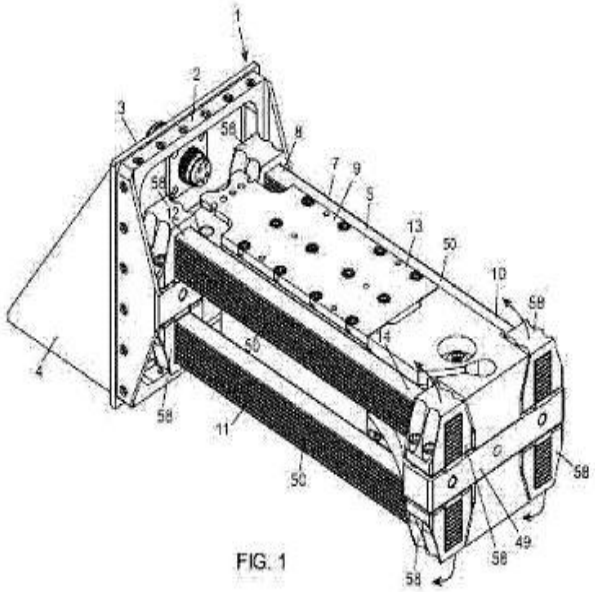

FIG. 1

No. of Pages : 60 No. of Claims : 39

(12) PATENT APPLICATION PUBLICATION
(19) INDIA
(22) Date of filing of Application :06/11/2012
(21) Application No.9435/CHENP/2012 A
(43) Publication Date : 25/12/2015

(54) Title of the invention : APPARATUS FOR MANUFACTURING MULTILAYER POLYMERIC FILMS

(51) International classification :B29C47/06,B29C47/58
(31) Priority Document No :61/332382
(32) Priority Date :07/05/2010
(33) Name of priority country :U.S.A.
(86) International Application No :PCT/US2011/034898
Filing Date :03/05/2011
(87) International Publication No :WO 2011/140019
(61) Patent of Addition to Application Number :NA
Filing Date :NA
(62) Divisional to Application Number :NA
Filing Date :NA

(71)**Name of Applicant :**
1)3M INNOVATIVE PROPERTIES COMPANY
Address of Applicant :3M Center Post Office Box 33427 Saint Paul Minnesota 55133 3427 U.S.A.
(72)**Name of Inventor :**
1)NEAVIN Terence D.
2)BIEGLER Robert M.
3)FAY William T.

(57) Abstract :
A feedblock including a first packet creator (56) that forms a first packet including a first plurality of polymeric layers the first plurality of layers including at least four first individual polymeric layers; and a second packet creator (58) that forms a second packet including a second plurality of polymeric layers the second plurality of layers including at least four second individual polymeric layers wherein the first and second packet creators are configured such that for each packet creator respective individual polymeric layers of the plurality of polymeric layers are formed at approximately the same time. The feedblock may include a packet combiner (54) that receives and combines the first and second primary packets to form a multilayer stream. In some examples at least one of the first and second primary packets may be spread in the cross web direction prior to being combined with one another.

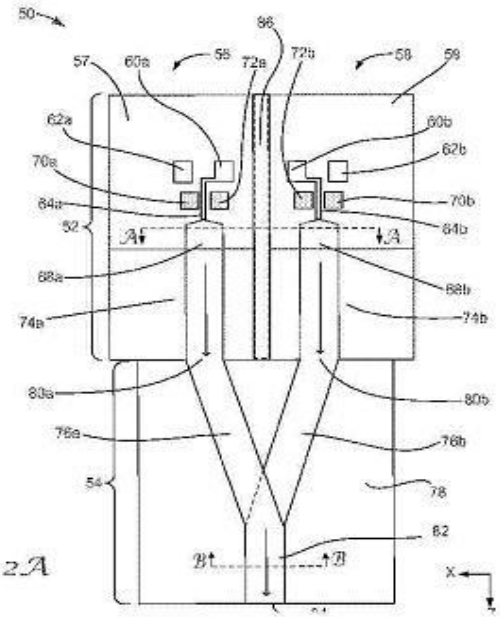

FIG. 2A

No. of Pages : 86 No. of Claims : 23

(12) PATENT APPLICATION PUBLICATION
(19) INDIA
(22) Date of filing of Application :01/04/2014

(21) Application No.1768/CHE/2014 A
(43) Publication Date : 25/12/2015

(54) Title of the invention : SERVER SYSTEM FOR PROVIDING CURRENT DATA AND PAST DATA TO CLIENTS •

(51) International classification	:D21H 23/00
(31) Priority Document No	:13/935,745
(32) Priority Date	:05/07/2013
(33) Name of priority country	:U.S.A.
(86) International Application No	:NA
Filing Date	:NA
(87) International Publication No	: NA
(61) Patent of Addition to Application Number	:NA
Filing Date	:NA
(62) Divisional to Application Number	:NA
Filing Date	:NA

(71)**Name of Applicant :**
1)THE BOEING COMPANY
Address of Applicant :100 North Riverside Plaza, Chicago, IL 60606-2016, USA U.S.A.
(72)**Name of Inventor :**
1)NOAH ERIC AARON
2)DAVE BENNETT
3)WILL R. CUMMINS
4)NOAH H. WECKER

(57) Abstract :
Please see the attached abstract

No. of Pages : 81 No. of Claims : 20

(12) PATENT APPLICATION PUBLICATION
(19) INDIA
(22) Date of filing of Application :29/10/2013

(21) Application No.4865/CHE/2013 A
(43) Publication Date : 25/12/2015

(54) Title of the invention : AN INTERNAL COMBUSTION ENGINE

(51) International classification :H02K33/00
(31) Priority Document No :NA
(32) Priority Date :NA
(33) Name of priority country :NA
(86) International Application No :NA
Filing Date :NA
(87) International Publication No : NA
(61) Patent of Addition to Application Number :NA
Filing Date :NA
(62) Divisional to Application Number :NA
Filing Date :NA

(71)**Name of Applicant :**
1)TVS MOTOR COMPANY LIMITED
Address of Applicant :JAYALAKSHMI ESTATES • NO.29 (OLD NO.8) HADDOWS ROAD, CHENNAI 600 006 Tamil Nadu India
(72)**Name of Inventor :**
1)KANDREGULA SRINIVASA RAO
2)KIRAN KULKAMI
3)DHARMARAJ KRISHNAPRASATH

(57) Abstract :
The present subject matter relates to a four cycle internal combustion engine unit with a single speed transmission and forwardly titled cylinder block comprising a kick start system 150, a plurality of fins 105,121,122 and a cooling fan 116, and a breather circuit 163. A laterally extending deflector 120 is provided external to the engine unit partially surrounding a cylinder block. One end of the deflector opens towards and faces the ground. [Abstract to be published with FIG.6]

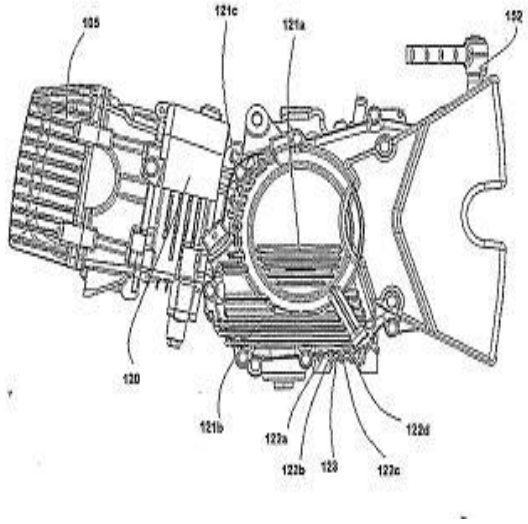

No. of Pages : 29 No. of Claims : 10

(12) PATENT APPLICATION PUBLICATION
(19) INDIA
(22) Date of filing of Application :23/08/2013

(21) Application No.6825/CHENP/2013 A
(43) Publication Date : 25/12/2015

(54) Title of the invention : E USED DIGITAL ASSETS AND POST ACQUISITION REVENUE

(51) International classification :G06F21/00
(31) Priority Document No :61/446015
(32) Priority Date :23/02/2011
(33) Name of priority country :U.S.A.
(86) International Application No :PCT/US2012/026408
Filing Date :23/02/2012
(87) International Publication No :WO 2012/116239
(61) Patent of Addition to Application Number :NA
Filing Date :NA
(62) Divisional to Application Number :NA
Filing Date :NA

(71)**Name of Applicant :**
1)CATCH MEDIA INC.
Address of Applicant :3832 Mill Glen Drive Douglasville GA 30135 U.S.A.
(72)**Name of Inventor :**
1)BEN YAACOV Yaacov
2)BEN YAACOV Boaz
3)LIEBERMAN Abraham

(57) Abstract :
A method for resale of digital assets including registering purchase of a digital asset by a first consumer via a first e tailer for presentation to the first consumer on at least one first device the digital asset being published by a publisher wherein an e tailer sells digital assets published by the publisher to consumers enabling in response to a resale permission instruction by the publisher the first consumer to offer the digital asset for re sale as an e used digital asset via a plurality of e tailers and further registering purchase of the e used digital asset by either (a) an e tailer or (b) a second consumer or (c) another entity that buys and sells digital assets. A system is also described and claimed.

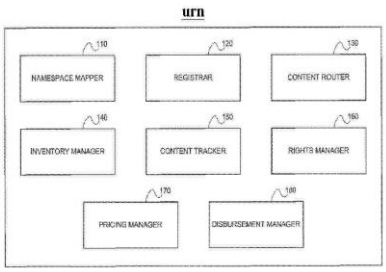

FIG. 1

No. of Pages : 108 No. of Claims : 76

(12) PATENT APPLICATION PUBLICATION
(19) INDIA
(22) Date of filing of Application :30/10/2012
(21) Application No.9250/CHENP/2012 A
(43) Publication Date : 25/12/2015

(54) Title of the invention : OIL FILTER AND VALVE DEVICE

(51) International classification :B01D35/02,B01D29/01,B01D39/10
(31) Priority Document No :2010-198316
(32) Priority Date :03/09/2010
(33) Name of priority country :Japan
(86) International Application No :PCT/JP2011/066572
Filing Date :21/07/2011
(87) International Publication No :WO 2012/029431 A1
(61) Patent of Addition to Application Number :NA
Filing Date :NA
(62) Divisional to Application Number :NA
Filing Date :NA

(71)**Name of Applicant :**
1)KOMATSU LTD.
Address of Applicant :2 3 6 Akasaka Minato ku Tokyo 1078414 Japan
(72)**Name of Inventor :**
1)HORI Shuuji
2)AKASHI Mitsumasa
3)TAJIMA Masayuki

(57) Abstract :
In order to ensure sufficient rigidity and to facilitate molding work one surface of a filter body (11) has oil passages (12a 12b 12c) etched to a depth of half the plate thickness and the other surface of the filter body (11) has through holes (13) formed by etching at the positions in which the oil passages (12a 12b 12c) are formed.

No. of Pages : 24 No. of Claims : 7

(12) PATENT APPLICATION PUBLICATION
(19) INDIA
(22) Date of filing of Application :30/10/2012

(21) Application No.9251/CHENP/2012 A
(43) Publication Date : 25/12/2015

(54) Title of the invention : METHODS AND APPARATUS FOR GEOGRAPHICALLY BASED EVENT SCHEDULING

(51) International classification :G06F19/00,G06F17/00
(31) Priority Document No :61/329705
(32) Priority Date :30/04/2010
(33) Name of priority country :U.S.A.
(86) International Application No :PCT/US2011/034526
Filing Date :29/04/2011
(87) International Publication No :WO 2011/137327
(61) Patent of Addition to Application Number :NA
Filing Date :NA
(62) Divisional to Application Number :NA
Filing Date :NA

(71)**Name of Applicant :**
1)SCHULTZ Gary Allen
Address of Applicant :11391 Southwest Ironwood Loop Tigard OR 97223 U.S.A.
(72)**Name of Inventor :**
1)SCHULTZ Gary Allen

(57) Abstract :
Methods and apparatus are provided to streamline event scheduling and facilitate commerce and interpersonal exchanges by scheduling events in predefined time slots based on geographic locations of the events venues. An automated event scheduling system (100) schedules related events based on geographic locations of the events venues by partitioning (210) a geographic region into discrete zones (570a f 670a f 770a f) assigning (230 430) one or more time slots (971 976) to each of the zones and scheduling (880 895) events with venues located in each zone to transpire during the time slots assigned to that zone.

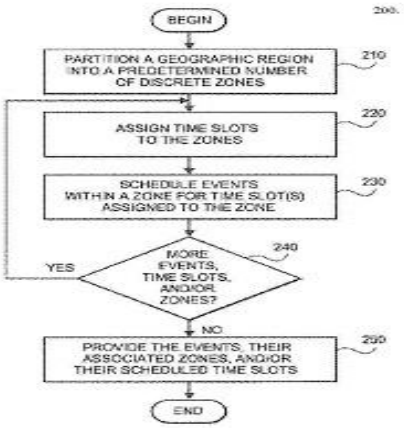

FIG. 2

No. of Pages : 54 No. of Claims : 20

(12) PATENT APPLICATION PUBLICATION
(19) INDIA
(22) Date of filing of Application :20/11/2012

(21) Application No.9762/CHENP/2012 A
(43) Publication Date : 25/12/2015

(54) Title of the invention : SHARED CIRCUIT SWITCHED SECURITY CONTEXT

(51) International classification :H04L 9/00
(31) Priority Document No :NA
(32) Priority Date :NA
(33) Name of priority country :NA
(86) International Application No :PCT/CN2010/072413
Filing Date :04/05/2010
(87) International Publication No :WO/2011/137580
(61) Patent of Addition to Application Number :NA
Filing Date :NA
(62) Divisional to Application Number :NA
Filing Date :NA

(71)**Name of Applicant :**
1)QUALCOMM INCORPORATED
Address of Applicant :ATTN: International IP Administration 5775 Morehouse Drive San Diego California 92121-1714 U.S.A.
(72)**Name of Inventor :**
1)XIPENG ZHU
2)WOLFGANG GRANZOW
3)ADRIAN ESCOTT

(57) Abstract :
(EN)Creation or update of a security context between user equipment and MSC/VLR (Mobile Switching Centre/Visitor Location Register) for circuit switched domain services is provided. The creation or update is based on conversion of the security context used in an evolved Universal Terrestrial Radio Access Network (E-UTRAN) in the Mobility Management Entity (MME) to a security context for the circuit switched domain target system and transferring it to a MSC/VLR. When user equipment is moved from E-UTRAN to GSM EDGE Radio Access Network/Universal Terrestrial Radio Access Network (GERAN/UTRAN), a MME does not need toperform authentication and key agreement procedures to establish shared circuit switched security context for the user equipment.

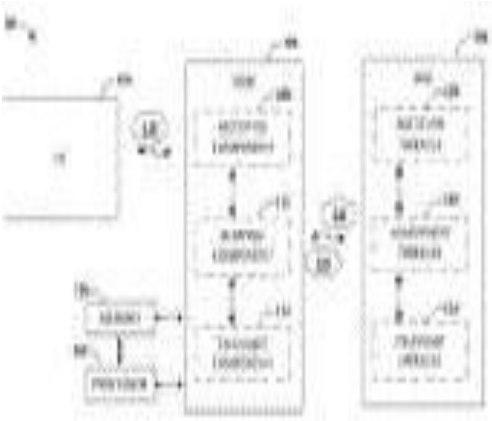

FIG. 1

No. of Pages : 52 No. of Claims : 31

(12) PATENT APPLICATION PUBLICATION
(19) INDIA
(22) Date of filing of Application :15/10/2013
(21) Application No.8341/CHENP/2013 A
(43) Publication Date : 25/12/2015

(54) Title of the invention : MULTIFUNCTIONAL BIOREACTOR SYSTEM AND METHODS FOR CELL SORTING AND CULTURING

(51) International classification :C12M1/00
(31) Priority Document No :61/468573
(32) Priority Date :29/03/2011
(33) Name of priority country :U.S.A.
(86) International Application No :PCT/US2012/000182
Filing Date :29/03/2012
(87) International Publication No :WO 2013/048546
(61) Patent of Addition to Application Number :NA
Filing Date :NA
(62) Divisional to Application Number :NA
Filing Date :NA

(71)**Name of Applicant :**
1)ZHANG Yongxin
Address of Applicant :3437 High Vista Dr. Carrollton TX 75007 U.S.A.
(72)**Name of Inventor :**
1)ZHANG Yongxin

(57) Abstract :
The present disclosure relates to bioreactors and more particularly bioreactors for growing and separating cells. The bioreactor comprises at least one reaction chamber an adjustable magnetic field and a multifunctional cell supporting system and may further comprise an optional protective perfusion system and an optional computerized control system

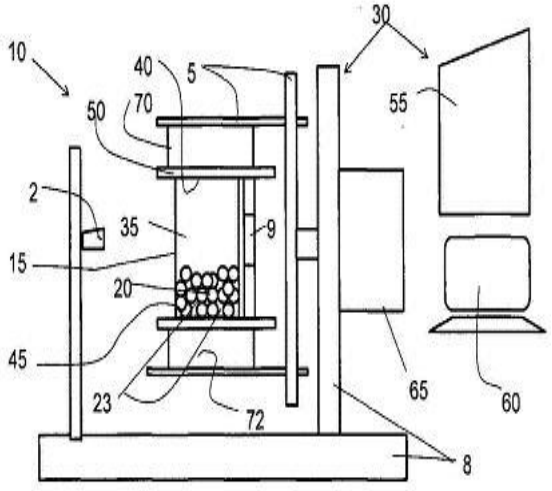

Fig. 1

No. of Pages : 33 No. of Claims : 30

(12) PATENT APPLICATION PUBLICATION
(19) INDIA
(22) Date of filing of Application :31/10/2012
(21) Application No.9265/CHENP/2012 A
(43) Publication Date : 25/12/2015

(54) Title of the invention : PHOTOVOLTAIC CELL COMPRISING A REGION SUSPENDED BY A CONDUCTIVE PATTERN AND PRODUCTION PROCESS

(51) International classification :H01L31/0224
(31) Priority Document No :10/01948
(32) Priority Date :06/05/2010
(33) Name of priority country :France
(86) International Application No :PCT/FR2011/000264
Filing Date :29/04/2011
(87) International Publication No :WO 2011/138519 A2
(61) Patent of Addition to Application Number :NA
Filing Date :NA
(62) Divisional to Application Number :NA
Filing Date :NA

(71)**Name of Applicant :**
1)COMMISSARIAT LENERGIE ATOMIQUE ET AUX ENERGIES ALTERNATIVES
Address of Applicant :25 rue Leblanc Btiment Le Ponant D F 75015 Paris France
(72)**Name of Inventor :**
1)CABAL Rapha«l
2)GRANGE Bernadette

(57) Abstract :
Photovoltaic cell comprising an region suspended by a conductive pattern and production process The photovoltaic cell comprises an electrically conductive passivation film (2) separated from an electrically conductive collection layer (3) and a substrate (1). An electrically conductive connection pattern (4) maintains an area of the collection layer (3) in suspension with respect to the passivation film (2). Suspension of the collection layer (3) is obtained by making an etching agent pass through a permeable area of the collection layer (3). (Figure 1)

No. of Pages : 21 No. of Claims : 10

(12) PATENT APPLICATION PUBLICATION
(19) INDIA
(22) Date of filing of Application :31/10/2012
(21) Application No.9267/CHENP/2012 A
(43) Publication Date : 25/12/2015

(54) Title of the invention : LASER BEAM ANALYSIS APPARATUS

(51) International classification :H01S3/10,H01S5/0683
(31) Priority Document No :12/756476
(32) Priority Date :08/04/2010
(33) Name of priority country :U.S.A.
(86) International Application No :PCT/US2011/031776
Filing Date :08/04/2011
(87) International Publication No :WO 2011/127400
(61) Patent of Addition to Application Number :NA
Filing Date :NA
(62) Divisional to Application Number :NA
Filing Date :NA

(71)**Name of Applicant :**
1)HAAS LASER TECHNOLOGIES INC.
Address of Applicant :37 Ironia Road Flanders NJ 07836 U.S.A.
(72)**Name of Inventor :**
1)SCAGGS Michael J.

(57) Abstract :
An apparatus that enables real time measurement of the spatial profile circularity centroid astigmatism and M2 values of a laser beam generated by a high power laser beam. The apparatus employs the optics used in a process application including a focus lens and cover glass. An attenuation module includes a pair of high reflecting mirror plates disposed in parallel spaced apart relation to one another at a common angle of incidence to the laser beam. A beam dump is positioned out of a path of travel of the laser beam and in receiving relation to light reflected by the first and second mirrors. A camera detects spots of light that pass through the first and second mirrors. A high power attenuator formed by a highly reflective mirror pair is positioned between the source and the attenuation module. A second embodiment includes a single mirror plate having highly reflective surfaces.

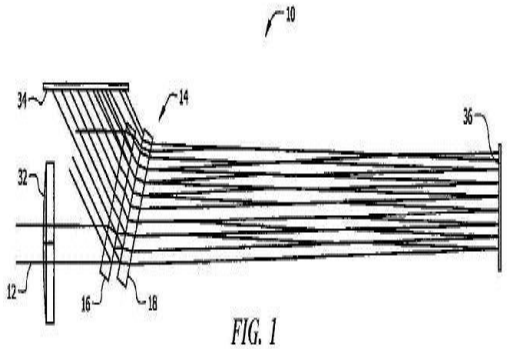

FIG. 1

No. of Pages : 18 No. of Claims : 3

(12) PATENT APPLICATION PUBLICATION
(19) INDIA
(22) Date of filing of Application :20/11/2012
(21) Application No.9780/CHENP/2012 A
(43) Publication Date : 25/12/2015

(54) Title of the invention : A SOLAR ENERGY COLLECTOR SYSTEM •

(51) International classification :F24J
(31) Priority Document No :2010901704
(32) Priority Date :22/04/2010
(33) Name of priority country :Australia
(86) International Application No :PCT/AU2011/000460
Filing Date :21/04/2011
(87) International Publication No :WO/2011/130794
(61) Patent of Addition to Application Number :NA
Filing Date :NA
(62) Divisional to Application Number :NA
Filing Date :NA

(71)**Name of Applicant :**
1)POWELL Trevor
Address of Applicant :567 Mount Glorious Road Highvale Queensland 4520 Australia Australia
(72)**Name of Inventor :**
1)POWELL Trevor

(57) Abstract :
A solar energy collector system (32) has a fixed array (34) of reflectors (40) extending in parallel rows, and a common focal receiver (36) located above the fixed array (34) and extending parallel to the rows of reflectors (40). Incident solar radiation from all of the reflectors is reflected upon the receiver (36) which includes a heat absorbing medium adapted to absorb heat from the reflected radiation. There is an elevated support structure (38) for the fixed array (34) of reflectors and the receiver (36). The support structure (38) orients each row of reflectors at a respective fixed angle relative to the support structure. The support structure (38) is pivotally mounted to an upright elevation assembly (77) to allow controlled rotation of the fixed array (34) and receiver (36) simultaneously about a pivotal axis (39) extending parallel to the rows of reflectors (40) so as to track the movement of the sun.

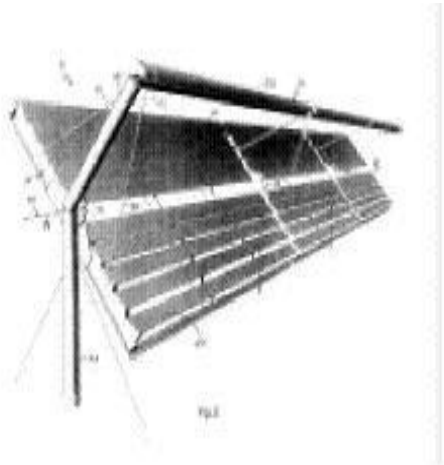

No. of Pages : 29 No. of Claims : 11

(12) PATENT APPLICATION PUBLICATION
(19) INDIA
(22) Date of filing of Application :20/11/2012

(21) Application No.9784/CHENP/2012 A
(43) Publication Date : 25/12/2015

(54) Title of the invention : ENGINE EMISSION CONTROL STRATEGY FOR SMOKE AND NOX

(51) International classification :F02M25/07
(31) Priority Document No :NA
(32) Priority Date :NA
(33) Name of priority country :NA
(86) International Application No :PCT/US2010/032014
Filing Date :22/04/2010
(87) International Publication No :WO 2011/133153
(61) Patent of Addition to Application Number :NA
Filing Date :NA
(62) Divisional to Application Number :NA
Filing Date :NA

(71)**Name of Applicant :**
1)INTERNATIONAL ENGINE INTELLECTUAL PROPERTY COMPANY LLC
Address of Applicant :4201 Winfield Road Warrenville Illinois 60555 U.S.A.
(72)**Name of Inventor :**
1)SEIBERLICH Matthew Joseph
2)MCNULTY Michael James

(57) Abstract :
An engine control system (32) apportions smoke and NOx in engine out exhaust gas by a strategy (38) that corrects a target percentage for fresh air and a target percentage for exhaust gas to re calculate a set point for fresh air mass flow. The target percentage for fresh air mass flow is calculated as a function of engine speed (N) and an engine output torque request (TQI_DRIV).

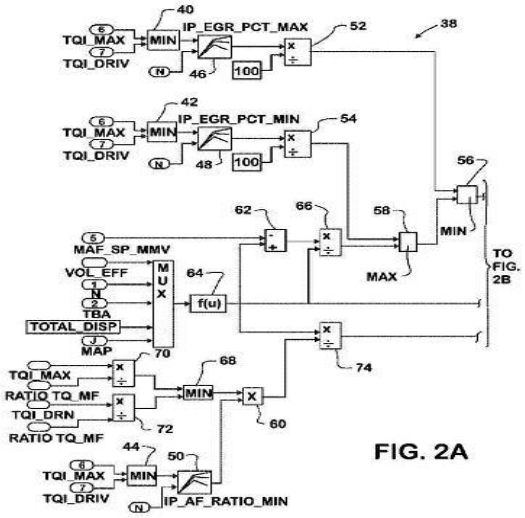

FIG. 2A

No. of Pages : 25 No. of Claims : 18

(12) PATENT APPLICATION PUBLICATION
(19) INDIA
(22) Date of filing of Application :22/10/2013
(21) Application No.8494/CHENP/2013 A
(43) Publication Date : 25/12/2015

(54) Title of the invention : 3-STROKE/6-STROKE ROCKET JET ENGINE

(51) International classification :F01C1/22,F01C1/24,F01C1/36
(31) Priority Document No :2011065097
(32) Priority Date :23/03/2011
(33) Name of priority country :Japan
(86) International Application No :PCT/JP2012/057107
Filing Date :21/03/2012
(87) International Publication No :WO 2012/128267
(61) Patent of Addition to Application Number :NA
Filing Date :NA
(62) Divisional to Application Number :NA
Filing Date :NA

(71)**Name of Applicant :**
1)ISHII Ryuji
Address of Applicant :425 ENA RD. PH 2A HONOLULU Hawaii 96815 U.S.A.
(72)**Name of Inventor :**
1)ISHII Takeshi

(57) Abstract :
The present invention provides an engine pump that has: a housing (1) having a cylinder space; an output shaft unit (2) formed with one or more pistons (4) capable of constant velocity true circle rotation within the cylinder space a ring disk (5) and an output disk (3); a rotor (7) capable of constant velocity true circle rotation at a fixed relative rotational velocity with respect to the rotation of the pistons (4); a rotor guide (8) which is concentric with the output shaft unit (2) governs the inside of the aforementioned cylinder has a retaining part that makes concave contact with the rotor (7) and has an outer circumferential surface that makes surface contact with the pistons (4) and supports the rotor (7) and the center of the output shaft unit (2) which rotates at constant velocity in a true circle; and a drive means that actuates the pistons (4). A portion of the inner circumferential wall surface of the cylinder of the housing (1) has a notch part (14) that is used for sealing and makes surface contact with a portion of the outer circumferential surface of the rotor (7).

No. of Pages : 133 No. of Claims : 12

(12) PATENT APPLICATION PUBLICATION
(21) Application No.9442/CHENP/2012 A
(19) INDIA
(22) Date of filing of Application :06/11/2012
(43) Publication Date : 25/12/2015

(54) Title of the invention : CUSHION FOR A FOLDING HANDHELD ELECTRONIC DEVICE AND WATERPROOFING STRUCTURE FOR A FOLDING HANDHELD ELECTRONIC DEVICE

(51) International classification :H04M1/02,H05K5/02,H05K5/06
(31) Priority Document No :2010-108010
(32) Priority Date :10/05/2010
(33) Name of priority country :Japan
(86) International Application No :PCT/JP2011/002496
Filing Date :28/04/2011
(87) International Publication No :WO 2011/142098 A1
(61) Patent of Addition to Application Number :NA
Filing Date :NA
(62) Divisional to Application Number :NA
Filing Date :NA

(71)**Name of Applicant :**
1)NEC Corporation
Address of Applicant :7 1 Shiba 5 chome Minato ku Tokyo 1088001 Japan
(72)**Name of Inventor :**
1)KUMAGAI Keiichirou

(57) Abstract :
The disclosed cushion for a folding handheld electronic device can prevent increases in manufacturing cost prevent water from getting inside case units and prevent the case units from becoming damaged during folding. Said cushion (107) is provided with: a protruding part (107a) that is provided on one case unit (110) and protrudes from one surface contacting the other case unit when the folding handheld electronic device is closed; and a body part (107b) that is in contact with and sandwiched between the outer surface of a frame component member (101) a side surface of which is part of a frame for the aforementioned one surface and the inner surface of a back component member (102) which covers the back surface of the aforementioned one case unit said back surface being the surface opposite the aforementioned one surface.

No. of Pages : 24 No. of Claims : 7

(12) PATENT APPLICATION PUBLICATION
(19) INDIA
(22) Date of filing of Application :13/12/2013
(21) Application No.9996/CHENP/2013 A
(43) Publication Date : 25/12/2015

(54) Title of the invention : SYSTEM AND METHOD FOR PROCESSING A MEDICAL IMAGE

(51) International classification :G06T7/00
(31) Priority Document No :11171000.0
(32) Priority Date :22/06/2011
(33) Name of priority country :EPO
(86) International Application No :PCT/IB2012/053007
Filing Date :14/06/2012
(87) International Publication No :WO 2012/176100
(61) Patent of Addition to Application Number :NA
Filing Date :NA
(62) Divisional to Application Number :NA
Filing Date :NA

(71)**Name of Applicant :**
1)KONINKLIJKE PHILIPS N.V.
Address of Applicant :High Tech Campus 5 NL 5656 AE Eindhoven Netherlands
(72)**Name of Inventor :**
1)BUELOW Thomas
2)BERGTHOLDT Martin
3)MEETZ Kirsten
4)CARLSEN Ingwer Curt
5)WIEMKER Rafael

(57) Abstract :
A system (100) for processing a medical image (102) the system being arranged for establishing a region of interest 104 in the medical image and the system comprising segmentation means (120) for applying a plurality of different segmentation methods (124) to the region of interest for obtaining an associated plurality of segmentation results (122) visualization means (140) for simultaneously displaying the plurality of segmentation results to a user and a user input (160) for receiving from the user a selection command (162) indicative of a selection of one of the plurality of segmentation results for establishing an associated one of the plurality of different segmentation methods as a selected segmentation method (164).

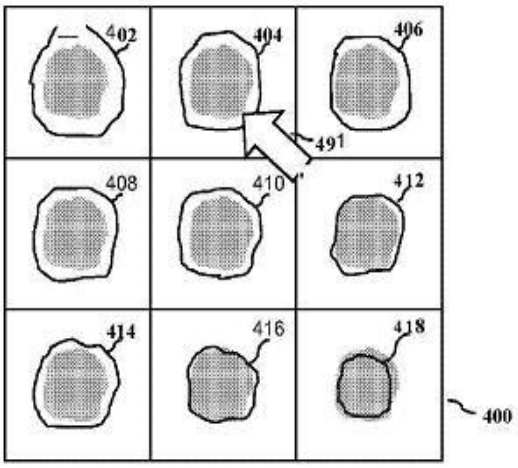

Fig. 5

No. of Pages : 26 No. of Claims : 15

(12) PATENT APPLICATION PUBLICATION
(21) Application No.6001/CHE/2013 A
(19) INDIA
(22) Date of filing of Application :20/12/2013
(43) Publication Date : 25/12/2015

(54) Title of the invention : NOVEL CRYSTALLINE FORM OF DOLUTEGRAVIR SODIUM

(51) International classification :C07D
(31) Priority Document No :NA
(32) Priority Date :NA
(33) Name of priority country :NA
(86) International Application No :NA
Filing Date :NA
(87) International Publication No : NA
(61) Patent of Addition to Application Number :NA
Filing Date :NA
(62) Divisional to Application Number :NA
Filing Date :NA

(71)**Name of Applicant :**
1)MYLAN LABORATORIES LTD
Address of Applicant :PLOT NO 564/A/22, ROAD NO 92, JUBILEE HILLS, HYDERABAD - 500 033 Andhra Pradesh India
(72)**Name of Inventor :**
1)JETTI, RAMAKOTESWARA RAO
2)BEERAVELLY, SATISH
3)NADELLA, MADHU MURTHY
4)BALUSU, PHANI KUMAR

(57) Abstract :
The present disclosure relates to crystalline dolutegravir sodium Form-M1, which is an N-methyl-2-pyrrolidone solvate, and a process for the preparation thereof.

No. of Pages : 10 No. of Claims : 10

(12) PATENT APPLICATION PUBLICATION
(21) Application No.9681/CHENP/2012 A
(19) INDIA
(22) Date of filing of Application :16/11/2012
(43) Publication Date : 25/12/2015

(54) Title of the invention : INSTRUCTED POSITION DETERMINATION DEVICE OF TOUCH PANEL TOUCH PANEL DEVICE ELECTRONIC APPARATUS PROVIDED WITH SAME INSTRUCTED POSITION DETERMINATION METHOD OF TOUCH PANEL AND COMPUTER PROGRAM STORAGE MEDIUM

(51) International classification :G06F3/041
(31) Priority Document No :2010116879
(32) Priority Date :21/05/2010
(33) Name of priority country :Japan
(86) International Application No :PCT/JP2011/060688
Filing Date :27/04/2011
(87) International Publication No :WO 2011/145469
(61) Patent of Addition to Application Number :NA
Filing Date :NA
(62) Divisional to Application Number :NA
Filing Date :NA

(71)**Name of Applicant :**
1)NEC CORPORATION
Address of Applicant :7 1Shiba 5 chome Minato ku Tokyo 1088001 Japan
(72)**Name of Inventor :**
1)OBA Akitomo

(57) Abstract :
Disclosed is an instructed position determination device of a touch panel for preventing problems caused by statistical processing for calculating an instructed position of a touch panel by an instructing object. A displacement direction A is assumed to be a direction in which a current measurement position which has been acquired by measurement for detection at a predefined measurement timing related to a contact position at which an instructing object (8) is in contact with a touch panel (7) has been displaced with respect to a previous measurement position which had been acquired by the measurement at the previous measurement timing. A displacement direction B is assumed to be a direction in which the previous measurement position had been displaced with respect to the previous previous measurement position which had been acquired by the measurement at the previous previous measurement timing. If an intersection angle of the displacement direction A and the displacement direction B is less than or equal to a set angle Q a position by way of statistical processing on the basis of the plurality of measurement positions for which the measurement timings were different is determined as an position instructed by the instructing object at the current measurement timing. If the intersection angle is greater than the set angle Q the current measurement position is determined as the position instructed by the instructing object at the current measurement timing.

No. of Pages : 60 No. of Claims : 16

(12) PATENT APPLICATION PUBLICATION
(19) INDIA
(22) Date of filing of Application :16/11/2012
(21) Application No.9687/CHENP/2012 A
(43) Publication Date : 25/12/2015

(54) Title of the invention : TOOTHED BELT WHEEL

(51) International classification :F16H55/30,F16H55/17,F16H7/02
(31) Priority Document No :00780/10
(32) Priority Date :18/05/2010
(33) Name of priority country :Switzerland
(86) International Application No :PCT/IB2011/051964
Filing Date :04/05/2011
(87) International Publication No :WO 2011/145017
(61) Patent of Addition to Application Number :NA
Filing Date :NA
(62) Divisional to Application Number :NA
Filing Date :NA

(71)**Name of Applicant :**
1)HABERSTOCK ENGINEERING GMBH
Address of Applicant :Kadelburger Strasse 11 79787 Lauchringen Germany
(72)**Name of Inventor :**
1)SCHLUMPF Florian

(57) Abstract :
The present invention relates to a toothed belt wheel (1) in particular for bicycles or motorcycles for the transmission of torque from the crankshaft or engine shaft to the rear wheel. The toothed belt wheel (1) consists of individual disc shaped elements (2 3 4; 10 11 12) which are connected fixedly to one another to form a unit. That toothed belt disc (9) of the toothed belt wheel (1) which is intended for the engagement of a toothed belt is assembled from at least two elements (2 3; 10 11) namely a carrier disc (2) and one or more tooth discs (4). In addition a flanged disc (3) can also be arranged on the toothed belt disc (9).

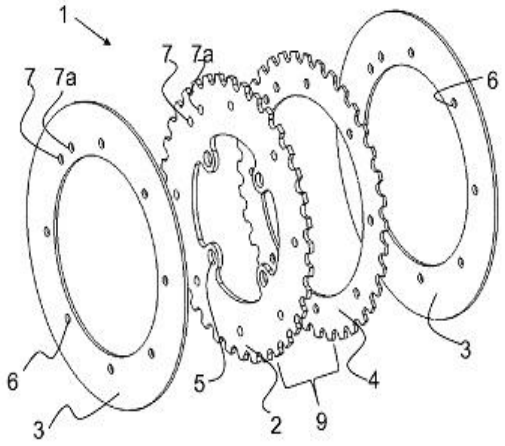

Fig. 1

No. of Pages : 14 No. of Claims : 8

(12) PATENT APPLICATION PUBLICATION
(19) INDIA
(22) Date of filing of Application :03/04/2014

(21) Application No.2523/CHENP/2014 A
(43) Publication Date : 25/12/2015

(54) Title of the invention : MECHANICAL AND ADHESIVE BASED RECLOSABLE FASTENERS

(51) International classification :B29D 5/00
(31) Priority Document No :61/544223
(32) Priority Date :06/10/2011
(33) Name of priority country :U.S.A.
(86) International Application No :PCT/US2012/058866
Filing Date :05/10/2012
(87) International Publication No :WO 2013/052742
(61) Patent of Addition to Application Number :NA
Filing Date :NA
(62) Divisional to Application Number :NA
Filing Date :NA

(71)**Name of Applicant :**
1)INTERCONTINENTAL GREAT BRANDS LLC
Address of Applicant :100 Deforest Avenue East Hanover New Jersey 07936 U.S.A.
(72)**Name of Inventor :**
1)ZERFAS Paul Anthony
2)SCAROLA Leonard
3)MASTERSON David Chris
4)ALTEN Mark R.
5)BOYCE Jeffrey James
6)HENRY Colleen Marie
7)JENKINS Kelly J.
8)MCGINNISS Vincent Daniel

(57) Abstract :
A hybrid reclosable fastener with both mechanical mating and adhesive reclosable mating elements and a method of forming the hybrid reclosable fastener is described herein. Mechanical mating elements include mating portions having cooperating coupling parts configured to provide mechanical mating along with adhesive mating elements including an adhesive material formed on the cooperating coupling parts configured to provide an adhesive mating.

FIG. 1

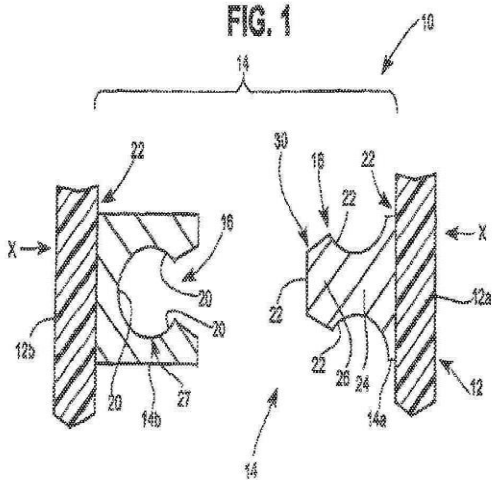

No. of Pages : 86 No. of Claims : 37

(12) PATENT APPLICATION PUBLICATION
(19) INDIA
(22) Date of filing of Application :06/11/2012

(21) Application No.9450/CHENP/2012 A
(43) Publication Date : 25/12/2015

(54) Title of the invention : CLEANING PRODUCT

(51) International classification :D06F39/02,C11D11/00
(31) Priority Document No :1006076.2
(32) Priority Date :12/04/2010
(33) Name of priority country :U.K.
(86) International Application No :PCT/GB2011/050718
Filing Date :12/04/2011
(87) International Publication No :WO 2011/128676 A1
(61) Patent of Addition to Application Number :NA
Filing Date :NA
(62) Divisional to Application Number :NA
Filing Date :NA

(71)**Name of Applicant :**
1)RECKITT & COLMAN (OVERSEAS) LIMITED
Address of Applicant :103 105 Bath Road Slough Berkshire SL1 3UH U.K.
(72)**Name of Inventor :**
1)BOLTON Philip
2)DI BONO Giuseppe
3)WALKER Clare

(57) Abstract :
A detergent dispensing cartridge for use in a washing machine wherein the washing machine is suitable for cleaning a soiled substrate and the treatment of the moistened substrate is performed using a formulation comprising a multiplicity of polymeric particles said formulation is free of organic solvents.

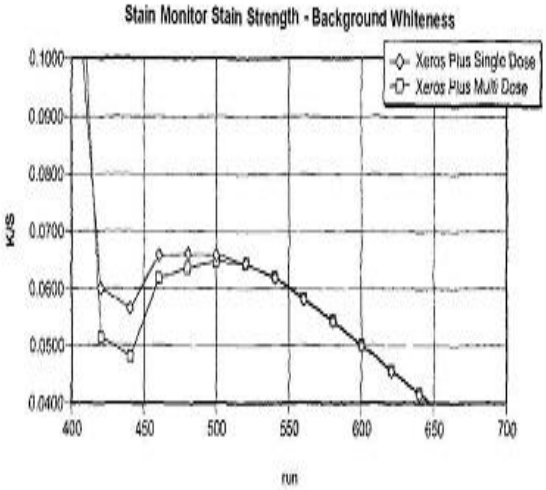

FIG. 1

No. of Pages : 42 No. of Claims : 10

(12) PATENT APPLICATION PUBLICATION
(19) INDIA
(22) Date of filing of Application :29/10/2012
(21) Application No.9219/CHENP/2012 A
(43) Publication Date : 25/12/2015

(54) Title of the invention : FUEL INJECTION VALVE

(51) International classification :F02M45/08, F02M63/02
(31) Priority Document No :.
(32) Priority Date :29/10/2012
(33) Name of priority country :
(86) International Application No :PCT/JP2007/56441
Filing Date :27/03/2007
(87) International Publication No :WO/2008/117459
(61) Patent of Addition to Application Number :NA
Filing Date :NA
(62) Divisional to Application Number :2176/CHENP/2008
Filed on :27/03/2007

(71)**Name of Applicant :**
1)MITSUBISHI ELECTRIC CORPORATION
Address of Applicant :7-3, MARUNOUCHI 2-CHOME, CHIYODA-KU, TOKYO 100-8310 Japan
(72)**Name of Inventor :**
1)HASHII, NAOYA
2)NAKANO, KEISHI
3)MUNEZANE, TSUYOSHI
4)YOSHIMURA, ATSUSHI
5)MIYAKI, MANABU

(57) Abstract :
This invention serves to suppress the deterioration of oil tightness of a valve after welding without any change in the direction of fuel injection even with deformation of a convex portion after welding of an injection opening plate to a valve seat, as well as without any variation in the direction of fuel injection due to welding variation. In this invention, in a fuel injection valve which has a valve body for opening and closing a valve seat, and receives an operation signal from a control unit to operate the valve body so that fuel is injected from a plurality of injection holes formed in an injection hole plate welded through a welded portion to a downstream side of the valve seat while passing through a gap between the valve body and the valve seat, said injection hole plate is formed at its central portion with a convex portion which is substantially axisymmetric with respect to a valve seat axis and which has a circular-arc shaped cross section, and said welded portion is also substantially axisymmetric with respect to said valve seat axis. In addition, inlet portions of said injection holes are disposed in an injection hole arrangement surface diametrically outside of said convex portion and diametrically inside of a valve seat opening inner wall which is a minimum inside diameter of said valve seat, and said injection hole arrangement surface is coplanar with a surface having said welded portion. Fig. 2

FIG. 2

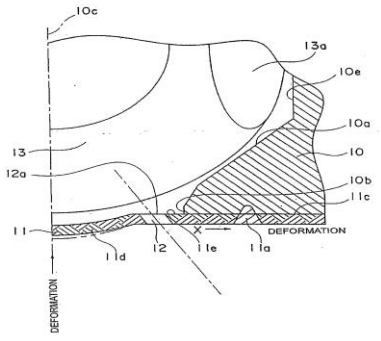

No. of Pages : 38 No. of Claims : 2

(12) PATENT APPLICATION PUBLICATION
(19) INDIA
(22) Date of filing of Application :19/11/2012
(21) Application No.9734/CHENP/2012 A
(43) Publication Date : 25/12/2015

(54) Title of the invention : TRAIN SPEED CONTROL APPARATUS AND TRAIN SPEED CONTROL METHOD

(51) International classification :B60L15/40
(31) Priority Document No :NA
(32) Priority Date :NA
(33) Name of priority country :NA
(86) International Application No :PCT/JP2010/003055
Filing Date :28/04/2010
(87) International Publication No :WO 2011/135626 A1
(61) Patent of Addition to Application Number :NA
Filing Date :NA
(62) Divisional to Application Number :NA
Filing Date :NA

(71)**Name of Applicant :**
1)Mitsubishi Electric Corporation
Address of Applicant :7 3Marunouchi 2 chome Chiyoda ku Tokyo 1008310 Japan
(72)**Name of Inventor :**
1)TAKAGI Masamichi

(57) Abstract :
[Problem] To stop a train at a desired stopping target without outputting more braking force than is necessary by outputting an appropriate braking instruction in accordance with the travelling state of the train. [Solution] An on train calculation apparatus (6) evaluates whether a train (1) has a current state acceleration (113) or not using an acceleration estimation unit (18) estimates the current state acceleration (113) on the basis of vehicle information (107) obtained from a vehicle performance management unit (14) and creates with a pattern calculation unit (15) a braking instruction pattern (108) assuming that the train (1) is running at the current state acceleration (113) when the train (1) is in an accelerating state and creates a braking instruction pattern (108) assuming that there is no acceleration of a carriage of the train (1) by a propelling control of the carriage itself when the train (1) is in a coasting state.

FIG.4

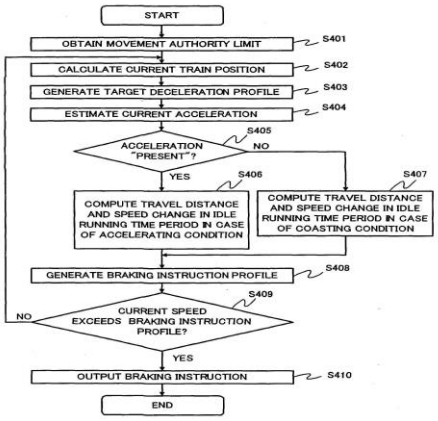

No. of Pages : 38 No. of Claims : 13

(12) PATENT APPLICATION PUBLICATION
(19) INDIA
(22) Date of filing of Application :07/11/2012

(21) Application No.9473/CHENP/2012 A
(43) Publication Date : 25/12/2015

(54) Title of the invention : HIGH MOLECULAR WEIGHT ZWITTERION CONTAINING POLYMERS

(51) International classification :C08L77/02
(31) Priority Document No :61/324413
(32) Priority Date :15/04/2010
(33) Name of priority country :U.S.A.
(86) International Application No :PCT/US2011/032768
Filing Date :15/04/2011
(87) International Publication No :WO 2011/130694
(61) Patent of Addition to Application Number :NA
Filing Date :NA
(62) Divisional to Application Number :NA
Filing Date :NA

(71)**Name of Applicant :**
1)OLIGASIS
Address of Applicant :3350 West Bayshore Road Palo Alto California 94303 U.S.A.
(72)**Name of Inventor :**
1)CHARLES Stephen A.
2)PERLROTH Victor D.
3)BENOIT Didier G.
4)CLIZBE Lane A.
5)TO Wayne
6)ZADIK Linda J.
7)PRATT Jeanne M.

(57) Abstract :
The present invention provides multi armed high MW polymers containing hydrophilic groups and one or more functional agents and methods of preparing such polymers.

Figure 1.

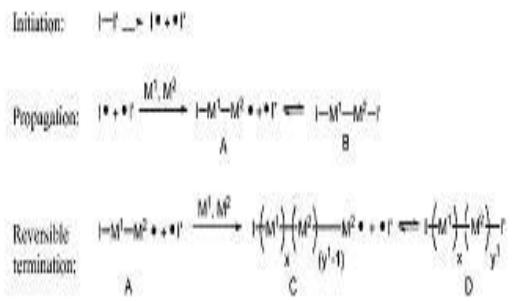

No. of Pages : 200 No. of Claims : 30

(12) PATENT APPLICATION PUBLICATION
(21) Application No.9474/CHENP/2012 A
(19) INDIA
(22) Date of filing of Application :07/11/2012
(43) Publication Date : 25/12/2015

(54) Title of the invention : DEVICE AND METHOD FOR DETERMINING A BIOLOGICAL CHEMICAL AND/OR PHYSICAL PARAMETER IN A LIVING BIOLOGICAL TISSUE

(51) International classification	:A61B5/1455,A61B5/145,G01N21/25
(31) Priority Document No	:10 2010 014 775.3
(32) Priority Date	:13/04/2010
(33) Name of priority country	:Germany
(86) International Application No	:PCT/EP2011/054977
Filing Date	:31/03/2011
(87) International Publication No	:WO 2011/128209
(61) Patent of Addition to Application Number	:NA
Filing Date	:NA
(62) Divisional to Application Number	:NA
Filing Date	:NA

(71)**Name of Applicant :**
1)VIVANTUM GMBH
Address of Applicant :Corneliusstrasse 10 12247 Berlin Germany
(72)**Name of Inventor :**
1)MLLER Arno
2)UTZ Heinz Peter

(57) Abstract :
iiikkkThe invention relates to a device for determining biological chemical and/or physical parameters in living biological tissue comprising an energy supply unit a laser operating unit with at least one laser source directed at the biological tissue at least one sensor unit for detecting the light scattered back and/or absorbed by the biological tissue a control unit a storing and processing unit and an interface for an external data processing unit. The method according to the invention includes execution of a calibrating phase for ascertaining a reference set (R) of reference vectors (R) in each case involving independently ascertaining a parameter (BZ) radiating unpolarized laser light onto the biological tissue and registering a measured value vector (M) from a series of optical measured variables and executing an interpolation phase for ascertaining an interpolation set (I) of interpolation vectors (I) in each case involving radiating unpolarized laser light onto the biological tissue and registering a measured value vector (M) from a back scattered light intensity with a subsequent determination of an interpolated parameter (BK) from the reference set (R).

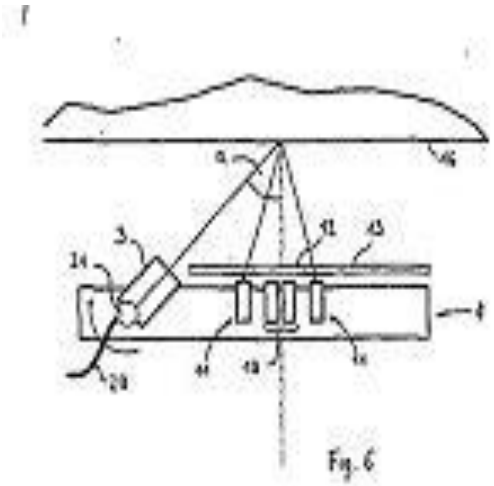

No. of Pages : 52 No. of Claims : 18

(12) PATENT APPLICATION PUBLICATION
(19) INDIA
(22) Date of filing of Application :19/11/2012
(21) Application No.9744/CHENP/2012 A
(43) Publication Date : 25/12/2015

(54) Title of the invention : PORTABLE INFORMATION PROCESSING TERMINAL

(51) International classification :G06F3/02,G06F3/023,G06F3/033
(31) Priority Document No :2010116116
(32) Priority Date :20/05/2010
(33) Name of priority country :Japan
(86) International Application No :PCT/JP2011/002667
Filing Date :13/05/2011
(87) International Publication No :WO 2011/145304
(61) Patent of Addition to Application Number :NA
Filing Date :NA
(62) Divisional to Application Number :NA
Filing Date :NA

(71)**Name of Applicant :**
1)NEC Corporation
Address of Applicant :7 1 Shiba 5 chome Minato ku Tokyo 1088001 Japan
(72)**Name of Inventor :**
1)OGA Toshiyuki

(57) Abstract :
The disclosed portable information processing terminal (200) is provided with: a display device (201) that is formed on a predetermined surface of the casing of the portable information processing terminal (200); a plurality of operation keys (202) disposed on the surface of the abovementioned casing that is positioned on the reverse side from the surface to which the abovementioned display device (201) is formed; and a control device (203) that detects the operational state inputted to the abovementioned operation keys (202) and executes a process in response to said detected operational state. When a continuous operation on the plurality of abovementioned operation keys (202) is detected the abovementioned control device (203) receives the input of information indicating a predetermined direction corresponding to the continuous operation of said plurality of operation keys (202).

No. of Pages : 261 No. of Claims : 45

(12) PATENT APPLICATION PUBLICATION
(21) Application No.9764/CHENP/2012 A
(19) INDIA
(22) Date of filing of Application :20/11/2012
(43) Publication Date : 25/12/2015

(54) Title of the invention : CONFIGURING SURROGATE MEMORY ACCESSING AGENTS USING INSTRUCTIONS FOR TRANSLATING AND STORING DATA VALUES •

(51) International classification :G06F 9/34
(31) Priority Document No :12/777,324
(32) Priority Date :11/05/2010
(33) Name of priority country :U.S.A.
(86) International Application No :PCT/US2011/034095
Filing Date :27/04/2011
(87) International Publication No :WO/2011/142967
(61) Patent of Addition to Application Number :NA
Filing Date :NA
(62) Divisional to Application Number :NA
Filing Date :NA

(71)**Name of Applicant :**
1)QUALCOMM INCORPORATED
Address of Applicant :ATTN: International IP Administration 5775 Morehouse Drive San Diego California 92121-1714 U.S.A.
(72)**Name of Inventor :**
1)THOMAS ANDREW SARTORIUS

(57) Abstract :
(EN)Configuring a surrogate memory accessing agent using an instruction for translating and storing a data value is described. In one embodiment, the instruction is received that includes a first operand specifying a data value to be translated and a second operand specifying a virtual address associated with a location of a surrogate memory accessing agent register in which to store the data value. The data value can be translated to a first physical address. The virtual address can be translated to a second physical address. The first physical address is stored in the surrogate memory accessing agent register based on the second physical address

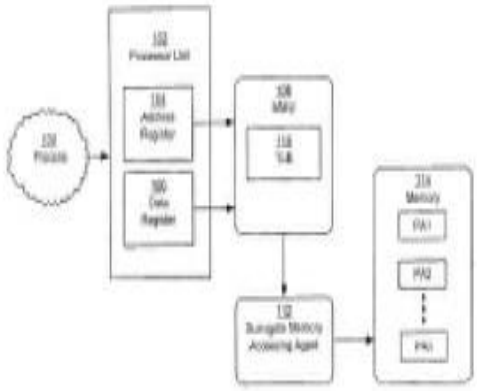

FIG. 1

No. of Pages : 40 No. of Claims : 20

(12) PATENT APPLICATION PUBLICATION
(19) INDIA
(22) Date of filing of Application :30/10/2013
(21) Application No.8729/CHENP/2013 A
(43) Publication Date : 25/12/2015

(54) Title of the invention : NITROGENATED HETEROCYCLIC COMPOUND AND AGRICULTURAL OR HORTICULTURAL FUNGICIDE

(51) International classification	:C07D241/52,A01N43/42,A01N43/60
(31) Priority Document No	:2011113174
(32) Priority Date	:20/05/2011
(33) Name of priority country	:Japan
(86) International Application No	:PCT/JP2012/062618
Filing Date	:17/05/2012
(87) International Publication No	:WO 2012/161071
(61) Patent of Addition to Application Number	:NA
Filing Date	:NA
(62) Divisional to Application Number	:NA
Filing Date	:NA

(71)**Name of Applicant :**
1)Nippon Soda Co. Ltd.
Address of Applicant :2 1 Ohtemachi 2 chome Chiyoda ku Tokyo 1008165 Japan
(72)**Name of Inventor :**
1)SHIBAYAMA Kotaro
2)KUWAHARA Raito
3)SATO Motoaki
4)NISHIMURA Satoshi
5)SHIINOKI Yasuyuki
6)YOKOYAMA Masahiro
7)KITAMURA Juri

(57) Abstract :
12313121414An agricultural or horticultural fungicide comprises as an active ingredient at least one compound selected from a nitrogenated heterocyclic compound represented by formula (I) (wherein R represents a group represented by CRRR or a cyano group; R to R independently represent a hydrogen atom an alkyl group a hydroxy group or the like; X represents a halogeno group or the like; m represents an integer of 0 5; X represents a halogeno group or the like; n represents an integer of 0 3; B represents a carbon atom or a nitrogen atom; D represents a 5 to 7 membered hydrocarbon ring; and A to A independently represent a carbon atom or a nitrogen atom wherein all of A to A cannot represent carbon atoms when B represents a carbon atom) and salts thereof.

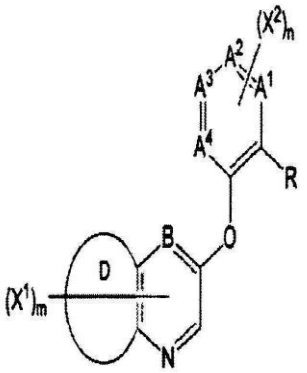

(I)

No. of Pages : 146 No. of Claims : 7

(12) PATENT APPLICATION PUBLICATION
(21) Application No.9225/CHENP/2012 A
(19) INDIA
(22) Date of filing of Application :29/10/2012
(43) Publication Date : 25/12/2015

(54) Title of the invention : SYSTEM AND METHOD FOR UPLINK CONTROL INFORMATION TRANSMISSION IN CARRIER AGGREGATION

(51) International classification :H04L5/00
(31) Priority Document No :12/771,281
(32) Priority Date :30/04/2010
(33) Name of priority country :U.S.A.
(86) International Application No :PCT/US2011/034803
Filing Date :02/05/2011
(87) International Publication No : NA
(61) Patent of Addition to Application Number :NA
Filing Date :NA
(62) Divisional to Application Number :NA
Filing Date :NA

(71)**Name of Applicant :**
1)Research In Motion Limited
Address of Applicant :295 Phillip Street Waterloo Ontario N2L 3W8 Canada Canada
(72)**Name of Inventor :**
1)HEO Youn Hyoung
2)FONG Mo-Han
3)EARNSHAW Andrew Mark
4)XU Hua
5)CAI Zhijun

(57) Abstract :
A method for communicating uplink control information to a base station using a user equipment is presented. The method includes identifying component carriers on the user equipment scheduled for Physical Uplink Shared CHannel (PUSCH) transmissions and identifying at least one first ranking for each of the component carriers for transmission of uplink control information. Each first ranking is at least partially determined by whether the component carrier is configured for delay-sensitive transmissions. The method includes using the at least one first ranking to select a first component carrier for transmission of uplink control information and encoding uplink control information into the first component carrier for transmission to the base station.

No. of Pages : 54 No. of Claims : 30

(12) PATENT APPLICATION PUBLICATION
(19) INDIA
(22) Date of filing of Application :07/11/2012
(21) Application No.9472/CHENP/2012 A
(43) Publication Date : 25/12/2015

(54) Title of the invention : FASTENING DEVICE ON THE UNDERBODY OF A MOTOR VEHICLE

(51) International classification :B60K20/04,F16H59/02
(31) Priority Document No :10 2010 019.928.1
(32) Priority Date :08/05/2010
(33) Name of priority country :Germany
(86) International Application No :PCT/EP2011/001240
Filing Date :14/03/2011
(87) International Publication No :WO 2011/141083
(61) Patent of Addition to Application Number :NA
Filing Date :NA
(62) Divisional to Application Number :NA
Filing Date :NA

(71)**Name of Applicant :**
1)VOLKSWAGEN AKTIENGESELLSCHAFT
Address of Applicant :38436 Wolfsburg Germany
(72)**Name of Inventor :**
1)KESSLER Jrn
2)REMMERT Martin

(57) Abstract :
The invention relates to a fastening device on the underbody (1) of a motor vehicle by means of which a shifting device (3) can be fastened to the underbody (1) wherein the shifting device (3) has a shift lever (4) that protrudes into the vehicle interior and the shifting device is covered by a center console (28) which can be rigidly connected to the underbody (1) by means of at least one retaining element (19 20). According to the invention a damping cap (7) that covers the shifting device (3) and that has a passage for the shift lever (4) is provided and the retaining element (19 20) can be fastened to the underbody (1) with the damping cap (7) there between.

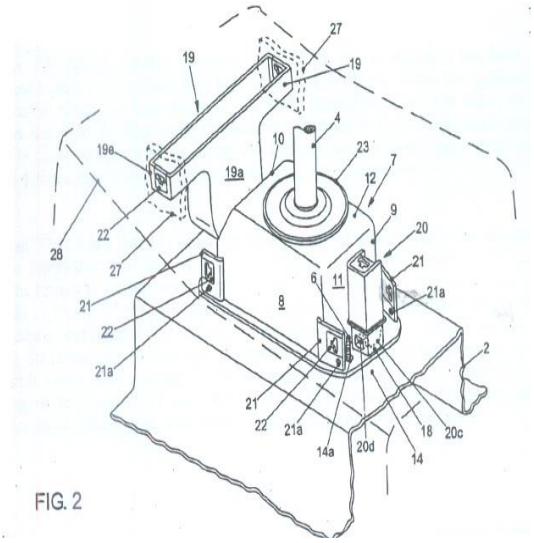

FIG. 2

No. of Pages : 21 No. of Claims : 11

(12) PATENT APPLICATION PUBLICATION
(19) INDIA
(22) Date of filing of Application :30/10/2012
(21) Application No.9239/CHENP/2012 A
(43) Publication Date : 25/12/2015

(54) Title of the invention : TURBIDITY DETECTING DEVICE

(51) International classification :G01N21/49,G01N15/06
(31) Priority Document No :2010106453
(32) Priority Date :06/05/2010
(33) Name of priority country :Japan
(86) International Application No :PCT/JP2011/059595
Filing Date :19/04/2011
(87) International Publication No :WO 2011/138896
(61) Patent of Addition to Application Number :NA
Filing Date :NA
(62) Divisional to Application Number :NA
Filing Date :NA

(71)**Name of Applicant :**
1)Sharp Kabushiki Kaisha
Address of Applicant :22 22 Nagaike cho Abeno ku Osaka shi Osaka 5458522 Japan
(72)**Name of Inventor :**
1)KOYANAGI Tomohiro

(57) Abstract :
Disclosed is a turbidity detector which can detect a low level of turbidity or a vary small change in turbidity. Specifically disclosed is a turbidity sensor (1) comprising: a container (110); a light emitting unit (121) which can eject light that has permeated from the outside of the container (110) through a first wall (111) onto a second wall (112); and a scattered light receiving unit (122) which can receive light that has been ejected from the light emitting unit (121) and has penetrated through the second wall (112). The incident angle (A) at which the light ejected from the light emitting unit (121) enters the first wall (111) the angle (D) between the inner surface of the first wall (111) and the inner surface of the second wall (112) the refractive index (n) of a liquid (140) for the light ejected from the light emitting unit (121) the refractive index (m) of a material constituting the first wall (111) and the second wall (112) the angle (x) between the inner surface and the outer surface of the first wall (111) and the angle (y) between the inner surface and the outer surface of the second wall (112) fulfill a relationship represented by numerical formula (1).

No. of Pages : 68 No. of Claims : 8

(12) PATENT APPLICATION PUBLICATION
(21) Application No.9758/CHENP/2012 A
(19) INDIA
(22) Date of filing of Application :19/11/2012
(43) Publication Date : 25/12/2015

(54) Title of the invention : NOVEL SELF-ASSEMBLING PEPTIDES AND THEIR USE IN THE FORMAIION OF HYDROGELS

(51) International classification	:C07K7/06, C07K7/08, C07K14/00	(71)**Name of Applicant :** **1)UNIVERSITA'DEGLI STUDI DI MILANO BICOCCA** Address of Applicant :Piazza dell' Ateneo Nuovo, 1,I-2026, Milano Italy Italy
(31) Priority Document No	:PCT/IB2010/051700	
(32) Priority Date	:07/06/2010	(72)**Name of Inventor :** **1)VESCOVI, Angelo Luigi**
(33) Name of priority country	:Argentina	
(86) International Application No	:PCT/EP2011/056237	
Filing Date	:19/04/2011	
(87) International Publication No	:WO 2011/131671 A1	
(61) Patent of Addition to Application Number	:NA	
Filing Date	:NA	
(62) Divisional to Application Number	:NA	
Filing Date	:NA	

(57) Abstract :
There is described a group of novel self-assembling peptides (SAPs), comprising biotinylated and unbiotinylated sequences, hybrid peptideTpeptoid sequences, branched sequences for a total of 48 tested motifs, showing a heterogeneous ensem¬ble of spontaneously self-assembled structures at the nano- and micrpscale, ranging from short tabular fibers to twisted ribbons, nanotubes and hierarchical self-assembled micrometer-long sheets. Specifically, the SAPs according to the present invention which initially spontaneous assemble, surprisingly form stable solid scaffolds upon exposure to neutral pH buffer. Further these SAPs allow adhesion, proliferation and differentiaton of murine and human neural stem cells and have self-healing propensity. They also did not exert toxic effects in the central nervous system, can stop bleeding and foster nervous regeneration. Therefore, the SAPs according to the present invention are improved biomaterials, a highly valid and useful alternative which may replace the known SAPs, thus overcoming the disadvantages related thereto.

No. of Pages : 80 No. of Claims : 33

(12) PATENT APPLICATION PUBLICATION
(19) INDIA
(22) Date of filing of Application :31/10/2012
(21) Application No.9271/CHENP/2012 A
(43) Publication Date : 25/12/2015

(54) Title of the invention : METHOD FOR CONTROL OF PLANTHOPPERS

(51) International classification :A01N43/38,A01M1/20,A01N25/00
(31) Priority Document No :2010-106177
(32) Priority Date :06/05/2010
(33) Name of priority country :Japan
(86) International Application No :PCT/JP2011/060614
Filing Date :26/04/2011
(87) International Publication No :WO 2011/138968 A1
(61) Patent of Addition to Application Number :NA
Filing Date :NA
(62) Divisional to Application Number :NA
Filing Date :NA

(71)**Name of Applicant :**
1)SUMITOMO CHEMICAL COMPANY LIMITED
Address of Applicant :27 1 Shinkawa 2 chome Chuo ku Tokyo 1048260 Japan
(72)**Name of Inventor :**
1)SAKAMOTO Emiko
2)IWATA Atsushi

(57) Abstract :
A method for controlling planthoppers, which comprises a step of directly applying an effective amount of spirotetramat to a rice paddy in which a rice plant is growing.

No. of Pages : 17 No. of Claims : 6

(12) PATENT APPLICATION PUBLICATION
(19) INDIA
(22) Date of filing of Application :31/10/2012
(21) Application No.9272/CHENP/2012 A
(43) Publication Date : 25/12/2015

(54) Title of the invention : SOLD STATE ELECTROLYTES HAVING HIGH LITHIUM ION CONDUCTION

(51) International classification :H01M10/0562,H01M10/052,H01M10/0525
(31) Priority Document No :12/798510
(32) Priority Date :06/04/2010
(33) Name of priority country :U.S.A.
(86) International Application No :PCT/US2011/000599
Filing Date :04/04/2011
(87) International Publication No :WO 2011/126558
(61) Patent of Addition to Application Number :NA
Filing Date :NA
(62) Divisional to Application Number :NA
Filing Date :NA

(71)**Name of Applicant :**
1)OLADEJI Isaiah O.
Address of Applicant :653 West Michigan Street Orlando FL 32805 U.S.A.
(72)**Name of Inventor :**
1)OLADEJI Isaiah O.

(57) Abstract :
A method for making ion conducting films includes the use of primary inorganic chemicals which are preferably water soluble; formulating the solution with appropriate solvent preferably deionized water; and spray depositing the solid electrolyte matrix on a heated substrate preferably at 100 to 400°C using a spray deposition system. The deposition step is then followed by lithiation or addition of lithium then thermal processing at temperatures preferably ranging between 100 and 500 °C to obtain a high lithium ion conducting inorganic solid state electrolyte. The electrolyte is incorporated into a lithium ion battery. The Li ion battery comprises: a cathode comprising a material selected from the group consisting of : LiMn204 LiMnNiCoA/02 LiCo02 LiNiCo02 and LiFeP04; an anode comprising a material selected from the group consisting of :Li Li alloys and metal oxide doped with Li; and a solid Li ion conducting electrolyte selected from the group consisting of: LixAlz. y [GanBl n] ySw (P04) c LixAlz y [GanBl n] ySw (B03) c LixGez ySiySw (P04) c and LixGe(z y) SiySw (B03) c where 4 < w < 20.3 < x < 10 0 <= y < 1.1 <= z < 4 0 <= n <= 1 and 0 < c < 20

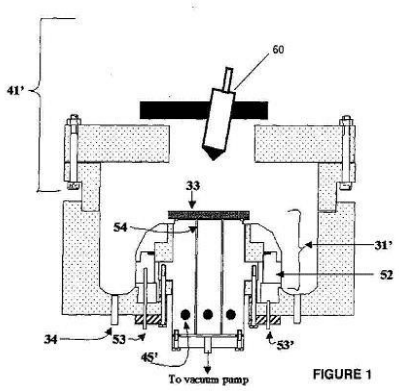

FIGURE 1

No. of Pages : 29 No. of Claims : 8

(12) PATENT APPLICATION PUBLICATION
(21) Application No.4914/CHE/2013 A
(19) INDIA
(22) Date of filing of Application :31/10/2013
(43) Publication Date : 25/12/2015

(54) Title of the invention : METHOD AND SYSTEM FOR CHARGING INFORMATION RECORDING IN DEVICE-TO-DEVICE (D2D) COMMUNICATION

(51) International classification :G08B
(31) Priority Document No :NA
(32) Priority Date :NA
(33) Name of priority country :NA
(86) International Application No :NA
Filing Date :NA
(87) International Publication No : NA
(61) Patent of Addition to Application Number :NA
Filing Date :NA
(62) Divisional to Application Number :NA
Filing Date :NA

(71)**Name of Applicant :**
1)Samsung R & D Institute India- Bangalore Private Limited
Address of Applicant :# 2870, Orion Building, Bagmane Constellation Business Park, Outer Ring Road, Doddanekundi Circle, Marathahalli Post, Bangalore Karnataka India
(72)**Name of Inventor :**
1)Rajavelsamy Rajadurai
2)Erik Guttman

(57) Abstract :
Embodiments herein provide a method and system of reporting a charging information for a Device-to-Device (D2D) communication established using a wireless network. The method includes recording by a first electronic device the charging information associated with a D2D communication session. The D2D communication session is established between the first electronic device and a second electronic device. Further, the method includes determining by the first electronic device whether the charging information meets charging criteria during the D2D communication session. The charging criteria are generated by a network node in a secure environment of the first electronic device. Further, the method includes reporting the charging information to the network node in the wireless network in response to determining that the charging information meets the charging criteria.

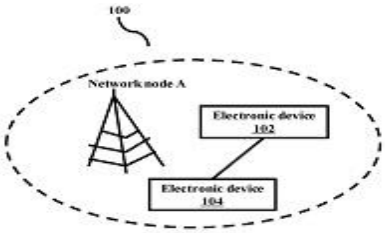

FIG. 1a

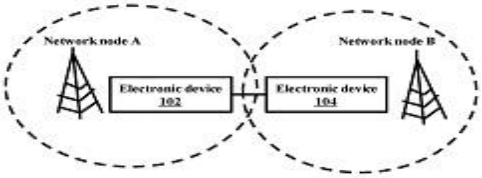

FIG. 1b

No. of Pages : 89 No. of Claims : 36

(12) PATENT APPLICATION PUBLICATION
(21) Application No.861/CHE/2014 A
(19) INDIA
(22) Date of filing of Application :21/02/2014
(43) Publication Date : 25/12/2015

(54) Title of the invention : METHOD OF CULTURING HIGH CELL DENSITY PBMCS

(51) International classification :C07K
(31) Priority Document No :NA
(32) Priority Date :NA
(33) Name of priority country :NA
(86) International Application No :NA
Filing Date :NA
(87) International Publication No : NA
(61) Patent of Addition to Application Number :NA
Filing Date :NA
(62) Divisional to Application Number :NA
Filing Date :NA

(71)**Name of Applicant :**
1)Dr. Reddy™s Laboratories Limited
Address of Applicant :V. R. Srinivas, Ph.D. Intellectual Property Management Biologics development Center Dr. Reddy™s Laboratories Limited Survey Nos. 47, Bachupalli, Qutubullapur, RR District, AP, India Andhra Pradesh India
(72)**Name of Inventor :**
1)Gaurav Rajendraprasad Mehta
2)C. Nirmala Raju

(57) Abstract :
The present invention relates to a method of attaining high cell density PBMCs that are viable for longer duration in culture. In particular the method involves culturing the cells in lymphocyte growth medium comprising recombinant human interleukin-2 and human serum to acquire cells with a density as high as 108 cells/ml. PBMCs thus obtained remains functionally viable for 25 to 30 days in culture and are also found enriched in NK cell content allowing it to be widely used as effector cells, particularly T-cell response assays.

No. of Pages : 14 No. of Claims : 6

(12) PATENT APPLICATION PUBLICATION
(21) Application No.4897/CHE/2013 A
(19) INDIA
(22) Date of filing of Application :30/10/2013
(43) Publication Date : 25/12/2015

(54) Title of the invention : TOPICAL PHARMACEUTICAL COMPOSITIONS OF ANTIBIOTICS AND STEROIDAL ANTI-INFLAMMATORY AGENTS

(51) International classification :A61K9/00
(31) Priority Document No :NA
(32) Priority Date :NA
(33) Name of priority country :NA
(86) International Application No :NA
Filing Date :NA
(87) International Publication No : NA
(61) Patent of Addition to Application Number :NA
Filing Date :NA
(62) Divisional to Application Number :NA
Filing Date :NA

(71)**Name of Applicant :**
1)Micro Labs Limited
Address of Applicant :No. 27, Race Course Road, Bangalore - 560 001, India Karnataka India
(72)**Name of Inventor :**
1)KSHIRSAGAR, Rajesh
2)MUNDADE, Sachin

(57) Abstract :
The present invention relates to sterile, storage-stable topically administrable otic pharmaceutical compositions comprising one or more antibiotic(s) and one or more steroidal anti-inflammatory agent(s) and a process for preparation thereof. The topical pharmaceutical composition of the present invention further comprises ionic polymer and pharmaceutically acceptable excipients thereof. The topical pharmaceutical composition of invention is physically stable and can be easily re- suspended.

No. of Pages : 25 No. of Claims : 10

(12) PATENT APPLICATION PUBLICATION
(19) INDIA
(22) Date of filing of Application :30/08/2013
(21) Application No.7025/CHENP/2013 A
(43) Publication Date : 25/12/2015

(54) Title of the invention : PULLEY WITH ASYMMETRIC TORQUE SENSITIVE CLUTCHING

(51) International classification :F16D13/58
(31) Priority Document No :13/050019
(32) Priority Date :17/03/2011
(33) Name of priority country :U.S.A.
(86) International Application No :PCT/US2012/029320
Filing Date :16/03/2012
(87) International Publication No :WO 2012/125882
(61) Patent of Addition to Application Number :NA
Filing Date :NA
(62) Divisional to Application Number :NA
Filing Date :NA

(71)**Name of Applicant :**
1)DAYCO IP HOLDINGS LLC
Address of Applicant :2025 W. Sunshine Street Suite L145 Springfield Missouri 65807 U.S.A.
(72)**Name of Inventor :**
1)LANNUTTI Anthony E.
2)DUTIL Kevin

(57) Abstract :
A pulley assembly for an automobile accessory drive system includes a shaft engaging hub a nut threaded onto the shaft engaging hub an annular bushing and one or more brake shoes positioned around the outside of the annular bushing all housed with a pulley member. The nut is capable of axial translation relative to the annular bushing and the annular bushing is capable of expanding radially outward in response to the axial translation of the nut in a first direction to provide frictional engagement between the inner coupling surface of the pulley member and the outer coupling surface of the brake shoes which transfers torque from the pulley member to the input shaft. The nut includes a generally frustoconical outer surface opposite its inner threaded surface for seating the nut in the annular bushing.

FIG. 1

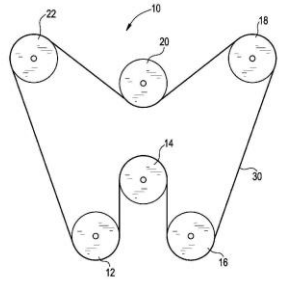

No. of Pages : 33 No. of Claims : 20

(12) PATENT APPLICATION PUBLICATION
(21) Application No.8817/CHENP/2013 A
(19) INDIA
(22) Date of filing of Application :04/11/2013
(43) Publication Date : 25/12/2015

(54) Title of the invention : METHOD FOR PRODUCING L CYSTINE BY FERMENTATION UNDER CONTROLLED OXYGEN SATURATION

(51) International classification :C12P13/12
(31) Priority Document No :10 2011 075 656.6
(32) Priority Date :11/05/2011
(33) Name of priority country :Germany
(86) International Application No :PCT/EP2012/058175
Filing Date :04/05/2012
(87) International Publication No :WO 2012/152664
(61) Patent of Addition to Application Number :NA
Filing Date :NA
(62) Divisional to Application Number :NA
Filing Date :NA

(71)**Name of Applicant :**
1)WACKER CHEMIE AG
Address of Applicant :Hanns Seidel Platz 4 81737 M¼nchen Germany
(72)**Name of Inventor :**
1)DASSLER Tobias
2)REUTTER MAIER Anneliese
3)SCHL–SSER Thomas

(57) Abstract :
2The invention relates to a method for producing L cystine by fermenting a microorganism strain in a fermentation medium in which method L cystine is precipitated in an amount of at least 70% relative to the total cysteine characterized in that the O saturation of the fermentation medium is kept at least at 1% and at most at 40 ± 3% during the formation of L cystine.

No. of Pages : 19 No. of Claims : 9

(12) PATENT APPLICATION PUBLICATION
(19) INDIA
(22) Date of filing of Application :04/11/2013

(21) Application No.8818/CHENP/2013 A
(43) Publication Date : 25/12/2015

(54) Title of the invention : TRANSMISSION METHOD AND MOBILE STATION TO CARRY OUT THE METHOD

(51) International classification :H04W36/18
(31) Priority Document No :11305419.1
(32) Priority Date :08/04/2011
(33) Name of priority country :EPO
(86) International Application No :PCT/EP2012/055508
Filing Date :28/03/2012
(87) International Publication No :WO 2012/136539 A1
(61) Patent of Addition to Application Number :NA
Filing Date :NA
(62) Divisional to Application Number :NA
Filing Date :NA

(71)**Name of Applicant :**
1)ALCATEL LUCENT
Address of Applicant :3 avenue Octave Grard F 75007 Paris France
(72)**Name of Inventor :**
1)WONG Shin Horng
2)BAKER Matthew

(57) Abstract :
A method in a cellular radio communication system comprising a core network and an access network the access network comprising base stations for providing wireless links to at least one mobile station the mobile station being capable of operating in a first transmission mode in which beamforming transmit diversity is not used and in a second transmission mode in which beamforming transmit diversity is used. The method comprises switching from the second transmission mode to the first transmission mode upon determining that at least one predetermined criterion related to the mobile station operation in soft handover is satisfied.

FIG_1

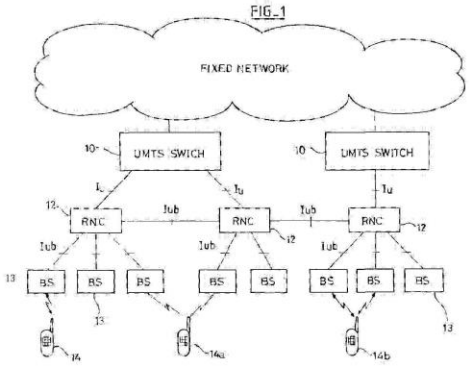

No. of Pages : 17 No. of Claims : 9

(12) PATENT APPLICATION PUBLICATION
(19) INDIA
(22) Date of filing of Application :21/11/2012
(21) Application No.9823/CHENP/2012 A
(43) Publication Date : 25/12/2015

(54) Title of the invention : INTER BASE STATION HANDOVER METHOD, RADIO COMMUNICATION SYSTEM, DRX CONTROL METHOD, BASE STATION, AND COMMUNICATION TERMINAL

(51) International classification :H04B 7/26
(31) Priority Document No :2007-025873
(32) Priority Date :05/02/2007
(33) Name of priority country :Japan
(86) International Application No :PCT/JP2008/51690
Filing Date :01/02/2008
(87) International Publication No : NA
(61) Patent of Addition to Application Number :NA
Filing Date :NA
(62) Divisional to Application Number :5200/CHENP/2009
Filed on :04/09/2009

(71)**Name of Applicant :**
1)NEC CORPORATION
Address of Applicant :7-1, SHIBA 5-CHOME, MINATO-KU, TOKYO 108-8001 Japan
(72)**Name of Inventor :**
1)FUTAKI, HISASHI
2)LEE, JINSOCK

(57) Abstract :
Disclosed is a DRX control method and system in which a source base station (101) forwards Dormancy Context, which is information for controlling the activity level of a mobile station (103) that performs inter base station handover, to a target base station (102) and, immediately after the mobile station completes handover, the target base station performs DRX control of the mobile station using the Dormancy Context. Fig.l

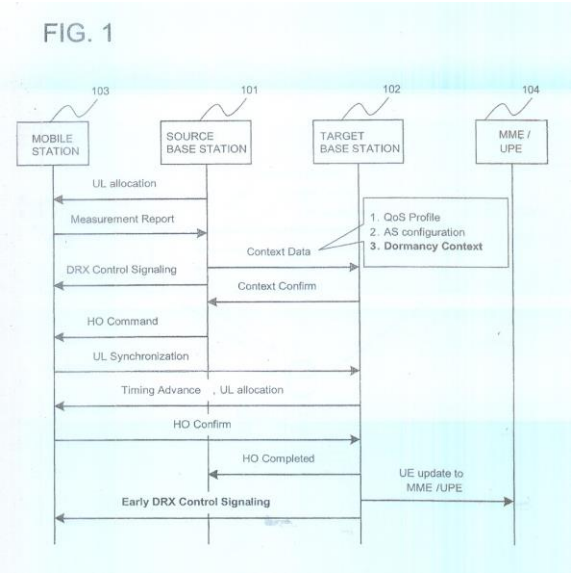

No. of Pages : 70 No. of Claims : 4

(12) PATENT APPLICATION PUBLICATION
(19) INDIA
(22) Date of filing of Application :21/11/2012

(21) Application No.9825/CHENP/2012 A
(43) Publication Date : 25/12/2015

(54) Title of the invention : INTER BASE STATION HANDOVER METHOD, RADIO COMMUNICATION SYSTEM, DRX CONTROL METHOD, BASE STATION, AND COMMUNICATION TERMINAL

(51) International classification :H04B 7/26
(31) Priority Document No :2007-025873
(32) Priority Date :05/02/2007
(33) Name of priority country :Japan
(86) International Application No :PCT/JP2008/51690
Filing Date :01/02/2008
(87) International Publication No :WO/2008/096685
(61) Patent of Addition to Application Number :NA
Filing Date :NA
(62) Divisional to Application Number :5200/CHENP/2009
Filed on :04/09/2009

(71)**Name of Applicant :**
1)NEC CORPORATION
Address of Applicant :7-1, SHIBA 5-CHOME, MINATO-KU, TOKYO 108-8001 Japan
(72)**Name of Inventor :**
1)FUTAKI, HISASHI
2)LEE, JINSOCK

(57) Abstract :
Disclosed is a DRX control method and system in which a source base station (101) forwards Dormancy Context, which is information for controlling the activity level of a mobile station (103) that performs inter base station handover, to a target base station (102) and, immediately after the mobile station completes handover, the target base station performs DRX control of the mobile station using the Dormancy Context. Fig.l

FIG. 1

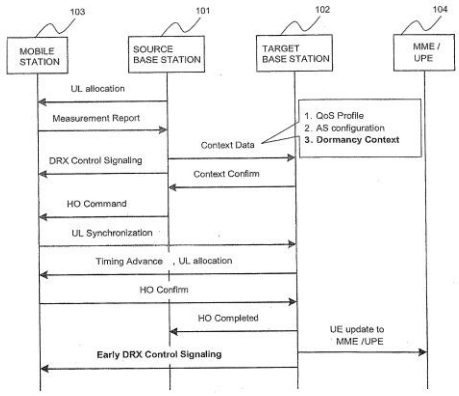

No. of Pages : 71 No. of Claims : 4

(12) PATENT APPLICATION PUBLICATION
(21) Application No.1767/CHE/2014 A
(19) INDIA
(22) Date of filing of Application :01/04/2014
(43) Publication Date : 25/12/2015

(54) Title of the invention : MUSCULOSKELETAL DISORDER DIAGNOSTIC SYSTEM

(51) International classification	:A61B 5/00
(31) Priority Document No	:NA
(32) Priority Date	:NA
(33) Name of priority country	:NA
(86) International Application No	:NA
Filing Date	:NA
(87) International Publication No	: NA
(61) Patent of Addition to Application Number	:NA
Filing Date	:NA
(62) Divisional to Application Number	:NA
Filing Date	:NA

(71)**Name of Applicant :**
1)YENEPOYA UNIVERSITY
Address of Applicant :University Road, Deralakatte, Mangalore 575018, Karnataka, India Karnataka India
(72)**Name of Inventor :**
1)MASCARENHAS ROHAN
2)KOTIAN SIDDHARTH
3)SHETTY RAGHAVENDRA

(57) Abstract :
A musculoskeletal diagnostic system for diagnosing lifestyle disorders. The system comprises a Head Positionometer unit and a handheld device. The Head Positionometer unit is used to detect the orientation of the head and neck of a patient. The Head Positionometer unit comprises a sensing device coupled to a measuring unit. The sensing device is positioned in the mouth of a patient to enable the patient to bite the sensing device, whereupon the measuring unit determines parameters associated with angular movement of the head and neck of the patient, to detect the orientation of the head and neck of the patient, wherein the parameters include Pitch, Roll and Yaw. The measuring unit wirelessly transmits data corresponding to the determined parameters to the handheld device wherein the received data is analyzed and the values of Pitch, Roll and Yaw are displayed on a display unit of the handheld device.

No. of Pages : 22 No. of Claims : 6

(12) PATENT APPLICATION PUBLICATION
(19) INDIA
(22) Date of filing of Application :08/05/2013
(21) Application No.2049/CHE/2013 A
(43) Publication Date : 25/12/2015

(54) Title of the invention : POLYMORPHIC FORM OF EZOGABINE AND PROCESS FOR THE PREPARATION THEREOF

(51) International classification :C07D
(31) Priority Document No :NA
(32) Priority Date :NA
(33) Name of priority country :NA
(86) International Application No :NA
Filing Date :NA
(87) International Publication No : NA
(61) Patent of Addition to Application Number :NA
Filing Date :NA
(62) Divisional to Application Number :NA
Filing Date :NA

(71)**Name of Applicant :**
1)APOTEX INC.
Address of Applicant :150 SIGNET DRIVE TORONTO, ONTARIO M9L 1T9 Canada
(72)**Name of Inventor :**
1)AKBARALI PADIYATH MOHAMMED
2)VENKATA RAMANA KINTALI
3)NIKHIL TRIVEDI
4)MANJUNATHA HICHANURU RAJASHEKARAIAH

(57) Abstract :
Provided herein is a polymorphic form of Ezogabine, namely APO-I and processes for the preparation thereof. The present invention further provide pharmaceutical compositions comprising polymorphic form APO-I of Ezogabine.

No. of Pages : 23 No. of Claims : 14

(12) PATENT APPLICATION PUBLICATION
(19) INDIA
(22) Date of filing of Application :18/09/2013
(21) Application No.4188/CHE/2013 A
(43) Publication Date : 25/12/2015

(54) Title of the invention : UV BLOCKING NON WETTING FABRIC USING NANOPARTICLES

(51) International classification :B62Y
(31) Priority Document No :NA
(32) Priority Date :NA
(33) Name of priority country :NA
(86) International Application No :NA
Filing Date :NA
(87) International Publication No : NA
(61) Patent of Addition to Application Number :NA
Filing Date :NA
(62) Divisional to Application Number :NA
Filing Date :NA

(71)**Name of Applicant :**
1)SATHYABAMA UNIVERSITY
Address of Applicant :JEPPIAAR, BAGAR, RAJIV GANDHI ROAD, CHENNAI 600 119 Tamil Nadu India
(72)**Name of Inventor :**
1)DR, BONIFACE, BRIJITTA JOSEPH
2)MR. DASNAMOORTHY, RAMACHANDRAN
3)MR. NIMAL RAJ, NIXON
4)MR. KANAGASABAI, VISWANATHAN
5)MR. RABEL. ARIL MAXIMUS
6)DR. THANKAPPAN, SASIPRABA
7)DR. JOHNSON, MARIE
8)DR. JOHNSON, MARIAZEENE
9)DR. JEPPIAAR

(57) Abstract :
ABSTRACT A UV blocking non-wetting fabric using nanoparticles made from a commercially available polyester fabric by Synthesis of ZnO and SiC>2 Nanoparticles coating the nanoparticles with alternating layers of PVBSA and PDDAC and Functionalization of the polyester fabric.

No. of Pages : 24 No. of Claims : 12

(12) PATENT APPLICATION PUBLICATION
(21) Application No.4392/CHE/2013 A
(19) INDIA
(22) Date of filing of Application :27/09/2013
(43) Publication Date : 25/12/2015

(54) Title of the invention : EFFECT OF SEMI - LABILE MULTIDENTATE LIGANDS ON OXYGEN REDUCTION REACTION PERFORMANCE OF NON - PRECIOUS METAL CATALYSTS

(51) International classification :C22B
(31) Priority Document No :NA
(32) Priority Date :NA
(33) Name of priority country :NA
(86) International Application No :NA
Filing Date :NA
(87) International Publication No : NA
(61) Patent of Addition to Application Number :NA
Filing Date :NA
(62) Divisional to Application Number :NA
Filing Date :NA

(71)**Name of Applicant :**
1)INDIAN INSTITUTE OF TECHNOLOGY MADRAS
Address of Applicant :IIT P.O, CHENNAI - 600 036 Tamil Nadu India
(72)**Name of Inventor :**
1)DR. KOTHANDARAMAN RAMANUJAM
2)KARTHIKAYINI M.P.

(57) Abstract :
ABSTRACT The present invention relates to a novel catalyst used for fuel cells and metal-air batteries and the effect of semi-labile multidentate ligands on oxygen reduction reaction performance of non-precious metal catalysts. Non precious metal catalyst reported here are, metal-nitrogen-carbon type, wherein metal could be iron (Fe), Cobalt (Co), Manganese (Mn), Nickel (Ni), Chromium (Cr) or Copper (Cu).

No. of Pages : 17 No. of Claims : 10

(12) PATENT APPLICATION PUBLICATION
(21) Application No.5290/CHE/2013 A
(19) INDIA
(22) Date of filing of Application :18/11/2013
(43) Publication Date : 25/12/2015

(54) Title of the invention : AN IMPROVED COMPUTER-IMPLEMENTED AND PERSONALIZED LEARNING MANAGEMENT SYSTEM

(51) International classification :G09B
(31) Priority Document No :NA
(32) Priority Date :NA
(33) Name of priority country :NA
(86) International Application No :NA
Filing Date :NA
(87) International Publication No : NA
(61) Patent of Addition to Application Number :NA
Filing Date :NA
(62) Divisional to Application Number :NA
Filing Date :NA

(71)**Name of Applicant :**
1)KRISHNAN NAIR, ABHILASH KUMAR
Address of Applicant :SP III 242(15) PALLOTTI LANE, GANDHIPURAM, SREEKARYAM, TRIVANDRUM 695 017 Kerala India
(72)**Name of Inventor :**
1)KRISHNAN NAIR, ABHILASH KUMAR
2)SREEMATHY AMMA, INDU VASAVAN NAIR

(57) Abstract :
An improved computer-implemented and personalized learning management system The present invention provides a software system for education of children. The present invention is capable of generating interest in the user for study subjects. The invention also recommends the user for further study materials based on their performance in the present level.

No. of Pages : 19 No. of Claims : 27

(12) PATENT APPLICATION PUBLICATION
(21) Application No.5241/CHE/2013 A
(19) INDIA
(22) Date of filing of Application :14/11/2013
(43) Publication Date : 25/12/2015

(54) Title of the invention : BATTERY SAVER PRO

(51) International classification :E03D1/00
(31) Priority Document No :NA
(32) Priority Date :NA
(33) Name of priority country :NA
(86) International Application No :NA
Filing Date :NA
(87) International Publication No : NA
(61) Patent of Addition to Application Number :NA
Filing Date :NA
(62) Divisional to Application Number :NA
Filing Date :NA

(71)**Name of Applicant :**
1)SAVEETHA SCHOOL OF ENGINEERING SAVEETHA UNIVERSITY
Address of Applicant :THANDALAM, CHENNAI - 602 105 Tamil Nadu India
(72)**Name of Inventor :**
1)K. PRASANTHI STUDENT
2)DR. D. DHANASEKAR PROF
3)S. CHAKARAVARTHI

(57) Abstract :
Battery saver pro app helps people to make emergency calls when their battery is dead. The main concept of this app is to save and store 10% of charge whenever we keep our mobile to charge .If ever the user wishes to store the charge in the app 100% at a stroke then he/she can do it. This app also shows the level of charging used at different times that means it shows the graphical representation of power consumption. It is compatible with smart phones.

No. of Pages : 5 No. of Claims : 4

(12) PATENT APPLICATION PUBLICATION
(19) INDIA
(22) Date of filing of Application :24/10/2013
(21) Application No.8579/CHENP/2013 A
(43) Publication Date : 25/12/2015

(54) Title of the invention : CIRCUIT CONNECTION MATERIAL CIRCUIT MEMBER CONNECTION STRUCTURE AND CIRCUIT MEMBER CONNECTION STRUCTURE MANUFACTURING METHOD

(51) International classification :H01R11/01,C09J7/00,C09J9/02
(31) Priority Document No :2011111831
(32) Priority Date :18/05/2011
(33) Name of priority country :Japan
(86) International Application No :PCT/JP2012/059804
Filing Date :10/04/2012
(87) International Publication No :WO 2012/157375
(61) Patent of Addition to Application Number :NA
Filing Date :NA
(62) Divisional to Application Number :NA
Filing Date :NA

(71)**Name of Applicant :**
1)HITACHI CHEMICAL COMPANY LTD.
Address of Applicant :9 2 Marunouchi 1 chome Chiyoda ku Tokyo 1006606 Japan
(72)**Name of Inventor :**
1)NAKAZAWA Takashi
2)FUJINAWA Tohru
3)TAKEMURA Kenzou
4)IIJIMA Yuusuke

(57) Abstract :
The present invention is a circuit connection material for electrically connecting opposing circuit electrodes comprising an adhesive composition and conductive particles. The conductive particles are aggregated particles with an average particle diameter of 5 20µm having a metal or nickel core with a Vickers hardness of 300 1000 and an outermost layer of a precious metal coating the core. Unevennesses are formed on the surface of the conductive particles.

Fig.1

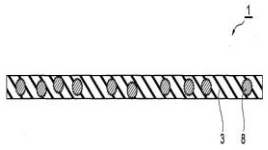

No. of Pages : 54 No. of Claims : 21

(12) PATENT APPLICATION PUBLICATION
(19) INDIA
(22) Date of filing of Application :31/10/2012

(21) Application No.9294/CHENP/2012 A
(43) Publication Date : 25/12/2015

(54) Title of the invention : IMPROVED RECONSTRUCTION FOR CONE-BEAM COMPUTED TOMOGRAPHY IMAGING WITH OFF-CENTER FLAT PANEL DETECTOR

(51) International classification :G06T 11/00
(31) Priority Document No :61/348757
(32) Priority Date :27/05/2010
(33) Name of priority country :U.S.A.
(86) International Application No :PCT/IB2011/051793
Filing Date :25/04/2011
(87) International Publication No :WO/2011/148277
(61) Patent of Addition to Application Number :NA
Filing Date :NA
(62) Divisional to Application Number :NA
Filing Date :NA

(71)**Name of Applicant :**
1)KONINKLIJKE PHILIPS ELECTRONICS N.V.
Address of Applicant :GROENEWOUDSEWEG 1 EINDHOVEN EINDHOVEN 5621 BA NETHERLANDS Netherlands
(72)**Name of Inventor :**
1)HANSIS Eberhard
2)SCHAEFER Dirk
3)GRASS Michael

(57) Abstract :
Computed tomography (CT) reconstruction includes reconstructing an axially extended reconstructed image from a measured cone beam x-ray projection data set (Pm) optionally having an off-center geometry. The reconstructing is performed for an extended volume (eFOV) comprising a reconstructable volume (rFOV) of the measured cone beam x ray data set that is extended along the axial direction. The projection data set may be weighted in the volume domain. Iterative reconstruction may be used including initializing a constant volume and performing one or more iterations employing a first iterative update followed by one or more iterations employing a second different iterative update. Alternatively backprojection filtration (BPF) reconstruction may be used including transforming the projection data set to a new geometry including finite differences between neighboring projection views and performing BPF using Hilbert filtering along a plurality of different directions and averaging the resultant reconstructed images to generate the final reconstructed image. Fig.1

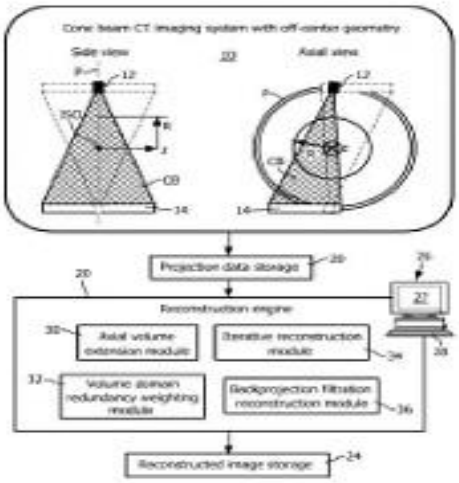

FIG. 1

No. of Pages : 34 No. of Claims : 24

(12) PATENT APPLICATION PUBLICATION
(19) INDIA
(22) Date of filing of Application :31/10/2012
(21) Application No.9299/CHENP/2012 A
(43) Publication Date : 25/12/2015

(54) Title of the invention : IMPROVED RECEIVER COIL

(51) International classification :H01F 38/14
(31) Priority Document No :10164209.8
(32) Priority Date :28/05/2010
(33) Name of priority country :EPO
(86) International Application No :PCT/IB2011/052042
Filing Date :10/05/2011
(87) International Publication No :WO/2011/148291
(61) Patent of Addition to Application Number :NA
Filing Date :NA
(62) Divisional to Application Number :NA
Filing Date :NA

(71)**Name of Applicant :**
1)KONINKLIJKE PHILIPS ELECTRONICS N.V.
Address of Applicant :GROENEWOUDSEWEG 1 EINDHOVEN EINDHOVEN 5621 BA NETHERLANDS Netherlands
(72)**Name of Inventor :**
1)WAFFENSCHMIDT Eberhard

(57) Abstract :
The invention relates to a planar receiver coil for use in a receiving device for receiving power from a transmitting device inductively the receiver coil is intended to be coupled with a transmitter coil of said transmitting device said receiver coil constituted by winding turns wherein the winding turns at the outer part of the receiver coil are denser than the winding turns at the inner part of the receiver coil. Fig.1C

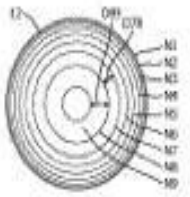

FIG. 1C

No. of Pages : 43 No. of Claims : 13

(12) PATENT APPLICATION PUBLICATION
(21) Application No.4895/CHE/2013 A
(19) INDIA
(22) Date of filing of Application :30/10/2013
(43) Publication Date : 25/12/2015

(54) Title of the invention : METHOD AND SYSTEM FOR SELECTING SPREADING SEQUENCES WITH VARIABLE SPREADING FACTORS

(51) International classification	:G06C	
(31) Priority Document No	:NA	
(32) Priority Date	:NA	
(33) Name of priority country	:NA	
(86) International Application No	:NA	
Filing Date	:NA	
(87) International Publication No	: NA	
(61) Patent of Addition to Application Number	:NA	
Filing Date	:NA	
(62) Divisional to Application Number	:NA	
Filing Date	:NA	

(71)**Name of Applicant :**
1)Samsung R & D Institute India- Bangalore Private Limited
Address of Applicant :# 2870, Orion Building, Bagmane Constellation Business Park, Outer Ring Road, Doddanekundi Circle, Marathahalli Post, Bangalore-560037 Karnataka India
(72)**Name of Inventor :**
1)Jinesh Parameshwaran Nair
2)Young-Jun Hong
3)ChangSoon Park
4)Sujit Jos
5)Youngsoo Kim
6)Manoj Choudhary

(57) Abstract :
ABSTRACT Embodiments herein achieve a method and system for selecting non-coherent spreading sequences with binary alphabets {0, 1} with variable spreading factors. The method generates circular shift equivalent sets of spreading sequences by circularly shifting base sequences with elements {1, 0} and having at least one variable spreading factor. The method determines whether each spreading sequence in the circular shift equivalent set meets pre-defined spreading sequence criteria. The spreading sequence criteria comprise balanced criteria, a non- repetition criteria, non-circular criteria, and conjugate criteria. Furthermore, the method selects the spreading sequence from expansions of at least one spreading sequence from the circular shift equivalent sets in response to determining that the spreading sequences in the circular shift equivalent sets meets the pre¬defined spreading sequence criteria.

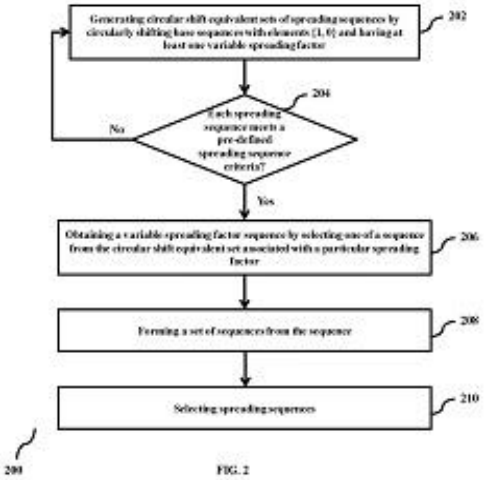

FIG. 2

No. of Pages : 114 No. of Claims : 70

(12) PATENT APPLICATION PUBLICATION
(19) INDIA
(22) Date of filing of Application :25/10/2013
(21) Application No.8598/CHENP/2013 A
(43) Publication Date : 25/12/2015

(54) Title of the invention : NOVEL COLOR CONVERTERS

(51) International classification :C09K11/06,H01L31/048,H01L31/055
(31) Priority Document No :11003839.5
(32) Priority Date :10/05/2011
(33) Name of priority country :EPO
(86) International Application No :PCT/EP2012/058503
Filing Date :09/05/2012
(87) International Publication No :WO 2012/152812
(61) Patent of Addition to Application Number :NA
Filing Date :NA
(62) Divisional to Application Number :NA
Filing Date :NA

(71)**Name of Applicant :**
1)BASF SE
Address of Applicant :67056 Ludwigshafen Germany
(72)**Name of Inventor :**
1)WAGENBLAST Gerhard
2)K–NEMANN Martin
3)IVANOVICI Sorin
4)DE KEYZER Gerardus
5)SEND Robert

(57) Abstract :
A color converter comprising at least one layer comprising at least one organic fluorescent colorant and at least one barrier layer having a low permeability to oxygen.

No. of Pages : 27 No. of Claims : 17

(12) PATENT APPLICATION PUBLICATION
(19) INDIA
(22) Date of filing of Application :20/02/2013

(21) Application No.736/CHE/2013 A
(43) Publication Date : 25/12/2015

(54) Title of the invention : A MINI IMPLANT SUPPORTING TUBE FOR ORTHODONTICS

(51) International classification :A61C
(31) Priority Document No :NA
(32) Priority Date :NA
(33) Name of priority country :NA
(86) International Application No :NA
Filing Date :NA
(87) International Publication No : NA
(61) Patent of Addition to Application Number :NA
Filing Date :NA
(62) Divisional to Application Number :NA
Filing Date :NA

(71)**Name of Applicant :**
1)Dr. NITIN V MURALIDHAR
Address of Applicant :14/A, Srinidhi, 6th Cross, M Block, Kuvempunagar, Mysore 570023. Karnataka, India. Karnataka India
(72)**Name of Inventor :**
1)Dr. NITIN V MURALIDHAR

(57) Abstract :
The present invention relates to a mini implants supporting tube for the orthodontic treatment. In one embodiment, the mini implant supporting tube includes a mini implant extended body including a head portion provided with a slotted type smoothly treated surface and a tissue contacting area with screw thread contour and a middle portion having a longitudinal slot in between head portion and tissue contact area to acquire the molar tube and a molar tube having a ˜T™ contour extended body with first and second end, wherein the first end includes a ˜U™ contour arm welded to receive the arch wires and the second end capable of accommodating the mini implant via the slot with the assist of bending locking clip welded and the extended body in second end. Figure 4 (for publication)

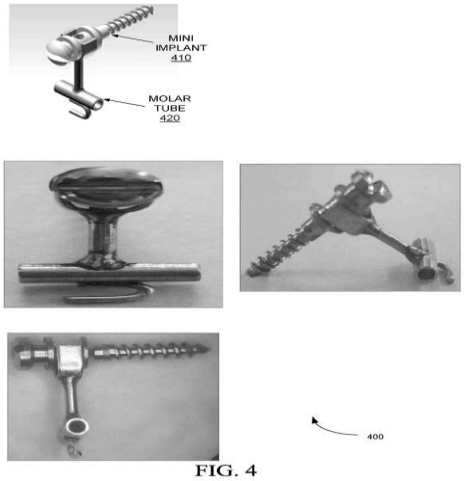

FIG. 4

No. of Pages : 25 No. of Claims : 10

(12) PATENT APPLICATION PUBLICATION
(19) INDIA
(22) Date of filing of Application :18/09/2013
(21) Application No.7561/CHENP/2013 A
(43) Publication Date : 25/12/2015

(54) Title of the invention : A PORTABLE SAMPLING DEVICE AND METHOD FOR SAMPLING DRUG SUBSTANCES FROM EXHALED BREATH

(51) International classification :G01N33/497,A61B5/097
(31) Priority Document No :11157564.3
(32) Priority Date :09/03/2011
(33) Name of priority country :EPO
(86) International Application No :PCT/EP2012/054180
Filing Date :09/03/2012
(87) International Publication No :WO 2012/120140
(61) Patent of Addition to Application Number :NA
Filing Date :NA
(62) Divisional to Application Number :NA
Filing Date :NA

(71)**Name of Applicant :**
1)SENSA BUES AB
Address of Applicant :Alfred Nobels All 10 S 141 52 Huddinge Sweden
(72)**Name of Inventor :**
1)BECK Olof
2)HAMMARLUND Bo

(57) Abstract :
A portable drug sampling device for handheldly collecting a sample from exhaled breath of a subject for further sensor based analysis. The device comprising: a housing (406) comprising at least one inlet (407) and at least one outlet (408) for the exhaled breath to exit through and a sampling membrane (302) arranged in the housing. A tubular element (40) having a mouthpiece section (401) for the subject to exhale into and a saliva trap section comprising baffles (103) to create a non straight gas flow path for letting aerosols pass through the tubular element. The sampling membrane (302) is arranged to collect the aerosols from the exhaled breath. The portable drug testing device further comprises a volume collecting element (208).

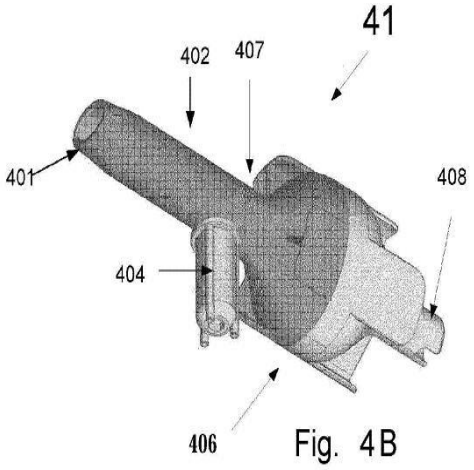

Fig. 4B

No. of Pages : 30 No. of Claims : 22

(12) PATENT APPLICATION PUBLICATION
(19) INDIA
(22) Date of filing of Application :14/02/2014
(21) Application No.706/CHE/2014 A
(43) Publication Date : 25/12/2015

(54) Title of the invention : ADDRESSABLE ULTRA-SENSITIVE SMOKE DETECTOR

(51) International classification :G06F
(31) Priority Document No :NA
(32) Priority Date :NA
(33) Name of priority country :NA
(86) International Application No :NA
Filing Date :NA
(87) International Publication No : NA
(61) Patent of Addition to Application Number :NA
Filing Date :NA
(62) Divisional to Application Number :NA
Filing Date :NA

(71)**Name of Applicant :**
1)NAVEEN ALARM SYSTEMS INDIA PVT. LTD.
Address of Applicant :NO.9, LAKSHMI VINAYAGAR KOIL STREET, AMBAL NAGAR, EKKATTUTHANGAL, CHENNAI - 600 097 Tamil Nadu India
(72)**Name of Inventor :**
1)P. ANANDARAJ

(57) Abstract :
An improved addressable ultra-sensitive smoke detector for sensing low density smoke substances and providing ultra-sensitive risk alert within a dynamic environment. The system includes a smoke sensor/detector, a temperature sensor and an addressable panel for receiving low voltage electrical power supply. The temperature sensor monitors the temperature levels and smoke detector detects the smoke levels in the physical environment.A chamber accommodates the smoke sensor, the temperature sensor and an LED and a controller. The chamber is designed in such a way that the air can pass through it but the light cannot enter inside the chamber. The smoke sensor and the LED are positioned at an inclined angle in order to effectively capture and measure the low density smoke substances in the environment. The controller captures the analog output signals of the smoke sensor and temperature sensor in order to thereby transmit the signals to a central processor unit at regular intervals for effective monitoring of the fire risk. The system includes a locking mechanism for effectively locking the chamber and providing required voltage supply to the sensor apparatus.

No. of Pages : 23 No. of Claims : 10

(12) PATENT APPLICATION PUBLICATION
(21) Application No.6904/CHENP/2013 A
(19) INDIA
(22) Date of filing of Application :27/08/2013
(43) Publication Date : 25/12/2015

(54) Title of the invention : VEHICLE APPROACH ALERT DEVICE FOR SADDLE RIDDEN ELECTRIC VEHICLE

(51) International classification :B62J3/00,B60Q5/00,B62J23/00
(31) Priority Document No :2011043322
(32) Priority Date :28/02/2011
(33) Name of priority country :Japan
(86) International Application No :PCT/JP2012/052524
Filing Date :03/02/2012
(87) International Publication No :WO 2012/117807
(61) Patent of Addition to Application Number :NA
Filing Date :NA
(62) Divisional to Application Number :NA
Filing Date :NA

(71)**Name of Applicant :**
1)HONDA MOTOR CO. LTD.
Address of Applicant :1 1 Minami Aoyama 2 chome Minato ku Tokyo 1078556 Japan
(72)**Name of Inventor :**
1)SHIMIZU Satoru
2)AKIBA Masahiro
3)AKIBA Ryuji
4)TANAKA Kazuhiko

(57) Abstract :
This vehicle approach alert device for a saddle ridden electric vehicle comprises a sound emitter for emitting an alert sound for alerting a surrounding area to the approach of the saddle ridden electric vehicle to the surrounding area the sound emitter being mounted on a vehicle body of the saddle ridden electric vehicle which includes an electric motor in a power engine wherein the sound emission by the sound emitter is controlled in accordance with the circumstances of the travel of the vehicle and the sound emitter is disposed such that the direction of the sound emission is oriented obliquely downward to the front of the saddle ridden electric vehicle.

No. of Pages : 107 No. of Claims : 21

(12) PATENT APPLICATION PUBLICATION
(19) INDIA
(22) Date of filing of Application :19/09/2013
(21) Application No.7598/CHENP/2013 A
(43) Publication Date : 25/12/2015

(54) Title of the invention : USE OF ACETYLATED TUBULIN AS A BIOMARKER OF DRUG RESPONSE TO FURAZANOBENZIMIDAZOLES

(51) International classification	:G01N33/50,A61K31/00,A61K38/00
(31) Priority Document No	:11155774.0
(32) Priority Date	:24/02/2011
(33) Name of priority country	:EPO
(86) International Application No	:PCT/EP2012/052954
Filing Date	:21/02/2012
(87) International Publication No	:WO 2012/113802
(61) Patent of Addition to Application Number	:NA
Filing Date	:NA
(62) Divisional to Application Number	:NA
Filing Date	:NA

(71)**Name of Applicant :**
1)BASILEA PHARMACEUTICA AG
Address of Applicant :Grenzacherstrasse 487 CH 4005 Basel Switzerland
(72)**Name of Inventor :**
1)LANE Heidi Alexandra
2)BACHMANN Felix

(57) Abstract :
Use of acetylated tubulin as a biomarker for predicting the response to a compound preferably resistance of a disease such as cancer in a subject to said compound wherein the compound is a furazanobenzimidazoles compound of general formula (I).

Figure 7

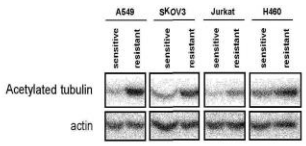

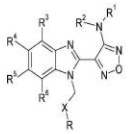

(I)

No. of Pages : 93 No. of Claims : 25

(12) PATENT APPLICATION PUBLICATION
(19) INDIA
(21) Application No.8645/CHENP/2013 A
(22) Date of filing of Application :28/10/2013
(43) Publication Date : 25/12/2015

(54) Title of the invention : ION EXCHANGE FIBERS AND METHOD FOR PRODUCING SAME METHOD FOR REMOVING AND ADSORBING CHEMICAL SUBSTANCE IN WATER AND DEVICE FOR REMOVING AND ADSORBING CHEMICAL SUBSTANCE IN WATER

(51) International classification	:D06M13/332,B01J45/00,B01J47/12
(31) Priority Document No	:2011100244
(32) Priority Date	:27/04/2011
(33) Name of priority country	:Japan
(86) International Application No	:PCT/JP2012/061415
Filing Date	:27/04/2012
(87) International Publication No	:WO 2012/147937
(61) Patent of Addition to Application Number	:NA
Filing Date	:NA
(62) Divisional to Application Number	:NA
Filing Date	:NA

(71)**Name of Applicant :**
1)KANEKA CORPORATION
Address of Applicant :2 3 18 Nakanoshima 2 chome Kita ku Osaka shi Osaka 5308288 Japan
(72)**Name of Inventor :**
1)HIRAI Yusuke
2)MIO Wataru
3)TAMURA Masanobu
4)MATSUMOTO Yoshitomo
5)MICHINOBU Takao

(57) Abstract :
Provided are ion exchange fibers comprising a polymer (A) wherein an ion exchangeable substitution group is introduced to 100 parts by weight of an acrylic polymer obtained by polymerization of a monomer composition comprising 30 wt% or more of acrylonitrile per 100 wt% of composition and a polymer (B) wherein an ion exchangeable substitution group is introduced to 1 to 100 parts by weight of an epoxy group containing polymer. Each of the ion exchangeable substitution groups is an ion exchangeable substitution group derived from an amine compound that is introduced by reaction with an amine compound. Also provided is a method for producing the same ion exchange fibers.

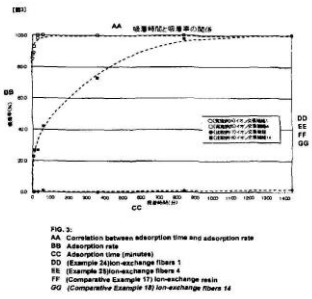

FIG. 3:
AA Correlation between adsorption time and adsorption rate
BB Adsorption rate
CC Adsorption time (minutes)
DD (Example 24)Ion-exchange fibers 1
EE (Example 25)Ion-exchange fibers 4
FF (Comparative Example 17) Ion-exchange resin
GG (Comparative Example 18) Ion-exchange fibers 14

No. of Pages : 70 No. of Claims : 23

(12) PATENT APPLICATION PUBLICATION
(21) Application No.724/CHE/2014 A
(19) INDIA
(22) Date of filing of Application :17/02/2014
(43) Publication Date : 25/12/2015

(54) Title of the invention : AN IMPROVED PROCESS FOR THE PREPARATION OF AN OPTICALLY ACTIVE INDOLINE DERIVATIVE

(51) International classification :A61K
(31) Priority Document No :NA
(32) Priority Date :NA
(33) Name of priority country :NA
(86) International Application No :NA
Filing Date :NA
(87) International Publication No : NA
(61) Patent of Addition to Application Number :NA
Filing Date :NA
(62) Divisional to Application Number :NA
Filing Date :NA

(71)**Name of Applicant :**
1)AUROBINDO PHARMA LTD
Address of Applicant :THE WATER MARK BUILDING, PLOT NO. 11, SURVEY NO. 9, KONDAPUR, HITECH CITY, HYDERABAD - 500 084 Andhra Pradesh India
(72)**Name of Inventor :**
1)JAYATI MITRA
2)AMINUL ISLAM
3)CHENNURI RAJESH
4)MEENAKSHISUNDERAM SIVAKUMARAN

(57) Abstract :
The present invention relates to an improved process for the preparation of an optically active indoline derivative of a compound of formula (II), wherein R is hydroxyl protecting group. The compound of formula (II) is the key intermediate in the synthesis Silodosin of a compound of formula (I).

No. of Pages : 20 No. of Claims : 10

(12) PATENT APPLICATION PUBLICATION
(19) INDIA
(22) Date of filing of Application :24/02/2014
(21) Application No.889/CHE/2014 A
(43) Publication Date : 25/12/2015

(54) Title of the invention : GEARED TRANSMISSION SYSTEM FOR TWO STROKE AND FOUR STROKE ENGINE

(51) International classification :F02B
(31) Priority Document No :NA
(32) Priority Date :NA
(33) Name of priority country :NA
(86) International Application No :NA
Filing Date :NA
(87) International Publication No : NA
(61) Patent of Addition to Application Number :NA
Filing Date :NA
(62) Divisional to Application Number :NA
Filing Date :NA

(71)**Name of Applicant :**
1)TVS MOTOR COMPANY LIMITED
Address of Applicant :NO. 29, HADDOWS ROAD, CHENNAI - 600 006 Tamil Nadu India
(72)**Name of Inventor :**
1)SIVARAMAN GOPALAKRISHNAN
2)SAPTARSHI SAMANTA
3)SHRINIDHI SHRIDHARA

(57) Abstract :
The present invention illustrates a geared transmission system and method to block the oil flow from the counter shaft automatically at low engine RPM to reduce clutch drag and enable a smooth gear shift feel where the standard countershaft 5 is modified 2 in a way to have a counter-bore at the end to receive the new nozzle assembly 1. The new nozzle assembly 1 comprises of the nozzle 6, centrifugal mass 7 and the loading spring 8 assembled into the counter bore. When the vehicle is running in an idling RPM (Revolutions per Minute), the loading spring will block the oil flow path in the nozzle 6. At a higher engine RPM due to the centrifugal forc the cylinder mass will fly out allowing the oil to flow through the countershaft 2. This will preserve the properties of the friction material of the clutch plates and also keep the plates cool. Thus, the durability of the clutch plates will not be compromised. Figure 5

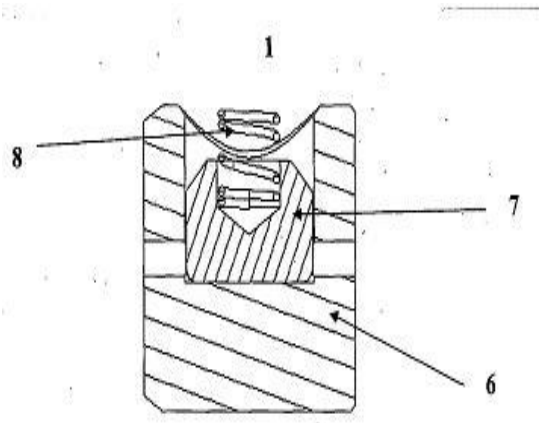

Figure 5a

No. of Pages : 13 No. of Claims : 9

(12) PATENT APPLICATION PUBLICATION
(19) INDIA
(22) Date of filing of Application :28/08/2013

(21) Application No.6936/CHENP/2013 A
(43) Publication Date : 25/12/2015

(54) Title of the invention : SYSTEM AND METHOD FOR RULE BASED PRESENTMENT AND PAYMENT OF BILLS OR INVOICES

(51) International classification :G06Q30/00
(31) Priority Document No :NA
(32) Priority Date :NA
(33) Name of priority country :NA
(86) International Application No :PCT/IN2011/000184
Filing Date :21/03/2011
(87) International Publication No :WO 2012/127478
(61) Patent of Addition to Application Number :NA
Filing Date :NA
(62) Divisional to Application Number :NA
Filing Date :NA

(71)**Name of Applicant :**
1)INFOSYS TECHNOLOGIES LIMITED
Address of Applicant :Plot No. 44 Electronics City Hosur Road Bangalore 500 100 Karnataka Karnataka India
(72)**Name of Inventor :**
1)HOSHING Deepak
2)SENAKUMARI Arunnima Balakrishnan
3)THOGARAPALLI Dinesh Chennabasavan
4)VARGHESE Rivi

(57) Abstract :
A computer implemented method for facilitating presentment and payment of bills or invoices related to consumption of products and services between a biller and a payer via an online payment portal over a communication network is provided. A template is generated that defines terms and conditions related to payment of a bill or invoice. The terms and conditions are accepted by the payer and the payer s financial institution and received from the biller. One or more rules are derived from data related to the terms and conditions defined in the template. The derived one or more rules are applied on the bill or invoice associated with the template to derive processing logic. Payment of the bill or invoice made by the payer is processed using the derived processing logic.

FIG. 1

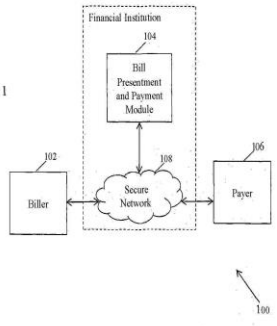

No. of Pages : 36 No. of Claims : 17

(12) PATENT APPLICATION PUBLICATION
(21) Application No.726/CHE/2014 A
(19) INDIA
(22) Date of filing of Application :03/03/2014
(43) Publication Date : 25/12/2015

(54) Title of the invention : ADJUSTABLE TILT ANGLE DEVICE FOR SOLAR PANEL ARRAYS

(51) International classification :F24J
(31) Priority Document No :NA
(32) Priority Date :NA
(33) Name of priority country :NA
(86) International Application No :NA
Filing Date :NA
(87) International Publication No : NA
(61) Patent of Addition to Application Number :NA
Filing Date :NA
(62) Divisional to Application Number :NA
Filing Date :NA

(71)**Name of Applicant :**
1)MAGANTI SRINIVAS RAO
Address of Applicant :Plot No: 409, Road No 81, Phase 3, Jubilee Hills, Hyderabad. Andhra Pradesh India
2)PACHIPULUSU NIKHIL BABU
3)DASARI SRIRAM
4)KROTHAPALLI HARISH CHOWDARY
5)POPURI HIMAMSU
(72)**Name of Inventor :**
1)POPURI HIMAMSU
2)PACHIPULUSU NIKHIL BABU
3)BOGGAVARAPU CHOWDARY CHARAN
4)MEDIPALLY HARIKRISHNA

(57) Abstract :
The present invention relates generally to adjustable tilt angle devices for solar panel arrays. A principle objective of the invention is to provide an adjustable tilt solar panel support that can be mounted in a system arrangement on a post using existing support technology with adjustable height inserts for ease of assembly. The modules are mounted on purlins through bolting or clamping, as per the requirement and type of the module. The number of bolts on each leg and the length of the L plate depend upon its location in the structure. Tie rods are provided between purlins to account for the torsional buckling that might result from wind loads. Use of double bolt arrangement for connecting rafter and column is employed to accommodate the tilt.

No. of Pages : 18 No. of Claims : 9

(12) PATENT APPLICATION PUBLICATION
(19) INDIA
(22) Date of filing of Application :05/11/2012
(21) Application No.9409/CHENP/2012 A
(43) Publication Date : 25/12/2015

(54) Title of the invention : ACTUATOR ADAPTER PLATE

(51) International classification :F16K31/52
(31) Priority Document No :61/322731
(32) Priority Date :09/04/2010
(33) Name of priority country :U.S.A.
(86) International Application No :PCT/US2011/027952
Filing Date :10/03/2011
(87) International Publication No :WO 2011/126662
(61) Patent of Addition to Application Number :NA
Filing Date :NA
(62) Divisional to Application Number :NA
Filing Date :NA

(71)**Name of Applicant :**
1)EMERSON PROCESS MANAGEMENT REGULATOR TECHNOLOGIES INC.
Address of Applicant :310 East University Drive Mckinney TX 75070 U.S.A.
(72)**Name of Inventor :**
1)NASHERY Khashayar A.
2)SCHEFFLER Douglas J.
3)PELFREY Roy Ronald
4)SEXTON Jeffrey

(57) Abstract :
A valve assembly (10) for use in a piping system (A) includes a valve (12) having an inlet (15) and outlet (17) arranged for connection to the piping system (A) and further includes a valve body (14) a control element disposed in a flow passage and a shiftable valve stem (16) operatively coupled to the control element. Valve packing (56) is disposed about the valve stem (16) and is secured by a retainer assembly (54). An adapter plate (26) is provided and is attached to the valve body (14) by a plurality of gland bolts (28) with the adapter plate (26) and the gland bolts (28) cooperating to secure the retainer assembly (54). An actuator bracket (30) is provided and includes a first portion (36) and a second portion (36) with the first portion (36) secured to the adapter plate (26) by a plurality of fasteners (28) and an actuator (18) is secured to the second portion (36) of the actuator bracket (30) by a plurality of fasteners (28) with the actuator (18) having a control rod (20) operatively coupled to the valve stem (16).

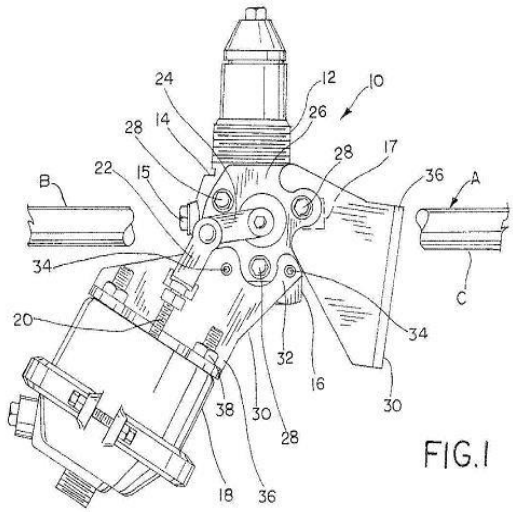

FIG.1

No. of Pages : 16 No. of Claims : 12

(12) PATENT APPLICATION PUBLICATION
(21) Application No.664/CHE/2014 A
(19) INDIA
(22) Date of filing of Application :12/03/2014
(43) Publication Date : 25/12/2015

(54) Title of the invention : Unfermented Inflorescence Sap and a process for preparing the same

(51) International classification :C11D
(31) Priority Document No :NA
(32) Priority Date :NA
(33) Name of priority country :NA
(86) International Application No :NA
Filing Date :NA
(87) International Publication No : NA
(61) Patent of Addition to Application Number :NA
Filing Date :NA
(62) Divisional to Application Number :NA
Filing Date :NA

(71)**Name of Applicant :**
1)Registrar, Kerala Agricultural University, Vellanikkara
Address of Applicant :Vellanikkara, Thrissur, 680656 Kerala India
(72)**Name of Inventor :**
1)Dr. B. Jayaprakash Naik
2)Dr. P.R. Suresh
3)Dr. P.C. Balakrishnan
4)Dr. Madhu Subrahmanian
5)Dr. A.V. Meera Manjusha
6)Dr. George Mathew

(57) Abstract :
The present invention relates to unfermented sap comprising of inflorescence sap, pH stabilizer and preservative, wherein the inflorescence sap is pre-treated with lime, activated charcoal and citric acid.

No. of Pages : 16 No. of Claims : 10

(12) PATENT APPLICATION PUBLICATION
(19) INDIA
(22) Date of filing of Application :19/09/2013
(21) Application No.7614/CHENP/2013 A
(43) Publication Date : 25/12/2015

(54) Title of the invention : ON LOAD TAP CHANGER

(51) International classification :H01H9/00
(31) Priority Document No :10 2011 013 749.1
(32) Priority Date :12/03/2011
(33) Name of priority country :Germany
(86) International Application No :PCT/EP2012/051963
Filing Date :06/02/2012
(87) International Publication No :WO 2012/123187 A1
(61) Patent of Addition to Application Number :NA
Filing Date :NA
(62) Divisional to Application Number :NA
Filing Date :NA

(71)**Name of Applicant :**
1)MASCHINENFABRIK REINHAUSEN GMBH
Address of Applicant :Falkensteinstrae 8 93059 Regensburg Germany
(72)**Name of Inventor :**
1)ALBRECHT Wolfgang
2)H–PFL Klaus
3)WREDE Silke

(57) Abstract :
The invention relates to an on load tap changer for switching between winding taps of a step transformer without interruption comprising a separate selector for preselecting the winding tap to be switched to without control current and a separate load transfer switch for actually transferring the load from the previous to the preselected new winding tap. The invention further relates to an energy store having at least one energy store spring that is first tensioned for each load transfer by a rotating drive shaft and that abruptly actuates the load transfer switch after being triggered. According to the invention a gear is provided by means of which the energy store can be tensioned. A first mechanical freewheel is provided between the gear and the energy store such that the energy store can be tensioned after a time delay and a further mechanical freewheel (17) is provided between the energy store and a step by step motion linkage actuating the load transfer switch.

No. of Pages : 18 No. of Claims : 4

(12) PATENT APPLICATION PUBLICATION
(19) INDIA
(22) Date of filing of Application :16/11/2012
(21) Application No.9707/CHENP/2012 A
(43) Publication Date : 25/12/2015

(54) Title of the invention : DIRECT COMPRESSION FORMULATION AND PROCESS

(51) International classification :A61K 9/20
(31) Priority Document No :60/537,706
(32) Priority Date :20/01/2004
(33) Name of priority country :U.S.A.
(86) International Application No :PCT/EP2005/00400
Filing Date :17/01/2005
(87) International Publication No :WO/2005/067976
(61) Patent of Addition to Application Number :NA
Filing Date :NA
(62) Divisional to Application Number :2669/CHENP/2006
Filed on :17/01/2005

(71)**Name of Applicant :**
1)NOVARTIS AG
Address of Applicant :LICHTSTRASSE 35, CH-4056 BASEL Switzerland
(72)**Name of Inventor :**
1)KOWALSKI, JAMES
2)PARTHIBAN, LAKSHMAN, JAYANTH
3)PATEL, ARUN, P.

(57) Abstract :
Dipeptidylpeptidase IV inhibitor (herein referred to as DPP-IV) that may be 98.5-100% pure is a high-dose drug capable of being directly compressed with specific excipients into sold form dosage forms, such as tablets and capsules having desired, hardness, disintegrating ability and acceptable dissolution characteristics. DPP-IV is not inherently compressible and thus presents formulation problems. Excipients used in the formulation enhance the flow and compaction properties of the drug and tableting mix. Optimal flow contributes to uniform die fill and weight control. The binder used ensures sufficient cohesive properties that allow DPP-IV to be compressed using the direct compression method. The tablets produced provide an acceptable in vitro dissolution profile.

No. of Pages : 51 No. of Claims : 55

(12) PATENT APPLICATION PUBLICATION
(21) Application No.666/KOL/2014 A
(19) INDIA
(22) Date of filing of Application :19/06/2014
(43) Publication Date : 25/12/2015

(54) Title of the invention : SAFE AND EFFICIENT DIRTY DATA FLUSH FOR DYNAMIC LOGICAL CAPACITY BASED CACHE IN STORAGE SYSTEMS

(51) International classification	:G06F 12/00
(31) Priority Document No	:NA
(32) Priority Date	:NA
(33) Name of priority country	:NA
(86) International Application No	:NA
Filing Date	:NA
(87) International Publication No	: NA
(61) Patent of Addition to Application Number	:NA
Filing Date	:NA
(62) Divisional to Application Number	:NA
Filing Date	:NA

(71)**Name of Applicant :**
1)LSI CORPORATION
Address of Applicant :1320 RIDDER PARK DRIVE, SAN JOSE, CALIFORNIA 95131 UNITED STATES OF AMERICA.
(72)**Name of Inventor :**
1)SUMANESH SAMANTA
2)SRIKANTH KRISHNAMURTHY SETHURAMACHAR
3)RAMKUMAR VENKATACHALAM

(57) Abstract :
Systems and methods to safely and efficiently handle dirty data flush are disclosed. More specifically, when a cache controller determines that one(or more) storage device of a cache device is running out of space, that storage device is given priority to be flushed prior to the other storage devices that are not in such a critical condition. In addition, a cache bypass process can be conditionally enabled to save free physical spaces already running low on such critical cache storage devices.

No. of Pages : 25 No. of Claims : 20

(12) PATENT APPLICATION PUBLICATION
(21) Application No.667/KOL/2014 A
(19) INDIA
(22) Date of filing of Application :19/06/2014
(43) Publication Date : 25/12/2015

(54) Title of the invention : A MACHINE FOR ROLLING, GROOVING AND SPIKING FOR COMPACTING OF STAMPED COAL CAKE INSIDE THE HOT COKE OVEN FOR IMPROVING THE QUALITY OF COKE.

(51) International classification	:C10B 45/00
(31) Priority Document No	:NA
(32) Priority Date	:NA
(33) Name of priority country	:NA
(86) International Application No	:NA
Filing Date	:NA
(87) International Publication No	: NA
(61) Patent of Addition to Application Number	:NA
Filing Date	:NA
(62) Divisional to Application Number	:NA
Filing Date	:NA

(71)**Name of Applicant :**
1)KUNDU SINGH
Address of Applicant :307 BIA MERLINE CHAMBER, 18-BRITISH INDIA STREET, KOLKATA - 700069, INDIA West Bengal India
2)SURENDRA KUMAR SINGHA
3)HARSH SINHA
(72)**Name of Inventor :**
1)KUNDU SINGH
2)SURENDRA KUMAR SINGHA
3)HARSH SINHA

(57) Abstract :
This invention relates to a machine for rolling, grooving and spiking for further compaction of charged stamped coal cakes for improving quality of coke comprising a beam connected with atleast one compacting roller at its front end by means of shaft wherein the beam and roller are driven by suitable means. It is associated with the following advantageous features:- - Further compaction of the stamped coal cake inside the hot coke oven further increases its bulk density and makes the resultant coke more stronger with higher CSR valves and lower CRI. - Further compaction of the stamped coal cakes inside the hot coke oven eliminates the gaps between the charged coal cakes and oven walls thereby permitting utilization of the beneficial effect of the coking pressure developed during carbonization of the coking blends, which significantly improves the quality of the coke produced. - Increase in the productivity of the oven as wasteful gaps are eliminated from the coking chamber. - More uniform quality of coke. - Use of more quantity of cheaper and lower grade coals in coking blends to produce good quality coke, which makes production of metallurgical coke more cost effective.

No. of Pages : 22 No. of Claims : 11

(12) PATENT APPLICATION PUBLICATION
(21) Application No.786/KOLNP/2015 A
(19) INDIA
(22) Date of filing of Application :23/03/2015
(43) Publication Date : 25/12/2015

(54) Title of the invention : LEAKAGE DETECTOR, LEAKAGE DETECTION METHOD, AND PIPE NETWORK MONITORING APPARATUS

(51) International classification :G01M3/24,G01H11/08
(31) Priority Document No :2012-209316
(32) Priority Date :24/09/2012
(33) Name of priority country :Japan
(86) International Application No :PCT/JP2013/075464
Filing Date :20/09/2013
(87) International Publication No :WO 2014/046237
(61) Patent of Addition to Application Number :NA
Filing Date :NA
(62) Divisional to Application Number :NA
Filing Date :NA

(71)**Name of Applicant :**
1)SEKISUI CHEMICAL CO., LTD.
Address of Applicant :4-4, Nishitemma 2-chome, Kita-ku, Osaka-shi, Osaka 5308565 JAPAN
(72)**Name of Inventor :**
1)KONDOU, HIROAKI

(57) Abstract :
Provided is a leakage detector such that sensitivity to vibration sound caused by water leakage in a synthetic resin pipe is high and installation span can be increased, enabling investigation of water leakage in the synthetic resin pipe with increased efficiency. A leakage detector (6) is provided with: a base (11); a piezoelectric element (9) supported on the base (21) that converts vibration sound into an electric signal; and a weight (28) mounted on the piezoelectric element (9). The piezoelectric element (9) is formed of a polymer piezoelectric material. One end of the piezoelectric element (9) is supported on the upper end of a support (27), and the weight (28) is mounted on the other end of the piezoelectric element (9).

No. of Pages : 83 No. of Claims : 8

(12) PATENT APPLICATION PUBLICATION
(19) INDIA
(22) Date of filing of Application :23/03/2015
(21) Application No.787/KOLNP/2015 A
(43) Publication Date : 25/12/2015

(54) Title of the invention : WELLBORE FLUIDS AND METHOD OF USE

(51) International classification :C09K8/035
(31) Priority Document No :61/704794
(32) Priority Date :24/09/2012
(33) Name of priority country :U.S.A.
(86) International Application No :PCT/US2013/061270
Filing Date :24/09/2013
(87) International Publication No :WO 2014/047600
(61) Patent of Addition to Application Number :NA
Filing Date :NA
(62) Divisional to Application Number :NA
Filing Date :NA

(71)**Name of Applicant :**
1)SASOL OLEFINS & SURFACTANTS GMBH
Address of Applicant :1 Ankelmannsplatz 20537 Hamburg Germany
(72)**Name of Inventor :**
1)PLUMMER Daniel T.
2)JONES Christian W.
3)FERNANDEZ Jorge M.

(57) Abstract :
A base fluid for formulating wellbore fluids. The base fluid comprises a mixture of synthetic aliphatic hydrocarbons derived from a Fischer Tropsch product stream and contains greater than 96% aliphatic hydrocarbons having a carbon number range of from C6 to C30. The percentage of homologues having a carbon number of C10 or less is less than about 3 wt%.

No. of Pages : 23 No. of Claims : 26

(12) PATENT APPLICATION PUBLICATION
(19) INDIA
(22) Date of filing of Application :23/03/2015
(21) Application No.788/KOLNP/2015 A
(43) Publication Date : 25/12/2015

(54) Title of the invention : MULTI-DIAGNOSIS PARALLEL-TYPE LINEAR BIOCHIP

(51) International classification :G01N33/53,G01N33/68,C12Q1/68
(31) Priority Document No :10-2013-0025216
(32) Priority Date :08/03/2013
(33) Name of priority country :Republic of Korea
(86) International Application No :PCT/KR2014/000438
Filing Date :15/01/2014
(87) International Publication No :WO 2014/137069
(61) Patent of Addition to Application Number :NA
Filing Date :NA
(62) Divisional to Application Number :NA
Filing Date :NA

(71)**Name of Applicant :**
1)PROTEOMETECH INC.
Address of Applicant :B202 Yonsei Dairy Building, 50, Yonsei-ro, Seodaemun-gu Seoul 120-110 REPUBLIC OF KOREA
(72)**Name of Inventor :**
1)LIM, KOOK JIN
2)CHOI, DONG SEOB
3)KIM, BUM JOON
4)KIM, MI JUNG
5)CHUNG, MYUNG SOOK
6)LEE, HYE JUNG

(57) Abstract :
The present invention relates to a multi-diagnosis parallel-type linear biochip, and more specifically, to a biochip comprising: a plurality of linear strips arranged in parallel; and a container for fixing the strips. When the biochip of the present invention is used, two or more linear strips can be connected in parallel, and thus various substances present in a biological sample can be simultaneously measured.

No. of Pages : 22 No. of Claims : 11

(12) PATENT APPLICATION PUBLICATION
(19) INDIA
(22) Date of filing of Application :25/03/2015
(21) Application No.326/KOL/2015 A
(43) Publication Date : 25/12/2015

(54) Title of the invention : METHOD AND FACILITY FOR CUTTING CONCRETE PRODUCT

(51) International classification :B23Q1/00
(31) Priority Document No :20145371
(32) Priority Date :22/04/2014
(33) Name of priority country :Finland
(86) International Application No :NA
Filing Date :NA
(87) International Publication No : NA
(61) Patent of Addition to Application Number :NA
Filing Date :NA
(62) Divisional to Application Number :NA
Filing Date :NA

(71)**Name of Applicant :**
1)ELEMATIC OY AB
Address of Applicant :PL 33, FI-37801 AKAA, FINLAND
(72)**Name of Inventor :**
1)KANKKUNEN, HEIKKI

(57) Abstract :
Method and facility (1) for cutting a slipform cast hol- low-core concrete product (21) with water jet cutting, wherein in the outer surface of the fresh cast hollow- core concrete product (21) is formed depressions or grooves (24, 25, 25) in the areas to be cut with water jet cutting before curing of the hollow-core concrete product, which depressions or grooves extend in the area of the hollow-cores (22) of the concrete product.

No. of Pages : 13 No. of Claims : 8

(12) PATENT APPLICATION PUBLICATION
(19) INDIA
(22) Date of filing of Application :31/03/2015
(21) Application No.361/KOL/2015 A
(43) Publication Date : 25/12/2015

(54) Title of the invention : MOBILE TERMINAL AND CONTROL METHOD FOR THE MOBILE TERMINAL

(51) International classification	:F28D15/02
(31) Priority Document No	:10-2014-0040153
(32) Priority Date	:03/04/2014
(33) Name of priority country	:Republic of Korea
(86) International Application No	:NA
Filing Date	:NA
(87) International Publication No	: NA
(61) Patent of Addition to Application Number	:NA
Filing Date	:NA
(62) Divisional to Application Number	:NA
Filing Date	:NA

(71)**Name of Applicant :**
1)LG ELECTRONICS INC.
Address of Applicant :128, YEOUI-DAERO, YEONGDEUNGPO-GU, SEOUL 150-721 REPUBLIC OF KOREA
(72)**Name of Inventor :**
1)DAEMYEONG PARK

(57) Abstract :
Disclosed is a mobile terminal having a side display unit. The mobile terminal includes: a body having a front surface, side surfaces and a rear surface; a display unit having a first region disposed on the front surface, and a second region extending from the first region, the second region disposed on the side surface; a touch sensing unit configured to sense a touch input applied to the display unit; and a controller configured to; sense, via the touch sensing unit, at least one touch input applied to one or more points on the second region in a state where screen information has been output to the first region, and process the least one touch input applied to the one or more points on the second region as a storing command for storing at least part of the screen information output to the first region, when the at least one touch input applied to the one or more points on the second region corresponds to a predetermined touch type.

No. of Pages : 174 No. of Claims : 20

(12) PATENT APPLICATION PUBLICATION
(21) Application No.794/KOLNP/2015 A
(19) INDIA
(22) Date of filing of Application :24/03/2015
(43) Publication Date : 25/12/2015

(54) Title of the invention : HEAT TRANSFER PLATE AND PLATE HEAT EXCHANGER COMPRISING SUCH A HEAT TRANSFER PLATE

(51) International classification	:F28F3/08,F28F3/04
(31) Priority Document No	:12190493.2
(32) Priority Date	:30/10/2012
(33) Name of priority country	:EPO
(86) International Application No	:PCT/EP2013/071149
Filing Date	:10/10/2013
(87) International Publication No	:WO 2014/067757
(61) Patent of Addition to Application Number	:NA
Filing Date	:NA
(62) Divisional to Application Number	:NA
Filing Date	:NA

(71)**Name of Applicant :**
1)ALFA LAVAL CORPORATE AB
Address of Applicant :P.O. Box 73 S 221 00 Lund Sweden
(72)**Name of Inventor :**
1)ALFA LAVAL CORPORATE AB

(57) Abstract :
A heat transfer plate (8) and a plate heat exchanger (2) comprising such a heat transfer plate is provided. The heat transfer plate has a central extension plane (c c) and comprises a first end area (28) a heat transfer area (32) and a second end area (30) arranged in succession along a longitudinal center axis (y) of the heat transfer plate. The longitudinal center axis divides the heat transfer plate into a first and a second half (20 22). The first end area comprises an inlet port hole (34) arranged within the first half of the heat transfer plate a distribution area (42) and a transition area (44). The transition area adjoins the distribution area along a first borderline (46) and the heat transfer area along a second borderline (48). The distribution area has a distribution pattern of distribution projections (64) and distribution depressions (66) in relation to the central extension plane the transition area has a transition pattern of transition projections (84) and transition depressions (86) in relation to the central extension plane and the heat transfer area has a heat transfer pattern of heat transfer projections (112) and heat transfer depressions (114) in relation to the central extension plane. The transition pattern differs from the distribution pattern and the heat transfer pattern. An imaginary straight line (92) extends between two end points (94 96) of each transition projection with an angle (a) in relation to the longitudinal center axis. This angle is varying between the transition projections and increasing in a direction from the first long side to the second long side.

No. of Pages : 27 No. of Claims : 14

(12) PATENT APPLICATION PUBLICATION
(19) INDIA
(22) Date of filing of Application :24/03/2015
(21) Application No.795/KOLNP/2015 A
(43) Publication Date : 25/12/2015

(54) Title of the invention : COMPRESSED AIR SUPPLY DEVICE AND METHOD FOR OPERATING A COMPRESSED AIR SUPPLY DEVICE

(51) International classification	:B60T13/66,B60T13/68,B60T17/00
(31) Priority Document No	:12188594.1
(32) Priority Date	:15/10/2012
(33) Name of priority country	:EPO
(86) International Application No	:PCT/EP2013/071241
Filing Date	:11/10/2013
(87) International Publication No	:WO 2014/060298
(61) Patent of Addition to Application Number	:NA
Filing Date	:NA
(62) Divisional to Application Number	:NA
Filing Date	:NA

(71)**Name of Applicant :**
1)KNORR BREMSE SYSTEME FÜR NUTZFAHRZEUGE GMBH
Address of Applicant :Moosacher Str. 80 80809 München Germany
(72)**Name of Inventor :**
1)KNORR BREMSE SYSTEME FÜR NUTZFAHRZEUGE GMBH

(57) Abstract :
The invention relates to a method (10) for operating a compressed air supply device (32) having a first valve unit (12) for pressurizing a compressor control port (14) via a compressor control line (16) a second valve unit (18) for opening a regeneration line (20) wherein the second valve unit (18) is connected to the compressor control line (16) and an unloader valve unit (22) for unloading a supply line (24) wherein a control port (26) of the unloader valve unit (22) is connected to the regeneration line (20). According to the invention the steps of pressurizing the compressor control port (14) opening the unloader valve unit (22) locking the unloader valve unit (22) and depressurizing the compressor control port (14) are contemplated. Further the present invention relates to a control unit for a compressed air supply device.

No. of Pages : 19 No. of Claims : 11

(12) PATENT APPLICATION PUBLICATION
(21) Application No.671/KOL/2014 A
(19) INDIA
(22) Date of filing of Application :20/06/2014
(43) Publication Date : 25/12/2015

(54) Title of the invention : 'AN IMPROVED TOOL HOLDER DEVICE ADAPTING A SQUARE SHAPED INSERT FOR EDGE PREPARATION OF RELIEF TUBES OF OUTLET HEADERS CONNECTED TO THE BIOLER DRUM IN HIGH PRESSURE BOILERS'

(51) International classification :G01F 23/00
(31) Priority Document No :NA
(32) Priority Date :NA
(33) Name of priority country :NA
(86) International Application No :NA
Filing Date :NA
(87) International Publication No : NA
(61) Patent of Addition to Application Number :NA
Filing Date :NA
(62) Divisional to Application Number :NA
Filing Date :NA

(71)**Name of Applicant :**
1)BHARAT HEAVY ELECTRICALS LIMITED
Address of Applicant :REGIONAL OPERATIONS DIVISION(ROD), PLOT NO:9/1, DJBLOCK 3RD FLOOR, KARUNAMOYEE,SALTLAKE CITY, KOLKATA-700091, HAVING ITS REGISTERED OFFICE AT BHEL HOUSE, SIRI FORT, NEW DELHI - 110049, INDIA. West Bengal
(72)**Name of Inventor :**
1)VIDYADHARI ARUN
2)VEERI CHETTY SHANMUGA SUBRAMANI
3)KARUPPAIYA MURUGESAN SURESH BABU
4)PALANIAPPAN RAMANATHAN
5)PANDIAN CHELLAPANDIAN
6)SANKAR HARISH
7)PERIAYAZHAGAN RENGASAMY

(57) Abstract :
The present invention relates to an improved cutting tool holder device having a cutting tool holder angle of 900, characterized in that the device is enabled to adapt a square insert having eight useful cutting edges, wherein the device allows edge preparation of boiler piping ranging from 88.9mm to 219.1mm outside diameter with thickness ranging from 5.49mm to 30mm.

No. of Pages : 9 No. of Claims : 3

(12) PATENT APPLICATION PUBLICATION
(19) INDIA
(22) Date of filing of Application :20/06/2014
(21) Application No.672/KOL/2014 A
(43) Publication Date : 25/12/2015

(54) Title of the invention : A PROCESS FOR PURIFICATION OF ABC BINDING PROTEIN OF AEROMONAS HYDROPHILA

(51) International classification	:C07K 14/00
(31) Priority Document No	:NA
(32) Priority Date	:NA
(33) Name of priority country	:NA
(86) International Application No	:NA
Filing Date	:NA
(87) International Publication No	: NA
(61) Patent of Addition to Application Number	:NA
Filing Date	:NA
(62) Divisional to Application Number	:NA
Filing Date	:NA

(71)**Name of Applicant :**
1)INDIAN COUNCIL OF AGRICULTURAL RESEARCH (ICAR)
Address of Applicant :UNIT CIFA CENTRAL INSTITUTE OF FRESHWATER AQUACULTURE, KAUSALYAGANGA, BHUBANESWAR-751002, INDIA Orissa
(72)**Name of Inventor :**
1)DR. B.K. DAS
2)PRAGYAN ROY
3)DEEPAK RANJAN SAHOO
4)DR. B. K. MISHRA
5)DR. M. SAMANTA
6)DR. P. JAYASANKAR

(57) Abstract :
A process for purification of ABC binding protein of Aeromonas hydrophila comprising; subjecting aeromonas hydrophila to the step of inoculation, separating the culture from the supernatant which is discarded, harvesting the inocubation cell the washing the suspension and suspending it in glycine hydrochloride (pH3), stirring the suspension of about 15 minutes at around 4°C removing the whole cells by centrifugation subjecting the supernatant to the step of dialysis to obtain the protein solution, treating the protein solution with buffer, subjecting the protein solution to the step of treatment in DEAE cellulose column with Buffer A & B, hydrophilizing the fractions obtained from the column.

No. of Pages : 18 No. of Claims : 7

(12) PATENT APPLICATION PUBLICATION
(19) INDIA
(22) Date of filing of Application :24/03/2015
(21) Application No.792/KOLNP/2015 A
(43) Publication Date : 25/12/2015

(54) Title of the invention : ROBOTIC DEVICE AND SYSTEMS FOR IMAGE GUIDED AND ROBOT ASSISTED SURGERY

(51) International classification :A61B19/00
(31) Priority Document No :61/692943
(32) Priority Date :24/08/2012
(33) Name of priority country :U.S.A.
(86) International Application No :PCT/US2013/056654
Filing Date :26/08/2013
(87) International Publication No :WO 2014/032046
(61) Patent of Addition to Application Number :NA
Filing Date :NA
(62) Divisional to Application Number :NA
Filing Date :NA

(71)**Name of Applicant :**
1)UNIVERSITY OF HOUSTON
Address of Applicant :316 E. Cullen Building Houston TX 77204 2015 U.S.A.
(72)**Name of Inventor :**
1)UNIVERSITY OF HOUSTON

(57) Abstract :
Provided herein are robotic systems for example MRI guided robots for image guided robot assisted surgical procedures and methods for using the same to perform such surgical procedures on a patient. The robotic systems comprise a robotic manipulator device or global positioner means for actuating the robotic manipulator or global positioner that is mechanically linked thereto and a computer having a memory a processor and at least one network connection in electronic communication with the robotic system. The actuating means comprises at least one transmission line having a flexible component comprising a displaceable medium a rigid component comprising rigid pistons or a combination through which actuation is transmitted to the robotic manipulator or global positioner. The computer tangibly stores in memory software modules comprising processor executable instructions to provide interfaces between the robotic system an imaging system and an operator and to control operation thereof.

No. of Pages : 114 No. of Claims : 46

(12) PATENT APPLICATION PUBLICATION
(19) INDIA
(22) Date of filing of Application :24/03/2015
(21) Application No.793/KOLNP/2015 A
(43) Publication Date : 25/12/2015

(54) Title of the invention : A PLATE HEAT EXCHANGER PLATE AND A PLATE HEAT EXCHANGER

(51) International classification :F28F3/08,F28F3/10,F28F9/00
(31) Priority Document No :12511937
(32) Priority Date :22/10/2012
(33) Name of priority country :Sweden
(86) International Application No :PCT/SE2013/051199
Filing Date :14/10/2013
(87) International Publication No :WO 2014/065742
(61) Patent of Addition to Application Number :NA
Filing Date :NA
(62) Divisional to Application Number :NA
Filing Date :NA

(71)**Name of Applicant :**
1)ALFA LAVAL CORPORATE AB
Address of Applicant :P. O. Box 73 SE 221 00 Lund Sweden
(72)**Name of Inventor :**
1)ALFA LAVAL CORPORATE AB

(57) Abstract :
A plate heat exchanger plate (10) ports (11 14) and between said ports (11 14) a heat transfer area (15) partly divided by a barrier (22). The heat exchanger plate (10) comprises a first port (11) a second port (12) a third port (13) and a fourth port (14). Further the heat exchanger plate (10) is provided with a first transition area (16) between the first and second ports (11 12) and the heat transfer area (15) and a second transition area (17) between the third and fourth ports (13 14) and the heat transfer area (15) the first and second transition areas (16 17) being provided with transition ports (18 19). The first transition area (16) is open towards the heat transfer area (15) and the second transition area (17) is separated from the heat transfer area (15) by a sealing (20).

No. of Pages : 26 No. of Claims : 15

(12) PATENT APPLICATION PUBLICATION
(21) Application No.339/KOL/2015 A
(19) INDIA
(22) Date of filing of Application :26/03/2015
(43) Publication Date : 25/12/2015

(54) Title of the invention : METHOD AND SYSTEM FOR TESTING CLOUD BASED APPLICATIONS AND SERVICES IN A PRODUCTION ENVIRONMENT USING SEGREATED BACKEND SYSTEMS

(51) International classification :G06F21/57
(31) Priority Document No :14/231,253
(32) Priority Date :31/03/2014
(33) Name of priority country :U.S.A.
(86) International Application No :NA
Filing Date :NA
(87) International Publication No : NA
(61) Patent of Addition to Application Number :NA
Filing Date :NA
(62) Divisional to Application Number :NA
Filing Date :NA

(71)**Name of Applicant :**
1)INTUIT INC.
Address of Applicant :2700 COAST AVENUE, MOUNTAIN VIEW, CA 94043 UNITED STATES OF AMERICA.
(72)**Name of Inventor :**
1)CAPEN BRINKLEY
2)JAVIER GODINEZ
3)THOMAS BISHOP
4)BRETT WEAVER
5)M. SHANNON LIETZ
6)LUIS FELIPE CABRERA

(57) Abstract :
An application is implemented in the production environment in which the application will be used. Two or more backend systems are provided. Actual user data is received. The actual user data is routed and processed in the production environment using a first backend system of the two or more backend systems. Fabricated user data is generated, routed, and also processed in the production environment but using a second backend system of the two or more backend systems. Results data from the processing of the fabricated user data is then analyzed to evaluate the production environment and/or operation of the application in the production environment.

No. of Pages : 48 No. of Claims : 36

(12) PATENT APPLICATION PUBLICATION
(21) Application No.357/KOL/2015 A
(19) INDIA
(22) Date of filing of Application :30/03/2015
(43) Publication Date : 25/12/2015

(54) Title of the invention : ORGANIC MATERIAL AND PHOTOELECTRIC CONVERSION ELEMENT

(51) International classification	:C09B23/00	(71)**Name of Applicant :**
(31) Priority Document No	:2014-075301	**1)RICOH COMPANY, LTD.**
(32) Priority Date	:01/04/2014	Address of Applicant :3-6, NAKAMAGOME 1-CHOME, OHTA-KU, TOKYO 143-8555 JAPAN
(33) Name of priority country	:Japan	**2)KYUSHU UNIVERSITY, NATIONAL UNIVERSITY CORPORATION**
(86) International Application No	:NA	
Filing Date	:NA	(72)**Name of Inventor :**
(87) International Publication No	: NA	**1)RYOTA ARAI**
(61) Patent of Addition to Application Number	:NA	**2)YU HIDAKA**
Filing Date	:NA	**3)WOONG SHIN**
(62) Divisional to Application Number	:NA	**4)CHIHAYA ADACHI**
Filing Date	:NA	**5)TAKUMA YASUDA**

(57) Abstract :
An organic material represented by the following Genaral Formula (1): <General Formula (1)> where in the General Formula (1), R1 and R2, which may be identical to or different from each other, each represent an alkyl group having 4 to 24 carbon atoms, X represents a substituted or unsubstituted aromatic hydrocarbon group, Y represents an aromatic hydrocarbon group, an alkoxyl group, or an alkyl group, which may be substituted with a substituent, and n represents an integer of 1 to 3.

No. of Pages : 56 No. of Claims : 11

(12) PATENT APPLICATION PUBLICATION
(21) Application No.804/KOLNP/2015 A
(19) INDIA
(22) Date of filing of Application :25/03/2015
(43) Publication Date : 25/12/2015

(54) Title of the invention : HEAT EXCHANGER PLATE AND PLATE HEAT EXCHANGER COMPRISING SUCH A HEAT EXCHANGER PLATE

(51) International classification	:F28F3/08,F28F3/04
(31) Priority Document No	:12190496.5
(32) Priority Date	:30/10/2012
(33) Name of priority country	:EPO
(86) International Application No	:PCT/EP2013/071150
Filing Date	:10/10/2013
(87) International Publication No	:WO 2014/067758
(61) Patent of Addition to Application Number	:NA
Filing Date	:NA
(62) Divisional to Application Number	:NA
Filing Date	:NA

(71)**Name of Applicant :**
1)ALFA LAVAL CORPORATE AB
Address of Applicant :P. O. Box 73 S 221 00 Lund Sweden
(72)**Name of Inventor :**
1)ALFA LAVAL CORPORATE AB

(57) Abstract :
A heat exchanger plate (4 6 8) and a plate heat exchanger (2) comprising such a heat exchanger plate is provided. The heat exchanger plate has a port hole (36 38 42 44) with a reference point (80) that coincides with a center point (C) of a biggest imaginary circle (82) that can be fitted into the port hole. The port hole is arranged within the left half and the upper half of the heat transfer plate and has a form defined by a number of corner points (66 68 70) of an imaginary plane geometric figure (72) of which at least one is displaced from an arc (92) of the circle and the same number of thoroughly curved lines (74 76 78) connecting the corner points. A first corner point (66) of the corner points is arranged closest to a transition (84) between a first short side and a first long side of he heat transfer plate and on a first distance (dl) from the reference point. A second corner point (68) of the corner points is arranged closest to the first corner point in a clockwise direction and on a second distance (d2) from the reference point. A third corner point (70) of the corner points is arranged closest to the first corner point in a counter clockwise direction and on a third distance (d3) from the reference point.

No. of Pages : 20 No. of Claims : 10

(12) PATENT APPLICATION PUBLICATION
(19) INDIA
(22) Date of filing of Application :25/03/2015
(21) Application No.805/KOLNP/2015 A
(43) Publication Date : 25/12/2015

(54) Title of the invention : A SYSTEM A USE OF SUCH A SYSTEM AND A MULTI SYSTEM FOR CLEANING EXHAUST GAS

(51) International classification :F01N3/04,B01D53/78,B01D53/14
(31) Priority Document No :12194809.5
(32) Priority Date :29/11/2012
(33) Name of priority country :EPO
(86) International Application No :PCT/EP2013/073098
Filing Date :06/11/2013
(87) International Publication No :WO 2014/082823
(61) Patent of Addition to Application Number :NA
Filing Date :NA
(62) Divisional to Application Number :NA
Filing Date :NA

(71)**Name of Applicant :**
1)ALFA LAVAL CORPORATE AB
Address of Applicant :P. O. Box 73 S 221 00 Lund Sweden
(72)**Name of Inventor :**
1)ALFA LAVAL CORPORATE AB

(57) Abstract :
The invention relates to a system (100 101) a use of such a system and a multi system (102 103) for cleaning exhaust gas (EG) from a combustion engine (2). The system comprises a first exhaust gas scrubber (1a) arranged to communicate with a scrubber water circulation tank (15). A first outlet (11) of the first exhaust gas scrubber is arranged to be connected to a first inlet (17) of the scrubber water circulation tank and a first inlet (21) of the first exhaust gas scrubber is arranged to be connected to a first outlet (20) of the scrubber water circulation tank to enable circulation of scrubber water between the scrubber water circulation tank (15) and the first exhaust gas scrubber (1a). The system (100 101) further comprises an air supply device (24) arranged to feed air into the first exhaust gas scrubber (1a) to aerate the scrubber water during its passage through the first exhaust gas scrubber (1a). Accordingly a second inlet (4) of the first exhaust gas scrubber is arranged to be connected to an outlet (12) of the air supply device (24).

No. of Pages : 25 No. of Claims : 12

(12) PATENT APPLICATION PUBLICATION
(19) INDIA
(22) Date of filing of Application :19/03/2015
(21) Application No.750/KOLNP/2015 A
(43) Publication Date : 25/12/2015

(54) Title of the invention : OPTICAL FIBRE CONNECTION HEAD OPTICAL FIBRE ADAPTOR AND OPTICAL FIBRE CONNECTOR

(51) International classification :G02B6/38
(31) Priority Document No :NA
(32) Priority Date :NA
(33) Name of priority country :NA
(86) International Application No :PCT/CN2013/086983
Filing Date :12/11/2013
(87) International Publication No :WO 2015/070382
(61) Patent of Addition to Application Number :NA
Filing Date :NA
(62) Divisional to Application Number :NA
Filing Date :NA

(71)**Name of Applicant :**
1)HUAWEI TECHNOLOGIES CO. LTD.
Address of Applicant :Huawei Administration Building Bantian Longgang Shenzhen Guangdong 518129 China
(72)**Name of Inventor :**
1)WU Wenxin
2)HUANG Xuesong

(57) Abstract :
An optical fibre connection head (100) comprising: an optical cable (110); an inner sleeve element (140) which is provided with a cavity therein; a fibre extending from the optical cable (110) being housed in the cavity with one end of the inner sleeve element (140) being fixed to the optical cable (110) and the other end thereof being provided with a sleeve (180); and an outer sleeve element (130) with the outer sleeve element (130) being provided at the outer side of the inner sleeve element (140) wherein at least a portion of the sleeve (180) of the inner sleeve element (140) protrudes from the outer sleeve element (130) and an opening is provided at the tail end of the sleeve (180) which protrudes from the outer sleeve element (130) so as to enable a tail end cross section of the sleeve (180) to be C shaped. With the above technical solutions the optical fibre connector provided in the embodiments of the present invention realizes the blind plugging of the above mentioned fibre connection heads by seamlessly connecting a sleeve with a C shaped opening in the optical fibre connection head to a C shaped plugging slot of the optical fibre adaptor and is easier in operation thus the optical fibre connector can achieve the goal of plug and play.

No. of Pages : 30 No. of Claims : 15

(12) PATENT APPLICATION PUBLICATION
(21) Application No.751/KOLNP/2015 A
(19) INDIA
(22) Date of filing of Application :19/03/2015
(43) Publication Date : 25/12/2015

(54) Title of the invention : CURRENCY OPERATED TIRE INFLATION AND REPAIR APPARATUS AND METHODS

(51) International classification :B60S5/04
(31) Priority Document No :61/710,649
(32) Priority Date :05/10/2012
(33) Name of priority country :U.S.A.
(86) International Application No :PCT/US2013/063746
Filing Date :07/10/2013
(87) International Publication No :WO 2014/055993
(61) Patent of Addition to Application Number :NA
Filing Date :NA
(62) Divisional to Application Number :NA
Filing Date :NA

(71)**Name of Applicant :**
1)PAASCH, Robert, W.
Address of Applicant :20705 Travis Rd., Wilder, ID 83676 UNITED STATES OF AMERICA.
(72)**Name of Inventor :**
1)PAASCH, Robert, W.

(57) Abstract :
The present disclosure provides tire repair assemblies that can include : a tire sealant tank; an air assembly coupled to the tire sealant tank; a valve configured to control flu id communication between the tank and the air assembly; and a currency operating assembly configured to control the valve. Methods for repairing tires are also provided with the methods including providing tire sealant to a tire from a tire repair assembly upon depositing currency in the tire repair assembly. A stand alone currency operated tire repair assemblies are also provided with the assemblies including : a tire sealant tank; an air compressor operatively coupled to the tank; a valve operatively aligned between the tank and the air compressor; a flow meter operatively aligned between the tank and the air compressor; and computer processing circuitry operatively coupled to the air compressor the valve and the flow meter.

No. of Pages : 16 No. of Claims : 20

(12) PATENT APPLICATION PUBLICATION
(19) INDIA
(22) Date of filing of Application :25/03/2015
(21) Application No.809/KOLNP/2015 A
(43) Publication Date : 25/12/2015

(54) Title of the invention : PORTAL AND METHOD FOR MANAGEMENT OF DIALYSIS THERAPY

(51) International classification :G01N33/48,G01N21/00
(31) Priority Document No :61/704,692
(32) Priority Date :24/09/2012
(33) Name of priority country :U.S.A.
(86) International Application No :PCT/US2013/061292
Filing Date :24/09/2013
(87) International Publication No :WO 2014/047608
(61) Patent of Addition to Application Number :NA
Filing Date :NA
(62) Divisional to Application Number :NA
Filing Date :NA

(71)**Name of Applicant :**
1)BRIGHAM AND WOMEN'S HOSPITAL, INC.
Address of Applicant :75 Francis Street, Boston, MA 02115 UNITED STATES OF AMERICA.
(72)**Name of Inventor :**
1)GURKAN, Umut, A.
2)DEMIRCI, Utkan
3)YELLIN, Derya, A.

(57) Abstract :
System and method for point-of-care monitoring of neutrophils in a peritoneal dialysis sample with the use of a microfluidic system. The immunoassay based chip is configured to bound neutrophils to a microfluidic channel surface while leaving auxiliary cells and particles unattached and suspended in the sample and flushable with a wash buffer. Data representing images of neutrophils, formed by an (optionally lensless) imaging system, are processed to determine a count of neutrophils based on statistical parameters including characteristics of the microfluidic channel.

No. of Pages : 42 No. of Claims : 12

(12) PATENT APPLICATION PUBLICATION
(19) INDIA
(22) Date of filing of Application :26/03/2015
(21) Application No.810/KOLNP/2015 A
(43) Publication Date : 25/12/2015

(54) Title of the invention : FLUOROMETHYL SUBSTITUTED PYRROLE CARBOXAMIDES

(51) International classification :C07D207/34,C07D401/06,C07D401/12
(31) Priority Document No :12006120.5
(32) Priority Date :29/08/2012
(33) Name of priority country :EPO
(86) International Application No :PCT/EP2013/002594
Filing Date :29/08/2013
(87) International Publication No :WO 2014/032801
(61) Patent of Addition to Application Number :NA
Filing Date :NA
(62) Divisional to Application Number :NA
Filing Date :NA

(71)**Name of Applicant :**
1)GRÜNENTHAL GMBH
Address of Applicant :Zieglerstrasse 6 52078 Aachen Germany
(72)**Name of Inventor :**
1)SCHUNK Stefan
2)REICH Melanie
3)STEINHAGEN Henning
4)DAMANN Nils
5)SKONE Philip
6)HAMLYN Richard
7)KIRBY Robert
8)ROGERS Marc
9)SUTTON Kathy

(57) Abstract :
The invention relates to pyrrole carboxamides bearing a fluoromethyl moiety as voltage gated calcium channel blockers to pharmaceutical compositions containing these compounds and also to these compounds for use in the treatment and/or prophylaxis of pain and further diseases and/or disorders.

No. of Pages : 194 No. of Claims : 15

(12) PATENT APPLICATION PUBLICATION
(21) Application No.345/KOL/2015 A
(19) INDIA
(22) Date of filing of Application :27/03/2015
(43) Publication Date : 25/12/2015

(54) Title of the invention : LIGHT EMITTING DIODE AND METHOD OF FABRICATING THE SAME

(51) International classification	:F21S2/00
(31) Priority Document No	:10-2014-0035925
(32) Priority Date	:27/03/2014
(33) Name of priority country	:Republic of Korea
(86) International Application No	:NA
Filing Date	:NA
(87) International Publication No	: NA
(61) Patent of Addition to Application Number	:NA
Filing Date	:NA
(62) Divisional to Application Number	:NA
Filing Date	:NA

(71)**Name of Applicant :**
1)SEOUL VIOSYS CO., LTD.
Address of Applicant :65-16, SANDAN-RO 163 BEON-GIL, DANWON-GU, ANSAN-SI, GYEONGGI-DO REPUBLIC OF KOREA
(72)**Name of Inventor :**
1)LEE, SO RA
2)JUNG, JAE HYE
3)KIM, CHANG YEON

(57) Abstract :
Embodiments provide a light emitting diode and a method of fabricating the same. The light emitting diode includes a base, a light emitting structure disposed on the base, a second electrode disposed under the light emitting structure; and at least one first electrode disposed on the light emitting structure, wherein the base includes a supporting insulator and at least one bulk electrode embedded in the supporting insulator and electrically connected to the light emitting structure, and a lower surface of the bulk electrode is exposed to a lower surface of the supporting insulator. The light emitting diode has excellent reliability and efficiency.

No. of Pages : 66 No. of Claims : 28

(12) PATENT APPLICATION PUBLICATION
(19) INDIA
(22) Date of filing of Application :31/03/2015
(21) Application No.362/KOL/2015 A
(43) Publication Date : 25/12/2015

(54) Title of the invention : AIR COMPRESSOR

(51) International classification :F04B39/12
(31) Priority Document No :103112756
(32) Priority Date :07/04/2014
(33) Name of priority country :Taiwan
(86) International Application No :NA
Filing Date :NA
(87) International Publication No : NA
(61) Patent of Addition to Application Number :NA
Filing Date :NA
(62) Divisional to Application Number :NA
Filing Date :NA

(71)**Name of Applicant :**
1)CHOU,WEN-SAN
Address of Applicant :NO.1-25,KANAGWEI, AN-DIN DIST,TAINAN CITY TAIWAN, R.O.C.
(72)**Name of Inventor :**
1)CHOU,WEN-SAN

(57) Abstract :
An air compressor includes a cylinder being fitted with a piston body and an air storage container formed integrally with the cylinder The air storage container defines therein an air chamber having a diameter greater than or equal to the inner space of the cylinder A pressure relieving mechanism is directly mounted to the air storage container rather than at one outlet provided at the air storage container, wherein one portion of the pressure relieving mechanism is located in the air chamber of the air storage container while the other portion of the pressure relieving mechanism extends out of the air storage container to be in contact with a push button provided on an external enclosure, whereby a user may depress the push button to reduce the air pressure within the air storage container.

No. of Pages : 32 No. of Claims : 9

(12) PATENT APPLICATION PUBLICATION
(19) INDIA
(22) Date of filing of Application :19/03/2015
(21) Application No.755/KOLNP/2015 A
(43) Publication Date : 25/12/2015

(54) Title of the invention : METHODS AND DEVICES FOR RADIO COMMUNICATION CONFIGURATION

(51) International classification :H04W8/24,H04W72/04
(31) Priority Document No :61/706431
(32) Priority Date :27/09/2012
(33) Name of priority country :U.S.A.
(86) International Application No :PCT/EP2013/063491
Filing Date :27/06/2013
(87) International Publication No :WO 2014/048596
(61) Patent of Addition to Application Number :NA
Filing Date :NA
(62) Divisional to Application Number :NA
Filing Date :NA

(71)**Name of Applicant :**
1)TELEFONAKTIEBOLAGET L M ERICSSON (PUBL)
Address of Applicant :SE 164 83 Stockholm Sweden
(72)**Name of Inventor :**
1)TELEFONAKTIEBOLAGET L M ERICSSON (PUBL)

(57) Abstract :
The teachings present a method 300 performed in a network node 201 for configuring a device 205 for radio communication in uplink and downlink between the network node 201 and the device 205. The method 300 comprises: configuring 301 500 the device 205 with a primary cell 403 on a first radio channel at a first carrier frequency fl with a first frequency bandwidth Bl for time division duplexed communication in uplink and downlink; configuring 301 500 the device 205 with a secondary cell 410 on a second radio channel at a second carrier frequency f3 with a second frequency bandwidth B3 wherein the secondary cell 410 is adjacent to the primary cell 403 and configured for downlink communication only; and configuring 303 the device 205 to support and to monitor the second radio channel the configuration comprising a priority list according to which the device 205 is to perform the monitoring. The teachings also disclose corresponding network node methods in a device and corresponding devices.

No. of Pages : 54 No. of Claims : 16

(12) PATENT APPLICATION PUBLICATION
(19) INDIA
(22) Date of filing of Application :26/03/2015
(21) Application No.813/KOLNP/2015 A
(43) Publication Date : 25/12/2015

(54) Title of the invention : ELECTRONIC SMOKE APPARATUS

(51) International classification :A24F47/00
(31) Priority Document No :12109815.0
(32) Priority Date :05/10/2012
(33) Name of priority country :Hongkong(China)
(86) International Application No :PCT/IB2013/059166
Filing Date :07/10/2013
(87) International Publication No :WO 2014/054035
(61) Patent of Addition to Application Number :NA
Filing Date :NA
(62) Divisional to Application Number :NA
Filing Date :NA

(71)**Name of Applicant :**
1)SMART CHIP MICROELECTRONIC CO. LIMITED
Address of Applicant :Unit A, 14/F, Hua Chiao Commercial Centre 678 Nathan Road Mongkok Kowloon HONG KONG, CHINA PEOPLE'S REPUBLIC OF CHINA
(72)**Name of Inventor :**
1)LIU, LOI YING

(57) Abstract :
An electronic smoke apparatus comprising an inhale sensor, a smoke source containing vapor-able smoke flavored substances, an electric heater for heating up the smoke flavored substances, and a power management controller to control power supply to operate the heater; wherein the power management controller is to adaptively supply operating power to the heater according to characteristics of a smoking inhaling event detected at said inhale sensor.

No. of Pages : 31 No. of Claims : 20

(12) PATENT APPLICATION PUBLICATION
(21) Application No.814/KOLNP/2015 A
(19) INDIA
(22) Date of filing of Application :26/03/2015
(43) Publication Date : 25/12/2015

(54) Title of the invention : METHOD FOR CONTROLLING A MINERAL MATERIAL PROCESSING PLANT AND A MINERAL MATERIAL PROCESSING PLANT

(51) International classification	:B02C25/00
(31) Priority Document No	:20126110
(32) Priority Date	:26/10/2012
(33) Name of priority country	:Finland
(86) International Application No	:PCT/FI2013/051002
Filing Date	:23/10/2013
(87) International Publication No	:WO 2014/064336
(61) Patent of Addition to Application Number	:NA
Filing Date	:NA
(62) Divisional to Application Number	:NA
Filing Date	:NA

(71)**Name of Applicant :**
1)METSO MINERALS, INC.
Address of Applicant :Fabianinkatu 9 A, FI-00130 Helsinki FINLAND
(72)**Name of Inventor :**
1)PERMI, SAMI
2)TIRRANEN, JUHO

(57) Abstract :
A mineral material processing plant (100) and a method for controlling thereof. The mineral material processing plant comprises at least one motor (104), at least one actuator, a control system (110), an arrangement for holding the operating speed of said at least one actuator substantially unchanged. The control system is configured to control the processing plant in such a way that a change of amount and/or quality of material arriving to be processed is recognized and in response to the recognized change of amount and/or quality of the material arriving to be processed, the load of a motor (104) is recognized, and in response to the recognized load of the motor (104), the running speed of the motor (104) or motors of the mineral material processing plant is increased or decreased (100) so that the operating speed of at least one actuator is held substantially unchanged.

No. of Pages : 23 No. of Claims : 17

(12) PATENT APPLICATION PUBLICATION
(19) INDIA
(22) Date of filing of Application :09/06/2012
(21) Application No.1410/KOLNP/2012 A
(43) Publication Date : 25/12/2015

(54) Title of the invention : COSMETIC PREPARATION FOR HAIR AND METHOD FOR APPLICATION THEREOF

(51) International classification :A61K 8/00
(31) Priority Document No :2009-260490
(32) Priority Date :13/11/2009
(33) Name of priority country :Japan
(86) International Application No :PCT/JP2010/070112
Filing Date :11/11/2010
(87) International Publication No : NA
(61) Patent of Addition to Application Number :NA
Filing Date :NA
(62) Divisional to Application Number :NA
Filing Date :NA

(71)**Name of Applicant :**
1)HOYU CO. LTD.
Address of Applicant :501 Tokugawa 1-chome Higashi-ku Nagoya-shi Aichi 461-8650 Japan
(72)**Name of Inventor :**
1)KONNO Yoshihiro
2)KOBAYASHI Yosuke

(57) Abstract :
A hair cosmetic composition to be used for dyeing or bleaching hair or for removing dye from hair is applied to the hair in a foamy form obtained by mixing a powdery agent and a liquid agent and foaming the mixture by shaking.

No. of Pages : 117 No. of Claims : 13

(12) PATENT APPLICATION PUBLICATION
(21) Application No.317/KOL/2015 A
(19) INDIA
(22) Date of filing of Application :24/03/2015
(43) Publication Date : 25/12/2015

(54) Title of the invention : POWER CONVERTER, POWER GENERATION SYSTEM, CONTROL APPARATUS, AND POWER CONVERSION METHOD

(51) International classification	:H02M3/00
(31) Priority Document No	:2014-072400
(32) Priority Date	:31/03/2014
(33) Name of priority country	:Japan
(86) International Application No	:NA
Filing Date	:NA
(87) International Publication No	: NA
(61) Patent of Addition to Application Number	:NA
Filing Date	:NA
(62) Divisional to Application Number	:NA
Filing Date	:NA

(71)**Name of Applicant :**
1)KABUSHIKI KAISHA YASKAWA DENKI
Address of Applicant :2-1, KUROSAKI-SHIROISHI, YAHATANISHI-KU, KITAKYUSHU-SHI, FUKUOKA 806-0004 JAPAN
(72)**Name of Inventor :**
1)KOZO IDE
2)TETSUMI NARITA
3)SEIJI FUJISAKI
4)MAMORU TAKAKI
5)SHINYA MORIMOTO

(57) Abstract :
A power converter according to embodiments includes a boost circuit, a single-phase inverter, a current controller, and a power conversion controller. The current controller generates a voltage reference based on a difference between current output from the single-phase inverter and a current reference. The power conversion controller controls the single-phase inverter to generate a first portion of the AC voltage, and controls the boost circuit to generate a second portion of the AC voltage. The first portion corresponds to the voltage reference of which an absolute value is smaller than the voltage of the DC power supply. The second portion corresponds to the voltage reference of which an absolute value is greater than the voltage of the DC power supply.

No. of Pages : 62 No. of Claims : 12

(12) PATENT APPLICATION PUBLICATION
(19) INDIA
(22) Date of filing of Application :31/03/2015
(21) Application No.369/KOL/2015 A
(43) Publication Date : 25/12/2015

(54) Title of the invention : AIR COMPRESSOR

(51) International classification :F04B39/12
(31) Priority Document No :103112755
(32) Priority Date :07/04/2014
(33) Name of priority country :Taiwan
(86) International Application No :NA
Filing Date :NA
(87) International Publication No : NA
(61) Patent of Addition to Application Number :NA
Filing Date :NA
(62) Divisional to Application Number :NA
Filing Date :NA

(71)**Name of Applicant :**
1)CHOU, WEN-SAN
Address of Applicant :NO. 1-25, KANGWEI, AN-DIN DIST, TAINAN CITY TAIWAN, R.O.C. Taiwan
(72)**Name of Inventor :**
1)CHOU,WEN-SAN

(57) Abstract :
An air compressor includes an air storage container, a cylinder fitted with a piston body and a main frame for mounting a motor. The cylinder and the main frame are integrally formed of plastic. The air storage container is detachably mounted to the cylinder. The main frame is provided with though holes for guiding the air flow, generated by a cooling fan, to flow through the main frame. The main frame is formed with two lateral walls and a bottom wall to form a U-shaped wind collecting shell. The second portion of the main frame is held by multiple radial braces, which facilitates the air flow being introduced through the main frame for rapidly dissipating the heat generated from the reciprocating motion of the piston body, so that the operational security can be increased. The non-metal air compressor may lead to a reduction of the manufacturing cost and the weight.

No. of Pages : 45 No. of Claims : 10

(12) PATENT APPLICATION PUBLICATION
(21) Application No.760/KOLNP/2015 A
(19) INDIA
(22) Date of filing of Application :19/03/2015
(43) Publication Date : 25/12/2015

(54) Title of the invention : METHOD AND DEVICE FOR PROCESSING STACKS OF BAGS

(51) International classification :B65B43/18
(31) Priority Document No :10 2012 018 769.6
(32) Priority Date :24/09/2012
(33) Name of priority country :Germany
(86) International Application No :PCT/EP2013/002837
Filing Date :20/09/2013
(87) International Publication No :WO 2014/044398
(61) Patent of Addition to Application Number :NA
Filing Date :NA
(62) Divisional to Application Number :NA
Filing Date :NA

(71)**Name of Applicant :**
1)HAVER & BOECKER OHG
Address of Applicant :Carl Haver Platz 3 59302 Oelde Germany
(72)**Name of Inventor :**
1)HAVER & BOECKER OHG

(57) Abstract :
The invention relates to a processing device and a method for processing a stack of bags consisting of a plurality of bags wherein a deposition device is provided on which the stack of bags is deposited in a base position. The bags in the stack of bags have a bag length and a bag width. A centring device is provided which comprises two oppositely arranged centring units which are arranged so as to be relatively movable toward one another and away from one another by means of a drive device.

No. of Pages : 41 No. of Claims : 16

(12) PATENT APPLICATION PUBLICATION
(19) INDIA
(22) Date of filing of Application :27/03/2015
(21) Application No.817/KOLNP/2015 A
(43) Publication Date : 25/12/2015

(54) Title of the invention : METHODS FOR DETERMINING WHETHER A PATENT SHOULD BE ADMINISTERED A DRUG THAT INHIBITS CHOLESTEROL ABSORPTION

(51) International classification :C12Q1/60
(31) Priority Document No :61706,638
(32) Priority Date :27/09/2012
(33) Name of priority country :U.S.A.
(86) International Application No :PCT/US2013/062241
Filing Date :27/09/2013
(87) International Publication No :WO 2014/052790
(61) Patent of Addition to Application Number :NA
Filing Date :NA
(62) Divisional to Application Number :NA
Filing Date :NA

(71)**Name of Applicant :**
1)BOSTON HEART DIAGNOSTICS CORPORATION
Address of Applicant :175 CROSSING BOULEVARD, FRAMINGHAM, MA 01702 UNITED STATES OF AMERICA.
(72)**Name of Inventor :**
1)SCHAEFER, ERNST, J.

(57) Abstract :
The invention generally relates to methods for determining whether a patient should be administered a drug that inhibits cholesterol absorption. In certain aspects, methods of the invention involve obtaining a sample from a patient, conducting an assay on the sample to obtain a level of a cholesterol absorption marker, and comparing the level to a reference level, in which a level above the reference level indicates that the patient should be administered a drug that inhibits cholesterol absorption.

No. of Pages : 52 No. of Claims : 24

(12) PATENT APPLICATION PUBLICATION
(21) Application No.3014/KOLNP/2012 A
(19) INDIA
(22) Date of filing of Application :13/10/2012
(43) Publication Date : 25/12/2015

(54) Title of the invention : MELAMINE DECORATIVE BOARD

(51) International classification :B32B27/00
(31) Priority Document No :2010-065697
(32) Priority Date :23/03/2010
(33) Name of priority country :Japan
(86) International Application No :PCT/JP2011/052979
Filing Date :14/02/2011
(87) International Publication No :WO/2011/118284
(61) Patent of Addition to Application Number :NA
Filing Date :NA
(62) Divisional to Application Number :NA
Filing Date :NA

(71)**Name of Applicant :**
1)AICA KOGYO CO. LTD.
Address of Applicant :2288 Nishihorie Kiyosu-shi Aichi 452-0917 Japan
(72)**Name of Inventor :**
1)MIYAZAKI Nobumitsu
2)OGINO Tomoya
3)SUZUKI Koushi
4)KODERA Koutarou

(57) Abstract :
Provided is a decorative melamine board having a milky white core and minimal warp. When bonded to a substrate, such as plywood, particle board, or a steel plate, the tone of the substrate does not show through to the decorative layer. The decorative melamine board is formed by laminating and heat molding: a resin-impregnated patterned paper as a decorative layer; a resin-impregnated core of multiple sheets of paper as a core layer, in which a whitish fibrous base material is impregnated with a resin solution to which a condensation product of melamine and formaldehyde, and a divalent polyalkylene glycol or derivative thereof, or a trivalent (or higher valence) polyalkylene glycol ether have been added, and then dried; and a resin-impregnated underside paper as an underside layer, in which a fibrous base material is impregnated with a condensation product of melamine and formaldehyde, and then dried.

No. of Pages : 19 No. of Claims : 6

(12) PATENT APPLICATION PUBLICATION
(19) INDIA
(22) Date of filing of Application :20/03/2015
(21) Application No.765/KOLNP/2015 A
(43) Publication Date : 25/12/2015

(54) Title of the invention : METHOD FOR PRODUCING RETINAL PIGMENT EPITHELIAL CELL SHEET

(51) International classification :C12N5/10,A61K35/44,A61L27/00
(31) Priority Document No :2012185932
(32) Priority Date :24/08/2012
(33) Name of priority country :Japan
(86) International Application No :PCT/JP2013/072589
Filing Date :23/08/2013
(87) International Publication No :WO 2014/030749
(61) Patent of Addition to Application Number :NA
Filing Date :NA
(62) Divisional to Application Number :NA
Filing Date :NA

(71)**Name of Applicant :**
1)RIKEN
Address of Applicant :2 1 Hirosawa Wako shi Saitama 3510198 Japan
(72)**Name of Inventor :**
1)RIKEN

(57) Abstract :
in vitroThe invention provides a method for producing a cell sheet including a retinal pigment epithelial cell layer and an angiogenic cell layer the method including a step for laminating a retinal pigment epithelial cell layer and an angiogenic cell layer constructed of blood vessel component cells or stem cells having angiogenic potency; and provides a cell sheet obtained by this method. The invention also provides a cell sheet for transplantation including a cell layer formed by retinal pigment epithelial cells obtained by inducing differentiation of stem cells or progenitor cells a basement membrane secreted from these cells and an angiogenic cell layer constructed of blood vessel component cells or stem cells having angiogenic potency.

No. of Pages : 57 No. of Claims : 8

(12) PATENT APPLICATION PUBLICATION
(19) INDIA
(22) Date of filing of Application :20/03/2015
(21) Application No.766/KOLNP/2015 A
(43) Publication Date : 25/12/2015

(54) Title of the invention : METHODS, SYSTEMS, AND COMPUTER READABLE MEDIA FOR ADAPTIVE OUT OF STEP PROTECTION FOR POWER GENERATORS WITH LOAD RESYNCHRONIZATION CAPABILITY

(51) International classification :H02P9/00
(31) Priority Document No :NA
(32) Priority Date :NA
(33) Name of priority country :NA
(86) International Application No :PCT/CN2012/082627
Filing Date :09/10/2012
(87) International Publication No :WO 2014/056144
(61) Patent of Addition to Application Number :NA
Filing Date :NA
(62) Divisional to Application Number :NA
Filing Date :NA

(71)**Name of Applicant :**
1)ABB RESEARCH LTD.
Address of Applicant :Affolternstrasse 44, CH-8050 Zurich SWITZERLAND
(72)**Name of Inventor :**
1)NUQUI, Reynaldo
2)CHEN, Yao
3)PAN, Jiuping

(57) Abstract :
Methods, systems, and computer readable media for adaptive out of step protection for power generators with load resynchronization capability are disclosed. According to one method, when a fault condition occurs in a load being supplied by a power generator, a number of pole slips expected to occur in the generator due to the fault before resynchronization is estimated. It is determined whether the estimated number of pole slips exceeds a threshold. An offline or online status of the generator is controlled based on the determination as to whether the estimated number of pole slips exceeds the threshold.

No. of Pages : 28 No. of Claims : 20

(12) PATENT APPLICATION PUBLICATION
(19) INDIA
(22) Date of filing of Application :30/03/2015
(21) Application No.825/KOLNP/2015 A
(43) Publication Date : 25/12/2015

(54) Title of the invention : METHOD FOR OPERATING AN ELECTRICALLY OPERABLE PARKING BRAKE SYSTEM AND CONTROL DEVICE OF AN ELECTRICALLY OPERABLE PARKING BRAKE SYSTEM

(51) International classification :B60T7/12,B60T13/66,B60T17/18
(31) Priority Document No :12188588.3
(32) Priority Date :15/10/2012
(33) Name of priority country :EPO
(86) International Application No :PCT/EP2013/071240
Filing Date :11/10/2013
(87) International Publication No :WO 2014/060297
(61) Patent of Addition to Application Number :NA
Filing Date :NA
(62) Divisional to Application Number :NA
Filing Date :NA

(71)**Name of Applicant :**
1)KNORR BREMSE SYSTEME FÜR NUTZFAHRZEUGE GMBH
Address of Applicant :Moosacher Str. 80 80809 München Germany
(72)**Name of Inventor :**
1)BALOGH Levente
2)BORDACS Zoltan

(57) Abstract :
The present invention relates to a method (200) for operating an electrically operable parking brake system (100) of a vehicle (104). According to the invention it is contemplated that a transfer of the electrically operable parking brake system (100) from a released operating state into an applied operating state is initiated and a predeterminable waiting time period is started when the presence of a trigger event is detected which is independent of an operating device (130) provided for manually operating the electrically operable parking brake system (100) and/or used to release the parking brake system (100) when an operating device (130) is faulty. The present invention further relates to a control device for an electrically operable parking brake system.

No. of Pages : 26 No. of Claims : 13

(12) PATENT APPLICATION PUBLICATION
(19) INDIA
(22) Date of filing of Application :19/03/2015
(21) Application No.761/KOLNP/2015 A
(43) Publication Date : 25/12/2015

(54) Title of the invention : METHOD FOR OPERATING AN ELECTRICALLY OPERABLE PARKING BRAKE SYSTEM AND CONTROL DEVICE OF AN ELECTRICALLY OPERABLE PARKING BRAKE SYSTEM

(51) International classification :B60T7/12,B60T13/66,B60T17/18
(31) Priority Document No :12188589.1
(32) Priority Date :15/10/2012
(33) Name of priority country :EPO
(86) International Application No :PCT/EP2013/071232
Filing Date :11/10/2013
(87) International Publication No :WO 2014/060295
(61) Patent of Addition to Application Number :NA
Filing Date :NA
(62) Divisional to Application Number :NA
Filing Date :NA

(71)**Name of Applicant :**
1)KNORR BREMSE SYSTEME FÜR NUTZFAHRZEUGE GMBH
Address of Applicant :Moosacher Str. 80 80809 München Germany
(72)**Name of Inventor :**
1)KNORR BREMSE SYSTEME FÜR NUTZFAHRZEUGE GMBH

(57) Abstract :
The invention relates to a method (200) for operating of an electrically operable parking brake system (100) of a vehicle (104). According to the invention it is contemplated that a transfer of the electrically operable parking brake system (100) from an applied operating state into a released operating state is initiated when the presence of a starting condition is detected which is independent of an operating device (130) provided for manually operating the electrically operable parking brake system (100) and/or used to release the parking brake system (100) when the operating device (130) is faulty. The present invention further relates to a control device for an electrically operable parking brake system (100).

No. of Pages : 28 No. of Claims : 15

(12) PATENT APPLICATION PUBLICATION
(21) Application No.762/KOLNP/2015 A
(19) INDIA
(22) Date of filing of Application :19/03/2015
(43) Publication Date : 25/12/2015

(54) Title of the invention : CORRECTION METHOD DEVICE AND SYSTEM FOR TRANSCEIVING CHANNEL RESPONSE AND BASEBAND UNIT

(51) International classification :H04B7/005
(31) Priority Document No :201210345419.1
(32) Priority Date :17/09/2012
(33) Name of priority country :China
(86) International Application No :PCT/CN2012/087409
Filing Date :25/12/2012
(87) International Publication No :WO 2014/040354
(61) Patent of Addition to Application Number :NA
Filing Date :NA
(62) Divisional to Application Number :NA
Filing Date :NA

(71)**Name of Applicant :**
1)HUAWEI TECHNOLOGIES CO. LTD.
Address of Applicant :Huawei Administration Building Bantian Longgang Shenzhen Guangdong 518129 China
(72)**Name of Inventor :**
1)HUAWEI TECHNOLOGIES CO. LTD.

(57) Abstract :
Disclosed are a correction method device and system for a transceiving channel response. The method comprises: a first baseband module taking a first transceiving channel as a reference correction channel in a first radio frequency module and correcting the channel response ratio of each group of transceiving channels in the first radio frequency module to be consistent with the channel response ratio of the first transceiving channel; and the first baseband module taking the first transceiving channel and a second transceiving channel as the correction channels between the first radio frequency module and a second radio frequency module and correcting the channel response ratio of the second transceiving channel to be consistent with the channel response ratio of the first transceiving channel. The application of the embodiments of the present invention realizes channel response correction of the transceiving channels among coordinated radio frequency modules so that when the coordinated radio frequency modules transmit downlink signals to a UE the channel response ratio among transceiving channels of different radio frequency modules is the same thus the signal quality is improved during inter cell coordinated transmission of signals thereby improving the JT performance of the system.

No. of Pages : 53 No. of Claims : 24

(12) PATENT APPLICATION PUBLICATION
(19) INDIA
(22) Date of filing of Application :27/03/2015
(21) Application No.821/KOLNP/2015 A
(43) Publication Date : 25/12/2015

(54) Title of the invention : DRIP IRRIGATION PIPE COMPRISING A POLYMER COMPOSITION COMPRISING A MULTIMODAL POLYETHYLENE BASE RESIN

(51) International classification :C08L23/08,A01G25/02,C08L23/00
(31) Priority Document No :12007620.3
(32) Priority Date :09/11/2012
(33) Name of priority country :EPO
(86) International Application No :PCT/EP2013/003352
Filing Date :07/11/2013
(87) International Publication No :WO 2014/072057
(61) Patent of Addition to Application Number :NA
Filing Date :NA
(62) Divisional to Application Number :NA
Filing Date :NA

(71)**Name of Applicant :**
1)BOREALIS AG
Address of Applicant :IZD Tower, Wagramer Straße 17-19, A-1220 Wien AUSTRIA
2)ABU DHABI POLYMERS CO LTD (BOROUGE) L.L.C
(72)**Name of Inventor :**
1)MOTHA, KSHAMA
2)NILSSON, ANETTE
3)NIKHADE, PRASHANT
4)DASGUPTA, CHANCHAL
5)ASTING, JOHAN

(57) Abstract :
Drip irrigation pipe provided with perforations in the pipe wall for discharging water, which perforations are arranged at intervals along the length of the pipe, wherein the pipe comprises a polymer composition as defined in claims, a process for producing said pipe, pellets of said polymer composition and the use of said polymer composition for producing a drip irrigation pipe.

No. of Pages : 45 No. of Claims : 14

(12) PATENT APPLICATION PUBLICATION
(19) INDIA
(22) Date of filing of Application :27/03/2015
(21) Application No.822/KOLNP/2015 A
(43) Publication Date : 25/12/2015

(54) Title of the invention : SYSTEM FOR PROCESSING LIQUEFIED GAS ON VESSEL

(51) International classification	:F02M21/02,B63H21/38,F02M37/04
(31) Priority Document No	:10-2012-0118241
(32) Priority Date	:24/10/2012
(33) Name of priority country	:Republic of Korea
(86) International Application No	:PCT/KR2013/009541
Filing Date	:24/10/2013
(87) International Publication No	:WO 2014/065619
(61) Patent of Addition to Application Number	:NA
Filing Date	:NA
(62) Divisional to Application Number	:NA
Filing Date	:NA

(71)**Name of Applicant :**
1)DAEWOO SHIPBUILDING & MARINE ENGINEERING CO. LTD.
Address of Applicant :85, Da-dong, Jung-gu, Seoul 100-180 REPUBLIC OF KOREA
(72)**Name of Inventor :**
1)LEE, JOON CHAE
2)CHOI, DONG KYU
3)MOON, YOUNG SIK
4)JUNG, JEHEON

(57) Abstract :
Disclosed is a system for processing liquefied gas on a vessel, the system having a storage tank for storing LNG, and main and auxiliary engines using the LNG stored in the storage tank as fuel. The system for processing liquefied gas comprises: a BOG main supply line for supplying, to the main engine as fuel, BOG generated in the storage tank and compressed by a compressor; a BOG auxiliary supply line for for supplying, as fuel to the auxiliary engine, the BOG generated in the storage tank and compressed by the compressor; an LNG main supply line for supplying, as fuel to the main engine, the LNG stored in the storage tank and compressed by a pump; and an LNG auxiliary supply line for supplying as fuel, to the auxiliary engine, the LNG stored in the storage tank and compressed by the pump. The fuel supplied to the main engine is compressed to 150-400 bara.

No. of Pages : 57 No. of Claims : 13

(12) PATENT APPLICATION PUBLICATION
(19) INDIA
(22) Date of filing of Application :19/03/2015
(21) Application No.298/KOL/2015 A
(43) Publication Date : 25/12/2015

(54) Title of the invention : POLYAMIDE MOULDING COMPOSITION, IN PARTICULAR FOR THE PRODUCTION OF MOULDINGS IN THE DRINKING WATER SECTOR

(51) International classification :C08L77/02
(31) Priority Document No :14 162 997.2
(32) Priority Date :01/04/2014
(33) Name of priority country :EPO
(86) International Application No :NA
Filing Date :NA
(87) International Publication No : NA
(61) Patent of Addition to Application Number :NA
Filing Date :NA
(62) Divisional to Application Number :NA
Filing Date :NA

(71)**Name of Applicant :**
1)EMS-PATENT AG
Address of Applicant :VIA INNOVATIVA 1 7013 DOMAT/EMS SWITZERLAND
(72)**Name of Inventor :**
1)HEWEL MANFRED

(57) Abstract :
A polyamide moulding composition in particular for use for components in the drinking water sector, made of the following constituents: (A) from 25 to 74.9% by weight of at least one semicrystalline, semiaromatic nylon- 6,T/6,I, composed of: (a1) from 65 to 82 mol% of terephthalic acid, based on the entirety of the dicarboxylic acids used; (a2) from 18 to 35 mol% of isophthalic acid, based on the entirety of the dicarboxylic acids used; (a3) 1,6-diaminohexane; (a4) at least one monobasic carboxylic acid; (a5) a phosphorus compound; with the first proviso that the molar ratio of the component (a3) to the entirety of the dicarboxylic acids used ((a1) + (a2)) is at least 1.04 and at most 1.15; and with the second proviso that the molar ratio of the component (a4) to the component (a3) is in the range from 0.01 to 0.08; (B) from 25 to 60% by weight of fibrous reinforcing materials; (C) from 0 to 30% by weight of particulate fillers; (D) from 0.1 to 2.0% by weight of heat stabilizers, with the proviso that no copper- containing stabilizers are present therein; (E) from 0 to 2% by weight of carbon black; (F) from 0 to 4% by weight of auxiliaries and/or additives differing from C, D and E; where the entirety of the components (A)-(F) makes up 100% by weight.

No. of Pages : 31 No. of Claims : 15

(12) PATENT APPLICATION PUBLICATION
(19) INDIA
(22) Date of filing of Application :20/03/2015
(21) Application No.770/KOLNP/2015 A
(43) Publication Date : 25/12/2015

(54) Title of the invention : SEAT FRAME FOR VEHICLE SEAT

(51) International classification :B60N2/68,B60N2/10,B60N2/64
(31) Priority Document No :NA
(32) Priority Date :NA
(33) Name of priority country :NA
(86) International Application No:PCT/JP2012/072245
Filing Date :31/08/2012
(87) International Publication No :WO 2014/033929
(61) Patent of Addition to Application Number :NA
Filing Date :NA
(62) Divisional to Application Number :NA
Filing Date :NA

(71)**Name of Applicant :**
1)TS TECH CO., LTD.
Address of Applicant :7-27, Sakaecho 3-chome, Asaka-shi, Saitama 3510012 JAPAN
(72)**Name of Inventor :**
1)FUJITA, Satoshi
2)ITOI, Hiroyuki

(57) Abstract :
The present invention improves rigidity to the extent that side frames are prevented from falling inward in a structure for connecting the bottom ends of the side frames by means of a connection frame. A seat frame (F) for a vehicle seat (S), the seat frame (F) having side frames (11) disposed on both ends of a seat back frame (F1) in the width direction, and a bottom member frame (31) for connecting the bottom ends of the side frames (11) which attach to a seat cushion (S2), wherein: each side frame (11) has a side wall (12) which is positioned on the outside in the width direction and which extends in the vertical direction, and a back wall (13) which extends from the side wall (12) towards the inner side in the width direction; and the lower member frame (31) has a first extension part (32) extending along the width direction, and second extension parts (33) extending from both ends of the first extension part (32) in the width direction towards the front. The second extension parts (33) are positioned further inward than the side walls (12) in the width direction and overlap with the side walls (12).

No. of Pages : 54 No. of Claims : 9

(12) PATENT APPLICATION PUBLICATION
(21) Application No.827/KOLNP/2015 A
(19) INDIA
(22) Date of filing of Application :30/03/2015
(43) Publication Date : 25/12/2015

(54) Title of the invention : UREA AND AMIDE DERIVATIVES OF AMINOALKYLPIPERAZINES AND USE THEREOF

(51) International classification :A61K31/497
(31) Priority Document No :61/712,333
(32) Priority Date :11/10/2012
(33) Name of priority country :U.S.A.
(86) International Application No :PCT/US2013/064524
Filing Date :11/10/2013
(87) International Publication No :WO 2014/059265
(61) Patent of Addition to Application Number :NA
Filing Date :NA
(62) Divisional to Application Number :NA
Filing Date :NA

(71)**Name of Applicant :**
1)SOUTHERN RESEARCH INSTITUTE
Address of Applicant :Office Of Commercialization And, Intellectual Property, 2000 9th Avenue South P.o. Box 55305, Birmingham, AL 35205-5305 UNITED STATES OF AMERICA.
(72)**Name of Inventor :**
1)ANANTHAN, SUBRAMANIAM

(57) Abstract :
Provided are compounds represented by the formula: with Y, Ri, and R2 being defined in the present disclosure; pharmaceutically acceptable salts thereof, deuterated forms thereof, isomers thereof, solvates thereof, and mixtures thereof. The compounds can be used for treating a patient suffering from a condition capable of treatment with a partial agonist or antagonist of the dopamine D2/D3 receptors and are especially useful for patients suffering from schizophrenia, depressions, neurodegenerative diseases such as Parkinsons, dyskinesias, substance abuse and relapse to substance abuse and addiction to substances such as cocaine, methamphetamine, nicotine and alcohol, glaucoma, cognitive disorders, restless leg syndrome, attention deficit hyperactivity disorders, hyperprolactinemia, autism, motor disturbances such as akathisia, rigor, dystonias as well as various disorders of the urinary tract and other neurologic disorders. Also provided are processes for the preparation of compounds of the present disclosure.

No. of Pages : 119 No. of Claims : 8

(12) PATENT APPLICATION PUBLICATION
(19) INDIA
(22) Date of filing of Application :19/03/2015
(21) Application No.758/KOLNP/2015 A
(43) Publication Date : 25/12/2015

(54) Title of the invention : CONTAINER CAP USING BOTTOM GASKET TO ACCOMMODATE AND DISCHARGE ADDITIVES

(51) International classification	:B65D51/28,B65D25/08,B65D81/32
(31) Priority Document No	:10-2012-0090975
(32) Priority Date	:20/08/2012
(33) Name of priority country	:Republic of Korea
(86) International Application No	:PCT/KR2013/002515
Filing Date	:27/03/2013
(87) International Publication No	:WO 2014/030818
(61) Patent of Addition to Application Number	:NA
Filing Date	:NA
(62) Divisional to Application Number	:NA
Filing Date	:NA

(71)**Name of Applicant :**
1)JCTECH CO., LTD.
Address of Applicant :57B 6L Namdong Industrial Complex, 17 Hoguporo, Namdong-gu, Incheon 405-822 REPUBLIC OF KOREA
(72)**Name of Inventor :**
1)CHO, YOUNGKOOK
2)PARK, JEONGOOG

(57) Abstract :
The present invention is a container closure using a bottom gasket to accommodate and discharge additives, comprising: a storage member (520) which serves as a lower cap having an outlet port (526a) formed in the lower side surface of a tubular inner cap (526) arranged inside the entrance of a container (510) in a main cap (524) coupled to the entrance of the container (510); an opening member (530) which has a slider (536) serving as a container for an additive and sliding in the vertical direction in the inner cap (526), and which is coupled to an extended tube (527) extending upwardly from the main cap (524); a bottom gasket (550) which closes the lower end and inner surface of the slider (536), which is hooked onto the storage member (520), and which is separated from the slider (536) when separating the opening member (530); and a bottom inner cap (560) which is integrally formed with the lower end of the outlet port (526a), and which tightly seals the outer surface, the bottom surface, and the inner surface of the bottom gasket (550) at the same time.

No. of Pages : 40 No. of Claims : 9

(12) PATENT APPLICATION PUBLICATION
(19) INDIA
(22) Date of filing of Application :19/03/2015
(21) Application No.759/KOLNP/2015 A
(43) Publication Date : 25/12/2015

(54) Title of the invention : AIR CONDITIONING INDOOR MACHINE

(51) International classification :F24F1/00,F24F13/20,F24F13/14
(31) Priority Document No :NA
(32) Priority Date :NA
(33) Name of priority country :NA
(86) International Application No :PCT/CN2012/080670
Filing Date :28/08/2012
(87) International Publication No:WO 2014/032229
(61) Patent of Addition to Application Number :NA
Filing Date :NA
(62) Divisional to Application Number :NA
Filing Date :NA

(71)**Name of Applicant :**
1)GD MIDEA AIR CONDITIONING EQUIPMENT CO. LTD.
Address of Applicant :Refrigeration Main Building East Area Midea Industry Town Beijiao Shunde Foshan Guangdong 528311 China
(72)**Name of Inventor :**
1)MAO Xianyou
2)LIU Yang
3)WAN Ming
4)XIA Xiaodeng

(57) Abstract :
Disclosed is an air conditioning indoor machine comprising: a housing (1) defining an accommodating chamber (10) the bottom of the accommodating chamber (10) being provided with an air inlet (11) and an air outlet (12) spaced apart; a heat exchanger (2) and a fan (3) provided in the accommodating chamber (10); and a panel (4) the panel (4) being provided at the bottom of the housing (1) and constructed to be movable between a closing position in which the air inlet (11) and the air outlet (12) are closed at the same time and an opening position in which the air inlet (11) and the air outlet (12) are opened at the same time. In the opening position the panel (4) at least partially insulates the air entering the air inlet (11) from the air exiting the air outlet (12).

No. of Pages : 35 No. of Claims : 20

(12) PATENT APPLICATION PUBLICATION
(19) INDIA
(22) Date of filing of Application :27/03/2015
(21) Application No.819/KOLNP/2015 A
(43) Publication Date : 25/12/2015

(54) Title of the invention : SYSTEM FOR PROCESSING LIQUEFIED GAS ON VESSEL

(51) International classification :F02M21/02,F02M37/04,B63H21/38
(31) Priority Document No :10-2012-0118241
(32) Priority Date :24/10/2012
(33) Name of priority country :Republic of Korea
(86) International Application No :PCT/KR2013/009543
Filing Date :24/10/2013
(87) International Publication No :WO 2014/065621
(61) Patent of Addition to Application Number :NA
Filing Date :NA
(62) Divisional to Application Number :NA
Filing Date :NA

(71)**Name of Applicant :**
1)DAEWOO SHIPBUILDING & MARINE ENGINEERING CO., LTD.
Address of Applicant :85, Da-dong, Jung-gu, Seoul 100-180 REPUBLIC OF KOREA
(72)**Name of Inventor :**
1)LEE, JOON CHAE
2)KWON, SOON BEEN
3)KIM, NAM SOO
4)CHOI, DONG KYU
5)JUNG, JEHEON
6)MOON, YOUNG SIK
7)KIM, DONG CHAN

(57) Abstract :
Disclosed is a system for treating liquefied gas on a vessel, the system having a storage tank for storing liquefied natural gas, and an engine using the liquefied natural gas as fuel. The system for treating liquefied gas comprises: a compressor line for supplying, to the engine as fuel, boil-off gas generated in the storage tank and compressed by a compressor; a high-pressure pump line for supplying, to the engine as fuel, liquefied natural gas stored in the storage tank and compressed by a pump; and a heat exchanger for transferring heat between a part of the boil-off gas, from among the boil-off gas compressed by the compressor, and the boil-off gas discharged from the storage tank and transported to the compressor, so as to liquefy same.

No. of Pages : 55 No. of Claims : 11

(12) PATENT APPLICATION PUBLICATION
(19) INDIA
(22) Date of filing of Application :27/03/2015
(21) Application No.820/KOLNP/2015 A
(43) Publication Date : 25/12/2015

(54) Title of the invention : METHOD FOR PROCESSING LIQUEFIED GAS IN SHIP

(51) International classification :F02M21/02,B63H21/38,B63B25/16
(31) Priority Document No :10-2012-0118241
(32) Priority Date :24/10/2012
(33) Name of priority country :Republic of Korea
(86) International Application No :PCT/KR2013/009542
Filing Date :24/10/2013
(87) International Publication No :WO 2014/065620
(61) Patent of Addition to Application Number :NA
Filing Date :NA
(62) Divisional to Application Number :NA
Filing Date :NA

(71)**Name of Applicant :**
1)DAEWOO SHIPBUILDING & MARINE ENGINEERING CO., LTD.
Address of Applicant :85, Da-dong, Jung-gu, Seoul 100-180 REPUBLIC OF KOREA
(72)**Name of Inventor :**
1)LEE, JOON CHAE
2)KWON, SOON BEEN
3)CHOI, DONG KYU
4)MOON, YOUNG SIK
5)KIM, DONG CHAN
6)JUNG, JEHEON
7)KIM, NAM SOO

(57) Abstract :
Disclosed is a method for processing liquefied gas by means of a system for processing a liquefied gas in a ship, comprising a storage tank for storing LNG, and a main engine and an auxiliary engine using the LNG stored in the storage tank as a fuel. The system for processing the liquefied gas comprises: a compressor line for compressing BOG generated in the storage tank with a compressor and supplying same as the fuel to the main engine and the auxiliary engine; and a pump line for compressing the LNG accommodated in the storage tank with a pump and supplying same as the fuel to the main engine and the auxiliary engine. In a laden state in which the amount of LNG stored in the storage tank is higher than that in a ballast state, the BOG generated in the storage tank is supplied as the fuel through the compressor line to the main engine and/or the auxiliary engine.

No. of Pages : 56 No. of Claims : 10

(12) PATENT APPLICATION PUBLICATION
(19) INDIA
(22) Date of filing of Application :01/04/2015
(21) Application No.377/KOL/2015 A
(43) Publication Date : 25/12/2015

(54) Title of the invention : DEVICE AND METHOD FOR MEASURING THE MOISTURE IN DIE CASTING MOLDS

(51) International classification :B22D17/22
(31) Priority Document No :00615/14
(32) Priority Date :14/04/2014
(33) Name of priority country :Switzerland
(86) International Application No :NA
Filing Date :NA
(87) International Publication No : NA
(61) Patent of Addition to Application Number :NA
Filing Date :NA
(62) Divisional to Application Number :NA
Filing Date :NA

(71)**Name of Applicant :**
1)FONDAREX S.A.
Address of Applicant :ROUTE INDUSTRIELLE 13, Z.I. RIO-GREDON, CH-1806 ST-LÉGIER SWITZERLAND
(72)**Name of Inventor :**
1)BAUMGARTNER KONRAD
2)HUGUENIN-VUILLEMIN YVES GÉRARD LAURENT

(57) Abstract :
The invention relates to a device (1) and a method for measuring the moisture in die cast molds (24), the cavity (25) of which is connected via an evacuation conduit (31) to an evacuation device (28). The modular assembly of the device (1) is connectable to the evacuation conduit (31) and comprises a sensor assembly (S) by means of which the moisture of gases evacuated from the mold cavity (25) is measurable. The sensor assembly (S) comprises an emitter (7) emitting electromagnetic radiation and a detector (14) detecting electromagnetic radiation. On the basis of the measured values obtained during the evacuation action it can be determined whether the amount of a water/release agent mixture jetted into the mold cavity (25) needs to be altered before the actual casting action.

No. of Pages : 22 No. of Claims : 22

(12) PATENT APPLICATION PUBLICATION
(21) Application No.782/KOLNP/2015 A
(19) INDIA
(22) Date of filing of Application :21/03/2015
(43) Publication Date : 25/12/2015

(54) Title of the invention : CLUSTER SERVICE QUICK ESTABLISHMENT METHOD RELEVANT DEVICE AND SYSTEM

(51) International classification :H04W4/10
(31) Priority Document No :201210344096.4
(32) Priority Date :17/09/2012
(33) Name of priority country :China
(86) International Application No :PCT/CN2013/083655
Filing Date :17/09/2013
(87) International Publication No :WO 2014/040573
(61) Patent of Addition to Application Number :NA
Filing Date :NA
(62) Divisional to Application Number :NA
Filing Date :NA

(71)**Name of Applicant :**
1)HUAWEI TECHNOLOGIES CO. LTD.
Address of Applicant :Huawei Administration Building Bantian Longgang Shenzhen Guangdong 518129 China
(72)**Name of Inventor :**
1)HUAWEI TECHNOLOGIES CO. LTD.

(57) Abstract :
Disclosed are a cluster service quick establishment method relevant device and system the method comprising: a base station device receives indication information transmitted by an evolved packet core network device and indicating that a user equipment (UE) has entered a cluster service mode; the base station device creates a radio resource control connection with the UE in response to the indication information; the base station device generates radio resource connection configuration information containing a discontinuous reception period in response to the indication information; the base station device transmits the radio resource connection configuration information to the UE such that the UE can configure the discontinuous reception period as the discontinuous reception period thereof; and when the UE is in the cluster service mode the base station device maintains the radio resource control connection with the UE according to the radio resource connection configuration information. The present invention effectively reduces the cluster service establishment delay thus ensuring quick establishment of the cluster service.

No. of Pages : 62 No. of Claims : 25

(12) PATENT APPLICATION PUBLICATION
(19) INDIA
(22) Date of filing of Application :23/03/2015
(21) Application No.783/KOLNP/2015 A
(43) Publication Date : 25/12/2015

(54) Title of the invention : MANIPULATION RESILIENT TIME DISTRIBUTION NETWORK

(51) International classification :G01S1/00
(31) Priority Document No :61/716402
(32) Priority Date :19/10/2012
(33) Name of priority country :U.S.A.
(86) International Application No :PCT/US2013/064012
Filing Date :09/10/2013
(87) International Publication No :WO 2014/062434
(61) Patent of Addition to Application Number :NA
Filing Date :NA
(62) Divisional to Application Number :NA
Filing Date :NA

(71)**Name of Applicant :**
1)SCHWEITZER ENGINEERING LABORATORIES INC.
Address of Applicant :2350 NE Hopkins Court Pullman WA 99163 U.S.A.
(72)**Name of Inventor :**
1)SCHWEITZER ENGINEERING LABORATORIES INC.

(57) Abstract :
Disclosed herein is a system for detecting manipulation of a global time source such as a Global Navigational Satellite System (GNSS) signal and mitigating against such manipulation. A plurality of receivers with geographical diversity receive GNSS signals and calculate a time signal to be distributed to consuming devices. The receivers also communicate calculated time signals with other receivers. The receivers compare the time signals and when a difference between the time signals exceeds a predetermined threshold the receivers indicate that manipulation is likely. Such indication is shared across the network of receivers. The indication is further shared with consuming devices of the time signal from the compromised receiver. A second time signal that is not compromised may be shared with the consuming devices and/or used by the consuming devices. The consuming devices may modify their behavior when in receipt of the indication.

No. of Pages : 32 No. of Claims : 25

(12) PATENT APPLICATION PUBLICATION
(19) INDIA
(22) Date of filing of Application :30/03/2015
(21) Application No.838/KOLNP/2015 A
(43) Publication Date : 25/12/2015

(54) Title of the invention : MEDICAMENT DELIVERY DEVICE

(51) International classification :A61M5/50,A61M5/20,A61M5/32
(31) Priority Document No :1251133-3
(32) Priority Date :05/10/2012
(33) Name of priority country :Sweden
(86) International Application No :PCT/EP2013/070373
Filing Date :30/09/2013
(87) International Publication No :WO 2014/053451
(61) Patent of Addition to Application Number :NA
Filing Date :NA
(62) Divisional to Application Number :NA
Filing Date :NA

(71)**Name of Applicant :**
1)CAREBAY EUROPE LTD
Address of Applicant :Suite 3 Tower Business Centre Tower Street Swatar BKR 4013 MALTA
(72)**Name of Inventor :**
1)HOLMQVIST, ANDERS

(57) Abstract :
The present invention relates to a medicament delivery device comprising a housing (10) adapted to receive a medicament container (24); an actuation member (48) movable from a first position to a second position, such that the medicament is allowed to be expelled through the delivery member (28);an interlock member (46) movable between a locking position, and a releasing position, the device having an indicator to show that it has been used provided by the actuation member (48) being retained in its second position. The invention is characterised in that the actuation member comprises at least one latching projection (58) and the drive mechanism comprises corresponding latching surfaces (64) against which the latching projections (58) latch when the actuation member (48) is in its second position.

No. of Pages : 30 No. of Claims : 17

(12) PATENT APPLICATION PUBLICATION
(21) Application No.2797/KOLNP/2009 A
(19) INDIA
(22) Date of filing of Application :03/08/2009
(43) Publication Date : 25/12/2015

(54) Title of the invention : CORRUGATED STEEL PIPE HAVED DUAL TYPE

(51) International classification :F16L 23/00
(31) Priority Document No :10-2007-0001046
(32) Priority Date :04/01/2007
(33) Name of priority country :Republic of Korea
(86) International Application No :PCT/KR2007/002677
Filing Date :01/06/2007
(87) International Publication No :WO 2008/082040
(61) Patent of Addition to Application Number :NA
Filing Date :NA
(62) Divisional to Application Number :NA
Filing Date :NA

(71)**Name of Applicant :**
1)DONG WON STEEL CO., LTD.
Address of Applicant :960-1, DOGAE-RI MIRYEOK-MYEON, BOSEONG-GUN JEOLLANAM-DO, 542-822 Republic of Korea
(72)**Name of Inventor :**
1)LEE, JANG-SUB

(57) Abstract :
Provided is a corrugated steel pipe with a double structure, and more particularly, to a corrugated steel pipe with a double structure, which can dispose a smooth-walled plastic pipe in a corrugated steel pipe more conveniently, thereby providing a simple construction and conveniently assembling corrugated steel pipes while simultaneously improving a coupling force and a sealing force.

No. of Pages : 10 No. of Claims : 4

(12) PATENT APPLICATION PUBLICATION
(19) INDIA
(22) Date of filing of Application :19/06/2014
(21) Application No.664/KOL/2014 A
(43) Publication Date : 25/12/2015

(54) Title of the invention : HIGHLY FUEL EFFICIENT VEHICLE HAVING A POWER TRANSMISSION SYSTEM

(51) International classification	:F02M27/00	(71)**Name of Applicant :**
(31) Priority Document No	:NA	**1)SIBNATH MAITY**
(32) Priority Date	:NA	Address of Applicant :CSIR-CENTRAL MECHANICAL
(33) Name of priority country	:NA	ENGINEERING RESEARCH INSTITUTE ROOM NO.BA004
(86) International Application No	:NA	M G ROAD, DURGAPUR, WEST BENGAL, 713209 India
Filing Date	:NA	**2)PARTHA POBI**
(87) International Publication No	: NA	**3)**
(61) Patent of Addition to Application Number	:NA	(72)**Name of Inventor :**
Filing Date	:NA	**1)SIBNATH MAITY**
(62) Divisional to Application Number	:NA	**2)PARTHA POBI**
Filing Date	:NA	

(57) Abstract :
This invention relates to a highly fuel efficient vehicle having a power transmission system and in particular, this invention relates to a highly fuel efficient vehicle with a combination of a pair of engines which is being operated separately in synchronization either individually or collectively as and when required with judicious power transmission system. More particularly, this present invention relates to a highly fuel efficient vehicle which can be operated by two numbers of low powered engines or by one low powered engine based on output load required. Furthermore, this invention also relates to a highly fuel efficient vehicle which has the beneficial effects of simple structure and the economic benefit is greatly improved, so that the eco-friendly car has the advantages of high efficiency, fuel saving, environmental friendliness and economy.

No. of Pages : 24 No. of Claims : 10

(12) PATENT APPLICATION PUBLICATION
(19) INDIA
(22) Date of filing of Application :21/03/2015
(21) Application No.780/KOLNP/2015 A
(43) Publication Date : 25/12/2015

(54) Title of the invention : DISPERSION OF CARBON ENHANCED REINFORCEMENT FIBERS IN AQUEOUS OR NON AQUEOUS MEDIA

(51) International classification	:C03C25/32,C03C25/40,D06M15/21
(31) Priority Document No	:61/696500
(32) Priority Date	:04/09/2012
(33) Name of priority country	:U.S.A.
(86) International Application No	:PCT/US2013/057985
Filing Date	:04/09/2013
(87) International Publication No	:WO 2014/039509
(61) Patent of Addition to Application Number	:NA
Filing Date	:NA
(62) Divisional to Application Number	:NA
Filing Date	:NA

(71)**Name of Applicant :**
1)OCV INTELLECTUAL CAPITAL LLC
Address of Applicant :One Owens Corning Parkway Toledo OH 43649 U.S.A.
(72)**Name of Inventor :**
1)OCV INTELLECTUAL CAPITAL LLC

(57) Abstract :
The general inventive concepts relate generally to carbon enhanced reinforcement (CER) fibers and more particularly to the controlled dispersion of CER fibers within aqueous or non aqueous media. The general inventive concepts particularly relate to the controlled dispersion of CER fibers within aqueous or non aqueous media for forming a nonwoven chopped CER fiber mat. The general inventive concepts also relate to the controlled dispersion of CNSs harvested from CER fibers within aqueous or non aqueous media for forming a nonwoven CNS mat. Methods for dispersing the CNSs or the CER fibers in aqueous or non aqueous media are also provided.

No. of Pages : 40 No. of Claims : 30

(12) PATENT APPLICATION PUBLICATION
(19) INDIA
(22) Date of filing of Application :21/03/2015
(21) Application No.781/KOLNP/2015 A
(43) Publication Date : 25/12/2015

(54) Title of the invention : METHODS AND NODES IN A WIRELESS COMMUNICATION SYSTEM

(51) International classification :H04L1/18,H04L5/00
(31) Priority Document No :PCT/EP2012/069023
(32) Priority Date :27/09/2012
(33) Name of priority country :EPO
(86) International Application No :PCT/EP2012/076586
Filing Date :21/12/2012
(87) International Publication No :WO 2014/048509
(61) Patent of Addition to Application Number :NA
Filing Date :NA
(62) Divisional to Application Number :NA
Filing Date :NA

(71)**Name of Applicant :**
1)HUAWEI TECHNOLOGIES CO. LTD.
Address of Applicant :Huawei Administration Building Bantian Longgang Shenzhen Guangdong 518129 China
(72)**Name of Inventor :**
1)BERGGREN Fredrik
2)LIU Jianghua

(57) Abstract :
Methods and nodes for assignment of uplink control channel resources for providing HARQ feedback for data transmitted on a downlink data channel associated with a downlink control channel. The downlink control channel comprises at least a set of downlink control channel resources which is configurable over a subset of available time frequency resources. The method comprises dividing the set of downlink control channel resources into at least two subsets of references comprising indices to the respective downlink control channel resources. Also the method comprises defining for each such subset of references an associated subset of references comprising indices to unique uplink control channel resources. Furthermore the method comprises associating each element in the subset of references with a subframe and an element in the subset of references. Additionally the method further comprises transmitting data on the downlink data channel associated with the downlink control channel.

No. of Pages : 74 No. of Claims : 40

(12) PATENT APPLICATION PUBLICATION
(19) INDIA
(22) Date of filing of Application :30/03/2015
(21) Application No.837/KOLNP/2015 A
(43) Publication Date : 25/12/2015

(54) Title of the invention : ORGANIC FERTILIZER AND FEED PRODUCTION SYSTEM

(51) International classification :A23N 17/00,
(31) Priority Document No :2012-236439
(32) Priority Date :26/10/2012
(33) Name of priority country :Japan
(86) International Application No :PCT/JP2013/077892
Filing Date :15/10/2013
(87) International Publication No :WO 2014/065148
(61) Patent of Addition to Application Number :NA
Filing Date :NA
(62) Divisional to Application Number :NA
Filing Date :NA

(71)**Name of Applicant :**
1)E'S INC.
Address of Applicant :DAI 6 TOYO-KAIJI BLDG., 6F 7-2, SHINBASHI 4-CHOME,, MINATO-KU, TOKYO 1050004, JAPAN
(72)**Name of Inventor :**
1)KITAZUMI KAZUSHINGE
2)MATSUSHIMA MIKIO
3)NAKANO YASUHARU
4)POLUTOVA YAROSLAVA
5)NAGAE KOJI
6)SEKIYA RYOICHI
7)YAMAWAKI HISAKI

(57) Abstract :
[Problem] To provide a method for producing an organic fertilizer in which livestock excreta is processed by house flies, Boettcherisca peregrina, and Stratiomyidae larvae, and for producing feed using matured larvae as feed for cultured fish and poultry.
[Solution] A system for producing an organic fertilizer from the waste of livestock using house flies, Boettcherisca peregrina, and Stratiomyidae larvae, and for producing feed using matured larvae as feed for cultured fish and poultry, multiple cultivation processing housing units being provided for cultivating larvae or larvae hatched from eggs, and when larvae are caused to move on to a different cultivation processing housing unit in the course of the cultivation of the larvae, a movement means being used in which only the larvae are forced to move, causing the larvae to move on their own.

No. of Pages : 26 No. of Claims : 9

(12) PATENT APPLICATION PUBLICATION
(21) Application No.1430/KOL/2013 A
(19) INDIA
(22) Date of filing of Application :18/06/2014
(43) Publication Date : 25/12/2015

(54) Title of the invention : 'AN IMPROVED HEAT TREATMENT APPARATUS FOR HEATING SOFTER METALS IN THE FORM OF GOLD AND COPPER'

(51) International classification :H01L21/00,
(31) Priority Document No :NA
(32) Priority Date :NA
(33) Name of priority country :NA
(86) International Application No :NA
Filing Date :NA
(87) International Publication No : NA
(61) Patent of Addition to Application Number :NA
Filing Date :NA
(62) Divisional to Application Number :NA
Filing Date :NA

(71)**Name of Applicant :**
1)BENGAL ENGINEERING & SCIENCE UNIVERSITY SHIBPUR,
Address of Applicant :DEPARTMENT OF ELECTRICAL ENGINEERING BOTANIC GARDEN, HOWRAH 711 103, INDIA West Bengal
(72)**Name of Inventor :**
1)MOLAY ROY
2)MAINAK SENGUPTA

(57) Abstract :
The invention relates to an improved heat treatment apparatus for heating softer metals using a high frequency current source converter, comprising : a diode bridge rectifier (block 1C of figure 19) of an induction heating unit used to convert single phase AC 50 Hz source to DC (Figure 20); a dc-link inductor (block 2 of figure 19) used to realize the current source for the CS- converter, the DC-link current being continuous in nature, the modified DC- link inductor improving the source power factor; a developed current source converter circuit configuration (block 3 of figure 19) for the high frequency induction heating application, wherein a CS-converter acting as a current chopper circuit (figure 20) which is a combination of two (2) switching devices (IGBTs), wherein the switches are connected on both side of the load (figure 21), and wherein the apparatus is enabled to operate at very high frequency inspite of the power levels, and function as a self-adjusting resonant converter, the switches operating in a complementary way that is, when T1 switching device is ON, T2 switching device is OFF and vice-versa, the load current flowing only during the ON time of switch T2, the remaining time the current flowing through switch T1, a high frequency alternating current for the load (4) causing creation of high frequency magnetic field around the heating coil.

No. of Pages : 39 No. of Claims : 4

(12) PATENT APPLICATION PUBLICATION
(21) Application No.338/KOL/2015 A
(19) INDIA
(22) Date of filing of Application :26/03/2015
(43) Publication Date : 25/12/2015

(54) Title of the invention : METHOD AND SYSTEM FOR COMPARING TWO VERSIONS OF A CLOUD BASED APPLICATION IN A PRODUCTION ENVIRONMNT USING SEGREGATED BACKEND SYSTEMS

(51) International classification :G06F11/10
(31) Priority Document No :14/231,141
(32) Priority Date :31/03/2014
(33) Name of priority country :U.S.A.
(86) International Application No :NA
Filing Date :NA
(87) International Publication No : NA
(61) Patent of Addition to Application Number :NA
Filing Date :NA
(62) Divisional to Application Number :NA
Filing Date :NA

(71)**Name of Applicant :**
1)INTUIT INC.
Address of Applicant :2700 COAST AVENUE, MOUNTAIN VIEW, CA 94043 UNITED STATES OF AMERICA.
(72)**Name of Inventor :**
1)BRETT WEAVER
2)JAVIER GODINEZ
3)CAPEN BRINKLEY
4)THOMAS BISHOP
5)M. SHANNON LIETZ
6)LUIS FELIPE CABRERA

(57) Abstract :
An application is implemented in the production environment in which the application will be used. Two or more backend systems are used to implement different versions of the application using the production environment in which the application will actually be used and accessed. Actual user data is received. A first portion of the actual user data is routed and processed in the production environment using a first version of the application and a first backend system of the two or more backend systems. A second portion of the actual user data is also routed and processed in the production environment but using a second version of the application and a second backend system of the two or more backend systems. The results data is then analyzed to evaluate the various versions of the application in the production environment.

No. of Pages : 47 No. of Claims : 30

(12) PATENT APPLICATION PUBLICATION
(19) INDIA
(22) Date of filing of Application :07/04/2015
(21) Application No.390/KOL/2015 A
(43) Publication Date : 25/12/2015

(54) Title of the invention : A REAL-TIME SMART DISPLAY DETECTION SYSTEM

(51) International classification :G09G5/00
(31) Priority Document No :61/979,450
(32) Priority Date :14/04/2014
(33) Name of priority country :U.S.A.
(86) International Application No :NA
Filing Date :NA
(87) International Publication No : NA
(61) Patent of Addition to Application Number :NA
Filing Date :NA
(62) Divisional to Application Number :NA
Filing Date :NA

(71)**Name of Applicant :**
1)RICOH COMPANY, LTD.
Address of Applicant :3-6, NAKAMAGOME 1-CHOME, OHTA-KU, TOKYO 143-8555 JAPAN
(72)**Name of Inventor :**
1)SHU SHI
2)JOHN BARRUS

(57) Abstract :
A smart display detection system is disclosed. The smart display system is configured to allow mobile users to connect with display screens through mobile device cameras. The system can detect the display screens within images captured by the mobile device camera in real time by matching the camera query image with screen images dynamically updated from the display devices. A synchronized time-stamped matching strategy is applied to achieve high performance in detecting the screens playing motion intensive video contents and an aggressive feature selection method is applied to minimize the system uploading bandwidth. The system can accurately find display screens playing either static or dynamic content within an image captured on a mobile device.

No. of Pages : 61 No. of Claims : 20

(12) PATENT APPLICATION PUBLICATION
(21) Application No.775/KOLNP/2015 A
(19) INDIA
(22) Date of filing of Application :20/03/2015
(43) Publication Date : 25/12/2015

(54) Title of the invention : TOPOLOGY DEFINING CARDS FOR OPTICALLY INTERCONNECTED TELECOMMUNICATION SYSTEMS

(51) International classification :H04Q1/02,H04J14/02
(31) Priority Document No :13/598222
(32) Priority Date :29/08/2012
(33) Name of priority country :U.S.A.
(86) International Application No :PCT/IB2013/056897
Filing Date :26/08/2013
(87) International Publication No :WO 2014/033616
(61) Patent of Addition to Application Number :NA
Filing Date :NA
(62) Divisional to Application Number :NA
Filing Date :NA

(71)**Name of Applicant :**
1)TELEFONAKTIEBOLAGET L M ERICSSON (PUBL)
Address of Applicant :S 164 80 Stockholm Sweden
(72)**Name of Inventor :**
1)TELEFONAKTIEBOLAGET L M ERICSSON (PUBL)

(57) Abstract :
Topology defining card units are used to provide optical interconnections between multiple slots of an equipment subrack. An example card unit is adapted for installation in a slot of an equipment subrack having a plurality of slots and having a backplane. The card unit includes one or more back side optical connectors configured so as to mate with corresponding optical connector receptacles on the backplane of the equipment subrack when the card unit is installed in the equipment subrack. These one or more back side optical connectors include a plurality of card unit optical interfaces. The card unit further includes an optical interconnection network that optically couples each one of the plurality of card unit optical interfaces to another one of the plurality of card unit optical interfaces.

No. of Pages : 28 No. of Claims : 19

(12) PATENT APPLICATION PUBLICATION
(19) INDIA
(22) Date of filing of Application :30/03/2015
(21) Application No.841/KOLNP/2015 A
(43) Publication Date : 25/12/2015

(54) Title of the invention : COUMARIN DERIVATIVE

(51) International classification :C07D311/18,A61K31/352,A61K31/381
(31) Priority Document No :2012-208656
(32) Priority Date :21/09/2012
(33) Name of priority country :Japan
(86) International Application No :PCT/JP2013/075414
Filing Date :20/09/2013
(87) International Publication No :WO 2014/046224
(61) Patent of Addition to Application Number :NA
Filing Date :NA
(62) Divisional to Application Number :NA
Filing Date :NA

(71)**Name of Applicant :**
1)NIPPON ZOKI PHARMACEUTICAL CO., LTD.
Address of Applicant :1-2, Hiranomachi 2-chome, Chuo-ku, Osaka-shi, Osaka 5410046 JAPAN
(72)**Name of Inventor :**
1)NAIKI, MITSURU
2)OKADA, TOMOYUKI
3)SAWADA, KAZUYOSHI
4)OGINO, TAKASHI

(57) Abstract :
The purpose of the invention is to provide a novel coumarin derivative or pharmaceutically acceptable salt thereof and a drug containing this compound as an active ingredient. This coumarin derivative or pharmaceutically acceptable salt thereof presents an excellent cartilage destruction-inhibiting effect and synovial cell proliferation-inhibiting effect in pharmacological studies taking release of sulfated glycosaminoglycans (sGAG) and proliferation of synovial cells as indicators, and therefore is extremely useful as an active ingredient of pharmaceutical compositions for the prevention or treatment of osteoarthritis, rheumatoid arthritis, and other such arthropathies. (In the formula R1 and R2 are the same or different, (a) alkoxy, alkyl, cyano, nitro, hydroxy, trifluoromethyl, amino, carboxy, alkoxycarbonyl, phenyl, or phenyl optionally substituted by one or two halogens, (b) pyridyl, (c) alkyl, or (d) thienyl.)

No. of Pages : 43 No. of Claims : 17

(12) PATENT APPLICATION PUBLICATION
(19) INDIA
(22) Date of filing of Application :20/03/2015
(21) Application No.771/KOLNP/2015 A
(43) Publication Date : 25/12/2015

(54) Title of the invention : METHOD FOR OPERATING AN ELECTRICALLY OPERABLE PARKING BRAKE SYSTEM AND CONTROL DEVICE FOR AN ELECTRICALLY OPERABLE PARKING BRAKE SYSTEM

(51) International classification :B60T13/26,B60T13/68
(31) Priority Document No :12188591.7
(32) Priority Date :15/10/2012
(33) Name of priority country :EPO
(86) International Application No :PCT/EP2013/071239
Filing Date :11/10/2013
(87) International Publication No :WO 2014/060296
(61) Patent of Addition to Application Number :NA
Filing Date :NA
(62) Divisional to Application Number :NA
Filing Date :NA

(71)**Name of Applicant :**
1)KNORR BREMSE SYSTEME FÜR NUTZFAHRZEUGE GMBH
Address of Applicant :Moosacher Str. 80 80809 München Germany
(72)**Name of Inventor :**
1)KNORR BREMSE SYSTEME FÜR NUTZFAHRZEUGE GMBH

(57) Abstract :
The invention relates to a method (102) for operating an electrically operable parking brake system (100) of a vehicle (104) comprising a towing vehicle (106) wherein an execution of a trailer test function is initiated by applying the electrically operable parking brake system (100). According to the invention it is contemplated that the execution of the trailer test function is stopped and/or interrupted when at least one of the following conditions is fulfilled: a service brake (110) of the vehicle (104) is applied a gear is engaged a supply pressure of the electrically operable parking brake system (100) is too low the vehicle (104) is moving the electrically operable parking brake system (100) is released an error is detected. The present invention further relates to a control device for an electrically operable parking brake system (100).

No. of Pages : 25 No. of Claims : 11

(12) PATENT APPLICATION PUBLICATION
(19) INDIA
(22) Date of filing of Application :20/03/2015
(21) Application No.772/KOLNP/2015 A
(43) Publication Date : 25/12/2015

(54) Title of the invention : SLIDING-TYPE SIGNAL INPUT DEVICE

(51) International classification :H01H25/00,H01H13/02
(31) Priority Document No :10-2012-0092876
(32) Priority Date :24/08/2012
(33) Name of priority country :Republic of Korea
(86) International Application No :PCT/KR2013/007555
Filing Date :23/08/2013
(87) International Publication No :WO 2014/030949
(61) Patent of Addition to Application Number :NA
Filing Date :NA
(62) Divisional to Application Number :NA
Filing Date :NA

(71)**Name of Applicant :**
1)ITVERS CO., LTD.
Address of Applicant :Unit 1224 Life Combi Bldg., 61-4 Yeouido-dong, Yeongdeungpo-gu, Seoul 150-732 REPUBLIC OF KOREA
(72)**Name of Inventor :**
1)KIM, YOUN SOO

(57) Abstract :
A sliding-type signal input device, according to the present invention, comprises: a housing having an inner space with an opened upper side; a slide button mounted in the inner space; a flexible printed circuit board which is coupled to enclose an inner wall of the inner space and/or an outer sidewall of the slide button, and which is provided with two or more terminal switches; and a conductor which is arranged to enclose the other one from among the inner wall of the inner space and the outer sidewall of the slide button, and which comes in contact with the terminal switches when the slide button is moved in a lateral direction so as to connect the terminal switches. According to the present invention, the slide-type signal input device can generate different types of input signals according to the direction of an operating force for sliding in a lateral direction such that the number of buttons comprised in the signal input device can be reduced, and it is possible to detect the operating force for sliding in the lateral direction even without comprising a separate pressure sensor, thereby simplifying the configuration, remarkably reducing manufacturing costs, and simultaneously generating two or more input signals.

No. of Pages : 46 No. of Claims : 28

(12) PATENT APPLICATION PUBLICATION
(19) INDIA
(22) Date of filing of Application :30/03/2015
(21) Application No.834/KOLNP/2015 A
(43) Publication Date : 25/12/2015

(54) Title of the invention : HIGH PERFORMANCE, LIGHTWEIGHT PRECAST COMPOSITE INSULATED CONCRETE PANELS AND HIGH ENERGY-EFFICIENT STRUCTURES AND METHODS OF MAKING SAME

(51) International classification :E04B1/80,B32B7/08,B32B7/02
(31) Priority Document No :13/626,087
(32) Priority Date :25/09/2012
(33) Name of priority country :U.S.A.
(86) International Application No :PCT/US2013/061238
Filing Date :23/09/2013
(87) International Publication No :WO 2014/052247
(61) Patent of Addition to Application Number :NA
Filing Date :NA
(62) Divisional to Application Number :NA
Filing Date :NA

(71)**Name of Applicant :**
1)CIUPERCA, Romeo, Ilarian
Address of Applicant :4363 Whitecap Lane, Norcross,GA 30092 UNITED STATES OF AMERICA.
(72)**Name of Inventor :**
1)CIUPERCA, Romeo, Ilarian

(57) Abstract :
The invention comprises a relatively lightweight cementitious-based material panel. The cementitious-based material panel comprises a foam insulating panel having a first surface and a second surface; a first structural layer of cementitious-based material formed on the first surface of the foam insulating panel and affixed thereto; and a second non-structural layer of cementitious-based material formed on the second surface of the foam insulating panel and affixed thereto. The second non-structural layer of cementitious-based material is substantially thinner than the first structural layer of concrete. The second non-structural layer of cementitious-based material is preferably formed from polymer modified concrete, plaster or mortar. A method of making the cementitious-based material panel is also disclosed.

No. of Pages : 89 No. of Claims : 30

(12) PATENT APPLICATION PUBLICATION
(19) INDIA
(22) Date of filing of Application :30/03/2015
(21) Application No.835/KOLNP/2015 A
(43) Publication Date : 25/12/2015

(54) Title of the invention : OPTICAL DEVICE WITH DIFFRACTIVE GRATING

(51) International classification :F21V8/00,G02B27/01,G02B5/18
(31) Priority Document No :20125971
(32) Priority Date :20/09/2012
(33) Name of priority country :Finland
(86) International Application No :PCT/FI2013/050903
Filing Date :18/09/2013
(87) International Publication No :WO 2014/044912
(61) Patent of Addition to Application Number :NA
Filing Date :NA
(62) Divisional to Application Number :NA
Filing Date :NA

(71)**Name of Applicant :**
1)TEKNOLOGIAN TUTKIMUSKESKUS VTT OY
Address of Applicant :Vuorimiehentie 3 FI 02150 Espoo Finland
(72)**Name of Inventor :**
1)SUNNARI Antti
2)HUTTUNEN Olli Heikki
3)OLKKONEN Juuso

(57) Abstract :
The invention relates to optical devices comprising a transparent substrate and a first transparent grating layer on the substrate the grating layer comprising periodically alternating zones having different refractive indices. According to the invention the device comprises a second transparent grating layer located on top of the first grating layer and also comprising periodically alternating zones having different refractive indices so that the zones of the first grating layer having higher refractive index are at least partly aligned with the zones of the second grating layer having lower refractive index and vice versa the second grating layer reducing the amount of light diffracted to non zero transmission orders. The invention allows for reducing the so called rainbow effect for example in head up displays (HUDs).

No. of Pages : 25 No. of Claims : 22

(12) PATENT APPLICATION PUBLICATION
(19) INDIA
(22) Date of filing of Application :19/03/2015
(21) Application No.752/KOLNP/2015 A
(43) Publication Date : 25/12/2015

(54) Title of the invention : SPORTS FOOTWEAR

(51) International classification :A43B5/14,A43C13/08
(31) Priority Document No :TV2012A000186
(32) Priority Date :28/09/2012
(33) Name of priority country :Italy
(86) International Application No :PCT/IB2013/058849
Filing Date :25/09/2013
(87) International Publication No :WO 2014/049535
(61) Patent of Addition to Application Number :NA
Filing Date :NA
(62) Divisional to Application Number :NA
Filing Date :NA

(71)**Name of Applicant :**
1)ALPINESTARS RESEARCH SRL
Address of Applicant :Via A. De Gasperi, 54, I-31010 Coste di Maser (Treviso) ITALY
(72)**Name of Inventor :**
1)MAZZAROLO, GIOVANNI
2)VANIN, DANIELE

(57) Abstract :
The present invention relates to sports footwear 10 comprising an upper 12 having a toe portion 14 and a sole 13 fixed to said upper 12. The sports footwear 10 also comprises a protection element 30 mounted on the side surface 16 of the toe portion 14. This protection element 30 is fixed permanently to the side surface 16 of the toe portion 14 and is provided with an outer surface 35 provided with first coupling means 33 36 for coupling a covering component 40 on the protection element 30. The first coupling means of the protection element 30 define a seat 32A suitable for housing a fastening element 50 for fastening the covering element 40 onto the protection element 30. In accordance with the invention the seat 32A has a direction of insertion K which is substantially parallel to the side surface 16 of the toe portion 14 of the footwear 10 on which the protection element 30 is mounted. The invention also relates to a covering component 40 suitable for use with footwear 10 according to the invention.

No. of Pages : 21 No. of Claims : 15

(12) PATENT APPLICATION PUBLICATION
(19) INDIA
(22) Date of filing of Application :19/03/2015
(21) Application No.753/KOLNP/2015 A
(43) Publication Date : 25/12/2015

(54) Title of the invention : OVERHUNG TURBINE AND GENERATOR SYSTEM WITH TURBINE CARTRIDGE

(51) International classification :F01D15/10,F01D25/16,F01D25/24
(31) Priority Document No :61/699,649
(32) Priority Date :11/09/2012
(33) Name of priority country :U.S.A.
(86) International Application No :PCT/US2013/059275
Filing Date :11/09/2013
(87) International Publication No :WO 2014/043242
(61) Patent of Addition to Application Number :NA
Filing Date :NA
(62) Divisional to Application Number :NA
Filing Date :NA

(71)**Name of Applicant :**
1)CONCEPTS ETI, INC.
Address of Applicant :217 Billings Farm Road, Wilder, VT 05088 UNITED STATES OF AMERICA.
(72)**Name of Inventor :**
1)FAIRMAN, KEVIN
2)DI BELLA, FRANCIS A.
3)JAPIKSE, DAVID
4)BECKER, FREDERICK, E.
5)GOFER, ALEXANDER

(57) Abstract :
A turbine- generator device for use in electricity generation using heat from industrial processes, renewable energy sources and other sources. The generator may be cooled by introducing into the gap between the rotor and stator liquid that is vaporized or atomized prior to introduction, which liquid is condensed from gases exhausted from the turbine. The turbine has a universal design and so may be relatively easily modified for use in connection with generators having a rated power output in the range of 50KW to 5MW. Such modifications are achieved, in part, through use of a modular turbine cartridge built up of discrete rotor and stator plates sized for the desired application with turbine brush seals chosen to accommodate radial rotor movements from the supported generator. The cartridge may be installed and removed from the turbine relatively easily for maintenance or rebuilding. The rotor housing is designed to be relatively easily machined to dimensions that meet desired operating parameters.

No. of Pages : 45 No. of Claims : 33

(12) PATENT APPLICATION PUBLICATION
(19) INDIA
(22) Date of filing of Application :26/03/2015
(21) Application No.815/KOLNP/2015 A
(43) Publication Date : 25/12/2015

(54) Title of the invention : FUNCTIONAL TRAYS FOR HANDLING PRODUCTS IN A MATERIALS HANDLING FACILITY

(51) International classification :B65G47/34
(31) Priority Document No :NA
(32) Priority Date :NA
(33) Name of priority country :NA
(86) International Application No :PCT/US2012/000457
Filing Date :03/10/2012
(87) International Publication No :WO 2014/055056
(61) Patent of Addition to Application Number :NA
Filing Date :NA
(62) Divisional to Application Number :NA
Filing Date :NA

(71)**Name of Applicant :**
1)AMAZON TECHNOLOGIES, INC.
Address of Applicant :P.O. Box 8102, Reno, Nevada 89507 UNITED STATES OF AMERICA.
(72)**Name of Inventor :**
1)KAWANO, YASUSHI.
2)KANO, TORU

(57) Abstract :
A conveyor system is provided including a conveyor and a plurality of functional trays that are removably attachable to the conveyor. Each tray includes a plate having first and second dimensions that are orthogonal to each other, and the plate includes a coupler configured to be removably attached to the conveyor with the second dimension of the plate being in parallel with a moving direction of the conveyor. The plurality of functional trays include one or more of an envelope-opening mechanism, an item-pushing mechanism, an envelope-closing mechanism, an item-wrapping mechanism, and a tray-height-adjustment mechanism. For example, the item-pushing mechanism includes a pusher slidably coupled to the plate, and a linear actuator configured to move the pusher relative to the plate along the first dimension so as to push an item off the functional tray.

No. of Pages : 42 No. of Claims : 25

(12) PATENT APPLICATION PUBLICATION
(19) INDIA
(22) Date of filing of Application :26/03/2015
(21) Application No.816/KOLNP/2015 A
(43) Publication Date : 25/12/2015

(54) Title of the invention : RESIN-COMPOSITE-MATERIAL PRODUCTION METHOD, AND RESIN COMPOSITE MATERIAL

(51) International classification :C08J3/20,C08K3/04,C08L101/00
(31) Priority Document No :2013-044468
(32) Priority Date :06/03/2013
(33) Name of priority country :Japan
(86) International Application No :PCT/JP2014/054814
Filing Date :27/02/2014
(87) International Publication No :WO 2014/136642
(61) Patent of Addition to Application Number :NA
Filing Date :NA
(62) Divisional to Application Number :NA
Filing Date :NA

(71)**Name of Applicant :**
1)SEKISUI CHEMICAL CO., LTD.
Address of Applicant :4-4, Nishitemma 2-chome, Kita-ku, Osaka-shi Osaka 5308565 JAPAN
(72)**Name of Inventor :**
1)SAWA, KAZUHIRO
2)INUI, NOBUHIKO
3)TAKAHASHI, KATSUNORI

(57) Abstract :
Provided is a production method for a resin composite material which is obtained by grafting a synthetic resin on a carbon material, with which resin deterioration does not readily occur, and which exhibits high mechanical strength. This production method for a resin composite material is provided with: a step in which a resin composition is prepared, said resin composition including a synthetic resin, and a carbon material which has a graphene structure, and which is dispersed in the synthetic resin; and a step which is carried out simultaneously with or after the step in which the resin composition is prepared, and in which the synthetic resin is grafted on the carbon material. The step in which grafting is performed is carried out by mixing the synthetic resin and the carbon material with an initiator in which a carbon radical is generated when subjected to thermal decomposition, and subsequently heating the mixture.

No. of Pages : 56 No. of Claims : 16

(12) PATENT APPLICATION PUBLICATION
(19) INDIA
(22) Date of filing of Application :23/03/2015
(21) Application No.784/KOLNP/2015 A
(43) Publication Date : 25/12/2015

(54) Title of the invention : DETECTION OF MANIPULATED SATELLITE TIME SIGNALS

(51) International classification :G01S1/00
(31) Priority Document No :61/716400
(32) Priority Date :19/10/2012
(33) Name of priority country :U.S.A.
(86) International Application No :PCT/US2013/064942
Filing Date :15/10/2013
(87) International Publication No :WO 2014/062617
(61) Patent of Addition to Application Number :NA
Filing Date :NA
(62) Divisional to Application Number :NA
Filing Date :NA

(71)**Name of Applicant :**
1)SCHWEITZER ENGINEERING LABORATORIES INC.
Address of Applicant :2350 NE Hopkins Court Pullman WA 99163 U.S.A.
(72)**Name of Inventor :**
1)SCHWEITZER ENGINEERING LABORATORIES INC.

(57) Abstract :
Disclosed herein is a system for detecting manipulation of a GNSS signal and mitigating against such manipulation. A GNSS receiver receives GNSS signals from a plurality of GNSS satellites and calculates event times for each GNSS satellite. The GNSS receiver then compares a next event time for a particular GNSS satellite with an expected next event time for the particular GNSS satellite. If the difference between the expected next event time and the next event times exceeds a predetermined threshold then the GNSS receiver indicates that signal integrity may be compromised.

No. of Pages : 26 No. of Claims : 21

(12) PATENT APPLICATION PUBLICATION
(21) Application No.785/KOLNP/2015 A
(19) INDIA
(22) Date of filing of Application :23/03/2015
(43) Publication Date : 25/12/2015

(54) Title of the invention : ELECTRIC MOTOR CONTROL DEVICE

(51) International classification :H02P21/00,H02P27/04
(31) Priority Document No :2012189804
(32) Priority Date :30/08/2012
(33) Name of priority country :Japan
(86) International Application No :PCT/JP2013/068955
Filing Date :11/07/2013
(87) International Publication No :WO 2014/034291
(61) Patent of Addition to Application Number :NA
Filing Date :NA
(62) Divisional to Application Number :NA
Filing Date :NA

(71)**Name of Applicant :**
1)DAIKIN INDUSTRIESLTD.
Address of Applicant :Umeda Center Building 4 12 Nakazaki Nishi 2 chome Kita ku Osaka shi Osaka 5308323 Japan
(72)**Name of Inventor :**
1)DAIKIN INDUSTRIESLTD.

(57) Abstract :
In order to provide feedback on the basis of deviation in the primary magnetic flux when performing primary flux control an electric motor control device (1) is equipped with: a first coordinate conversion unit (101) that converts a three phase current ([I]) to a current ([i]) in a dc c rotating coordinate system; a first calculation unit (102) that determines a feedback item ([F]); a second calculation unit (103A) that determines a voltage command value ([v])in the dc c rotating coordinate system as the sum of the feedback item ([F]) and a feedback item ([B]); a second coordinate conversion unit (104) that performs a coordinate conversion on the voltage command value ([v]) thereby converting this value to a voltage command value ([V]) in another coordinate system for the voltage applied to a rotary electric motor (3); and an integrator (106) that calculates the phase () of the dc axis with respect to the a axis on the basis of a command value () for the rotational angle velocity.

No. of Pages : 44 No. of Claims : 9

(12) PATENT APPLICATION PUBLICATION
(19) INDIA
(22) Date of filing of Application :31/03/2015
(21) Application No.853/KOLNP/2015 A
(43) Publication Date : 25/12/2015

(54) Title of the invention : RECTIFYING ELEMENT

(51) International classification :H01L29/861,H01L29/868
(31) Priority Document No :NA
(32) Priority Date :NA
(33) Name of priority country :NA
(86) International Application No :PCT/JP2013/067564
Filing Date :26/06/2013
(87) International Publication No :WO 2014/207853
(61) Patent of Addition to Application Number :NA
Filing Date :NA
(62) Divisional to Application Number :NA
Filing Date :NA

(71)**Name of Applicant :**
1)THE UNIVERSITY OF ELECTRO-COMMUNICATIONS
Address of Applicant :1-5-1, Chofugaoka, Chofu-shi, Tokyo 1828585 JAPAN
2)NIHON DENGYO KOSAKU CO., LTD.
(72)**Name of Inventor :**
1)NOZAKI, SHINJI
2)UCHIDA, KAZUO
3)KUROKAWA, SHINGO
4)FURUKAWA, MINORU
5)SHIRATO, TADASHI

(57) Abstract :
A rectifying element is provided with: a first electrode having a first work function; a second electrode having a second work function greater than the first work function; and a semiconductor layer having a third work function of values between the first work function and the second work function and bonded to the first electrode and the second electrode. Preferably the semiconductor layer is set at a thickness that becomes fully depleted in a state in which bias voltage is not applied between the first electrode and the second electrode. Thereby a rectifying element is provided that achieves high speed switching characteristics and sufficient rectification.

No. of Pages : 23 No. of Claims : 10

(12) PATENT APPLICATION PUBLICATION
(21) Application No.854/KOLNP/2015 A
(19) INDIA
(22) Date of filing of Application :31/03/2015
(43) Publication Date : 25/12/2015

(54) Title of the invention : TURBINE-BASED ENERGY GENERATION SYSTEM WITH DC OUTPUT

(51) International classification :H02J3/38,H02M7/483
(31) Priority Document No :13/740,359
(32) Priority Date :14/01/2013
(33) Name of priority country :U.S.A.
(86) International Application No :PCT/US2014/010360
Filing Date :06/01/2014
(87) International Publication No :WO 2014/109992
(61) Patent of Addition to Application Number :NA
Filing Date :NA
(62) Divisional to Application Number :NA
Filing Date :NA

(71)**Name of Applicant :**
1)ABB TECHNOLOGY AG
Address of Applicant :Affolternstrasse 44, CH-8050 Zurich SWITZERLAND
(72)**Name of Inventor :**
1)BALA, Sandeep
2)PAN, Jiuping
3)CARR, Joseph A.
4)STEIMER, PETER
5)APELDOORN, OSCAR
6)LINDER, STEFAN

(57) Abstract :
An energy generation system includes a turbine (102), an electric generator (100), a step-up transformer (106), and a converter (104). The turbine (102) is operable to extract energy from a fluid flow and convert the extracted energy into mechanical energy. The electric generator (100) is operable to convert the mechanical energy from the turbine (102) into AC electrical energy. The step-up transformer (106) is operable to transfer the AC electrical energy at a lower voltage from the electric generator (100) to a higher voltage. The converter (104) is operable to convert the AC electrical energy at the higher voltage to DC electrical energy. The converter (104) includes a converter leg (110) for a phase of the AC electrical energy. The converter leg (110) has an upper arm with a first plurality of sub-modules (112) and a lower arm with a second plurality of sub-modules (114). Each sub-module (112, 114) is operable to function as a controlled voltage source.

No. of Pages : 22 No. of Claims : 20

(12) PATENT APPLICATION PUBLICATION
(21) Application No.673/KOL/2014 A
(19) INDIA
(22) Date of filing of Application :20/06/2014
(43) Publication Date : 25/12/2015

(54) Title of the invention : 'AN APPARATUS FOR WELDING PLATEN INLET HEADERS, DE SUPER HEATER LINES, AND RECIRCULATION SYSTEM OF A HIGH PRESSURE BIOLER IN SAW (SUBMERGED ARC WELDING) AUTOMATIC WELDING MACHINE'

(51) International classification	:B23K 37/00
(31) Priority Document No	:NA
(32) Priority Date	:NA
(33) Name of priority country	:NA
(86) International Application No	:NA
Filing Date	:NA
(87) International Publication No	: NA
(61) Patent of Addition to Application Number	:NA
Filing Date	:NA
(62) Divisional to Application Number	:NA
Filing Date	:NA

(71)**Name of Applicant :**
1)BHARAT HEAVY ELECTRICALS LIMITED
Address of Applicant :REGIONAL OPERATIONS DIVISION(ROD), PLOT NO:9/1, DJBLOCK 3RD FLOOR, KARUNAMOYEE,SALTLAKE CITY, KOLKATA-700091, HAVING ITS REGISTERED OFFICE AT BHEL HOUSE, SIRI FORT, NEW DELHI - 110049, INDIA. West Bengal
(72)**Name of Inventor :**
1)RAVICHANDRAN SATISH KUMAR
2)JAYARAMAN VEERAMANI
3)RAMAKRISHNAN VENKATARAMAN
4)RENGARAJAN RAGUPATHY
5)GENGAN MOHAN

(57) Abstract :
The invention relates to an apparatus for welding Platen inlet headers, De super heater lines, and Recirculation system of a high pressure boiler in SAW (Submerged Arc Welding) automatic welding machine, the apparatus comprising a counter weight block (4) with a fulcrum at the bottom for interlocking the block (4) with a counter weight interlock gear (5) to fix in a particular position two weight carrying beams (8) so as to conduct welding of an inter connecting box channel (6) to lift the sub-assembly to fix on the welding machine; a supporting beam (7) provided for welding between the box channel (6) and a circular pipe (9); a clamping device (2) provided to clamp the counter weight block (4);a vertical screw (10) for moving up and down to tighten or loosen the counter weight block (4) to move the assembly in horizontal directions after lifting from the fulcrum; several gripping pads (3) to avoid slipping of the counter weight block (4); wherein the circular pipe (9) is holding a work piece (11) concentrically loaded on the machine by adjusting four annular screws (12) provided on the circular pipe (9), and wherein both of the counter weight carrying beam (8) and supporting beam (7) are welded in the circular pipe (9).

No. of Pages : 11 No. of Claims : 2

(12) PATENT APPLICATION PUBLICATION
(19) INDIA
(22) Date of filing of Application :24/03/2015
(21) Application No.798/KOLNP/2015 A
(43) Publication Date : 25/12/2015

(54) Title of the invention : CONTROL AND MANAGEMENT OF POWER SAVING LINK STATES IN VECTORED TDD TRANSMISSION SYSTEMS

(51) International classification :H04M11/06,H04B3/46
(31) Priority Document No :61/776479
(32) Priority Date :11/03/2013
(33) Name of priority country :U.S.A.
(86) International Application No :PCT/US2014/023631
Filing Date :11/03/2014
(87) International Publication No :WO 2014/164854
(61) Patent of Addition to Application Number :NA
Filing Date :NA
(62) Divisional to Application Number :NA
Filing Date :NA

(71)**Name of Applicant :**
1)HUAWEI TECHNOLOGIES CO. LTD.
Address of Applicant :Huawei Administration Building Bantian Longgang District Shenzhen 518129 China
(72)**Name of Inventor :**
1)HUAWEI TECHNOLOGIES CO. LTD.

(57) Abstract :
An apparatus comprising a first transceiver unit (TU) for coupling to a first subscriber line at least one next TU for coupling to at least one next subscriber line and a processor coupled to the first TU and the at least one next TU wherein the processor is configured to determine a link state in which data transmission is disabled for the duration of one or more symbols in a superframe instruct the first TU to operate in the determined link state and coordinate data transmission by the first TU and the at least one next TU to avoid an increase of crosstalk from the first line to the at least one next subscriber line due to the first TU operating in the determined link state.

No. of Pages : 51 No. of Claims : 31

(12) PATENT APPLICATION PUBLICATION
(21) Application No.799/KOLNP/2015 A
(19) INDIA
(22) Date of filing of Application :24/03/2015
(43) Publication Date : 25/12/2015

(54) Title of the invention : SURFACE-COATED CUTTING TOOL

(51) International classification :B23B27/14,C23C16/36
(31) Priority Document No :2012-187543
(32) Priority Date :28/08/2012
(33) Name of priority country :Japan
(86) International Application No :PCT/JP2013/073026
Filing Date :28/08/2013
(87) International Publication No :WO 2014/034730
(61) Patent of Addition to Application Number :NA
Filing Date :NA
(62) Divisional to Application Number :NA
Filing Date :NA

(71)**Name of Applicant :**
1)MITSUBISHI MATERIALS CORPORATION
Address of Applicant :3-2, Otemachi 1-chome, Chiyoda-ku, Tokyo 1008117 JAPAN
(72)**Name of Inventor :**
1)TATSUOKA SHO
2)IWASAKI NAOYUKI
3)YAMAGUCHI KENJI
4)OSADA AKIRA

(57) Abstract :
Provided is a coated tool in which a hard coating layer has excellent toughness and heat-blocking effects, the coated tool exhibiting excellent chipping resistance and defect resistance over a long period of use. The hard coating layer of this coated tool has an alternating stacked structure composed of chemically vapor-deposited area A and area B layers expressed by the compositional formula (Ti1-xAlx)(CyN1-y), and having a total average layer thickness of 1 to 10 μm. The area A layer satisfies the relationships $0.70 \leq x \leq 0.80$ and $0.0005 \leq y \leq 0.005$, and has an average particle width W of 0.1 μm or less and an average particle length L of 0.1 μm or less. The area B layer satisfies the relationships $0.85 \leq x \leq 0.95$ and $0.0005 \leq y \leq 0.005$, and has an average particle width W of 0.1 to 2.0 μm or less and an average particle length L of 0.5 to 5.0 μm. The topmost layer of the alternating stacked structure is an area A layer.

No. of Pages : 50 No. of Claims : 10

(12) PATENT APPLICATION PUBLICATION
(21) Application No.922/KOLNP/2015 A
(19) INDIA
(22) Date of filing of Application :06/04/2015
(43) Publication Date : 25/12/2015

(54) Title of the invention : A PROCESS FOR DISSOLVING A POLYMERIC MATERIAL WITH AN IONIC LIQUID, THE IONIC LIQUID.

(51) International classification :B01J 31/04
(31) Priority Document No :0407908.3
(32) Priority Date :07/04/2004
(33) Name of priority country :U.K.
(86) International Application No :PCT/GB2005/001364
Filing Date :07/04/2005
(87) International Publication No :WO 2005/097731
(61) Patent of Addition to Application Number :NA
Filing Date :NA
(62) Divisional to Application Number :3208/KOLNP/2006
Filed on :03/11/2006

(71)**Name of Applicant :**
1)INNOVIA FILMS LIMITED
Address of Applicant :STATION ROAD, WIGTON CUMBRIA CA7 9BG, UNITED KINGDOM.
(72)**Name of Inventor :**
1)WALKER, ADAM, JOHN

(57) Abstract :
The present invention relates to ionic liquid comprising an anion and a cation wherein the cation is a primary, secondary or tertiary ammonium ion containing a protonated nitrogen atom.

No. of Pages : 41 No. of Claims : 7

(12) PATENT APPLICATION PUBLICATION
(19) INDIA
(22) Date of filing of Application :24/03/2015
(21) Application No.800/KOLNP/2015 A
(43) Publication Date : 25/12/2015

(54) Title of the invention : PRO-NEUROGENIC COMPOUNDS

(51) International classification :A01N43/38,A61K31/405,C07D209/82
(31) Priority Document No:13/594,223
(32) Priority Date :24/08/2012
(33) Name of priority country :U.S.A.
(86) International Application No :PCT/US2012/052283
Filing Date :24/08/2012
(87) International Publication No :WO 2014/031125
(61) Patent of Addition to Application Number :NA
Filing Date :NA
(62) Divisional to Application Number :NA
Filing Date :NA

(71)**Name of Applicant :**
1)BOARD OF REGENTS OF THE UNIVERSITY OF TEXAS SYSTEM
Address of Applicant :201 West 7th Street, Austin, Texas 78701 UNITED STATES OF AMERICA.
(72)**Name of Inventor :**
1)MCKNIGHT, Steven L.
2)PIEPER, Andrew A.
3)READY, Joseph M.
4)DE BRABANDER, Jef, K.

(57) Abstract :
This technology relates generally to compounds and methods for stimulating neurogenesis (e.g., post-natal neurogenesis, including post-natal hippocampal and hypothalamic neurogenesis) and/or protecting neuronal cell from cell death. Various compounds are disclosed herein. In vivo activity tests suggest that these compounds may have therapeutic benefits in neuropsychiatric and/or neurodegenerative diseases such as schizophrenia, major depression, bipolar disorder, normal aging, epilepsy, traumatic brain injury, post-traumatic stress disorder, Parkinsons disease, Alzheimers disease, Down syndrome, spinocerebellar ataxia, amyotrophic lateral sclerosis, Huntingtons disease, stroke, radiation therapy, chronic stress, abuse of a neuro-active drug, retinal degeneration, spinal cord injury, peripheral nerve injury, physiological weight loss associated with various conditions, as well as cognitive decline associated with normal aging, chemotherapy, and the like.

No. of Pages : 389 No. of Claims : 20

(12) PATENT APPLICATION PUBLICATION
(19) INDIA
(22) Date of filing of Application :25/03/2015
(21) Application No.801/KOLNP/2015 A
(43) Publication Date : 25/12/2015

(54) Title of the invention : IMPROVED ELECTRODEIONIZATION MODULE AND APPARATUS

(51) International classification :C02F1/469,B01D61/48
(31) Priority Document No :12290283.6
(32) Priority Date :27/08/2012
(33) Name of priority country :EPO
(86) International Application No :PCT/EP2013/002205
Filing Date :25/07/2013
(87) International Publication No :WO 2014/032751
(61) Patent of Addition to Application Number :NA
Filing Date :NA
(62) Divisional to Application Number :NA
Filing Date :NA

(71)**Name of Applicant :**
1)MERCK PATENT GMBH
Address of Applicant :Frankfurter Strasse 250 64293 Darmstadt Germany
(72)**Name of Inventor :**
1)GRABOWSKI Andrej
2)GROSS Julien

(57) Abstract :
The present invention relates to an improved electrodeionization (EDI) module and apparatus adapted to transfer ions present in a liquid under the influence of an electric field. In particular the EDI module according to the present invention comprises a cathode (7) and an anode (8) spaced apart from the cathode (7) having therebetween at least two ion permeable membranes comprising at least one anion permeable membrane (2) and at least one cation permeable membrane (1) and delimiting one or more diluate compartments (5) and one or more concentrate compartments (6) wherein at least one diluate compartment (5) contains at least two blocks a first block containing anion exchange material (4) and a second block containing cation exchange material (3) wherein a surface of said first block is adjacent to an anion permeable membrane (2) and a surface of said second block is adjacent to a cation permeable membrane (1) and wherein said two blocks are arranged side by side in a liquid passing direction thereby forming an interface between said two blocks such that said interface is spaced apart from said anion permeable membrane (2) and said cation permeable membrane (1) and a straight line in a liquid passing direction may pass the interface between said two blocks at least one time.

No. of Pages : 53 No. of Claims : 15

(12) PATENT APPLICATION PUBLICATION
(19) INDIA
(22) Date of filing of Application :06/04/2015
(21) Application No.924/KOLNP/2015 A
(43) Publication Date : 25/12/2015

(54) Title of the invention : A PLATE ASSEMBLY

(51) International classification :G02B 6/46
(31) Priority Document No :61/500,769
(32) Priority Date :24/06/2011
(33) Name of priority country :U.S.A.
(86) International Application No :PCT/US2012/043827
Filing Date :22/06/2012
(87) International Publication No :WO 2012/178070
(61) Patent of Addition to Application Number :NA
Filing Date :NA
(62) Divisional to Application Number :3714//KOLNP/2013
Filed on :16/12/2013

(71)**Name of Applicant :**
1)ADC TELECOMMUNICATIONS, INC.
Address of Applicant :1050 WESTLAKES DRIVE, BERWYN, PENNSYLVANIA, 19312, UNITED STATES OF AMERICA.
(72)**Name of Inventor :**
1)COAN, JONATHAN, WALTER
2)KRAMPOTICH, DENNIS,
3) KAML JONATHAN, R

(57) Abstract :
Certain types of fiber termination enclosures include an enclosure and at least one of a plurality of plate module mounting assemblies. Example plate module mounting assemblies include a termination panel plate assembly; a splice tray plate assembly; a cable spool plate assembly; and a drop-in plate assembly. Example cable spool plate assemblies include a cable spool arrangement rotationally coupled to a mounting plate, which fixedly mounts within the enclosure housing. A stand-off mount element may be disposed on the front of the cable spool arrangement to rotate in unison with the cable spool arrangement. The stand-off mount element may include one or more termination adapters.

No. of Pages : 46 No. of Claims : 8

(12) PATENT APPLICATION PUBLICATION
(19) INDIA
(22) Date of filing of Application :06/04/2015
(21) Application No.925/KOLNP/2015 A
(43) Publication Date : 25/12/2015

(54) Title of the invention : SEGMENTED VALVE PACKING GLAND

(51) International classification :F16K3/02
(31) Priority Document No :61/697,661
(32) Priority Date :06/09/2012
(33) Name of priority country :U.S.A.
(86) International Application No :PCT/US2013/058327
Filing Date :05/09/2013
(87) International Publication No :WO 2014/039720
(61) Patent of Addition to Application Number :NA
Filing Date :NA
(62) Divisional to Application Number :NA
Filing Date :NA

(71)**Name of Applicant :**
1)PENTAIR FLOW SERVICES AG
Address of Applicant :Freier Platz 10, CH-8200 Schaffhausen SWITZERLAND
(72)**Name of Inventor :**
1)MURAN, JOHN, W.
2)KELLEY, JOHN

(57) Abstract :
A packing gland for a valve wherein the packing gland includes a top portion for receiving a gate. The packing gland includes first and second longitudinal sections of packing material for sealing the gate. In addition, the packing gland includes first and second stuffer elements located adjacent the first and second longitudinal portions. The packing gland also includes a plurality of clamp elements located adjacent the first and second stuffer elements, wherein the clamp elements provide pressure on selected portions of the first and second stuffer elements to compress corresponding selected portions of the first and second longitudinal sections of packing material.

No. of Pages : 17 No. of Claims : 12

(12) PATENT APPLICATION PUBLICATION
(19) INDIA
(22) Date of filing of Application :27/07/2009
(21) Application No.2716/KOLNP/2009 A
(43) Publication Date : 25/12/2015

(54) Title of the invention : POTENTIOMETER

(51) International classification :G01R17/20
(31) Priority Document No :102007004536.2
(32) Priority Date :24/01/2007
(33) Name of priority country :Germany
(86) International Application No :PCT/IB2008/001100
Filing Date :21/01/2008
(87) International Publication No :WO 2008/090478
(61) Patent of Addition to Application Number :NA
Filing Date :NA
(62) Divisional to Application Number :NA
Filing Date :NA

(71)**Name of Applicant :**
1)OTTO BOCK HEALTHCARE PRODUCTS GMBH
Address of Applicant :KAISERSTRASSE 39 A-1070 WIEN Austria
(72)**Name of Inventor :**
1)INSCHLAG, JOSEF
2)EDER, MARCUS

(57) Abstract :
The invention relates to a potentiometer comprising (a) at least two electrically conducting segments (12) each of which has a contact end (14), that is bordered by a circumferential edge (16) and which adjoin each other in a flush manner by means of one respective section (18,20) of the edges (16) thereof, and (b) a connecting device (38) for electrically connecting a first contact point (P1) in a first seg ment to at least one second contact point (P2, P3) in a second segment that is different from the first segment.

No. of Pages : 55 No. of Claims : 33

(12) PATENT APPLICATION PUBLICATION
(19) INDIA
(22) Date of filing of Application :25/03/2015
(21) Application No.323/KOL/2015 A
(43) Publication Date : 25/12/2015

(54) Title of the invention : A PROJECT FOR ISOLATING THE MIXTURE OF MONO- AND DICARBOXYLIC ACIDS FROM THE PRODUCT OF CYCLOHEXANE OXIDATION

(51) International classification :C07C29/50
(31) Priority Document No :P.407794
(32) Priority Date :04/04/2014
(33) Name of priority country :Poland
(86) International Application No :NA
Filing Date :NA
(87) International Publication No : NA
(61) Patent of Addition to Application Number :NA
Filing Date :NA
(62) Divisional to Application Number :NA
Filing Date :NA

(71)**Name of Applicant :**
1)GRUPA AZOTY S.A.
Address of Applicant :UL. E. KWIATKOWSKIEGO 8, 33-100 TARNW, POLAND
(72)**Name of Inventor :**
1)MALINOWSKI TOMASZ
2)GRUSZKA MATEUSZ
3)GAWRON WIESŁAW
4)MACISZEWSKI LESZEK
5)WAIS JAN
6)SOLAKIEWICZ JACEK
7)SIEŃSKI ROMAN
8)BYSIEK DOMINIK
9)RYGIEL STANISŁAW

(57) Abstract :
A process for isolating the mixture of mono- and dicarboxylic acids from the product of cyclohexane oxidation, wherein the mixture of esters and acids being a heavy residue after heteroazeotropic distillation of cyclohexanol and cyclohexanone is cooled down to the temperature of 50 - 95°C, and subsequently decompressed to the atmospheric pressure and subjected to separation into an organic layer and an aqueous layer, the latter containing 5 - 30% of mono- and dicarboxylic acids, being then subjected to a further work- up.

No. of Pages : 17 No. of Claims : 5

(12) PATENT APPLICATION PUBLICATION
(19) INDIA
(22) Date of filing of Application :01/04/2015
(21) Application No.378/KOL/2015 A
(43) Publication Date : 25/12/2015

(54) Title of the invention : MEDICAL IMAGE PRINTING DEVICE AND SYSTEM

(51) International classification :G06F3/12
(31) Priority Document No :201410136949.4
(32) Priority Date :04/04/2014
(33) Name of priority country :China
(86) International Application No :NA
Filing Date :NA
(87) International Publication No : NA
(61) Patent of Addition to Application Number :NA
Filing Date :NA
(62) Divisional to Application Number :NA
Filing Date :NA

(71)**Name of Applicant :**
1)RICOH COMPANY, LTD.
Address of Applicant :3-6, NAKAMAGOME 1-CHOME, OHTA-KU, TOKYO 143-8555 JAPAN
(72)**Name of Inventor :**
1)HUACHEN LI

(57) Abstract :
Disclosed is a medical image printing device for printing, on the basis of printing image data, a diagnostic image on a paper medium, in which the color values of each pixel are obtained from the printing image data; each pixel is determined as a color pixel or a grayscale pixel, and the grayscale pixel is further determined as a black pixel or a white-gray pixel; and each pixel is printed on the basis of the reset color values of the corresponding pixel.

No. of Pages : 70 No. of Claims : 10

(12) PATENT APPLICATION PUBLICATION
(21) Application No.808/KOLNP/2015 A
(19) INDIA
(22) Date of filing of Application :25/03/2015
(43) Publication Date : 25/12/2015

(54) Title of the invention : INCREASING RESOLUTION OF IMAGES OBTAINED FROM A THREE-DIMENSIONAL MEASUREMENT SYSTEM

(51) International classification	:G01C3/08,G01P3/36,G01S13/89	(71)**Name of Applicant :**
(31) Priority Document No	:61/696,447	**1)DIGITAL SIGNAL CORPORATION**
(32) Priority Date	:04/09/2012	Address of Applicant :P.O. Box 9807, Alexandria, VA 22304 UNITED STATES OF AMERICA.
(33) Name of priority country	:U.S.A.	(72)**Name of Inventor :**
(86) International Application No	:PCT/US2013/056537	**1)SEBASTIAN, RICHARD, L.**
Filing Date	:24/08/2013	**2)ZHELEZNYAK, ANATOLEY,T.**
(87) International Publication No	:WO 2014/039295	
(61) Patent of Addition to Application Number	:NA	
Filing Date	:NA	
(62) Divisional to Application Number	:NA	
Filing Date	:NA	

(57) Abstract :
A system uses range and Doppler velocity measurements from a lidar system and images from a video system to estimate a six degree-of-freedom trajectory (6DOF) of a target. The 6DOF transformation parameters are used to transform multiple images to the frame time of a selected image, thus obtaining multiple images at the same frame time. These multiple images may be used to increase a resolution of the image at each frame time, obtaining the collection of the superresolution images.

No. of Pages : 49 No. of Claims : 4

(12) PATENT APPLICATION PUBLICATION
(19) INDIA
(22) Date of filing of Application :06/04/2015
(21) Application No.934/KOLNP/2015 A
(43) Publication Date : 25/12/2015

(54) Title of the invention : TRANSCRIPTIONAL GENE SILENCING OF ENDOGENES IN PLANTS

(51) International classification :C12N15/82,C12N5/04,C12Q1/68
(31) Priority Document No :61/698,203
(32) Priority Date :07/09/2012
(33) Name of priority country :U.S.A.
(86) International Application No :PCT/US2013/056865
Filing Date :27/08/2013
(87) International Publication No :WO 2014/039330
(61) Patent of Addition to Application Number :NA
Filing Date :NA
(62) Divisional to Application Number :NA
Filing Date :NA

(71)**Name of Applicant :**
1)THE ROCKEFELLER UNIVERSITY
Address of Applicant :1230 York Avenue New York, NEW YORK 10021 UNITED STATES OF AMERICA.
(72)**Name of Inventor :**
1)CHUA, NAM-HAI
2)DENG, SHULIN
3)DAI, HONG-ZHENG
4)NIU, QI-WEN
5)WANG, HUANG
6)ARENAS HUERTERO, CATALINA

(57) Abstract :
The present invention relates to transcriptional gene silencing (TGS) of endogenes in plants, plant tissue and plant cells. More specifically, the present invention relates to nucleic acid constructs that are capable of TGS of endogenes in plants, plant tissue and plant cells. The present invention further relates to methods of reducing endogenous gene expression in plants, plant tissues or plant cells by TGS using the nucleic acid constructs of the invention.

No. of Pages : 66 No. of Claims : 45

(12) PATENT APPLICATION PUBLICATION
(19) INDIA
(22) Date of filing of Application :06/04/2015
(21) Application No.935/KOLNP/2015 A
(43) Publication Date : 25/12/2015

(54) Title of the invention : MANAGING ITEM QUERIES

(51) International classification :G06F17/30
(31) Priority Document No :13/631,768
(32) Priority Date :28/09/2012
(33) Name of priority country :U.S.A.
(86) International Application No :PCT/US2013/062461
Filing Date :27/09/2013
(87) International Publication No :WO 2014/052922
(61) Patent of Addition to Application Number :NA
Filing Date :NA
(62) Divisional to Application Number :NA
Filing Date :NA

(71)**Name of Applicant :**
1)EXPEDIA, INC.
Address of Applicant :333 - 108th Avenue, N.E., Bellevue WA 98004 UNITED STATES OF AMERICA.
(72)**Name of Inventor :**
1)FLEISHMAN, DAVID, ELIAS
2)BURGER, JOANNE, LOUISE
3)KEFFELER, BRIAN, SCOTT
4)MILLER, JEFFREY, STEWART
5)FRIEDMAN, DANIEL, HARRISON
6)CROWE, GLENN, PADGETT
7)YUNG, VINCENT
8)GOPALAN, MURARI
9)KIM, JOHN, C.
10)TUAZON, ANNE, MARIE

(57) Abstract :
A network-based service may be provided for facilitating queries for a number of items, such as travel services. A user may submit a query including criteria for determining one or more relevant items. Based on the submitted query, the network- based service may present the user with information regarding the actions of other similar users of the network-based service, such as searches performed by the other users. Based on this information, the user may elect to supplement the current query to conform to the actions for other users. In some embodiments, actions by other users may be based at least in part on a category of the querying user. By presenting actions of similar users, a current user may be enabled to select the most relevant query terms for identifying a desired item.

No. of Pages : 49 No. of Claims : 15

(12) PATENT APPLICATION PUBLICATION
(21) Application No.756/KOLNP/2015 A
(19) INDIA
(22) Date of filing of Application :19/03/2015
(43) Publication Date : 25/12/2015

(54) Title of the invention : METHODS AND ARRANGEMENTS FOR RESOURCE ALLOCATION

(51) International classification :H04W28/06
(31) Priority Document No :NA
(32) Priority Date :NA
(33) Name of priority country :NA
(86) International Application No :PCT/SE2012/050906
Filing Date :27/08/2012
(87) International Publication No :WO 2014/035301
(61) Patent of Addition to Application Number :NA
Filing Date :NA
(62) Divisional to Application Number :NA
Filing Date :NA

(71)**Name of Applicant :**
1)TELEFONAKTIEBOLAGET L M ERICSSON (publ)
Address of Applicant :SE 164 83 Stockholm Sweden
(72)**Name of Inventor :**
1)ERIKSSON Erik
2)RUNE Johan

(57) Abstract :
A user equipment (UE) a network node and methods thereof for enabling dynamic resource allocation in a wireless communication system is disclosed. The UE and the network node have proactively agreed upon (31) at least one pre configured transport block size. In embodiments of the invention the assembling of the transport block to be transmitted from the UE is started (33) prior to the reception (35) of the uplink grant and thereby the end to end delay and/or transmission delay is improved.

No. of Pages : 49 No. of Claims : 50

(12) PATENT APPLICATION PUBLICATION
(19) INDIA
(22) Date of filing of Application :19/03/2015
(21) Application No.757/KOLNP/2015 A
(43) Publication Date : 25/12/2015

(54) Title of the invention : METHOD AND APPARATUS FOR HANDLING HARVESTED ROOT CROPS

(51) International classification :G01N21/85,B07C5/342
(31) Priority Document No :2012/0388
(32) Priority Date :07/09/2012
(33) Name of priority country :Ireland
(86) International Application No :PCT/EP2013/068031
Filing Date :30/08/2013
(87) International Publication No :WO 2014/037290
(61) Patent of Addition to Application Number :NA
Filing Date :NA
(62) Divisional to Application Number :NA
Filing Date :NA

(71)**Name of Applicant :**
1)TOMRA SORTING LIMITED
Address of Applicant :12 Fitzwilliam Place, Dublin, 2 IRELAND
(72)**Name of Inventor :**
1)McGLOUGHLIN, JOHN
2)FROST, JAMES
3)MOYNIHAN, MAURICE

(57) Abstract :
The present invention relates to a method for handling harvested root crops such as potatoes. The method comprises the steps of optically imaging (i.e. by the hyper-spectral imaging system) a bulk flow of a harvested root crop to produce image data and analysing the image data to identify discrete objects within the bulk flow. Each identified object is categorised as either acceptable (44) or unacceptable (40) based on a comparison with at least one discriminator and objects classified as unacceptable are removed (by the ejector actuator 38) from the bulk flow to provide a sorted flow of the harvested root crop.

No. of Pages : 24 No. of Claims : 20

(12) PATENT APPLICATION PUBLICATION
(19) INDIA
(22) Date of filing of Application :27/03/2015
(21) Application No.823/KOLNP/2015 A
(43) Publication Date : 25/12/2015

(54) Title of the invention : A CATHODE AND METHOD OF MANUFACTURING

(51) International classification :C25C7/02,C25C1/12,C25C5/00
(31) Priority Document No :2012904201
(32) Priority Date :26/09/2012
(33) Name of priority country :Australia
(86) International Application No :PCT/AU2013/001109
Filing Date :26/09/2013
(87) International Publication No :WO 2014/047689
(61) Patent of Addition to Application Number :NA
Filing Date :NA
(62) Divisional to Application Number :NA
Filing Date :NA

(71)**Name of Applicant :**
1)STEELMORE HOLDINGS PTY LTD
Address of Applicant :7 Barrinia Street Slacks Creek Queensland 4127 Australia
2)GLENCORE TECHNOLOGY PTY LTD
(72)**Name of Inventor :**
1)STEELMORE HOLDINGS PTY LTD
2)GLENCORE TECHNOLOGY PTY LTD

(57) Abstract :
An electrode for electrolytic processes the electrode comprising a conducting bar and a plate attached to the conducting bar wherein the conducting bar has a conducting member attached thereto to increase the conductivity of the conducting bar.

No. of Pages : 26 No. of Claims : 21

(12) PATENT APPLICATION PUBLICATION
(21) Application No.824/KOLNP/2015 A
(19) INDIA
(22) Date of filing of Application :30/03/2015
(43) Publication Date : 25/12/2015

(54) Title of the invention : PANEL WITH HIGH FREQUENCY TRANSMISSION

(51) International classification :B32B17/10
(31) Priority Document No :12188534.7
(32) Priority Date :15/10/2012
(33) Name of priority country :EPO
(86) International Application No :PCT/EP2013/070233
Filing Date :27/09/2013
(87) International Publication No :WO 2014/060203
(61) Patent of Addition to Application Number :NA
Filing Date :NA
(62) Divisional to Application Number :NA
Filing Date :NA

(71)**Name of Applicant :**
1)SAINT GOBAIN GLASS FRANCE
Address of Applicant :18 avenue dAlsace F 92400 Courbevoie France
(72)**Name of Inventor :**
1)SAINT GOBAIN GLASS FRANCE

(57) Abstract :
The invention relates to a panel (10) comprising at least: at least one first panel (1.1) having an outer face (III) and an inner face (IV) at least one transparent electrically conductive coating (3) which is arranged on the outer face (III) and/or on the inner face (IV) of the first panel (1.1) and at least one region (9) having at least one outer de coated structure (4.1) and one inner de coated structure (4.2) the transparent electrically conductive coating (3) being located between the outer de coated structure (4.1) and the inner de coated structure (4.2) and inside the inner de coated structure (4.2).

No. of Pages : 63 No. of Claims : 16

(12) PATENT APPLICATION PUBLICATION
(19) INDIA
(22) Date of filing of Application :07/04/2015
(21) Application No.946/KOLNP/2015 A
(43) Publication Date : 25/12/2015

(54) Title of the invention : IMMUNOGENIC COMPOSITION

(51) International classification :A61K39/09,C07K14/315
(31) Priority Document No :1218660.7
(32) Priority Date :17/10/2012
(33) Name of priority country :U.K.
(86) International Application No :PCT/EP2013/071477
Filing Date :15/10/2013
(87) International Publication No :WO 2014/060385
(61) Patent of Addition to Application Number :NA
Filing Date :NA
(62) Divisional to Application Number :NA
Filing Date :NA

(71)**Name of Applicant :**
1)GLAXOSMITHKLINE BIOLOGICALS S.A.
Address of Applicant :Rue de L'Institut 89, B-1330 Rixensart BELGIUM
(72)**Name of Inventor :**
1)VERLANT, VINCENT

(57) Abstract :
The present invention relates to immunogenic compositions comprising 26µg-45µg of pneumolysin and/or PhtD, vaccines comprising the immunogenic compositions and their use in medicine.

No. of Pages : 92 No. of Claims : 62

(12) PATENT APPLICATION PUBLICATION
(21) Application No.947/KOLNP/2015 A
(19) INDIA
(22) Date of filing of Application :07/04/2015
(43) Publication Date : 25/12/2015

(54) Title of the invention : METHOD AND APPARATUS FOR ELECTROSTATIC PAINTING

(51) International classification :B05B5/03,B05B5/16,B05B7/14
(31) Priority Document No :FI2012A000205
(32) Priority Date :10/10/2012
(33) Name of priority country :Italy
(86) International Application No :PCT/IT2013/000040
Filing Date :08/02/2013
(87) International Publication No :WO 2014/057508
(61) Patent of Addition to Application Number :NA
Filing Date :NA
(62) Divisional to Application Number :NA
Filing Date :NA

(71)**Name of Applicant :**
1)EUROSIDER S.A.S. DI MILLI OTTAVIO & C.
Address of Applicant :Piazzale Thailandia 6, I-58100 Grosseto ITALY
(72)**Name of Inventor :**
1)MILLI, OTTAVIO

(57) Abstract :
A device and method for electrostatic powder coating comprising the steps of obtaining continuously a working fluid constituted by air deprived of undesirable substances, supplying said working fluid, between 0.5 bar and 10 bar, in a container (2) containing an amount of coating powder (3), extracting from said container (2) a first flow made up of working fluid and powder, atomizing said flow of working fluid and powder with working fluid at a pressure of between 0.5 bar and 10 bar, supplying working fluid at a pressure of between 0.5 bar and 10 bar to create a second transport flow made up of working fluid and atomized powder, charging said second flow of working fluid and atomized powder electrostatically under pressure, and sending said second electrostatically charged flow of working fluid and atomized powder onto a substrate (1), at a temperature of between -15°C and +45°C.

No. of Pages : 19 No. of Claims : 13

(12) PATENT APPLICATION PUBLICATION
(21) Application No.767/KOLNP/2015 A
(19) INDIA
(22) Date of filing of Application :20/03/2015
(43) Publication Date : 25/12/2015

(54) Title of the invention : METHOD FOR ENHANCING FATIGUE DURABILITY OF A CONVEYOR BELT OF A STRAND SINTERING FURNACE, AND CONVEYOR BELT

(51) International classification :B65G15/48,C21D7/04,F27B21/06
(31) Priority Document No :20126061
(32) Priority Date :09/10/2012
(33) Name of priority country :Finland
(86) International Application No :PCT/FI2013/050971
Filing Date :07/10/2013
(87) International Publication No :WO 2014/057170
(61) Patent of Addition to Application Number :NA
Filing Date :NA
(62) Divisional to Application Number :NA
Filing Date :NA

(71)**Name of Applicant :**
1)OUTOTEC (FINLAND) OY
Address of Applicant :Rauhalanpuisto 9, FI-02230 Espoo FINLAND
(72)**Name of Inventor :**
1)LAIHONEN, PAAVO
2)LINDGREN, MARI

(57) Abstract :
The invention relates to a method for enhancing fatigue durability of a conveyor belt (1) of a strand sintering furnace, and a conveyor belt. The conveyor belt is formed from a number of rectangular steel plate elements (2) that are sequentially welded to each other by weld seams (3). Each plate element (2) includes a plurality of holes (4) arranged into a plurality of groups (5) of perforations to enable the flow-through of the gas used in the sintering process. The conveyor belt (1) is treated to create compressive residual stresses at a surface of the conveyor belt at least in critical regions which are susceptible to fatigue breakage. The conveyor belt (1) includes compressive residual stresses at a surface of the conveyor belt at least in critical regions which are susceptible to fatigue breakage. Thereby the fatigue durability of the conveyor belt is improved.

No. of Pages : 19 No. of Claims : 15

(12) PATENT APPLICATION PUBLICATION
(21) Application No.769/KOLNP/2015 A
(19) INDIA
(22) Date of filing of Application :20/03/2015
(43) Publication Date : 25/12/2015

(54) Title of the invention : PERMANENT-MAGNET AC POWER GENERATOR

(51) International classification :H02K3/28
(31) Priority Document No :2012-190249
(32) Priority Date :30/08/2012
(33) Name of priority country :Japan
(86) International Application No :PCT/JP2013/005139
Filing Date :30/08/2013
(87) International Publication No :WO 2014/034136
(61) Patent of Addition to Application Number :NA
Filing Date :NA
(62) Divisional to Application Number :NA
Filing Date :NA

(71)**Name of Applicant :**
1)KAWAMURA, HIDEO
Address of Applicant :8-13-5, Okada, Samukawamachi, Kohzagun, Kanagawa 2530105 JAPAN
2)KAWAMURA, MEGUMI
(72)**Name of Inventor :**
1)KAWAMURA, Hideo

(57) Abstract :
[Problem] To increase the output with this permanent-magnet power generator under a limited space and obtain a compact, light weight, high output power generator. [Solution] A plurality of U-phase windings corresponding to one magnetic pole include, for example, first and second windings (19, 24). The first and second windings (19, 24) are wound in a short pitch winding manner. The winding starts of the first and second windings (19, 24) are shifted by at least one tooth. The first and second windings (19, 24) are wound so that a winding angle occupied by the first and second windings (19, 24) (inter-slot angle from the winding start of the first winding (19) to the winding end of the second winding (24)) corresponds to a pole angle. The first and second windings (19, 24) in the V-phase are disposed in the same relationship as in the U-phase at the position delayed by an electric angle of 120° with respect to the U-phase, and those in the W-phase are disposed at the position delayed by an additional 120°. The outputs of the first and second windings (19, 24) are then each rectified, subsequently joined together, and used by adding currents.

No. of Pages : 45 No. of Claims : 8

(12) PATENT APPLICATION PUBLICATION
(21) Application No.830/KOLNP/2015 A
(19) INDIA
(22) Date of filing of Application :30/03/2015
(43) Publication Date : 25/12/2015

(54) Title of the invention : ELECTROCHROMIC COMPOUND, ELECTROCHROMIC COMPOSITION, AND DISPLAY ELEMENT

(51) International classification :C07F9/58,C07F9/6509,C09K9/02
(31) Priority Document No :2012-241679
(32) Priority Date :01/11/2012
(33) Name of priority country :Japan
(86) International Application No :PCT/JP2013/080363
Filing Date :01/11/2013
(87) International Publication No :WO 2014/069675
(61) Patent of Addition to Application Number :NA
Filing Date :NA
(62) Divisional to Application Number :NA
Filing Date :NA

(71)**Name of Applicant :**
1)RICOH COMPANY, LTD.
Address of Applicant :3-6, Nakamagome 1-chome, Ohta-ku, Tokyo 1438555 JAPAN
(72)**Name of Inventor :**
1)SAGISAKA ,Toshiya
2)TAKAHASHI Hiroyuki
3)OKADA Takashi
4)HIRANO Shigenobu
5)YASHIRO Tohru
6)FUJIMURA Koh
7)NAIJO Yoshihisa
8)OKADA Yoshinori
9)TSUJI Kazuaki
10)KIM Sukchan
11)YUTANI Keiichiroh
12)HORIUCHI Tamotsu
13)INOUE Mamiko

(57) Abstract :
To provide an electrochromic compound, represented by the following general formula (I): General Formula (I) where X1, X2, X3, X4, X5, X6, X7 and X8 are each independently a hydrogen atom or a monovalent substituent; R1 and R2 are each independently a monovalent substituent; A- and B- are each independently a monovalent anion; and Y is represented by the following general formula (II) or (III): General Formula (II) General Formula (III) where X9, X10, X11, X12, X13, X14, X15, X16, X17, and X18 are each independently a hydrogen atom or a monovalent substituent.

No. of Pages : 72 No. of Claims : 10

(12) PATENT APPLICATION PUBLICATION
(19) INDIA
(22) Date of filing of Application :07/04/2015
(21) Application No.951/KOLNP/2015 A
(43) Publication Date : 25/12/2015

(54) Title of the invention : METHODS OF PROCESSING SPERM FOR SEX SORTING

(51) International classification :A01N1/02
(31) Priority Document No :61/710,343
(32) Priority Date :05/10/2012
(33) Name of priority country :U.S.A.
(86) International Application No :PCT/US2013/028931
Filing Date :04/03/2013
(87) International Publication No :WO 2014/055111
(61) Patent of Addition to Application Number :NA
Filing Date :NA
(62) Divisional to Application Number :NA
Filing Date :NA

(71)**Name of Applicant :**
1)INGURAN, LLC
Address of Applicant :22575 State Highway 6 South, Navasota, Texas 77868 UNITED STATES OF AMERICA.
(72)**Name of Inventor :**
1)GILLIGAN, THOMAS BOYD
2)EVANS, KENNETH MICHAEL
3)LENZ, RICHARD
4)GONZALEZ-MARIN, CLARA
5)VISHWANATH, RAMAKRISHNAN

(57) Abstract :
Methods for processing and sorting sperm are disclosed. Portions of sperm sorting or staining processes may include standardizing sperm samples by adjusting the concentration of the sperm sample to a predetermined concentration and adjusting the pH of the sample to a predetermined value. Sperm may also be stained in a single staining buffer having a DNA selective dye and a quenching dye.

No. of Pages : 29 No. of Claims : 54

(12) PATENT APPLICATION PUBLICATION
(19) INDIA
(22) Date of filing of Application :01/04/2015
(21) Application No.877/KOLNP/2015 A
(43) Publication Date : 25/12/2015

(54) Title of the invention : PRE-PAID VIRTUAL CARD AND METHOD FOR ITS CREATION AND ITS UTILIZATION

(51) International classification :G06Q20/32
(31) Priority Document No :PD2012A000257
(32) Priority Date :06/09/2012
(33) Name of priority country :Italy
(86) International Application No :PCT/IB2013/001903
Filing Date :04/09/2013
(87) International Publication No :WO 2014/037783
(61) Patent of Addition to Application Number :NA
Filing Date :NA
(62) Divisional to Application Number :NA
Filing Date :NA

(71)**Name of Applicant :**
1)2 PAY S.R.L.
Address of Applicant :Via Lombardi, 14/4, I-30020 Marcon ITALY
(72)**Name of Inventor :**
1)OCCARI, DIEGO
2)BERNARDI, DANIELE

(57) Abstract :
A pre-paid virtual card characterised in that its identifier number consists of the telephone subscription number of a smartphone, by means of which the pre-paid virtual card is created at the moment in which an application (APP) developed to create said pre-paid virtual card is downloaded onto said smartphone, to automatically associate with its identifier said telephone subscription number, and to establish at least a first connection with an Electronic Money Institution (EMI), with which at least the E-mail address of the holder of said subscription, a password for subsequent access, and a PIN security code for future payments instructions must be registered.

No. of Pages : 17 No. of Claims : 13

(12) PATENT APPLICATION PUBLICATION
(19) INDIA
(22) Date of filing of Application :01/04/2015
(21) Application No.878/KOLNP/2015 A
(43) Publication Date : 25/12/2015

(54) Title of the invention : METHOD FOR PRODUCING A BRUSH AND BRUSH OBTAINED BY SAID METHOD

(51) International classification :A46B3/00,A46B3/04
(31) Priority Document No :BO2012A000571
(32) Priority Date :19/10/2012
(33) Name of priority country :Italy
(86) International Application No :PCT/IB2013/059410
Filing Date :17/10/2013
(87) International Publication No :WO 2014/060976
(61) Patent of Addition to Application Number :NA
Filing Date :NA
(62) Divisional to Application Number :NA
Filing Date :NA

(71)**Name of Applicant :**
1)EXTRA BRUSHES S.r.l.
Address of Applicant :Via Stelloni 21, I-40010 Sala Bolognese ITALY
(72)**Name of Inventor :**
1)TRASFORINI, DANIELE

(57) Abstract :
Described is an industrial brush (1) comprising a brush body (2) obtained by the solidification of a metal in which the metal wires are locked in a rigid fashion for a first portion (3) thereby having a rigid body. Also described is a process for making a brush (1) comprising the steps of feeding in a mould (8) a metal in the molten state (melting temperature less than 2000°C), in such a way that the first portion of the metal wires (3) is immersed in the metal which, when solidifying, forms a brush body with a rigid structure with a high mechanical strength such as to render perfectly stable the operation of the brush at high speeds and at high temperatures. During solidification of the molten metal there is also a heat treatment on the metal wires which improves their mechanical characteristics.

No. of Pages : 35 No. of Claims : 24

(12) PATENT APPLICATION PUBLICATION
(21) Application No.944/KOLNP/2015 A
(19) INDIA
(22) Date of filing of Application :07/04/2015
(43) Publication Date : 25/12/2015

(54) Title of the invention : COMMUNICATION SYSTEM AND COMPUTER READABLE MEDIUM

(51) International classification :H04N7/15,G06F13/00,H04M3/56
(31) Priority Document No :2012-241325
(32) Priority Date :31/10/2012
(33) Name of priority country :Japan
(86) International Application No :PCT/JP2013/080061
Filing Date :30/10/2013
(87) International Publication No :WO 2014/069671
(61) Patent of Addition to Application Number :NA
Filing Date :NA
(62) Divisional to Application Number :NA
Filing Date :NA

(71)**Name of Applicant :**
1)RICOH COMPANY, LIMITED
Address of Applicant :3-6, Nakamagome 1-chome, Ohta-ku, Tokyo, 1438555 JAPAN
(72)**Name of Inventor :**
1)TAMURA, Hideki

(57) Abstract :
A communication system include: a first acquisition unit configured to acquire request information of session initiation and authentication information of session participation,; a session management unit configured to establish the session between the first terminal and the second terminal; a second acquisition unit configured to acquire request information of session participation and the authentication information of session participation being input by a third terminal; and a participation determination unit configured to compare the authentication information of session participation obtained by the first acquisition unit with the authentication information of session participation obtained by the second acquisition unit, and the participation determination unit allowing the third terminal to participate in the session when the authentication information of session participation obtained by the first acquisition unit is identical to the authentication information of session participation obtained by the second acquisition unit.

No. of Pages : 152 No. of Claims : 12

(12) PATENT APPLICATION PUBLICATION
(19) INDIA
(22) Date of filing of Application :07/04/2015
(21) Application No.945/KOLNP/2015 A
(43) Publication Date : 25/12/2015

(54) Title of the invention : CAMERA ZOOM INDICATOR IN MOBILE DEVICES

(51) International classification :H04N1/00,G06F3/0484,H04N5/232
(31) Priority Document No :61/719,479
(32) Priority Date :28/10/2012
(33) Name of priority country :U.S.A.
(86) International Application No :PCT/US2013/065288
Filing Date :16/10/2013
(87) International Publication No :WO 2014/066115
(61) Patent of Addition to Application Number :NA
Filing Date :NA
(62) Divisional to Application Number :NA
Filing Date :NA

(71)**Name of Applicant :**
1)GOOGLE INC.
Address of Applicant :1600 Amphitheatre Parkway, Mountain View, California 94043 UNITED STATES OF AMERICA.
(72)**Name of Inventor :**
1)MEHTA, NIRAV
2)KOLB, MICHAEL
3)ROBERTSON, CHRISTIAN

(57) Abstract :
A computing device is described that outputs, for display at a display device, a graphical user interface including a graphical zoom indicator associated with a zoom operation of a camera. The graphical zoom indicator includes an inner fixed circle, an outer fixed circle, and an adjustable circle. The computing device receives an indication of an input detected at an input device, and based at least in part on the indication of the input, the computing device determines an adjustment to a zoom level of the zoom operation of the camera. Based at least in part on the adjustment to the zoom level of the zoom operation of the camera, the computing device updates the graphical user interface to modify a size of the adjustable circle based at least in part on the adjustment to the zoom level of the zoom operation of the camera.

No. of Pages : 44 No. of Claims : 15

(12) PATENT APPLICATION PUBLICATION
(19) INDIA
(22) Date of filing of Application :20/03/2015
(21) Application No.777/KOLNP/2015 A
(43) Publication Date : 25/12/2015

(54) Title of the invention : NANOPARTICLE FORMULATION

(51) International classification :A61K9/127
(31) Priority Document No :1215289.8
(32) Priority Date :28/08/2012
(33) Name of priority country :U.K.
(86) International Application No :PCT/GB2013/052258
Filing Date :28/08/2013
(87) International Publication No :WO 2014/033453
(61) Patent of Addition to Application Number :NA
Filing Date :NA
(62) Divisional to Application Number :NA
Filing Date :NA

(71)**Name of Applicant :**
1)MEDICAL RESEARCH COUNCIL
Address of Applicant :2nd Floor David Phillips Building Polaris House North Star Avenue Swindon Wiltshire SN2 1FL U.K.
2)IMPERIAL INNOVATIONS LTD
(72)**Name of Inventor :**
1)BELL, JIMMY
2)THOMAS, ELIZABETH LOUISE
3)BRODY, LEIGH
4)ARISOYLU, MELIZ SAHURI
5)MILLER, ANDREW
6)FROST, GARY

(57) Abstract :
The present invention concerns nanoparticle formulations suitable for the delivery of one or more therapeutic agents the formulations comprising: a cationic cholesterol derivative; a neutral phospholipid; cholesterol or a neutral cholesterol derivative; and a saturated fatty acid PEGylated neutral derivative of phosphatidylethanolamine or phosphatidylcholine.

No. of Pages : 81 No. of Claims : 33

(12) PATENT APPLICATION PUBLICATION
(21) Application No.778/KOLNP/2015 A
(19) INDIA
(22) Date of filing of Application :21/03/2015
(43) Publication Date : 25/12/2015

(54) Title of the invention : METHOD FOR PRODUCING BAINITIC RAIL STEELS TRACK ELEMENT AND INSTALLATION FOR CARRYING OUT THE METHOD

(51) International classification	:C21D9/04,C21D1/20,C22C38/04
(31) Priority Document No	:A 990/2012
(32) Priority Date	:11/09/2012
(33) Name of priority country	:Austria
(86) International Application No	:PCT/AT2013/000107
Filing Date	:27/06/2013
(87) International Publication No	:WO 2014/040093
(61) Patent of Addition to Application Number	:NA
Filing Date	:NA
(62) Divisional to Application Number	:NA
Filing Date	:NA

(71)**Name of Applicant :**
1)VOESTALPINE SCHIENEN GMBH
Address of Applicant :Kerpelystrasse 199 A 8700 Leoben Austria
(72)**Name of Inventor :**
1)VOESTALPINE SCHIENEN GMBH

(57) Abstract :
The invention relates to a track element especially a low alloy steel rail for rail vehicles the steel in the rail head of the track element having a ferrite content of 5 15 vol. % and a multi phase bainite structure which consists of upper and lower bainite constituents.

No. of Pages : 27 No. of Claims : 29

(12) PATENT APPLICATION PUBLICATION
(19) INDIA
(22) Date of filing of Application :30/03/2015
(21) Application No.843/KOLNP/2015 A
(43) Publication Date : 25/12/2015

(54) Title of the invention : VEHICLE SEAT

(51) International classification	:B60N 2/427 B60N 2/68
(31) Priority Document No	:NA
(32) Priority Date	:NA
(33) Name of priority country	:NA
(86) International Application No	:PCT/JP2012/072388
Filing Date	:03/09/2012
(87) International Publication No	:WO 2014/033963
(61) Patent of Addition to Application Number	:NA
Filing Date	:NA
(62) Divisional to Application Number	:NA
Filing Date	:NA

(71)**Name of Applicant :**
1)TS TECH CO., LTD.
Address of Applicant :7-27, SAKAECHO 3-CHOME, ASAKA-SHI, SAITAMA 351-0012 JAPAN
(72)**Name of Inventor :**
1)FUJITA, Satoshi
2)ITOI, Hiroyuki

(57) Abstract :
Provided is a vehicle seat capable of absorbing impact energy by deflecting and deforming when applied with impact energy during a rear-end collision. The present invention pertains to a vehicle seat (S) provided with frame side parts (15a) which are located on the right and left sides of a seat back frame (1) and which extend in the vertical direction. The frame side parts (15a) are each provided with a first fragile part (150A) formed so as to extend from the rear end of the respective frame side part (15a) towards the front, and a second fragile part (150B) formed at a position that is away from the first fragile part (150A) on the respective frame side parts (15a). The first fragile parts (150A) extend towards the formation positions of the second fragile parts (150B).

No. of Pages : 48 No. of Claims : 9

(12) PATENT APPLICATION PUBLICATION
(19) INDIA
(22) Date of filing of Application :30/03/2015
(21) Application No.844/KOLNP/2015 A
(43) Publication Date : 25/12/2015

(54) Title of the invention : NONLINEAR SACCHARIDE CONJUGATES

(51) International classification :A61K47/48,A61K39/095,A61P31/04
(31) Priority Document No :61/709,093
(32) Priority Date :02/10/2012
(33) Name of priority country :U.S.A.
(86) International Application No :PCT/EP2013/070496
Filing Date :02/10/2013
(87) International Publication No :WO 2014/053521
(61) Patent of Addition to Application Number :NA
Filing Date :NA
(62) Divisional to Application Number :NA
Filing Date :NA

(71)**Name of Applicant :**
1)GLAXOSMITHKLINE BIOLOGICALS SA
Address of Applicant :Rue de l'Institut 89 B-1330 Rixensart BELGIUM
(72)**Name of Inventor :**
1)BERTI, FRANCESCO
2)BROGIONI, GIULIA
3)CONSTANTINO, PAOLO
4)DEL GIUDICE, GIUSEPPE
5)ROMANO, MARIA

(57) Abstract :
This specification is directed to nonlinear saccharide conjugates that comprise polysaccharides that are linked to at least two peptides that comprise T-cell epitopes and have no conformational B-cell epitopes where one of the peptides is linked to an internal saccharide so that the conjugates have a branched (i.e., nonlinear) structure. The specification also provides methods of manufacturing these conjugates, methods of formulating these conjugates in compositions for use as vaccines and methods of using the compositions to induce an immune response to the capsular saccharide. The specification also provides a new polyepitope carrier peptidecomprising the PV1 epitope from polio virus. The new polyepitope carrier peptidecan be used in both linear saccharide conjugates as well as the nonlinear saccharide conjugates.

No. of Pages : 122 No. of Claims : 29

(12) PATENT APPLICATION PUBLICATION
(19) INDIA
(22) Date of filing of Application :08/04/2015
(21) Application No.964/KOLNP/2015 A
(43) Publication Date : 25/12/2015

(54) Title of the invention : VANILLIN SYNTHASE

(51) International classification :C12P7/24,C12N9/50,C12N15/80
(31) Priority Document No :61/722,513
(32) Priority Date :05/11/2012
(33) Name of priority country :U.S.A.
(86) International Application No :PCT/DK2013/050357
Filing Date :05/11/2013
(87) International Publication No :WO 2014/067534
(61) Patent of Addition to Application Number :NA
Filing Date :NA
(62) Divisional to Application Number :NA
Filing Date :NA

(71)**Name of Applicant :**
1)EVOLVA SA
Address of Applicant :Dugginerstrasse 23, CH-4153 Reinach SWITZERLAND
2)UNIVERSITY OF COPENHAGEN
(72)**Name of Inventor :**
1)LINDBERG MØLLER, BIRGER
2)HALKJÆR HANSEN, ESBEN
3)HANSEN, JØRGEN
4)JANESHAWARI GALLAGE, NETHAJI

(57) Abstract :
The invention relates to methods for producing vanillin and related compounds. The methods involve use of a vanillin synthase capable of catalyzing side chain cleavage of ferulic acid to form vanillin. The invention also relates to host organisms expressing such vanillin synthases useful in the methods.

No. of Pages : 84 No. of Claims : 42

(12) PATENT APPLICATION PUBLICATION
(19) INDIA
(22) Date of filing of Application :08/04/2015
(21) Application No.965/KOLNP/2015 A
(43) Publication Date : 25/12/2015

(54) Title of the invention : NON-CROSS-LINKED ACELLULAR PERTUSSIS ANTIGENS FOR USE IN COMBINATION VACCINES

(51) International classification :A61K39/00,A61K39/102,A61K39/29
(31) Priority Document No :61/713,356
(32) Priority Date :12/10/2012
(33) Name of priority country :U.S.A.
(86) International Application No :PCT/EP2013/071372
Filing Date :11/10/2013
(87) International Publication No :WO 2014/057132
(61) Patent of Addition to Application Number :NA
Filing Date :NA
(62) Divisional to Application Number :NA
Filing Date :NA

(71)**Name of Applicant :**
1)GLAXOSMITHKLINE BIOLOGICALS SA
Address of Applicant :Rue de L'Institut 89 B-1330 Rixensart BELGIUM
(72)**Name of Inventor :**
1)TARLI, LORENZO
2)CONTORNI, MARIO
3)BARTALESI, ALESSANDRO

(57) Abstract :
The present invention relates to stable compositions comprising acellular pertussis antigens that have not been cross-linked with a cross-linking agent such as formaldehyde or glutaraldehyde and their use as acellular pertussis components in combination vaccines. Processes for preparing these antigens and compositions are also disclosed.

No. of Pages : 49 No. of Claims : 25

(12) PATENT APPLICATION PUBLICATION
(19) INDIA
(22) Date of filing of Application :07/04/2015
(21) Application No.952/KOLNP/2015 A
(43) Publication Date : 25/12/2015

(54) Title of the invention : VEHICLE SEAT

(51) International classification :B60N2/72,A47C7/30,B60N2/68
(31) Priority Document No :NA
(32) Priority Date :NA
(33) Name of priority country :NA
(86) International Application No:PCT/JP2012/074799
Filing Date :26/09/2012
(87) International Publication No :WO 2014/049755
(61) Patent of Addition to Application Number :NA
Filing Date :NA
(62) Divisional to Application Number :NA
Filing Date :NA

(71)**Name of Applicant :**
1)TS TECH CO., LTD.
Address of Applicant :7-27, Sakaecho 3-chome, Asaka-shi, Saitama 3510012 JAPAN
(72)**Name of Inventor :**
1)SUGIYAMA, SHINJI

(57) Abstract :
A vehicle seat that conforms well to a seated occupant and offers improved seating comfort is provided. A seat cushion (3) of the vehicle seat (S) is equipped with right and left side-frames (11), a pan frame (20) that connects the front parts of the side-frames (11) together, and an occupant support member (40) that connects the side-frames (11) together at the rear of the pan frame (20). The front end part of the occupant support member (40), which tilts rearward, is positioned higher than the rear end part of the pan frame (20). A thigh support section (27), which is provided in the middle of the pan frame (20), extends toward the occupant support member (40) side beyond the right and left end parts (21).

No. of Pages : 40 No. of Claims : 8

(12) PATENT APPLICATION PUBLICATION
(19) INDIA
(22) Date of filing of Application :07/04/2015
(21) Application No.953/KOLNP/2015 A
(43) Publication Date : 25/12/2015

(54) Title of the invention : HELICAL COMPRESSION SPRING AND METHOD FOR MANUFACTURING SAME

(51) International classification :C22C38/00,B21F3/02,B21F35/00
(31) Priority Document No :2012-202416
(32) Priority Date :14/09/2012
(33) Name of priority country :Japan
(86) International Application No :PCT/JP2013/073937
Filing Date :05/09/2013
(87) International Publication No :WO 2014/042066
(61) Patent of Addition to Application Number :NA
Filing Date :NA
(62) Divisional to Application Number :NA
Filing Date :NA

(71)**Name of Applicant :**
1)NHK SPRING CO., LTD.
Address of Applicant :10, Fukuura 3-chome, Kanazawa-ku, Yokohama-shi, Kanagawa 2360004 JAPAN
(72)**Name of Inventor :**
1)ONO, YUITIROU
2)SHIRAISHI, TOHRU
3)ONO, YOSHIKI
4)TAKAHASHI, KEITA

(57) Abstract :
Provided are: a highly-durable helical compression spring that is produced using inexpensive wire rod by eliminating tensile residual stress caused by coiling, and forming a carbon concentrated layer on the surface of the wire rod to impart an appropriate compressive residual stress distribution; and a method for manufacturing the helical compression spring. The helical compression spring is characterized by: using steel wire rod containing, in wt%, 0.45 to 0.80% carbon, 0.15 to 2.50% silicon, and 0.3 to 1.0% manganese, with the remainder comprising iron and unavoidable impurities, said steel wire rod having an equivalent circle diameter of 2.5 mm to 10 mm; having an internal hardness of 570 to 700 HV in an arbitrarily-defined cross section of the wire rod; having a carbon concentrated layer in which the carbon exceeds the average concentration of carbon contained in the steel wire rod in the surface layer; and having an unloaded compressive residual stress greater than or equal to 200 MPa on the inner diameter side of the coil spring at a depth of 0.2 mm from the surface of the wire rod in substantially the direction of maximum principal stress when a compressive load is applied to the spring; and an unloaded compressive residual stress greater than or equal to 60 MPa at a depth of 0.4 mm from the surface.

No. of Pages : 57 No. of Claims : 24

(12) PATENT APPLICATION PUBLICATION
(19) INDIA
(22) Date of filing of Application :08/04/2015
(21) Application No.959/KOLNP/2015 A
(43) Publication Date : 25/12/2015

(54) Title of the invention : MOBILE COMMUNICATION METHOD, WIRELESS ACCESS NETWORK DEVICE AND MOBILE STATION

(51) International classification :H04W48/00,H04W48/10,H04W48/16
(31) Priority Document No :2012-223641
(32) Priority Date :05/10/2012
(33) Name of priority country :Japan
(86) International Application No :PCT/JP2013/076969
Filing Date :03/10/2013
(87) International Publication No :WO 2014/054746
(61) Patent of Addition to Application Number :NA
Filing Date :NA
(62) Divisional to Application Number :NA
Filing Date :NA

(71)**Name of Applicant :**
1)NTT DOCOMO, INC.
Address of Applicant :11-1, Nagatacho 2-chome, Chiyoda-ku, Tokyo 1006150 JAPAN
(72)**Name of Inventor :**
1)TAKAHASHI, HIDEAKI
2)SAGAE, YUTA
3)CHIN, HIROSHI

(57) Abstract :
The present invention realizes an appropriate idle mode cell reselection by changing a threshold value that is used when performing idle mode cell reselection in a case where RSRQ measurement is performed for a six resource block and in a case where wideband RSRQ measurement is performed. This mobile communication method has a step in which a wireless base station (eNB) or a wireless link control station (RNC) reports an existing parameter used when performing cell reselection processing on the basis of RSRQ measurement results for a six resource block and a wideband parameter used when performing idle mode cell reselection on the basis of measurement results by wideband RSRQ measurement.

No. of Pages : 60 No. of Claims : 6

(12) PATENT APPLICATION PUBLICATION
(19) INDIA
(22) Date of filing of Application :30/03/2015
(21) Application No.842/KOLNP/2015 A
(43) Publication Date : 25/12/2015

(54) Title of the invention : VEHICLE SEAT, AND SEAT FRAME FOR VEHICLE SEAT

(51) International classification :B60N2/68
(31) Priority Document No :NA
(32) Priority Date :NA
(33) Name of priority country :NA
(86) International Application No :PCT/JP2012/072389
Filing Date :03/09/2012
(87) International Publication No :WO 2014/033964
(61) Patent of Addition to Application Number :NA
Filing Date :NA
(62) Divisional to Application Number :NA
Filing Date :NA

(71)**Name of Applicant :**
1)TS TECH CO., LTD.
Address of Applicant :7-27, Sakaecho 3-chome, Asaka-shi, Saitama 351-0012 JAPAN
(72)**Name of Inventor :**
1)FUJITA, Satoshi
2)ITOI Hiroyuki

(57) Abstract :
Provided is a seat frame for a vehicle seat wherein it is possible to support the back of a seated person during a rear-end collision by using a simple structure and few component parts. The present invention is a seat frame for a vehicle seat (S). The present invention is provided with an upper frame part (11a) on top of the seat, lateral frame parts on the right and left of the seat, and a connection frame (30) connecting the tops of the lateral frame parts in a bridging manner. The connection frame (30) is provided with a bent protrusion part (37), which is bent in the lengthwise direction and which protrudes from a surface formed by means of the connection frame (30), at a position between the pair of lateral frame parts. The bent protrusion part (37) is disposed along the entire length of the connection frame (30) in the vertical direction.

No. of Pages : 31 No. of Claims : 8

(12) PATENT APPLICATION PUBLICATION
(19) INDIA
(22) Date of filing of Application :30/03/2015
(21) Application No.839/KOLNP/2015 A
(43) Publication Date : 25/12/2015

(54) Title of the invention : GETTER PUMP

(51) International classification :H01J7/18,F04B37/02
(31) Priority Document No :MI2012A001732
(32) Priority Date :15/10/2012
(33) Name of priority country :Italy
(86) International Application No :PCT/IB2013/058802
Filing Date :24/09/2013
(87) International Publication No :WO 2014/060879
(61) Patent of Addition to Application Number :NA
Filing Date :NA
(62) Divisional to Application Number :NA
Filing Date :NA

(71)**Name of Applicant :**
1)SAES GETTERS S.P.A.
Address of Applicant :Viale Italia 77, I-20020 Lainate (MI) ITALY
(72)**Name of Inventor :**
1)BONUCCI, ANTONIO
2)VIALE,LUCA

(57) Abstract :
Getter pump comprising a casing (21, 21), whose shape is a solid of revolution with a revolution axis (24), and a plurality of getter cartridges (22, 23) mounted within said getter pump casing (21, 21), each cartridge (22, 23) comprising a linear central support (221, 231) and spaced getter elements mounted on said linear central support (221, 231), a plane containing a linear central support (221, 231) and parallel to the revolution axis (24) being defined a getter cartridge orientation plane, and a plane orthogonal to the revolution axis (24) and intersecting the midpoint of a linear central support (221, 231) being defined a getter cartridge positioning plane (222, 232), the angles (α, α) formed by said positioning planes (222, 232) with the linear central supports (221, 231) being equal to or less than 30°.

No. of Pages : 13 No. of Claims : 14

(12) PATENT APPLICATION PUBLICATION
(21) Application No.975/KOLNP/2015 A
(19) INDIA
(22) Date of filing of Application :09/04/2015
(43) Publication Date : 25/12/2015

(54) Title of the invention : TONER, DEVELOPER, IMAGE FORMING APPARATUS, AND PROCESS CARTRIDGE

(51) International classification :G03G9/087,G03G9/10
(31) Priority Document No :2012-242166
(32) Priority Date :01/11/2012
(33) Name of priority country :Japan
(86) International Application No :PCT/JP2013/078397
Filing Date :11/10/2013
(87) International Publication No :WO 2014/069263
(61) Patent of Addition to Application Number :NA
Filing Date :NA
(62) Divisional to Application Number :NA
Filing Date :NA

(71)**Name of Applicant :**
1)RICOH COMPANY, LTD.
Address of Applicant :3-6, Nakamagome 1-chome, Ohta-ku, Tokyo, 1438555 JAPAN
(72)**Name of Inventor :**
1)NAKAYAMA, Shinya
2)YAMAMOTO Atsushi
3)MASUDA Minoru
4)CHIBA Susumu
5)SAWADA Toyoshi
6)YAMASHITA Hiroshi

(57) Abstract :
Provided is a toner containing a binder resin. The binder resin contains a crystalline resin. The toner has a maximum endothermic peak temperature (P1) of from 50°C to 80°C and a total endothermic amount (Q) of from 35 J/g to 90 J/g at a first temperature elevation of differential scanning calorimetry. A ratio (Qp/Q) of a total endothermic amount (Qp) of the toner in a temperature range of from 20°C to the maximum endothermic peak temperature (P1) to the total endothermic amount (Q) of the toner is from 0.65 to 0.83.

No. of Pages : 156 No. of Claims : 17

(12) PATENT APPLICATION PUBLICATION
(21) Application No.789/KOLNP/2015 A
(19) INDIA
(22) Date of filing of Application :23/03/2015
(43) Publication Date : 25/12/2015

(54) Title of the invention : METHOD AND DEVICE FOR INFORMING WIRELESS ACCESS POINT SERVICE VIRTUAL PROVIDER

(51) International classification :H04W48/08,H04W48/20
(31) Priority Document No :201210338359.0
(32) Priority Date :13/09/2012
(33) Name of priority country :China
(86) International Application No :PCT/CN2013/077041
Filing Date :09/06/2013
(87) International Publication No :WO 2014/040431
(61) Patent of Addition to Application Number :NA
Filing Date :NA
(62) Divisional to Application Number :NA
Filing Date :NA

(71)**Name of Applicant :**
1)HUAWEI TECHNOLOGIES CO. LTD.
Address of Applicant :Huawei Administration Building Bantian Longgang Shenzhen Guangdong 518129 China
(72)**Name of Inventor :**
1)HUAWEI TECHNOLOGIES CO. LTD.

(57) Abstract :
In this embodiment an AP is informed through a UE of the information about a UE home carrier the AP judges whether the UE home carrier adopts a virtual hotspot technique on the AP if the virtual hotspot technique is adopted on the AP then the information about the UE home carrier is sent to the UE as the information about the AP access service carrier so that the UE regards the AP access service carrier as the UE home carrier in the case that the UE home carrier and the AP access service carrier are different thereby preferably selecting the network of the home carrier to access a communication network through the AP.

No. of Pages : 36 No. of Claims : 22

(12) PATENT APPLICATION PUBLICATION
(19) INDIA
(22) Date of filing of Application :30/03/2015
(21) Application No.845/KOLNP/2015 A
(43) Publication Date : 25/12/2015

(54) Title of the invention : LASER PULSE FOCUSING

(51) International classification :H01S3/00,G01J11/00,A61F9/008
(31) Priority Document No :NA
(32) Priority Date :NA
(33) Name of priority country :NA
(86) International Application No :PCT/EP2012/072567
Filing Date :14/11/2012
(87) International Publication No :WO 2014/075713
(61) Patent of Addition to Application Number :NA
Filing Date :NA
(62) Divisional to Application Number :NA
Filing Date :NA

(71)**Name of Applicant :**
1)WAVELIGHT GMBH
Address of Applicant :Am Wolfsmantel 5, 91058 Erlangen GERMANY
(72)**Name of Inventor :**
1)VOGLER, KLAUS
2)KITTELMANN, OLAF
3)FOESEL, MATTHIAS
4)DONITZKY, CHRISTOF

(57) Abstract :
In certain embodiments, a system (10) comprises a laser source (20), one or more optical elements (24), a monitoring device (28), and a control computer (30). The laser source (20) emits one or more laser pulses. The optical elements (24) change a pulse length of the laser pulses, and the monitoring device (28) measures the pulse length of the laser pulses to detect the change in the pulse length. The control computer (30) receives the measured pulse length from the monitoring device (28), determines one or more laser parameters that compensate for the change in the pulse length, and controls the laser source (20) according to the laser parameters.

No. of Pages : 18 No. of Claims : 16

(12) PATENT APPLICATION PUBLICATION
(21) Application No.962/KOLNP/2015 A
(19) INDIA
(22) Date of filing of Application :08/04/2015
(43) Publication Date : 25/12/2015

(54) Title of the invention : METHOD AND COMPOSITION FOR SEQUESTRATION OF ARSENIC

(51) International classification :C03C3/087,C01G28/00
(31) Priority Document No :61/714,424
(32) Priority Date :16/10/2012
(33) Name of priority country :U.S.A.
(86) International Application No :PCT/CA2013/050664
Filing Date :27/08/2013
(87) International Publication No :WO 2014/059535
(61) Patent of Addition to Application Number :NA
Filing Date :NA
(62) Divisional to Application Number :NA
Filing Date :NA

(71)**Name of Applicant :**
1)DUNDEE SUSTAINABLE TECHNOLOGIES INC.
Address of Applicant :600 Boul. de Maisonneuve, Ouest, Bur. 2750, Montréal, Québec H3A 3J2 CANADA
(72)**Name of Inventor :**
1)LALANCETTE, JEAN-MARC
2)DUBREUIL, BERTRAND
3)LEMIEUX, DAVID

(57) Abstract :
A method for sequestrating arsenic oxides, comprising forming an insoluble and stable glass incorporating a fully oxidized form of arsenic generated by oxidation of an initial lower oxide of arsenic and stabilization by calcium salt formation. The glass composition for sequestration of arsenic comprises from 50 to 75% silica; from 0.5 to 3% Al203; from 1 to 15% MnO; from 5 to 15 % CaO; from 1 to 20% As205 and from 8 to 14% Na2O, less than four percent of iron oxides, magnesium oxide and other oxides.

No. of Pages : 11 No. of Claims : 9

(12) PATENT APPLICATION PUBLICATION
(19) INDIA
(22) Date of filing of Application :08/04/2015
(21) Application No.963/KOLNP/2015 A
(43) Publication Date : 25/12/2015

(54) Title of the invention : LOAD HANDLING BY LOAD HANDLING DEVICE

(51) International classification :B66C13/46,G01S17/08
(31) Priority Document No :20126027
(32) Priority Date :02/10/2012
(33) Name of priority country :Finland
(86) International Application No :PCT/FI2013/050955
Filing Date :02/10/2013
(87) International Publication No :WO 2014/053703
(61) Patent of Addition to Application Number :NA
Filing Date :NA
(62) Divisional to Application Number :NA
Filing Date :NA

(71)**Name of Applicant :**
1)KONECRANES PLC
Address of Applicant :Koneenkatu 8, FI-05830 Hyvinkää FINLAND
(72)**Name of Inventor :**
1)RINTANEN, KARI

(57) Abstract :
A load is handled by a load handling device comprising gripping means for gripping at least one fastening point of the load, comprising determining, in the gripping means, a distance map within the area of which are described a part of the area of the load to which the gripping means attach and/or on which another load is stacked, as well as surroundings of the load.

No. of Pages : 44 No. of Claims : 28

(12) PATENT APPLICATION PUBLICATION
(19) INDIA
(22) Date of filing of Application :24/03/2015
(21) Application No.796/KOLNP/2015 A
(43) Publication Date : 25/12/2015

(54) Title of the invention : GASKET AND ASSEMBLY

(51) International classification :F28D9/00,F28F3/08,F28F3/10
(31) Priority Document No :12190493.2
(32) Priority Date :30/10/2012
(33) Name of priority country :EPO
(86) International Application No :PCT/EP2013/060875
Filing Date :27/05/2013
(87) International Publication No :WO 2014/067674
(61) Patent of Addition to Application Number :NA
Filing Date :NA
(62) Divisional to Application Number :NA
Filing Date :NA

(71)**Name of Applicant :**
1)ALFA LAVAL CORPORATE AB
Address of Applicant :P. O. Box 73 SE 221 00 Lund Sweden
(72)**Name of Inventor :**
1)ALFA LAVAL CORPORATE AB

(57) Abstract :
A gasket (1 1) and an assembly comprising a heat exchanger plate (8) and such a gasket is provided. The gasket comprises an annular gasket portion (52) arranged to enclose a port hole (24) of the heat exchanger plate. An inner edge (56) of the annular gasket portion defines an area (58) including a reference point (80) coinciding with a center point (C) of a biggest imaginary circle (82) that can be fitted within the area. The gasket is characterized in that the area has a form defined by a number of corner points of an imaginary plane geometric figure (72) of which at least one is displaced from an arc (92) of the circle and the same number of thoroughly curved lines (74 76 78) connecting the corner points wherein a first corner point (66) of the corner points is arranged on a first distance (d1) from the reference point a second one (68) of the corner points is arranged closest to the first corner point in a clockwise direction and on a second distance (d2) from the reference point and a third one (70) of the corner points is arranged closest to the first corner point in a counter clockwise direction and on a third distance (d3) from the reference point.

No. of Pages : 19 No. of Claims : 9

(12) PATENT APPLICATION PUBLICATION
(21) Application No.797/KOLNP/2015 A
(19) INDIA
(22) Date of filing of Application :24/03/2015
(43) Publication Date : 25/12/2015

(54) Title of the invention : ALLOCATING ORTHOGONAL FREQUENCY DIVISION MULTIPLE ACCESS (OFDMA) RESOURCES IN DATA OVER CABLE SERVICES INTERFACE SPECIFICATIONS (DOCSIS) NETWORKS

(51) International classification :H04L5/00
(31) Priority Document No :61/814714
(32) Priority Date :22/04/2013
(33) Name of priority country :U.S.A.
(86) International Application No :PCT/US2014/034985
Filing Date :22/04/2014
(87) International Publication No :WO 2014/176255
(61) Patent of Addition to Application Number :NA
Filing Date :NA
(62) Divisional to Application Number :NA
Filing Date :NA

(71)**Name of Applicant :**
1)HUAWEI TECHNOLOGIES CO. LTD.
Address of Applicant :Huawei Administration Building Bantian Longgang District Shenzhen Guangdong 518129 China
(72)**Name of Inventor :**
1)HUAWEI TECHNOLOGIES CO. LTD.

(57) Abstract :
A Cable Modem Termination System (CMTS) comprising a receiver configured to receive a plurality of upstream transmission request messages from a plurality of coaxial units via an electro optical network wherein the upstream transmission request messages each request permission to transmit a specified amount of data a processor coupled to the receiver and configured to allocate Orthogonal Frequency Division Multiplexing (OFDM) minislots to each coaxial unit based on the amount of data requested in the associated upstream transmission request message and a transmitter coupled to the processor and configured to transmit at least one Uplink Allocation Map (UL MAP) message to indicate minislot allocations to the coaxial units.

No. of Pages : 28 No. of Claims : 20

(12) PATENT APPLICATION PUBLICATION
(21) Application No.979/KOLNP/2015 A
(19) INDIA
(22) Date of filing of Application :09/04/2015
(43) Publication Date : 25/12/2015

(54) Title of the invention : AN IMPROVED METHOD FOR BENDING CERAMIC TILES

(51) International classification :B28B11/00,C04B35/653
(31) Priority Document No :NA
(32) Priority Date :NA
(33) Name of priority country :NA
(86) International Application No :PCT/IT2012/000325
Filing Date :24/10/2012
(87) International Publication No :WO 2014/064720
(61) Patent of Addition to Application Number :NA
Filing Date :NA
(62) Divisional to Application Number :NA
Filing Date :NA

(71)**Name of Applicant :**
1)BREVETTI 2000 S.R.L.
Address of Applicant :Viale Marconi 24, I-40026 Imola (Bologna) ITALY
(72)**Name of Inventor :**
1)CONTI, PIER PAOLA

(57) Abstract :
The invention relates to an improved method for bending ceramic tiles. The method comprises the stages of making grooves in the lower surface of the tile in the area of the tile to be bent, filling the grooves obtained on the tile with a filling material compatible with the material of which the tile is made, covering the grooves with a flexible strip of incombustible refractory- material, anchoring the strip to the surface of the tile, heating the area of the tile to be bent up to the softening temperature of the area itself and cooling the modelled tile thus obtained.

No. of Pages : 7 No. of Claims : 4

(12) PATENT APPLICATION PUBLICATION
(21) Application No.976/KOLNP/2015 A
(19) INDIA
(22) Date of filing of Application :09/04/2015
(43) Publication Date : 25/12/2015

(54) Title of the invention : PACKAGING BAG

(51) International classification :B65D75/58,B65D33/24
(31) Priority Document No :2012-232368
(32) Priority Date :19/10/2012
(33) Name of priority country :Japan
(86) International Application No :PCT/JP2013/078748
Filing Date :17/10/2013
(87) International Publication No :WO 2014/061822
(61) Patent of Addition to Application Number :NA
Filing Date :NA
(62) Divisional to Application Number :NA
Filing Date :NA

(71)**Name of Applicant :**
1)TOPPAN PRINTING CO., LTD.
Address of Applicant :5-1, Taito 1-chome, Taito-ku, Tokyo 1108560 JAPAN
(72)**Name of Inventor :**
1)OTSUKA, HIROYUKI
2)SAITO, AKIHIRO

(57) Abstract :
The purpose of the present invention is to provide a packaging bag having a content-pouring spout that protrudes upward. With the packaging bag, residue such as liquid or powder at the spout opening does not contaminate fingertips because the bag is configured so that the folded state of the content-pouring spout can be maintained without inserting the content-pouring spout, the tip of which has been cut open, into a slit formed by cutting into the packaging bag itself. For this packaging bag, the content-pouring spout (10) is provided so as to be closeable by folding the bag at an intended folding section (14), which extends across the content-pouring spout (10) and a thin sealing sheet (13) in the bag width direction. The thin sealing sheet (13) is provided with a fold-maintaining means (16) for keeping the bag folded at the intended folding section (14).

No. of Pages : 67 No. of Claims : 9

(12) PATENT APPLICATION PUBLICATION
(19) INDIA
(22) Date of filing of Application :09/04/2015
(21) Application No.977/KOLNP/2015 A
(43) Publication Date : 25/12/2015

(54) Title of the invention : AUTO-INJECTOR

(51) International classification :A61M5/20
(31) Priority Document No :12189092.5
(32) Priority Date :18/10/2012
(33) Name of priority country :EPO
(86) International Application No :PCT/EP2013/070584
Filing Date :02/10/2013
(87) International Publication No :WO 2014/060216
(61) Patent of Addition to Application Number :NA
Filing Date :NA
(62) Divisional to Application Number :NA
Filing Date :NA

(71)**Name of Applicant :**
1)SANOFI-AVENTIS DEUTSCHLAND GMBH
Address of Applicant :Brüningstraße 50, 65929 Frankfurt am Main GERMANY
(72)**Name of Inventor :**
1)HENDERSON, CHARLEY
2)CROSS, DAVID
3)JENNINGS, DOUGLAS, IVAN
4)MCGINLEY, RYAN, ANTHONY

(57) Abstract :
Described is an auto-injector (1) for administering a medicament comprising a case (4,5) arranged to receive a packaged syringe (3) comprising an injection needle (11), wherein the case (4,5) comprises a front case (4) rotatably coupled to a rear case (5), and a drive spring (15) arranged to advance a plunger (16) relative to the packaged syringe (3), and a reset mechanism for the drive spring (15) arranged to retract the plunger (16) and compress the drive spring (15) when the front case (4) is rotated relative to the rear case (5).

No. of Pages : 36 No. of Claims : 15

(12) PATENT APPLICATION PUBLICATION
(19) INDIA
(22) Date of filing of Application :09/04/2015
(21) Application No.978/KOLNP/2015 A
(43) Publication Date : 25/12/2015

(54) Title of the invention : MEDICAMENT DELIVERY DEVICE WITH USE INDICATOR

(51) International classification :A61M5/50,A61M5/32
(31) Priority Document No :12188585.9
(32) Priority Date :15/10/2012
(33) Name of priority country :EPO
(86) International Application No :PCT/EP2013/070582
Filing Date :02/10/2013
(87) International Publication No :WO 2014/060214
(61) Patent of Addition to Application Number :NA
Filing Date :NA
(62) Divisional to Application Number :NA
Filing Date :NA

(71)**Name of Applicant :**
1)SANOFI-AVENTIS DEUTSCHLAND GMBH
Address of Applicant :Brüningstrßae 50 65929 Frankfurt am Main GERMANY
(72)**Name of Inventor :**
1)RIEDEL STEPHAN
2)RAAB, STEFFEN
3)HEMMANN, KERSTINE
4)CASPERS, MICHAEL
5)HÖRHOLD KATJA
6)KERKOW, DANIEL

(57) Abstract :
Described is a medicament delivery device (100, 200) comprising a case (105, 205) adapted to hold a container with a medicament and having a needle (300), a needle sleeve (120, 220) telescopically coupled to the case (105, 205) and having a first extended position relative to the case (105, 205) in which the needle (300) is covered, a retracted position relative to the case (105, 205) in which the needle (300) is exposed, and a second extended position relative to the case (105, 205) in which the needle is covered, a first indicia (125, 225) disposed on the needle sleeve (120, 220) which is visible in the first extended position and the second extended position, and a second indicia (130, 230) disposed on the needle sleeve (120, 220) and not visible in the first extended position and visible the second extended position.

No. of Pages : 26 No. of Claims : 14

(12) PATENT APPLICATION PUBLICATION
(19) INDIA
(22) Date of filing of Application :31/03/2015
(21) Application No.851/KOLNP/2015 A
(43) Publication Date : 25/12/2015

(54) Title of the invention : SEAT FRAME FOR VEHICLE SEAT

(51) International classification :B60N2/68,A47C1/024,B60N2/22
(31) Priority Document No :NA
(32) Priority Date :NA
(33) Name of priority country :NA
(86) International Application No :PCT/JP2012/072387
Filing Date :03/09/2012
(87) International Publication No :WO 2014/033962
(61) Patent of Addition to Application Number :NA
Filing Date :NA
(62) Divisional to Application Number :NA
Filing Date :NA

(71)**Name of Applicant :**
1)TS TECH CO., LTD.
Address of Applicant :7-27, Sakaecho 3-chome, Asaka-shi, Saitama 3510012 JAPAN
(72)**Name of Inventor :**
1)HOSHI, Masayuki

(57) Abstract :
A seat frame for a vehicle seat is configured so that a bracket for mounting an actuator thereon is easily joined to a side frame while the interference between the bracket and a shaft for driving a reclining mechanism is prevented. A vehicle seat (S) comprises: side frames (11) which are provided at both ends of a seat back frame (F1) in the widthwise direction; a reclining mechanism (10) which is operated by the rotation of a through-shaft (3b); and an actuator (50) which is driven in order to rotate the through-shaft (3b). The reclining mechanism (10) is mounted to the side wall (12) of a side frame (11). The actuator (50) is mounted to a mounting bracket joined to the inner surface of the side wall (12) in the widthwise direction at a portion to which the reclining mechanism (10) is mounted. The rear end of the upper section (36) of the mounting bracket, the upper section (36) being disposed above the portion of the side wall (12) to which the reclining mechanism (10) is mounted, and the rear end of the lower section (37) of the mounting bracket, the lower section (37) being located below the portion of the side wall (12) to which the reclining mechanism (10) is mounted, are connected together, and the front ends of the upper and lower sections are separated from each other.

No. of Pages : 71 No. of Claims : 9

(12) PATENT APPLICATION PUBLICATION
(19) INDIA
(22) Date of filing of Application :31/03/2015
(21) Application No.855/KOLNP/2015 A
(43) Publication Date : 25/12/2015

(54) Title of the invention : CRYSTALLINE COMPOUNDS

(51) International classification :C07D241/44,A61K31/498,A61P35/00
(31) Priority Document No :61/700,618
(32) Priority Date :13/09/2012
(33) Name of priority country :U.S.A.
(86) International Application No :PCT/EP2013/069068
Filing Date :13/09/2013
(87) International Publication No :WO 2014/041144
(61) Patent of Addition to Application Number :NA
Filing Date :NA
(62) Divisional to Application Number :NA
Filing Date :NA

(71)**Name of Applicant :**
1)SANOFI
Address of Applicant :54 rue La Boétie, F-75008 Paris FRANCE
(72)**Name of Inventor :**
1)BAILLON, BRUNO
2)BAULIER, VIRGINIE
3)COMTE, MYRIAM
4)FUGIER, MATTHIEU
5)KOZLOVIC, STÉPHANE
6)PERRIN, MARC-ANTOINE

(57) Abstract :
Provided herein are polymorph E, a mixed DMAC/toluene solvate and a DMSO solvate of N-(3-{[(2Z)-3-[(2-chloro-5-methoxyphenyl)amino]quinoxalin-2(1H)-ylidene]sulfamoyl}phenyl)-2- methylalaninamide.

No. of Pages : 83 No. of Claims : 41

(12) PATENT APPLICATION PUBLICATION
(19) INDIA
(22) Date of filing of Application :31/03/2015
(21) Application No.856/KOLNP/2015 A
(43) Publication Date : 25/12/2015

(54) Title of the invention : MACROLIDE DERIVATIVES, PREPARATION THEREOF AND THERAPEUTIC USE THEREOF

(51) International classification :C07H15/26,A61K31/7048,A61K31/7052
(31) Priority Document No :1258744
(32) Priority Date :18/09/2012
(33) Name of priority country :France
(86) International Application No :PCT/EP2013/069185
Filing Date :16/09/2013
(87) International Publication No :WO 2014/044645
(61) Patent of Addition to Application Number :NA
Filing Date :NA
(62) Divisional to Application Number :NA
Filing Date :NA

(71)**Name of Applicant :**
1)SANOFI
Address of Applicant :54 rue La Boétie, F-75008 Paris FRANCE
(72)**Name of Inventor :**
1)BAURIN, NICOLAS
2)BENEDETTI, YANNICK
3)BOULEY, EMMANUEL
4)ZHANG, JIDONG

(57) Abstract :
The patent application relates to compounds of formula (I) below: formula (I) to a process for preparing them and to the therapeutic use thereof.

No. of Pages : 146 No. of Claims : 17

(12) PATENT APPLICATION PUBLICATION
(21) Application No.920/KOLNP/2015 A
(19) INDIA
(22) Date of filing of Application :06/04/2015
(43) Publication Date : 25/12/2015

(54) Title of the invention : HEAT-PUMP-TYPE AIR-CONDITIONING DEVICE

(51) International classification :B60H1/22
(31) Priority Document No :2012-201479
(32) Priority Date :13/09/2012
(33) Name of priority country :Japan
(86) International Application No :PCT/JP2013/072035
Filing Date :16/08/2013
(87) International Publication No :WO 2014/041960
(61) Patent of Addition to Application Number :NA
Filing Date :NA
(62) Divisional to Application Number :NA
Filing Date :NA

(71)**Name of Applicant :**
1)NISSAN MOTOR CO., LTD.
Address of Applicant :2, Takara-cho, Kanagawa-ku, Yokohama-shi, Kanagawa 221-0023, JAPAN
(72)**Name of Inventor :**
1)SHINICHI MATANO
2)MASAHIRO ONISHI
3)KENJI IINO

(57) Abstract :
The purpose of the invention is to prevent backflow of the coolant from a pulsation suppression means to an electric compressor when the compressor is stopped, while setting the pulsation suppression means at a position above the electric compressor. A heat-pump-type air-conditioning device, provided with coolant discharge pipes (31, 32) linking an electric compressor (10) disposed in the motor room (M) of an electric automobile (1) and a condenser (25) disposed in the vehicle compartment (R) to each other, the coolant discharge pipes (31, 32) channeling the coolant from the electric compressor (10) to the condenser (25). In the heat-pump-type air-conditioning device, a muffler (11) for suppressing the pulsation of the coolant discharged from the electric compressor (10) is provided at a position partway along the coolant discharge pipes (31, 32), and the muffler (11) is disposed at a position further above, with respect to the vehicle, the coolant discharge port (10b) of the electric compressor (10). The coolant inlet (11a) of the muffler (11) is set at a position further above, with respect to the vehicle, the coolant outlet (11b) of the muffler (11).

No. of Pages : 31 No. of Claims : 5

(12) PATENT APPLICATION PUBLICATION
(19) INDIA
(22) Date of filing of Application :06/04/2015
(21) Application No.921/KOLNP/2015 A
(43) Publication Date : 25/12/2015

(54) Title of the invention : MIXER DRUM DRIVING APPARATUS

(51) International classification :B60P3/16,B28C5/42,F15B11/00
(31) Priority Document No :2012-199329
(32) Priority Date :11/09/2012
(33) Name of priority country :Japan
(86) International Application No :PCT/JP2013/074512
Filing Date :11/09/2013
(87) International Publication No :WO 2014/042182
(61) Patent of Addition to Application Number :NA
Filing Date :NA
(62) Divisional to Application Number :NA
Filing Date :NA

(71)**Name of Applicant :**
1)KAYABA INDUSTRY CO., LTD.
Address of Applicant :World Trade Center Bldg., 4-1, Hamamatsu-cho, 2-chome, Minato-ku, Tokyo 1056111 JAPAN
(72)**Name of Inventor :**
1)YOSHIMITSU TAKAHASHI

(57) Abstract :
This mixing drum drive apparatus is provided with: a hydraulic motor that rotatably drives a mixing drum; a hydraulic pump that is driven by the engine of a mixing truck, and supplies hydraulic fluid to the hydraulic motor; an auxiliary hydraulic pump that is driven by an electric motor, and supplies hydraulic fluid to the hydraulic motor; a pressure detector that detects the pressure of hydraulic fluid discharged from the auxiliary hydraulic pump; and a control valve that controls whether or not hydraulic fluid from the auxiliary hydraulic pump is supplied to the hydraulic motor. A controller opens the control valve if the pressure detected by the pressure detector is greater than or equal to a preset pressure when the control vale is closed and the mixing drum is being rotatably driven by the hydraulic motor driven by the hydraulic pump.

No. of Pages : 27 No. of Claims : 3

(12) PATENT APPLICATION PUBLICATION
(19) INDIA
(22) Date of filing of Application :27/03/2015
(21) Application No.818/KOLNP/2015 A
(43) Publication Date : 25/12/2015

(54) Title of the invention : MULTIPLE VACCINATION INCLUDING SEROGROUP C MENINGOCOCCUS

(51) International classification :A61K 39/09
(31) Priority Document No :60/713801
(32) Priority Date :01/09/2005
(33) Name of priority country :U.S.A.
(86) International Application No :PCT/IB2006/002861
Filing Date :01/09/2006
(87) International Publication No :WO/2007/026249
(61) Patent of Addition to Application Number :NA
Filing Date :NA
(62) Divisional to Application Number :932/KOLNP/2008
Filed on :03/03/2008

(71)**Name of Applicant :**
1)NOVARTIS VACCINES AND DIAGNOSTICS GMBH & CO KG
Address of Applicant :EMIL-VON-BEHRING-STRASSE 76 35041, MARBURG, GERMANY
(72)**Name of Inventor :**
1)BORKOWSKI, ASTRID

(57) Abstract :
Various improvements to vaccines that include a serogroup C meningococcal conjugate antigen, including: (a) co-administration with acellular B.pertussis antigen; (b) co-administration with an inactivated poliovirus antigen; (c) supply in a kit together with a separate pneumococcal conjugate component, which may be in a liquid form; and (d) use in combination with a pneumococcal conjugate antigen but without an aluminium phosphate adjuvant. A kit may have: (a) a first immunogenic component that comprises an aqueous formulation of a conjugated capsular saccharide from Streptococcus pneumoniae; and (b) a second immunogenic component that comprises a conjugated capsular saccharide from Neisseria meningitidis serogroup C.

No. of Pages : 39 No. of Claims : 5

(12) PATENT APPLICATION PUBLICATION
(19) INDIA
(22) Date of filing of Application :01/04/2015
(21) Application No.872/KOLNP/2015 A
(43) Publication Date : 25/12/2015

(54) Title of the invention : MEDICAMENT DELIVERY DEVICE

(51) International classification :A61M5/20,A61M5/32,A61M5/28
(31) Priority Document No :1251113-5
(32) Priority Date :03/10/2012
(33) Name of priority country :Sweden
(86) International Application No :PCT/EP2013/069995
Filing Date :25/09/2013
(87) International Publication No :WO 2014/053378
(61) Patent of Addition to Application Number :NA
Filing Date :NA
(62) Divisional to Application Number :NA
Filing Date :NA

(71)**Name of Applicant :**
1)CAREBAY EUROPE LTD
Address of Applicant :Suite 3, Tower Business Centre, Tower Street, Swatar, BKR 4013 MALTA
(72)**Name of Inventor :**
1)OLSON, STEPHAN

(57) Abstract :
An injection device having a distal and a proximal end comprising; a housing (1); a needle protecting sleeve (2) longitudinally movable relative to the housing (1); a container holder (20) longitudinally movable relative to the housing (1) towards the proximal end of the device from a non-delivery position into a delivery position; a needle protecting sleeve spring (5) operably coupled between the needle protecting sleeve (2) and the container holder (20) such that the needle protecting sleeve (2) can be longitudinally moved towards the distal end of the device from an initial position into an activating position and towards the proximal end of the device from the activating position into an end position. The invention is characterized in that the needle protecting sleeve spring(5) is strained by a first amount when the a needle protecting sleeve (2) moves from its initial position to the activating position, and by a second amount when the container holder (20) moves from its non-delivery position to the delivery position.

No. of Pages : 26 No. of Claims : 9

(12) PATENT APPLICATION PUBLICATION
(19) INDIA
(22) Date of filing of Application :06/04/2015
(21) Application No.926/KOLNP/2015 A
(43) Publication Date : 25/12/2015

(54) Title of the invention : VIRTUAL LIMIT SWITCH

(51) International classification :G05D7/00
(31) Priority Document No :13/606,499
(32) Priority Date :07/09/2012
(33) Name of priority country :U.S.A.
(86) International Application No :PCT/US2013/058553
Filing Date :06/09/2013
(87) International Publication No :WO 2014/039852
(61) Patent of Addition to Application Number :NA
Filing Date :NA
(62) Divisional to Application Number :NA
Filing Date :NA

(71)**Name of Applicant :**
1)PENTAIR FLOW SERVICES AG
Address of Applicant :Freier Platz 10, 8200 Schaffhausen SWITZERLAND
(72)**Name of Inventor :**
1)MINERVINI, LEO

(57) Abstract :
A method associated with a valve package having a process valve, an actuator and a controller. The method includes obtaining a baseline signature corresponding to opening or closing the valve as the valve moves from a first position to a second position. The method also includes obtaining an operating signature corresponding to values associated with the baseline signature each time the valve moves from the first position to the second position. In addition, the operating signature is compared to the baseline signature. The method further includes determining if one or more of the values associated with the operating signature is within an acceptable range from the corresponding one or more values in the baseline signature.

No. of Pages : 18 No. of Claims : 18

(12) PATENT APPLICATION PUBLICATION
(21) Application No.826/KOLNP/2015 A
(19) INDIA
(22) Date of filing of Application :30/03/2015
(43) Publication Date : 25/12/2015

(54) Title of the invention : PARTICLE MANUFACTURING METHOD, PARTICLES, AND PARTICLE MANUFACTURING APPARATUS

(51) International classification :C08J3/12,C08G63/08,C08G63/90
(31) Priority Document No :2012-225116
(32) Priority Date :10/10/2012
(33) Name of priority country :Japan
(86) International Application No :PCT/JP2013/077007
Filing Date :27/09/2013
(87) International Publication No :WO 2014/057869
(61) Patent of Addition to Application Number :NA
Filing Date :NA
(62) Divisional to Application Number :NA
Filing Date :NA

(71)**Name of Applicant :**
1)RICOH COMPANY, LTD.
Address of Applicant :3-6, Nakamagome 1-Chome, Ohta-ku, Tokyo, 1438555 Japan
(72)**Name of Inventor :**
1)OSAKA, Keiko
2)TANAKA Chiaki
3)NEMOTO Taichi

(57) Abstract :
A particle manufacturing method of the present invention includes: ring-opening-polymerizing a ring-opening-polymerizable monomer after bringing the ring-opening-polymerizable monomer into contact with a first compressible fluid; and granulating a polymer obtained in the ring-opening-polymerizing by jetting the polymer and the first compressible fluid.

No. of Pages : 75 No. of Claims : 8

(12) PATENT APPLICATION PUBLICATION
(21) Application No.879/KOLNP/2015 A
(19) INDIA
(22) Date of filing of Application :01/04/2015
(43) Publication Date : 25/12/2015

(54) Title of the invention : LIFTER WITH ELECTROPERMANENT MAGNETS

(51) International classification :B66C1/06
(31) Priority Document No :MI2012A002047
(32) Priority Date :30/11/2012
(33) Name of priority country :Italy
(86) International Application No :PCT/IB2013/060131
Filing Date :14/11/2013
(87) International Publication No :WO 2014/083469
(61) Patent of Addition to Application Number :NA
Filing Date :NA
(62) Divisional to Application Number :NA
Filing Date :NA

(71)**Name of Applicant :**
1)SGM GANTRY S.P.A.
Address of Applicant :Via Leno 2/D, I-25025 Manerbio BS ITALY
(72)**Name of Inventor :**
1)MOLTENI, DANILO

(57) Abstract :
A lifter with electro-permanent magnets comprises an external bearing structure (2, 3) closed at the bottom by a plate,provided with a heat shield (9), from which the circuit poles (1) protrude with their pole pieces (5), each of the electro-permanent magnets being composed of a reversible magnet (6) arranged on top of one of said poles (1), of a fixed polarization magnet (7) formed by a plurality of blocks placed along the lateral faces of the pole (1) and of a coil (8) arranged around the reversible magnet (6) to cause the reversal of the polarization of the latter by means of an electrical pulse, the fixed polarization magnet (7) being made of an alloy of samarium-cobalt that has a Curie point of about 770°C and a residual coercive field able to resist the pulse of polarization reversal of the reversible magnet (6) even when the lifter operates on materials at 600- 650°C.

No. of Pages : 13 No. of Claims : 9

(12) PATENT APPLICATION PUBLICATION
(19) INDIA
(22) Date of filing of Application :01/04/2015
(21) Application No.880/KOLNP/2015 A
(43) Publication Date : 25/12/2015

(54) Title of the invention : METHOD AND DEVICE FOR PROCESSING VALUE DOCUMENTS

(51) International classification :G07D11/00
(31) Priority Document No :10 2012 022 922.4
(32) Priority Date :23/11/2012
(33) Name of priority country :Germany
(86) International Application No :PCT/EP2013/003539
Filing Date :22/11/2013
(87) International Publication No :WO 2014/079582
(61) Patent of Addition to Application Number :NA
Filing Date :NA
(62) Divisional to Application Number :NA
Filing Date :NA

(71)**Name of Applicant :**
1)GIESECKE & DEVRIENT GMBH
Address of Applicant :Prinzregentenstraße 159, 81677 M¼nchen GERMANY
(72)**Name of Inventor :**
1)LINCK, RALF
2)WERNER, FRANK

(57) Abstract :
The invention relates to an automated guided vehicle, which is used to transport stacks of loose value documents to one or a plurality of value document processing devices, to which the automated guided vehicle drives up to deliver the value document stacks. The automated guided vehicle is provided with one or several value document receptacles arranged on the automated guided vehicle and configured for receiving one or several stacks of loose value documents. The automated guided vehicle is further provided with a gripper for removing the value documents from the receptacle, and for putting the stack into an input compartment of the respective value document processing device.

No. of Pages : 30 No. of Claims : 15

(12) PATENT APPLICATION PUBLICATION
(21) Application No.806/KOLNP/2015 A
(19) INDIA
(22) Date of filing of Application :25/03/2015
(43) Publication Date : 25/12/2015

(54) Title of the invention : STABLE AQUEOUS FORMULATIONS OF ADALIMUMAB

(51) International classification :A61K39/00
(31) Priority Document No :61/698,138
(32) Priority Date :07/09/2012
(33) Name of priority country :U.S.A.
(86) International Application No :PCT/US2013/058618
Filing Date :06/09/2013
(87) International Publication No :WO 2014/039903
(61) Patent of Addition to Application Number :NA
Filing Date :NA
(62) Divisional to Application Number :NA
Filing Date :NA

(71)**Name of Applicant :**
1)COHERUS BIOSCIENCES, INC.
Address of Applicant :201 Redwood Shores Parkway, Suite 200, Redwood City, CA UNITED STATES OF AMERICA.
(72)**Name of Inventor :**
1)MANNING, MARK
2)PAYNE, ROBERT, W.

(57) Abstract :
The invention provides aqueous pharmaceutical adalimumab compositions suitable for long-term storage of adalimumab, methods of manufacture of these compositions, methods of administration, and kits containing same.

No. of Pages : 185 No. of Claims : 93

(12) PATENT APPLICATION PUBLICATION
(21) Application No.763/KOLNP/2015 A
(19) INDIA
(22) Date of filing of Application :19/03/2015
(43) Publication Date : 25/12/2015

(54) Title of the invention : COOPERATIVE MULTI POINT (COMP) IN A PASSIVE OPTICAL NETWORK (PON)

(51) International classification :H04Q11/00,H04L1/02
(31) Priority Document No :61/825404
(32) Priority Date :20/05/2013
(33) Name of priority country :U.S.A.
(86) International Application No :PCT/US2014/038821
Filing Date :20/05/2014
(87) International Publication No :WO 2014/189953
(61) Patent of Addition to Application Number :NA
Filing Date :NA
(62) Divisional to Application Number :NA
Filing Date :NA

(71)**Name of Applicant :**
1)HUAWEI TECHNOLOGIES CO. LTD.
Address of Applicant :Huawei Administration Building Bantian Longgang District Shenzhen Guangdong 518129 China
(72)**Name of Inventor :**
1)HUAWEI TECHNOLOGIES CO. LTD.

(57) Abstract :
A method for error detection within a passive optical network (PON) the method comprising receiving a first upstream optical signal that is copied at an optical splitter converting the first upstream optical signal to a first electrical signal receiving a second electrical signal that is converted from a second upstream optical signal that is copied at the optical splitter and determining a corrected transmitted data stream using at least the first electrical signal and the second electrical signal wherein the first upstream optical signal and the second upstream optical signal are copies of an upstream optical signal generated from a plurality of optical network units (ONUs).

No. of Pages : 28 No. of Claims : 20

(12) PATENT APPLICATION PUBLICATION
(19) INDIA
(22) Date of filing of Application :20/03/2015
(21) Application No.764/KOLNP/2015 A
(43) Publication Date : 25/12/2015

(54) Title of the invention : A DIGITAL SPLINT

(51) International classification :A61C1/08,A63B71/08,A61F5/56
(31) Priority Document No :GB1216214.5
(32) Priority Date :12/09/2012
(33) Name of priority country :U.K.
(86) International Application No :PCT/EP2013/002557
Filing Date :26/08/2013
(87) International Publication No :WO 2014/040697
(61) Patent of Addition to Application Number :NA
Filing Date :NA
(62) Divisional to Application Number :NA
Filing Date :NA

(71)**Name of Applicant :**
1)NOBEL BIOCARE SERVICES AG
Address of Applicant :Balz Zimmermann Strasse 7 CH 8302 Kloten Switzerland
(72)**Name of Inventor :**
1)NOBEL BIOCARE SERVICES AG

(57) Abstract :
A method of producing a dental splint comprising the steps of: obtaining a set of 3D surface data the 3D surface data representing a surface of a patient s oral situation and generating a support structure model in dependence on the 3D surface data and producing the dental splint in dependence on the support structure model wherein a 3D distance map image of the 3D surface data is used to generate the support structure model.

No. of Pages : 36 No. of Claims : 10

(12) PATENT APPLICATION PUBLICATION
(19) INDIA
(22) Date of filing of Application :30/03/2015
(21) Application No.829/KOLNP/2015 A
(43) Publication Date : 25/12/2015

(54) Title of the invention : EVAPORATION HEAT TRANSFER TUBE WITH A HOLLOW CAVITY

(51) International classification :F28F1/42
(31) Priority Document No :201210451686.7
(32) Priority Date :12/11/2012
(33) Name of priority country :China
(86) International Application No :PCT/EP2013/003332
Filing Date :06/11/2013
(87) International Publication No :WO 2014/072046
(61) Patent of Addition to Application Number :NA
Filing Date :NA
(62) Divisional to Application Number :NA
Filing Date :NA

(71)**Name of Applicant :**
1)WIELAND-WERKE AG
Address of Applicant :Graf-Arco-Strasse 36, 89079 Ulm GERMANY
(72)**Name of Inventor :**
1)BEUTLER, ANDREAS
2)SCHWITALLA, ANDREAS
3)CAO,JIANYING
4)LUO, ZHONG

(57) Abstract :
The present invention relates to an evaporation heat transfer tube with a hollow cavity, comprising a tube main body and at least one hollow frustum structure. Outer fins are arranged at intervals on the outer surface of the tube main body and inter-fin grooves are formed between two adjacent outer fins. The hollow frustum structure is arranged at the bottom of the inter-fin grooves and surrounded by side walls. The top of the hollow frustum structure is provided with an opening. The side walls extend inwards and upwards from the bottom of the inter-fin grooves and thus the area of the opening is less than the area of the bottom of the hollow frustum structure. The inner surface and the outer surface of the side walls are intersected at the opening to form a flange. Preferably, the flange is a sharp corner and the radius of the curvature is 0 to 0.01 mm. The side walls are formed by at least two surfaces which are connected to each other. The hollow frustum structure is hollow pyramid frustum shaped, hollow volcano shaped or hollow cone frustum shaped. The height Hr and the height H of the inter-fin grooves meet the following relations: Hr/H is greater than or equal to 0.2. The present invention is ingeniously designed and concisely structured and it remarkably enhances the boiling coefficient between the outer surface of the tube and the liquid outside the tube, reinforcing the heat transfer in boiling and it is suitable for large-scale popularization and application.

No. of Pages : 20 No. of Claims : 12

(12) PATENT APPLICATION PUBLICATION
(19) INDIA
(22) Date of filing of Application :31/03/2015
(21) Application No.857/KOLNP/2015 A
(43) Publication Date : 25/12/2015

(54) Title of the invention : METHODS AND APPARATUSES FOR INCREASING MUCOCILIARY CLEARANCE

(51) International classification :A61M29/02,A61B1/00,A61B5/00
(31) Priority Document No :61/709,806
(32) Priority Date :04/10/2012
(33) Name of priority country :U.S.A.
(86) International Application No :PCT/US2013/062169
Filing Date :27/09/2013
(87) International Publication No :WO 2014/055348
(61) Patent of Addition to Application Number :NA
Filing Date :NA
(62) Divisional to Application Number :NA
Filing Date :NA

(71)**Name of Applicant :**
1)VENTAERX, INC.
Address of Applicant :704 Grape Ave., Sunnyvale, California 94087 UNITED STATES OF AMERICA.
(72)**Name of Inventor :**
1)CHIA, YIP-FONG

(57) Abstract :
The present invention provides non-invasive methods and apparatuses for increasing mucociliary clearance (MCC) of a subject to prevent, treat, or improve MCC in conditions such as Eustachian tube dysfunction, otitis media, and diseases of the upper and/or lower respiratory tracts. As described herein, the methods and apparatuses of the present invention increase MCC by applying non-invasive external movement/force to a subject to generate internal mechanical oscillating shear stress in the subject for prophylactic or therapeutic use in subjects at risk of developing or having a condition of the upper and lower respiratory system, Eustachian tube, or middle ear that is caused by impairment of the MCC system.

No. of Pages : 58 No. of Claims : 27

(12) PATENT APPLICATION PUBLICATION
(21) Application No.858/KOLNP/2015 A
(19) INDIA
(22) Date of filing of Application :31/03/2015
(43) Publication Date : 25/12/2015

(54) Title of the invention : SPHERICAL BAND-SHAPED SEALING BODY AND METHOD FOR PRODUCING SAME

(51) International classification :C09 K 3/10
(31) Priority Document No :2012-229114
(32) Priority Date :16/10/2012
(33) Name of priority country :Japan
(86) International Application No :PCT/JP2013/004967
Filing Date :22/08/2013
(87) International Publication No :WO 2014/061184
(61) Patent of Addition to Application Number :NA
Filing Date :NA
(62) Divisional to Application Number :NA
Filing Date :NA

(71)**Name of Applicant :**
1)OILES CORPORATION
Address of Applicant :6-34, KOUNAN 1-CHOME, MINATO-KU, TOKYO 1080075 JAPAN
(72)**Name of Inventor :**
1)YOSHIDA, ATSUSHI
2)SATOU, EIJI
3)SHIONOYA, SHIN-ICHI
4)KOIBUCHI, RYOTA

(57) Abstract :
This spherical band-shaped sealing body (38) is a spherical band-shaped sealing body that is used for an exhaust pipe joint, and comprises: a spherical band-shaped base body (36) defined by a cylindrical inner surface (32), a partially convex spherical surface (33), and annular end surfaces (34, 35) each on the large-diameter side and the small-diameter side of the partially convex spherical surface (33); and an outer layer (37) formed integrally with the partially convex spherical surface (33) of the spherical band-shaped base body (36). The spherical band-shaped base body (36) comprises: a reinforcement material made of a metal wire netting (5); and a heat-resistant material that fills the meshes in the metal wire netting (5) of the reinforcement material, is intermingled and integrated with the reinforcement material, and includes expanded graphite which has been compressed. In the outer layer (37), the reinforcement material, the heat-resistant material, and a solid lubricant are intermingled and integrated together.

No. of Pages : 102 No. of Claims : 26

(12) PATENT APPLICATION PUBLICATION
(19) INDIA
(22) Date of filing of Application :06/04/2015
(21) Application No.937/KOLNP/2015 A
(43) Publication Date : 25/12/2015

(54) Title of the invention : METHOD AND SYSTEM FOR CREATING TAX CONFIGURATION TEMPLATES

(51) International classification :G06Q40/00
(31) Priority Document No :13/655,313
(32) Priority Date :18/10/2012
(33) Name of priority country :U.S.A.
(86) International Application No :PCT/US2013/065802
Filing Date :19/10/2013
(87) International Publication No :WO 2014/063127
(61) Patent of Addition to Application Number :NA
Filing Date :NA
(62) Divisional to Application Number :NA
Filing Date :NA

(71)**Name of Applicant :**
1)INTUIT INC.
Address of Applicant :2700 Coast Avenue, Mountain View, California 94043 UNITED STATES OF AMERICA.
(72)**Name of Inventor :**
1)SHARMA, ANIL
2)PESHWE, SHIRISH
3)VERMA, ANSHU
4)PAI, YOGISH
5)BLITZ, RICHARD

(57) Abstract :
)Individuals implementing/using a financial management system are provided the capability to share their customized and regionally optimized tax configurations with other individuals utilizing the financial management system. The customized and regionally optimized tax configurations are provided to other individuals in the form of tax configuration templates optimized and identified for a given region and/or type of business within the identified region. In various embodiments, the tax configuration templates for a given region can then be viewed, selected, and adopted by other individuals using the financial management system.

No. of Pages : 50 No. of Claims : 30

(12) PATENT APPLICATION PUBLICATION
(19) INDIA
(22) Date of filing of Application :20/03/2015
(21) Application No.773/KOLNP/2015 A
(43) Publication Date : 25/12/2015

(54) Title of the invention : ANTI-PAIN AND ANTI-NAUSEA AND/OR VOMITING COMBINATORIAL COMPOSITIONS

(51) International classification :A61K9/00,A61K31/00,A61K47/10
(31) Priority Document No :61/700,146
(32) Priority Date :12/09/2012
(33) Name of priority country :U.S.A.
(86) International Application No :PCT/US2013/059460
Filing Date :12/09/2013
(87) International Publication No :WO 2014/043346
(61) Patent of Addition to Application Number :NA
Filing Date :NA
(62) Divisional to Application Number :NA
Filing Date :NA

(71)**Name of Applicant :**
1)MONOSOL RX, LLC
Address of Applicant :30 Technology Drive, Warren, NJ 07059 UNITED STATES OF AMERICA.
(72)**Name of Inventor :**
1)DADEY, ERIC
2)MYERS, GARRY
3)BARBER, DANIEL
4)SCHOBEL, MARK

(57) Abstract :
In one aspect, the present invention discloses combinational compositions for treating users experiencing symptoms associated with a migraine or other central nervous system related pain disorder that can cause or exacerbate nausea and/or vomiting or other central nervous system related pain disorder that can cause or exacerbate nausea and/or vomiting. The combinational composition includes a first pharmaceutical active component for treating pain, and a second pharmaceutical active component for treating nausea and/or vomiting and/or vomiting in a user.

No. of Pages : 59 No. of Claims : 50

(12) PATENT APPLICATION PUBLICATION
(19) INDIA
(22) Date of filing of Application :20/03/2015
(21) Application No.774/KOLNP/2015 A
(43) Publication Date : 25/12/2015

(54) Title of the invention : CELLULAR NETWORK BASED CONTROL OF VEHICLE TO VEHICLE COMMUNICATION

(51) International classification	:H04W4/04,G08G1/16,H04W72/00
(31) Priority Document No	:NA
(32) Priority Date	:NA
(33) Name of priority country	:NA
(86) International Application No	:PCT/EP2012/069187
Filing Date	:28/09/2012
(87) International Publication No	:WO 2014/048486
(61) Patent of Addition to Application Number	:NA
Filing Date	:NA
(62) Divisional to Application Number	:NA
Filing Date	:NA

(71)**Name of Applicant :**
1)TELEFONAKTIEBOLAGET L M ERICSSON (PUBL)
Address of Applicant :S 16483 Stockholm Sweden
(72)**Name of Inventor :**
1)TELEFONAKTIEBOLAGET L M ERICSSON (PUBL)

(57) Abstract :
A vehicle to vehicle communication device (100; 100) is provided with access to a cellular network (200 210). The cellular network (200 210) implements at least a first radio technology. The vehicle to vehicle communication device (100 100) further supports a second radio technology for vehicle to vehicle communication. For controlling vehicle to vehicle communication by the second radio technology data from the cellular network (200 210) are provided to the vehicle to vehicle communication device (100 100). For example such data may be derived from presence or mobility information available in the cellular network (200 210). On the basis of the data from the cellular network (200 210) the vehicle to vehicle communication device (100 100) sets at least one control parameter of vehicle to vehicle communication by the second radio technology e.g. a rate of sending a message or a transmission power utilized by the second radio technology.

No. of Pages : 27 No. of Claims : 23

(12) PATENT APPLICATION PUBLICATION
(19) INDIA
(22) Date of filing of Application :30/03/2015
(21) Application No.832/KOLNP/2015 A
(43) Publication Date : 25/12/2015

(54) Title of the invention : RADIAL-FLOW SCRUBBER

(51) International classification :B01D47/10
(31) Priority Document No :NA
(32) Priority Date :NA
(33) Name of priority country :NA
(86) International Application No :PCT/EP2012/004181
Filing Date :05/10/2012
(87) International Publication No :WO 2014/053150
(61) Patent of Addition to Application Number :NA
Filing Date :NA
(62) Divisional to Application Number :NA
Filing Date :NA

(71)**Name of Applicant :**
1)OUTOTEC (FINLAND) OY
Address of Applicant :Rauhalanpuisto 9, FI-02230 Espoo FINLAND
(72)**Name of Inventor :**
1)SCHURTAKOW, BERND
2)NIXDORFF, HENNING
3)G–LLNER, ALEXANDER
4)SERDARUSIC, GERTRUD

(57) Abstract :
A radial-flow scrubber (1, 100) for separating dust and pollutants from gases, comprises a housing (2), a raw gas inlet (3), a feeder (4) for a washing liquid, a washing zone (5), a clean gas outlet (10), and an outlet (11) for the washing liquid. The washing zone (5, 101) comprises an inlet funnel (7, 105), a scrubbing zone (18) having an adjustable flow cross-section, and a drive (10, 110) for adjusting the cross section of the scrubbing zone (18), as well as a tubular shell (8,108) detachably mounted to the housing (2), wherein in a ceiling of the housing (2) an opening is provided through which the complete washing zone (5, 101) can be integrally withdrawn.

No. of Pages : 15 No. of Claims : 9

(12) PATENT APPLICATION PUBLICATION
(21) Application No.833/KOLNP/2015 A
(19) INDIA
(22) Date of filing of Application :30/03/2015
(43) Publication Date : 25/12/2015

(54) Title of the invention : METHOD FOR PRODUCING PARTICLES AND APPARATUS FOR PRODUCING PARTICLES

(51) International classification :B01J2/04,B01F3/08,B01F3/10
(31) Priority Document No :2012-249119
(32) Priority Date :13/11/2012
(33) Name of priority country :Japan
(86) International Application No :PCT/JP2013/080362
Filing Date :01/11/2013
(87) International Publication No :WO 2014/077206
(61) Patent of Addition to Application Number :NA
Filing Date :NA
(62) Divisional to Application Number :NA
Filing Date :NA

(71)**Name of Applicant :**
1)RICOH COMPANY, LTD.
Address of Applicant :3-6, Nakamagome 1-chome, Ohta-ku, Tokyo 1438555 JAPAN
(72)**Name of Inventor :**
1)OSAKA, Keiko
2)TANAKA, Chiaki
3)SUZUKI, Akira
4)KAWASAKI Shinichiro

(57) Abstract :
To provide a method for producing particles, which contains: bringing a compressive fluid and a pressure plastic material into contact with each other using a multistage split flow micromixer, to thereby produce a melt of the pressure plastic material, in which the compressive fluid is dissolved; and jetting the melt of the pressure plastic material, to form particles, wherein the pressure plastic material is a resin having a carbonyl structure —C(=O)—, and wherein a viscosity of the melt is 500 mPa . s or lower, as measured under temperature and pressure conditions at the time of the jetting the melt of the pressure plastic material.

No. of Pages : 61 No. of Claims : 10

(12) PATENT APPLICATION PUBLICATION
(19) INDIA
(22) Date of filing of Application :06/04/2015
(21) Application No.936/KOLNP/2015 A
(43) Publication Date : 25/12/2015

(54) Title of the invention : MULTILAYER BIODEGRADABLE MICROPARTICLES FOR SUSTAINED RELEASE OF THERAPEUTIC AGENTS

(51) International classification :A61K9/58
(31) Priority Document No :61/703,743
(32) Priority Date :20/09/2012
(33) Name of priority country :U.S.A.
(86) International Application No :PCT/US2013/060987
Filing Date :20/09/2013
(87) International Publication No :WO 2014/047477
(61) Patent of Addition to Application Number :NA
Filing Date :NA
(62) Divisional to Application Number :NA
Filing Date :NA

(71)**Name of Applicant :**
1)OHR PHARMA, LLC
Address of Applicant :57 Meadow Woods Road, Great Neck, New York 11020 UNITED STATES OF AMERICA.
(72)**Name of Inventor :**
1)RHODES, CHRIS
2)MALAVIA, NIKITA
3)JENNINGS, ROBERT
4)LAXMA, REDDY
5)NORMAN, BETTY

(57) Abstract :
Microparticles are prepared by a method that includes: (a) forming a layer comprising a first polymer on a solid surface by depositing a first composition one or more times on the solid surface, wherein the first composition comprises the first polymer and a first solvent, and evaporating the first solvent in the first composition; (b) forming one or more layers comprising a second polymer and a therapeutic agent by depositing a second composition on all or part of the layer formed in step (a), wherein the second composition comprises the second polymer, the therapeutic agent, and a second solvent; and evaporating the second solvent in the second composition; and (c) forming an additional layer comprising a third polymer by depositing a third composition one or more times on a previously formed layer.

No. of Pages : 30 No. of Claims : 47

(12) PATENT APPLICATION PUBLICATION
(19) INDIA
(22) Date of filing of Application :30/03/2015
(21) Application No.828/KOLNP/2015 A
(43) Publication Date : 25/12/2015

(54) Title of the invention : AUTOMATED COMPOSITION EVALUATOR

(51) International classification :G06F17/00,G06K9/00,G06K9/62
(31) Priority Document No :61/698,437
(32) Priority Date :07/09/2012
(33) Name of priority country :U.S.A.
(86) International Application No :PCT/US2013/058629
Filing Date :06/09/2013
(87) International Publication No :WO 2014/039911
(61) Patent of Addition to Application Number :NA
Filing Date :NA
(62) Divisional to Application Number :NA
Filing Date :NA

(71)**Name of Applicant :**
1)AMERICAN CHEMICAL SOCIETY
Address of Applicant :1155 Sixteenth Street, NW Washington, D.C. 20036 UNITED STATES OF AMERICA.
(72)**Name of Inventor :**
1)FISHER, Jeffrey
2)LEVY, David Paul
3)SULLIVAN,John

(57) Abstract :
Systems and methods are provided for evaluating composition of a first file representing a document to be evaluated. An evaluation method transforms the first file to a second file. The second file includes a plurality of objects corresponding to the composition of the first file. The evaluation method also determines parameters based on the plurality of objects; evaluates the parameters based on a plurality of composition rules provided by a rule engine; generates evaluation findings and stores the evaluation findings; and generates an evaluation conclusion based on the evaluation findings. The evaluation conclusion indicates compliance of the document according to the composition rules.

No. of Pages : 86 No. of Claims : 30

(12) PATENT APPLICATION PUBLICATION
(21) Application No.960/KOLNP/2015 A
(19) INDIA
(22) Date of filing of Application :08/04/2015
(43) Publication Date : 25/12/2015

(54) Title of the invention : SYSTEM AND METHOD FOR OPERATING PARALLEL REACTORS

(51) International classification :B01J19/00
(31) Priority Document No :2009659
(32) Priority Date :18/10/2012
(33) Name of priority country :Netherlands
(86) International Application No :PCT/NL2013/050723
Filing Date :11/10/2013
(87) International Publication No :WO 2014/062055
(61) Patent of Addition to Application Number :NA
Filing Date :NA
(62) Divisional to Application Number :NA
Filing Date :NA

(71)**Name of Applicant :**
1)AVANTIUM TECHNOLOGIES B.V.
Address of Applicant :29, Zekeringstraat, NL-1014 BV Amsterdam NETHERLANDS
(72)**Name of Inventor :**
1)MOONEN, ROELANDUS HENDRIKUS WILHELMUS

(57) Abstract :
The invention pertains to a system for operating parallel reactors, which comprises: -a plurality of reactor assemblies, each reactor assembly comprising: -a flow-through reactor -a reactor feed line, -a reactor effluent line, -a primary fluid source, -a flow splitter which is arranged downstream of the primary fluid source and upstream of the reactor assemblies, and wherein all passive flow restrictors have an substantially equal resistance to fluid flow wherein the system further comprises a feed line pressure measurement device, wherein in each effluent line an individually controllable backpressure regulator is provided, and wherein further a pressure control arrangement is provided, said pressure control arrangement being linked to said feed line pressure measurement device and said backpressure regulators, said pressure control arrangement comprising an input device allowing to input a feed line pressure setpoint, said desired feed line pressure being the same for all reactor assemblies, wherein said pressure control arrangement is adapted to individually control the backpressure regulators such that the measured feed line pressure becomes substantially the same as the feed line pressure setpoint, and therewith substantially the same as the feed line pressures in the other reactor assemblies.

No. of Pages : 35 No. of Claims : 20

(12) PATENT APPLICATION PUBLICATION
(21) Application No.961/KOLNP/2015 A
(19) INDIA
(22) Date of filing of Application :08/04/2015
(43) Publication Date : 25/12/2015

(54) Title of the invention : METHOD AND APPARATUS FOR PERFORMING BACKOFF FOR SCHEDULING REQUEST IN WIRELESS COMMUNICATION SYSTEM

(51) International classification :H04W74/08,H04W72/12
(31) Priority Document No :61/717,616
(32) Priority Date :23/10/2012
(33) Name of priority country :U.S.A.
(86) International Application No :PCT/KR2013/009483
Filing Date :23/10/2013
(87) International Publication No :WO 2014/065592
(61) Patent of Addition to Application Number :NA
Filing Date :NA
(62) Divisional to Application Number :NA
Filing Date :NA

(71)**Name of Applicant :**
1)LG ELECTRONICS INC.
Address of Applicant :20 Yeouido-dong, Yeongdeungpo-gu, Seoul, 150-721 REPUBLIC OF KOREA
(72)**Name of Inventor :**
1)LEE, YOUNGDAE
2)PARK, SUNGJUN
3)YI, SEUNGJUNE
4)JUNG, SUNGHOON

(57) Abstract :
A method and apparatus for scheduling uplink (UL) transmission in a wireless communication system is provided. A user equipment (UE) receives a backoff parameter from a network, and determines whether or not to apply the received backoff parameter before transmitting a scheduling request (SR) to the network via a dedicated channel. Whether or not to apply the received backoff parameter is determined according to a prioritized access, and the prioritized access corresponds to one of emergency access, high priority access, control element/information in media access control (MAC), radio link control (RLC) or packet data convergence protocol (PDCP), data radio bearer (DRB) for voice/video service, signaling radio bearer (SRB) 0, SRB 1, SRB 2, multimedia telephony service (MMTEL)-voice, MMTEL-video, and voice over long-term evolution (VoLTE).

No. of Pages : 21 No. of Claims : 15

(12) PATENT APPLICATION PUBLICATION
(19) INDIA
(22) Date of filing of Application :21/03/2015
(21) Application No.779/KOLNP/2015 A
(43) Publication Date : 25/12/2015

(54) Title of the invention : METHOD AND DEVICE FOR THAWING BIOLOGICAL MATERIAL

(51) International classification :A01N1/02,B01L7/00
(31) Priority Document No :61/720552
(32) Priority Date :31/10/2012
(33) Name of priority country :U.S.A.
(86) International Application No :PCT/IB2013/059808
Filing Date :31/10/2013
(87) International Publication No :WO 2014/068508
(61) Patent of Addition to Application Number :NA
Filing Date :NA
(62) Divisional to Application Number :NA
Filing Date :NA

(71)**Name of Applicant :**
1)PLURISTEM LTD.
Address of Applicant :MATAM Park Building 20 31905 Haifa Israel
(72)**Name of Inventor :**
1)PLURISTEM LTD.

(57) Abstract :
This disclosure is a system for heating a biological material in a vessel. The system can include a heating device configured to transmit energy to the vessel and a base moveably coupled to the heating device. The system can also include a processor configured to receive an input associated with a target temperature and transmit a signal to controllably move the heating device relative to the base for a time period wherein the time period is determined based on the target temperature and content volume.

No. of Pages : 24 No. of Claims : 16

(12) PATENT APPLICATION PUBLICATION
(21) Application No.840/KOLNP/2015 A
(19) INDIA
(22) Date of filing of Application :30/03/2015
(43) Publication Date : 25/12/2015

(54) Title of the invention : SHIPPING WORK PLANNING SYSTEM, SHIPPING WORK PLANNING METHOD, AND SHIPPING WORK METHOD

(51) International classification :B65G63/00,G06Q50/28
(31) Priority Document No :2012-227907
(32) Priority Date :15/10/2012
(33) Name of priority country :Japan
(86) International Application No :PCT/JP2013/006098
Filing Date :11/10/2013
(87) International Publication No :WO 2014/061252
(61) Patent of Addition to Application Number :NA
Filing Date :NA
(62) Divisional to Application Number :NA
Filing Date :NA

(71)**Name of Applicant :**
1)JFE STEEL CORPORATION
Address of Applicant :2-3, Uchisaiwai-cho 2-chome, Chiyoda-ku, Tokyo 1000011 JAPAN
(72)**Name of Inventor :**
1)TOMIYAMA, SHINJI

(57) Abstract :
This shipping work planning system comprises: storage units (3, 2) for storing product information (31), progress information (32), transportation planning information (33), shipping planning information (34), and equipment information; a target loading time calculation unit (52) for calculating target loading times when loading is performed without waiting for cargo; a general work plan preparing unit (53) for determining, so as to meet the target loading times, work to be performed within a time period that is preset with set time period information for the equipment information and cargo handling equipment and cargo transporting equipment to be used for the work; a detailed work plan preparing unit (54) for determining processing times for cargo handling equipment and cargo transporting equipment operations that are determined by the general work plan preparing unit (53); and a plan output unit (6) for outputting the results created with the detailed work plan preparing unit (54). By virtue of this configuration, a work plan for shipping work, by which shipping products are loaded onto a ship, can be created in a short time.

No. of Pages : 90 No. of Claims : 7

(12) PATENT APPLICATION PUBLICATION
(19) INDIA
(22) Date of filing of Application :23/03/2015
(21) Application No.790/KOLNP/2015 A
(43) Publication Date : 25/12/2015

(54) Title of the invention : ROBOTIC DEVICE AND SYSTEM SOFTWARE HARDWARE AND METHODS OF USE FOR IMAGE GUIDED AND ROBOT ASSISTED SURGERY

(51) International classification	:A61B17/00,A61B19/00,A61B5/055
(31) Priority Document No	:61/693534
(32) Priority Date	:27/08/2012
(33) Name of priority country	:U.S.A.
(86) International Application No	:PCT/US2013/056903
Filing Date	:27/08/2013
(87) International Publication No	:WO 2014/036034
(61) Patent of Addition to Application Number	:NA
Filing Date	:NA
(62) Divisional to Application Number	:NA
Filing Date	:NA

(71)**Name of Applicant :**
1)UNIVERSITY OF HOUSTON
Address of Applicant :316 E. Cullen Building Houston TX 77204 2015 U.S.A.
(72)**Name of Inventor :**
1)UNIVERSITY OF HOUSTON

(57) Abstract :
Provided herein are systems modules and methods of using the same for in situ real time imaging guidance of a robot during a surgical procedure. The systems comprise a plurality of modules that intraoperatively link an imaging modality particularly a magnetic resonance imaging modality a medical robot and an operator thereof via a plurality of interfaces. The modules are configured to operate in at least one computer having a memory a processor and a network connection to enable instructions to generally control the imaging modality track the robot track a tissue of interest in an area of procedure process data acquire from imaging modality and the robot and visualize the area and robot. Also provided are non transitory computer readable data storage medium storing computer executable instructions comprising the modules and a computer program produce tangibly embodied in the storage medium.

No. of Pages : 76 No. of Claims : 43

(12) PATENT APPLICATION PUBLICATION
(21) Application No.791/KOLNP/2015 A
(19) INDIA
(22) Date of filing of Application :24/03/2015
(43) Publication Date : 25/12/2015

(54) Title of the invention : TIME DISTRIBUTION DEVICE WITH MULTI BAND ANTENNA

(51) International classification :G01S19/03,G01R31/08
(31) Priority Document No :61/716397
(32) Priority Date :19/10/2012
(33) Name of priority country :U.S.A.
(86) International Application No :PCT/US2013/065447
Filing Date :17/10/2013
(87) International Publication No :WO 2014/062924
(61) Patent of Addition to Application Number :NA
Filing Date :NA
(62) Divisional to Application Number :NA
Filing Date :NA

(71)**Name of Applicant :**
1)SCHWEITZER ENGINEERING LABORATORIES INC.
Address of Applicant :2350 NE Hopkins Court Pullman WA 99163 U.S.A.
(72)**Name of Inventor :**
1)SCHWEITZER ENGINEERING LABORATORIES INC.

(57) Abstract :
Systems and methods for detecting the failure of a precision time source using an independent time source are disclosed. Additionally detecting the failure of a GNSS based precision time source based on a calculated location of a GNSS receiver is disclosed. Moreover the system may be further configured to distribute a time derived from the precision time source as a precision time reference to time dependent devices. In the event of a failure of the precision time source the system may be configured to distribute a time derived from a second precision time source as the precision time signal during a holdover period.

No. of Pages : 27 No. of Claims : 19

(12) PATENT APPLICATION PUBLICATION
(21) Application No.802/KOLNP/2015 A
(19) INDIA
(22) Date of filing of Application :25/03/2015
(43) Publication Date : 25/12/2015

(54) Title of the invention : BUILDING SYSTEM PARTICULARLY A RESIDENTIAL BUILDING

(51) International classification :E04B1/26,E04B2/96
(31) Priority Document No :12188775.6
(32) Priority Date :17/10/2012
(33) Name of priority country :EPO
(86) International Application No :PCT/EP2013/068893
Filing Date :12/09/2013
(87) International Publication No :WO 2014/060155
(61) Patent of Addition to Application Number :NA
Filing Date :NA
(62) Divisional to Application Number :NA
Filing Date :NA

(71)**Name of Applicant :**
1)TER HUURNE Andre
Address of Applicant :Am Kaiserkai 55 20457 Hamburg Germany
(72)**Name of Inventor :**
1)TER HUURNE Andre

(57) Abstract :
The invention relates to a building system particularly a residential building with a skeleton structure consisting of posts (14) and crossbeams (24) erected on a ground slab (9) wherein the skeleton fields are provided with typified filling panels (10) windows (12) and doors (20). According to the invention: the filling panels are arranged in a substantially flush manner between the posts and the crossbeams; the filling panels (10) comprise multiple layers with an inner cover panel (17) an outer cover panel (16) and frame strips (29) running between the inner cover panel (17) and the outer cover panel (16) with insulation (15) enclosed therebetween; connecting means (30) designed as detachable fittings are provided in the skeleton fields for connecting the posts (14) and the crossbeams (24) to the filling panels (10) arranged flushly therewith; each outer edge of the outer cover panel (16) of each filling panel (10) overlaps the adjacent post (14) or crossbeam (24) at least in part; and the connecting means (30) clamp the regions of the outer cover panel (16) that overlap the posts (14) or crossbeams (24) to the posts (14) or crossbeams (24).

No. of Pages : 29 No. of Claims : 14

(12) PATENT APPLICATION PUBLICATION
(19) INDIA
(22) Date of filing of Application :25/03/2015
(21) Application No.803/KOLNP/2015 A
(43) Publication Date : 25/12/2015

(54) Title of the invention : METHOD AND APPARATUS FOR PROCESSING PACKET

(51) International classification :H04L12/801
(31) Priority Document No :1020120108047
(32) Priority Date :27/09/2012
(33) Name of priority country :Republic of Korea
(86) International Application No :PCT/KR2013/008711
Filing Date :27/09/2013
(87) International Publication No :WO 2014/051392
(61) Patent of Addition to Application Number :NA
Filing Date :NA
(62) Divisional to Application Number :NA
Filing Date :NA

(71)**Name of Applicant :**
1)SAMSUNG ELECTRONICS CO. LTD.
Address of Applicant :129 Samsung ro Yeongtong gu Suwon si Gyeonggi do 443 742 Republic of Korea
(72)**Name of Inventor :**
1)JEONG Sang Soo
2)CHO Song Yean
3)SON Jung Je
4)LIM Han Na
5)CHOI Sung Ho

(57) Abstract :
The present invention relates to a method and an apparatus for processing a packet. The method for processing a packet of a base station according to one embodiment of the present invention comprises: a step for acquiring rule information related to a method for processing a corresponding packet according to additional information included in a packet header; a step for receiving the packet; a step for acquiring the additional information from a header of the received packet; and a packet processing step for processing the received packet according to the acquired rule information and the acquired additional information. The base station can implement a proper packet control according to a state thereof according to one embodiment of the present invention.

No. of Pages : 72 No. of Claims : 20

(12) PATENT APPLICATION PUBLICATION
(19) INDIA
(22) Date of filing of Application :06/04/2015
(21) Application No.933/KOLNP/2015 A
(43) Publication Date : 25/12/2015

(54) Title of the invention : METHODS AND COMPOSITIONS FOR TREATMENT OF RETINAL DEGENERATION

(51) International classification :A61P27/02,A61K35/28
(31) Priority Document No :61/711,665
(32) Priority Date :09/10/2012
(33) Name of priority country :U.S.A.
(86) International Application No :PCT/US2013/030983
Filing Date :13/03/2013
(87) International Publication No :WO 2014/058464
(61) Patent of Addition to Application Number :NA
Filing Date :NA
(62) Divisional to Application Number :NA
Filing Date :NA

(71)**Name of Applicant :**
1)SANBIO, INC.
Address of Applicant :231 S. Whisman Road, Mountain View, California 94041-1522 UNITED STATES OF AMERICA.
(72)**Name of Inventor :**
1)CASE, CASEY C
2)KAWANISHI, TORU
3)NORIYUKI, KUNO

(57) Abstract :
Disclosed herein are methods and compositions for treating retinal degeneration, such as occurs in retinitis pigmentosa and age-related macular degeneration, using descendents of marrow adherent stem cells that have been engineered to express an exogenous Notch intracellular domain.

No. of Pages : 31 No. of Claims : 6

(12) PATENT APPLICATION PUBLICATION
(21) Application No.3882/KOLNP/2009 A
(19) INDIA
(22) Date of filing of Application :09/11/2009
(43) Publication Date : 25/12/2015

(54) Title of the invention : MECHANICAL PROSTHETIC HEART VALVE

(51) International classification :A61F 2/24
(31) Priority Document No :0703164
(32) Priority Date :02/05/2007
(33) Name of priority country :France
(86) International Application No :PCT/FR2008/000621
Filing Date :30/04/2008
(87) International Publication No :WO 2008/152224
(61) Patent of Addition to Application Number :NA
Filing Date :NA
(62) Divisional to Application Number :NA
Filing Date :NA

(71)**Name of Applicant :**
1)LAPEYRE INDUSTRIES LLC
Address of Applicant :C/O ALSTON & BIRD, 1201 W. PEACHTREE STREET, ATLANTA 30309 UNITED STATES OF AMERICA.
(72)**Name of Inventor :**
1)LAPEYRE, DIDIER

(57) Abstract :
The invention relates to a mechanical prosthetic heart valve, comprising an annular support (12) on which at least two movable flaps (18, 20, 22) and several articular extensions (32, 34, 36) are arranged in an articulated manner. Each flap comprises a central part (38) framed by two lateral wings that each cooperate with an articular extension by way of an end portion that has an articulation facet. The two articulation facets of each flap together make up a surface area of less than 5% of the total outer surface area of the flap.

No. of Pages : 65 No. of Claims : 43

(12) PATENT APPLICATION PUBLICATION
(19) INDIA
(22) Date of filing of Application :26/03/2015
(21) Application No.811/KOLNP/2015 A
(43) Publication Date : 25/12/2015

(54) Title of the invention : BRAKE PEDAL DEVICE AND ATTACHMENT METHOD THEREOF

(51) International classification :B60T7/04,B60T7/06,B60T13/02
(31) Priority Document No :PCT/JP2012/072248
(32) Priority Date :31/08/2012
(33) Name of priority country :Japan
(86) International Application No :PCT/JP2013/055726
Filing Date :01/03/2013
(87) International Publication No:WO 2014/034159
(61) Patent of Addition to Application Number :NA
Filing Date :NA
(62) Divisional to Application Number :NA
Filing Date :NA

(71)**Name of Applicant :**
1)YOROZU CORPORATION
Address of Applicant :3-7-60, Tarumachi, Kohoku-ku, Yokohama-shi, Kanagawa 222-8560, JAPAN
(72)**Name of Inventor :**
1)MASAHARU ISHIZUKI
2)TOMOYA MATSUDA
3)SHOTA TABATA

(57) Abstract :
The present invention provides a brake pedal device which one worker can easily attach, and an attachment method therefor. This brake pedal device has: a master cylinder (10) for holding a push rod (14) for producing brake-fluid pressure; a pedal box (20) for axially supporting a brake pedal (21) so as to be rotatable around a bracket part (22); and an immobilizing part (30) capable of immobilization from the vehicle-compartment side in relation to a dash panel (40) in which a through-hole (40A), into which the master cylinder can be inserted, is formed. Therein: the master cylinder, the pedal box, and the immobilizing part configure an assembly which is integrally connected by connecting the push rod to the brake pedal; and the assembly is configured so as to be capable of immobilization in relation to the dash panel from the vehicle-compartment side, by immobilizing the immobilizing part from the vehicle-compartment side in relation to the dash panel while at least a portion of the master cylinder in the axial direction thereof is inserted into the through-hole.

No. of Pages : 29 No. of Claims : 7

(12) PATENT APPLICATION PUBLICATION
(19) INDIA
(22) Date of filing of Application :01/04/2015
(21) Application No.875/KOLNP/2015 A
(43) Publication Date : 25/12/2015

(54) Title of the invention : DISPOSABLE CAPSULORHEXIS FORCEPS

(51) International classification :A61B17/00,A61B17/28,A61B17/29
(31) Priority Document No :13/675,509
(32) Priority Date :13/11/2012
(33) Name of priority country :U.S.A.
(86) International Application No :PCT/US2013/066575
Filing Date :24/10/2013
(87) International Publication No :WO 2014/078049
(61) Patent of Addition to Application Number :NA
Filing Date :NA
(62) Divisional to Application Number :NA
Filing Date :NA

(71)**Name of Applicant :**
1)ALCON RESEARCH, LTD.
Address of Applicant :6201 South Freeway, Fort Worth, Texas 76134 UNITED STATES OF AMERICA.
(72)**Name of Inventor :**
1)SCHALLER, PHILIPP
2)GRUEEBLER, RETO

(57) Abstract :
Example forceps, including forceps formed from a polymeric material, are disclosed herein. The forceps may include a forceps tip having a pair of grasping surfaces formed at a first end of a tip body and movable between an open position and a closed position. A tip connector is provided at a second end of the tip body for connection of the forceps tip to a handle. A sleeve is received over the tip body and is movable therealong for moving the grasping platforms between the open and closed positions.

No. of Pages : 38 No. of Claims : 20

(12) PATENT APPLICATION PUBLICATION
(19) INDIA
(22) Date of filing of Application :01/04/2015
(21) Application No.876/KOLNP/2015 A
(43) Publication Date : 25/12/2015

(54) Title of the invention : MICROPOROUS ZIRCONIUM SILICATE FOR TREATING HYPERKALEMIA

(51) International classification	:A61K33/24,B01J19/18,C01B33/24
(31) Priority Document No	:61/716,956
(32) Priority Date	:22/10/2012
(33) Name of priority country	:U.S.A.
(86) International Application No	:PCT/US2013/066207
Filing Date	:22/10/2013
(87) International Publication No	:WO 2014/066407
(61) Patent of Addition to Application Number	:NA
Filing Date	:NA
(62) Divisional to Application Number	:NA
Filing Date	:NA

(71)**Name of Applicant :**
1)ZS PHARMA INC.
Address of Applicant :508 Wrangler Dr., Ste. 100, Coppell, Texas 75019 UNITED STATES OF AMERICA.
(72)**Name of Inventor :**
1)KEYSER, DONALD JEFFREY
2)GUILLEM, ALVARO F.

(57) Abstract :
The present invention relates to novel microporous zirconium silicate compositions that are formulated to remove toxins, e.g. potassium ions, from the gastrointestinal tract at an elevated rate without causing undesirable side effects. The preferred formulations are designed avoid increase in pH of urine in patients and/or avoid potential entry of particles into the bloodstream of the patient. Also disclosed is a method for preparing high purity crystals of ZS-9 exhibiting an enhanced level of potassium exchange capacity. These compositions are particularly useful in the therapeutic treatment of hyperkalemia.

No. of Pages : 104 No. of Claims : 24

(12) PATENT APPLICATION PUBLICATION
(19) INDIA
(22) Date of filing of Application :07/04/2015
(21) Application No.948/KOLNP/2015 A
(43) Publication Date : 25/12/2015

(54) Title of the invention : FEMORAL HEADS, MOBILE INSERTS, ACETABULAR COMPONENTS, AND MODULAR JUNCTIONS FOR ORTHOPEDIC IMPLANTS AND METHODS OF USING FEMORAL HEADS, MOBILE INSERTS, ACETABULAR COMPONENTS, AND MODULAR JUNCTIONS FOR ORTHOPEDIC IMPLANTS

(51) International classification :A61F2/36,A61F2/30
(31) Priority Document No :61/706,439
(32) Priority Date :27/09/2012
(33) Name of priority country :U.S.A.
(86) International Application No :PCT/US2013/062203
Filing Date :27/09/2013
(87) International Publication No :WO 2014/052768
(61) Patent of Addition to Application Number :NA
Filing Date :NA
(62) Divisional to Application Number :NA
Filing Date :NA

(71)**Name of Applicant :**
1)THE GENERAL HOSPITAL CORPORATION D/B/A MASSACHUSETTS GENERAL HOSPITAL
Address of Applicant :55 Fruit Street, Boston, MA 02114 UNITED STATES OF AMERICA.
(72)**Name of Inventor :**
1)MURATOGLU, ORHUN, K
2)VARADARAJAN, KARTIK, MANGUDI
3)MALCHAU, HENRIK
4)RUBASH, HARRY, E.
5)FREIBERG, ANDREW, A
6)DUFFY, MICHAEL, PATRICK
7)ZUMBRUNN, THOMAS

(57) Abstract :
Femoral heads, mobile inserts, acetabular components, and modular junctions for orthopedic implants, e.g., hip replacement implants, and methods of using femoral heads, mobile inserts, acetabular components, and modular junctions for orthopedic implants are provided. Prosthetic femoral heads, mobile inserts, and acetabular components are provided that can alleviate soft tissue impingement, reduce implant wear, and/or reduce frictional torque. Modular junctions are provided that can minimize the incidence of loosening and micromotion that can occur at modular junctions of orthopedic implants.

No. of Pages : 118 No. of Claims : 32

Publication Under Section 43(2) in Respect of the Grant

Following Patents have been granted and any person interested in opposing these patents under Section 25(2) may at any time within one year from the date of this issue, give notice to the Controller of Patents at the appropriate office, on the prescribed form-7 along with written statement and evidence, if any.

Serial Number	Patent Number	Application Number	Date of Application	Date of Priority	Title of Invention	Name of Patentee	Date of Publication of Abstract u/s 11(A)	Appropriate Office
1	270391	6588/DELNP/2006	11/05/2005	11/05/2004	APPARATUS FOR ENABLING A MARKER PEN TO PRODUCE A LINE OR SUCCESSION OF LINES A UNIFORM AND CONSISTENT COLOUR CHANGE	LAJA MATERIALS LIMITED	31/08/2007	DELHI
2	270395	3461/DELNP/2008	31/10/2006	31/10/2005	METHOD AND SYSTEM OF OBTAINING AN ELECTROHYDRODYNAMIC FILAMENT	THE TRUSTEES OF PRINCETON UNIVERSITY	25/07/2008	DELHI
3	270396	2660/DEL/2005	05/10/2005	29/10/2004	ACTIVE SUSPENDING	BOSE CORPORATION	31/07/2009	DELHI
4	270398	2371/DELNP/2009	06/11/2007	08/11/2006	PROCESS FOR THE SYNTHESIS OF N-[3-[(2-METHOXYPHENYL)SULFANYL]-2- METHYLPROPYL]-3,4-DIHYDRO-2H-1,5-BENZOXATHIEPIN-3-AMINE	PIERRE FABRE MEDICAMENT	22/05/2009	DELHI
5	270399	4653/DELNP/2009	21/01/2008	23/01/2007	PROCESS FOR THE PREPARATION OF AN ALKANEDIOL AND A DIALKYL CARBONATE	SHELL INTERNATIONALE RESEARCH MAATSCHAPPIJ B.V	12/03/2010	DELHI
6	270400	9541/DELNP/2008	05/06/2007	27/06/2006	POLYMERS MADE WITH METALLOCENE, CATALYSTS, FOR USE IN ROTOMOLDING AND INJECTION MOLDING PRODUCTS	UNIVATION TECHNOLOGIES, LLC	20/03/2009	DELHI
7	270401	1937/DELNP/2006	24/09/2004	14/10/2003	HEAT SPREADER FOR DISPLAY DEVICE	ADVANCED ENERGY TECHNOLOGY INC.	13/07/2007	DELHI
8	270403	645/DEL/2007	23/03/2007 16:30:33		A VERSATILE PROCESS FOR THE OXIDATION OF CARBINOLS TO CARBONYLS USING TRIPHASE CATALYTIC CONDITION.	COUNCIL OF SCIENTIFIC AND INDUSTRIAL RESEARCH	10/06/2011	DELHI
9	270405	3229/DELNP/2010	03/11/2008	01/11/2007	CHEMICALLY AND PHYSICALLY MODIFIED FERTILIZER, METHODS OF PRODUCTION AND USES THEROF	HONEYWELL INTERNATIONAL INC.,	05/11/2010	DELHI

10	270406	8168/DELNP/2010	28/05/2009	02/06/2008	PROCESS FOR THE PRODUCTION OF A STORAGE-STABLE BARIUM SULPHATE HAVING GOOD DISPERSIBILITY	SACHTLEBEN CHEMIE GMBH	02/03/2012	DELHI
11	270407	3429/DELNP/2009	23/11/2007	24/11/2006	A NEW METHOD FOR PREPARING 4, 4'-(1-METHYL-1,2-ETHANDIYL)-BIS- (2,6-PIPERAZINEDIONE)	CYATHUS EXQUUIRERE PHARMAFORSCHUNGS GMBH	16/04/2010	DELHI
12	270409	1177/DEL/2006	11/05/2006 16:59:05		PROCESS FOR THE PREPARATION OF PURE RISEDRONIC ACID OR SALTS'	IND-SWIFT LABORATORIES LIMITED	16/12/2011	DELHI
13	270411	8376/DELNP/2010	04/06/2009	13/06/2008	MULTI-COMPARTMENT POUCH	THE PROCTER & GAMBLE COMPANY	02/03/2012	DELHI
14	270412	7324/DELNP/2009	08/05/2008	11/05/2007	IMPROVED PROCESS FOR WORKING UP DIACETONE ACRYLAMIDE SOLUTIONS FOR THE PREPARATION OF PURE DIACETONE ACRYLAMIDE	DSM FINE CHEMICALS AUSTRIA NFG GMBH & CO KG	25/06/2010	DELHI
15	270414	3409/DELNP/2007	25/01/2005	25/01/2005	PNEUMATIC TYRE WITH IMPROVED BEAD STRUCTURE	PIRELLI TYRE S.P.A	31/08/2007	DELHI
16	270415	5375/DELNP/2009	10/03/2008	09/03/2007	PROCESS FOR THE PREPARATION OF BETA-LACTAM COMPOUNDS	DSM IP ASSETS B.V.	23/04/2010	DELHI
17	270416	1680/DELNP/2011	02/09/2009	12/09/2008	LAUNDRY PARTICLE MADE BY EXTRUSION COMPRISING A HUEING DYE AND FATTY ACID SOAP	THE PROCTER & GAMBLE COMPANY	09/12/2011	DELHI
18	270417	2723/DELNP/2009	02/11/2007	03/11/2006	ALPHAVIRUS AND ALPHAVIRUS REPLICON PARTICLE FORMULATIONS AND METHODS	ALPHAVAX, INC	19/06/2009	DELHI
19	270418	197/DELNP/2008	25/07/2006	25/07/2005	A CD37-SPECIFIC IMMUNOGLOBULIN BINDING PROTEIN	EMERGENT PRODUCT DEVELOPMENT SEATTLE, LLC	04/07/2008	DELHI
20	270419	1776/DEL/2005	07/07/2005	19/07/2004	SHED- FORMING MECHANISM, THREE POSITION WEAVE SYSTEM AND WEAVING LOOM EQUIPPED WITH SUCH A SYSTEM	STAUBLI LYON	30/03/2007	DELHI
21	270420	10263/DELNP/2008	15/06/2007	15/06/2006	A FIRED HEATER UNIT	EXXONMOBIL RESERACH AND ENGINEERING COMPANY	20/03/2009	DELHI
22	270421	1816/DELNP/2010	17/08/2007	17/08/2007	ENERGY EFFICIENT PROCESS TO PRODUCE BIOLOGICALLY BASED FUELS	ENERGY & ENVIRONMENTAL RESEARCH CENTER FOUNDATION	13/08/2010	DELHI

23	270422	1219/DEL/2006	18/05/2006 11:20:01		Preparation of fexofenadine by using novel intermediates	IND-SWIFT LABORATORIES LIMITED	23/11/2007	DELHI
24	270432	327/DELNP/2008	11/07/2006	12/07/2005	ORAL CARE IMPLEMENT HAVING RESERVOIR FOR DISPENSING ACTIVE AGENT	COLGATE-PALMOLIVE COMPANY	25/07/2008	DELHI
25	270433	6090/DELNP/2006	21/03/2005	22/03/2004	METHOD OF CONTROLLING A SURGICAL SYSTEM BASED ON A RATE OF CHANGE OF AN OPERATING PARAMETER	ALCON,INC.	31/08/2007	DELHI
26	270434	748/DELNP/2009	28/09/2007	28/09/2006	ETHANOL PRODUCTION USING XYLITOL SYNTHESIS MUTANT OF XYLOSE-UTILIZING ZYMOMONAS	E. I. DU PONT DE NEMOURS AND COMPANY ,ALLIANCE FOR SUSTAINABLE ENERGY LLC	15/05/2009	DELHI

Publication Under Section 43(2) in Respect of the Grant

Following Patents have been granted and any person interested in opposing these patents under Section 25(2) may at any time within one year from the date of this issue, give notice to the Controller of Patents at the appropriate office, on the prescribed form-7 along with written statement and evidence, if any.

Serial Number	Patent Number	Application Number	Date of Application	Date of Priority	Title of Invention	Name of Patentee	Date of Publication of Abstract u/s 11(A)	Appropriate Office
1	270392	1449/MUM/2009	17/06/2009 13:56:41	31/07/2008	TRIGGER MEDIATION SYSTEM •	ACCENTURE GLOBAL SERVICES LIMITED	19/11/2010	MUMBAI
2	270393	1875/MUMNP/2011	10/03/2009	10/03/2009	A PROCESS FOR PREPARING TRIACETYL-3 HYDROXYPHENYLADENOSINE	INSTITUTE OF MATARIA MEDICA CHINESE ACADEMY OF MEDICAL SCIENCES	03/02/2012	MUMBAI
3	270394	601/MUMNP/2009	29/09/2006	29/09/2006	PROCESS FOR THE PREPARATION OF CHLOROMETHYL 2,2,2-TRIFLUORO-1-(TRIFLUOROMETHYL) ETHYL ETHER	CRISTALIA PRODUTOS QUIMICOS FARMACEUTICOS LTDA.	22/05/2009	MUMBAI
4	270430	473/MUM/2008	07/03/2008 15:31:48		PREPARATION OF NAPTHOQUINONE COMPOUNDS	ALKEM LABORATORIES LTD.	16/10/2009	MUMBAI
5	270435	2327/MUMNP/2009	07/07/2008	07/07/2007	METHOD AND SYSTEM FOR PROVIDING TARGETED INFORMATION USING PROFILE ATTRIBUTES WITH VARIABLE CONFIDENCE LEVELS IN A MOBILE ENVIRONMENT	QUALCOMM INCORPORATED	04/06/2010	MUMBAI
6	270436	362/MUMNP/2010	09/09/2008	13/09/2007	HIGH PERFORMANCE ARCHITECTURE FOR PROCESS TRANSMITTERS	ROSEMOUNT INC.	16/12/2011	MUMBAI

Publication Under Section 43(2) in Respect of the Grant

Following Patents have been granted and any person interested in opposing these patents under Section 25(2) may at any time within one year from the date of this issue, give notice to the Controller of Patents at the appropriate office, on the prescribed form-7 along with written statement and evidence, if any.

Serial Number	Patent Number	Application Number	Date of Application	Date of Priority	Title of Invention	Name of Patentee	Date of Publication of Abstract u/s 11(A)	Appropriate Office
1	270388	4075/KOLNP/2010	22/05/2009	27/05/2008	RECORDING INK COMPRISING A COLORANT DISPERSION	RICOH COMPANY, LTD.	25/11/2011	KOLKATA
2	270397	634/KOLNP/2008	10/08/2006	10/08/2005	METHOD OF PURIFYING CYTIDINE DIPHOSPHATE CHOLINE	KYOWA HAKKO BIO CO., LTD	14/11/2008	KOLKATA
3	270402	389/KOLNP/2009	30/07/2007	01/08/2006	LEAD SLAG REDUCTION	OUTOTEC OYJ	08/05/2009	KOLKATA
4	270404	1679/KOLNP/2009	10/11/2006	10/11/2006	WIRELESS COMMUNICATION SYSTEM AND WIRELESS TERMINAL DEVICE	FUJITSU LIMITED	12/06/2009	KOLKATA
5	270408	2372/KOLNP/2009	03/12/2007	06/12/2006	ALKYLAMIDOPROPYL DIALKYLAMINE SURFACTANTS AS ADJUVANTS	AKZO NOBEL N.V.	10/07/2009	KOLKATA
6	270410	1785/KOLNP/2009	09/11/2007	22/11/2006	AGROCHEMICAL FORMULATIONS COMPRISING AN OIL PHASE FREE OF PESTICIDES	BASF SE	12/06/2009	KOLKATA
7	270413	1691/KOL/2008	30/09/2008 16:18:56	04/10/2007	A METHOD OF CONTROLLING CHARGING OF AN ONBOARD ENERGY STORAGE SYSTEM IN A PLUG-IN-VEHICLE	GM GLOBAL TECHNOLOGY OPERATIONS, INC.	05/06/2009	KOLKATA
8	270423	2073/KOLNP/2007	24/11/2005	26/11/2004	AFFIXING AN ANCHOR IN A DRILLED HOLE.	PATENT APPLIED TECHNOLOGY	10/08/2007	KOLKATA
9	270424	1951/KOLNP/2009	07/11/2007	13/11/2006	METHOD AND SYSTEM FOR TRANSMITTING DHCP MESSAGE VIA PPP LINK AND FOR OBTAINING CONFIGURATION INFORMATION	HUAWEI TECHNOLOGIES CO., LTD.	19/06/2009	KOLKATA

10	270425	346/CAL/2001	22/06/2001		A METHOD OF MAKING A MONOLAYER ABRASIVE TOOL CONTAINING A MONOLAYER, CUBIC BORON NITRIDE (CBN) AND A CBN ABRASIVE TOOL THEREOF	DEPARTMENT OF SCIENCE & TECHNOLOGY,THE INDIAN INSTITUTE OF TECHNOLOGY	15/05/2015	KOLKATA
11	270426	1034/KOLNP/2008	19/09/2006	11/10/2005	METHOD AND APPARATUS FOR POWERING ELECTRONICS ASSOCIATED WITH A TELEPHONE LINE TWISTED PAIR	PHYLOGY, INC.	19/12/2008	KOLKATA
12	270427	4321/KOLNP/2010	20/05/2009	28/05/2008	PROPYLENE-HEXENE RANDOM COPOLYMER PRODUCED IN THE PRESENCE OF A ZIEGLER NATTA CATALYST	BOREALIS AG	14/01/2011	KOLKATA
13	270428	1388/KOL/2008	18/08/2008 17:02:09	11/09/2007	CONTROL ARCHITECTURE AND METHOD FOR ONE-DIMENSIONAL OPTIMIZATION OF INPUT TORQUE AND MOTOR TORQUE IN FIXED GEAR FOR A HYBRID POWERTRAIN SYSTEM	GM GLOBAL TECHNOLOGY OPERATIONS, INC.	01/05/2009	KOLKATA
14	270429	3016/KOLNP/2009	10/10/2008	10/10/2007	ENCODING METHOD AND APPARATUS FOR FRAME SYNCHRONIZATION SIGNAL	HUAWEI TECHNOLOGIES CO. LTD.	02/10/2009	KOLKATA
15	270431	1217/KOLNP/2009	04/10/2007	19/10/2006	SECURITY ELEMENT HAVING TWO STACKED LAYERS COMPOSED OF CHOLESTERIC LIQUID CRYSTAL MATERIAL AND METHOD FOR MANUFACTURING THE SAME	GIESECKE & DEVRIENT GMBH	22/05/2009	KOLKATA
16	270437	4250/KOLNP/2010	08/04/2009	23/05/2008	NON-AQUEOUS PIGMENT INK	RISO KAGAKU CORPORATION	07/01/2011	KOLKATA

CONTINUED TO PART- 2

CONTINUED FROM PART- 1

INTRODUCTION

In view of the recent amendment made in the Designs (Amendment) Rules, 2008 with effect from 17/06/2008, Publication of the matter relating to Designs is being published in the Official Journal of The Patent Office. This Journal is being published on weekly basis on every Friday covering the various proceedings on Designs as required according to the provisions of under Rule 22, 25, 27 and 39 of the Design (Amendment) Rules, 2008. All the enquiries on this Official Journal and other information as required by the public should be addressed to the Controller General of Patents, Designs & Trade Marks. Suggestions and comments are requested from all quarters so that the content can be enriched.

THE DESIGNS ACT 2000
SECTION 30
DESIGN ASSIGNMENT

The Design stands in the name of LUMIDIGM, INC. registered under the Designs Act, 2000 has been assigned in the Register of Designs in the name as follows:-

Design No.	Class	Name
270387	14-02	HID GLOBAL CORPORATION, A CORPORATION ORGANIZED AND EXISTING UNDER THE LAWS OF THE STATE OF DELAWARE, U.S.A., OF 611 CENTER RIDGE DRIVE, AUSTIN, TEXAS 78753, UNITED STATES OF AMERICA

CANCELLATION PROCEEDINGS
under Section 19 of the Designs Act, 2000 &
Designs (Amendment) Rules, 2008

(01)

"**Artiben Subhashbhai Panchal**, an Indian national, sole proprietor of Atlas Plastic,having it office at 22, Madhuram Complex, Near Keshavnagar, Subhasbridge, Ahmedabad - 380027 has filed a petition **(Petition No.Can/013/2015)** on 30/3/2015 for cancellation of registration of registered Design No. **258679** dated 12/12/2013 under class 08-07 titled as 'Seal' in the name of **Mr. Shailendra Patni,** Indian national of C/202 Yamnotri, Mahavir Nagar, Dhanukarwadi, Maharashtra, Mumbai - 400067."

(02)

"**Artiben Subhashbhai Panchal**, an Indian national, sole proprietor of Atlas Plastic,having it office at 22, Madhuram Complex, Near Keshavnagar, Subhasbridge, Ahmedabad - 380027 has filed a petition **(Petition No.Can/014/2015)** on 30/3/2015 for cancellation of registration of registered Design No. **258943** dated 24/12/2013 under class 08-07 titled as 'Seal' in the name of **Mr. Shailendra Patni,** Indian national of C/202 Yamnotri, Mahavir Nagar, Dhanukarwadi, Maharashtra, Mumbai - 400067."

(03)

"**Sanjay Jain** trading as **M/s. Poma-ex Product**, 78-A, Old Gupta Colony, Delhi – 110 009 has filed a petition **(Petition No. Can/064/2015)** on 07/12/2015 for cancellation of registration of registered Design No. **261490** dated 02/04/2014 under class 09-05 titled as 'Tube For Adhesive' in the name of **Fixwell Industries,** 167, Arihant Nagar Jain Colony, Punjabi Bagh West, Near Madipur Metro Station, New Delhi – 110026, India, An Indian proprietorship firm whose proprietor is Sh. Atul Jain, an Indian national of the above address."

(04)

"**Satyanarayan Engineering Works**, an Indian proprietorship concern of Baltikuri, Naskarpara, Howrah – 711113, West Bengal, india has filed a petition **(Petition No. Can/063/2015)** on 02/12/2015 for cancellation of registration of registered Design No. **265190** dated 27/8/2014 under class 15-03 titled as 'Rice Huller and Polisher Machine' in the name of **Umang Jindal,** D/65 Block D, New Alipore, Kolkata – 700 053, West Bengal, India, an Indian national."

REGISTRATION OF DESIGNS

The following designs have been registered. They are now open for public inspection. In the following each entry the Date of Registration is shown. The Priority Number, Priority Date and Priority Country are also shown

DESIGN NUMBER	272951
CLASS	09-05
1)FIXWELL INDUSTRIES, 167, ARIHANT NAGAR, JAIN COLONY, PUNJABI BAGH WEST, NEAR MADIPUR METRO STATION, NEW DELHI-110026, INDIA. (AN INDIAN PROPRIETORSHIP FIRM WHOSE PROPRIETOR IS :-SH. ATUL JAIN. AN INDIAN NATIONAL OF THE ABOVE ADDRESS	
DATE OF REGISTRATION	22/06/2015
TITLE	PACKAGING TUBE
PRIORITY NA	

DESIGN NUMBER	273078
CLASS	09-03
1)HISAMITSU PHARMACEUTICAL CO., INC., A COMPANY INCORPORATED UNDER THE LAW OF JAPAN, OF 408, TASHIRODAIKAN-MACHI, TOSU-SHI, SAGA 841-0017, JAPAN	
DATE OF REGISTRATION	25/06/2015
TITLE	PACKAGING BOX

PRIORITY

PRIORITY NUMBER	DATE	COUNTRY
2015-009105	22/04/2015	JAPAN

DESIGN NUMBER	272777
CLASS	15-05
1)SAMSUNG ELECTRONICS CO., LTD. 129, SAMSUNG-RO, YEONGTONG-GU, SUWON-SI, GYEONGGI-DO, 443-742, REPUBLIC OF KOREA, A COMPANY OF REPUBLIC OF KOREA	
DATE OF REGISTRATION	16/06/2015
TITLE	WASHING MACHINE

PRIORITY

PRIORITY NUMBER	DATE	COUNTRY
30-2014-0063064	24/12/2014	REPUBLIC OF KOREA

DESIGN NUMBER	274634
CLASS	24-02

1)MEDELA HOLDING AG,
LÄTTICHSTRASSE 4 B, 6340 BAAR, SWITZERLAND, A SWISS COMPANY

DATE OF REGISTRATION	19/08/2015
TITLE	BREASTSHIELD FOR A BREASTPUMP

PRIORITY

PRIORITY NUMBER	DATE	COUNTRY
874300501	20/02/2015	WIPO

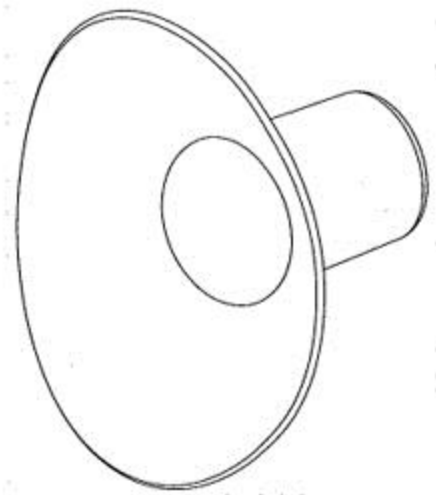

DESIGN NUMBER	270468
CLASS	15-07

1)PEPSICO, INC., INCORPORATED IN NORTH CAROLINA OF
700 ANDERSON HILL ROAD, PURCHASE, NEW YORK 10577, UNITED STATES OF AMERICA

DATE OF REGISTRATION	20/03/2015
TITLE	COOLER

PRIORITY NA

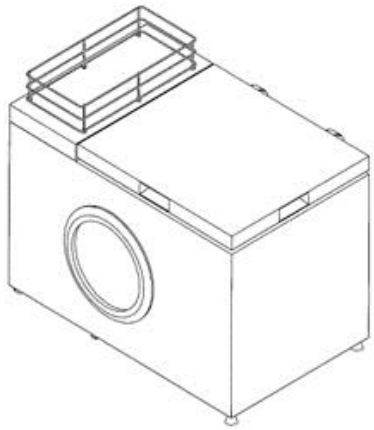

DESIGN NUMBER	271224
CLASS	10-02

1)HIMABINDU CHITTAJALLU,
WHOSE ADDRESS IS #41003, INDU FIELDS GARDENIA, NEAR HITECH RAILWAY STATION, KPHB PHASE IX, HYDERABAD-500072, TELANGANA, INDIA, WHOSE NATIONALITY IS INDIAN

DATE OF REGISTRATION	08/04/2015
TITLE	WATCH CASE

PRIORITY NA

DESIGN NUMBER	272280
CLASS	13-03

1)GENERAL ELECTRIC COMPANY,
AN ORGANIZATION REGISTERED UNDER THE LAWS OF UNITED STATES OF AMERICA, AND HAVING ITS OFFICE AT 1 RIVER ROAD, SCHENECTADY, NEW YORK 12345 UNITED STATES OF AMERICA

DATE OF REGISTRATION	21/05/2015
TITLE	BUSBAR

PRIORITY

PRIORITY NUMBER	DATE	COUNTRY
29/510294	26/11/2014	U.S.A.

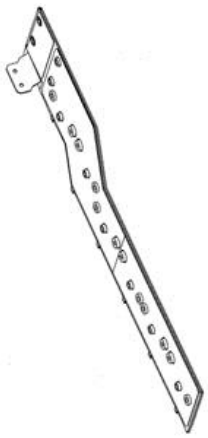

DESIGN NUMBER	273023
CLASS	05-05

1)SIDDHI VINAYAK KNOTS & PRINTS PVT. LTD. A COMPANY REGISTERED UNDER THE PROVISION OF COMPANIES ACT, 1956 HAVING ITS REGISTERED OFFICE AT
A-26, CENTRAL PARK, GIDC, PANDESARA, SURAT-394221 GUJARAT

DATE OF REGISTRATION	24/06/2015
TITLE	TEXTILE FABRIC

PRIORITY NA

DESIGN NUMBER	272695
CLASS	14-03

1)SAMSUNG ELECTRONICS CO., LTD.
129, SAMSUNG-RO, YEONGTONG-GU, SUWON-SI, GYEONGGI-DO, 443-742, REPUBLIC OF KOREA, A COMPANY OF REPUBLIC OF KOREA

DATE OF REGISTRATION	11/06/2015
TITLE	EARPHONE

PRIORITY

PRIORITY NUMBER	DATE	COUNTRY
30-2014-0063750	29/12/2014	REPUBLIC OF KOREA

DESIGN NUMBER	270652
CLASS	14-02
1)SITA INFORMATION NETWORKING COMPUTING CANADA INC., 770, SHERBROOKE WEST, SUITE 2300, MONTREAL, QUEBEC, H3A 1G1, CANADA	
DATE OF REGISTRATION	27/03/2015
TITLE	SELF SERVICE KIOSK FOR USE IN AIRPORTS AND THE LIKE

PRIORITY

PRIORITY NUMBER	DATE	COUNTRY
002548677-001	30/09/2014	OHIM

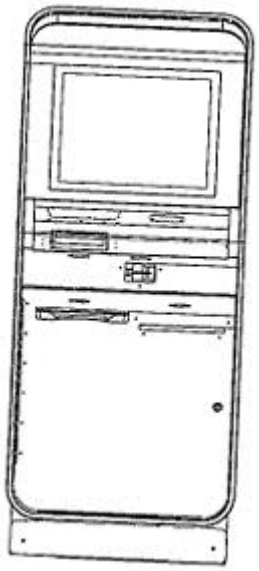

DESIGN NUMBER	270844
CLASS	12-16
1)R. N. GUPTA & COMPANY LIMITED, (AN INDIAN COMPANY INCORPORATED UNDER THE COMPANIES ACT, 1956), HAVING ITS OFFICE AT UNIT-II, GT ROAD, TEHSIL PAYAL, DORAHA-141421	
DATE OF REGISTRATION	01/04/2015
TITLE	FUEL TANK ASSEMBLY OF CRANE
PRIORITY NA	

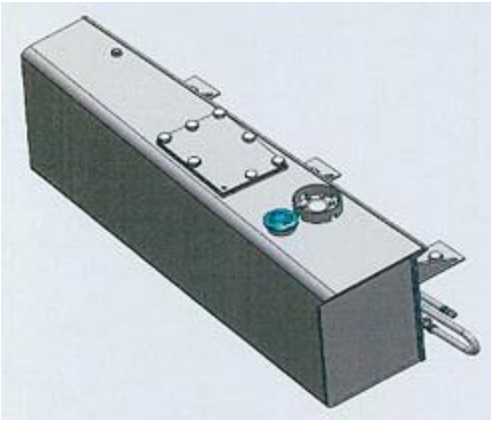

DESIGN NUMBER	272921
CLASS	06-03
1)MA DESIGN INDIA PRIVATE LIMITED, A COMPANY INCORPORATED IN INDIA HAVING ITS PRINCIPAL PLACE OF BUSINESS AT A-41, SECTOR-80, PHASE-II, NOIDA-201305, U.P. INDIA	
DATE OF REGISTRATION	22/06/2015
TITLE	TABLE
PRIORITY NA	

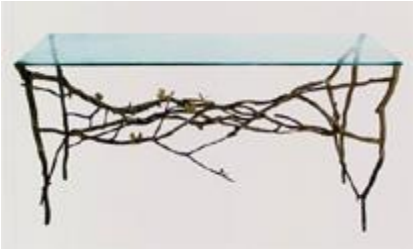

DESIGN NUMBER	272763
CLASS	31-00
1)USHA INTERNATIONAL LIMITED, AN INDIAN COMPANY INCORPORATED UNDER THE COMPANIES ACT, 1956 HAVING ITS REGISTERED OFFICE AT SURYA KIRAN BUILDING, 19 KASTURBA GANDHI MARG, NEW DELHI-110001, INDIA	
DATE OF REGISTRATION	16/06/2015
TITLE	MIXER GRINDER
PRIORITY NA	

DESIGN NUMBER	274627
CLASS	15-05
1)VIPUL GARG (INDIAN NATIONAL), 2551, (SATGHARA) DHARAM PURA, DARIBA, DELHI-110006	
DATE OF REGISTRATION	19/08/2015
TITLE	WEIGHT FOR IRONING MACHINES
PRIORITY NA	

DESIGN NUMBER	271303
CLASS	14-03
1)ROBERT BOSCH GMBH, A GERMAN COMPANY OF POSTFACH 30 02 20, 70442 STUTTGART, GERMANY	
DATE OF REGISTRATION	10/04/2015
TITLE	OBD (ON-BOARD DIAGNOSTICS) COMMUNICATION PLUG

PRIORITY

PRIORITY NUMBER	DATE	COUNTRY
002555235	10/10/2014	OHIM

DESIGN NUMBER	273114
CLASS	23-04
1)CROMPTON GREAVES LIMITED, CG HOUSE, 6TH FLOOR, DR. ANNIE BESANT ROAD, WORLI, MUMBAI - 400030, MAHARASHTRA, INDIA; AN INDIAN COMPANY	
DATE OF REGISTRATION	25/06/2015
TITLE	CEILING FAN
PRIORITY NA	

DESIGN NUMBER	265580
CLASS	21-99
1)INDIA FLOOR, (AN INDIAN COMPANY), HAVING ITS OFFICE AT AB/8 SAFDARJUNG ENCLAVE, IIIRD FLOOR, NEW DELHI-110029, INDIA	
DATE OF REGISTRATION	10/09/2014
TITLE	FASTENING PAD FOR SPORTS FLOORING
PRIORITY NA	

DESIGN NUMBER	272378
CLASS	13-03
1)CONA INDUSTRIES, 20/21, NIRAJ INDUSTRIAL ESTATE, OFF: MAHAKALI CAVES ROAD, ANDHERI EAST, MUMBAI-400093, MAHARASHTRA, INDIA, AN INDIAN SOLE PROPRIETORY FIRM, WHOSE PROPRIETOR IS PRAKASH NARAINDAS MOTWANI, AN INDIAN NATIONAL, RESIDENT OF GARDEN QUEEN, SANTACRUZ WEST, MUMBAI 400054, MAHARASHTRA, INDIA	
DATE OF REGISTRATION	27/05/2015
TITLE	ELECTRICAL HOLDER
PRIORITY NA	

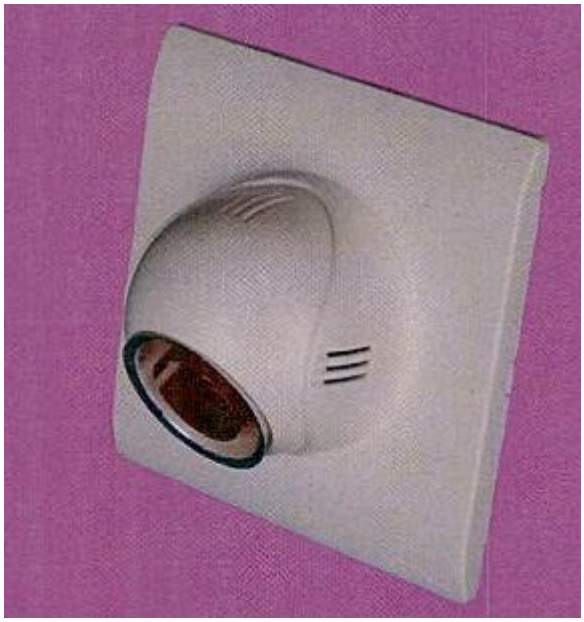

DESIGN NUMBER	272235
CLASS	11-01
1)PAWAN GOEL RAYA, A-1, CENTRAL MARKET, LAJPAT NAGAR-II, NEW DELHI-110024, INDIA, AN INDIAN NATIONAL, OF THE ABOVE ADDRESS	
DATE OF REGISTRATION	20/05/2015
TITLE	PENDANT
PRIORITY NA	

DESIGN NUMBER	273079
CLASS	09-03
1)HISAMITSU PHARMACEUTICAL CO., INC., A COMPANY INCORPORATED UNDER THE LAW OF JAPAN, OF 408, TASHIRODAIKAN-MACHI, TOSU-SHI, SAGA 841-0017, JAPAN	
DATE OF REGISTRATION	25/06/2015
TITLE	PACKAGING BOX

PRIORITY

PRIORITY NUMBER	DATE	COUNTRY
2015-009106	22/04/2015	JAPAN

DESIGN NUMBER	268696
CLASS	12-16
1)PRITESH NALINKUMAR PANCHAL, NATIONALITY INDIAN, ADDRESS AT 41, JAY SOMNATH SOCIETY, CIVIL HOSPITAL ROAD, NADIAD, DIST: KHEDA 387001, GUJARAT, INDIA	
DATE OF REGISTRATION	08/01/2015
TITLE	PROTECTIVE NUMBER PLATE COVER
PRIORITY NA	

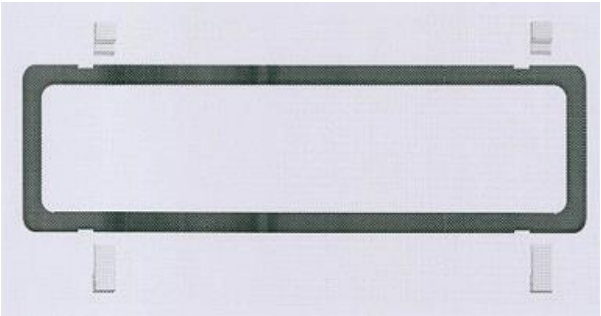

DESIGN NUMBER	271329
CLASS	12-16

1)FORD GLOBAL TECHNOLOGIES, LLC
A COMPANY ORGANIZED AND EXISTING UNDER THE LAWS OF UNITED STATES, HAVING ITS OFFICE AT SUITE 800, 330 TOWN CENTER DRIVE, DEARBORN, MICHIGAN 48126 UNITED STATES OF AMERICA

DATE OF REGISTRATION	11/04/2015
TITLE	WHEEL RIM OF A VEHICLE

PRIORITY

PRIORITY NUMBER	DATE	COUNTRY
402014100961.9	14/10/2014	GERMANY

DESIGN NUMBER	271988
CLASS	09-01

1)DAMYAA (P.J.) FOODS PVT. LTD (DULY INCORPORATED UNDER THE PROVISION OF THE COMPANY ACT, 1956)
AT VILLAGE CHIKNA, SHAHBAD ROAD, RAMPUR (U.P.), WHOSE DIRECTOR IS AMIT JAIN, OF THE ABOVE ADDRESS

DATE OF REGISTRATION	07/05/2015
TITLE	BOTTLE

PRIORITY NA

DESIGN NUMBER	272288
CLASS	21-01

1)ISRAR AHMED (INDIVIDUAL AND INDIAN NATIONAL), HAVING ITS REGISTERED OFFICE AT
PLOT NO. 389, PHASE-I, SHAZADA BAGH, DELHI-110035

DATE OF REGISTRATION	22/05/2015
TITLE	TOY TRUCK

PRIORITY NA

DESIGN NUMBER	272896
CLASS	11-01
1)GANJAM NAGAPPA & SON PVT LTD 63, PALACE ROAD, VASANTH NAGAR, BANGALORE, KARNATAKA, 560052, INDIA	
DATE OF REGISTRATION	20/06/2015
TITLE	NECKLACE
PRIORITY NA	

DESIGN NUMBER	273026
CLASS	05-05
1)SIDDHI VINAYAK KNOTS & PRINTS PVT. LTD. A COMPANY REGISTERED UNDER THE PROVISION OF COMPANIES ACT, 1956 HAVING ITS REGISTERED OFFICE AT A-26, CENTRAL PARK, GIDC, PANDESARA, SURAT-394221 GUJARAT	
DATE OF REGISTRATION	24/06/2015
TITLE	TEXTILE FABRIC
PRIORITY NA	

DESIGN NUMBER	226152
CLASS	08-06
1)SURAJ METAL PARSANA SOCIETY, NR. 73 SCHOOL, 50 FEET RAOD, RAJKOT. GUJARAT-INDIA.	
DATE OF REGISTRATION	08/12/2009
TITLE	HANDLE
PRIORITY NA	

DESIGN NUMBER	273305
CLASS	26-06
1)LUMAX INDUSTRIES LIMITED B-85-86, MAYAPURI INDUSTRIAL AREA, PHASE-I, DELHI – 110064, INDIA	
DATE OF REGISTRATION	01/07/2015
TITLE	FRONT LAMP FOR AUTOMOBILE
PRIORITY NA	

DESIGN NUMBER	270846
CLASS	12-05
1)R. N. GUPTA & COMPANY LIMITED, (AN INDIAN COMPANY INCORPORATED UNDER THE COMPANIES ACT, 1956), HAVING ITS OFFICE AT UNIT-II, GT ROAD, TEHSIL PAYAL, DORAHA-141421	
DATE OF REGISTRATION	01/04/2015
TITLE	CRANE
PRIORITY NA	

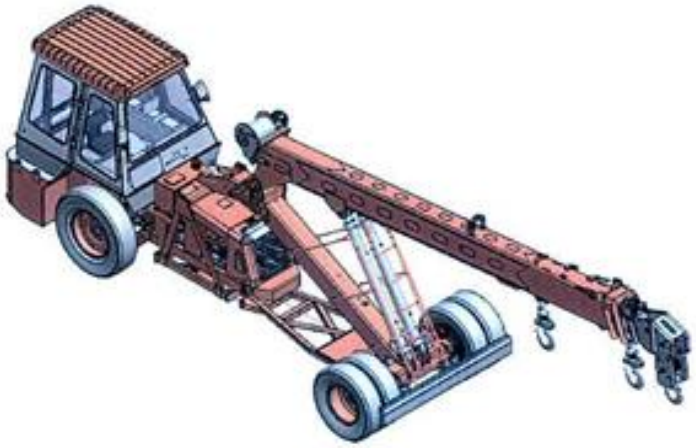

DESIGN NUMBER	272349
CLASS	19-02
1)TRODAT GMBH, (A CORPORATION ORGANIZED UNDER THE LAWS OF AUSTRIA), LINZER STRASSE 156, A-4600 WELS, AUSTRIA, NATIONALITY: AUSTRIA	
DATE OF REGISTRATION	26/05/2015
TITLE	STAMP
PRIORITY NA	

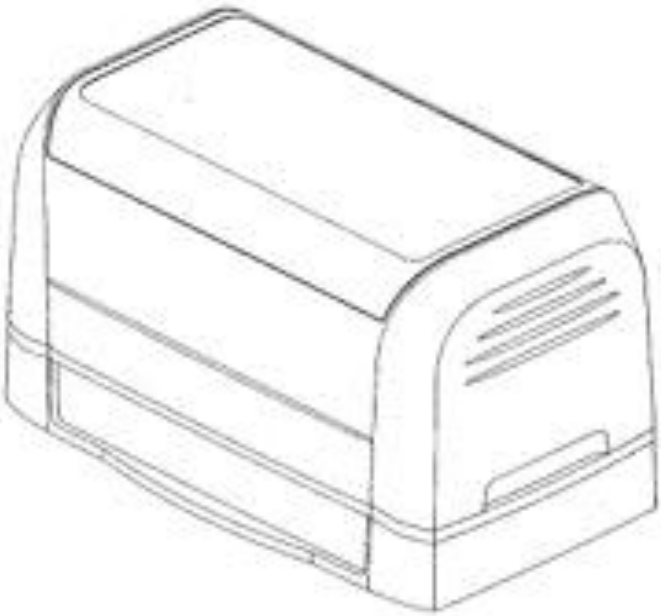

DESIGN NUMBER	273054
CLASS	12-08
1)TOYOTA JIDOSHA KABUSHIKI KAISHA, A JAPANESE CO., OF 1, TOYOTA-CHO, TOYOTA-SHI, AICHI-KEN, 471-8571, JAPAN	
DATE OF REGISTRATION	24/06/2015
TITLE	CAR

PRIORITY

PRIORITY NUMBER	DATE	COUNTRY
201510147	14/01/2015	AUSTRALIA

DESIGN NUMBER	272764
CLASS	13-03
1)ABB TECHNOLOGY AG, A PUBLIC COMPANY INCORPORATED UNDER THE LAWS OF SWITZERLAND, OF AFFOLTERNSTR. 44, 8050 ZÜRICH, SWITZERLAND	
DATE OF REGISTRATION	16/06/2015
TITLE	ELECTRICAL SWITCH

PRIORITY

PRIORITY NUMBER	DATE	COUNTRY
002598961-0001	16/12/2014	OHIM

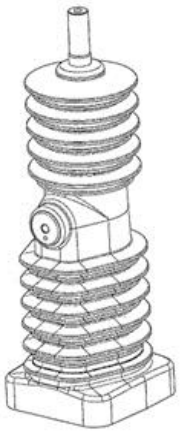

DESIGN NUMBER	274628
CLASS	07-05
1)VIPUL GARG (INDIAN NATIONAL), 2551, (SATGHARA) DHARAM PURA, DARIBA, DELHI-110006	
DATE OF REGISTRATION	19/08/2015
TITLE	SOLE PLATE FOR IRONING MACHINES

PRIORITY NA

DESIGN NUMBER	271308
CLASS	14-03

1)ROBERT BOSCH GMBH, A GERMAN COMPANY OF
POSTFACH 30 02 20, 70442 STUTTGART, GERMANY

DATE OF REGISTRATION	10/04/2015
TITLE	OBD (ON-BOARD DIAGNOSTICS) COMMUNICATION PLUG

PRIORITY

PRIORITY NUMBER	DATE	COUNTRY
002555235	10/10/2014	OHIM

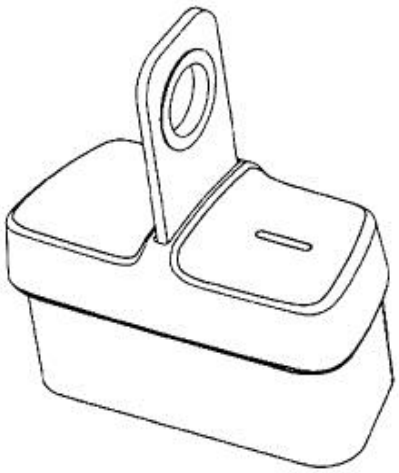

DESIGN NUMBER	271507
CLASS	06-07

1)ATTITUDE MAXIMUS (INDIA) PVT. LTD., A PRIVATE LIMITED COMPANY,
G-FLOOR, 3-6-892, STREET NO. 16, HIMAYATHNAGAR, HYDERABAD-500029, TELANGANA STATE, INDIA

DATE OF REGISTRATION	17/04/2015
TITLE	FRAME

PRIORITY NA

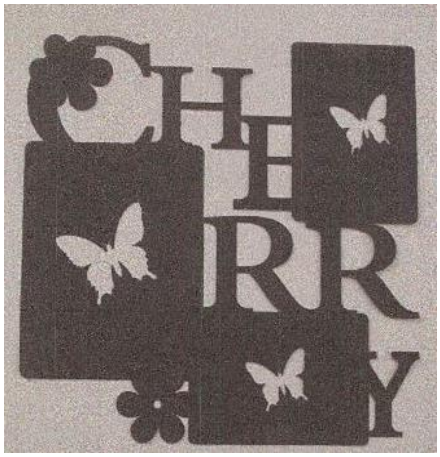

DESIGN NUMBER	273153
CLASS	14-03

1)GD MIDEA AIR-CONDITIONING EQUIPMENT CO., LTD.,
REFRIGERATION MAIN BUILDING, EAST AREA, MIDEA INDUSTRY TOWN, BEIJIAO, SHUNDE, FOSHAN, GUANGDONG 528311, PEOPLE'S REPUBLIC OF CHINA AND MIDEA GROUP CO., LTD., AT B26-28F, MIDEA HEADQUARTER BUILDING, NO. 6 MIDEA AVENUE, BEIJIAO, SHUNDE, FOSHAN, GUANGDONG 528311, PEOPLE'S REPUBLIC OF CHINA

DATE OF REGISTRATION	26/06/2015
TITLE	SIGNAL CONVERTER

PRIORITY

PRIORITY NUMBER	DATE	COUNTRY
201530137306.7	12/05/2015	CHINA

DESIGN NUMBER	272398
CLASS	23-02

1)(1) ASHOKBHAI P. DOSHI (2) CHANDRAKANTBHAI R. DOSHI (3) AMITBHAI C. DOSHI (4) MADHUBEN C. DOSHI (5) DIPAKBHAI I. SAVADIYA (6) ISHWARBHAI G. SAVADIYA (7) DHARMISHTHABEN H. SAVADIYA AND (8) ANITABEN S. SAVADIYA ALL INDIAN NATIONAL PARTNERS OF AMBUJA CERAMIC AN INDIAN PARTNERSHIP FIRM HAVING ITS PRINCIPAL PLACE OF BUSINESS AT ADDRESS:
P. B. NO. 52, TARNETAR BY PASS ROAD, NEAR G.I.D.C., THANGADH-363530, GUJARAT-INDIA

DATE OF REGISTRATION	27/05/2015
TITLE	GULLY TRAP

PRIORITY NA

DESIGN NUMBER	272874
CLASS	09-03

1)SAMSUNG ELECTRONICS CO., LTD.
129, SAMSUNG-RO, YEONGTONG-GU, SUWON-SI, GYEONGGI-DO, 443-742, REPUBLIC OF KOREA, A COMPANY OF REPUBLIC OF KOREA

DATE OF REGISTRATION	19/06/2015
TITLE	PACKAGING BOX

PRIORITY

PRIORITY NUMBER	DATE	COUNTRY
30-2015-0001077	09/01/2015	REPUBLIC OF KOREA

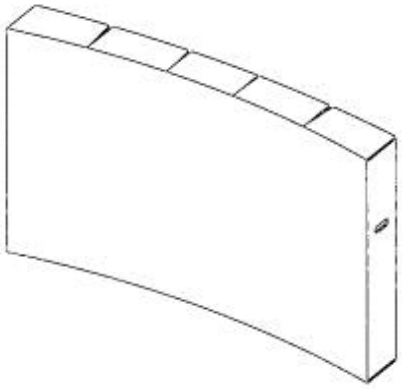

DESIGN NUMBER	272795
CLASS	12-16

1)DAIMLER AG, A CORPORATION ORGANIZED AND EXISTING UNDER THE LAWS OF GERMANY,
OF MERCEDESSTRASSE 137, D-70327, STUTTGART, GERMANY

DATE OF REGISTRATION	17/06/2015
TITLE	RADIATOR GRILLE FOR VEHICLES

PRIORITY

PRIORITY NUMBER	DATE	COUNTRY
002623785-0003	30/01/2015	OHIM

DESIGN NUMBER	271755
CLASS	15-99

1)VIVEK VERMA,
SPRAY ENGINEERING DEVICES LIMITED, SPRAY HOUSE, C-82, INDUSTRIAL AREA, PHASE-7, SAS NAGAR, MOHALI-160055, PUNJAB., AN INDIAN COMPANY, INCORPORATED UNDER THE PROVISIONS OF THE COMPANIES ACT, 1956, HAVING ITS REGISTERED OFFICE AT PLOT NO. 25, INDUSTRIAL AREA, PHASE-II, CHANDIGARH-160002 (U.T.), INDIA

DATE OF REGISTRATION	28/04/2015
TITLE	PLATE EVAPORATOR

PRIORITY NA

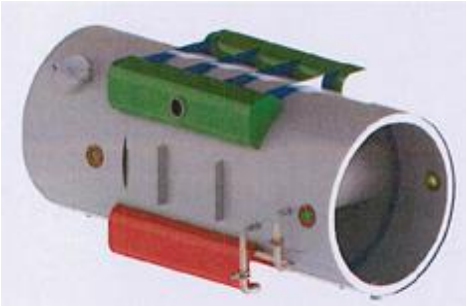

DESIGN NUMBER	271489
CLASS	07-02

1)LG ELECTRONICS INC.
128, YEOUI-DAERO, YEONGDEUNGPO-GU, SEOUL, KORA; NATIONALITY: REPUBLIC OF KOREA

DATE OF REGISTRATION	17/04/2015
TITLE	MICROWAVE OVEN

PRIORITY

PRIORITY NUMBER	DATE	COUNTRY
30-2014-0054715	13/11/2014	REPUBLIC OF KOREA

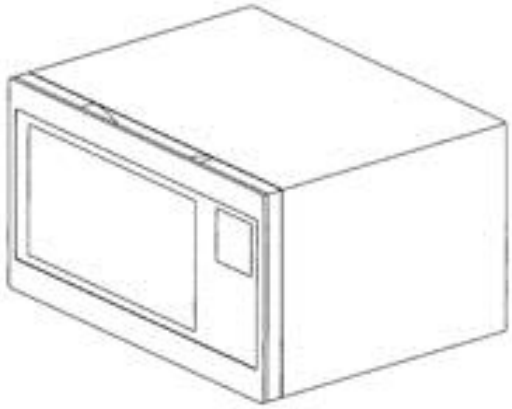

DESIGN NUMBER	273117
CLASS	23-04

1)CROMPTON GREAVES LIMITED,
CG HOUSE, 6TH FLOOR, DR. ANNIE BESANT ROAD, WORLI, MUMBAI - 400030, MAHARASHTRA, INDIA; AN INDIAN COMPANY

DATE OF REGISTRATION	25/06/2015
TITLE	WALL FAN

PRIORITY NA

DESIGN NUMBER	272380
CLASS	13-03

1)CONA INDUSTRIES,
20/21, NIRAJ INDUSTRIAL ESTATE, OFF: MAHAKALI CAVES ROAD, ANDHERI EAST, MUMBAI-400093, MAHARASHTRA, INDIA, AN INDIAN SOLE PROPRIETORY FIRM, WHOSE PROPRIETOR IS PRAKASH NARAINDAS MOTWANI, AN INDIAN NATIONAL, RESIDENT OF GARDEN QUEEN, SANTACRUZ WEST, MUMBAI 400054, MAHARASHTRA, INDIA

DATE OF REGISTRATION	27/05/2015
TITLE	ELECTRICAL PLUG-SOCKET (SET)

PRIORITY NA

DESIGN NUMBER	272254
CLASS	15-03

1)SATAKE CORPORATION, 7-2, SOTOKANDA 4-CHOME, CHIYODA-KU, TOKYO, 101-0021, JAPAN, A CORPORATION OF JAPAN, MECHANO TRANSFORMER CORPORATION, 3F., MIKASA FIRST BLDG., 1-10-10, KAJICHO, CHIYODA-KU, TOKYO 101-0044, JAPAN, NATIONALITY: JAPAN
AND KURODA PNEUMATICS LTD., 10243, KAMAKAZU, ASAHI-SHI, CHIBA 289-2505, JAPAN, NATIONALITY: JAPAN

DATE OF REGISTRATION	20/05/2015
TITLE	NOZZLE APPARATUS FOR USE IN COLOUR SORTING MACHINE FOR GRAINS

PRIORITY

PRIORITY NUMBER	DATE	COUNTRY
2014-026100	21/11/2014	JAPAN

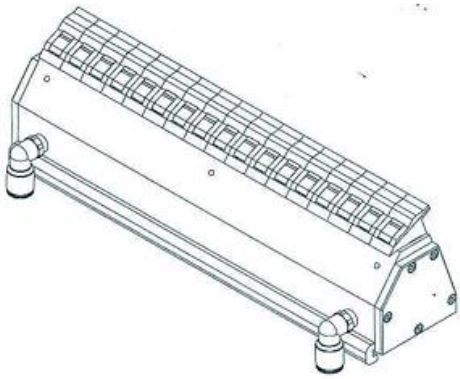

DESIGN NUMBER	275034
CLASS	02-04

1)EUPHORIC INNOVATIONS PRIVATE LIMITED, AN INDIAN COMPANY INCORPORATED UNDER THE COMPANIES ACT, 1956 HAVING REGISTERED OFFICE AT
DOOR NO. VII/313 H, NH 17, P.O. KOLATHARA, KOZHIKODE-673655, KERALA, INDIA REPRESENTED BY ITS DIRECTOR MR. VELUTHEDATH ABDUL RASHEED, INDIAN, S/O. MR. VELUTHEDATH KUNHALI, AGED 37 (THIRTY SEVEN) YEARS

DATE OF REGISTRATION	28/08/2015
TITLE	SOLE OF FOOTWEAR

PRIORITY NA

DESIGN NUMBER	274665
CLASS	09-01
1)DECATHLON, 4, BOULEVARD DE MONS, 59650, VILLENEUVE D'ASCQ, FRANCE, A COMPANY OF FRANCE	
DATE OF REGISTRATION	19/08/2015
TITLE	BOTTLE

PRIORITY

PRIORITY NUMBER	DATE	COUNTRY
002638858-0001	23/02/2015	OHIM

DESIGN NUMBER	270927
CLASS	09-03
1)HOLISOL LOGISTICS PRIVATE LIMITED, A COMPANY INCORPORATED UNDER THE INDIAN COMPANIES ACT, 1956, OF A1, CARIAPPA MARG, SAINIK FARM, KHANPUR, NEW DELHI, INDIA	
DATE OF REGISTRATION	01/04/2015
TITLE	FRAME FOR PACKAGING & TRASPORTATION

PRIORITY NA

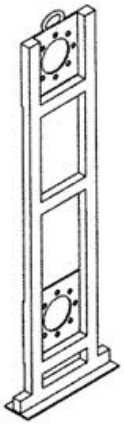

DESIGN NUMBER	272191
CLASS	11-01
1)PAWAN GOEL RAYA, A-1, CENTRAL MARKET, LAJPAT NAGAR-II, NEW DELHI-110024, INDIA, AN INDIAN NATIONAL, OF THE ABOVE ADDRESS	
DATE OF REGISTRATION	18/05/2015
TITLE	PENDANT

PRIORITY NA

DESIGN NUMBER	273070
CLASS	06-01
1)NATIONAL INSTITUTE OF DESIGN LOCATED AT PALDI, AHMEDABAD-380007, GUJARAT, HAVING NATIONALITY AS INDIAN	
DATE OF REGISTRATION	24/06/2015
TITLE	STOOL
PRIORITY NA	

DESIGN NUMBER	272773
CLASS	08-09
1)SPHINX ELECTRONICS GMBH & CO. KG, OF TULLASTRAßE 3-79341 KENZINGEN, GERMANY, A GERMAN COMPANY	
DATE OF REGISTRATION	16/06/2015
TITLE	FITTING FOR DOORS

PRIORITY

PRIORITY NUMBER	DATE	COUNTRY
002599548	17/12/2014	OHIM

DESIGN NUMBER	274632
CLASS	03-04
1)JEEWAN JOTE ELECTRICALS, 40, FOCAL POINT, AMRITSAR-143001, PUNJAB, INDIA (AN INDIAN PROPRIETORSHIP FIRM WHOSE PROPRIETOR IS:- SH. JEEWAN JOT SINGH AN INDIAN NATIONAL OF THE ABOVE ADDRESS	
DATE OF REGISTRATION	19/08/2015
TITLE	PEDESTAL FAN STAND
PRIORITY NA	

DESIGN NUMBER	270576
CLASS	31-00
1)ANRAJ BHANDARI NO. #795, 5TH MAIN ROAD, VIJAYANGAR, BENGALURU 560040, KARNATAKA, INDIA	
DATE OF REGISTRATION	25/03/2015
TITLE	BASE OF MIXER GRINDER
PRIORITY NA	

DESIGN NUMBER	271199
CLASS	12-16
1)HERO MOTOCORP LIMITED, AN INDIAN COMPANY INCORPORATED UNDER THE INDIAN COMPANIES ACT, HAVING ITS OFFICE AT 34, COMMUNITY CENTRE, BASANT LOK, VASANT VIHAR, NEW DELHI-110057	
DATE OF REGISTRATION	07/04/2015
TITLE	FENDER FOR MOTORCYCLE
PRIORITY NA	

DESIGN NUMBER	271907
CLASS	15-03
1)D. JAYAVIJAYAN, SOUTHERN AGRO ENGINE PRIVATE LTD., 24A, III PHASE, INDUSTRIAL ESTATE, GUINDY, CHENNAI 600032, AN INDIAN NATIONAL	
DATE OF REGISTRATION	06/05/2015
TITLE	WEED REMOVER
PRIORITY NA	

DESIGN NUMBER	273218
CLASS	28-03
1)RAHUL CHOPRA 18 SATHANAKVASI JAIN SOCIETY NR NARANPURA, RAILWAY CROSSING ASHRAM ROAD USMANPURA, AHMEDABAD, 380013, INDIAN	
DATE OF REGISTRATION	30/06/2015
TITLE	FOOT MASSAGER
PRIORITY NA	

DESIGN NUMBER	272454
CLASS	07-01
1)HNH HOTELWARES, 49/1, RAMA ROAD, INDUSTRIAL AREA, NEW DELHI-110015 (INDIA), (AN INDIAN PARTNERSHIP FIRM), WHOSE PARTNERS ARE ARJUN KAPOOR & SANTOSH KAPOOR, BOTH INDIAN NATIONALS AND AT THE SAME ABOVE ADDRESS	
DATE OF REGISTRATION	02/06/2015
TITLE	DISH SERVING BOWL
PRIORITY NA	

DESIGN NUMBER	272277
CLASS	13-03
1)GENERAL ELECTRIC COMPANY, 1 RIVER ROAD, SCHENECTADY, NEW YORK 12345 UNITED STATES OF AMCEICA	
DATE OF REGISTRATION	21/05/2015
TITLE	BUSBAR

PRIORITY

PRIORITY NUMBER	DATE	COUNTRY
29/510264	26/11/2014	U.S.A.

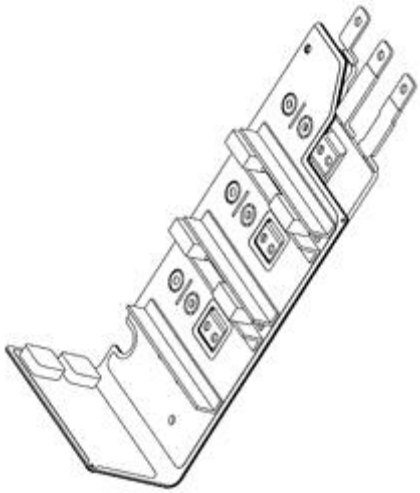

DESIGN NUMBER	272886
CLASS	24-04
1)GLENMARK PHARMACEUTICALS LIMITED GLENMARK HOUSE, HDO-CORPORATE BLDG, WING A, B. D. SAWANT MARG, CHAKALA, ANDHERI (EAST), MUMBAI 400099, STATE OF MAHARASHTRA, INDIA	
DATE OF REGISTRATION	19/06/2015
TITLE	INHALATION SPACER
PRIORITY NA	

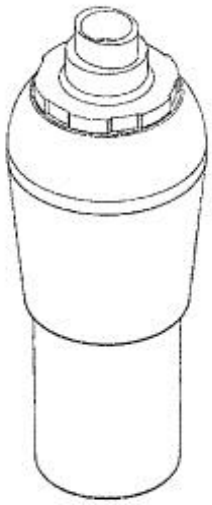

DESIGN NUMBER	272810
CLASS	08-09
1)FORMATIVE ENGINEERING PVT. LTD. INDUSTRIAL AREA-C, SUA ROAD, DHANDARI KALAN, LUDHIANA-141010 (PUNJAB) INDIA (AN INDIAN COMPANY DULY REGISTERED UNDER THE COMPANIES ACT, 1956) OF THE ABOVE ADDRESS	
DATE OF REGISTRATION	17/06/2015
TITLE	RAIL-HEAD FOR GATES & GRILLS
PRIORITY NA	

DESIGN NUMBER	270508
CLASS	07-04
1)DART INDUSTRIES INC. A COMPANY INCORPORATED UNDER THE LAWS OF THE U.S.A. HAVING ITS REGISTERED OFFICE AT 14901 S. ORANGE BLOSSOM TRAIL ORLANDO, FLORIDA 32837, U.S.A.	
DATE OF REGISTRATION	23/03/2015
TITLE	MASHER

PRIORITY

PRIORITY NUMBER	DATE	COUNTRY
29/504,783	29/10/2014	U.S.A.

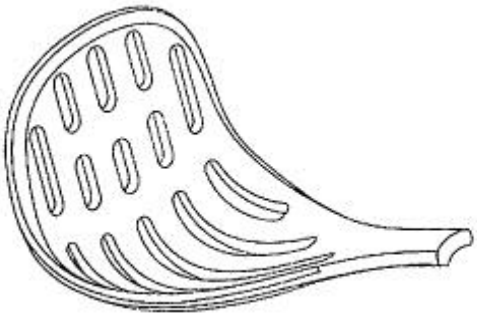

DESIGN NUMBER	271324
CLASS	12-16

1)FORD GLOBAL TECHNOLOGIES, LLC
SUITE 800, 330 TOWN CENTER DRIVE, DEARBORN, MICHIGAN 48126 UNITED STATES OF AMERICA

DATE OF REGISTRATION	11/04/2015
TITLE	FRONT LOWER BUMPER COVER FOR VEHICLE

PRIORITY

PRIORITY NUMBER	DATE	COUNTRY
402014100961.9	14/10/2014	GERMANY

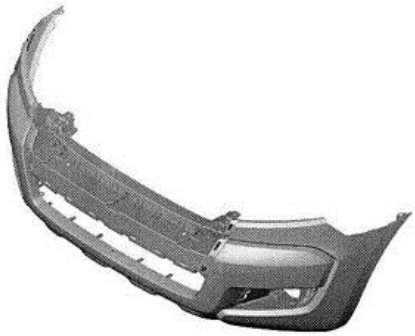

DESIGN NUMBER	271984
CLASS	10-02

1)LUXURY GOODS INTERNATIONAL (L.G.I.) SA, A LIMITED COMPANY INCORPORATED UNDER THE LAWS OF SWITZERLAND OF
CH. DES ROCHETTES 2, 2016 CORTAILLOD, SWITZERLAND

DATE OF REGISTRATION	07/05/2015
TITLE	WRISTWATCH

PRIORITY

PRIORITY NUMBER	DATE	COUNTRY
141173	05/01/2015	SWITZERLAND

DESIGN NUMBER	272281
CLASS	13-03

1)GENERAL ELECTRIC COMPANY,
AN ORGANIZATION REGISTERED UNDER THE LAWS OF UNITED STATES OF AMERICA, AND HAVING ITS OFFICE AT 1 RIVER ROAD, SCHENECTADY, NEW YOUK 12345 UNITED STATES OF AMERICA

DATE OF REGISTRATION	21/05/2015
TITLE	BUSBAR

PRIORITY

PRIORITY NUMBER	DATE	COUNTRY
29/510,169	25/11/2014	U.S.A.

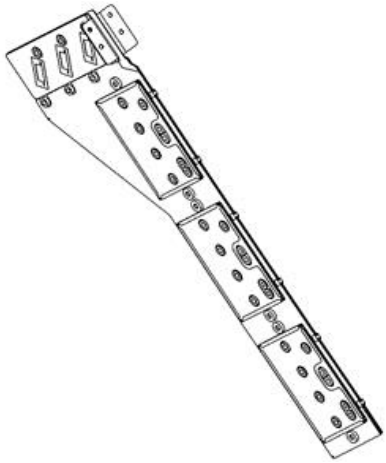

DESIGN NUMBER	272848
CLASS	09-03

1)RIZOL PETRO PRODUCTS PVT LTD (A COMPANY DULY ORGANIZED AND EXISTING UNDER THE INDIAN COMPANIES ACT, 1956), OF THE ADDRESS
J-2/15A, IIND FLOOR, B.K. DUTTA MARKET, RAJOURI GARDEN, NEW DELHI-110027, INDIA

DATE OF REGISTRATION	18/06/2015
TITLE	CONTAINER

PRIORITY NA

DESIGN NUMBER	252588
CLASS	19-02

1)KANIN INDIA, B-XXX-6754, FOCAL POINT, LUDHIANA-141010, PUNJAB, INDIA, AN INDIAN PARTNERSHIP FIRM, WHOSE PARTNERS ARE ARIHANT JAIN, VISHWA JAIN, MS. NEELAM JAIN, MR. AMBRISH JAIN, MR. GAUTAM JAIN, AND MR. AMIT JAIN (ALL INDIAN NATIONALS) HAVING THEIR ADDRESS OF
B-XXX-6754, FOCAL POINT, LUDHIANA-141010, PUNJAB INDIA

DATE OF REGISTRATION	21/03/2013
TITLE	STAPLER

PRIORITY

PRIORITY NUMBER	DATE	COUNTRY
002183202	13/02/2013	OHIM

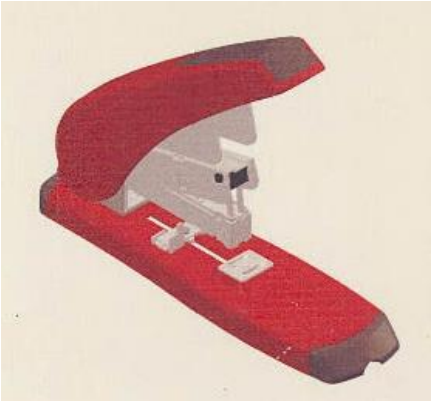

DESIGN NUMBER	274263
CLASS	15-09

1)RINCO HOLDING AG,
OF INDUSTRIESTRASSE 4, CH-8590 ROMANSHORN, SWITZERLAND

DATE OF REGISTRATION	07/08/2015
TITLE	WELDING MACHINE

PRIORITY

PRIORITY NUMBER	DATE	COUNTRY
DM/086603	02/06/2015	WIPO

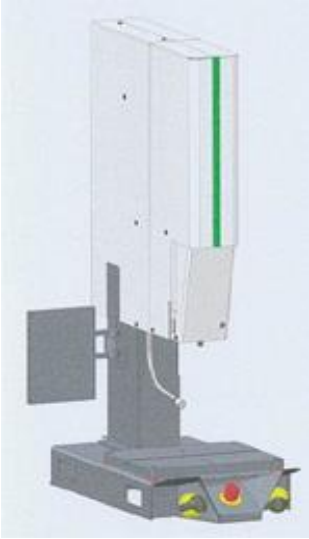

DESIGN NUMBER	274553
CLASS	05-05
1)SIDDHI VINAYAK KNOTS & PRINTS PVT. LTD. A COMPANY REGISTERED UNDER THE PROVISION OF COMPANIES ACT, 1956 HAVING ITS REGISTERED OFFICE AT A-26, CENTRAL PARK, GIDC, PANDESARA, SURAT-394221 GUJARAT	
DATE OF REGISTRATION	17/08/2015
TITLE	TEXTILE FABRIC
PRIORITY NA	

DESIGN NUMBER	270124
CLASS	25-01
1) S. SANJAI INDIAN NATIONALS, HAVING OUR OFFICE AT NO. 2, SELECTION APARTMENTS, PANDIYAN STREET, RAJIV GANDHI NAGAR, THATANKUPPAM, VILLIVAKKAM, CHENNAI 600049, TAMIL NADU, INDIA	
DATE OF REGISTRATION	04/03/2015
TITLE	KERB STONE FOR CONSTRUCTION
PRIORITY NA	

DESIGN NUMBER	271320
CLASS	09-01
1)TILAKNAGAR INDUSTRIES LTD., A COMPANY INCORPORATED UNDER THE COMPANIES ACT, 1956, HAVING ITS OFFICE AT INDUSTRIAL ASSURANCE BUILDING, 3RD FLOOR, CHURCHGATE, MUMBAI 400020, STATE OF MAHARASHTRA, INDIA	
DATE OF REGISTRATION	10/04/2015
TITLE	BOTTLE
PRIORITY NA	

DESIGN NUMBER	271887
CLASS	23-01
1)KALPESH K. PATEL, AN INDIAN NATIONAL SOLE PROPRIETOR OF GLOBAL INDUSTRIES AN INDIAN PROPRIETORSHIP FIRM HAVING ITS PRINCIPAL PLACE OF BUSINESS AT ADDRESS: SURVEY NO. 184/13 (64), PANCHAL UDYOG NAGAR, VILLAGE: BHIMPORE, NANI DAMAN, DIST. DAMAN, INDIA	
DATE OF REGISTRATION	05/05/2015
TITLE	CABINET FOR WATER FILTER
PRIORITY NA	

DESIGN NUMBER	272800
CLASS	12-16
1)DAIMLER AG, A CORPORATION ORGANIZED AND EXISTING UNDER THE LAWS OF GERMANY, OF MERCEDESSTRASSE 137, D-70327, STUTTGART, GERMANY	
DATE OF REGISTRATION	17/06/2015
TITLE	RADIATOR GRILLE FOR VEHICLES

PRIORITY

PRIORITY NUMBER	DATE	COUNTRY
002623785-0008	30/01/2015	OHIM

DESIGN NUMBER	270807
CLASS	13-03
1)AL-AZIZ PLASTICS PVT. LTD. (A COMPANY REGISTERED UNDER COMPANIES ACT 1956) WHOSE ADDRESS 125, AMAR INDL. ESTATE, A. K. ROAD, SAKINAKA, ANDHERI-(E), MUMBAI-400052	
DATE OF REGISTRATION	31/03/2015
TITLE	SWITCH BOARD
PRIORITY NA	

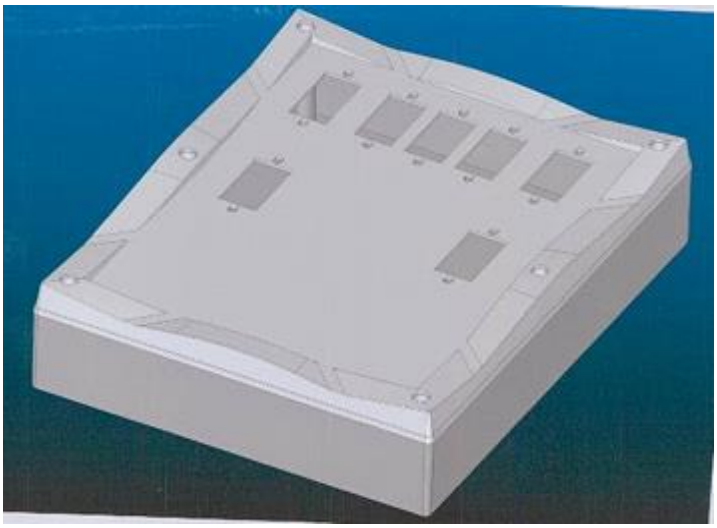

DESIGN NUMBER	271385
CLASS	07-01
1)BAJAJ EQUIPMENTS LTD. A-97/6, WAZIRPUR INDUSTRIAL AREAS, NEW DELHI-110052, INDIA	
DATE OF REGISTRATION	15/04/2015
TITLE	CHAFING DISH
PRIORITY NA	

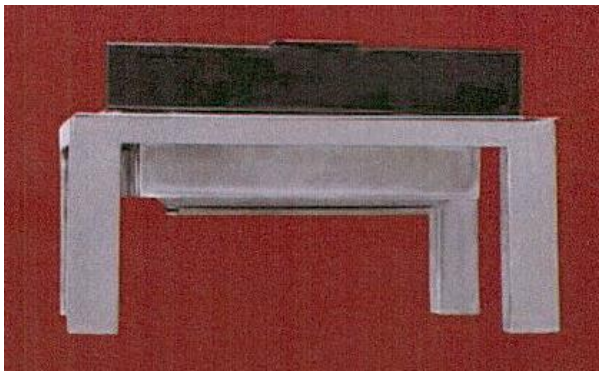

DESIGN NUMBER	272912
CLASS	07-01
1)MA DESIGN INDIA PRIVATE LIMITED, A COMPANY INCORPORATED IN INDIA HAVING ITS PRINCIPAL PLACE OF BUSINESS AT A-41, SECTOR-80, PHASE-II, NOIDA-201305, U.P. INDIA	
DATE OF REGISTRATION	22/06/2015
TITLE	BOWL
PRIORITY NA	

DESIGN NUMBER	226250
CLASS	24-02
1)DAYANAND KISHORE M. SHARMA B/12, 13 VRAJDARSAN SOCIETY, NEAR HDFC ATM, OPP. BAPOD TALAV, WAGHODIA RAOD, VADODARA-19, GUJARAT-INDIA.	
DATE OF REGISTRATION	16/12/2009
TITLE	SURGICAL EQUIPMENT
PRIORITY NA	

DESIGN NUMBER	274618
CLASS	24-01

1)TULIP DIAGNOSTICS [P] LIMITED-A COMPANY INCORPORATED UNDER THE COMPANIES ACT, 1956 AND HAVING REGISTERED OFFICE SITUATED AT

GITANJALI, DR. ANTONIO DO REGO BAGH, ALTO SANTACRUZ, BAMBOLIM, GOA 403202 INDIA - WHOSE DIRECTORS ARE 1) DEEPAK GURUSHANKAR TRIPATHI, INDIAN NATIONAL, RESIDING AT SHAGUN, VILLA NO. 14, KAMAT KINARA, MIRAMAR 403001 GOA, INDIA; 2) NATRAJAN SRIRAM, INDIAN NATIONAL, RESIDING AT 13, SAGAR CHS, DONA PAULA, PANAJI 403004 GOA, INDIA AND 3) DR. VINAYAK K. NAIK, PANKASH, LA CAMPALA CHS, MIRAMAR 403001 GOA, INDIA

DATE OF REGISTRATION	19/08/2015
TITLE	VEIN FINDER

PRIORITY NA

DESIGN NUMBER	270128
CLASS	13-02

1)WORLD PANEL, INC., A CORPORATION ORGANIZED AND EXISTING UNDER THE LAWS OF THE STATE OF DELAWARE, UNITED STATES OF AMERICA, HAVING A PLACE OF BUSINESS AT

300 CENTER DRIVE, G-278, BOULDER, CO 80027, UNITED STATES OF AMERICA

DATE OF REGISTRATION	04/03/2015
TITLE	PORTABLE SOLAR PANEL CHARGER

PRIORITY

PRIORITY NUMBER	DATE	COUNTRY
29/501,403	04/09/2014	U.S.A.

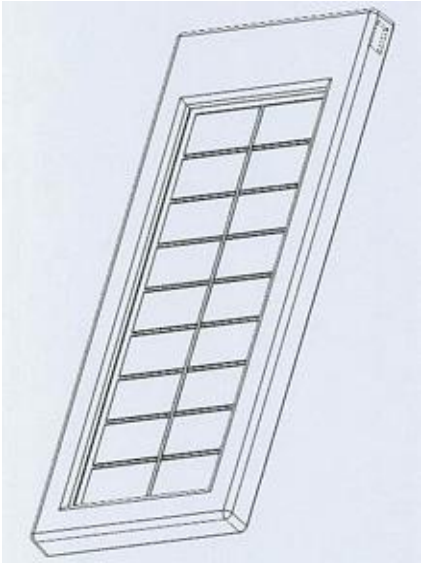

DESIGN NUMBER	271322
CLASS	12-08

1)FORD GLOBAL TECHNOLOGIES, LLC

A COMPANY ORGANIZED AND EXISTING UNDER THE LAWS OF UNITED STATES, HAVING ITS OFFICE AT SUITE 800, 330 TOWN CENTER DRIVE, DEARBORN, MICHIGAN 48126 UNITED STATES OF AMERICA

DATE OF REGISTRATION	11/04/2015
TITLE	VEHICLE

PRIORITY

PRIORITY NUMBER	DATE	COUNTRY
402014100961.9	14/10/2014	GERMANY

DESIGN NUMBER	271889
CLASS	06-08

1)KIRITBHAI SHANTILAL SHAH AN INDIAN NATIONAL HAVING HIS PRINCIPAL PLACE OF BUSINESS AT
8, PARMESHWAR SOCIETY, PARMESHWAR CHOWK, DHEBAR ROAD (SOUTH), ATIKA, RAJKOT-360 002, GUJARAT-INDIA.

DATE OF REGISTRATION	05/05/2015
TITLE	CLOTHES HANGER

PRIORITY NA

DESIGN NUMBER	272275
CLASS	13-03

1)GENERAL ELECTRIC COMPANY,
AN ORGANIZATION REGISTERED UNDER THE LAWS OF UNITED STATES OF AMERICA, AND HAVING ITS OFFICE AT 1 RIVER ROAD, SCHENECTADY, NEW YORK 12345 UNITED STATES OF AMERICA

DATE OF REGISTRATION	21/05/2015
TITLE	BUSBAR

PRIORITY

PRIORITY NUMBER	DATE	COUNTRY
29/510,003	24/11/2014	U.S.A.

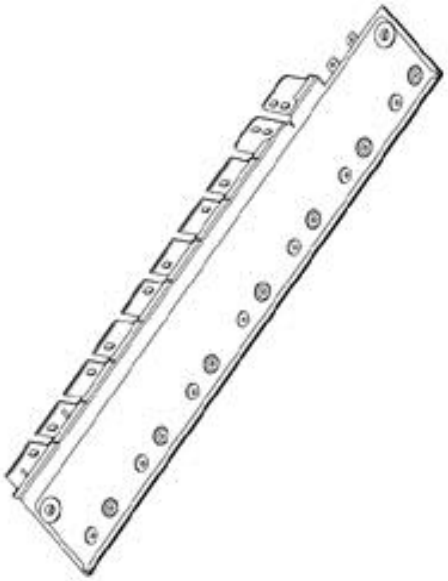

DESIGN NUMBER	272802
CLASS	12-16

1)DAIMLER AG, A CORPORATION ORGANIZED AND EXISTING UNDER THE LAWS OF GERMANY,
OF MERCEDESSTRASSE 137, D-70327, STUTTGART, GERMANY

DATE OF REGISTRATION	17/06/2015
TITLE	PANEL FOR CABIN OF A VEHICLE

PRIORITY

PRIORITY NUMBER	DATE	COUNTRY
002623785-0010	30/01/2015	OHIM

DESIGN NUMBER	270256
CLASS	23-01
1)MR. ANIL MANOHAR VASUDEO IS AN INDIAN (NATIONALITY) HAVING ADDRESS AT HO. NO.: 3910, SHRIKRUSHNA NAGAR, TARDAL, ICHALKARANJI-416115, TAL-HATKANAGLE, DIST-KOLHAPUR, MAHARASHTRA, INDIA.	
DATE OF REGISTRATION	11/03/2015
TITLE	GAS SAVER
PRIORITY NA	

DESIGN NUMBER	270527
CLASS	09-03
1)BHAVESH SHETH, DIRECTOR OF PLASTECH INTERNATIONAL PVT. LTD., HAVING HIS OFFICE AT 212/3, ASHIRWAD ESTATE, RAM MANDIR ROAD, GOREGAON (WEST), MUMBAI-400104, MAHARASHTRA, INDIA	
DATE OF REGISTRATION	24/03/2015
TITLE	CAN
PRIORITY NA	

DESIGN NUMBER	262796
CLASS	04-02
1)SHREE SIMANDHAR INDUSTRIES IS A PROPRIETORSHIP FIRM OF 21, NEW MANU BHUVAN, BHAGAT SINGH ROAD, VILE PARLE (W) MUMBAI-400056, MAHARASHTRA, INDIA	
DATE OF REGISTRATION	22/05/2014
TITLE	TOOTH BRUSH
PRIORITY NA	

DESIGN NUMBER	271607
CLASS	12-13
1)TIRTH HYGIENE TECHNOLOGY PVT LTD, A COMPANY INCORPORATED UNDER THE INDIAN COMPANIES ACT, HAVING ITS REGISTERED OFFICE AT C/O UTSAV FOOD PRODUCTS, SR. NO 141, NEAR PIJ CROSSING, BEHIND SHARPIN, PIJ RAOD, AT: TUNDEL, TAL: NADIAD, DIST:KHEDA, 387230, GUJARAT, INDIA	
DATE OF REGISTRATION	22/04/2015
TITLE	AUTOMOTIVE INDUSTRIAL SWEEPER FOR CLEANING
PRIORITY NA	

DESIGN NUMBER	272297
CLASS	08-06
1)ITALIK METALWARE PVT. LTD., G: 212-215, LODHIKA, G.I.D.C., KALAWAD ROAD, METODA, RAJKOT-360003, STATE OF GUJARAT INDIA, / A PRIVATE LIMITED COMPANY INCORPORATED UNDER INDIAN COMPANIES ACT., ABOVE ADDRESS	
DATE OF REGISTRATION	22/05/2015
TITLE	HANDLE
PRIORITY NA	

DESIGN NUMBER	273032
CLASS	05-05
1)SIDDHI VINAYAK KNOTS & PRINTS PVT. LTD. A COMPANY REGISTERED UNDER THE PROVISION OF COMPANIES ACT, 1956 HAVING ITS REGISTERED OFFICE AT A-26, CENTRAL PARK, GIDC, PANDESARA, SURAT-394221 GUJARAT	
DATE OF REGISTRATION	24/06/2015
TITLE	TEXTILE FABRIC
PRIORITY NA	

DESIGN NUMBER	274295
CLASS	03-01
1)PUNAM PRIYADARSHANI (AN INDIAN NATIONAL), B-144, SECOND FLOOR, DUGGAL COLONY, KHANPUR, DELHI-110062	
DATE OF REGISTRATION	07/08/2015
TITLE	FLUTE CASE
PRIORITY NA	

DESIGN NUMBER	274487
CLASS	21-03
1)FASTER CRICKET BOWLING MACHINE, PEETAL NAGRI, KACHCHI BASTI, BAKERY WALI GALI, MOORADABAD, U.P., INDIA (AN INDIAN PROPRIETORSHIP FIRM WHOSE PROPRIETOR IS:- NUSRAT ALI, AN INDIAN NATIONAL OF THE ABOVE ADDRESS	
DATE OF REGISTRATION	14/08/2015
TITLE	FASTER CRICKET BOWLING MACHINE
PRIORITY NA	

DESIGN NUMBER	226197
CLASS	08-05
1)3M INNOVATIVE PROPERTIES COMPANY 3M CENTER, SAINT PAUL, MINNESOTA 55133-3427, U.S.A.	
DATE OF REGISTRATION	11/12/2009
TITLE	STEM FOR A POWER TOOL ATTACHMENT
PRIORITY NA	

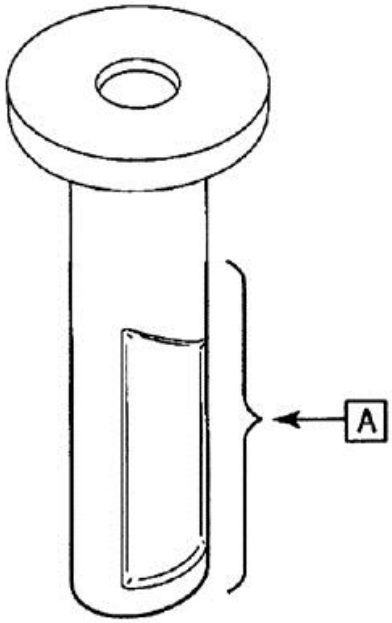

DESIGN NUMBER	270538
CLASS	09-07
1)PRAMIT SANGHAVI, AN INDIAN NATIONAL, WHOSE ADDRESS IS WZ-8/1, INDUSTRIAL AREA, KIRTI NAGAR, NEW DELHI-110015, INDIA	
DATE OF REGISTRATION	24/03/2015
TITLE	CAP FOR BOTTLE
PRIORITY NA	

DESIGN NUMBER	271384
CLASS	07-01
1)BAJAJ EQUIPMENTS LTD. A-97/6, WAZIRPUR INDUSTRIAL AREAS, NEW DELHI-110052, INDIA	
DATE OF REGISTRATION	15/04/2015
TITLE	CHAFING DISH
PRIORITY NA	

DESIGN NUMBER	273045
CLASS	05-05
1)SIDDHI VINAYAK KNOTS & PRINTS PVT. LTD. A COMPANY REGISTERED UNDER THE PROVISION OF COMPANIES ACT, 1956 HAVING ITS REGISTERED OFFICE AT A-26, CENTRAL PARK, GIDC, PANDESARA, SURAT-394221 GUJARAT	
DATE OF REGISTRATION	24/06/2015
TITLE	TEXTILE FABRIC
PRIORITY NA	

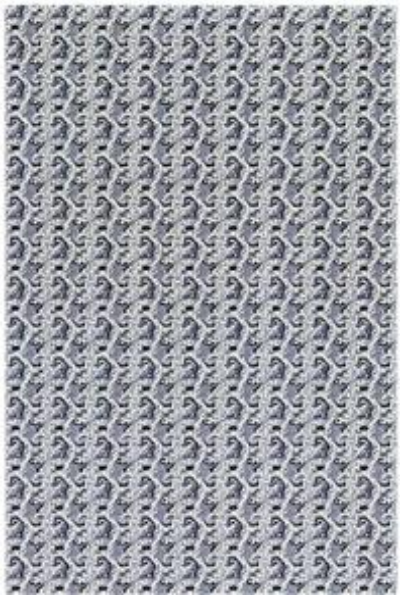

DESIGN NUMBER	274492
CLASS	23-02
1)GEBERIT INTERNATIONAL AG SCHACHENSTRASSE 77, 8645 JONA, SWITZERLAND, A COMPANY OF SWITZERLAND	
DATE OF REGISTRATION	14/08/2015
TITLE	CONTROL PANEL FOR TOILET FLUSH TANKS

PRIORITY

PRIORITY NUMBER	DATE	COUNTRY
893972401	19/05/2015	WIPO

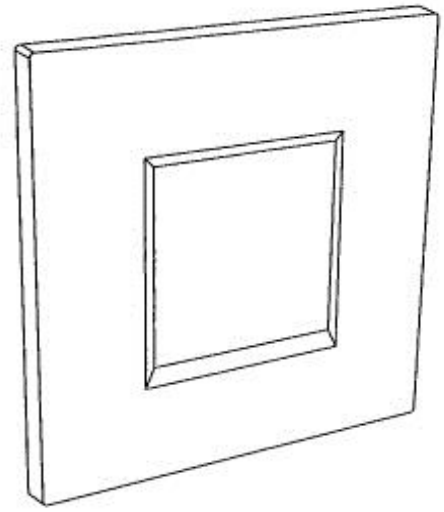

DESIGN NUMBER	226213
CLASS	24-02
1)SHARMA SURGICAL & ENGG. PVT. LTD FIRST FLOOR, GIRIKANDRA COMPLEX. OPP. BAPOD TALAV, NEAR HDFC ATM, WAGHODIA ROAD, VADODARA-390 019, GUJARAT-INDIA.	
DATE OF REGISTRATION	14/12/2009
TITLE	SURGICAL EQUIPMENT

PRIORITY NA

DESIGN NUMBER	270433
CLASS	08-05
1)NAGARAJU K. B ENGINE DIVISION, (B.C) HAL (B.C) C. V. RAMAN NAGAR (P.O), BENGALURU-560093. INDIAN NATIONAL	
DATE OF REGISTRATION	19/03/2015
TITLE	WELDING FIXTURE FOR AERO ENGINE COMPONENT

PRIORITY NA

DESIGN NUMBER	271207
CLASS	09-01
1)ATELIERS GLASSEX PRIVATE LIMITED 103, 104, 107 GOKUL ARCADE B, SUBHASH ROAD, VILE PARLE (E) MUMBAI - 400057, INDIA	
DATE OF REGISTRATION	07/04/2015
TITLE	BOTTLE
PRIORITY NA	

DESIGN NUMBER	271967
CLASS	13-01
1)TA-CHUANG WEI, OF NO. 158, RENHUA RD., DALI DIST., TAICHUNG CITY, TAIWAN, R.O.C. A CITIZEN OF TAIWAN	
DATE OF REGISTRATION	06/05/2015
TITLE	MOTOR HOUSING
PRIORITY NA	

DESIGN NUMBER	273231
CLASS	12-16
1)DAIMLER AG A CORPORATION ORGANIZED AND EXISTING UNDER THE LAWS OF GERMANY, OF MERCEDESSTRASSE 137, D-70327, STUTTGART, GERMANY	
DATE OF REGISTRATION	30/06/2015
TITLE	DASHBOARD FOR VEHICLES

PRIORITY

PRIORITY NUMBER	DATE	COUNTRY
885997901	13/04/2015	WIPO

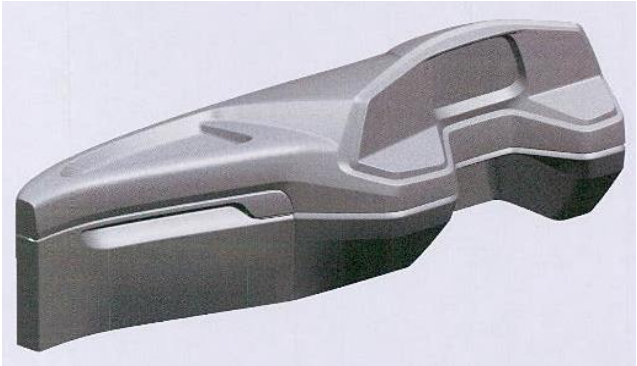

DESIGN NUMBER	272278
CLASS	13-03

1)GENERAL ELECTRIC COMPANY
1 RIVER ROAD, SCHENECTADY, NEW YOUK 12345 UNITED STATES OF AMERICA

DATE OF REGISTRATION	21/05/2015
TITLE	BUSBAR

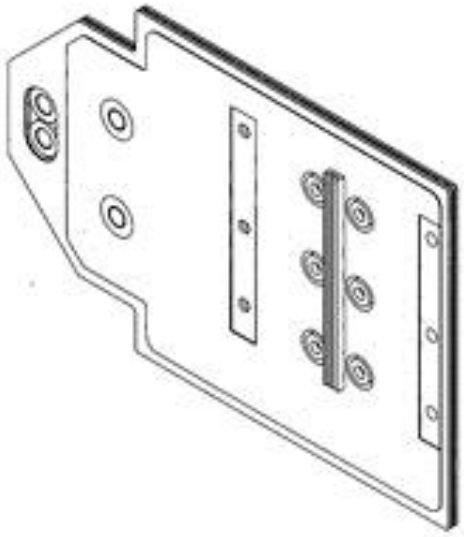

PRIORITY

PRIORITY NUMBER	DATE	COUNTRY
29/510279	26/11/2014	U.S.A.

DESIGN NUMBER	272456
CLASS	07-01

1)HNH HOTELWARES,
49/1, RAMA ROAD, INDUSTRIAL AREA, NEW DELHI-110015 (INDIA), (AN INDIAN PARTNERSHIP FIRM), WHOSE PARTNERS ARE ARJUN KAPOOR & SANTOSH KAPOOR, BOTH INDIAN NATIONALS AND AT THE SAME ABOVE ADDRESS

DATE OF REGISTRATION	02/06/2015
TITLE	BOWL

PRIORITY NA

DESIGN NUMBER	272887
CLASS	24-04

1)GLENMARK PHARMACEUTICALS LIMITED
GLENMARK HOUSE, HDO-CORPORATE BLDG, WING A, B. D. SAWANT MARG, CHAKALA, ANDHERI (EAST), MUMBAI 400099, STATE OF MAHARASHTRA, INDIA

DATE OF REGISTRATION	19/06/2015
TITLE	INHALATION SPACER

PRIORITY NA

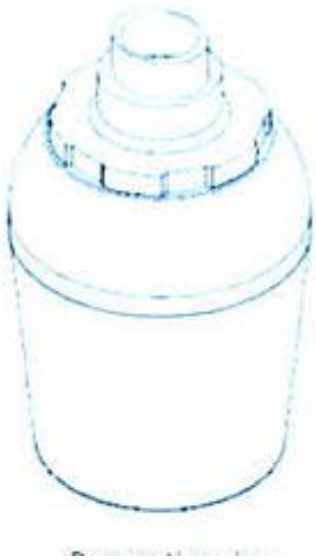

DESIGN NUMBER	274448
CLASS	15-05
1)SAMSUNG ELECTRONICS CO., LTD. 129, SAMSUNG-RO, YEONGTONG-GU, SUWON-SI, GYEONGGI-DO, 443-742, REPUBLIC OF KOREA, A COMPANY OF REPUBLIC OF KOREA	
DATE OF REGISTRATION	13/08/2015
TITLE	DOOR FOR WASHING MACHINE
PRIORITY	

PRIORITY NUMBER	DATE	COUNTRY
30-2015-0007976	13/02/2015	REPUBLIC OF KOREA

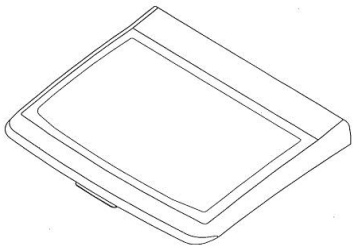

DESIGN NUMBER	271611
CLASS	30-03
1)HARESH SHAH, VASWANT MARKET, FLAT NO .2, OLD AGRA ROAD, PIMPALGAON BASWANT, TAULKA-NIPHAD, DISTRICT-NASHIK, STATE MAHARASHTRA, INDIA, PIN CODE- 422209. INDIAN	
DATE OF REGISTRATION	22/04/2015
TITLE	WATER DISPENSER FOR BIRDS
PRIORITY NA	

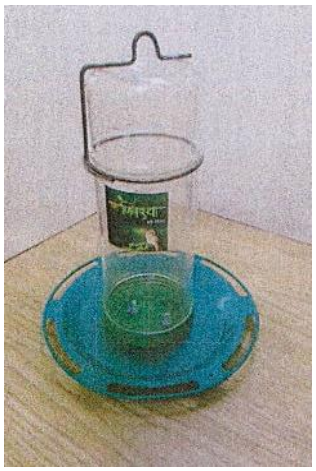

DESIGN NUMBER	270926
CLASS	09-03
1)HOLISOL LOGISTICS PRIVATE LIMITED A1, CARIAPPA MARG, SAINIK FARM, KHANPUR, NEW DELHI, INDIA	
DATE OF REGISTRATION	01/04/2015
TITLE	FRAME FOR PACKAGING & TRASPORATION
PRIORITY NA	

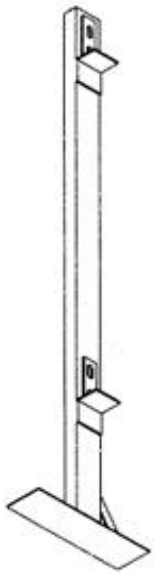

DESIGN NUMBER	272364
CLASS	09-01
1)MUKESH KUMAR AGARWAL S/O. LATE SH. HEERA LAL AGARWAL AT-B-XI/38, AUTOMOBILE NAGAR, DELHI BY PASS ROAD, JAIPUR-302003 (RAJASTHAN) NATIONALITY-INDIAN	
DATE OF REGISTRATION	26/05/2015
TITLE	CONTAINER
PRIORITY NA	

DESIGN NUMBER	272189
CLASS	25-02
1)INNISFREE CORPORATION 191, 2-GA, HANGANG-RD, YONGSAN-GU, SEOUL, REPUBLIC OF KOREA.	
DATE OF REGISTRATION	18/05/2015
TITLE	STORE FACADE

PRIORITY

PRIORITY NUMBER	DATE	COUNTRY
30-2014-0055750	19/11/2014	REPUBLIC OF KOREA

DESIGN NUMBER	272933
CLASS	26-05
1)THRIVE SOLAR ENERGY PVT. LTD., AT PLOT NO. 38/B, PHASE I, IDA CHERLAPALLY, HYDERABAD-500051 (A.P.), INDIA, INDIAN COMPANY AT THE ABOVE ADDRESS	
DATE OF REGISTRATION	22/06/2015
TITLE	LAMP
PRIORITY NA	

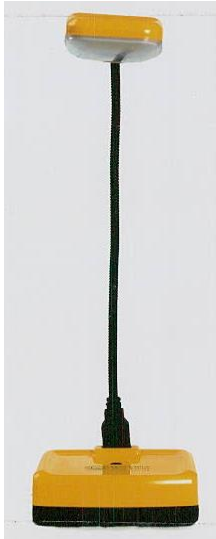

DESIGN NUMBER	270520
CLASS	15-99
1)S P M ENGINEERING CONCEPT, AN INDIAN PROPRIETORSHIP CONCERN OF. B/H. AVASH CNG PUMP, SUNNY STOVE MAIN ROAD, OPP. MADHAV POLYMERS, VERAVAL. (SHAPAR), DIS; RAJKOT-360004. (GUJARAT) INDIA, WHOSE PROPRIETOR IS BHANJIBHAI JIVABHAI MAIDA OF THE SAME ADDRESS, AN INDIAN NATIONAL	
DATE OF REGISTRATION	24/03/2015
TITLE	MACHINE FOR PERFORATION
PRIORITY NA	

DESIGN NUMBER	271584
CLASS	11-01
1)DEEPAK JAIN NIRMAL KUMAR, AN INDIAN CITIZEN AT 158, SHOP NO. 4, MINT STREET, SOWCARPET, CHENNAI-600079, TAMIL NADU	
DATE OF REGISTRATION	21/04/2015
TITLE	JEWELLERY
PRIORITY NA	

DESIGN NUMBER	272024
CLASS	08-08
1)AMRUTLAL SAMAT HARIA, AMRUTLAL NARCHI KHIMASIA AND SARLABEN SAVLA, ALL ARE INDIAN CITIZEN AND PARTNERS OF M/S. ROYAL, AN INDIAN PARTNERSHIP FIRM AT C-2/314, G.I.D.C., SHANKER TEKARI UDYOG NAGAR, JAMNAGAR-361004, GUJARAT, INDIA	
DATE OF REGISTRATION	11/05/2015
TITLE	BOLT
PRIORITY NA	

DESIGN NUMBER	272906
CLASS	19-06

1)S. S. B. METAL WORKS,
K. YUNUS BLDG., 2ND FLOOR, VISHWESHWAR NAGAR ROAD, OFF. AAREY ROAD, GOREGAON (E), MUMBAI - 400063, STATE OF MAHARASHTRA, (INDIA), INDIAN PARTNERSHIP FIRM, INDIAN NATIONALS WHOSE PARTNERS ARE:- 1. BHARAT JETHMAL LUNIA (2) PRAVIN JETHMAL LUNIA INDIAN NATIONAL, OF ABOVE ADDRESS

DATE OF REGISTRATION	22/06/2015
TITLE	BALL POINT PEN

PRIORITY NA

DESIGN NUMBER	274485
CLASS	12-16

1)TOYOTA JIDOSHA KABUSHIKI KAISHA, A JAPANESE CO.,
OF 1, TOYOTA-CHO, TOYOTA-SHI, AICHI-KEN, 471-8571, JAPAN

DATE OF REGISTRATION	14/08/2015
TITLE	INSTRUMENT PANEL FOR AN AUTOMOBILE

PRIORITY

PRIORITY NUMBER	DATE	COUNTRY
201511130	02/03/2015	AUSTRALIA

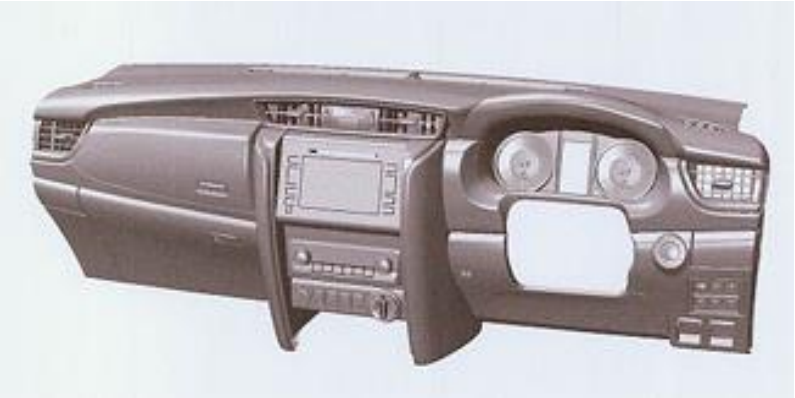

DESIGN NUMBER	270684
CLASS	13-03

1)LEGRAND FRANCE 128 AVENUE DU MARÉCHAL DE LATTRE-DE-TASSIGNY, 87000 LIMOGES - FRANCE, A FRENCH COMPANY AND
LEGRAND SNC, 128 AVENUE DU MARÉCHAL DE LATTRE DE TASSIGNY, 87000 LIMOGES - FRANCE, A GENERAL PARTNERSHIP FRENCH COMPANY

DATE OF REGISTRATION	27/03/2015
TITLE	PLATE FOR ELECTRIC SOCKET OR SWITCH

PRIORITY

PRIORITY NUMBER	DATE	COUNTRY
145167	18/11/2014	FRANCE

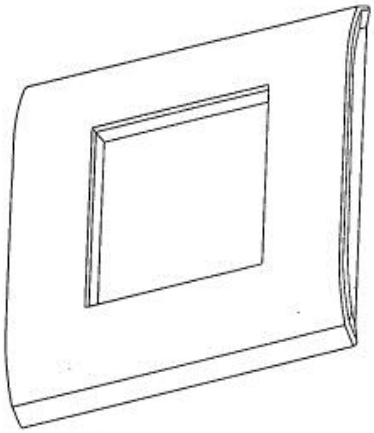

DESIGN NUMBER	270915
CLASS	31-00

1)KMTR CO., LTD. A KOREAN CORPORATION, (JUNGANG-DONG 6-GA, CJ KOREA EXPRESS BUILDING)
13F, #1306, 119, DAEGYO-RO, JUNG-GU, BUSAN, KOREA

DATE OF REGISTRATION	01/04/2015
TITLE	FOOD WASHING MACHINE

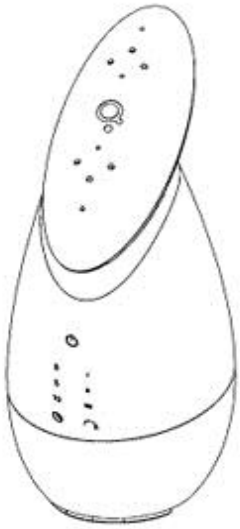

PRIORITY

PRIORITY NUMBER	DATE	COUNTRY
30-2014-0052259	31/10/2014	REPUBLIC OF KOREA

DESIGN NUMBER	272179
CLASS	21-01

1)ISRAR AHMED (INDIVIDUAL AND INDIAN NATIONAL), HAVING ITS REGISTERED OFFICE AT
PLOT NO. 389, PHASE-I, SHAZADA BAGH, DEHLI-110035

DATE OF REGISTRATION	18/05/2015
TITLE	TOY TRUCK

PRIORITY NA

DESIGN NUMBER	274629
CLASS	15-05

1)VIPUL GARG (INDIAN NATIONAL),
2551, (SATGHARA) DHARAM PURA, DARIBA, DELHI-110006

DATE OF REGISTRATION	19/08/2015
TITLE	SHELL FOR IRONING MACHINES

PRIORITY NA

DESIGN NUMBER	273111
CLASS	23-04
1)CROMPTON GREAVES LIMITED, CG HOUSE, 6TH FLOOR, DR. ANNIE BESANT ROAD, WORLI, MUMBAI - 400030, MAHARASHTRA, INDIA; AN INDIAN COMPANY	
DATE OF REGISTRATION	25/06/2015
TITLE	AIR COOLER
PRIORITY NA	

DESIGN NUMBER	272376
CLASS	13-03
1)CONA INDUSTRIES, 20/21, NIRAJ INDUSTRIAL ESTATE, OFF: MAHAKALI CAVES ROAD, ANDHERI EAST, MUMBAI-400093, MAHARASHTRA, INDIA, AN INDIAN SOLE PROPRIETORY FIRM, WHOSE PROPRIETOR IS PRAKASH NARAINDAS MOTWANI, AN INDIAN NATIONAL, RESIDENT OF GARDEN QUEEN, SANTACRUZ WEST, MUMBAI 400054, MAHARASHTRA, INDIA	
DATE OF REGISTRATION	27/05/2015
TITLE	ELECTRICAL SWITCH
PRIORITY NA	

DESIGN NUMBER	272193
CLASS	02-04
1)LIBERTY SHOES LIMITED, AN INDIAN COMPANY, OF LIBERTY PURAM, 13TH MILESTONE, GT KARNAL ROAD, KUTAIL, DT-KARNAL - 132001, HARYANA, INDIA	
DATE OF REGISTRATION	18/05/2015
TITLE	SHOE
PRIORITY NA	

DESIGN NUMBER	273077
CLASS	09-03

1)HISAMITSU PHARMACEUTICAL CO., INC., A COMPANY INCORPORATED UNDER THE LAW OF JAPAN,
OF 408, TASHIRODAIKAN-MACHI, TOSU-SHI, SAGA 841-0017, JAPAN

DATE OF REGISTRATION	25/06/2015
TITLE	PACKAGING BOX

PRIORITY

PRIORITY NUMBER	DATE	COUNTRY
2015-009104	22/04/2015	JAPAN

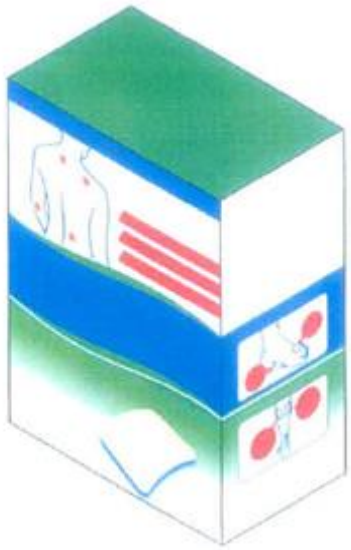

DESIGN NUMBER	274633
CLASS	24-02

1)MEDELA HOLDING AG,
LÄTTICHSTRASSE 4 B, 6340 BAAR, SWITZERLAND, A SWISS COMPANY

DATE OF REGISTRATION	19/08/2015
TITLE	BREASTSHIELD FOR A BREASTPUMP

PRIORITY

PRIORITY NUMBER	DATE	COUNTRY
874300501	20/02/2015	WIPO

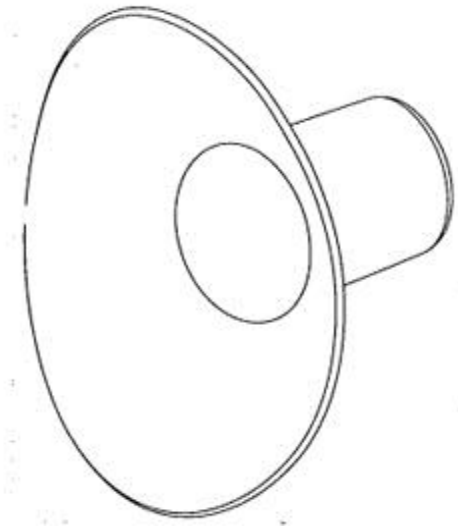

DESIGN NUMBER	271305
CLASS	14-03

1)ROBERT BOSCH GMBH, A GERMAN COMPANY OF
POSTFACH 30 02 20, 70442 STUTTGART, GERMANY

DATE OF REGISTRATION	10/04/2015
TITLE	OBD (ON-BOARD DIAGNOSTICS) COMMUNICATION PLUG

PRIORITY

PRIORITY NUMBER	DATE	COUNTRY
002555235	10/10/2014	OHIM

DESIGN NUMBER	272243
CLASS	28-03
1)UDIT AGARWAL, AN INDIAN CITIZEN, C/O GANGA SANITARY STORE, STATION ROAD, MORADABAD-244001, UP, INDIA	
DATE OF REGISTRATION	20/05/2015
TITLE	DISPENSER
PRIORITY NA	

DESIGN NUMBER	273081
CLASS	06-01
1)NATIONAL INSTITUTE OF DESIGN LOCATED AT PALDI, AHMEDABAD-380007, GUJARAT, HAVING NATIONALITY AS INDIAN	
DATE OF REGISTRATION	25/06/2015
TITLE	BENCH
PRIORITY NA	

DESIGN NUMBER	275012
CLASS	26-02
1)SINICON CONTROLS (P) LIMITED, A COMPANY REGISTERED UNDER THE COMPANIES ACT AT SINICON HOUSE, XVII/906, IDA, KANJIKODE WEST, PALAKKAD-678623, KERALA	
DATE OF REGISTRATION	28/08/2015
TITLE	TORCH
PRIORITY NA	

DESIGN NUMBER	271870
CLASS	15-05
1)BRY-AIR (ASIA) PVT. LTD. AN INDIAN NATIONAL COMPANY, HAVING REGISTERED OFFICE 20 RAJPUR ROAD, DELHI 110054	
DATE OF REGISTRATION	05/05/2015
TITLE	DEHUMIDIFIER
PRIORITY NA	

DESIGN NUMBER	273159
CLASS	08-09
1)GOPALBHAI S. VANSAJALIYA AND ALPESHBHAI V. RABARA BOTH INDIAN NATIONAL PARTNERS OF ANAND PLASTIC AN INDIAN PARTNERSHIP FIRM HAVING ITS PRINCIPAL PLACE OF BUSINESS AT SAMRAT INDUSTRIAL AREA, STREET NO. 22, BEHIND S. T. WORKSHOP, NEAR ELLORA TILES, RAJKOT-360004, GUJARAT-INDIA	
DATE OF REGISTRATION	26/06/2015
TITLE	DOOR MAGNET
PRIORITY NA	

DESIGN NUMBER	272969
CLASS	23-02
1)KOHLER CO. A COMPANY ORGANIZED AND EXISTING UNDER THE US LAW, OF 444 HIGHLAND DRIVE, KOHLER, WISCONSIN 53044, U.S.A.	
DATE OF REGISTRATION	22/06/2015
TITLE	SINK

PRIORITY

PRIORITY NUMBER	DATE	COUNTRY
29/513,049	24/12/2014	U.S.A.

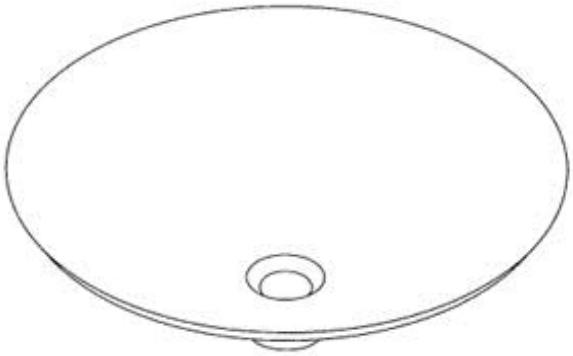

DESIGN NUMBER	272798
CLASS	12-16

1)DAIMLER AG, A CORPORATION ORGANIZED AND EXISTING UNDER THE LAWS OF GERMANY,
OF MERCEDESSTRASSE 137, D-70327, STUTTGART, GERMANY

DATE OF REGISTRATION	17/06/2015
TITLE	BUMPER FOR VEHICLES

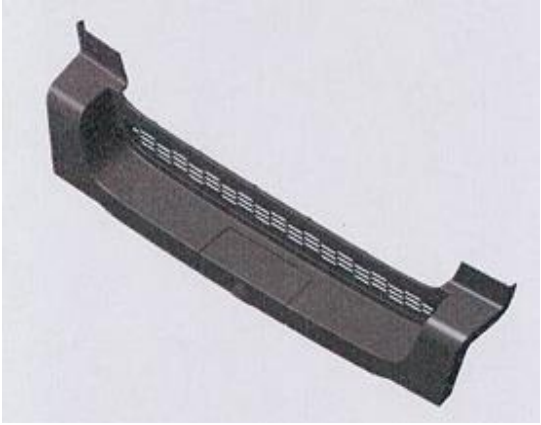

PRIORITY

PRIORITY NUMBER	DATE	COUNTRY
002623785-0006	30/01/2015	OHIM

DESIGN NUMBER	271568
CLASS	26-02

1)LALIT JAIN, AN INDIAN NATIONAL, RESIDENT OF
3026-D, GALI NO 4-A, RANJEET NAGAR, NEW DELHI-110008, INDIA

DATE OF REGISTRATION	21/04/2015
TITLE	LANTERN

PRIORITY NA

DESIGN NUMBER	273029
CLASS	05-05

1)SIDDHI VINAYAK KNOTS & PRINTS PVT. LTD. A COMPANY REGISTERED UNDER THE PROVISION OF COMPANIES ACT, 1956 HAVING ITS REGISTERED OFFICE AT
A-26, CENTRAL PARK, GIDC, PANDESARA, SURAT-394221 GUJARAT

DATE OF REGISTRATION	24/06/2015
TITLE	TEXTILE FABRIC

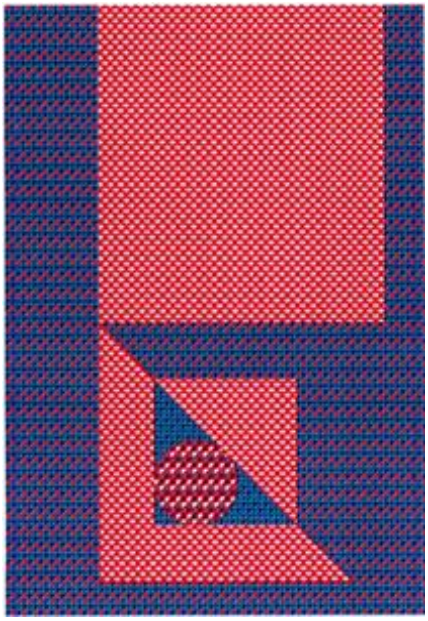

PRIORITY NA

DESIGN NUMBER	272718
CLASS	12-15

1)COMPAGNIE GENERALE DES ETABLISSEMENTS MICHELIN, A FRENCH COMPANY OF 12 COURS SABLON- F-63000, CLERMONT-FERRAND, FRANCE,
AND MICHELIN RECHERCHE ET TECHNIQUE S.A., A SWISS COMPANY OF ROUTE LOUIS- BRAILLE 10-CH-1763 GRANGES-PACCOT, SWITZERLAND

DATE OF REGISTRATION	15/06/2015
TITLE	PNEUMATIC TYRE

PRIORITY

PRIORITY NUMBER	DATE	COUNTRY
002598722-0001	16/12/2014	OHIM

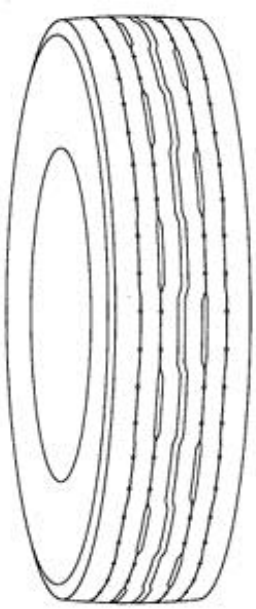

DESIGN NUMBER	274480
CLASS	26-06

1)TOYOTA JIDOSHA KABUSHIKI KAISHA, A JAPANESE CO.,
OF 1, TOYOTA-CHO, TOYOTA-SHI, AICHI-KEN, 471-8571, JAPAN

DATE OF REGISTRATION	14/08/2015
TITLE	FRONT COMBINATION LAMP FOR AN AUTOMOBILE

PRIORITY

PRIORITY NUMBER	DATE	COUNTRY
201511125	02/03/2015	AUSTRALIA

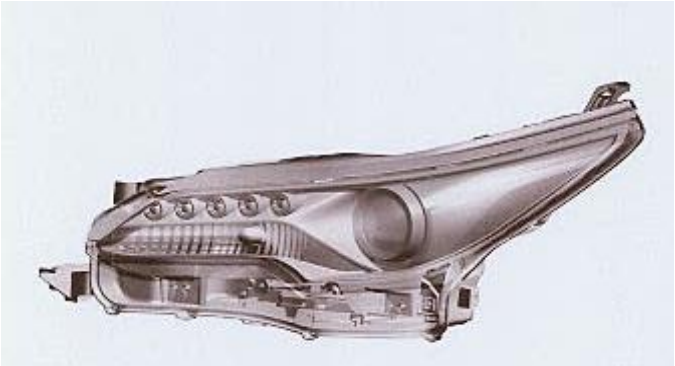

DESIGN NUMBER	226160
CLASS	07-99

1)SELVEL INDUSTRIES
INDIAN NATIONAL, 3, 1ST FLOOR, VAKIL INDUSTRIAL ESTATE, WALBHAT ROAD, GOREGAON (EAST), MUMBAI-400063, STATE OF MAHARSHTRA, (INDIA)

DATE OF REGISTRATION	09/12/2009
TITLE	TRAY

PRIORITY NA

DESIGN NUMBER	270454
CLASS	09-03
1)BHARAT PETROLEUM CORPORATION LIMITED BHARAT BHAVAN, 4 AND 6 CURRIMBHOY ROAD, BALLARD ESTATE, MUMBAI 400 010, STATE OF MAHARASHTRA, INDIA	
DATE OF REGISTRATION	19/03/2015
TITLE	CONTAINER
PRIORITY NA	

DESIGN NUMBER	273232
CLASS	12-09
1)MAHINDRA & MAHINDRA LIMITED GATEWAY BUILDING, APOLLO BUNDER, MUMBAI 400 001, MAHARASHTRA	
DATE OF REGISTRATION	30/06/2015
TITLE	TRACTOR
PRIORITY NA	

DESIGN NUMBER	272279
CLASS	13-03
1)GENERAL ELECTRIC COMPANY, AN ORAGANIZATION REGISTERED UNDER THE LAWS OF UNITED STATES OF AMERICA, AND HAVING ITS OFFICE AT 1 RIVER ROAD, SCHENECTADY, NEW YORK 12345 UNITED STATES OF AMERICA	
DATE OF REGISTRATION	21/05/2015
TITLE	BUSBAR

PRIORITY

PRIORITY NUMBER	DATE	COUNTRY
29/510279	26/11/2014	U.S.A.

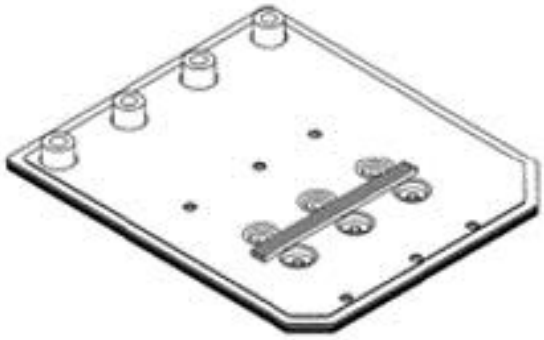

DESIGN NUMBER	274459
CLASS	08-06
1)(1) VALLABHBHAI THAKARSIBHAI RAMANI (2) SURESHBHAI THAKARSIBHAI RAMANI (BOTH THE PARTNERS ARE ADULT & INDIAN NATIONAL) PARTNERS OF SOLAR INDUSTRIES (INDIAN PARTNERSHIP FIRM) HAVING PLACE OF BUSINESS AT: AJI GIDC, PHASE-2-P-ROAD, K-1/204/P-4, NEAR TURBO BEARING, RAJKOT-360003-GUJARAT-(INDIA)	
DATE OF REGISTRATION	14/08/2015
TITLE	HANDLE
PRIORITY NA	

DESIGN NUMBER	244101
CLASS	08-06
1)(1) PRADIPBHAI K. MEHTA, (2)) AMITBHAI P. MEHTA AND (3) CHETANBHAI P. MEHTA ALL INDIAN NATIONAL PARTNERS OF KOMAL MANUFACTURING CO. PLOT NO. 27, SURVEY NO. 224, SOMNATH IND. 5, RAJKOT GONDAL BYPASS ROAD, VILLAGE: KOTHARIYA, SOLVENT, RAJKOT, GUJARAT, INDIA	
DATE OF REGISTRATION	26/03/2012
TITLE	HANDLE
PRIORITY NA	

DESIGN NUMBER	272498
CLASS	05-05
1)SIDDHI VINAYAK KNOTS & PRINTS PVT. LTD. A COMPANY REGISTERED UNDER THE PROVISION OF COMPANIES ACT, 1956 HAVING ITS REGISTERED OFFICE AT A-26, CENTRAL PARK, GIDC, PANDESARA, SURAT-394221 GUJARAT	
DATE OF REGISTRATION	03/06/2015
TITLE	TEXTILE FABRIC
PRIORITY NA	

DESIGN NUMBER	274488
CLASS	23-02
1)A. THANIGAIVEL, HAVING ADDRESSED AT 22/10, 1ST STREET, SIVA SAKTHI NAGAR (EXTN), KOLATHUR, CHENNAI-600099, TAMILNADU, INDIA	
DATE OF REGISTRATION	14/08/2015
TITLE	TOILET BASE
PRIORITY NA	

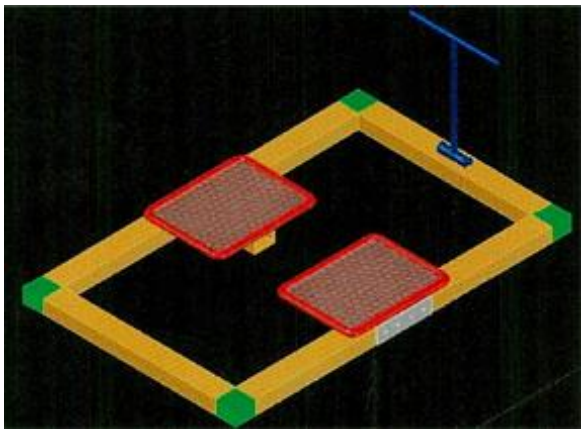

DESIGN NUMBER	226211
CLASS	24-02
1)SHARMA SURGICAL & ENGG. PVT. LTD FIRST FLOOR, GIRIKANDRA COMPLEX. OPP. BAPOD TALAV, NEAR HDFC ATM, WAGHODIA ROAD, VADODARA-390019, GUJARAT-INDIA	
DATE OF REGISTRATION	14/12/2009
TITLE	SURGICAL EQUIPMENT
PRIORITY NA	

DESIGN NUMBER	270646
CLASS	02-04
1)HARI SHANKAR BAHETY, C-1/28, JANAK PURI, NEW DELHI 110058, INDIA, INDIAN NATIONAL	
DATE OF REGISTRATION	27/03/2015
TITLE	FOOTWEAR
PRIORITY NA	

DESIGN NUMBER	272082
CLASS	11-02

1)MA DESIGN INDIA PRIVATE LIMITED, A COMPANY INCORPORATED IN INDIA HAVING ITS PRINCIPAL PLACE OF BUSINESS AT
A-41, SECTOR-80, PHASE-II, NOIDA-201305, U.P. INDIA

DATE OF REGISTRATION	13/05/2015
TITLE	WALL ORANAMENT

PRIORITY NA

DESIGN NUMBER	272323
CLASS	23-02

1)GEBERIT INTERNATIONAL AG
SCHACHENSTRASSE 77, 8645 JONA, SWITZERLAND, A COMPANY OF SWITZERLAND

DATE OF REGISTRATION	25/05/2015
TITLE	CONTROL PANEL FOR TOILET FLUSH TANKS

PRIORITY

PRIORITY NUMBER	DATE	COUNTRY
854903801	26/11/2014	WIPO

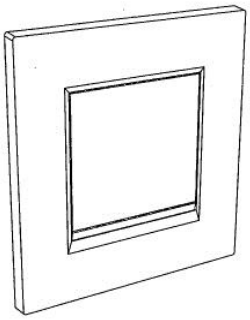

DESIGN NUMBER	272131
CLASS	13-03

1)GENERAL ELECTRIC COMPANY,
1 RIVER ROAD, SCHENECTADY, NEW YORK 12345 UNITED STATES OF AMERICA

DATE OF REGISTRATION	14/05/2015
TITLE	BUSBAR

PRIORITY

PRIORITY NUMBER	DATE	COUNTRY
29/510310	26/11/2014	U.S.A.

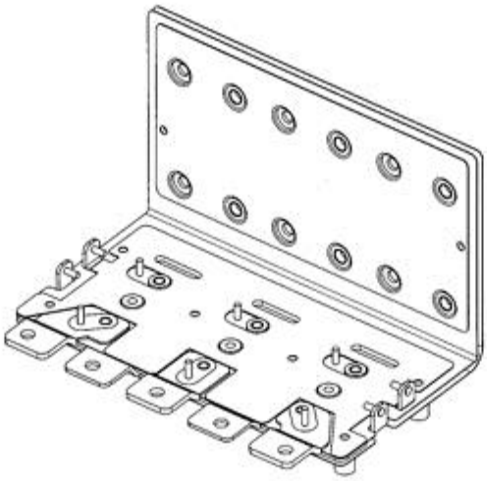

DESIGN NUMBER	272919
CLASS	26-05
1)MA DESIGN INDIA PRIVATE LIMITED, A COMPANY INCORPORATED IN INDIA HAVING ITS PRINCIPAL PLACE OF BUSINESS AT A-41, SECTOR-80, PHASE-II, NOIDA-201305, U.P. INDIA	
DATE OF REGISTRATION	22/06/2015
TITLE	TABLE LAMP
PRIORITY NA	

DESIGN NUMBER	273051
CLASS	05-05
1)SIDDHI VINAYAK KNOTS & PRINTS PVT. LTD. A COMPANY REGISTERED UNDER THE PROVISION OF COMPANIES ACT, 1956 HAVING ITS REGISTERED OFFICE AT A-26, CENTRAL PARK, GIDC, PANDESARA, SURAT-394221 GUJARAT	
DATE OF REGISTRATION	24/06/2015
TITLE	TEXTILE FABRIC
PRIORITY NA	

DESIGN NUMBER	274626
CLASS	15-05
1)VIPUL GARG (INDIAN NATIONAL), 2551, (SATGHARA) DHARAM PURA, DARIBA, DELHI-110006	
DATE OF REGISTRATION	19/08/2015
TITLE	IRONING MACHINES
PRIORITY NA	

DESIGN NUMBER	270685
CLASS	13-03
1)LEGRAND FRANCE 128 AVENUE DU MARÉCHAL DE LATTRE-DE-TASSIGNY, 87000 LIMOGES - FRANCE, A FRENCH COMPANY AND LEGRAND SNC, 128 AVENUE DU MARÉCHAL DE LATTRE DE TASSIGNY, 87000 LIMOGES - FRANCE, A GENERAL PARTNERSHIP FRENCH COMPANY	
DATE OF REGISTRATION	27/03/2015
TITLE	PLATE FOR ELECTRIC SOCKET OR SWITCH

PRIORITY

PRIORITY NUMBER	DATE	COUNTRY
145167	18/11/2014	FRANCE

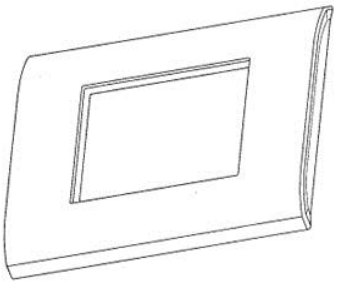

DESIGN NUMBER	272091
CLASS	11-02
1)MA DESIGN INDIA PRIVATE LIMITED, A COMPANY INCORPORATED IN INDIA HAVING ITS PRINCIPAL PLACE OF BUSINESS AT A-41, SECTOR-80, PHASE-II, NOIDA-201305, U.P. INDIA	
DATE OF REGISTRATION	13/05/2015
TITLE	DECORATIVE TABLE ARTICLE

PRIORITY NA

DESIGN NUMBER	272352
CLASS	15-01
1)GREAVES COTTON LIMITED, MOTILAL OSWAL TOWER. 3RD FLOOR, JUNCTIONS OF GOKHALE & SAYANI ROAD, PRABHADEVI, MUMBAI 400025, STATE OF MAHARASHTRA, INDIA	
DATE OF REGISTRATION	26/05/2015
TITLE	ENGINE

PRIORITY NA

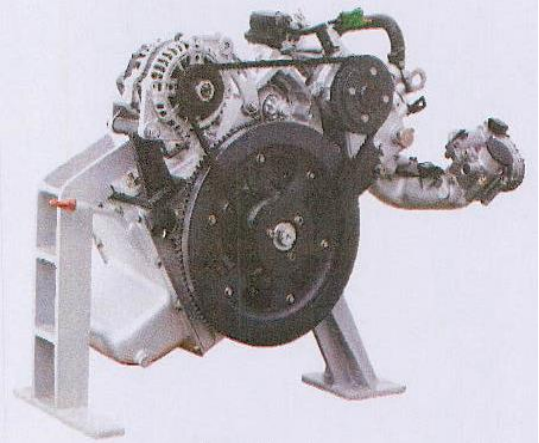

DESIGN NUMBER	274630
CLASS	12-99
1)SOLEX AUTO PVT. LTD., E-2, UPSIDC INDUSTRIAL AREA, BEGRAJPUR, MUZAFFAR NAGAR, U.P., INDIA (AN INDIAN COMPANY DULY REGISTERED UNDER THE COMPANIES ACT, 1956)	
DATE OF REGISTRATION	19/08/2015
TITLE	HORN
PRIORITY NA	

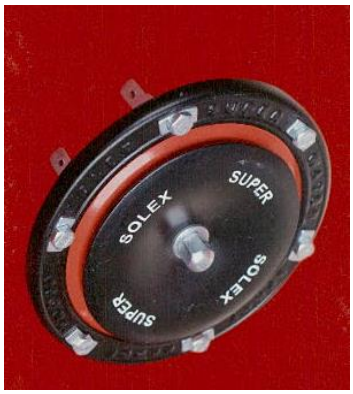

DESIGN NUMBER	270644
CLASS	02-04
1)HARI SHANKAR BAHETY, C-1/28, JANAK PURI, NEW DELHI 110058, INDIA, INDIAN NATIONAL	
DATE OF REGISTRATION	27/03/2015
TITLE	FOOTWEAR
PRIORITY NA	

DESIGN NUMBER	272079
CLASS	06-07
1)MA DESIGN INDIA PRIVATE LIMITED, A COMPANY INCORPORATED IN INDIA HAVING ITS PRINCIPAL PLACE OF BUSINESS AT A-41, SECTOR-80, PHASE-II, NOIDA-201305, U.P. INDIA	
DATE OF REGISTRATION	13/05/2015
TITLE	PHOTO FRAME
PRIORITY NA	

DESIGN NUMBER	271386
CLASS	07-01
1)BAJAJ EQUIPMENTS LTD. A-97/6, WAZIRPUR INDUSTRIAL AREAS, NEW DELHI-110052, INDIA	
DATE OF REGISTRATION	15/04/2015
TITLE	CHAFING DISH
PRIORITY NA	

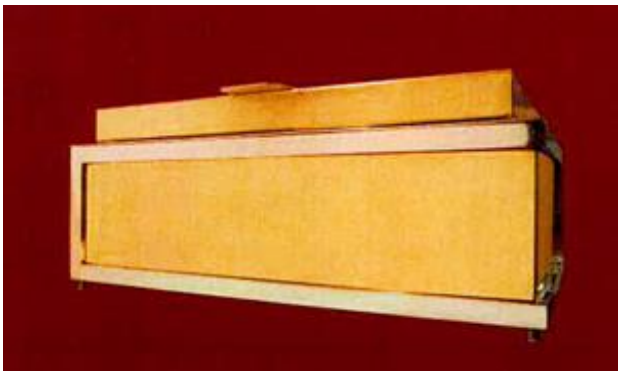

DESIGN NUMBER	272319
CLASS	08-09
1)FORMATIVE ENGINEERING PVT. LTD. INDUSTRIAL AREA-C, SUA ROAD, DHANDARI KALAN, LUDHIANA-141010 (PUNJAB) INDIA (AN INDIAN COMPANY DULY REGISTERED UNDER THE COMPANIES ACT, 1956) OF THE ABOVE ADDRESS	
DATE OF REGISTRATION	25/05/2015
TITLE	RAIL-HEAD FOR GATES & GRILLS
PRIORITY NA	

DESIGN NUMBER	272916
CLASS	07-01
1)MA DESIGN INDIA PRIVATE LIMITED, A COMPANY INCORPORATED IN INDIA HAVING ITS PRINCIPAL PLACE OF BUSINESS AT A-41, SECTOR-80, PHASE-II, NOIDA-201305, U.P. INDIA	
DATE OF REGISTRATION	22/06/2015
TITLE	DISH
PRIORITY NA	

DESIGN NUMBER	273048
CLASS	05-05

1)SIDDHI VINAYAK KNOTS & PRINTS PVT. LTD. A COMPANY REGISTERED UNDER THE PROVISION OF COMPANIES ACT, 1956 HAVING ITS REGISTERED OFFICE AT
A-26, CENTRAL PARK, GIDC, PANDESARA, SURAT-394221 GUJARAT

DATE OF REGISTRATION	24/06/2015
TITLE	TEXTILE FABRIC

PRIORITY NA

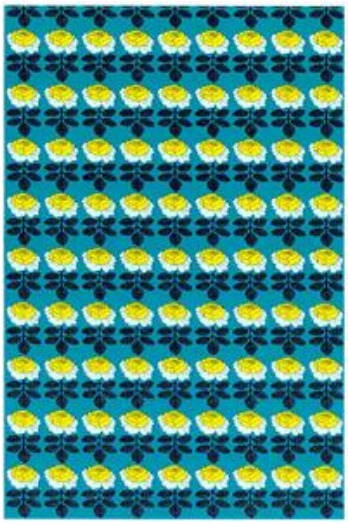

DESIGN NUMBER	272751
CLASS	09-07

1)APTARGROUP, INC.,
475 WEST TERRA COTTA AVENUE, SUITE E, CRYSTAL LAKE, ILLINOIS 60014-9695, UNITED STATES OF AMERICA, A DELAWARE CORPORATION

DATE OF REGISTRATION	15/06/2015
TITLE	CLOSURE FOR CONTAINER

PRIORITY

PRIORITY NUMBER	DATE	COUNTRY
29/524,675	22/04/2015	U.S.A.

DESIGN NUMBER	275148
CLASS	23-04

1)HAVELLS INDIA LIMITED
1, RAJ NARAIN MARG, CIVIL LINES, DELHI 110054.

DATE OF REGISTRATION	01/09/2015
TITLE	COOLER

PRIORITY NA

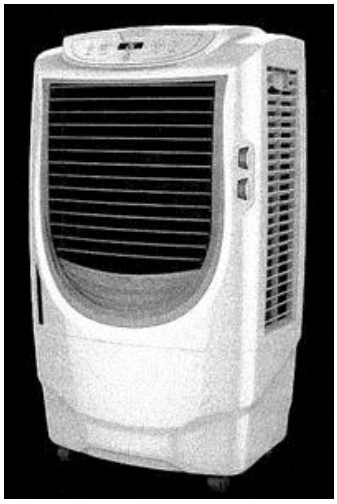

DESIGN NUMBER	270645
CLASS	02-04
1)HARI SHANKAR BAHETY, C-1/28, JANAK PURI, NEW DELHI 110058, INDIA, INDIAN NATIONAL	
DATE OF REGISTRATION	27/03/2015
TITLE	FOOTWEAR
PRIORITY NA	

DESIGN NUMBER	271387
CLASS	07-01
1)BAJAJ EQUIPMENTS LTD. A-97/6, WAZIRPUR INDUSTRIAL AREAS, NEW DELHI- 110052, INDIA	
DATE OF REGISTRATION	15/04/2015
TITLE	CHAFING DISH TABLE
PRIORITY NA	

DESIGN NUMBER	272128
CLASS	13-03
1)GENERAL ELECTRIC COMPANY 1 RIVER ROAD, SCHENECTADY, NEW YORK 12345 UNITED STATES OF AMERICA	
DATE OF REGISTRATION	14/05/2015
TITLE	BUSBAR

PRIORITY

PRIORITY NUMBER	DATE	COUNTRY
29/509700	20/11/2014	U.S.A.

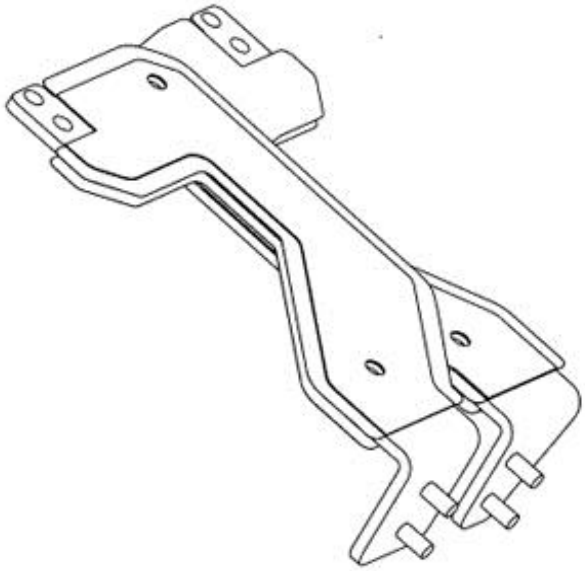

DESIGN NUMBER	272917
CLASS	26-05
1)MA DESIGN INDIA PRIVATE LIMITED, A COMPANY INCORPORATED IN INDIA HAVING ITS PRINCIPAL PLACE OF BUSINESS AT A-41, SECTOR-80, PHASE-II, NOIDA-201305, U.P. INDIA	
DATE OF REGISTRATION	22/06/2015
TITLE	TABLE LAMP
PRIORITY NA	

DESIGN NUMBER	226158
CLASS	13-03
1)LIGHT & SHDE ELECTRICALS PVT.LTD 303, OWNERS INDUSTRIAL ESTATE, GABRIAL RAOD, MAHIM, MUMBAI-400016 STATE OF MAHARASHTRA INDIA.	
DATE OF REGISTRATION	09/12/2009
TITLE	TELEVISION ANTENNA SOCKET
PRIORITY NA	

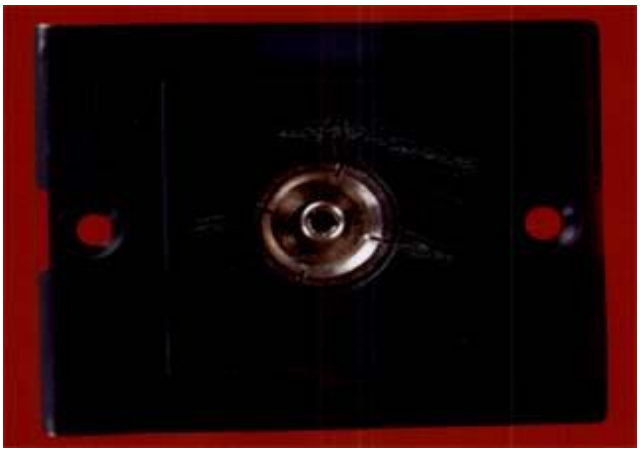

DESIGN NUMBER	271307
CLASS	14-03
1)ROBERT BOSCH GMBH, A GERMAN COMPANY OF POSTFACH 30 02 20, 70442 STUTTGART, GERMANY	
DATE OF REGISTRATION	10/04/2015
TITLE	OBD (ON-BOARD DIAGNOSTICS) COMMUNICATION PLUG

PRIORITY

PRIORITY NUMBER	DATE	COUNTRY
002555235	10/10/2014	OHIM

DESIGN NUMBER	271506
CLASS	28-03

1)LEXINGTON INTERNATIONAL, LLC, AN U.S.A. COMPANY, HAVING ITS ADDRESS
AT 777 YAMATO ROAD SUITE 105, BOCA RATON, FLORIDA, 33431, UNITED STATES

DATE OF REGISTRATION	17/04/2015
TITLE	LIGHT EMITTING HEADBAND

PRIORITY

PRIORITY NUMBER	DATE	COUNTRY
29/506,769	20/10/2014	U.S.A.

DESIGN NUMBER	272870
CLASS	21-02

1)YONEX KABUSHIKI KAISHA, A CORPORATION ORGANIZED AND EXISTING UNDER THE LAWS OF JAPAN,
OF 23-13, YUSHIMA 3-CHOME BUNKYO-KU, TOKYO JAPAN

DATE OF REGISTRATION	19/06/2015
TITLE	BADMINTON RACKET FRAME

PRIORITY

PRIORITY NUMBER	DATE	COUNTRY
201530114222.1	24/04/2015	CHINA

DESIGN NUMBER	275102
CLASS	06-01

1)PRIMA PLASTICS LTD., A COMPANY INCORPORATED UNDER THE INDIAN COMPANIES ACT,
AT 41 NATIONAL HOUSE, SAKI - VIHAR ROAD, POWAI, ANDHERI (E), MUMBAI - 400072

DATE OF REGISTRATION	01/09/2015
TITLE	CHAIR

PRIORITY NA

DESIGN NUMBER	274727
CLASS	09-07

1)DECATHLON,
4, BOULEVARD DE MONS, 59650, VILLENEUVE D'ASCQ, FRANCE, A COMPANY OF FRANCE

DATE OF REGISTRATION	21/08/2015
TITLE	CAP

PRIORITY

PRIORITY NUMBER	DATE	COUNTRY
002638858-0003	23/02/2015	OHIM