पेटेंट कार्यालय
शासकीय जर्नल

OFFICIAL JOURNAL
OF
THE PATENT OFFICE

निर्गमन सं. 43/2015	शुक्रवार	दिनांक: 23/10/2015
ISSUE NO. 43/2015	FRIDAY	DATE: 23/10/2015

पेटेंट कार्यालय का एक प्रकाशन

PUBLICATION OF THE PATENT OFFICE

INTRODUCTION

In view of the recent amendment made in the Patents Act, 1970 by the Patents (Amendment) Act, 2005 effective from 01st January 2005, the Official Journal of The Patent Office is required to be published under the Statute. This Journal is being published on weekly basis on every Friday covering the various proceedings on Patents as required according to the provision of Section 145 of the Patents Act 1970. All the enquiries on this Official Journal and other information as required by the public should be addressed to the Controller General of Patents, Designs & Trade Marks. Suggestions and comments are requested from all quarters so that the content can be enriched.

(Rajiv Aggarwal)
CONTROLLER GENERAL OF PATENTS, DESIGNS & TRADE MARKS

23rd OCTOBER, 2015

CONTENTS

THE PATENT OFFICE
KOLKATA, 23/10/2015
Address of the Patent Offices/Jurisdictions
The following are addresses of all the Patent Offices located at different places having their Territorial Jurisdiction on a Zonal basis as shown below:-

1	Office of the Controller General of Patents, Designs & Trade Marks, Boudhik Sampada Bhavan, Near Antop Hill Post Office,S.M.Road,Antop Hill, Mumbai – 400 037 Phone: (91)(22) 24123311, Fax : (91)(22) 24123322 E-mail: cgpdtm@nic.in	4	The Patent Office, Government of India, Intellectual Property Rights Building, G.S.T. Road, Guindy, Chennai – 600 032. Phone: (91)(44) 2250 2081-84 Fax : (91)(44) 2250 2066 E-mail: chennai-patent@nic.in ❖ The States of Andhra Pradesh, Telangana, Karnataka, Kerala, Tamil Nadu and the Union Territories of Puducherry and Lakshadweep.
2	The Patent Office, Government of India, Boudhik Sampada Bhavan, Near Antop Hill Post Office,S.M.Road,Antop Hill, Mumbai – 400 037 Phone: (91)(22) 24137701 Fax: (91)(22) 24130387 E-mail: mumbai-patent@nic.in ❖ The States of Gujarat, Maharashtra, Madhya Pradesh, Goa and Chhattisgarh and the Union Territories of Daman and Diu & Dadra and Nagar Haveli	5	The Patent Office (Head Office), Government of India, Boudhik Sampada Bhavan, CP-2, Sector –V, Salt Lake City, Kolkata- 700 091 Phone: (91)(33) 2367 1943/44/45/46/87 Fax: (91)(33) 2367 1988 E-Mail: kolkata-patent@nic.in ❖ Rest of India
3	The Patent Office, Government of India, Boudhik Sampada Bhavan, Plot No. 32., Sector-14, Dwarka, New Delhi – 110075 Phone: (91)(11) 2808 1921 – 25 Fax: (91)(11) 2808 1920 & 2808 1940 E.mail: delhi-patent@nic.in ❖ The States of Haryana, Himachal Pradesh, Jammu and Kashmir, Punjab, Rajasthan, Uttar Pradesh, Uttaranchal, Delhi and the Union Territory of Chandigarh.		

Website: www.ipindia.nic.in
www.patentoffice.nic.in

All applications, notices, statements or other documents or any fees required by the Patents Act, 1970 and The Patents (Amendment) Act, 2005 or by the Patents (Amendment) Rules, 2006 will be received only at the appropriate offices of the Patent Office.

Fees: The Fees may either be paid in cash or may be sent by Bank Draft or Cheques payable to the Controller of Patents drawn on a scheduled Bank at the place where the appropriate office is situated.

पेटेंट कार्यालय

कोलकाता, दिनांक 23/10/2015

• कार्यालयों के क्षेत्राधिकार के पते

विभिन्न जगहों पर स्थित पेटेंट कार्यालय के पते आंचलिक आधार पर दर्शित उनके प्रादेशिक अधिकार क्षेत्र के साथ नीचे दिए गए है:-

1	कार्यालय : महानियंत्रक, एकस्व, अभिकल्प तथा व्यापार चिहन, एंटोप हिल डाकघर के समीप, एस. एम. रोड, एंटोप हिल, मुम्बई- 400 037, भारत, फोन: (91) (22) 24123311 फ़ैक्स: (91) (22) 24123322 ई. मेल: cgpdtm@nic.in	4	पेटेंट कार्यालय, भारत सरकार इंटेलेक्चुअल प्रॉपर्टी राइट्स बिल्डिंग, इंडस्ट्रियल इस्टेट एसआईडीसीओ आरएमडी गोडाउन एरिया एडजसेन्ट टु ईगल फ्लास्क, जी. एस. टी. रोड, गायन्डी चेन्नई - 600 032. फोन: (91)(44) 2250 2081-84 फ़ैक्स: (91)(44) 2250-2066 ई. मेल: chennai-patent@nic.in ❖ आन्ध्र प्रदेश, तेलंगाना, कर्नाटक, केरल, तमिलनाडु तथा पुडुचेरी राज्य क्षेत्र एवं संघ शासित क्षेत्र, लक्षदीप
2	पेटेंट कार्यालय, भारत सरकार बौद्धिक संपदा भवन, एंटोप हिल डाकघर के समीप, एस. एम. रोड, एंटोप हिल, मुम्बई- 400 037, फोन: (91) (22) 24137701 फ़ैक्स: (91) (22) 24130387 ई. मेल: Mumbai-patent@nic.in ❖ गुजरात, महाराष्ट्र, मध्य प्रदेश, गोवा तथा छत्तीसगढ़ राज्य क्षेत्र एवं संघ शासित क्षेत्र, दमन तथा दीव, दादर और नगर हवेली•	5	पेटेंट कार्यालय, भारत सरकार कोलकाता, (प्रधान कार्यालय) बौद्धिक संपदा भवन, सीपी-2, सेक्टर- V, साल्ट लेक सिटी, कोलकाता-700 091, भारत. फोन: (91)(33) 2367 1943/44/45/46/87 फ़ैक्स:/Fax: (91)(33) 2367 1988 ई. मेल: kolkata-patent@nic.in ❖ भारत का अवशेष क्षेत्र
3	पेटेंट कार्यालय, भारत सरकार बौद्धिक संपदा भवन, प्लॉट सं. 32, सेक्टर- 14, द्वारका, नई दिल्ली- 110 075. फोन: (91)(11) 2808 1921-25 फ़ैक्स: (91)(11) 2808 1920, 2808 1940 ई. मेल: delhi-patent@nic.in हरियाणा, हिमाचल प्रदेश, जम्मू तथा कश्मीर, पंजाब,राजस्थान, उत्तर प्रदेश, दिल्ली तथा उत्तरांचल राज्य क्षेत्रों, एवं संघ शासित क्षेत्र चंडीगढ़		

वेबसाइट: http://www.ipindia.nic.in

www.patentoffice.nic.in

पेटेंट अधिनियम, 1970 तथा पेटेंट (संशोधन) अधिनियम, 2005 अथवा पेटेंट (संशोधन) नियम, 2006 द्वारा वांछित सभी आवेदन, सूचनाए, विवरण या अन्य दस्तावेज़ या कोई शुल्क पेटेंट कार्यालय के केवल उपयुक्त कार्यालय में स्वीकृत होंगे।

शुल्क: शुल्क या तो नगद रूप में या Controller of Patents के नाम में देय बैंक ड्राफ्ट या चेक के द्वारा भेजी जा सकती है जो उसी स्थान के किसी अनुसूचित बैंक में प्रदत्त हो जहाँ उपयुक्त कार्यालय स्थित है ।

SPECIAL NOTICE

18 Months publication as required under Section 11A of the Patents Act, 1970 as amended by the Patents (Amendment) Act, 2005.

Notice is hereby given that any person at any time before the grant of Patent may give representation by way of opposition to the Controller of Patents at appropriate office on the ground and in a manner specified under section 25(1) of the Patents (Amendment) Act, 2005 read with Rule 55 of the Patents (Amendment) Rules, 2006.

Notice is also given that if any interested person requests for copies of the complete specification, drawing and abstract of any application already published, the photocopy of the same can be supplied by the Patent Office as per the jurisdiction on payment of prescribed fees of Rs.8/- per page. If any further details are required to be obtained, the same can be provided by the respective Patent Offices on request.

(Rajiv Aggarwal)
CONTROLLER GENERAL OF PATENTS, DESIGNS & TRADE MARKS

SPECIAL NOTICE

Under the new provision of the Patents Act, 1970 as amended by the Patents (Amendment) Act, 2005 and Rules there under, Publication of the matter relating to Patents in the Official Gazette of India Part III, Section 2 has been discontinued and instead The Official Journal of the Patent Office is being published containing all the activities of The Patent Office such as publication of all the patent applications after 18th months , grant of patents & all other information in respect of the proceedings as required under the provisions of the Patents (Amendment) Act, 2005 and Rules thereunder on weekly basis on every **Friday**.

The Journal is uploaded in the website every Friday. So Paper form and CD-ROM form of the Journal are discontinued from 01/01/2009.

SPECIAL NOTICE

Every effort is being taken to publish all the patent applications under section 11(A) of the Patents Act. However, if duplication of publication of any application is found, then earlier date of publication will be taken for the purpose of provisional protection for applicant and Patent Office will grant Patent not before six months from the date of second publication, provided that there is there is no third party representation.

Early Publication:

The following patent applications have been published under section 11A (2) of The Patents (Amendment) Act 2005 and rule 24A of The Patents (Amendment) Rules, 2006. Any person may file representation by way of opposition to the Controller of Patents at the appropriate office against the grant of the patent in the prescribed manner under section 25(1) of the Patents (Amendment) Act 2005 read with the rule 55 of The Patents (Amendment) Rules, 2006:

(12) PATENT APPLICATION PUBLICATION

(21) Application No.2924/DEL/2015 A

(19) INDIA

(22) Date of filing of Application :16/09/2015

(43) Publication Date : 23/10/2015

(54) Title of the invention : SYSTEM AND METHOD FOR REDUCING EYE STRAIN OF A USER OPERATING A DISPLAY DEVICE

(51) International classification	:G09G5/00
(31) Priority Document No	:NA
(32) Priority Date	:NA
(33) Name of priority country	:NA
(86) International Application No	:NA
Filing Date	:NA
(87) International Publication No	: NA
(61) Patent of Addition to Application Number	:NA
Filing Date	:NA
(62) Divisional to Application Number	:NA
Filing Date	:NA

(71)**Name of Applicant :**

1)HCL Technologies Limited

Address of Applicant :B-39, Sector 1, Noida 201301, Uttar Pradesh, India Uttar Pradesh India

(72)**Name of Inventor :**

1)PARTHASARATHY, Vijay Tiruchengode

(57) Abstract :

The present disclosure relates to system(s) and method(s) for reducing eye strain of a user viewing a display is illustrated. The system is configured for monitoring eyes of a user operating the display to capture gaze data of the user and analyzing the gaze data to determine an eye blink rate and an eye movement rate. Once the gaze data is analyzed, in the next step, the system is configured for determining abnormality in the eyes using a normal eye blink threshold range and a normal eye movement threshold range. Further, the method comprises recommending to the user, over the display, one or more eye blinking exercises or eye movement exercises based on the abnormality in the eyes, thereby facilitating reduction of eyestrain of the user.

No. of Pages : 17 No. of Claims : 9

(12) PATENT APPLICATION PUBLICATION
(19) INDIA
(22) Date of filing of Application :30/09/2015
(21) Application No.9035/DELNP/2015 A
(43) Publication Date : 23/10/2015

(54) Title of the invention : AIR CONDITIONING UNIT

(51) International classification :F24F13/26,F24F1/01,F24F13/24
(31) Priority Document No :2013/0144
(32) Priority Date :05/03/2013
(33) Name of priority country :Belgium
(86) International Application No :PCT/EP2014/053677
Filing Date :26/02/2014
(87) International Publication No:WO 2014/135406
(61) Patent of Addition to Application Number :NA
Filing Date :NA
(62) Divisional to Application Number :NA
Filing Date :NA

(71)**Name of Applicant :**
1)W PROPERTIES
Address of Applicant :Rue Joseph Brand 123, B- 1030 Bruxelles Belgium
(72)**Name of Inventor :**
1)BUNIS, Dan Alexandru

(57) Abstract :
The present invention relates to an air conditioning unit comprising a conditioned primary air intake pipe (1) connected to the inlet of a first Venturi -type device the aspiration of which communicates with a first secondary air intake pipe (9,) the outlet from the first Venturi- type device communicating with the inlet of a second Venturi- type device the aspiration of which is connected to a second secondary air intake pipe (11) comprising a main heat exchanger (8).

No. of Pages : 17 No. of Claims : 14

(12) PATENT APPLICATION PUBLICATION
(19) INDIA
(22) Date of filing of Application :01/09/2015
(21) Application No.7856/DELNP/2015 A
(43) Publication Date : 23/10/2015

(54) Title of the invention : HYDRAULIC SHOVEL

(51) International classification :E02F9/00
(31) Priority Document No :NA
(32) Priority Date :NA
(33) Name of priority country :NA
(86) International Application No :PCT/JP2015/064641
Filing Date :21/05/2015
(87) International Publication No :WO 2015/147343
(61) Patent of Addition to Application Number :NA
Filing Date :NA
(62) Divisional to Application Number :NA
Filing Date :NA

(71)**Name of Applicant :**
1)KOMATSU LTD.
Address of Applicant :2- 3- 6 ,Akasaka, Minato- ku, Tokyo 107-8414 Japan
(72)**Name of Inventor :**
1)AKITA Yasuyuki
2)ITOU Tatsushi

(57) Abstract :
Provided is a hydraulic shovel in which an engine and an exhaust gas treatment unit can be accurately aligned. The hydraulic shovel is equipped with an engine an exhaust gas treatment unit , a front left pillar (71), a rear left pillar (72) , a plurality of supports (51- 54) , and a center frame (12). The exhaust gas treatment unit treats the exhaust gas from the engine. The plurality of supports (51- 54) support the exhaust gas treatment unit. The engine is mounted to the center frame (12). The center frame (12) has a vertical plate (18). Two of the supports (51 , 52) are fixed on the vertical plate (18).

No. of Pages : 46 No. of Claims : 14

(12) PATENT APPLICATION PUBLICATION
(21) Application No.1232/DEL/2015 A
(19) INDIA
(22) Date of filing of Application :04/05/2015
(43) Publication Date : 23/10/2015

(54) Title of the invention : EFFICIENCY ENHANCEMENT OF BRUSHLESS ELECTRIC VARIABLE TRANSMISSION SYSTEM USING WOUND ROTOR

(51) International classification	:H02P6/00, H02P27/05
(31) Priority Document No	:NA
(32) Priority Date	:NA
(33) Name of priority country	:NA
(86) International Application No	:NA
Filing Date	:NA
(87) International Publication No	: NA
(61) Patent of Addition to Application Number	:NA
Filing Date	:NA
(62) Divisional to Application Number	:NA
Filing Date	:NA

(71)**Name of Applicant :**
1)Aakash Kumar
Address of Applicant :H.No- 50, Village - Sariyapur, P.O.- Agri, District- Bijnor, U.P- 246701 India Uttar Pradesh India
2)Dr. Vivek Shrivastava
(72)**Name of Inventor :**
1)Aakash Kumar
2)Dr. Vivek Shrivastava

(57) Abstract :
This invention relates to improved brushless electric variable transmission (BLEVT), which here includes brushless doubly fed electric variable transmission (BL-DF-EVT) systems. More particularly the invention relates to improved rotor designs. This invented system is used to generate the electrical power for the DC micro grid system and also to full fill the requirements of the power at domestic level at low maintenance cost. The machine principally comprises of a stator, an inner rotor and an outer rotor, discrete windings.

No. of Pages : 15 No. of Claims : 6

(12) PATENT APPLICATION PUBLICATION
(21) Application No.2947/DEL/2015 A
(19) INDIA
(22) Date of filing of Application :18/09/2015
(43) Publication Date : 23/10/2015

(54) Title of the invention : CONVERTIBLE SYRINGE ASSEMBLY

(51) International classification :A61M5/315
(31) Priority Document No :NA
(32) Priority Date :NA
(33) Name of priority country :NA
(86) International Application No :NA
Filing Date :NA
(87) International Publication No : NA
(61) Patent of Addition to Application Number :NA
Filing Date :NA
(62) Divisional to Application Number :NA
Filing Date :NA

(71)**Name of Applicant :**
1)SINGH, Dr. Rana Pratap
Address of Applicant :C/O Mrs. Shanti Singh, Village: Alampur, Post Office (PO): Asanwar, Police Station (PS): Gadwar, District: Ballia- 221701, Uttar Pradesh, India. Uttar Pradesh India
(72)**Name of Inventor :**
1)SINGH, Dr. Rana Pratap

(57) Abstract :
A convertible syringe assembly (10) mainly comprising a barrel (101) for collecting withdrawn fluid, a plunger (102) passing inside the barrel having a plurality of longitudinal spokes (110) around the central axis (10a) of the syringe. A collapsible slot (112) exists in at least one of the spokes (110) that allows lateral movement of the plunger (102) with respect to the central axis (10a). The lateral force on the plunger (102) bends the plunger towards the collapsible slot (112). The reactionary force resists the lateral force on the plunger (102), pushing it back towards the central axis (10a) of barrel of the syringe. This reactionary force is cancelled due to collapsible slot (112), thereby facilitating smooth removal of plunger (102) from barrel (101). The convertible syringe (10) is sealed by plunger cap (113) at the top and by nozzle cap (106) at the bottom, thus converting the syringe into a container.

No. of Pages : 18 No. of Claims : 10

(12) PATENT APPLICATION PUBLICATION
(21) Application No.2948/DEL/2015 A
(19) INDIA
(22) Date of filing of Application :18/09/2015
(43) Publication Date : 23/10/2015

(54) Title of the invention : TEMPLATE PROCESSOR USING RULE CENTRIC APPROACH

(51) International classification :G06Q50/00
(31) Priority Document No :NA
(32) Priority Date :NA
(33) Name of priority country :NA
(86) International Application No :NA
Filing Date :NA
(87) International Publication No : NA
(61) Patent of Addition to Application Number :NA
Filing Date :NA
(62) Divisional to Application Number :NA
Filing Date :NA

(71)**Name of Applicant :**
1)DR.S.SUDHA NIT,TRICHY
Address of Applicant :DEPT.OF EEE, NIT TRICHY, TAMIL NADU-620015 Tamil Nadu India
2)MR.K.RAJBABU NIT,TRICHY`
(72)**Name of Inventor :**
1)DR.S.SUDHA NIT,TRICHY
2)MR.K.RAJBABU NIT,TRICHY

(57) Abstract :
The invention is for a template processor using rule-centric approach based on XML and object-orientation. The isolated independent core components namely (i) dataset (ii) template collection (iii) Object wrapper(s) (iv) .OQDML rules and (v) relationship. OQDML rules represent the OQDML rules defined using 5-tuple <data, wrapper, template, input, -method--ordered list. ThejOj3D_Mj_ schema is designed to meet the objectives of objectrelational design principles namely (i) Dependency injection (ii) Acyclic dependency principle and (iii) Composite reuse principle. Each template defines the document structure along with the static and dynamic template elements involved in forming the complete document. Object wrapper to Data Functional mapping corresponding to the various database schemas is accomplished using Object Data Mapper. Object wrappers act as the communicating agent between diversified datasets and the templates. The model is experimented in a web-based distributed environment using JAVA and tested using a real world dataset of a large-scale engineering enterprise

No. of Pages : 23 No. of Claims : 13

(12) PATENT APPLICATION PUBLICATION
(21) Application No.2949/DEL/2015 A
(19) INDIA
(22) Date of filing of Application :18/09/2015
(43) Publication Date : 23/10/2015

(54) Title of the invention : UNIVERSAL WORKING SHEATH FOR MICRO ENDOSCOPIC ASSISTED SURGERIES OF LUMBAR AND LUMBOSACRAL SPINE

(51) International classification :A61B17/32
(31) Priority Document No :NA
(32) Priority Date :NA
(33) Name of priority country :NA
(86) International Application No :NA
Filing Date :NA
(87) International Publication No : NA
(61) Patent of Addition to Application Number :NA
Filing Date :NA
(62) Divisional to Application Number :NA
Filing Date :NA

(71)**Name of Applicant :**
1)DEEPAK KUMAR JHA
Address of Applicant :DEPARTMENT OF NEUROSOURGERY, IHBAS, DELHI-110095 INDIA Delhi India
(72)**Name of Inventor :**
1)DEEPAK KUMAR JHA

(57) Abstract :
Various types of working sheaths for endoscope assisted or endoscopic surgery for lumbar and lumhosacraLspine are available, Most oflhem;require specialized instrumentS-and telescopes. - procurements of which are beyond the reach of many hospitals in developing countries like India, mainly due to financial reasons. We have designed a universal working sheath which is compatible with rigid straight telesocpe (outer diameter- 4 mm, 0 degree, 18 cm long) available at most of the centres for various surgeries in other specialties. This working sheath is simple, sturdy and is compatible with instruments used in conventional lumbar and lumbosacral surgeries. It may be useful for resource scarce centres of developing countries and can be used with microscope also.

No. of Pages : 19 No. of Claims : 4

(12) PATENT APPLICATION PUBLICATION
(21) Application No.3035/DEL/2015 A
(19) INDIA
(22) Date of filing of Application :24/09/2015
(43) Publication Date : 23/10/2015

(54) Title of the invention : BAREFOOT DETECTION SENSOR

(51) International classification :G01R29/12
(31) Priority Document No :NA
(32) Priority Date :NA
(33) Name of priority country :NA
(86) International Application No :NA
Filing Date :NA
(87) International Publication No : NA
(61) Patent of Addition to Application Number :NA
Filing Date :NA
(62) Divisional to Application Number :NA
Filing Date :NA

(71)**Name of Applicant :**
1)MR. M. ASLAM HUSSAIN
Address of Applicant :DEPARTMENT OF ELECTRICAL ENGINEERING, ALIGARH MUSLIM UNIVERSITY, ALIGARH-202002, U.P. INDIA Uttar Pradesh India
2)MR.ABHINANDAN JAIN
3)PROF. ABU TARIQ
(72)**Name of Inventor :**
1)MR.M. ASLAM HUSSAIN
2)MR.ABHINANDAN JAIN
3)PROF. ABU TARIQ

(57) Abstract :
Certain places like Clinics, Temples and Mosques etc. have restrictions of entering with shoes or socks on the feet. Detection of these is generally done by humans guarding the entry. If there are no guards then passer-bys do not realize there mistake and continue, unaware of the conditions. So to deal with the situation here is presented an electronic system which automatically gives alert in case of detection of shoes or socks which are restricted in place and hence reducing human efforts. The system is small, portable and robust, which detects the bareness of the feet of the passer-by and gives an alert if shoes or socks are detected.

No. of Pages : 7 No. of Claims : 6

(12) PATENT APPLICATION PUBLICATION
(21) Application No.3210/DEL/2015 A
(19) INDIA
(22) Date of filing of Application :06/10/2015
(43) Publication Date : 23/10/2015

(54) Title of the invention : DYNAMICALLY SWITCHING OF COMMUNICATION PROTOCOLS DURING A COMMUNICATION BETWEEN A SERVER AND A COMMUNICATION DEVICE

(51) International classification	:G06F9/46	(71)**Name of Applicant :**
(31) Priority Document No	:NA	**1)HCL Technologies Limited**
(32) Priority Date	:NA	Address of Applicant :B-39, Sector 1, Noida 201 301, Uttar Pradesh, India Uttar Pradesh India
(33) Name of priority country	:NA	(72)**Name of Inventor :**
(86) International Application No	:NA	**1)DHALIWAL, Jasbir Singh**
Filing Date	:NA	
(87) International Publication No	: NA	
(61) Patent of Addition to Application Number	:NA	
Filing Date	:NA	
(62) Divisional to Application Number	:NA	
Filing Date	:NA	

(57) Abstract :
Disclosed is a system for dynamically switching communication protocols during a communication between a centralized server and a communication device is disclosed. A data capturing module captures performance data comprising values associated to a plurality of parameters corresponding to a first communication protocol. A protocol performance analyzer module analyzes the performance data. A signature packet generator module generates a signature packet comprising a unique identifier indicative of a second communication protocol, of the plurality of communication protocols, to be selected for communication. Further, the signature packet generator module transmits the signature packet to the communication device. The protocol switching module enables the communication device to switch from the first communication protocol to the second communication protocol when a value, corresponding to one or more parameters of the plurality of parameters, is less than the predefined value.

No. of Pages : 25 No. of Claims : 11

(12) PATENT APPLICATION PUBLICATION
(21) Application No.3211/DEL/2015 A
(19) INDIA
(22) Date of filing of Application :06/10/2015
(43) Publication Date : 23/10/2015

(54) Title of the invention : SYSTEM AND METHOD FOR REGRESSION TESTING OF A DATA WAREHOUSE

(51) International classification	:G06F11/36	(71)**Name of Applicant :**
(31) Priority Document No	:NA	**1)HCL Technologies Limited**
(32) Priority Date	:NA	Address of Applicant :B-39, Sector 1, Noida 201301, Uttar Pradesh, India Uttar Pradesh India
(33) Name of priority country	:NA	
(86) International Application No	:NA	(72)**Name of Inventor :**
Filing Date	:NA	**1)DHANYAMRAJU, S U M Prasad**
(87) International Publication No	: NA	**2)SURAPARAJU, Rajesh Babu**
(61) Patent of Addition to Application Number	:NA	**3)SANKAR, Muthurajan Karthikeya**
Filing Date	:NA	
(62) Divisional to Application Number	:NA	
Filing Date	:NA	

(57) Abstract :
The present disclosure relates to system(s) and method(s) for regression testing of software code is disclosed, wherein the software code is configured to perform ETL (Extract, transform, and Load) processing steps on source data. The system is configured for generating a first target table based upon execution of the software code on the source data and record a first count of one or more types of data records in a first target table. Further, the system is configured for generating a second target table based upon execution of the software code, being updated, on the source data. Further, the system is configured to record a second count of the one or more types of data records in a second target table. Further, the system is configured to compare the first count and the second count corresponding to each type of data record for facilitating regression testing of the software code.

No. of Pages : 18 No. of Claims : 11

(12) PATENT APPLICATION PUBLICATION
(21) Application No.3212/DEL/2015 A
(19) INDIA
(22) Date of filing of Application :06/10/2015
(43) Publication Date : 23/10/2015

(54) Title of the invention : AN AIR COOLING SYSTEM

(51) International classification :F01P3/12
(31) Priority Document No :NA
(32) Priority Date :NA
(33) Name of priority country :NA
(86) International Application No :NA
Filing Date :NA
(87) International Publication No : NA
(61) Patent of Addition to Application Number :NA
Filing Date :NA
(62) Divisional to Application Number :NA
Filing Date :NA

(71)**Name of Applicant :**
1)HCL Technologies Limited
Address of Applicant :B-39, Sector 1, Noida 201301, Uttar Pradesh, India Uttar Pradesh India
(72)**Name of Inventor :**
1)SRINIVAS PRABHAKAR, Mithun

(57) Abstract :
Disclosed is an air cooling system for cooling a room at lower operational cost. In one aspect, the air cooling system comprises a primary water cooling system for cooling water based on a vapor compression refrigeration methodology and a secondary cooling system for cooling a room utilizing the cold water. The primary cooling system further comprises a liquid line coil for cooling the water based on heat transfer. Further, during operation the liquid line is configured to receive a liquid refrigerant. The secondary cooling system further comprises a container containing water, a pump and an evaporator for cooling ambient air in a room. Further, during operation the water in the container is cooled due to the liquid refrigerant flowing liquid line. Upon cooling, the cold water is pumped by the pump into the evaporator for cooling a room.

No. of Pages : 11 No. of Claims : 10

(12) PATENT APPLICATION PUBLICATION
(21) Application No.2923/DEL/2015 A
(19) INDIA
(22) Date of filing of Application :16/09/2015
(43) Publication Date : 23/10/2015

(54) Title of the invention : DEVICE AND METHOD FOR REAL-TIME PROCESSING OF A SPEECH DELIVERED BY A SPEAKER

(51) International classification :G10L11/04
(31) Priority Document No :NA
(32) Priority Date :NA
(33) Name of priority country :NA
(86) International Application No :NA
Filing Date :NA
(87) International Publication No : NA
(61) Patent of Addition to Application Number :NA
Filing Date :NA
(62) Divisional to Application Number :NA
Filing Date :NA

(71)**Name of Applicant :**
1)HCL Technologies Limited
Address of Applicant :B-39, Sector 1, Noida 201301, Uttar Pradesh, India Uttar Pradesh India
(72)**Name of Inventor :**
1)DHALIWAL, Jasbir Singh

(57) Abstract :
Disclosed is a device for processing a speech delivered by a speaker. A voice analyzer receives an audio stream, comprising multiple pronounced words, indicating a speech delivered by a speaker. The audio stream may be received from an audio input device. The voice analyzer converts the multiple pronounced words into a textual format in real-time. The comparator matches each pronounced word with a word, of the plurality of words, corresponding to a pronounced word, of the multiple pronounced words, in order to identify one or more additional words and at least one pronounced word matched with at least one word, of the set of words, having the metadata. A voice synthesizer and a gesture synthesizer process the speech by eliminating one or more additional words and generating a trigger, indicating the speaker to perform a gesture, respectively.

No. of Pages : 21 No. of Claims : 10

(12) PATENT APPLICATION PUBLICATION
(21) Application No.2808/DEL/2015 A
(19) INDIA
(22) Date of filing of Application :08/09/2015
(43) Publication Date : 23/10/2015

(54) Title of the invention : BATTERY TEMPERATURE WARNING INDICATOR

(51) International classification :G01R31/36
(31) Priority Document No :NA
(32) Priority Date :NA
(33) Name of priority country :NA
(86) International Application No :NA
Filing Date :NA
(87) International Publication No : NA
(61) Patent of Addition to Application Number :NA
Filing Date :NA
(62) Divisional to Application Number :NA
Filing Date :NA

(71)**Name of Applicant :**
1)JAY ACE TECHNOLOTIES LIMITED
Address of Applicant :A-9, ASHOK VIHAR, PHASE-1, NEAR POST OFFICE, DELHI-110052 INDIA Delhi India
(72)**Name of Inventor :**
1)RAJESH SINGH
2)ARUN KUMAR SHARMA
3)DEEPAK KUMAWAT
4)ALOK KUMAR
5)PRITOSH SINGH

(57) Abstract :
The present subject matter relates to a battery temperature warning indicator for automotive vehicles that includes a battery operating with an. electronic circuit structure wherein the electronic circuit structure is provided with a thermistor placed beside the battery to sense the temperature of the battery. The thermistor generate analog input signals in terms of thermistor resistance which are subsequently converted by a resistor divider to electrical signal. The electronic circuit structure is also provided with a zener diode to compare the electrical signal to a reference voltage to accordingly initiate a transistor to trigger the battery temperature indicator via a light emitting diode in a vehicle information display instrument. The said indication may also be evident from an audible warning that can be heard by the rider.

No. of Pages : 15 No. of Claims : 9

(12) PATENT APPLICATION PUBLICATION
(21) Application No.2964/DEL/2015 A
(19) INDIA
(22) Date of filing of Application :18/09/2015
(43) Publication Date : 23/10/2015

(54) Title of the invention : A SYSTEM AND METHOD FOR MONITORING ON-BOARDING ANDOFF-BOARDING PROCESS IN AN ORGANIZATION

(51) International classification :G06F21/00
(31) Priority Document No :NA
(32) Priority Date :NA
(33) Name of priority country :NA
(86) International Application No :NA
Filing Date :NA
(87) International Publication No : NA
(61) Patent of Addition to Application Number :NA
Filing Date :NA
(62) Divisional to Application Number :NA
Filing Date :NA

(71)**Name of Applicant :**
1)HCL Technologies Limited
Address of Applicant :B-39, Sector 1, Noida 201 301, Uttar Pradesh, India Uttar Pradesh India
(72)**Name of Inventor :**
1)NATARAJAN, Ambika
2)ACHARYA, Binaya Chandra
3)BOSE, Deepak

(57) Abstract :
The present disclosure relates to system(s) and method(s) for monitoring on-boarding and off-boarding process in an organization is illustrated. The system maintains a task repository storing a set of on-boarding tasks and a set of off-boarding tasks. Further, the system identifies a process to be performed by a user, wherein the process is one of on-boarding process or an off-boarding process. Further, the system determines a role of the user in the organization and selects an on-boarding task or an off-boarding task based on the role and process associated with the user. Further, the system enables a web based platform for the user to perform the on-boarding task or off-boarding task. Furthermore, the system generates an activity report comprising a record of the on-boarding task or the off-boarding task performed by the user.

No. of Pages : 18 No. of Claims : 9

(12) PATENT APPLICATION PUBLICATION
(21) Application No.3015/DEL/2015 A
(19) INDIA
(22) Date of filing of Application :23/09/2015
(43) Publication Date : 23/10/2015

(54) Title of the invention : LOTTE SUUTRCHKRM (DHAGA KATAI) YARN SPINNING

(51) International classification :D01B7/04
(31) Priority Document No :NA
(32) Priority Date :NA
(33) Name of priority country :NA
(86) International Application No :NA
Filing Date :NA
(87) International Publication No : NA
(61) Patent of Addition to Application Number :NA
Filing Date :NA
(62) Divisional to Application Number :NA
Filing Date :NA

(71)**Name of Applicant :**
1)GSL Exports Pvt. Ltd
Address of Applicant :C-19 Phase-1 Focal Point Ludhiana-141010 Punjab India Punjab India
(72)**Name of Inventor :**
1)Ghansham Singh
2)Lakhvir Singh

(57) Abstract :
Yarn spinning Lotte Suutrchkrm • method comprising feeding and drafting of roving raw material; twisting; and cop formation. Feeding and drafting of roving of raw material comprises hanging on creel of ring frame with slightly pulling to a roving bobbin into a moveable holder fitted on creel of a ring frame, manual feeding of roving end through a roving guide to a back feed roller, said back feed roller to a second draft roller (middle roller) and main draft (stretch) for the required count between said second and a front roller with a bottom apron and a top cradle apron which is derived by the middle roller.

No. of Pages : 11 No. of Claims : 8

(12) PATENT APPLICATION PUBLICATION
(21) Application No.3076/DEL/2015 A
(19) INDIA
(22) Date of filing of Application :28/09/2015
(43) Publication Date : 23/10/2015

(54) Title of the invention : PORTABLE REFRIGIRANT CHARGE MONITORING DEVICE

(51) International classification :G06F15/00
(31) Priority Document No :NA
(32) Priority Date :NA
(33) Name of priority country :NA
(86) International Application No :NA
Filing Date :NA
(87) International Publication No : NA
(61) Patent of Addition to Application Number :NA
Filing Date :NA
(62) Divisional to Application Number :NA
Filing Date :NA

(71)**Name of Applicant :**
1)DR.JYOTIRMAY MATHUR
Address of Applicant :CENTRE FOR ENERGY AND ENVIRONMENT, MALVIYA NATIONAL INSTITUTE OF TECHNOLOGY, JAIPUR, RAJASTHAN-302017, INDIA. Rajasthan India
2)UJJWAL SINGH RAO
(72)**Name of Inventor :**
1)DR.JYOTIRMAY MATHUR
2)UJJWAL SINGH RAO

(57) Abstract :
The invention is a low cost, user friendly and non-intrusive, portable refrigerant charge to refrigerant charging level in small, and unitary.air-conditioning units the working of this product lies with identification of point of phase change of refrigerant used, which in turn through psychometric charts and geometric and construction details of refrigerant circuit can give the amount of refrigerant present at any point of time with less than 5% error. The product is cost efficient and It relies on the basic measured values of temperature, tube/pipe design and the rated charge value given by the manufacturer making it robust and suitable for all types of air conditioners and heat pumps present today.

No. of Pages : 22 No. of Claims : 6

(12) PATENT APPLICATION PUBLICATION
(21) Application No.3083/DEL/2015 A
(19) INDIA
(22) Date of filing of Application :28/09/2015
(43) Publication Date : 23/10/2015

(54) Title of the invention : TEXTURE BASED VOLUME ESTIMATION OF TUMORS

(51) International classification	:G06T7/40	(71)**Name of Applicant :**
(31) Priority Document No	:NA	**1)MIR,AJAZ HUSSAIN**
(32) Priority Date	:NA	Address of Applicant :DEPARTMENT OF ELECTRONICS & COMMUNICATION ENGG., NATIONAL INSTITUTE OF TECHNOLOGY, SRINAGAR (J&K) INDIA-190006 Jammu & Kashmir India
(33) Name of priority country	:NA	
(86) International Application No	:NA	
Filing Date	:NA	
(87) International Publication No	: NA	**2)SHOAIB AMIN,BANDAY**
(61) Patent of Addition to Application Number	:NA	(72)**Name of Inventor :**
Filing Date	:NA	**1)MIR,AJAZ HUSSAIN**
(62) Divisional to Application Number	:NA	**2)SHOAIB AMIN,BANDAY**
Filing Date	:NA	

(57) Abstract :
The treatment planning, surgical planning and dose estimation of the abnormal tissues and lesion is barred by the lack of a well-established tumor volume calculation technique noninvasive from the patients dataset. The technique that is being commonly used for estimation of volume of abnormalities is the ABC/2 method. This method however is not exact and just gives the bounding box volume for the tumor. It is simple but its efficacy is limited by intraobserver variability. To address issues like accuracy, level of trained intervention, time for computation and complexity for the calculation of volume of tumors and others abnormal tissues or lesions, we have developed a method which is a semi-automatic (single user initialization), non-invasive, accurate and fast with least intervention from a well-trained radiologist. We traced exact boundaries of tumors slice by slice automatically by utilizing the fused low and high frequency components embedded in an image which consequently was used in surveyors algorithm for the calculation of volume of tumors, cysts, clots and other abnormal tissues and lesions.

No. of Pages : 9 No. of Claims : 4

(12) PATENT APPLICATION PUBLICATION
(21) Application No.3084/DEL/2015 A
(19) INDIA
(22) Date of filing of Application :28/09/2015
(43) Publication Date : 23/10/2015

(54) Title of the invention : A NATURAL EXTRACT BASED POLYMERIC PRODRUG FOR SUSTAINING THE RELEASE OF A DRUG

(51) International classification :C08L73/02
(31) Priority Document No :NA
(32) Priority Date :NA
(33) Name of priority country :NA
(86) International Application No :NA
Filing Date :NA
(87) International Publication No : NA
(61) Patent of Addition to Application Number :NA
Filing Date :NA
(62) Divisional to Application Number :NA
Filing Date :NA

(71)**Name of Applicant :**
1)GUPTA,PUNEET
Address of Applicant :AMITY INSTITUTE OF PHARMACY,AMITY UNIVERSITY,SECTOR-125, NOIDA,INDIA Uttar Pradesh India
2)SINGH,NEELAM
3)KHOSA,RATAN LAL
4)ANNAMALAI PANDURANGAN
5)KULKARNI,GIRIRAJ,T.
(72)**Name of Inventor :**
1)GUPTA,PUNEET
2)SINGH,NEELAM
3)KHOSA,RATAN LAL
4)ANNAMALAI PANDURANGAN
5)KULKARNI, GIRIRAJ. T.

(57) Abstract :
The present invention relates to a natural extract based polymeric prodrug formulation for the oral sustained delivery of the drug. Particularly, the invention provides Prunus amygdalus (sweet almond) polysaccharide based polymeric prodrug formulation comprising Ceftriaxone drug for the oral route of administration.

No. of Pages : 15 No. of Claims : 8

(12) PATENT APPLICATION PUBLICATION
(21) Application No.2960/DEL/2015 A
(19) INDIA
(22) Date of filing of Application :18/09/2015
(43) Publication Date : 23/10/2015

(54) Title of the invention : SYSTEM AND METHOD FOR REAL-TIME MEMORY DIAGNOSTICS

(51) International classification	:G06F11/26	(71)**Name of Applicant :**
(31) Priority Document No	:NA	**1)HCL Technologies Limited**
(32) Priority Date	:NA	Address of Applicant :B-39, Sector 1, Noida 201 301, Uttar Pradesh, India Uttar Pradesh India
(33) Name of priority country	:NA	
(86) International Application No	:NA	(72)**Name of Inventor :**
Filing Date	:NA	**1)SHARMA, Ajay Kumar**
(87) International Publication No	: NA	**2)PRASHAR, Monika**
(61) Patent of Addition to Application Number	:NA	
Filing Date	:NA	
(62) Divisional to Application Number	:NA	
Filing Date	:NA	

(57) Abstract :
The present disclosure relates to system(s) and method(s) for runtime diagnostics of memory is disclosed. The system comprises a memory unit, a processor coupled to the memory unit and the memory. Initially, the processor is configured to execute programmed instructions stored in a memory unit for identifying a set of memory blocks from the memory that are not occupied by a Direct Memory Access (DMA) operation performed in the memory 208. Further, the processor is configured to identify a set of corrupted memory blocks from the set of memory blocks based upon a predefined pattern. Furthermore, the processor is configured to generate alerts to change a set of memory modules in the memory that are associated with the set of corrupted memory blocks, wherein the alerts are generated based on the number of corrupted memory blocks.

No. of Pages : 18 No. of Claims : 9

(12) PATENT APPLICATION PUBLICATION
(21) Application No.2596/DEL/2014 A
(19) INDIA
(22) Date of filing of Application :10/09/2014
(43) Publication Date : 23/10/2015

(54) Title of the invention : IMPROVED SWITCHING METHOD AND THE VEHICULAR SWITCHES

(51) International classification	:E01B7/02	(71)**Name of Applicant :**
(31) Priority Document No	:NA	**1)MINDARIKA PRIVATE LIMITED**
(32) Priority Date	:NA	Address of Applicant :VILLAGE NAWADA FATEHPUR,
(33) Name of priority country	:NA	P.O. SIKANDERPUR BADDA, DISTT. GURGAON,
(86) International Application No	:NA	HARYANA - 122004 Delhi India
Filing Date	:NA	(72)**Name of Inventor :**
(87) International Publication No	: NA	**1)ARUN KUMAR ARORA**
(61) Patent of Addition to Application Number	:NA	**2)MANOJ KUMAR JINDAL**
Filing Date	:NA	
(62) Divisional to Application Number	:NA	
Filing Date	:NA	

(57) Abstract :
The present invention provides an improved switching method for vehicular switches. The vehicular switch comprises a case, shaft, magnet sub assembly, PCB sub assembly, spring and housing. In order to solve the problem of miss-triggering by early detection which leads to switching point inaccuracy, the present invention provides an improved switching method and vehicular switch assembly in which a rectangular magnet with the magnetic axis in the direction of magnet sliding, moves from initial position to X-mm early the intermediate position. Now as the north pole of the magnet is towards the unipolar sensor which senses only south pole of the magnet, will not be detecting the north pole magnetic field of the magnet.

No. of Pages : 36 No. of Claims : 15

(12) PATENT APPLICATION PUBLICATION
(21) Application No.3096/DEL/2015 A
(19) INDIA
(22) Date of filing of Application :29/09/2015
(43) Publication Date : 23/10/2015

(54) Title of the invention : FUEL TANK DOOR WARNING INDICATOR

(51) International classification :B60K15/05
(31) Priority Document No :NA
(32) Priority Date :NA
(33) Name of priority country :NA
(86) International Application No :NA
Filing Date :NA
(87) International Publication No : NA
(61) Patent of Addition to Application Number :NA
Filing Date :NA
(62) Divisional to Application Number :NA
Filing Date :NA

(71)**Name of Applicant :**
1)JNS INSTRUMENTS LIMITED
Address of Applicant :PLOT NO.4, SECTOR-3, IMT MANESAR, GURGAON Haryana India
(72)**Name of Inventor :**
1)RAJESH SINGH
2)ARUN KUMAR SHARMA
3)ISHWAR SINGH

(57) Abstract :
The present subject matter relates to a fuel tank door warning indicator for automotive vehicles that basically includes a fuel tank to receive fuel via a fuel inlet, a thread ended cylindrical tube inserted into the fuel inlet, a fuel filler cap screwed on the thread ended cylindrical tube and a fuel tank door pivotally connected to an extended portion of the thread ended cylindrical tube to cover the fuel filler cap and the fuel tank. The present subject matter uniquely discloses a locking device projected as a movable protrusion integral to the inner surface of a lock plate provided with the fuel tank wherein the locking device hooks on a protrusion formed on the inner surface of the fuel tank door. Further, the arrangement is also provided with a plunger body structured on interior of the lock plate in a way that the locking device and the plunger body gets pushed by a ball type extrusion on closing the fuel tank door wherein the fuel tank door warning indicator is actuated if the plunger body remains non-pushed after closing the fuel tank door. The present subject matter discloses a reliable, compact, less costly and a customers friendly indicates unclosed or partially closed fuel tank door warning indicator for automotive vehicles.

No. of Pages : 19 No. of Claims : 10

(12) PATENT APPLICATION PUBLICATION
(21) Application No.2909/DEL/2015 A
(19) INDIA
(22) Date of filing of Application :16/09/2015
(43) Publication Date : 23/10/2015

(54) Title of the invention : EMBEDDED SYSTEM DESIGN FOR PREVENTING OPERATIONS OF OVERLOADED VEHICLE AND A TECHNOLOGY TO MEASURE WEIGHT

(51) International classification :B60N2/28
(31) Priority Document No :NA
(32) Priority Date :NA
(33) Name of priority country :NA
(86) International Application No :NA
Filing Date :NA
(87) International Publication No : NA
(61) Patent of Addition to Application Number :NA
Filing Date :NA
(62) Divisional to Application Number :NA
Filing Date :NA

(71)**Name of Applicant :**
1)GIRISH PAL
Address of Applicant :RZF 761/9, GALI NO 4, RAJ NAGAR-II, PALAM COLONY, NEW DELHI-110077 Delhi India
2)RINKU SAINI
3)SUNIL YADAV
4)AJAY KUMAR
5)GAURAV
(72)**Name of Inventor :**
1)GIRISH PAL
2)RINKU SAINI
3)SUNIL YADAV
4)AJAY KUMAR
5)GAURAV

(57) Abstract :
An embedded system device having weight sensor, which resides on vehicle all the time to measure the weight (load) of the vehicle and provide a way to stop vehicle engine and various systems in overload condition, via relays and electromagnetic . vaJves activated /deactivated by the microcontroller/microprocessor. A weighting sensor unit is placed between the chassis 1 and axle 2 of the vehicle as shown in fig. 8 connected to the control unit. (The load must be equally distributed on the loading area of the vehicle, and the vehicle needs to be standing on a leveled surface). When the system is started by switching on the vehicle and pressing the push button connected across limit switch 3, it keeps measuring the weight according to the change in distance between chassis 1 and axle 2 until the vehicle is in standing position. When the vehicle is in motion the system waits utile the vehicle comes in rest position, and again measures the weight of the vehicle. If more weight is placed on the vehicle loading area when the engine is running, then our system turns off the various systems of vehicle via relay, electromagnetic valves etc. The vehicle will run only in under load condition. The best method to use the given invention to prevent operation of overload vehicle is described in the description.

No. of Pages : 24 No. of Claims : 8

(12) PATENT APPLICATION PUBLICATION
(19) INDIA
(22) Date of filing of Application :24/09/2015
(21) Application No.2784/MUMNP/2015 A
(43) Publication Date : 23/10/2015

(54) Title of the invention : AUDIO PROCESSING SYSTEM

(51) International classification	:G10L19/008,G10L19/20,G10L19/04
(31) Priority Document No	:61/809,019
(32) Priority Date	:05/04/2013
(33) Name of priority country	:U.S.A.
(86) International Application No	:PCT/EP2014/056857
Filing Date	:04/04/2014
(87) International Publication No	:WO 2014/161996
(61) Patent of Addition to Application Number	:NA
Filing Date	:NA
(62) Divisional to Application Number	:NA
Filing Date	:NA

(71)**Name of Applicant :**
1)DOLBY INTERNATIONAL AB
Address of Applicant :Apollo Building 3E Herikerbergweg 1 35 NL 1101 CN Amsterdam, Netherlands. Netherlands
(72)**Name of Inventor :**
1)KJOERLING Kristofer
2)PURNHAGEN Heiko
3)VILLEMOES Lars

(57) Abstract :
An audio processing system (100) comprises a front end component (102 103) which receives quantized spectral components and performs an inverse quantization yielding a time domain representation of an intermediate signal. The audio processing system further comprises a frequency domain processing stage (104 105 106 107 108) configured to provide a time domain representation of a processed audio signal and a sample rate converter (109) providing a reconstructed audio signal sampled at a target sampling frequency. The respective internal sampling rates of the time domain representation of the intermediate audio signal and of the time domain representation of the processed audio signal are equal. In particular embodiments the processing stage comprises a parametric upmix stage which is operable in at least two different modes and is associated with a delay stage that ensures constant total delay.

No. of Pages : 81 No. of Claims : 15

(12) PATENT APPLICATION PUBLICATION
(21) Application No.2601/MUM/2014 A
(19) INDIA
(22) Date of filing of Application :12/08/2014
(43) Publication Date : 23/10/2015

(54) Title of the invention : INTERLOCKING NAIL

(51) International classification	:F16B15/04	(71)**Name of Applicant :**
(31) Priority Document No	:NA	**1)TANDIYA, Dr. Nitesh Kumar**
(32) Priority Date	:NA	Address of Applicant :c/o Dr. Jagan Singh Awasya, 74-Veer-Sawarkar Nagar, Near Cat Road, New Reti Mandi, Indore-452012, Madhya Pradesh, India. Madhya Pradesh India
(33) Name of priority country	:NA	
(86) International Application No	:PCT//	
Filing Date	:01/01/1900	(72)**Name of Inventor :**
(87) International Publication No	: NA	**1)TANDIYA, Dr. Nitesh Kumar**
(61) Patent of Addition to Application Number	:NA	
Filing Date	:NA	
(62) Divisional to Application Number	:NA	
Filing Date	:NA	

(57) Abstract :
ABSTRACT INTERLOCKING NAIL The invention relates to an interlocking nail (10) for fixation of transverse and short spiral fractures of, long bone, particularly shaft of the femur, tibia and humerus, having Graft extrusion space/slot (101) for holding stem cells graft and 4 or 5 holes for putting interlocking bolts from lateral to medial direction. Constant compression achieved (irrespective of weight bearing cycle) at the fracture site by tightening of the Endo-Compression Screws (108, 109 and110) results in stimulation of stem cells and reduction in bone gap, thus enhances bone healing and union manifolds. Fig 1 (a)

No. of Pages : 19 No. of Claims : 14

(12) PATENT APPLICATION PUBLICATION
(21) Application No.3751/MUM/2015 A
(19) INDIA
(22) Date of filing of Application :01/10/2015
(43) Publication Date : 23/10/2015

(54) Title of the invention : WIRE ROPE LIFTING SYSTEM

(51) International classification	:B66D 3/18
(31) Priority Document No	:NA
(32) Priority Date	:NA
(33) Name of priority country	:NA
(86) International Application No	:NA
Filing Date	:NA
(87) International Publication No	: NA
(61) Patent of Addition to Application Number	:NA
Filing Date	:NA
(62) Divisional to Application Number	:NA
Filing Date	:NA

(71)**Name of Applicant :**
1)Patel Jaydeep Rameshbhai
Address of Applicant :B/301 Greenvilla Apt., Ghatlodia, Ahmedabad-380061 Gujarat, India. Gujarat India
(72)**Name of Inventor :**
1)Patel Jaydeep Rameshbhai

(57) Abstract :
A wire rope lifting system comprises a base structure (2) for supporting a platform deck (3) that receives object being lifted, a lifting assembly (4) for vertically lifting the platform deck (3) through wire ropes (W1..W4) comprising couple of single pulleys (18, 21), couple of double pulleys (19, 22), hydraulically operated cylinder (24) having piston rod (25) and couple of traction pulleys (20, 23). Each said wire rope is clamped at the top of each vertical post and another end is anchored with the platform deck. Said platform deck (3) is lifted at a height twice to the extended length of the piston rod (25) from hydraulic cylinder (24). After being reached in elevated position, said platform deck (3) is fixed through solenoid locking system to hold the platform deck (3) in elevated position. Further, said platform deck (3) is imparted in lower position by releasing pressure inside cylinder.

No. of Pages : 27 No. of Claims : 10

(12) PATENT APPLICATION PUBLICATION
(19) INDIA
(22) Date of filing of Application :10/10/2015
(21) Application No.3858/MUM/2015 A
(43) Publication Date : 23/10/2015

(54) Title of the invention : PROCESS FOR PREPARATION OF PARENTERAL FORMULATION OF MICAFUNGIN SODIUM

(51) International classification	:A61K 31/375
(31) Priority Document No	:NA
(32) Priority Date	:NA
(33) Name of priority country	:NA
(86) International Application No	:NA
Filing Date	:NA
(87) International Publication No	: NA
(61) Patent of Addition to Application Number	:NA
Filing Date	:NA
(62) Divisional to Application Number	:NA
Filing Date	:NA

(71)**Name of Applicant :**
1)GUFIC BIOSCIENCES LIMITED
Address of Applicant :N.H.No.8, Near Grid, Kabilpore 396 424, Navsari, Gujarat India. Gujarat India
(72)**Name of Inventor :**
1)PATEL, Mitesh Natavarlal
2)DAVE, Mafatlal Tribhovandas
3)CHOKSI, Pranavkumar Jayesh

(57) Abstract :
The present invention discloses stable freeze dried pharmaceutical formulations of Micafungin which comprises Micafungin sodium; a suitable stabilizing agent and alkalizing agent, for parenteral administration, wherein, the formulation is devoid of polysaccharide and disaccharide. The pharmaceutical formulation provides sufficient stabilization of Micafungin sodium thus improving the shelf life of the product during storage.

No. of Pages : 13 No. of Claims : 12

(12) PATENT APPLICATION PUBLICATION
(21) Application No.5129/CHE/2014 A
(19) INDIA
(22) Date of filing of Application :13/10/2014
(43) Publication Date : 23/10/2015

(54) Title of the invention : A SOCIAL NETWORKING SYSTEM AND METHOD.FOR PROVIDING EMPOWERMENT SERVICES TO THE WOMEN

(51) International classification :G06Q
(31) Priority Document No :NA
(32) Priority Date :NA
(33) Name of priority country :NA
(86) International Application No :NA
Filing Date :NA
(87) International Publication No : NA
(61) Patent of Addition to Application Number :NA
Filing Date :NA
(62) Divisional to Application Number :NA
Filing Date :NA

(71)**Name of Applicant :**
1)SAINATH TALLURI
Address of Applicant :D.NO. 3-1-341, FLAT NO.413, C-BLOCK, GOLDEN HOMES, KRISHNA NAGAR, GUNTUR - 522 006 Andhra Pradesh India
2)VENKATA CHANDRASEKHAR MUTHOJU
3)NAGARI ANITANAND
(72)**Name of Inventor :**
1)SAINATH TALLURI

(57) Abstract :
Exemplary embodiments of the present disclosure are directed towards a system and method for providing empowerment services to the women. The system comprises of a registering unit configured to transmit a registration information request to the computing device based on category of user, a profile creating unit configured to create a user profile based on the registration information provided by the user at the registration unit, an assistance providing unit configured to provide required services to the registered user based on a posted query of-the registered user; and a social networking unit may configured to enable the users to interact with each other for creating. awareness among themselyes an advertisements collecting unit may be configured to enable the users and product owners to post their product advertisements, a dash board unit configured to provide a view of their status of tasks performed in the social networking system for better understanding, an administration analytics unit ..configured to provide different levels of login access to the user to manage privileges and an opinion providing unit configured to allow the user to provide their opinion on viewing the content.

No. of Pages : 26 No. of Claims : 15

(12) PATENT APPLICATION PUBLICATION
(21) Application No.6046/CHENP/2015 A
(19) INDIA
(22) Date of filing of Application :06/10/2015
(43) Publication Date : 23/10/2015

(54) Title of the invention : SYSTEMS AND METHODS FOR EXERTING FORCE ON BODIES

(51) International classification	:A61F 5/01, A61F 5/03
(31) Priority Document No	:61/773154
(32) Priority Date	:06/03/2013
(33) Name of priority country	:U.S.A.
(86) International Application No	:PCT/US2014/021448
Filing Date	:06/03/2014
(87) International Publication No	:WO 2014/138504
(61) Patent of Addition to Application Number	:NA
Filing Date	:NA
(62) Divisional to Application Number	:NA
Filing Date	:NA

(71)**Name of Applicant :**
1)DEVANABOYINA Udaya Sankar
Address of Applicant :34313 Xanadu Terrace Fremont CA 94555 U.S.A.
(72)**Name of Inventor :**
1)DEVANABOYINA Udaya Sankar

(57) Abstract :
Systems and methods for exerting forces on a body including a support structure defining a space and a plurality of surface contacting units that are configured to exert force upon the body such that the weight is distributed away from the primary weight bearing regions to non weight bearing regions of the body or vice versa without exerting significant shear or frictional forces on surfaces of the body. The systems and methods may be used to exert forces to cause fluid shift in different compartments of the body. Applications include treatment of various disease conditions including pressure ulcers heart failure high blood pressure preeclampsia osteoporosis injuries of spine and to slow microgravity induced bone and muscle loss. The systems and methods may be used to simulate gravity weightlessness or buoyancy in rehabilitation medicine. The system may include a chair bed a wearable suit or an exoskeleton.

No. of Pages : 190 No. of Claims : 180

(12) PATENT APPLICATION PUBLICATION
(21) Application No.5309/CHE/2015 A
(19) INDIA
(22) Date of filing of Application :05/10/2015
(43) Publication Date : 23/10/2015

(54) Title of the invention : HERBAL BASED BIO-POLYMERIC CROSS LINKED HYDROGEL COMPOSITION

(51) International classification :A61K36/00
(31) Priority Document No :NA
(32) Priority Date :NA
(33) Name of priority country :NA
(86) International Application No :NA
Filing Date :NA
(87) International Publication No : NA
(61) Patent of Addition to Application Number :NA
Filing Date :NA
(62) Divisional to Application Number :NA
Filing Date :NA

(71)**Name of Applicant :**
1)Dayananda Sagar College of Engineering
Address of Applicant :Department of Biotechnology, Shavige Malleshwara Hills, Kumara Swamy Layout, Bengaluru. Karnataka India
(72)**Name of Inventor :**
1)Honnenahalli Narayan Madhu
2)Sudhanva Madhavrao Desai
3)Dr.Kiran Sundera Raja Rao
4)Manasa Veerabhadrappa Anand
5)Priyanka Bhansali
6)Apoorva Sneha Ravi
7)Suma Ravi
8)Anushree Sridhar

(57) Abstract :
The present invention relates generally to cross linked hydrogels, specifically to herbal based bio-polymeric cross linked hydrogel composition for bone dressing, sweat absorption and skin care applications. More specifically, the present invention relates to stable bio-polymeric films (BF) with sustained release of herbal extracts from biodegradable polymer Poly Vinyl Alcohol (PVA). The herbal based bio-polymeric cross linked hydrogel composition comprising of: aqueous solution of biodegradable polymer Poly Vinyl Alcohol (PVA) - 2 to 12 (g) weight %; and blending agents, said blending agents are herbal extracts that include Turmeric extract - 2 to 4 (g); and Cissusquadrangularis extract - 8 to 10 (ml). The blending agents enhance stability of the hydrogel and biocompatibility.

No. of Pages : 47 No. of Claims : 8

(12) PATENT APPLICATION PUBLICATION
(21) Application No.5338/CHE/2015 A
(19) INDIA
(22) Date of filing of Application :06/10/2015
(43) Publication Date : 23/10/2015

(54) Title of the invention : METHOD AND APPARATUS FOR NON-DESTRUCTIVE TESTING OF COMPOSITES USING PLANAR SENSOR

(51) International classification	:G01N	(71)**Name of Applicant :**
(31) Priority Document No	:NA	**1)MALATHI KANAGASABAI**
(32) Priority Date	:NA	Address of Applicant :DEPARTMENT OF ELCTRONICS
(33) Name of priority country	:NA	AND COMMUNICATION ENGINEERING, ANNA
(86) International Application No	:NA	UNIVERSITY, CHENNAI - 600 025, Tamil Nadu India
Filing Date	:NA	**2)VIMAL SAMSINGH R**
(87) International Publication No	: NA	**3)ESTHER FLORENCE S**
(61) Patent of Addition to Application Number	:NA	(72)**Name of Inventor :**
Filing Date	:NA	**1)MALATHI KANAGASABAI**
(62) Divisional to Application Number	:NA	**2)VIMAL SAMSINGH R**
Filing Date	:NA	**3)ESTHER FLORENCE S**

(57) Abstract :
Method and Apparatus for non-destructive testing of composites using Planar Sensor The present invention related to the non-invasive detection of voids in Fiber Reinforced Plastics (FRP). The said invention is an ideal nondestructive evaluation method for the detection of subsurface defects that utilizes the capabilities of a magneto-inductive planar microstrip sensor and the same is examined in this invention. A combination of magneto inductive waveguide (MIW) and a patch radiator is used as the sensing element. The magneto inductive waveguide increases the sensitivity of the patch to the presence of voids in the FRP. The present invention relates to the development and use of a microwave probe for non-destructive sensing of dielectrics. The sensor is designed as a microstrip patch coupled with a planar magneto inductive waveguide. The sensor so designed is studied for frequency variations in its reflection characteristics to locate and quantify defects within dielectrics.

No. of Pages : 16 No. of Claims : 10

(12) PATENT APPLICATION PUBLICATION
(21) Application No.5311/CHE/2015 A
(19) INDIA
(22) Date of filing of Application :05/10/2015
(43) Publication Date : 23/10/2015

(54) Title of the invention : CONSTRUCTION OF BUILDINGS FROM 3D DRAWINGS

(51) International classification :E04B
(31) Priority Document No :NA
(32) Priority Date :NA
(33) Name of priority country :NA
(86) International Application No :NA
Filing Date :NA
(87) International Publication No : NA
(61) Patent of Addition to Application Number :NA
Filing Date :NA
(62) Divisional to Application Number :NA
Filing Date :NA

(71)**Name of Applicant :**
1)BALAJI.D
Address of Applicant :SITE NO. 43, MADHUSUDHANAN LAYOUT, OPPOSITE TO KMCH, CIVIL AERODROME POST, COIMBATORE - 641 014, Tamil Nadu India
(72)**Name of Inventor :**
1)BALAJI.D
2)PRIYADHARSHINI.M

(57) Abstract :
The buildings are generally constructed with human and machineries. The current technology shows a new path in the construction industry, thats with very minimum human inventions. The building drawing alone sufficient to build the building in the future it might be irrespective of number of floors. This technology is really the great change over in the world soon. The computer drawing turns out into building with the help of latest 3D printing and automation technology. This invention focuses on that. The major support to the human society while constructing the new buildings.

No. of Pages : 8 No. of Claims : 4

(12) PATENT APPLICATION PUBLICATION
(21) Application No.5310/CHE/2015 A
(19) INDIA
(22) Date of filing of Application :05/10/2015
(43) Publication Date : 23/10/2015

(54) Title of the invention : STOL AND VTOL FOR THE COMMERCIAL AIRCAFT

(51) International classification :B64C
(31) Priority Document No :NA
(32) Priority Date :NA
(33) Name of priority country :NA
(86) International Application No :NA
Filing Date :NA
(87) International Publication No : NA
(61) Patent of Addition to Application Number :NA
Filing Date :NA
(62) Divisional to Application Number :NA
Filing Date :NA

(71)**Name of Applicant :**
1)BALAJI.D
Address of Applicant :NEW NO 34, MUDICHUR ROAD, WEST TAMBARAM, PIN - 600 045, Tamil Nadu India
(72)**Name of Inventor :**
1)BALAJI.D

(57) Abstract :
The short or vertical take-off and landing of commercial aircraft is must require method to be adopted soon. The major changes are required in airport congestion, global warming, fossil fuel scarcity and passenger comfort. All these issues are resolved by the effective adoption of the STOL or VTOL method. The only requirement is that effective implementation of these methods into the aircraft. The methods are described in detail in the description.

No. of Pages : 9 No. of Claims : 4

(12) PATENT APPLICATION PUBLICATION
(21) Application No.5434/CHE/2015 A
(19) INDIA
(22) Date of filing of Application :10/10/2015
(43) Publication Date : 23/10/2015

(54) Title of the invention : SECURITY SYSTEM FOR A VEHICLE AND METHOD EMPLOYED THEREOF

(51) International classification :G08B
(31) Priority Document No :NA
(32) Priority Date :NA
(33) Name of priority country :NA
(86) International Application No :NA
Filing Date :NA
(87) International Publication No : NA
(61) Patent of Addition to Application Number :NA
Filing Date :NA
(62) Divisional to Application Number :NA
Filing Date :NA

(71)**Name of Applicant :**
1)RAJENDRA KUMAR YERRA
Address of Applicant :15-19, Asha Hospital Road, Gollapudi, Vijayawada, Krishna Dist, Andhra Pradesh-521225, India. Andhra Pradesh India
(72)**Name of Inventor :**
1)RAJENDRA KUMAR YERRA

(57) Abstract :
Exemplary embodiments of the present disclosure are directed towards a security system for a vehicle, comprising a hardware platform mounted on a vehicle, whereby a panic button unit connected to a processing device is configured on the hardware platform. At least four relays are secured to the processing device for operating the panic button unit. A GSM module is configured on the processing device, whereby a user device communicates with the GSM module through a network. An image capturing unit secured to the processing device for capturing images of the vehicle, whereby the images are sent to the user device through the network. a GPS module coupled to the processing device in order to provide location and other such related data associated with the capabilities of the GPS, whereby the user device gets the global positioning system location of the hardware platform through the network by the GPS module. The system further includes at least one buzzer connected to the processing device for emitting sounds when the panic button activates.

No. of Pages : 13 No. of Claims : 8

(12) PATENT APPLICATION PUBLICATION
(21) Application No.5315/CHE/2015 A
(19) INDIA
(22) Date of filing of Application :05/10/2015
(43) Publication Date : 23/10/2015

(54) Title of the invention : SYSTEM AND METHOD FOR PROVIDING COMPUTER NETWORK SECURITY

(51) International classification :G06F
(31) Priority Document No :NA
(32) Priority Date :NA
(33) Name of priority country :NA
(86) International Application No :NA
Filing Date :NA
(87) International Publication No : NA
(61) Patent of Addition to Application Number :NA
Filing Date :NA
(62) Divisional to Application Number :NA
Filing Date :NA

(71)**Name of Applicant :**
1)WIPRO LIMITED
Address of Applicant :Doddakannelli, Sarjapur Road, Bangalore 560035, Karnataka, India. Karnataka India
(72)**Name of Inventor :**
1)RADHA KRISHNA SINGURU

(57) Abstract :
This disclosure relates generally to computer network, and more particularly to a system and method for providing computer network security. In one embodiment, a method is provided for providing computer network security. The method comprises gathering threat information from one or more sources, deriving security intelligence based on the threat information, determining a security measure based on the security intelligence, and dynamically applying the security measure to a computer network using a set of virtual appliances and a set of virtual switches. Figure 3.

No. of Pages : 21 No. of Claims : 18

(12) PATENT APPLICATION PUBLICATION
(21) Application No.5368/CHE/2015 A
(19) INDIA
(22) Date of filing of Application :07/10/2015
(43) Publication Date : 23/10/2015

(54) Title of the invention : IMPROVEMENT IN METHOD OF COPS LOADING SYSTEM

(51) International classification :D01H
(31) Priority Document No :NA
(32) Priority Date :NA
(33) Name of priority country :NA
(86) International Application No :NA
Filing Date :NA
(87) International Publication No : NA
(61) Patent of Addition to Application Number :NA
Filing Date :NA
(62) Divisional to Application Number :NA
Filing Date :NA

(71)**Name of Applicant :**
1)R.MADHU
Address of Applicant :18-18/1, P.L.S. NAGAR PHASE - III, CHINNIAMPALAYAM, COIMBATORE - 641 062, Tamil Nadu India
2)T.BHARATHIRAJA
(72)**Name of Inventor :**
1)R.MADHU
2)T.BHARATHIRAJA

(57) Abstract :
Cops Filled on Detachable Storage bin, Collapsing Rubber Roll collapses the Cops and Cops fall down one by one on V Slots provided on the indexing wheel -1 . After placement of;first cop on the IT slot of indexing wheel- 1, electric mdtor-1 will rotates the indexing wheel-1 90 degree, automatically empty U slot will be positioned for the next cop, By rotating the indexing wheel-1, direction of cop changed from horizontal to vertical position because of the inbuilt design. When cop located vertically, bottom portion of cop is also positioned on circular Slots of indexing wheel-2 Indexing wheel-2 rotates for required angle to move cop, electric motor-2 rotating the indexing wheel-2, While rotating of indexing wheel -2 with cops indexing wheel -2 will rotates cop and keeping it ready to load on spindle of ring spinning machine, Horizontal pneumatic Cylinder mounted on bottom of circular Side guide will hold the cop from free falling, When cop need to load on spindle of ring spinning machine,, horizontal pneumatic Cylinder retracts its piston rod and allows a cop to fall down and load into spindle of ring spinning machine While loading of cop on spindle of ring spinning machine, Vertical Pneumatic cylinder will hits top of cop on high force to increase speed of free falling cop

No. of Pages : 11 No. of Claims : 3

(12) PATENT APPLICATION PUBLICATION
(21) Application No.5363/CHE/2015 A
(19) INDIA
(22) Date of filing of Application :07/10/2015
(43) Publication Date : 23/10/2015

(54) Title of the invention : INDIRECT BIOLEACHING PROCESS FOR LEACHING OF ARSENIC FROM REALGAR ORE BY THE LEPTOSPIRILLUM FERRIPHILUM ISOLATE

(51) International classification :C22B
(31) Priority Document No :NA
(32) Priority Date :NA
(33) Name of priority country :NA
(86) International Application No :NA
Filing Date :NA
(87) International Publication No : NA
(61) Patent of Addition to Application Number :NA
Filing Date :NA
(62) Divisional to Application Number :NA
Filing Date :NA

(71)**Name of Applicant :**
1)S.VENKATESA PRABHU
Address of Applicant :DEPARTMENT OF PETROLEUM ENGINEERING, J.C.T. COLLEGE OF ENGINEERING AND TECHNOLOGY, PICHANUR, COIMBATORE - 641 105, Tamil Nadu India
2)K.I.ABDUL KADHER
3)S.ABHIJITH
4)JEFFIN THOMAS
(72)**Name of Inventor :**
1)S.VENKATESA PRABHU
2)K.I.ABDUL KADHER
3)S.ABHIJITH
4)JEFFIN THOMAS

(57) Abstract :
Bioleaching is the dissolution of minerals due to direct or indirect mechanism of different microorganisms. Bioleaching of Arsenic from the Realgar ore was made by using the optimized energy source and operating parameters in this process. The present innovation of the process deals with indirect bioleaching of realgar ore collected from Lingshot mine province, Kashmir, India using Leptospirillum ferriphilum isolate. The iron-oxidizing bacteria, L. ferriphilum was isolated from Chitradurga acid mine drainage, Karnataka, India. This acclimatized inoculum was used as bacterial leaching agent in the bioleaching process. Bioleaching experiment was conducted in 250 ml Erlenmeyer flasks, each containing 5% (w/v) of realgar; 10% (v/v) of acclimatized inoculum, 90% (v/v) of bioleaching medium. The bioleaching media constituents were FeS047H20 - 7g/l; (NH4)2S04 -132 mg/l; MgCl26H20 - 53 mg/l; KH2P04 - 27mg/l; CaCl22H20 - 147 mg/l and trace elements: MnCl22H20 - 0.062 mg/l; ZnCl2 - 0.068 mg/l; CoCl26H20 - 0.064 mg/l; H3BO3 - 0.031 mg/l; Na2Mo04 - 0.01mg/l; CuCl22H20 - 0.67mg/l. The process operated at constant temperature of 40°C and agitation speed of 200 rpm. The bioleaching process with these chosen parameters has showed the better leaching rates and bioleaching efficiency of As from the realgar ore by indirect bioleaching.

No. of Pages : 13 No. of Claims : 8

(12) PATENT APPLICATION PUBLICATION
(21) Application No.5400/CHE/2015 A
(19) INDIA
(22) Date of filing of Application :09/10/2015
(43) Publication Date : 23/10/2015

(54) Title of the invention : METHOD OF PREPARATION OF ION EXCHANGE RESIN FROM GREEN AND BLACK TEA MATERIAL

(51) International classification :C07C
(31) Priority Document No :NA
(32) Priority Date :NA
(33) Name of priority country :NA
(86) International Application No :NA
Filing Date :NA
(87) International Publication No : NA
(61) Patent of Addition to Application Number :NA
Filing Date :NA
(62) Divisional to Application Number :NA
Filing Date :NA

(71)**Name of Applicant :**
1)R. VIMAL
Address of Applicant :PLOT 29/1, 5TH CROSS, BANKERS COLONY, KUMARAN NAGAR, VAYALUR ROAD, TRICHY - 620 017, Tamil Nadu India
2)R.RAGHUNATHAN
(72)**Name of Inventor :**
1)R. VIMAL
2)R.RAGHUNATHAN

(57) Abstract :
The present work will discuss about the method of preparation of ion exchange resin from green tea and black tea extracts at three different temperatures for the purpose of purification and softening of water. This work deals about the reaction of amino acids and polyphenols, separately with formaldehyde in the presence of a carboxylic acid, wherein both the reaction will occur simultaneously. The base formed due to the reaction of amino acids with formaldehyde, being an impurity has hindered the cross linking of polyphenols during the. reaction. The yield and ion exchange rate of all the resins obtained were analyzed, thereof.

No. of Pages : 8 No. of Claims : 9

(12) PATENT APPLICATION PUBLICATION
(21) Application No.4655/CHE/2014 A
(19) INDIA
(22) Date of filing of Application :24/09/2014
(43) Publication Date : 23/10/2015

(54) Title of the invention : OVERLOAD CONTROL MECHANISM IN TWO WHEELED PETROL VEHICLE

(51) International classification :B62K
(31) Priority Document No :NA
(32) Priority Date :NA
(33) Name of priority country :NA
(86) International Application No :NA
Filing Date :NA
(87) International Publication No : NA
(61) Patent of Addition to Application Number :NA
Filing Date :NA
(62) Divisional to Application Number :NA
Filing Date :NA

(71)**Name of Applicant :**
1)KTM. BHARATHEESWARAN
Address of Applicant :NO.34, PREETHAM STREET, DURAISAMY NAGAR, MADURAI - 625 016 Tamil Nadu India
(72)**Name of Inventor :**
1)KTM. BHARATHEESWARAN

(57) Abstract :
A tool is developed towards preventing road accidents by installing an overload control mechanism in any kind of two-wheeled petrol vehicle (motorbike/scooter) which senses the overload and transmits into electrical signals to the device, thereby making the engine automatically switch off Also, this principle of mechanism prevents crashes of vehicles due to over loading.

No. of Pages : 14 No. of Claims : 6

(12) PATENT APPLICATION PUBLICATION
(19) INDIA
(22) Date of filing of Application :10/10/2014
(21) Application No.1031/KOL/2014 A
(43) Publication Date : 23/10/2015

(54) Title of the invention : A CONSTRUCTION STRUCTURE AND METHOD OF MAKING THEREOF

(51) International classification :E04B1/343
(31) Priority Document No :NA
(32) Priority Date :NA
(33) Name of priority country :NA
(86) International Application No :PCT//
Filing Date :01/01/1900
(87) International Publication No : NA
(61) Patent of Addition to Application Number :NA
Filing Date :NA
(62) Divisional to Application Number :NA
Filing Date :NA

(71)**Name of Applicant :**
1)Worsak Kanok-Nukulchai
Address of Applicant :Asian Institute of TechnologyKlong Luong, Pathumthani Thailand 12120 Thailand
(72)**Name of Inventor :**
1)STHAPIT, Gyanendra Ratna
2)NAIK, Praful
3)JABADE, Siddharth
4)AMATYA, Sudiksha
5)ACHARYA, Kiran
6)JAENGJIT, Preecha
7)JAENGJIT, Chalard

(57) Abstract :
The present invention relates to a construction structure comprising a combination / arrangement of at least two units of elements (350 & 351) selected from compacted intermeshing blocks that are soil based, ash based or a combination, modularly reinforced load bearing unit for floor and/or slab, peggable contoured roofing element, reinforcement substance/s. The components of the structure are modular and could be built onsite. The process of making compacted intermeshing blocks is green with a substantially lower embodied energy obviating heating in kiln. The compacted intermeshing blocks comprise of regular compacted intermeshing block, half size regular compacted intermeshing bock, compacted intermeshing block with a longitudinal cavity, half size compacted intermeshing block with a longitudinal cavity. The configurations using compacted intermeshing blocks and intermittent reinforcement reduces use of mortar, enables use of locally available material such as soil as well as disposable waste material such as fly ash to build a construction structure.

No. of Pages : 51 No. of Claims : 20

Publication After 18 Months:

The following Patent Applications have been published under Section 11A (3) of The Patents (Amendment) Act, 2005. Any Person may file representation by way of opposition to the Controller of Patents at the appropriate office against the grant of the patent in the prescribed manner under section 25(1) of the Patents (Amendment) Act, 2005 read with the rule 55 of The Patents (Amendment) Rules, 2006:

(12) PATENT APPLICATION PUBLICATION

(21) Application No.1062/DEL/2014 A

(19) INDIA

(22) Date of filing of Application :18/04/2014

(43) Publication Date : 23/10/2015

(54) Title of the invention : A FLUID COLLECTION DEVICE

(51) International classification	:A61K39/04
(31) Priority Document No	:NA
(32) Priority Date	:NA
(33) Name of priority country	:NA
(86) International Application No	:NA
Filing Date	:NA
(87) International Publication No	: NA
(61) Patent of Addition to Application Number	:NA
Filing Date	:NA
(62) Divisional to Application Number	:NA
Filing Date	:NA

(71)**Name of Applicant :**

1)BALWANT RAI

Address of Applicant :Vill-Bhangu, P.O.-Sahuwala 1, District-Sirsa, (Haryana) ,125077 ,INDIA Delhi India

2)JASDEEP KAUR

(72)**Name of Inventor :**

1)BALWANT RAI

2)JASDEEP KAUR

(57) Abstract :

Abstract: The present invention relates to a fluid collection device designed for safely collecting the samples from different types of sources, such as, oral cavity for collection of oral fluid samples, vagina, urine, seminal for collection of samples, wound for collecting wound samples, and environmental surface for collecting environmental samples which comprises home based collection and easy fluid collection. EXAMPLE 3

No. of Pages : 22 No. of Claims : 14

(12) PATENT APPLICATION PUBLICATION
(21) Application No.3204/DELNP/2012 A
(19) INDIA
(22) Date of filing of Application :13/04/2012
(43) Publication Date : 23/10/2015

(54) Title of the invention : STABLE THICKENER FORMULATIONS

(51) International classification :A61K 9/00
(31) Priority Document No :61/254,858
(32) Priority Date :26/10/2009
(33) Name of priority country :U.S.A.
(86) International Application No :PCT/US2010/053891
Filing Date :25/10/2010
(87) International Publication No :WO 2011/056487
(61) Patent of Addition to Application Number :NA
Filing Date :NA
(62) Divisional to Application Number :NA
Filing Date :NA

(71)**Name of Applicant :**
1)NESTEC S.A.
Address of Applicant :AVENUE NESTLE 55, CH-1800 VEVEY, SWITZERLAND Switzerland
(72)**Name of Inventor :**
1)OLSON, ERIN

(57) Abstract :
Stable thickener formulations and nutritional compositions having the stable thickener formulations are provided. In a general embodiment the present disclosure provides a stable thickener formulation comprising from about 0.015 % to about 0.05 % by weight of carrageenan and from about 1.2 % to about 4.0 % by weight of starch. The stable thickener formulation can be used in nutritional compositions used to treat a variety of physiological conditions.

No. of Pages : 43 No. of Claims : 27

(12) PATENT APPLICATION PUBLICATION
(19) INDIA
(22) Date of filing of Application :13/04/2012
(21) Application No.3205/DELNP/2012 A
(43) Publication Date : 23/10/2015

(54) Title of the invention : INCREASED EFFICIENCY STRAINER SYSTEM

(51) International classification :B01D 24/00
(31) Priority Document No :12/578,413
(32) Priority Date :13/10/2009
(33) Name of priority country :U.S.A.
(86) International Application No :PCT/US2010/051005
Filing Date :30/09/2010
(87) International Publication No :WO 2011/046753
(61) Patent of Addition to Application Number :NA
Filing Date :NA
(62) Divisional to Application Number :NA
Filing Date :NA

(71)**Name of Applicant :**
1)CONTROL COMPONENTS, INC.
Address of Applicant :22591 AVENIDA EMPRESA RANCHO SANTA MARGARITA CALIFORNIA 92688 UNITED STATES OF AMERICA U.S.A.
(72)**Name of Inventor :**
1)KIELBOWICZ, STANISLAW
2)PRATHER, CARL W.

(57) Abstract :
In accordance with the present invention, there is provided a strainer system comprising a plurality of strainer modules, each of which comprises multiple cassettes or cartridges assembled together in a prescribed arrangement. In the strainer system constructed in accordance with the present invention, the clean sides of the strainer modules are fluidly connected to each other by a plenum duct which also has a suction pump fluidly coupled thereto. Integrated into the plenum duct is a pressure released membrane (PRM) which is positioned so as to effectively isolate one of the strainer modules from the remaining active strainer modules included in the strainer system. The pressure released membrane is uniquely configured so as to facilitate the activation of the isolated strainer module when pressure across the plenum duct increases beyond a prescribed threshold.

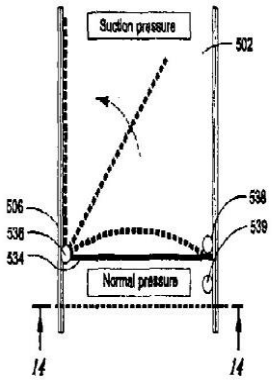

Fig. 13

No. of Pages : 42 No. of Claims : 41

(12) PATENT APPLICATION PUBLICATION
(21) Application No.3206/DELNP/2012 A
(19) INDIA
(22) Date of filing of Application :13/04/2012
(43) Publication Date : 23/10/2015

(54) Title of the invention : METHOD FOR MEASURING SHEET MATERIAL FLATNESS AND METHOD FOR PRODUCING STEEL SHEET USING SAID MEASURING METHOD

(51) International classification :G01B 11/30
(31) Priority Document No :2009-240574
(32) Priority Date :19/10/2009
(33) Name of priority country :Japan
(86) International Application No :PCT/JP2010/063068
Filing Date :03/08/2010
(87) International Publication No :WO 2011/048860
(61) Patent of Addition to Application Number :NA
Filing Date :NA
(62) Divisional to Application Number :NA
Filing Date :NA

(71)**Name of Applicant :**
1)SUMITOMO ELECTRIC INDUSTRIES, LTD.
Address of Applicant :5-33, KITAHAMA 4-CHOME, CHUO-KU OSAKA-SHI, OSAKA 541-0041 JAPAN Japan
(72)**Name of Inventor :**
1)ISEI, YOSHITO
2)KATO, TOMOYA
3)OSUGI, MASAHIRO

(57) Abstract :
An objective of the present invention is to provide a method for measuring the flatness of a sheet material, in which even in the case where an image pickup device is arranged at a position at which the specularly reflected light of a light and dark pattern projected onto the surface of a sheet material having a strong specular reflection property can be received, the surface shape and the flatness of the sheet material can be measured with high accuracy. The method of the present invention uses a staggered pattern as the light and dark pattern projected onto the surface of the sheet material, the staggered pattern being composed of light portions arranged in a staggered form at a predetermined preset pitch in a longitudinal direction and a transverse direction. The method sets a shape measurement line extending along the longitudinal direction of the staggered pattern in the acquired pattern image by the image pickup device. The method averages picture element concentrations on a straight line which passes through a picture element on the shape measurement line and extends in the transverse direction of the staggered pattern, and has a length two times or more the transverse preset pitch between the light portions to calculate an average picture element concentration. The method calculates a surface shape of the sheet material based on the average picture element concentration distribution along the shape measurement line, and calculates the flatness of the sheet material based on the calculated surface shape.

FIG. 5

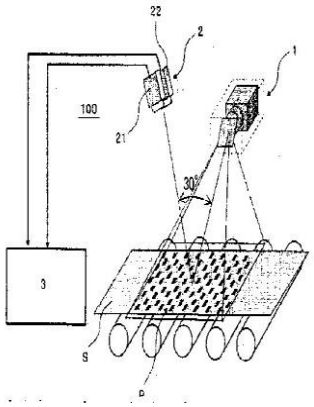

No. of Pages : 94 No. of Claims : 7

(12) PATENT APPLICATION PUBLICATION
(19) INDIA
(22) Date of filing of Application :13/04/2012
(21) Application No.3210/DELNP/2012 A
(43) Publication Date : 23/10/2015

(54) Title of the invention : WIPER BLADE OF FLAT BEAM CONSTRUCTION

(51) International classification :B60S 1/38
(31) Priority Document No :10 2009 046 776.9
(32) Priority Date :17/11/2009
(33) Name of priority country :Germany
(86) International Application No :PCT/EP2010/065583
Filing Date :18/10/2010
(87) International Publication No :WO 2011/061023
(61) Patent of Addition to Application Number :NA
Filing Date :NA
(62) Divisional to Application Number :NA
Filing Date :NA

(71)**Name of Applicant :**
1)ROBERT BOSCH GMBH
Address of Applicant :POSTFACH 30 02 20, 70442 STUTTGART, GERMANY Germany
(72)**Name of Inventor :**
1)BENNER, ANDREAS
2)WESTERMANN, KLAUS-JUERGEN

(57) Abstract :
A wiper blade (10) of flat beam construction comprising a pre-bent spring rail (16) to which a connection element (20) is fastened. The connection element (20) has two side walls (22) with open guide profiles (28) for the spring rail (16), wherein the side walls (22) are connected to one another by means of a floor (24), and the connecting element (20) is fixed relative to the spring rail (16) in a longitudinal direction by means of a fixing element (40), wherein the fixing element (40) engages into recesses (34) on outer longitudinal sides of the spring rail (16). In an embodiment, the fixing element (40) has a U-shaped cross-sectional profile with two side walls (42), which are connected to one another by means of a base (44) and which are sunk into recesses (30) on the inner sides of the side walls (22) of the connection element (20).

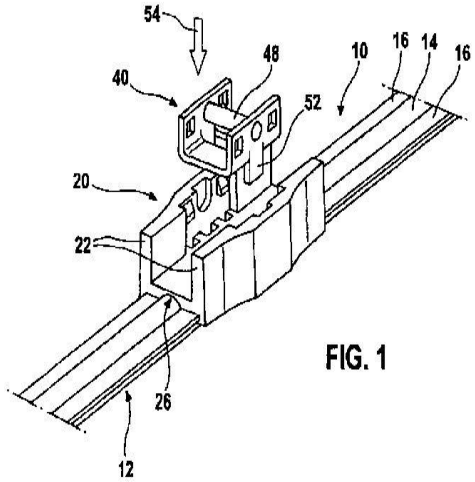

FIG. 1

No. of Pages : 12 No. of Claims : 10

(12) PATENT APPLICATION PUBLICATION
(19) INDIA
(22) Date of filing of Application :13/04/2012

(21) Application No.3211/DELNP/2012 A
(43) Publication Date : 23/10/2015

(54) Title of the invention : IMPLANTABLE OPHTHALMIC MEMS SENSOR DEVICES AND METHODS FOR EYE SURGERY

(51) International classification :A61B 3/16
(31) Priority Document No :61/243,843
(32) Priority Date :18/09/2009
(33) Name of priority country :U.S.A.
(86) International Application No :PCT/US2010/049527
Filing Date :20/09/2010
(87) International Publication No :WO 2011/035262
(61) Patent of Addition to Application Number :NA
Filing Date :NA
(62) Divisional to Application Number :NA
Filing Date :NA

(71)**Name of Applicant :**
1)ORTHOMEMS, INC.
Address of Applicant :325 SHARON PARK DRIVE, SUITE 203, MENLO PARK, CALIFORNIA 94025, UNITED STATES OF AMERICA U.S.A.
(72)**Name of Inventor :**
1)WONG, VERNON G.
2)LEE, DOUGLAS A. LEE

(57) Abstract :
Methods and apparatus for measurement of IOP following glaucoma surgery comprise an implant device having a pressure sensitive capacitor and coil sized for placement along the tissue drainage path, to monitor the success of the surgery and measure IOP directly. The implantable sensor device may comprise a MEMS based capacitive pressure sensor and coil. A complaint material is disposed over the pressure sensitive capacitor and coil to conform with tissue to further decrease invasiveness and such that the implant can measure pressure from at least a first side and a second side when positioned along the drainage path. The implant can work well with trabeculectomies and trabeculotomies, and can be positioned on the sclera at a location corresponding to the bleb, such that the effectiveness of the surgery and medication can be determined postoperatively to detect pressure changes and elevations

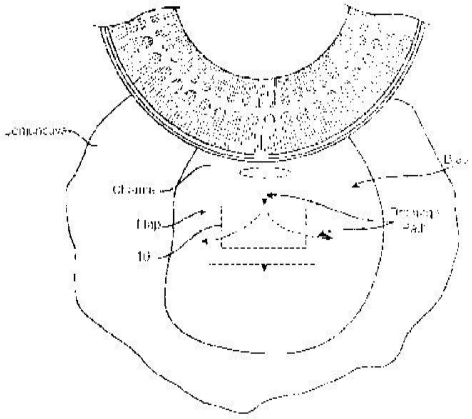

FIG. 2B2

No. of Pages : 65 No. of Claims : 47

(12) PATENT APPLICATION PUBLICATION
(19) INDIA
(22) Date of filing of Application :13/04/2012

(21) Application No.3212/DELNP/2012 A
(43) Publication Date : 23/10/2015

(54) Title of the invention : MIGRATION-BASED ILLUMINATION DETERMINATION FOR AVA RISK ASSESSMENT

(51) International classification :G01V 1/28
(31) Priority Document No :61/248,222
(32) Priority Date :02/10/2009
(33) Name of priority country :U.S.A.
(86) International Application No :PCT/US2010/051321
Filing Date :04/10/2010
(87) International Publication No :WO 2011/041782
(61) Patent of Addition to Application Number :NA
Filing Date :NA
(62) Divisional to Application Number :NA
Filing Date :NA

(71)**Name of Applicant :**
1)BP CORPORATION NORTH AMERICA INC.
Address of Applicant :4101 WINFIELD ROAD, WARRENVILLE, ILLINOIS 60555, UNITED STATES OF AMERICA U.S.A.
(72)**Name of Inventor :**
1)ALBERTIN, UWE
2)ASKIM, OLE, JORAN
3)GHERASIM, MARIANA

(57) Abstract :
According to a preferred aspect of the instant invention, there is provided herein a system and method for extending zero-offset or stacked wave-equation illumination analysis into the angle-gather domain, where it becomes an appropriate tool for assessing the effects of complex overburden on AVA response. A preferred method for doing this involves first creating an angle gather that has a perfect AVA response (i.e. a constant amplitude as a function of angle). This gather is then preferably used as a reflectivity map that is fed into a demigration process which creates modeled data that by construction carries with it a completely flat reflectivity signature. Remigration of such a data set then results in a gather on which any amplitude variation is more likely to be a measure of illumination effects alone. The resulting AVA signature on the gather can then be used to assess the validity of the AVA response on modeled or actual data, resulting in a useful AVA risk analysis.

Figure 1

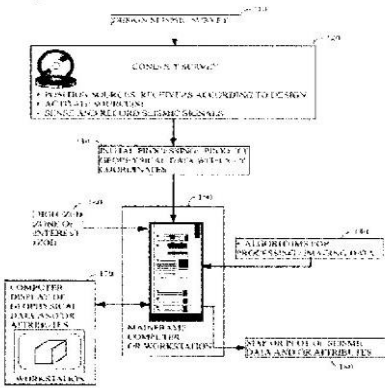

No. of Pages : 49 No. of Claims : 7

(12) PATENT APPLICATION PUBLICATION
(19) INDIA
(22) Date of filing of Application :13/04/2012
(21) Application No.3213/DELNP/2012 A
(43) Publication Date : 23/10/2015

(54) Title of the invention : TRICYCLIC COMPOUNDS AND PHARMACEUTICAL USES THEREOF

(51) International classification :A01N 43/42
(31) Priority Document No :61/243,107
(32) Priority Date :16/09/2009
(33) Name of priority country :U.S.A.
(86) International Application No :PCT/US2010/049116
Filing Date :16/09/2010
(87) International Publication No :WO 2011/035022
(61) Patent of Addition to Application Number :NA
Filing Date :NA
(62) Divisional to Application Number :NA
Filing Date :NA

(71)**Name of Applicant :**
1)CYLENE PHARMACEUTICALS, INC.
Address of Applicant :5820 NANCY RIDGE DRIVE, SUITE 200, SAN DIEGO, CALIFORNIA 92121, UNITED STATES OF AMERICA U.S.A.
(72)**Name of Inventor :**
1)HADDACH, MUSTAPHA
2)PIERRE, FABIREE

(57) Abstract :
The invention provides compounds that inhibit CK2 and/or Pim kinases and compositions containing such compounds. These tricyclic compounds and compositions containing them are useful for treating proliferative disorders such as cancer, as well as other kinase-associated conditions including inflammation, pain, pathogenic infections, and certain immunological disorders .

No. of Pages : 89 No. of Claims : 47

(12) PATENT APPLICATION PUBLICATION
(19) INDIA
(22) Date of filing of Application :17/04/2014
(21) Application No.1059/DEL/2014 A
(43) Publication Date : 23/10/2015

(54) Title of the invention : A BATH TUB

(51) International classification :A47K 3/00
(31) Priority Document No :NA
(32) Priority Date :NA
(33) Name of priority country :NA
(86) International Application No :NA
Filing Date :NA
(87) International Publication No : NA
(61) Patent of Addition to Application Number :NA
Filing Date :NA
(62) Divisional to Application Number :NA
Filing Date :NA

(71)**Name of Applicant :**
1)NISHANT SINGHAL
Address of Applicant :W-43 GREATER KAILASH-2, NEW DELHI-110048. Delhi India
(72)**Name of Inventor :**
1)NISHANT SINGHAL

(57) Abstract :
This invention relates to a bath tub comprising an elongated tub having a raised level constituting a seat and deeper level in conjunction with adjacent walls acting as a water reservoir during the bath. The bath tub of invention is convenient and safe to use particularly by infants. It saves water and prevents risk of injury to infant. Further, it is portable and allows bather to give bath comfortably without getting wet.

No. of Pages : 13 No. of Claims : 10

(12) PATENT APPLICATION PUBLICATION
(19) INDIA
(22) Date of filing of Application :22/03/2012
(21) Application No.2518/DELNP/2012 A
(43) Publication Date : 23/10/2015

(54) Title of the invention : APPARATUS FOR TEMPERING FLAT GLASS

(51) International classification :C03B 27/012
(31) Priority Document No :10-2009-0093114
(32) Priority Date :30/09/2009
(33) Name of priority country :Republic of Korea
(86) International Application No :PCT/KR2010/004414
Filing Date :07/07/2010
(87) International Publication No :WO 2011/040698
(61) Patent of Addition to Application Number :NA
Filing Date :NA
(62) Divisional to Application Number :NA
Filing Date :NA

(71)**Name of Applicant :**
1)KIM, GWAN SHIG
Address of Applicant :255-5, HWAJIN-RI, SONGNA-MYEON, POHANG SI BUK-GU, GYEONGSANGBUK-DO 791-863 REPUBLIC OF KOREA Republic of Korea
2)NOH, EUN JA
3)SIN, JAE EUN
4)YANG, TAE SU
(72)**Name of Inventor :**
1)KIM, GWAN SING
2)NOH, EUN JA
3)SIN, JAE EUN
4)YANG, TAE SU

(57) Abstract :
The present invention relates to an apparatus for tempering flat glass, and more particularly to an apparatus for tempering flat glass, comprising: a preheating unit for preheating the flat glass placed in a transfer frame; a heating unit for heating the preheated flat glass; an annealing unit for annealing the heated flat glass; and a washing unit for washing the annealed flat glass, wherein the heating unit and the washing unit are arranged in parallel to each other, and wherein: both the heating unit and the washing unit re formed into a box shape with an inlet and an outlet; the preheating unit and the annealing unit are arranged so as to be movable along a guide, wherein both the preheating unit and the annealing unit are formed into a box shape with an inlet and an outlet, and a rail and the guide are arranged in a horizontal direction below the preheating unit and the annealing unit; and an open/shut door is arranged so as to be movable along the rail to selectively open/shut each inlet or outlet of the heating unit, of the preheating unit, and of the annealing unit; and a feed space is formed outside the heating unit and a discharge space is formed outside the washing unit, thereby improving the utilization of space, reducing real estate costs and defects, and improving productivity.

No. of Pages : 23 No. of Claims : 3

(12) PATENT APPLICATION PUBLICATION
(21) Application No.3262/DELNP/2012 A
(19) INDIA
(22) Date of filing of Application :16/04/2012
(43) Publication Date : 23/10/2015

(54) Title of the invention : FACILITATING E-COMMERCE PAYMENTS USING NON-ACCEPTED CUSTOMER PAYMENT METHODS

(51) International classification :G06Q 20/00
(31) Priority Document No :2,678,831
(32) Priority Date :15/09/2009
(33) Name of priority country :Canada
(86) International Application No :PCT/CA2010/001451
Filing Date :15/09/2010
(87) International Publication No :WO 2011/032280
(61) Patent of Addition to Application Number :NA
Filing Date :NA
(62) Divisional to Application Number :NA
Filing Date :NA

(71)**Name of Applicant :**
1)NETSECURE INNOVATIONS INC
Address of Applicant :230-1911 PARK STREET, REGINA, SASKATCHEWAN S4N 2G5 (CA) Canada
(72)**Name of Inventor :**
1)MCCANN, DANIEL

(57) Abstract :
A method of providing e-commerce payment functionality between a customer and a vendor wishing to provide or accept alternate methods of payment. The vendor website initiates a transaction payment request identifying the selected customer payment method, the transaction amount, and the desired vendor payment method to a payment facilitation bureau which processes payment for the transaction amount to the selected customer payment method and issues transaction payment credentials to the vendor in a transaction payment response. The vendor e-commerce platform can then process payment for the transaction to the selected vendor payment method using the issued payment credentials. Various vendor payment methods and customer selected payment methods could be used, and the method allows for the bridging of incompatible pairings of payment methods. Client and server level software for use in this payment method is also disclosed.

No. of Pages : 76 No. of Claims : 41

(12) PATENT APPLICATION PUBLICATION
(19) INDIA
(22) Date of filing of Application :16/04/2012
(21) Application No.3263/DELNP/2012 A
(43) Publication Date : 23/10/2015

(54) Title of the invention : AN INDUCTIVELY COUPLED POWER AND DATA TRANSMISSION SYSTEM

(51) International classification :H02J 17/00
(31) Priority Document No :61/272,621
(32) Priority Date :13/10/2009
(33) Name of priority country :U.S.A.
(86) International Application No :PCT/CA2010/001638
Filing Date :13/10/2010
(87) International Publication No :WO 2011/044695
(61) Patent of Addition to Application Number :NA
Filing Date :NA
(62) Divisional to Application Number :NA
Filing Date :NA

(71)**Name of Applicant :**
1)CYNETIC DESIGNS LTD.
Address of Applicant :889 WELLINGTON COURT KELOWNA BRITISH COLUMBIA VIY 8J2 CANADA (CA) Canada
(72)**Name of Inventor :**
1)SOAR, ROGER, J.

(57) Abstract :
An inductively coupled power and data transmission system include a main power source apparel having an electrical conductor in electrical communication with the main power source, the apparel having a first inductively couplable power and data transmission sub¬system to regulate power to the primary coil or coils and transmission of power and data by the primary coil or coils and reception of data by the primary coil or coils, and an independent device having a second inductively couplable power and data transmission sub¬system so as to regulate reception of power and data by the secondary coil or coils and transmission of data from a secondary processor by the secondary coil or coils. The first and second primary coils transfer said power and data during inductive coupling, at electromagnetic radiation frequencies, between the first primary coil or coils and the secondary coil or coils.

No. of Pages : 52 No. of Claims : 24

(12) PATENT APPLICATION PUBLICATION
(21) Application No.1035/DEL/2014 A
(19) INDIA
(22) Date of filing of Application :15/04/2014
(43) Publication Date : 23/10/2015

(54) Title of the invention : SPOKELESS BICYCLE SYSTEM WITH BEARING HOLDING MECHANISM AND ITS APPLICATION THEREOF

(51) International classification :B60B19/00,
(31) Priority Document No :NA
(32) Priority Date :NA
(33) Name of priority country :NA
(86) International Application No :NA
Filing Date :NA
(87) International Publication No : NA
(61) Patent of Addition to Application Number :NA
Filing Date :NA
(62) Divisional to Application Number :NA
Filing Date :NA

(71)**Name of Applicant :**
1)CET-IILM-AHL
Address of Applicant :18, KNOWLEDGE PARK-II GAUTAM BUDH NAGAR, GREATER NOIDA - 201306 Uttar Pradesh India
(72)**Name of Inventor :**
1)RAI, RAHUL KUMAR
2)YADAV, SANDEEP KUMAR
3)ALI, SHAHAZAD
4)MISHRA, SHIV CHANDRA

(57) Abstract :
A spokeless bicycle system that ftmctions on the bearing holding mechanism whereby the front and rear wheels of the bicycle are held by means of a plurality of bearings which are lined in the support structures of the wheels, thereby holding the weight of the front and rear wheels, so as to enable a smooth rotation of the wheels upon power transmission from the drive train of the bicycle. The bicycle system, that has no spokes, comprises of an assembly frame, a front support structure and a rear support structure, a rear wheel comprising of a rear tire and a rear rim, a front wheel comprising of a front tire and a front rim and a drive train mechanically connected to the rear wheel.

No. of Pages : 24 No. of Claims : 11

(12) PATENT APPLICATION PUBLICATION
(19) INDIA
(22) Date of filing of Application :16/04/2012

(21) Application No.3272/DELNP/2012 A
(43) Publication Date : 23/10/2015

(54) Title of the invention : HIGH POWER EFFICIENCY POLYCRYSTALLINE CDTE THIN FILM SEMICONDUCTOR PHOTOVOLTAIC CELL STRUCTURES FOR USE IN SOLAR ELECTRICITY GENERATION

(51) International classification :H01L 31/06
(31) Priority Document No :61/285,531
(32) Priority Date :10/12/2009
(33) Name of priority country :U.S.A.
(86) International Application No :PCT/US2010/059969
Filing Date :10/12/2010
(87) International Publication No :WO 2011/072269
(61) Patent of Addition to Application Number :NA
Filing Date :NA
(62) Divisional to Application Number :NA
Filing Date :NA

(71)**Name of Applicant :**
1)URIEL SOLAR INC.
Address of Applicant :2524 TOWNSGATE ROAD, SUITE F, WESTLAKE VILLAGE, CA 91361, UNITED STATES OF AMERICA U.S.A.
(72)**Name of Inventor :**
1)GARNETT, JAMES, DAVID
2)DINGUS, PETER
3)WANG, SHUMIN

(57) Abstract :
Solar cell structures formed using molecular beam epitaxy (MBE) that can achieve improved power efficiencies in relation to prior art thin film solar cell structures are provided. A reverse p-n junction solar cell device and methods for forming the reverse p-n junction solar cell device using MBE are described. A variety of n-p junction and reverse p-n junction solar cell devices and related methods of manufacturing are provided. N-intrinsic-p junction and reverse p-intrinsic-n junction solar cell devices are also described.

Figure 1 "Reversed" p-n junction solar cell

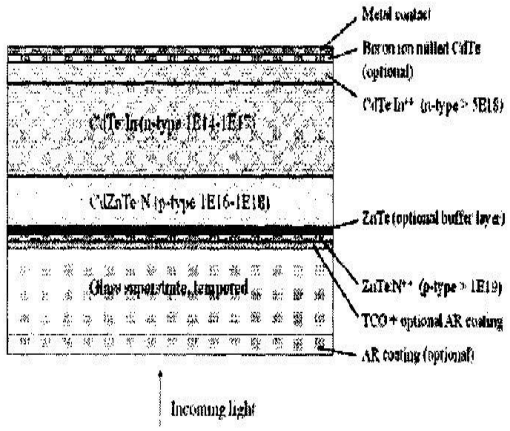

No. of Pages : 34 No. of Claims : 22

(12) PATENT APPLICATION PUBLICATION
(21) Application No.3273/DELNP/2012 A
(19) INDIA
(22) Date of filing of Application :16/04/2012
(43) Publication Date : 23/10/2015

(54) Title of the invention : FILTRATION APPARATUS AND FILTRATION METHOD

(51) International classification :B01D 24/46
(31) Priority Document No :2009-241518
(32) Priority Date :20/10/2009
(33) Name of priority country :Japan
(86) International Application No :PCT/JP2010/067716
Filing Date :08/10/2010
(87) International Publication No :WO 2011/048960
(61) Patent of Addition to Application Number :NA
Filing Date :NA
(62) Divisional to Application Number :NA
Filing Date :NA

(71)**Name of Applicant :**
1)KOBELCO ECO-SOLUTIONS CO., LTD.
Address of Applicant :4-78, WAKINOHAMA-CHO 1-CHOME, CHUO-KU, KOBE-SHI, HYOGO 651-0072, JAPAN, Japan
(72)**Name of Inventor :**
1)MURAKAMI, YOSHIAKI
2)ISHIMARU, YUTAKA
3)YOKOYAMA, HIDEKI

(57) Abstract :
An object is to provide a filtration apparatus which has a simplified pipe arrangement mechanism and has excellent uniform cleanability of a filter layer unit by backwashing. Provided is a filtration apparatus including: a filter layer unit that filters raw water, a plurality of water collection pipes that collect permeate permeating through the filter layer unit! and a pressure conduit that pressure-feeds water into the plurality of water collection pipes, the filter layer unit being backwashed by water transferred into the water collection pipes from the pressure conduit, wherein a communicating section for communication between the respective water collection pipes is provided so as to transfer water, which has been transferred into the water collection pipes from the pressure conduit, between the respective water collection pipes by a difference in pressure applied to the respective water collection pipes.

No. of Pages : 35 No. of Claims : 5

(12) PATENT APPLICATION PUBLICATION
(19) INDIA
(22) Date of filing of Application :16/04/2012
(21) Application No.3274/DELNP/2012 A
(43) Publication Date : 23/10/2015

(54) Title of the invention : METHOD AND APPARTUS FOR TRANSMITTING PHYSICAL SINGALS

(51) International classification :H04W 16/00
(31) Priority Document No :NA
(32) Priority Date :NA
(33) Name of priority country :NA
(86) International Application No :PCT/CN2009/074493
Filing Date :16/10/2009
(87) International Publication No :WO 2011/044734
(61) Patent of Addition to Application Number :NA
Filing Date :NA
(62) Divisional to Application Number :NA
Filing Date :NA

(71)**Name of Applicant :**
1)NOKIA SIEMENS NETWORKS OY
Address of Applicant :KARAPORTTI 3, F1 - 02610 ESPOO, FINLAND, France
(72)**Name of Inventor :**
1)RAAF, BERNHARD
2)WANG, HAI MING
3)ZENG, ERLIN
4)CHARBIT, GILLES
5)HAN, JING

(57) Abstract :
Transmitting physical signals precoded at the physical layer, and transmitting via a physical channel precoded at the physical layer decoding information for use in physical layer decoding of said physical signals; wherein said decoding information is incorporated into one or more data units at a layer higher than the physical layer. Transmitting in a single sub-frame one or more physical reference signals for use in physical layer decoding of a physical channel in a plurality of sub-frames.

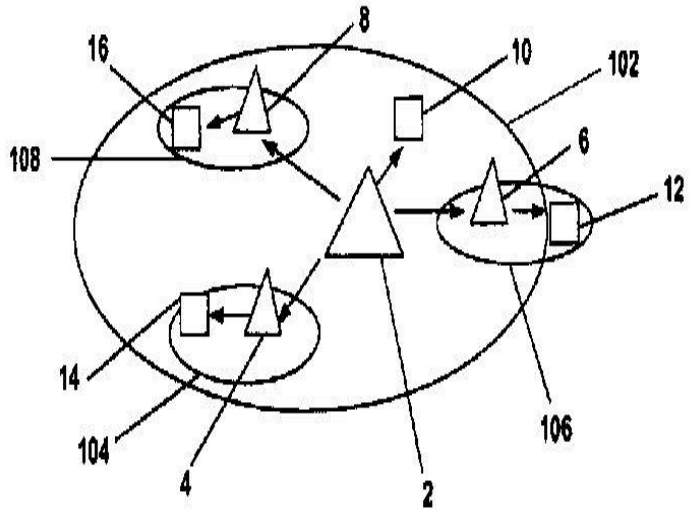

Figure. 1

No. of Pages : 27 No. of Claims : 28

(12) PATENT APPLICATION PUBLICATION
(19) INDIA
(22) Date of filing of Application :16/04/2012
(21) Application No.3275/DELNP/2012 A
(43) Publication Date : 23/10/2015

(54) Title of the invention : DATA CENTRE NETWORK DISTRIBUTON SYSTEM

(51) International classification :H01R 13/60
(31) Priority Document No :12/569,609
(32) Priority Date :29/09/2009
(33) Name of priority country :U.S.A.
(86) International Application No :PCT/US2010/050543
Filing Date :28/09/2010
(87) International Publication No :WO 2011/041310
(61) Patent of Addition to Application Number :NA
Filing Date :NA
(62) Divisional to Application Number :NA
Filing Date :NA

(71)**Name of Applicant :**
1)ZONIT STRUCTURED SOLUTIONS, LLC.
Address of Applicant :1790 30TH STREET, SUITE 140, BOULDER, COLORADO 80301, UNITED STATES OF AMERICA U.S.A.
(72)**Name of Inventor :**
1)CHAPEL, STEVE
2)PACHOUD, WILLIAM

(57) Abstract :
A method and apparatus (utility) for facilitating connection of rack-mounted data devices (50) to a data network is provided. The utility includes a distribution strip (42) and a number of network ports (44), disposed on the distribution strip (42), for use in connecting the rack-mounted data devices (50) to the network. The distribution strip (42) has a longitudinal axis, and is disposed on a rack (40) such that a length of the distribution strip (42), defined relative to the longitudinal axis, extends primarily or exclusively along a vertical axis of the rack (40). The distribution strip may further include a data network switch device. A utility is also provided that provides improved redundancy with regard to connections of rack-mounted data devices by including a distribution strip (42) that includes first and second ports (46) for connecting the distribution strip (42) to a network device (56).

No. of Pages : 41 No. of Claims : 25

(12) PATENT APPLICATION PUBLICATION
(21) Application No.1/DEL/2015 A
(19) INDIA
(22) Date of filing of Application :01/01/2015
(43) Publication Date : 23/10/2015

(54) Title of the invention : ROTARY PLOUGHS FOR GASIFIERS

(51) International classification	:C10J3/42
(31) Priority Document No	:ZA 2014/02831
(32) Priority Date	:16/04/2014
(33) Name of priority country	:South Africa
(86) International Application No	:NA
Filing Date	:NA
(87) International Publication No	: NA
(61) Patent of Addition to Application Number	:NA
Filing Date	:NA
(62) Divisional to Application Number	:NA
Filing Date	:NA

(71)**Name of Applicant :**
1)SASOL TECHNOLOGY (PROPRIETARY) LIMITED
Address of Applicant :1 Sturdee Avenue, Rosebank, 2196 Johannesburg, SOUTH AFRICA South Africa
(72)**Name of Inventor :**
1)STADLER, Jacobus Andreas
2)KOEKEMOER, Andrei Frederik
3)BEUKMAN, Marnus Tertius
4)HADEBE, Nkosinathi
5)FRANCIS, Daniel
6)DEAS, Gavin Shawn
7)DU TOIT, Johannes Marthinus

(57) Abstract :
A solids handling equipment rotary plough (200) includes a metal body having a bottom (202) and a top (204), the metal body defining a pair of opposed spaced non-parallel elongate faces (302, 402) extending between the bottom (202) and the top (204) and from a first end (304, 404) to a second end (306, 406) of each opposed elongate face (302, 402), the first end (304, 404) and the second end (306, 406) being spaced further from each other than the top (204) and the bottom (202) are spaced from each other providing each opposed elongate face (302, 402) with a length greater than a height. The opposed elongate faces (302, 402) are on opposite sides and facing away from a first imaginary vertical plane (206), each of said opposed elongate faces (302, 402) having at least two elongate major surfaces (308, 408, 310, 410) which are not co-planar, an upper, elongate, non-vertical, major surface (308, 408) being angled towards the first imaginary vertical plane (206) to slope upwardly towards said first imaginary vertical plane at an angle of at least 1° to the vertical and a lower, elongate, vertical, major surface (310, 410) being angled in a horizontal plane at an angle of at least 2° relative to the lower, elongate, vertical, major surface (410, 310) of the other of the opposed elongate faces (402, 302) so that the first ends (304, 404) of the opposed elongate faces (302, 402) are closer to each other than the second ends (306, 406) of the opposed elongate faces (302, 402) are to each other rendering the opposed elongate faces (302, 402) diverging in a direction from the first ends (304, 404) towards the second ends (306, 406). The first end (304, 404) of each elongate face (302, 402) is on a common side of a second imaginary vertical plane (208) which is perpendicular to the first imaginary vertical plane (206) and which is thus located between the first end (304, 404) and the second end (306, 406) of each elongate face (302, 402). The opposed spaced non-parallel elongate faces (302, 402) are joined by a connector (210) defining mounting means (212, 214, 216) to mount the rotary plough (200) to a rotatable grate component, the mounting means (212, 214, 216) being located between the opposed non-parallel elongate faces (302, 402).

No. of Pages : 64 No. of Claims : 17

(12) PATENT APPLICATION PUBLICATION
(19) INDIA
(22) Date of filing of Application :17/04/2012
(21) Application No.3294/DELNP/2012 A
(43) Publication Date : 23/10/2015

(54) Title of the invention : AN IN VITRO METHOD FOR IDENTIFYING A FLAVIVIRUS CROSS-REACTIVE EPITOPE

(51) International classification :C12N 15/10
(31) Priority Document No :60/591,898
(32) Priority Date :27/07/2004
(33) Name of priority country :U.S.A.
(86) International Application No :PCT/US05/026672
Filing Date :27/07/2005
(87) International Publication No :WO 2006/025990
(61) Patent of Addition to Application Number :NA
Filing Date :NA
(62) Divisional to Application Number :1310/DELNP/2007
Filed on :19/02/2007

(71)**Name of Applicant :**
1)THE GOVERNMENT OF THE UNITED STATES OF AMERICA AS REPRESENTED BY THE SECRETARY OF THE DEPARTMENT OF HEALTH AND HUMAN SERVICES, CENTERS FOR DISEASE CONTROL AND PREVENTION
Address of Applicant :TECHNOLOGY TRANSFER OFFICE, 4770 BUFORD HIGHWAY (K79) ATLANTA, GA 30341, U.S.A U.S.A.
(72)**Name of Inventor :**
1)GWONGJEN J. CHANG
2)WAYNE D. CRILL

(57) Abstract :
An in vitro method for identifying a flavivirus cross-reactive epitope, comprising selecting a candidate cross-reactive epitope using a structure-based design approach, wherein the structure-based design approach, designing a substituted epitope comprising at least one amino acid residue substitution compared to the candidate cross-reactive epitope; contacting the candidate cross-reactive epitope with a specific binding agent under conditions whereby a candidate epitope/specific binding agent complex can form; and contacting the substituted epitope with the specific binding agent under the same conditions used for candidate epitope/specific binding agent complex formation, wherein a candidate cross-reactive epitope is identified as the fiavivirus cross-reactive epitope when the substituted epitope has a substantially lower binding affinity for the specific binding agent compared to the candidate cross-reactive epitope.

No. of Pages : 149 No. of Claims : 7

(12) PATENT APPLICATION PUBLICATION
(19) INDIA
(22) Date of filing of Application :17/04/2012
(21) Application No.3295/DELNP/2012 A
(43) Publication Date : 23/10/2015

(54) Title of the invention : SAWING ROPE

(51) International classification :B23D 61/18
(31) Priority Document No :09176164.3
(32) Priority Date :17/11/2009
(33) Name of priority country :EUROPEAN UNION
(86) International Application No :PCT/EP2010/067527
Filing Date :16/11/2010
(87) International Publication No :WO 2011/061166
(61) Patent of Addition to Application Number :NA
Filing Date :NA
(62) Divisional to Application Number :NA
Filing Date :NA

(71)**Name of Applicant :**
1)NV BEKAERT SA
Address of Applicant :BEKAERTSTRAAT 2, 8550 ZWEVEGEM, BELGIUM Belgium
(72)**Name of Inventor :**
1)TOM BAEKELANDT
2)ROLAND GROENEN
3)STEVEN VAN DER LINDEN
4)PETER PERSOONE

(57) Abstract :
A sawing rope (270) with abrasive elements (506) fixed on a steel rope (502) with a polymer jacket (504) is de-scribed and claimed. The abrasive elements (506) are made of a metallic sleeve on which an abrasive layer is deposited by means of electrolytic deposition, by means of sintering or by means of cladding for example laser cladding. Characteristic about this saw¬ing rope (270) in view of the prior known sawing ropes is that each sleeve shows a connection or closure. Such a connection makes it possible to attach abrasive elements (506) on the rope without having to thread them on the rope (270) as is needed when making prior-art sawing ropes. The inventive sawing rope (270) can therefore be made in long lengths in a very efficient way.

No. of Pages : 24 No. of Claims : 15

(12) PATENT APPLICATION PUBLICATION
(21) Application No.2360/DEL/2012 A
(19) INDIA
(22) Date of filing of Application :31/07/2012
(43) Publication Date : 23/10/2015

(54) Title of the invention : DEVELOPMENT OF MICROBICIDE USING COMBINATION OF MANNAN THE HIV ENTRY INHIBITOR FOR HUMAN MANNOSE RECEPTOR (HMR) AND TAK-779 AND AMD-3100 THE HIV ENTRY INHIBITORS FOR CD4 CO RECEPTOR FOR PREVENTION OF SEXUAL TRANSMISSION OF HIV

(51) International classification :A61K
(31) Priority Document No :NA
(32) Priority Date :NA
(33) Name of priority country :NA
(86) International Application No :NA
Filing Date :NA
(87) International Publication No : NA
(61) Patent of Addition to Application Number :NA
Filing Date :NA
(62) Divisional to Application Number :NA
Filing Date :NA

(71)**Name of Applicant :**
1)INDIAN COUNCIL OF MEDICAL RESEARCH
Address of Applicant :V. RAMALINGASWAMI BHAWAN, ANSARI NAGAR, NEW DELHI-110029 Delhi India
(72)**Name of Inventor :**
1)A H BANDIVDEKAR
2)SASHAINA FANIBUNDA
3)SHIPA VELHAL
4)PADMA V. DEVARAJAN

(57) Abstract :
This invention relates to a pharmaceutical formulation for the prevention of sexual transmission of HIV, comprising Mannan, Tak-779 and AMD-3100.

No. of Pages : 11 No. of Claims : 7

(12) PATENT APPLICATION PUBLICATION
(19) INDIA
(22) Date of filing of Application :13/04/2012
(21) Application No.3220/DELNP/2012 A
(43) Publication Date : 23/10/2015

(54) Title of the invention : ORGANIC LED ELEMENT, GLASS FRIT FOR DIFFUSION LAYER FOR USE IN ORGANIC LED ELEMENT, AND METHOD FOR PRODUCTION OF DIFFUSION LAYER FOR USE IN ORGANIC LED ELEMENT

(51) International classification :H05B 33/02
(31) Priority Document No :2009-238674
(32) Priority Date :15/10/2009
(33) Name of priority country :Japan
(86) International Application No :PCT/JP2010/068094
Filing Date :14/10/2010
(87) International Publication No :WO 2011/046190
(61) Patent of Addition to Application Number :NA
Filing Date :NA
(62) Divisional to Application Number :NA
Filing Date :NA

(71)**Name of Applicant :**
1)ASAHI GLASS COMPANY, LIMITED
Address of Applicant :5-1, MARUNOUCHI 1-CHOME, CHIYODA-KU, TOKYO 100-8405 (JP) Japan
(72)**Name of Inventor :**
1)AOKI, YUMIKO
2)WADA, NAOYA
3)NAKAMURA, NOBUHIRO
4)OSAKI, YASUKO

(57) Abstract :
The present invention relates to an organic LED element sequentially including: a transparent substrate; a scattering layer; a first electrode; an organic layer; and a second electrode, in which the scattering layer includes a first glass material and a second glass material dispersed in the first glass material and having a different refractive index from the first glass material.

No. of Pages : 77 No. of Claims : 15

(12) PATENT APPLICATION PUBLICATION
(19) INDIA
(22) Date of filing of Application :13/04/2012

(21) Application No.3221/DELNP/2012 A
(43) Publication Date : 23/10/2015

(54) Title of the invention : METHOD AND BACKGROUND ESTIMATOR FOR VOICE ACTIVITY DETECTION

(51) International classification :G10L 21/02
(31) Priority Document No :61/252,858
(32) Priority Date :19/10/2009
(33) Name of priority country :U.S.A.
(86) International Application No :PCT/SE2010/051116
Filing Date :18/10/2010
(87) International Publication No :WO 2011/049514
(61) Patent of Addition to Application Number :NA
Filing Date :NA
(62) Divisional to Application Number :NA
Filing Date :NA

(71)**Name of Applicant :**
1)TELEFONAKTIEBOLAGET LM ERICSSON (PUBL)
Address of Applicant :SE-164 83 STOCKHOLM (SE) Sweden
(72)**Name of Inventor :**
1)SEHLSTGEDT, MARTIN

(57) Abstract :
The present invention relates to a method and a background estimator in voice activity detector for updating a background noise estimate for an input signal. The input signal for a current frame is received and it is determined whether the current frame of the input signal comprises non-noise. Further, an additional determination is performed whether the current frame of the non-noise input comprises noise by analyzing characteristics at least related to correlation and energy level of the input signal, and background noise estimate is updated if it is determined that the current frame comprises noise.

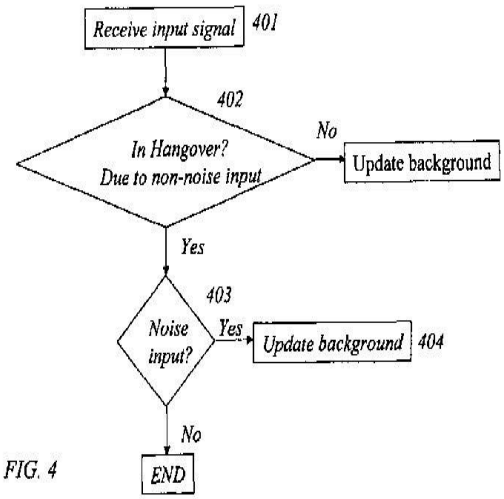

FIG. 4

No. of Pages : 32 No. of Claims : 18

(12) PATENT APPLICATION PUBLICATION
(21) Application No.3303/DELNP/2012 A
(19) INDIA
(22) Date of filing of Application :17/04/2012
(43) Publication Date : 23/10/2015

(54) Title of the invention : WATER HEATING APPARATUS FOR CONTINUOUS HEATED WATER FLOW AND METHOD FOR USE IN HYDRAULIC FRACTURING

(51) International classification :E21B 43/26
(31) Priority Document No :61/276,950
(32) Priority Date :18/09/2009
(33) Name of priority country :U.S.A.
(86) International Application No :PCT/US2010/045791
Filing Date :17/08/2010
(87) International Publication No :WO 2011/034679
(61) Patent of Addition to Application Number :NA
Filing Date :NA
(62) Divisional to Application Number :NA
Filing Date :NA

(71)**Name of Applicant :**
1)HEAT ON-THE-FLY, LLC
Address of Applicant :1027 WEST 11TH AVENUE, COVINGTON, LA 70433, USA U.S.A.
(72)**Name of Inventor :**
1)RANSOM MARK HEFLEY

(57) Abstract :
A method of hydraulic fracturing of an oil producing formation includes the provision of a heating apparatus which is transportable and that has a vessel for containing water. The method contemplates heating the water up to a temperature of about 200° F (93.3□C). A water stream of cool or cold water is transmitted from a source to a mixer, the cool water stream being at ambient temperature. The mixer has an inlet that receives cool or cold water from the source and an outlet that enables a discharge of a mix of cool or cold water and the hot water. After mixing in the mixer, the water assumes a temperature that is suitable for mixing with chemicals that are used in the fracturing process, such as a temperature of about 40°-120°F+ (4.4 -48.9□C+). An outlet discharges a mix of the cool and hot water to surge tanks or to mixing tanks. In the mixing tanks, a proppant and an optional selected chemical or chemicals are added to the water which has been warmed. From the mixing tanks, the water with proppant and optional chemicals is injected into the well for part of the hydraulic fracturing operation. The mixer preferably employs lateral fittings that enable heated water to enter the mixer bore at an acute angle. The mixer can also provide a lateral fitting that exits the mixer bore upstream of the first lateral fitting, the second lateral fitting transmitting water via a conduit such as a hose to the heater.

No. of Pages : 43 No. of Claims : 101

(12) PATENT APPLICATION PUBLICATION
(19) INDIA
(22) Date of filing of Application :17/04/2012
(21) Application No.3304/DELNP/2012 A
(43) Publication Date : 23/10/2015

(54) Title of the invention : COMPACT REVERSIBLE UNIVERSAL MILL FOR PRODUCING MEDIUM-LARGE SECTIONS

(51) International classification :B21B 1/14
(31) Priority Document No :MI 2009 A 002113
(32) Priority Date :01/12/2009
(33) Name of priority country :Italy
(86) International Application No :PCT/EP/2010/066606
Filing Date :02/11/2010
(87) International Publication No :WO 2011/067055
(61) Patent of Addition to Application Number :NA
Filing Date :NA
(62) Divisional to Application Number :NA
Filing Date :NA

(71)**Name of Applicant :**
1)SIEMENS VAI METALS TECHNOLOGIES S.R.L.
Address of Applicant :LUIGI POMINI, 92, I-21050 MARNATE, ITALY Italy
(72)**Name of Inventor :**
1)ANDREA DELLI ZOTTI
2)MARCO LANGE
3)DOMENICO VERGARA

(57) Abstract :
A compact reversible universal mill for producing medium-large sections comprising a universal reducing stand (14), a two-high stand (15) and a universal stand (16) to create a reversible intermediate unit (12) across a roller way (13) carrying a bar (17) being worked, said mill being provided immediately downstream of said reversible intermediate unit (12) with a finishing stand (11) as the final additional stand also across the shared roller way (13) or respectively moveable perpendicularly (according to F) in relation to said roller way (13), the finishing stand (11) being kept open or respectively closed during intermediate passes of the cycle and being closed or respectively used on said roller way (13) only before the bar (17) completes the final pass of the production cycle.

No. of Pages : 17 No. of Claims : 7

(12) PATENT APPLICATION PUBLICATION
(21) Application No.1043/DEL/2014 A
(19) INDIA
(22) Date of filing of Application :16/04/2014
(43) Publication Date : 23/10/2015

(54) Title of the invention : NOVEL 1, 3-DIARYL PYRAZOLE COMPOUNS AND THEIR USE IN INFLAMMATORY RELATED DISORDERS

(51) International classification :C07D231/12,
(31) Priority Document No :NA
(32) Priority Date :NA
(33) Name of priority country :NA
(86) International Application No :NA
Filing Date :NA
(87) International Publication No : NA
(61) Patent of Addition to Application Number :NA
Filing Date :NA
(62) Divisional to Application Number :NA
Filing Date :NA

(71)**Name of Applicant :**
1)GOEL, NEELIMA
Address of Applicant :K.P.-352, FIRST FLOOR, MAURYA ENCLAVE, PITAM PURA, DELHI - 110034, INDIA. Delhi India
2)KUMAR, SURESH
3)BAWA, SANDHYA
(72)**Name of Inventor :**
1)GOEL, NEELIMA
2)KUMAR, SURESH
3)BAWA, SANDHYA

(57) Abstract :
Disclosed herein a class of 1,3-diaryl pyrazole compounds useful in treating inflammation and inflammation-related disorders. Also disclosed herein, the method manufacturing and pharmaceutical compositions of those compounds. The compounds of particular interest are defined by Formula I.

No. of Pages : 26 No. of Claims : 7

(12) PATENT APPLICATION PUBLICATION
(19) INDIA
(22) Date of filing of Application :13/04/2012
(21) Application No.3208/DELNP/2012 A
(43) Publication Date : 23/10/2015

(54) Title of the invention : UPRIGHT VACUUM CLEANING APPLIANCE WITH HAND

(51) International classification :A47L 5/32
(31) Priority Document No :0918039.9
(32) Priority Date :15/10/2009
(33) Name of priority country :U.K.
(86) International Application No :PCT/GB2010/051626
Filing Date :29/09/2010
(87) International Publication No :WO 2011/045578
(61) Patent of Addition to Application Number :NA
Filing Date :NA
(62) Divisional to Application Number :NA
Filing Date :NA

(71)**Name of Applicant :**
1)DYSON TECHNOLOGY LIMITED
Address of Applicant :TETBURY HILL, MALMESBURY WILTSHIRE, SN16 0RP UNITED KINGDOM U.K.
(72)**Name of Inventor :**
1)DOS REIS, DAVID
2)NEWTON, DAVID CHRISTOPHER JAMES
3)BRYDEN, JAMES JOHN

(57) Abstract :
An upright cleaning appliance is described which comprises a reclining upright body and a cleaner head, the cleaner head being connected to the upright body and manoeuvrable across a floor surface using a handle fixed to the upright body. The appliance further comprises a substantially rigid wand which is connected to a suction inlet on the vacuum cleaner by a flexible hose and which is suitable for use in cleaning above the floor. The wand is configured for storage on-board the vacuum cleaner with a first portion of the wand constrained relative to the handle and a second portion of the wand constrained relative to a lower part of the upright body so that the wand braces the handle to said lower part.

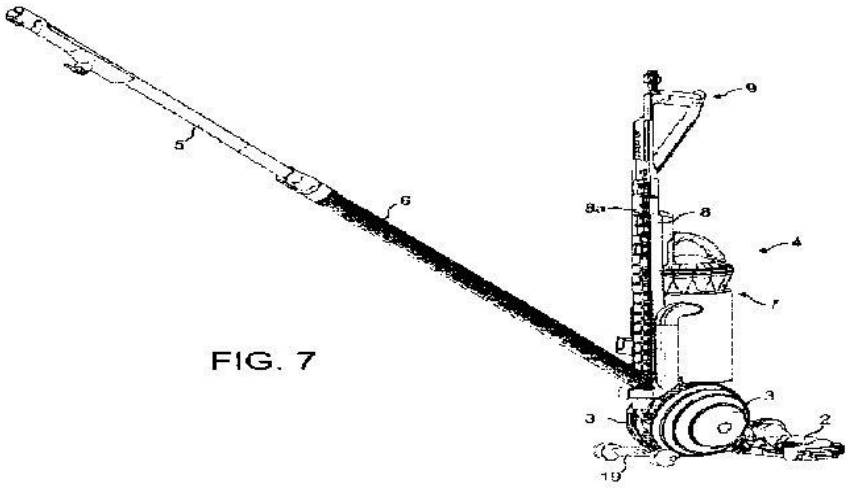

FIG. 7

No. of Pages : 41 No. of Claims : 12

(12) PATENT APPLICATION PUBLICATION
(19) INDIA
(22) Date of filing of Application :13/04/2012
(21) Application No.3209/DELNP/2012 A
(43) Publication Date : 23/10/2015

(54) Title of the invention : VIRUS LIKE PARTICLES COMPRISING TARGET PROTEINS FUSED TO PLANT VIRAL COAT PROTEINS

(51) International classification :A61K 39/145
(31) Priority Document No :61/243,774
(32) Priority Date :18/09/2009
(33) Name of priority country :U.S.A.
(86) International Application No :PCT/US2010/049089
Filing Date :16/09/2010
(87) International Publication No :WO 2011/035004
(61) Patent of Addition to Application Number :NA
Filing Date :NA
(62) Divisional to Application Number :NA
Filing Date :NA

(71)**Name of Applicant :**
1)FRAUNHOFER USA INC.
Address of Applicant :CENTER FOR MOLECULAR BIOTECHNOLOGY, 9 INNOVATION WAY, NEWARK, DE 19711-5449, USA U.S.A.
(72)**Name of Inventor :**
1)YUSIBOV, VIDADI
2)FARRANCE, CHRISTINE, E.
3)MUSIYCHUK, KONSTANTIN, A.
4)METT, VADIM
5)METT, VALENTINA

(57) Abstract :
Virus like particles comprising a fusion protein and substantially free of nucleic acid, wherein the fusion protein comprises a plant viral coat protein and a target protein, are provided. Immunogenic compositions comprising the virus like particles can be administered to subjects to induce protective immune responses in the subjects. Methods of producing the virus like particles are also provided.

No. of Pages : 120 No. of Claims : 25

(12) PATENT APPLICATION PUBLICATION
(19) INDIA
(22) Date of filing of Application :17/04/2012
(21) Application No.3300/DELNP/2012 A
(43) Publication Date : 23/10/2015

(54) Title of the invention : HEAT EXCHANGER SYSTEM FOR DRY-TYPE TRANSFORMERS

(51) International classification :H01F 27/20
(31) Priority Document No :09015185.3
(32) Priority Date :08/12/2009
(33) Name of priority country :EUROPEAN UNION
(86) International Application No :PCT/EP2010/006767
Filing Date :06/11/2010
(87) International Publication No :WO 2011/069585
(61) Patent of Addition to Application Number :NA
Filing Date :NA
(62) Divisional to Application Number :NA
Filing Date :NA

(71)**Name of Applicant :**
1)ABB TECHNOLOGY AG
Address of Applicant :AFFOLTERNSTRASSE 44, CH-8050 ZURICH, SWITZERLAND Switzerland
(72)**Name of Inventor :**
1)BENJAMIN WEBER
2)BRUNO AGOSTINI
3)JENS TEPPER
4)MARCOS BOCKHOLT
5)STEPHANE SCHAAL

(57) Abstract :
The invention relates to a heal exchanger system tor trans formers or reactors having at least one coil being cooled by gaseous fluids circulating around whereas the arrangement is disposed within an enclosure wherein a flow of cooling gaseous fluid is passing the coil and being heated by the heat of the transformer or reactor which is directed to pass a themosiphon heat exchanger which dissipates the heat to a cooling media.

No. of Pages : 12 No. of Claims : 16

(12) PATENT APPLICATION PUBLICATION
(19) INDIA
(22) Date of filing of Application :17/04/2012
(21) Application No.3301/DELNP/2012 A
(43) Publication Date : 23/10/2015

(54) Title of the invention : METHOD FOR PROTECTING THE PASSAGE OF AIR IN A DRIVE PART COUPLING IN AN UNPROTECTED ENVIRONMENT, COUPLING FOR IMPLEMENTATION, AND ROTOR LINE FITTED WITH SUCH COUPLINGS

(51) International classification :F01D 5/06
(31) Priority Document No :0957653
(32) Priority Date :30/10/2009
(33) Name of priority country :France
(86) International Application No :PCT/FR2010/052170
Filing Date :13/10/2010
(87) International Publication No :WO 2011/051592
(61) Patent of Addition to Application Number :NA
Filing Date :NA
(62) Divisional to Application Number :NA
Filing Date :NA

(71)**Name of Applicant :**
1)TURBOMECA
Address of Applicant :BP 2, F-64510 BORDES, FRANCE France
(72)**Name of Inventor :**
1)PASCAL PIERRE LE BRUSQ
2)JEAN-PHILIPPE OUSTY
3)LIONEL SCUILLER

(57) Abstract :
The invention aims to prevent the blockage of air passages in the curvic couplings between drive parts and also to prevent the potential damage to said drive parts during weakening of protective elements. To this end, the invention envisages the formation of axial abutments by the ring gears of the curvic couplings. A coupling, according to the invention, comprises two rings (22, 24), each ring being on the end of one drive part (12,14) and engaged with the other so as to transmit to said drive part a rotation around a central axis (XX) while allowing air (F2, F4) to pass between the male and female portions of the teeth of the rings behind a bearing area Za. The rings (22, 24) are extended in an at least partially radial manner relative to each other such as to form an outer ring extension (22e) and an inner ring extension (24i) respectively facing the elements (19,16) surrounding the drive part (14, 12) that is mounted onto the other ring (24, 22). The invention is of use in the rotor lines of turbine engines.

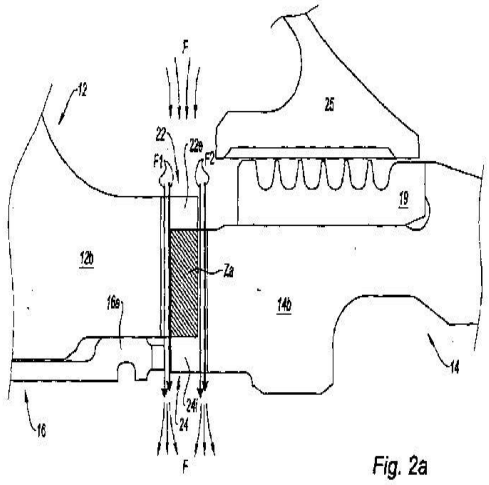

Fig. 2a

No. of Pages : 19 No. of Claims : 9

(12) PATENT APPLICATION PUBLICATION
(19) INDIA
(22) Date of filing of Application :13/04/2012
(21) Application No.3222/DELNP/2012 A
(43) Publication Date : 23/10/2015

(54) Title of the invention : EQUALIZATION AND RESIDUAL SELF-INTERFERENCE SUPPRESSION USING SERIAL LOCALIZATION WITH INDECISION

(51) International classification :H04L 25/03
(31) Priority Document No :12/572, 692
(32) Priority Date :02/10/2009
(33) Name of priority country :U.S.A.
(86) International Application No :PCT/IB2010/054428
Filing Date :30/09/2010
(87) International Publication No :WO 2011/039726
(61) Patent of Addition to Application Number :NA
Filing Date :NA
(62) Divisional to Application Number :NA
Filing Date :NA

(71)**Name of Applicant :**
1)TELEFONAKTIEBOLAGET LM ERICSSON (PUBL)
Address of Applicant :SE-164 83 STOCKHOLM (SE) Sweden
(72)**Name of Inventor :**
1)KHAYRALLAH, ALI S.

(57) Abstract :
A constellation processing module of a receiver groups points of a constellation associated with a transmitted signal into a plurality of subsets. At least two adjacent ones of the subsets have one or more common constellation points so that the at least two adjacent subsets overlap. The constellation processing module also determines a centroid-based value for each of the subsets of constellation points. A non-final equalization stage localizes a search for a final symbol decision using a set of the centroid-based values as constellation points. An interference suppresser suppresses residual self-interference which arises from using the set of centroid-based values as constellation points to localize the search for the final symbol decision instead of the constellation points used to modulate the transmitted signal. A final equalization stage determines the final symbol decision using a subset of the constellation points used to modulate the transmitted signal.

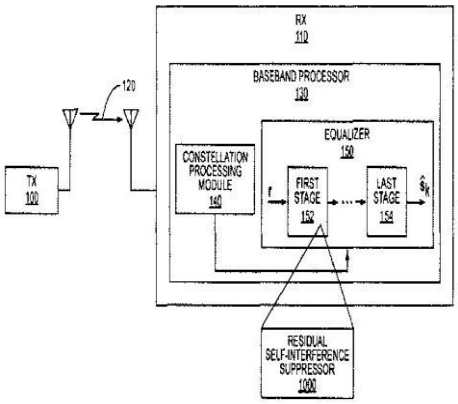

FIG. 1

No. of Pages : 43 No. of Claims : 24

(12) PATENT APPLICATION PUBLICATION
(21) Application No.3223/DELNP/2012 A
(19) INDIA
(22) Date of filing of Application :13/04/2012
(43) Publication Date : 23/10/2015

(54) Title of the invention : GLASS FOR DIFFUSION LAYER IN ORGANIC LED ELEMENT, AND ORGANIC LED ELEMENT UTILIZING SAME

(51) International classification	:C03C 3/19
(31) Priority Document No	:2009-238676
(32) Priority Date	:15/10/2009
(33) Name of priority country	:Japan
(86) International Application No	:PCT/JP2010/067985
Filing Date	:13/10/2010
(87) International Publication No	:WO 2011/046156
(61) Patent of Addition to Application Number	:NA
Filing Date	:NA
(62) Divisional to Application Number	:NA
Filing Date	:NA

(71)**Name of Applicant :**
1)ASAHI GLASS COMPANY, LIMITED
Address of Applicant :5-1, MARUNOUCHI 1-CHOME, CHIYODA-KU, TOKYO 100-8405 (JP) Japan
(72)**Name of Inventor :**
1)WADA NAOYA
2)NAKAMURA NOBUHIRO

(57) Abstract :
The present invention relates to a glass for a scattering layer of an organic LED element, which contains, in terms of mol% on the basis of oxides, 0-20% of P2O5, 15-60% of B2O3, 15-28% of Bi2O3 and 20-50% of ZnO, in which a value obtained by dividing the content of P2O9 by the content of ZnO is less than 0.48, the sum of the contents of P2O5 and B2O3 is 30-60%, the content of P2O3 is 10% or less when the sum of the contents of P2O5 and B2O3 exceeds 50%, and the glass does not substantially contain lead (PbO or Pb3O4), Li2O, Na2O and K2O, except for those contained as impurities.

No. of Pages : 44 No. of Claims : 11

(12) PATENT APPLICATION PUBLICATION
(19) INDIA
(22) Date of filing of Application :13/04/2012
(21) Application No.3224/DELNP/2012 A
(43) Publication Date : 23/10/2015

(54) Title of the invention : STACKING OF GLOVES

(51) International classification :B65H 5/22
(31) Priority Document No :0918345.0
(32) Priority Date :20/10/2009
(33) Name of priority country :U.K.
(86) International Application No :PCT/GB2010/051765
Filing Date :20/10/2010
(87) International Publication No :WO 2011/048414
(61) Patent of Addition to Application Number :NA
Filing Date :NA
(62) Divisional to Application Number :NA
Filing Date :NA

(71)**Name of Applicant :**
1)ALTEVO LIMITED
Address of Applicant :THE TECHNOLOGY CENTRE, STATION ROAD, FRAMLINGHAM, WOODBRIDGE, SUFFOLK IP13 9EZ, UNITED KINGDOM, U.K.
(72)**Name of Inventor :**
1)STOLLERY, JONATHAN WILLIAM
2)STOLLERY, KIM MARIE

(57) Abstract :
The present invention relates to a glove stacking apparatus for preparing a stack of gloves prior to packing into a box, and to a method of stacking gloves using a glove stacking apparatus for preparing a stack of gloves prior to packing into a box, particularly ambidextrous disposable hygienic gloves. A glove stacking apparatus for lifting and depositing gloves to be stacked comprises a lifting means for lifting each of said gloves. The lifting means includes an attractive glove lifting surface, wherein the lifting means includes within the lifting surface a movable member, the movable member being movable from a first position in which the movable member is substantially flush with the lifting surface to a second position in which the movable member stands proud of the lifting surface in order to help dislodge said lifted glove from the lifting surface. The movable member has a surface that is permeable to air flow through said surface, the glove lifting means including a source of positive air pressure and means to control the application of said positive air pressure through said permeable surface of the movable member in order to control the dislodging of said lifted glove from the glove lifting surface.

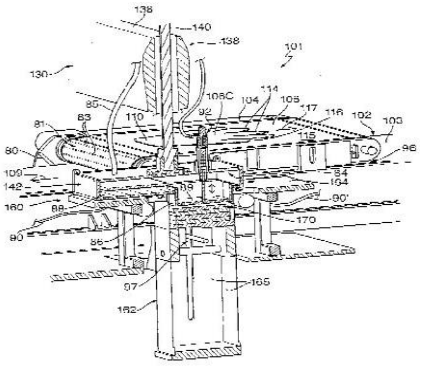

Fig. 11

No. of Pages : 56 No. of Claims : 27

(12) PATENT APPLICATION PUBLICATION
(19) INDIA
(22) Date of filing of Application :17/04/2012
(21) Application No.3319/DELNP/2012 A
(43) Publication Date : 23/10/2015

(54) Title of the invention : METHOD FOR TREATING A SUPPORTED CATALYST

(51) International classification :B01J 23/38
(31) Priority Document No :NA
(32) Priority Date :NA
(33) Name of priority country :NA
(86) International Application No :PCT/US2009/068382
Filing Date :17/12/2009
(87) International Publication No :WO 2011/075127
(61) Patent of Addition to Application Number :NA
Filing Date :NA
(62) Divisional to Application Number :NA
Filing Date :NA

(71)**Name of Applicant :**
1)UTC POWER CORPORATION
Address of Applicant :ONE FINANCIAL PLAZA, HARTFORD, CONNECTICUT 06101, USA U.S.A.
2)TOYOTA JIDOSHA KABUSHIKI KAISHA
3)THE RESEARCH FOUNDATION OF STATE UNIVERSITY OF NEW YORK
(72)**Name of Inventor :**
1)KAWAMURA TETSUO
2)SHAO MINHUA
3)PROTSAILO LESIA V.
4)ZHONG CHUAN-JIAN
5)WANJALA BRIGID
6)LUO JIN
7)NJOKI PETER N.
8)LOUKRAKPAM RAMESHWORI

(57) Abstract :
A method for treating a supported catalyst includes establishing shell-removal conditions for a supported catalyst that includes nanoparticles of a catalyst material on a carbon support. The nanoparticles each include a platinum alloy core capped in an organic shell. The shell-removal conditions include an elevated temperature and an inert gas atmosphere that is substantially free of oxygen. The organic shell is then removed from the platinum alloy core in the shell-removal conditions.

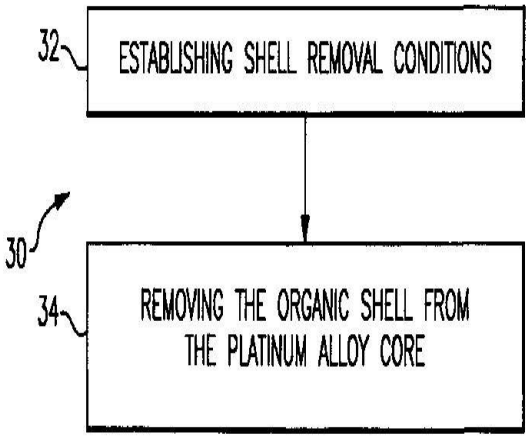

FIG.3

No. of Pages : 15 No. of Claims : 19

(12) PATENT APPLICATION PUBLICATION
(19) INDIA
(22) Date of filing of Application :13/04/2012

(21) Application No.3230/DELNP/2012 A
(43) Publication Date : 23/10/2015

(54) Title of the invention : CONSTRUCTION MACHINE

(51) International classification :E02F 9/00
(31) Priority Document No :2010-132204
(32) Priority Date :09/06/2010
(33) Name of priority country :Japan
(86) International Application No :PCT/JP2011/061688
Filing Date :20/05/2011
(87) International Publication No :WO 2011/155309
(61) Patent of Addition to Application Number :NA
Filing Date :NA
(62) Divisional to Application Number :NA
Filing Date :NA

(71)**Name of Applicant :**
1)HITACHI CONSTRUCTION MACHINERY CO., LTD.
Address of Applicant :5-1, KORAKU 2-CHOME, BUNKYO-KU, TOKYO 112-5863, JAPAN Japan
(72)**Name of Inventor :**
1)TAKISHITA TATSUO
2)NASU KATSUYOSHI
3)KURIKUMA HAJIME

(57) Abstract :
A construction machine that can limit consumption of battery electric power is provided. The construction machine includes: air-cooled heat exchangers 47, 48; a cooling fan 49 for generating cooling air for the heat exchangers 47, 48; a fan electric drive motor 50 that is driven by electric power of a battery 8 for rotating the cooling fan 49; an inverter unit 30 for drivingly controlling the fan electric drive motor 50; a lock lever 25 disposed at a boarding-alighting port and configured to be operated into an unlocked position and a locked position; and a lock valve 42 for making an operation of an operating device 27 or the like ineffective or the operating device inoperative when the lock lever 25 is operated into the locked position. The inverter unit 30 stops the fan electric drive motor 50 when the lock lever 25 is operated into the locked position.

FIG. 4

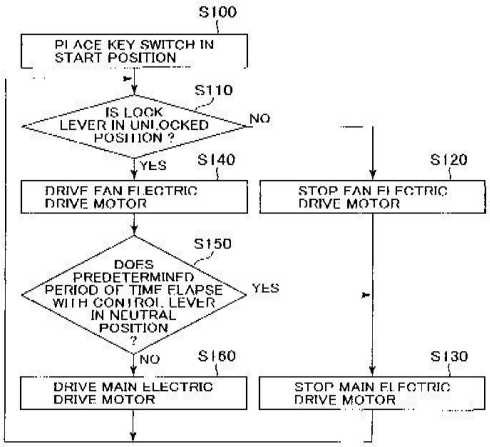

No. of Pages : 43 No. of Claims : 4

(12) PATENT APPLICATION PUBLICATION
(19) INDIA
(22) Date of filing of Application :13/04/2012
(21) Application No.3231/DELNP/2012 A
(43) Publication Date : 23/10/2015

(54) Title of the invention : STOCK SOLUTIONS HAVING HIGH CONCENTRATIONS OF POLYMERS COMPRISING OILS OF PLANT AND/OR ANIMAL ORIGIN FOR THE PREPARATION OF BITUMEN/POLYMER COMPOSITIONS

(51) International classification :C08J 3/22
(31) Priority Document No :FR 0904927
(32) Priority Date :14/10/2009
(33) Name of priority country :France
(86) International Application No :PCT/IB2010/054660
Filing Date :14/10/2010
(87) International Publication No :WO 2011/045766
(61) Patent of Addition to Application Number :NA
Filing Date :NA
(62) Divisional to Application Number :NA
Filing Date :NA

(71)**Name of Applicant :**
1)TOTAL RAFFINAGE MARKETING
Address of Applicant :24, COURS MICHELET, F-92800 PUTEAUX, FRANCE France
(72)**Name of Inventor :**
1)DREESSEN, SYLVIA
2)DULAC, GUILLAUME

(57) Abstract :
The present invention relates to a mother solution free from oil of petroleum origin comprising at least one oil of vegetable and/or animal origin, from 20% to 50% by mass of polymer, with respect to the mass of the mother solution, with or without at least one cross-linking agent, said oil of vegetable and/or animal origin being acid, with an acid value measured according to the standard NF EN ISO 660 comprised between 50 and 300 mg KOH/g.This mother solution with a very high concentration of polymer is stable and does not gel and can therefore be diluted and used for preparing cross-linked bitumen/polymer compositions, then bituminous mixes.

No. of Pages : 22 No. of Claims : 20

(12) PATENT APPLICATION PUBLICATION
(19) INDIA
(22) Date of filing of Application :17/04/2012
(21) Application No.3312/DELNP/2012 A
(43) Publication Date : 23/10/2015

(54) Title of the invention : FUSED RING ANALOGUES OF ANTI-FIBROTIC AGENTS

(51) International classification :C07D 413/04
(31) Priority Document No :61/253,889
(32) Priority Date :22/10/2009
(33) Name of priority country :U.S.A.
(86) International Application No :PCT/AU2010/001398
Filing Date :21/10/2010
(87) International Publication No :WO 2011/047432
(61) Patent of Addition to Application Number :NA
Filing Date :NA
(62) Divisional to Application Number :NA
Filing Date :NA

(71)**Name of Applicant :**
1)FIBROTECH THERAPEUTICS PTY LTD.
Address of Applicant :UNIT 1, 257 COLLINS STREET, MELBOURNE, VICTORIA 3000, AUSTRALIA Australia
(72)**Name of Inventor :**
1)WILLIAMS, SPENCER JOHN
2)ZAMMIT, STEVEN
3)KELLY, DARREN JAMES

(57) Abstract :
The present invention relates to arylcarbonyl and heteroarylcarbonyl anthranilate compounds that may be useful as anti-fibrotic agents. The present invention also relates to methods for their preparation, pharmaceutical compositions containing these compounds and uses of these compounds in the treatment disorders.

No. of Pages : 159 No. of Claims : 135

(12) PATENT APPLICATION PUBLICATION
(19) INDIA
(22) Date of filing of Application :17/04/2012
(21) Application No.3313/DELNP/2012 A
(43) Publication Date : 23/10/2015

(54) Title of the invention : MULTI-PHASE STATOR DEVICE

(51) International classification :H02K 1/14
(31) Priority Document No :PA 2009 70119
(32) Priority Date :21/09/2009
(33) Name of priority country :Denmark
(86) International Application No :PCT/EP2010/063796
Filing Date :20/09/2010
(87) International Publication No :WO 2011/033106
(61) Patent of Addition to Application Number :NA
Filing Date :NA
(62) Divisional to Application Number :NA
Filing Date :NA

(71)**Name of Applicant :**
1)HOGANAS AB (PUBL)
Address of Applicant :S-263 83, HOGANAS SWEDEN Sweden
(72)**Name of Inventor :**
1)ATKINSON, GLYNN JAMES
2)JACK, ALAN G.
3)MECROW, BARRIE

(57) Abstract :
Disclosed is a stator device adapted to be arranged in an electrical machine, where the electrical machine further comprises a moving device, where the stator device is a multi-phase stator device, where the phases are arranged side-by-side in a direction perpendicular to direction of motion of the moving device, and where each phase comprises a first stator core section having a set of teeth, a second stator core section having a set of teeth, and a coil, and where the teeth are arranged to protrude towards the moving device; and wherein at least two neighbouring phases share a stator core section, so that the first stator core section of a first phase and a second stator core section of a second phase is formed as a single unit.

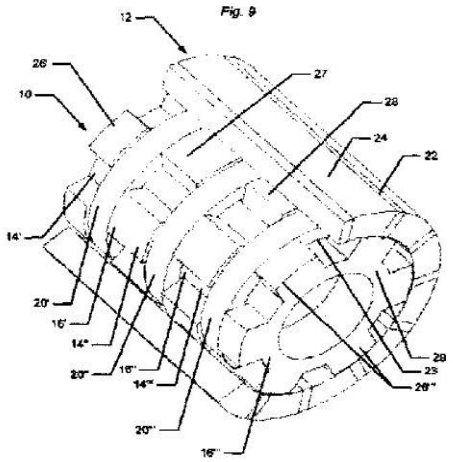

No. of Pages : 46 No. of Claims : 29

(12) PATENT APPLICATION PUBLICATION
(19) INDIA
(22) Date of filing of Application :17/04/2012
(21) Application No.3314/DELNP/2012 A
(43) Publication Date : 23/10/2015

(54) Title of the invention : PHARMACEUTICAL COMPOSITION COMPRISING OMEGA-3 FATTY ACID AND HYDROXY-DERIVATIVE OF A STATIN AND METHODS OF USING SAME

(51) International classification :A61K 38/43
(31) Priority Document No :61/245,086
(32) Priority Date :23/09/2009
(33) Name of priority country :U.S.A.
(86) International Application No :PCT/US2010/050005
Filing Date :23/09/2010
(87) International Publication No :WO 2011/038122
(61) Patent of Addition to Application Number :NA
Filing Date :NA
(62) Divisional to Application Number :NA
Filing Date :NA

(71)**Name of Applicant :**
1)AMARIN CORPORATION PLC
Address of Applicant :FIRST FLOOR, BLOCK 3, THE OVAL, SHELBOURNE ROAD, BALLSBRIDGE, DUBLIN 4 IRELAND Ireland
(72)**Name of Inventor :**
1)ROWE, JONATHAN

(57) Abstract :
In various embodiments, the present invention provides compositions and methods for treating and/or preventing a cardiovascular-related disease in subject in need thereof.

No. of Pages : 40 No. of Claims : 20

(12) PATENT APPLICATION PUBLICATION
(19) INDIA
(22) Date of filing of Application :13/04/2012

(21) Application No.3214/DELNP/2012 A
(43) Publication Date : 23/10/2015

(54) Title of the invention : NAVIGATION DEVICE & METHOD

(51) International classification :G01C 21/30
(31) Priority Document No :PCT/EP2009/063263
(32) Priority Date :12/10/2009
(33) Name of priority country :PCT
(86) International Application No :PCT/EP2009/063263
Filing Date :12/10/2009
(87) International Publication No :WO 2011/044923
(61) Patent of Addition to Application Number :NA
Filing Date :NA
(62) Divisional to Application Number :NA
Filing Date :NA

(71)**Name of Applicant :**
1)TOMTON INTERNATIONAL B.V.
Address of Applicant :REMBRANDTPLEIN 35, NL-1017 CT AMSTERDAM, NETHERLANDS Netherlands
(72)**Name of Inventor :**
1)SERBANESCU, ALEXANDRU

(57) Abstract :
A navigation device comprising a receiver for receiving signals from position sensors, memory having stored therein a seed position and map data which comprises a map of navigable routes in an area, and an output device, such as a display or speaker, for outputting a current location. The navigation device further comprises a processor for determining distance travelled and changes in orientation from the signals and estimating the current location on one of the navigable routes of the map data. The step of estimating comprises using the distance travelled and the changes in orientation to extrapolate from the seed position possible paths along the navigable routes that the navigation device may have travelled and assigning to each path a probability that the navigation device travelled that path. For changes in orientation, the processor expands each path and recalculates the probability that the navigation device travelled that path. The processor assigns the current location to be a current predicted position on the path with the highest probability.

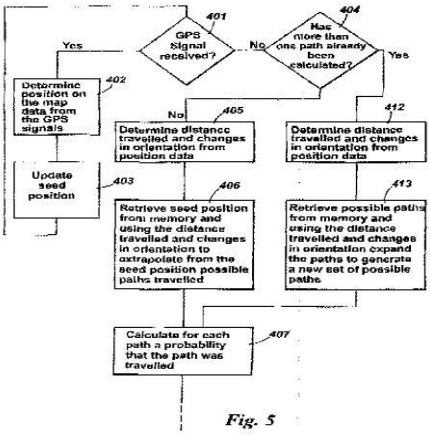

Fig. 5

No. of Pages : 39 No. of Claims : 16

(12) PATENT APPLICATION PUBLICATION
(19) INDIA
(22) Date of filing of Application :13/04/2012
(21) Application No.3215/DELNP/2012 A
(43) Publication Date : 23/10/2015

(54) Title of the invention : DUAL SIDE ACTING HYDRAULIC GRIPS SYNCHRONIZATION

(51) International classification :B25J 15/02
(31) Priority Document No :61/253,139
(32) Priority Date :20/10/2009
(33) Name of priority country :U.S.A.
(86) International Application No :PCT/US2010/050845
Filing Date :30/09/2010
(87) International Publication No :WO 2011/049726
(61) Patent of Addition to Application Number :NA
Filing Date :NA
(62) Divisional to Application Number :NA
Filing Date :NA

(71)**Name of Applicant :**
1)ILLINOIS TOOL WORKS INC.
Address of Applicant :3600 WEST LAKE AVENUE, GLENVIEW, IL 60026, UNITED STATES OF AMERICA U.S.A.
(72)**Name of Inventor :**
1)WILCOX, JOSEPH

(57) Abstract :
A synchronized gripping mechanism is provided which includes coupled slider-crank mechanisms. The coupled mechanisms each include a sliding grip and an intermediate link connected by a pivotal connector. A coupler link is provided on a stationary pivot and which couples and synchronizes the two slider-crank mechanisms. Overload protection structure is provided to prevent damaging the links if one of the sliding grips encounters an off-center specimen.

FIG. 2

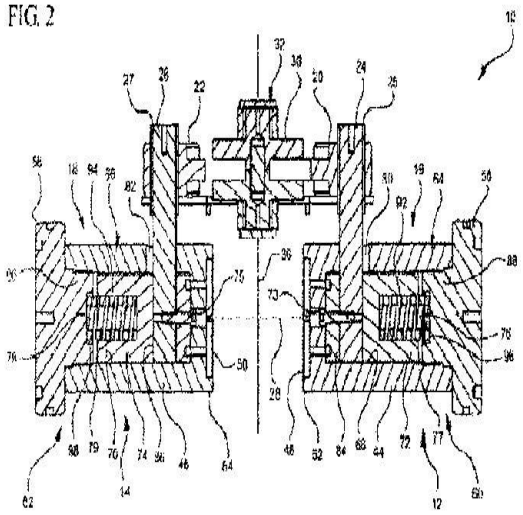

No. of Pages : 45 No. of Claims : 20

(12) PATENT APPLICATION PUBLICATION
(19) INDIA
(22) Date of filing of Application :13/04/2012
(21) Application No.3216/DELNP/2012 A
(43) Publication Date : 23/10/2015

(54) Title of the invention : METHOD AND APPARATUS FOR THE REMOVAL OF ANAESTHETIC AGENTS FROM BREATHING GAS

(51) International classification :A61M 16/00
(31) Priority Document No :1037371
(32) Priority Date :07/10/2009
(33) Name of priority country :Netherlands
(86) International Application No :PCT/NL2010/000141
Filing Date :06/10/2010
(87) International Publication No :WO 2011/043649
(61) Patent of Addition to Application Number :NA
Filing Date :NA
(62) Divisional to Application Number :NA
Filing Date :NA

(71)**Name of Applicant :**
1)ALCMAIR PARTNERS BV
Address of Applicant :KLIPPERSTRAAT 28, NL-1826 DW ALKMAAR, NETHERLANDS Netherlands
(72)**Name of Inventor :**
1)BORM, PIETER
2)WESTERKAMP, BART

(57) Abstract :
Method for the removal of volatile anesthetic agents from breathing gas in an apparatus for respirating of patients provided with a closed line or conduit system in which breathing gas may be circulated, comprising leading the breathing gas or a part thereof through a filtering apparatus with activated carbon, wherein the breathing gas is cooled to a temperature below the boiling point of the anesthetic agent when it passes through the filtering apparatus, characterized in that the breathing gas, after anesthetic agent has condensed out of it, is warmed.

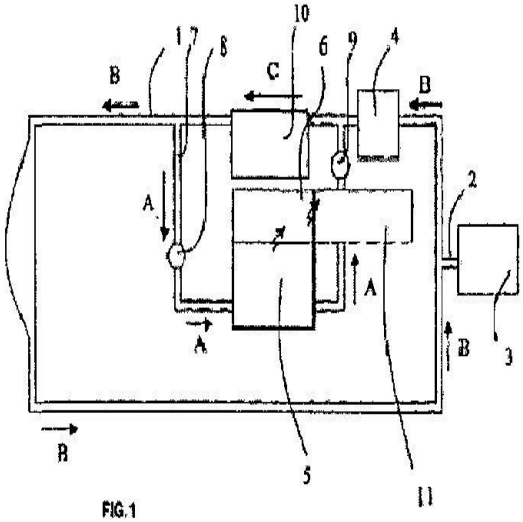

FIG.1

No. of Pages : 13 No. of Claims : 19

(12) PATENT APPLICATION PUBLICATION
(21) Application No.3316/DELNP/2012 A
(19) INDIA
(22) Date of filing of Application :17/04/2012
(43) Publication Date : 23/10/2015

(54) Title of the invention : CONTROL DEVICE AND CONTROL METHOD FOR THE DRIVE UNIT OF A WINDSHIELD WIPER SYSTEM

(51) International classification :B60S 1/08
(31) Priority Document No :10 2009 047 211.8
(32) Priority Date :27/11/2009
(33) Name of priority country :Germany
(86) International Application No :PCT/EP2010/064877
Filing Date :06/10/2010
(87) International Publication No :WO 2011/064026
(61) Patent of Addition to Application Number :NA
Filing Date :NA
(62) Divisional to Application Number :NA
Filing Date :NA

(71)**Name of Applicant :**
1)ROBERT BOSCH GMBH
Address of Applicant :POSTFACT 30 02 20, 70442 STUTTGART, GERMANY Germany
(72)**Name of Inventor :**
1)BRAUN, PETER
2)WANGNER, NORBERT
3)RETSCH, HARALD

(57) Abstract :
Described herein is a control device (160) for controlling a drive unit (120) for at least one wiper arm (140) of a vehicle windscreen wiper system (100), wherein the control device (160) is configured to determine at least one load quantity (L) of the drive unit (120) and to adjust the wiping frequency (WH) of the wiper arm (140) by means of a ratio of the determined load quantity (L) to at least one load threshold value (LS). In an embodiment, the control device (160) is configured to carry out an adjustment of the wiping frequency (WH) as a function of a current driving speed (v) of the vehicle.

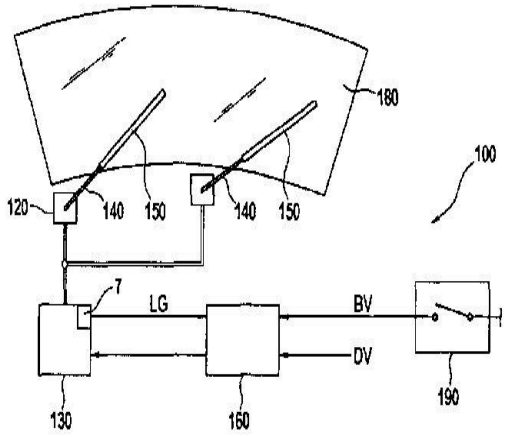

FIG. 1

No. of Pages : 24 No. of Claims : 14

(12) PATENT APPLICATION PUBLICATION
(19) INDIA
(22) Date of filing of Application :17/04/2012
(21) Application No.3317/DELNP/2012 A
(43) Publication Date : 23/10/2015

(54) Title of the invention : METHOD AND APPARATUS FOR MANAGING OPERATIONS OF A COMMUNICATION DEVICE

(51) International classification :H04W 88/06
(31) Priority Document No :12/577,178
(32) Priority Date :10/10/2009
(33) Name of priority country :U.S.A.
(86) International Application No :PCT/US2010/056413
Filing Date :11/11/2010
(87) International Publication No :WO 2011/044592
(61) Patent of Addition to Application Number :NA
Filing Date :NA
(62) Divisional to Application Number :NA
Filing Date :NA

(71)**Name of Applicant :**
1)PARATEK MICROWAVE, INC.
Address of Applicant :22 TECHNOLOGY PARK, MILLYARD TECHNOLOGY PARK, NASHUA, NH 03060 USA. U.S.A.
(72)**Name of Inventor :**
1)MANSEEN KEITH R.
2)GREENE MATTHEW R.
3)HOIRUP CARSTEN

(57) Abstract :
A system that incorporates teachings of the present disclosure may include, for example, a communication device having a controller to provision a matching network that controls one or more operational characteristics of one of a receiver portion and a transmitter portion of the communication device according to a profile describing one or more characteristics of a communication system from which the communication device operates. Additional embodiments are disclosed.

No. of Pages : 39 No. of Claims : 35

(12) PATENT APPLICATION PUBLICATION
(21) Application No.3226/DELNP/2012 A
(19) INDIA
(22) Date of filing of Application :13/04/2012
(43) Publication Date : 23/10/2015

(54) Title of the invention : PHOSPHOLIPASES, NUCLEIC ACIDS ENCODING THEM AND METHODS FOR MAKING AND USING THEM

(51) International classification :C07H 21/00
(31) Priority Document No :61/252,313
(32) Priority Date :16/10/2009
(33) Name of priority country :U.S.A.
(86) International Application No :PCT/US2010/051903
Filing Date :08/10/2010
(87) International Publication No :WO 2011/046812
(61) Patent of Addition to Application Number :NA
Filing Date :NA
(62) Divisional to Application Number :NA
Filing Date :NA

(71)**Name of Applicant :**
1)DSM IP ASSETS B.V.
Address of Applicant :HET OVERLOON 1, NL - 6411 TE HEERLEN, THE NETHERLANDS, Netherlands
(72)**Name of Inventor :**
1)BARTON, NELSON R.
2)HITCHMAN, TIM S.
3)LYON, JONATHAN D.
4)O'DONAGHUE, EILEEN
5)WALL, MARK A.

(57) Abstract :
In alternative embodiments, the invention provides phosphatidylinositol-specific phospholipase C (PI-PLC) enzymes, nucleic acids encoding them, antibodies that bind specifically to them, and methods for making and using them. Industrial methods and products comprising use of these phospholipases are also provided. In certain embodiments, provided herein are methods for hydration of non hydratable phospholipids (NHPs) within a lipid matrix. The methods enable migration of NHPs to an oil-water interface thereby allowing the NHPs to be reacted and/or removed from the lipids. In-certain embodiments, provided is a method for removing NHPs, hydratable phospholipids, and lecithins from vegetable oils to produce a degummed oil or fat product that can be used for food production and/or non-food applications. In certain embodiments, provided herein are methods for hydration of NHPs followed by enzymatic treatment and removal of various phospholipids and lecithins. The methods provided herein can be practiced on either crude or water-degummed oils.

No. of Pages : 311 No. of Claims : 50

(12) PATENT APPLICATION PUBLICATION
(19) INDIA
(22) Date of filing of Application :13/04/2012

(21) Application No.3227/DELNP/2012 A
(43) Publication Date : 23/10/2015

(54) Title of the invention : SOLID FUEL BURNER

(51) International classification :F23L 7/00
(31) Priority Document No :09174622.2
(32) Priority Date :30/10/2009
(33) Name of priority country :EPO
(86) International Application No :PCT/EP2010/066499
Filing Date :29/10/2010
(87) International Publication No :WO 2011/051463
(61) Patent of Addition to Application Number :NA
Filing Date :NA
(62) Divisional to Application Number :NA
Filing Date :NA

(71)**Name of Applicant :**
1)L'AIR LIQUIDE SOCIETE ANONYME POUR L'ETUDE ET L'EXPLOITATION DES PROCEDES GEORGES CLAUDE
Address of Applicant :75 QUAI D'ORSAY F-75007 PARIS, FRANCE France
(72)**Name of Inventor :**
1)BELASSE BRENICE
2)MULON JACQUES
3)PANIER FAUSTINE
4)PAUBEL XAVIER
5)TSIAVA REMI

(57) Abstract :
Burner for conveyor gas propelled particulate solid fuel, said burner comprising a burner block (100) and an injector assembly (200) , the injector assembly being at least partially surrounded by an injector passage (130) of the burner block, the injector assembly comprising an inner oxygen supply pipe (210) surrounding a fuel injector, which in turn surrounds an oxygen injector (230), each having a downstream end (211, 221, 231) on the side of the passage outlet, the inner oxygen supply pipe having a lateral surface onto which are mounted a set of lateral primary oxygen nozzles (212) for the injection of lateral jets of primary oxygen into the fuel injector with an injection orientation which follows a same sense of rotation around the longitudinal direction and which is directed towards the downstream end of the fuel injector, said lateral primary oxygen nozzles being positioned at a number of different distances from the downstream end (221) of the fuel injector.

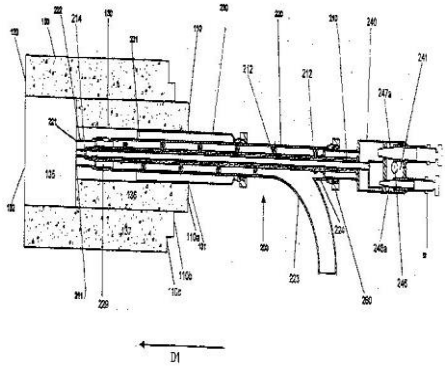

FIG.3

No. of Pages : 27 No. of Claims : 15

(12) PATENT APPLICATION PUBLICATION
(21) Application No.3327/DELNP/2012 A
(19) INDIA
(22) Date of filing of Application :17/04/2012
(43) Publication Date : 23/10/2015

(54) Title of the invention : METHOD FOR PRODUCING BUTANOL USING EXTRACTIVE FERMENTATION WITH OSMOLYTE ADDITION

(51) International classification :C12P 7/16
(31) Priority Document No :61/263,522
(32) Priority Date :23/11/2009
(33) Name of priority country :U.S.A.
(86) International Application No :PCT/US2010/057846
Filing Date :23/11/2010
(87) International Publication No :WO 2011/063402
(61) Patent of Addition to Application Number :NA
Filing Date :NA
(62) Divisional to Application Number :NA
Filing Date :NA

(71)**Name of Applicant :**
1)BUTAMAX,, ADVANCED BIOFUELS LLC
Address of Applicant :200 POWDER MILL ROAD, WILMINGTON, DELAWARE 19803, U.S.A U.S.A.
(72)**Name of Inventor :**
1)PATNAIK, RAJAN
2)GRADY, MICHAEL, CHARLES

(57) Abstract :
A method is provided for producing butanol through microbial fermentation, in which the butanol product is removed during the fermentation by extraction into a water-immiscible organic extractant in the presence of at least one osmolyte at a concentration at least sufficient to increase the butanol partition coefficient relative to that in the presence of the osmolyte concentration of the basal fermentation medium and of an optional fermentable carbon source. The osmolyte may comprise a monosaccharide, a disaccharide, glycerol, sugarcane juice, molasses, polyethylene glycol, dextran, high fructose corn syrup, corn mash, starch, cellulose, and combinations thereof. Also provided is a method and composition for recovering butanol from a fermentation medium.

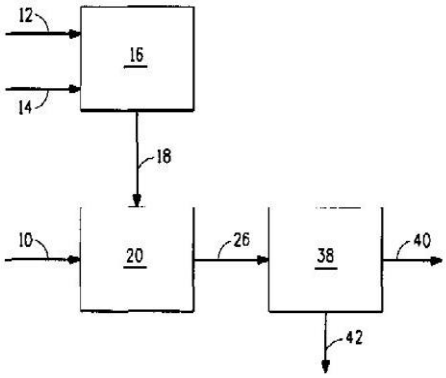

FIG. 1

No. of Pages : 183 No. of Claims : 26

(12) PATENT APPLICATION PUBLICATION
(19) INDIA
(22) Date of filing of Application :17/04/2012
(21) Application No.3328/DELNP/2012 A
(43) Publication Date : 23/10/2015

(54) Title of the invention : CHROMENONE DERIVATIVES WITH ANTI-TUMOUR ACTIVITY •

(51) International classification :A61K
(31) Priority Document No :09306017.6
(32) Priority Date :27/10/2009
(33) Name of priority country :EPO
(86) International Application No :PCT/GB2010/051788
Filing Date :25/10/2010
(87) International Publication No : NA
(61) Patent of Addition to Application Number :NA
Filing Date :NA
(62) Divisional to Application Number :NA
Filing Date :NA

(71)**Name of Applicant :**
1)ASTRAZENECA AB
Address of Applicant :S-151 85 Sodertalje Sweden Sweden
(72)**Name of Inventor :**
1)BALRAAM Bernard Christophe
2)DEGORCE Sebastien Louis
3)LAMBERT-VAN DER BREMPT Christine Marie Paul
4)MORGENTIN Remy Robert
5)PLE Partick

(57) Abstract :
The invention concerns chromenone derivatives of Formula (I) or a pharmaceutically-acceptable salts thereof, wherein each of R1, R2, R3, R4, R5, R6, R7, R8, n and R9 has any of the meanings defined hereinbefore in the description; processes for their preparation, pharmaceutical compositions containing them and their use in the manufacture of a medicament for use in the treatment of cell proliferative disorders.

No. of Pages : 191 No. of Claims : 15

(12) PATENT APPLICATION PUBLICATION
(19) INDIA
(22) Date of filing of Application :13/04/2012
(21) Application No.3228/DELNP/2012 A
(43) Publication Date : 23/10/2015

(54) Title of the invention : PISTON AND ENGINE

(51) International classification :F02F 3/00
(31) Priority Document No :2009-240566
(32) Priority Date :19/10/2009
(33) Name of priority country :Japan
(86) International Application No :PCT/JP2010/063442
Filing Date :02/08/2010
(87) International Publication No :WO 2011/048864
(61) Patent of Addition to Application Number :NA
Filing Date :NA
(62) Divisional to Application Number :NA
Filing Date :NA

(71)**Name of Applicant :**
1)NIIGATA POWER SYSTEMS CO., LTD.
Address of Applicant :9-7, YAESU 2-CHOME, CHUO-KU, TOKYO 1040028 JAPAN Japan
(72)**Name of Inventor :**
1)GOTO SATORU
2)HASHIMOTO TORU
3)WATANABE KOICHI

(57) Abstract :
A piston is provided in which the amount of uncombusted and discharged air-fuel mixture is small, and agglutination of a piston ring due to heat is prevented. In a piston 2 in which plural peripheral grooves in which piston rings are provided are formed in an outer peripheral surface, as the relation between an inner diameter B of a cylinder 1 and a distance L between an upper surface of the piston and an upper surface of a top peripheral groove 4a, L/B < 0.1 holds. A cooling chamber 5a is formed in close vicinity to the top peripheral groove. A dead volume S partitioned with the piston, a cylinder liner 11 and a top piston ring 3a is reduced-, and the amount of air-fuel mixture enclosed here and discharged in uncombusted state is reduced. Further, agglutination of the top piston ring to the cylinder due to thermal load can be prevented with the cooling chamber 5a. The thermal efficiency as an engine is improved in comparison with conventional art.

No. of Pages : 32 No. of Claims : 3

(12) PATENT APPLICATION PUBLICATION
(21) Application No.3229/DELNP/2012 A
(19) INDIA
(22) Date of filing of Application :13/04/2012
(43) Publication Date : 23/10/2015

(54) Title of the invention : BOTH-SIDE FRICTION STIR WELDING METHOD AND APPARATUS AND BOTH-SIDE FRICTION STIR WELDING TOOL SET

(51) International classification :B23K 20/12
(31) Priority Document No :PCT/JP2009/069583
(32) Priority Date :18/11/2009
(33) Name of priority country :PCT
(86) International Application No :PCT/JP2009/069583
Filing Date :18/11/2009
(87) International Publication No :WO 2011/061826
(61) Patent of Addition to Application Number :NA
Filing Date :NA
(62) Divisional to Application Number :NA
Filing Date :NA

(71)**Name of Applicant :**
1)MITSUBISHI-HITACHI METALS MACHINERY, INC.
Address of Applicant :34-6, SHIBA 5-CHOME, MINATO-KU, TOKYO 108-0014 JAPAN Japan
(72)**Name of Inventor :**
1)KAGA SHINICHI
2)ONOSE MITSURU
3)TOMINAGA NORIAKI
4)SAITO TAKEHIKO
5)YOSHIMURA YASUTSUGU
6)HIRANO SATOSHI
7)PARK SEUNG HWAN

(57) Abstract :
To perform both-side friction stir welding superior in economy and high in joint strength, first and second rotary tools 3, 4 include tool bodies 3a, 4a having shoulder portions 3c, 4c formed at tip end portions, respectively, the first rotary tool 3 further includes a protruding portion 3d formed to protrude from the tip end portion of the tool body and the second rotary tool 4 further includes a recessed portion 4d formed at the tip end portion thereof for receiving the tip end of the protruding portion 3d therein when two metal plates 1, 2 are to be welded. The first and second rotary tools are arranged in opposed relationship in the front and back surface sides of a joint portion J of the metal plates, moved to approach to each other to insert the tip end of the protruding portion of the first rotary tool into the recessed portion of the second rotary tool while pressing shoulder surfaces 3b, 4b of the shoulder portions of the first and second rotary tools against the front and back surfaces of the joint portion. In this state, the first and second rotary tools are moved along the joint portion to frictionally stir the entire region in the thickness direction of the joint portion.

FIG. 1

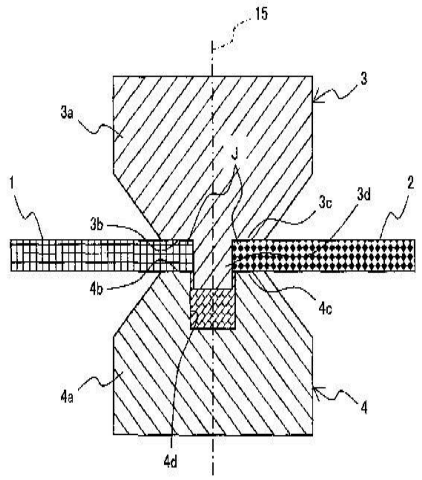

No. of Pages : 112 No. of Claims : 12

(12) PATENT APPLICATION PUBLICATION
(19) INDIA
(22) Date of filing of Application :17/04/2012
(21) Application No.3324/DELNP/2012 A
(43) Publication Date : 23/10/2015

(54) Title of the invention : RECOVERY OF BUTANOL FROM A MIXTURE OF BUTANOL, WATER, AND AN ORGANIC EXTRACTANT

(51) International classification :C07C 29/86
(31) Priority Document No :61/263,502
(32) Priority Date :23/11/2009
(33) Name of priority country :U.S.A.
(86) International Application No :PCT/US2010/057600
Filing Date :22/11/2010
(87) International Publication No :WO 2011/063325
(61) Patent of Addition to Application Number :NA
Filing Date :NA
(62) Divisional to Application Number :NA
Filing Date :NA

(71)**Name of Applicant :**
1)BUTAMAX,, ADVANCED BIOFUELS LLC
Address of Applicant :200 POWDER MILL ROAD, WILMINGTON, DE 19803, U.S.A U.S.A.
(72)**Name of Inventor :**
1)GRADY, MICHAEL, CHARLES
2)PARTEN, WILLIAM, D.
3)VRANA, BRUCE
4)XU, YIHUI, TOM

(57) Abstract :
A process for recovering butanol from a mixture comprising a water-immiscible organic extractant, water, butanol, and optionally a non-condensable gas, is provided. The butanol is selected from 1-butanol, 2-butanol, isobutanol, and mixtures thereof. The extractant comprises at least one solvent selected from the group consisting of C7 to C22 fatty alcohols, C7 to C22 fatty acids, esters of C7 to C22 fatty acids, C7 to C22 fatty aldehydes, and mixtures thereof.

FIG. 1

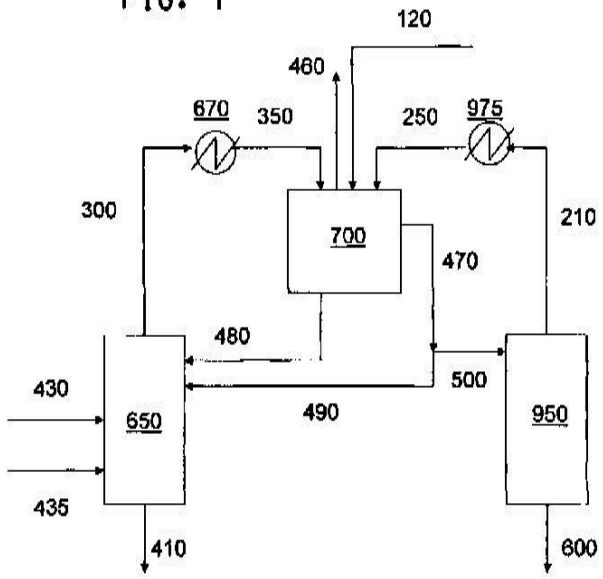

No. of Pages : 50 No. of Claims : 22

(12) PATENT APPLICATION PUBLICATION
(19) INDIA
(22) Date of filing of Application :17/04/2012
(21) Application No.3325/DELNP/2012 A
(43) Publication Date : 23/10/2015

(54) Title of the invention : METHOD AND ARRANGEMENT FOR TUNING POLARIZATIONS FOR ORTHOGONALLY POLARIZED ANTENNAS

(51) International classification :H04B 7/10
(31) Priority Document No :NA
(32) Priority Date :NA
(33) Name of priority country :NA
(86) International Application No :PCT/SE2009/051275
Filing Date :09/11/2009
(87) International Publication No :WO 2011/056111
(61) Patent of Addition to Application Number :NA
Filing Date :NA
(62) Divisional to Application Number :NA
Filing Date :NA

(71)**Name of Applicant :**
1)TELEFONAKTIEBOLAGET LM ERICSSON (PUBL)
Address of Applicant :SE-164 83 STOCKHOLM (SE) Sweden
(72)**Name of Inventor :**
1)ASPLUND, HENRIK
2)HAGERMAN, BO
3)SIMONSSON, ARNE

(57) Abstract :
The present invention relates to a method and a transceiver device in a wireless communication system that enable tuning of the polarization generated by a cross- polarized transmitting antenna configuration of an eNB. This is addressed by a solution where the polarization is adjusted (320) based on a quality indicator e.g. received (310) from one or more UEs. The quality indicator indicates the quality of the communication between the eNB and the UEs, and is used to determine if the adjustment of the antenna configuration is improving the quality of the communication or not. The tuning is thus an iteration (330) of the steps of adjusting (320) the polarization and of receiving (310) the quality indicator, and when the quality indicator has reached a pre-determined value, the iteration is stopped.

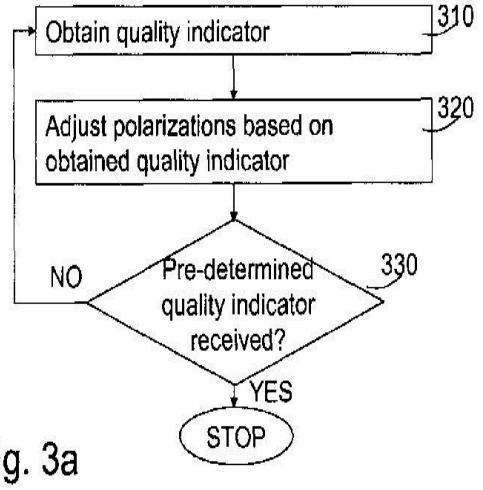

Fig. 3a

No. of Pages : 23 No. of Claims : 22

(12) PATENT APPLICATION PUBLICATION
(19) INDIA
(22) Date of filing of Application :16/04/2012
(21) Application No.3238/DELNP/2012 A
(43) Publication Date : 23/10/2015

(54) Title of the invention : THERMOSETTING COMPOSITION

(51) International classification :C08G 73/02
(31) Priority Document No :09173583.7
(32) Priority Date :21/10/2009
(33) Name of priority country :EUROPEAN UNION
(86) International Application No :PCT/EP2010/064057
Filing Date :23/09/2010
(87) International Publication No :WO 2011/047929
(61) Patent of Addition to Application Number :NA
Filing Date :NA
(62) Divisional to Application Number :NA
Filing Date :NA

(71)**Name of Applicant :**
1)HUNTSMAN ADVANCED MATERIALS (SWITZERLAND) GMBH
Address of Applicant :KLYBECKSTRASSE 200, 4057 BASEL, SWITZERLAND Switzerland
(72)**Name of Inventor :**
1)FRANS SETIABUDI

(57) Abstract :
A thermosetting composition comprising (a) at least one phosphorous-free dihydrobenzoxazine component; (b) at least a quaternary ammonium salt and (c) optionally a compound comprising at least an epoxy group is disclosed. Cured products made from these compositions have valuable chemical, physical and mechanical properties.

No. of Pages : 29 No. of Claims : 15

(12) PATENT APPLICATION PUBLICATION
(19) INDIA
(22) Date of filing of Application :16/04/2012
(21) Application No.3239/DELNP/2012 A
(43) Publication Date : 23/10/2015

(54) Title of the invention : PALM ACTIVATED DRUG DELIVERY DEVICE

(51) International classification :A61M 5/32
(31) Priority Document No :61/252,378
(32) Priority Date :16/10/2009
(33) Name of priority country :U.S.A.
(86) International Application No :PCT/US2010/052894
Filing Date :15/10/2010
(87) International Publication No :WO 2011/047298
(61) Patent of Addition to Application Number :NA
Filing Date :NA
(62) Divisional to Application Number :NA
Filing Date :NA

(71)**Name of Applicant :**
1)JANSSEN BIOTECH, INC.
Address of Applicant :800/850 RIDGEVIEW DRIVE, PLORSHAM, PA 19044, U.S.A. U.S.A.
(72)**Name of Inventor :**
1)LORIN P. OLSON
2)PETER KRULEVITCH
3)JAMES GLENCROSS
4)JINGLI WANG
5)NICHOLAS FOLEY
6)MINGQI ZHAO

(57) Abstract :
Disclosed is a device for the parenteral delivery of a medication, such as a drug. The device includes upper and lower housings in which the upper housing is configured to move relative to the lower housing as a result of application of an external force to permit the user of the device to control the rate at which the drug is administered.

No. of Pages : 50 No. of Claims : 10

(12) PATENT APPLICATION PUBLICATION
(21) Application No.3332/DELNP/2012 A
(19) INDIA
(22) Date of filing of Application :17/04/2012
(43) Publication Date : 23/10/2015

(54) Title of the invention : INTRAORAL APPLIANCE FOR SOUND TRANSMISSION VIA BONE CONDUCTION

(51) International classification :A61B
(31) Priority Document No :61/248,262
(32) Priority Date :02/10/2009
(33) Name of priority country :U.S.A.
(86) International Application No :PCT/US2010/048217
Filing Date :09/09/2010
(87) International Publication No :WO 2011/041078
(61) Patent of Addition to Application Number :NA
Filing Date :NA
(62) Divisional to Application Number :NA
Filing Date :NA

(71)**Name of Applicant :**
1)SONITUS MEDICAL INC.
Address of Applicant :1825 S. Grant Street Suite 350 San Mateo CA 94402 United States of America. U.S.A.
(72)**Name of Inventor :**
1)Amir A. ABOLFATHI

(57) Abstract :
An intra-oral appliance for transmitting sound via bone conduction and optimized for comfort safety speech intelligibility eating and drinking and extended wear by the user including an actuator to provide bone conduction sound transmission; a transceiver coupled to the actuator to cause the actuator to generate sound; and a first chamber containing the actuator and the transceiver said first chamber adapted to be coupled to one or more teeth of the user.

No. of Pages : 34 No. of Claims : 40

(12) PATENT APPLICATION PUBLICATION
(19) INDIA
(22) Date of filing of Application :21/04/2015
(21) Application No.3332/DELNP/2015 A
(43) Publication Date : 23/10/2015

(54) Title of the invention : DISPOSABLE PROPHYLAXIS ANGLE WITH IMPROVED GEAR RETAINER

(51) International classification :A61C17/16,A61C17/22,A61C17/26
(31) Priority Document No :13/682862
(32) Priority Date :21/11/2012
(33) Name of priority country :U.S.A.
(86) International Application No :PCT/US2013/067015
Filing Date :28/10/2013
(87) International Publication No :WO 2014/081532
(61) Patent of Addition to Application Number :NA
Filing Date :NA
(62) Divisional to Application Number :NA
Filing Date :NA

(71)**Name of Applicant :**
1)YOUNG DENTAL MANUFACTURING I, LLC
Address of Applicant :13705 Shoreline Court E, Earth City ,Missouri 63045- 1235 U.S.A.
(72)**Name of Inventor :**
1)MADRY, Roger
2)TRIPP, Steve
3)RICHARDSON ,Tom
4)CURRY ,Jim

(57) Abstract :
Disclosed are embodiments of a dental prophylaxis angle. One dental prophylaxis angle includes a body having a neck that defines a first axial bore and a head that defines a second axial bore, the first and second axial bores communicating at an intersection and being angularly- offset from each other , a drive gear rotatably mounted in the first axial bore and having a drive gear head and a locking flange axially- offset from the drive gear head , an annular locking groove being defined between the drive gear head and the locking flange , a driven gear rotatably mounted in the second axial bore and operatively coupled to the drive gear and a gear retainer having an annular body configured to extend about an outer surface of the head , a heel extending from the annular body , an arm extending from the heel , and a wedge extending from the arm.

No. of Pages : 28 No. of Claims : 20

(12) PATENT APPLICATION PUBLICATION
(19) INDIA
(22) Date of filing of Application :17/04/2012
(21) Application No.3333/DELNP/2012 A
(43) Publication Date : 23/10/2015

(54) Title of the invention : A FITTING ARRANGEMENT FOR A DOOR HANDLE

(51) International classification :B41M
(31) Priority Document No :0901226-1
(32) Priority Date :23/09/2009
(33) Name of priority country :Sweden
(86) International Application No :PCT/SE2010/000226
Filing Date :21/09/2010
(87) International Publication No :WO 2011/037510
(61) Patent of Addition to Application Number :NA
Filing Date :NA
(62) Divisional to Application Number :NA
Filing Date :NA

(71)**Name of Applicant :**
1)Urfic-Industria De Ferragens S.A.
Address of Applicant :Rua Eduardo Antonio Coimbra 319 Tondela 3460-591 Portugal. Portugal
2)Beslagshuset AB
(72)**Name of Inventor :**
1)Peter RUDHAGER
2)Peter NYSTR–M

(57) Abstract :
A fitting arrangement for a handle (2, 3) in a door (1) of predetermined thickness, the door (1) having an interior lock chamber (6). A rod (4) interconnects two handles (2, 3) with the lock chamber (6). Between each handle (2, 3) and the door (1), there is a washer or cover plate (16) through which the rod (4) extends. The rod (4) is, depending on the predetermined thickness, insertable to a greater or lesser distance in an opening (8) in the one handle (2, 3) and fixable there via an adjustable coupling (9, 10). According to the invention, the washer or cover plate (16) is connected to an adjustment device (20) for adaptation of the position of the washer or cover plate (16) to the predetermined thickness. The adjustment device (20) has a coupling (24) with a magnet for fixing of the adjustment device on the lock chamber (6). The adjustment device (20) has an outer part (18) intended for securing on the washer or cover plate and an inner part (19) with the magnet, the outer and the inner parts being adjustably connected to one another by the intermediary of a thread union.

No. of Pages : 18 No. of Claims : 9

(12) PATENT APPLICATION PUBLICATION
(21) Application No.3247/DELNP/2012 A
(19) INDIA
(22) Date of filing of Application :16/04/2012
(43) Publication Date : 23/10/2015

(54) Title of the invention : 'ROTOR, IN PARTICULAR FOR A CAMSHAFT ADJUSTER, METHOD FOR PRODUCING A ROTOR AND DEVICE FOR ADJUSTING THE ANGLE OF ROTATION OF A CAMSHAFT RELATIVE TO A CRANKSHAFT OF AN ENGINE

(51) International classification :F01L 1/344
(31) Priority Document No :10 2009 053600.0
(32) Priority Date :17/11/2009
(33) Name of priority country :Germany
(86) International Application No :PCT/EP2010/067167
Filing Date :10/11/2010
(87) International Publication No :WO 2011/061100
(61) Patent of Addition to Application Number :NA
Filing Date :NA
(62) Divisional to Application Number :NA
Filing Date :NA

(71)**Name of Applicant :**
1)SCHAEFFLER TECHNOLOGIES AG & CO. KG
Address of Applicant :INDUSTRIESTR. 1-3, 91074 HERZOGENAURACH, GERMANY Germany
(72)**Name of Inventor :**
1)MARIO ARNOLD

(57) Abstract :
A rotor (10), in particular for a camshaft adjuster, comprises a rotor base body (8) that comprises a hub part having a central oil inlet (14). In addition, at least one vane (18) arranged in a radial manner on the hub part (12) and also oil channels (16) that extend through the hub part (12) on both sides of each vane (18) and are connected to the central oil inlet (14) in such a manner as to allow the flow of oil are provided in the hub part (12). The process of manufacturing the rotor base body (8) is considerably simplified as the rotor base body (8) is divided along a dividing plane (T), so that it comprises two base body parts (6).

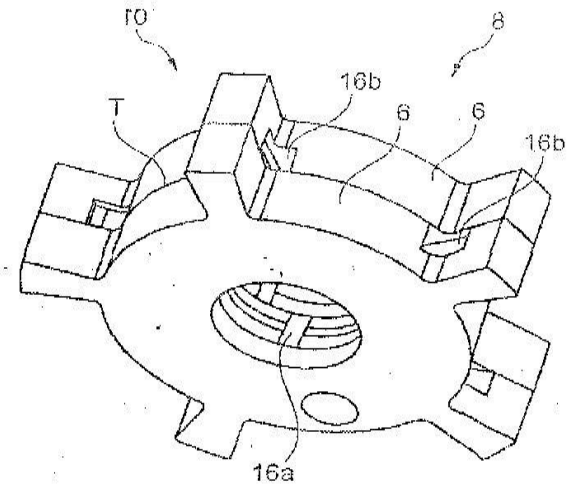

Fig. 4

No. of Pages : 15 No. of Claims : 15

(12) PATENT APPLICATION PUBLICATION
(19) INDIA
(22) Date of filing of Application :16/04/2012
(21) Application No.3248/DELNP/2012 A
(43) Publication Date : 23/10/2015

(54) Title of the invention : METHOD OF PRODUCTION OF WELDED JOINT

(51) International classification :B23K
(31) Priority Document No :NA
(32) Priority Date :NA
(33) Name of priority country :NA
(86) International Application No :PCT/JP2011/054664
Filing Date :23/02/2011
(87) International Publication No :NA
(61) Patent of Addition to Application Number :NA
Filing Date :NA
(62) Divisional to Application Number :NA
Filing Date :NA

(71)**Name of Applicant :**
1)NIPPON STEEL & SUMITOMO METAL CORPORATION
Address of Applicant :6-1, MARUNOUCHI 2-CHOME, CHIYODA-KU, TOKYO 100-8071, JAPAN Japan
(72)**Name of Inventor :**
1)TADASHI KASUYA
2)RYUICHI SHIMURA
3)MANABU MIZUMOTO

(57) Abstract :
A method of production of a welded joint which enables improvement of the fatigue strength in the case where measures for improvement of the fatigue strength cannot be applied due to the presence of structurally sealed regions is provided. The method is provided with a first weld step which performs welding by forming an inside weld toe or root part by using a weld, metal with a transformation start temperature of 175°C to 400°C in range, at least parts of the weld metal forming the inside weld toe or root part which was formed at the first weld step becoming unmelted parts, and a second weld step which performs welding for building up the weld metal by a single pass by a weld heat input by which all of the unmelted parts are retransformed to austenite so as to introduce compressive residual stress to the inside weld toe or root part.

No. of Pages : 81 No. of Claims : 15

(12) PATENT APPLICATION PUBLICATION
(19) INDIA
(22) Date of filing of Application :16/04/2012
(21) Application No.3249/DELNP/2012 A
(43) Publication Date : 23/10/2015

(54) Title of the invention : A TERMINAL FOR COMMUNICATING WITH A COMMUNICATION SATELLITE

(51) International classification :H04B 7/185
(31) Priority Document No :09275101.5
(32) Priority Date :16/10/2009
(33) Name of priority country :EUROPEAN UNION
(86) International Application No :PCT/EP2010/065141
Filing Date :08/10/2010
(87) International Publication No :WO 2011/045251
(61) Patent of Addition to Application Number :NA
Filing Date :NA
(62) Divisional to Application Number :NA
Filing Date :NA

(71)**Name of Applicant :**
1)ASTRIUM LIMITED
Address of Applicant :GUNNELS WOOD ROAD, STEVENAGE, HERTFORDSHIRE SG1 2AS, UNITED KINGDOM U.K.
(72)**Name of Inventor :**
1)DONALD LESTER
2)NIALL ANDREW MACMANUS

(57) Abstract :
A terminal for communicating with a communication satellite A terminal comprising: a first transceiver for communicating with at least one device in a short range network; a second transceiver for communicating with a geostationary communication satellite in a network deploying a plurality of forward channels for the communication satellite to transmit data to said terminal and a plurality of return channels for the terminal to transmit data to said communication satellite, the second transceiver being configured to transmit data from said at least one device in one of said plurality of return channels. The at least one device may comprise a plurality of utility meters and other sensors. A large system comprising a plurality of the terminals, a communication satellite and a data authority may provide a system for collecting utility meter readings across a geographical region.

No. of Pages : 45 No. of Claims : 34

(12) PATENT APPLICATION PUBLICATION
(19) INDIA
(22) Date of filing of Application :18/04/2012
(21) Application No.3341/DELNP/2012 A
(43) Publication Date : 23/10/2015

(54) Title of the invention : SURGICAL STAPLER COMPRISING A STAPLE POCKET

(51) International classification :A61B 17/072
(31) Priority Document No :61/250,377
(32) Priority Date :09/10/2009
(33) Name of priority country :U.S.A.
(86) International Application No :PCT/US2010/051288
Filing Date :04/10/2010
(87) International Publication No :WO 2011/044026
(61) Patent of Addition to Application Number :NA
Filing Date :NA
(62) Divisional to Application Number :NA
Filing Date :NA

(71)**Name of Applicant :**
1)ETHICON ENDO-SURGERY, INC
Address of Applicant :4545, CREEK-ROAD, CINCINNATI, OH 45242, USA U.S.A.
(72)**Name of Inventor :**
1)JAMES J. BEDI
2)ADAM R. DUNKI-JACOBS

(57) Abstract :
A surgical stapler can comprise an anvil comprising a staple pocket formed in a tissue contacting surface. The staple pocket can comprise a longitudinal axis, a first forming cup, and a second forming cup. The first forming cup can comprise a first interior sidewall comprising a first vertical portion which is substantially perpendicular to the tissue contacting surface. The second forming cup can comprise a second interior sidewall comprising a second vertical portion which is substantially perpendicular to the tissue contacting surface. The first vertical portion and the second vertical portion can extend through the longitudinal axis, wherein the first interior sidewall and the second interior sidewall can comprise a trap for deforming a first staple leg of a staple to a first side of the longitudinal axis and for deforming a second staple leg of the staple to a second side of the longitudinal axis.

No. of Pages : 134 No. of Claims : 10

(12) PATENT APPLICATION PUBLICATION
(19) INDIA
(22) Date of filing of Application :16/04/2012
(21) Application No.3242/DELNP/2012 A
(43) Publication Date : 23/10/2015

(54) Title of the invention : ELECTRONIC TRANSACTION SECURITY SYSTEMS METHOD

(51) International classification :H04L 9/00
(31) Priority Document No :61/248,722
(32) Priority Date :05/10/2009
(33) Name of priority country :U.S.A.
(86) International Application No :PCT/US2010/051524
Filing Date :05/10/2010
(87) International Publication No :WO 2011/044161
(61) Patent of Addition to Application Number :NA
Filing Date :NA
(62) Divisional to Application Number :NA
Filing Date :NA

(71)**Name of Applicant :**
1)MIRI SYSTEMS, LLC
Address of Applicant :7804 FAIRVIEW ROAD, SUITE 310, CHARLOTTE, NORTH CAROLINA 28226, UNITED STATES OF AMRERICA U.S.A.
(72)**Name of Inventor :**
1)LUDWIK F. ZON
2)RONALD W. SANDSTROM

(57) Abstract :
A system and method for generating a limited use login credential associated with an account maintained by an institution, where the credential facilitates secure access to the account

No. of Pages : 49 No. of Claims : 6

(12) PATENT APPLICATION PUBLICATION
(19) INDIA
(22) Date of filing of Application :17/04/2012
(21) Application No.3335/DELNP/2012 A
(43) Publication Date : 23/10/2015

(54) Title of the invention : PNEUMATIC TRANSPORT SYSTEM

(51) International classification :B66C
(31) Priority Document No :PA 2009 70138
(32) Priority Date :02/10/2009
(33) Name of priority country :Denmark
(86) International Application No :PCT/DK2010/050247
Filing Date :30/09/2010
(87) International Publication No :WO 2011/038729
(61) Patent of Addition to Application Number :NA
Filing Date :NA
(62) Divisional to Application Number :NA
Filing Date :NA

(71)**Name of Applicant :**
1)BLAK & S˜RENSEN APS
Address of Applicant :Brogesvej 18 DK-7441 Bording Denmark. Denmark
(72)**Name of Inventor :**
1)Peter M¸ller S˜RENSEN
2)Daniel BLAK

(57) Abstract :
The present invention concerns a conveying system including at least one tube connection at least one dispatch station and at least one receiver station where items are conveyed by an airflow in the direction of the airflow in the pipe connection from a dispatch station to a receiver station. The new feature of a conveying system according to the invention is that the tube connection has an inner cross-sectional area preferably a circular cross-sectional area with a size greater than the largest cross-sectional area of an item and which is preferably provided with at least twice the cross-sectional area compared with the largest cross-sectional area of an item. Hereby is achieved the advantage that several items may be conveyed in the same tube connection at the same time where these items are sent individually and successively corresponding to one item being sent immediately after another.

No. of Pages : 16 No. of Claims : 10

(12) PATENT APPLICATION PUBLICATION
(21) Application No.3335/DELNP/2015 A
(19) INDIA
(22) Date of filing of Application :21/04/2015
(43) Publication Date : 23/10/2015

(54) Title of the invention : PROCESS FOR FORMING A LONG GAS TURBINE ENGINE BLADE HAVING A MAIN WALL WITH A THIN PORTION NEAR A TIP

(51) International classification :F01D5/14,F01D5/18
(31) Priority Document No :13/675345
(32) Priority Date :13/11/2012
(33) Name of priority country :U.S.A.
(86) International Application No :PCT/US2013/069671
Filing Date :12/11/2013
(87) International Publication No :WO 2014/078305
(61) Patent of Addition to Application Number :NA
Filing Date :NA
(62) Divisional to Application Number :NA
Filing Date :NA

(71)**Name of Applicant :**
1)SIEMENS ENERGY, INC.
Address of Applicant :4400 Alafaya Trail, Orlando ,Florida 32826 -2399 U.S.A.
(72)**Name of Inventor :**
1)CAMPBELL ,Christian X.
2)THOMAIDIS, Dimitrios

(57) Abstract :
A process is provided for forming an airfoil for a gas turbine engine involving: forming a casting of a gas turbine engine airfoil having a main wall and an interior cavity , the main wall having a wall thickness extending from an external surface of the outer wall to the interior cavity, an outer section of the main wall extending from a location between a base and a tip of the airfoil casting to the tip having a wall thickness greater than a final thickness. The process may further involve effecting movement, using a computer system , of a material removal apparatus and the casting relative to one another such that a layer of material is removed from the casting at one or more radial portions along the main wall of the casting

No. of Pages : 19 No. of Claims : 19

(12) PATENT APPLICATION PUBLICATION
(21) Application No.3336/DELNP/2012 A
(19) INDIA
(22) Date of filing of Application :18/04/2012
(43) Publication Date : 23/10/2015

(54) Title of the invention : METHOD FOR PRODUCING IMPLANTABLE MEDICAL BIOPROSTHESES HAVING REDUCED CALCIFICATION PROPERTIES

(51) International classification :G01N 33/80
(31) Priority Document No :0957229
(32) Priority Date :15/10/2009
(33) Name of priority country :France
(86) International Application No :PCT/FR2010/000683
Filing Date :13/10/2009
(87) International Publication No :WO 2011/051574
(61) Patent of Addition to Application Number :NA
Filing Date :NA
(62) Divisional to Application Number :NA
Filing Date :NA

(71)**Name of Applicant :**
1)SCHUSSLER, OLIVIER
Address of Applicant :8 BIS, RUE BERTHELOT F-92150 SURESNES (FR) France
(72)**Name of Inventor :**
1)SCHUSSLER, OLIVIER

(57) Abstract :
This invention relates to a method for obtaining an implantable medical bioprosthesis comprising substances from animal tissue, comprising a step during which a bioprosthesis is positively selected for its implantation in the body of said patient when (i) the phenotype in ABO/ABH system of said bioprosthesis is compatible with (ii) the phenotype in ABO/ABH system of said patient.

No. of Pages : 67 No. of Claims : 10

(12) PATENT APPLICATION PUBLICATION
(19) INDIA
(22) Date of filing of Application :21/04/2015
(21) Application No.3336/DELNP/2015 A
(43) Publication Date : 23/10/2015

(54) Title of the invention : LEAVE -ON COMPOSITIONS CONTAINING CELLULOSE MATERIALS

(51) International classification :A61K8/73,A61Q19/00,A61K8/02
(31) Priority Document No :13/673430
(32) Priority Date :09/11/2012
(33) Name of priority country :U.S.A.
(86) International Application No :PCT/US2013/068687
Filing Date :06/11/2013
(87) International Publication No :WO 2014/074578
(61) Patent of Addition to Application Number :NA
Filing Date :NA
(62) Divisional to Application Number :NA
Filing Date :NA

(71)**Name of Applicant :**
1)JOHNSON & JOHNSON CONSUMER COMPANIES INC.
Address of Applicant :199 Grandview Road, Skillman ,New Jersey 08558 U.S.A.
(72)**Name of Inventor :**
1)BONNER, Patricia
2)KAMINSKI ,Claudia
3)LIMA LORENZETTI ,Danielle
4)MAITRA ,Prithwiraj
5)SALLES MOSCARDI ,Juliana
6)WU ,Jeffrey M.

(57) Abstract :
The compositions and methods of this invention relate to a leave- on skin care composition containing hydrophobic , linear cellulose particles having an average length of from about 1 to about 500µm , a particle aspect ratio from about 2 to about 25 and an average thickness of from about 1 to about 500µm; and a cosmetically acceptable carrier.

No. of Pages : 41 No. of Claims : 17

(12) PATENT APPLICATION PUBLICATION
(19) INDIA
(22) Date of filing of Application :18/04/2012
(21) Application No.3337/DELNP/2012 A
(43) Publication Date : 23/10/2015

(54) Title of the invention : SPIRO-CONDENSED CYCLOHEXANE DERIVATIVES AS HSL INHIBITORS USEFUL FOR THE TREATMENT OF DIABETES

(51) International classification :A61K
(31) Priority Document No :09173178.6
(32) Priority Date :15/10/2009
(33) Name of priority country :EPO
(86) International Application No :PCT/EP2010/065232
Filing Date :12/10/2010
(87) International Publication No :NA
(61) Patent of Addition to Application Number :NA
Filing Date :NA
(62) Divisional to Application Number :NA
Filing Date :NA

(71)**Name of Applicant :**
1)F. HOFFMANN-LA ROCHE AG
Address of Applicant :GRENZACHERSTRASSE 124, CH-4070 BASEL, SWITZERLAND Switzerland
(72)**Name of Inventor :**
1)ACKERMANN, JEAN
2)BRUGGER, STEPHAN
3)CONTE, AURELIA
4)HUNZIKER, DANIEL
5)NEIDHART, WERNER
6)NETTEKOVEN, MATTHIAS
7)SCHULZ-GASCH, TANJA
8)WERTHEIMER, STANLEY

(57) Abstract :
Compounds of formula (I) as well as pharmaceutically acceptable salts thereof can be used in the form of pharmaceutical compositions, wherein R1 ,R2, R3 , Ca and Cb have the significance given in claim 1.

No. of Pages : 405 No. of Claims : 27

(12) PATENT APPLICATION PUBLICATION
(19) INDIA
(22) Date of filing of Application :16/04/2012

(21) Application No.3250/DELNP/2012 A
(43) Publication Date : 23/10/2015

(54) Title of the invention : GRAVITY-POWERED ELECTRICAL ENERGY GENERATORS

(51) International classification :F03G 3/00
(31) Priority Document No :0918002.7
(32) Priority Date :14/10/2009
(33) Name of priority country :U.K.
(86) International Application No :PCT/GB2010/051734
Filing Date :14/10/2010
(87) International Publication No :WO 2011/045606
(61) Patent of Addition to Application Number :NA
Filing Date :NA
(62) Divisional to Application Number :NA
Filing Date :NA

(71)**Name of Applicant :**
1)THEREFORE LIMITED
Address of Applicant :2 SCALA STREET, LONDON, GRATER LONDON W1T 2HN, UNITED KINGDOM U.K.
(72)**Name of Inventor :**
1)RIDDIFORD, MARTIN PHILIP

(57) Abstract :
Gravity powered electrical energy generators, particularly for producing lighting is disclosed. The apparatus has a support frame (1, 30) in which a series of gears and a gear-driven generator (20) are mounted. The power to drive the most upstream gear (2) is provided by a weight suspended from a point to one side of the axis of rotation of gear (2). The drive gear of the furthest downstream gear has no teeth so that the final contact between the drive gear and the shaft of the generator (20) is frictional. The gear ratio of the final downstream is at least 25. When used for lighting, the apparatus may include one or more high brightness LEDs (40) mounted on the housing (30). By suitable choice of gear ratios, the device may produce thirty minutes of illumination while allowing a 10 kilogram weight to fall through a distance of 1.8 metres.

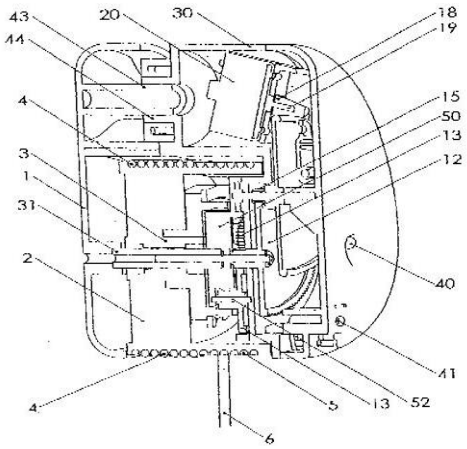

Fig 2

No. of Pages : 12 No. of Claims : 17

(12) PATENT APPLICATION PUBLICATION
(21) Application No.3251/DELNP/2012 A
(19) INDIA
(22) Date of filing of Application :16/04/2012
(43) Publication Date : 23/10/2015

(54) Title of the invention : SUBSTRATE FOR INTEGRATED CIRCUIT DEVICES INCLUDING MULTI-LAYER GLASS CORE AND METHODS OF MAKING THE SAME

(51) International classification :H01L 23/485
(31) Priority Document No :12/653,722
(32) Priority Date :17/12/2009
(33) Name of priority country :U.S.A.
(86) International Application No :PCT/US2010/054931
Filing Date :01/11/2010
(87) International Publication No :WO 2011/084216
(61) Patent of Addition to Application Number :NA
Filing Date :NA
(62) Divisional to Application Number :NA
Filing Date :NA

(71)**Name of Applicant :**
1)INTEL CORPORATION
Address of Applicant :2200 MISSION COLLEGE BOULEVARD, SANTA CLARA, CALIFORNIA 95052, UNITED STATES OF AMERICA U.S.A.
(72)**Name of Inventor :**
1)MA, QING
2)HU, CHUAN
3)MORROW, PATRICK

(57) Abstract :
Disclosed are embodiments of a substrate for an integrated circuit (IC) device. The substrate includes a core comprised of two or more discrete glass layers that have been bonded together. A separate bonding layer may be disposed between adjacent glass layers to couple these layers together. The substrate may also include build-up structures on opposing sides of the multi-layer glass core, or perhaps on one side of the core. Electrically conductive terminals may be formed on both sides of the substrate, and an IC die may be coupled with the terminals on one side of the substrate. The terminals on the opposing side may be coupled with a next-level component, such as a circuit board. One or more conductors extend through the multi-layer glass core, and one or more of the conductors may be electrically coupled with the build-up structures disposed over the core. Other embodiments are described and claimed.

No. of Pages : 54 No. of Claims : 20

(12) PATENT APPLICATION PUBLICATION
(19) INDIA
(22) Date of filing of Application :18/04/2012
(21) Application No.3345/DELNP/2012 A
(43) Publication Date : 23/10/2015

(54) Title of the invention : LOCKING SAFETY MECHANISM FOR SUSPENDED TRANSPORT APPARATUS

(51) International classification :A61G 7/14
(31) Priority Document No :12/567,959
(32) Priority Date :28/09/2009
(33) Name of priority country :U.S.A.
(86) International Application No :PCT/US2010/002524
Filing Date :16/09/2010
(87) International Publication No :WO 2011/037608
(61) Patent of Addition to Application Number :NA
Filing Date :NA
(62) Divisional to Application Number :NA
Filing Date :NA

(71)**Name of Applicant :**
1)KARL IMHOFF
Address of Applicant :26535 MUSKEGO DAM DRIVE, MUSKEGO, WISCONSIN 53150, UNITED STATES OF AMERICA U.S.A.
(72)**Name of Inventor :**
1)KARL IMHOFF

(57) Abstract :
A suspended patient-carrier/transport apparatus (10) of the type including an overhead rail (20) forming a horizontal track (21) terminating at a track-end (22), and a carrier device (12) supported by a carriage (30) having a plurality of aligned rollers (32) rideable along the track. The inventive suspended transport apparatus has a locking safety mechanism (14) including the carriage having a main carriage portion (34) and a forward carriage portion (36). A track-end detector (22) is at the forward carriage portion and movably secured with respect thereto such that the track-end detector moves downwardly when it runs beyond the track-end. A locking device (40) is operatively connected with respect to the track-end detector such that downward movement thereof causes the locking device to engage the rail thereby stopping the carriage on the track.

No. of Pages : 29 No. of Claims : 18

(12) PATENT APPLICATION PUBLICATION
(19) INDIA
(22) Date of filing of Application :18/04/2012
(21) Application No.3346/DELNP/2012 A
(43) Publication Date : 23/10/2015

(54) Title of the invention : CARBON NANOTUBE BASED FIELD EMISSION DEVICES AND METHODS

(51) International classification :H01J 1/304
(31) Priority Document No :61/243,612
(32) Priority Date :18/09/2009
(33) Name of priority country :U.S.A.
(86) International Application No :PCT/US2010/049499
Filing Date :20/09/2010
(87) International Publication No :WO 2011/035246
(61) Patent of Addition to Application Number :NA
Filing Date :NA
(62) Divisional to Application Number :NA
Filing Date :NA

(71)**Name of Applicant :**
1)THE UNIVERSITY OF AKRON
Address of Applicant :170 UNIVERSITY CIRCLE, AKRON, OHIO 44325, UNITED STATES OF AMERICA U.S.A.
(72)**Name of Inventor :**
1)ALI DHINOJWALA
2)SUNNY SETHI

(57) Abstract :
A method of fabricating a cathodic portion of a field emission display includes the steps of producing an array of substantially parallel carbon nanotubes attached at one end to a substantially planar substrate. Then, embedding the nanotubes in a polymer matrix that extends to a plane of attachment of the nanotubes to the planar substrate, wherein the polymer matrix allows an end of the nanotubes distal from the ends attached to the planar substrate, uncovered by the polymer matrix in order to allow electrical contact with each other and with an attached conductor. Next, detaching the array from the planar substrate, thus producing a surface having the formerly attached ends of the nanotubes substantially in a plane, and then attaching the conductor to the array of nanotube ends, uncovered by the polymer matrix and distal to the plane.

No. of Pages : 28 No. of Claims : 6

(12) PATENT APPLICATION PUBLICATION
(21) Application No.3244/DELNP/2012 A
(19) INDIA
(22) Date of filing of Application :16/04/2012
(43) Publication Date : 23/10/2015

(54) Title of the invention : POWER SUPPLY DEVICE, POWER RECEIVING DEVICE, AND POWER SUPPLY METHOD

(51) International classification :G06F 1/26
(31) Priority Document No :2009-244424
(32) Priority Date :23/10/2009
(33) Name of priority country :Japan
(86) International Application No :PCT/JP2010/006089
Filing Date :13/10/2010
(87) International Publication No :WO 2011/048777
(61) Patent of Addition to Application Number :NA
Filing Date :NA
(62) Divisional to Application Number :NA
Filing Date :NA

(71)**Name of Applicant :**
1)SONY CORPORATION
Address of Applicant :1-7-1 KONAN, MINATO-KU, TOKYO 108-0075, JAPAN Japan
(72)**Name of Inventor :**
1)JUNICHI REKIMOTO
2)SHIGERU TAJIMA

(57) Abstract :
A power sever, client and method cooperate to selectably supply power from a power server to a client in a format that is acceptable to the client. The client device is able to distinguish the power server from other power servers based on an identification of the power server transmitted to the client device. The client device is then able to specify, or select, from the specific power server the format of the energy to be conveyed to the client device for ultimate consumption by the client device. The conveyance of energy is provided over conductors or wirelessly.

No. of Pages : 40 No. of Claims : 20

(12) PATENT APPLICATION PUBLICATION
(19) INDIA
(22) Date of filing of Application :16/04/2012
(21) Application No.3245/DELNP/2012 A
(43) Publication Date : 23/10/2015

(54) Title of the invention : THIN FILM PROCESSING APPARATUSES FOR ADJUSTABLE VOLUME ACCOMMODATION

(51) International classification :G01N 35/02
(31) Priority Document No :61/261,267
(32) Priority Date :13/11/2009
(33) Name of priority country :U.S.A.
(86) International Application No :PCT/US2010/056752
Filing Date :15/11/2010
(87) International Publication No :WO 2011/060387
(61) Patent of Addition to Application Number :NA
Filing Date :NA
(62) Divisional to Application Number :NA
Filing Date :NA

(71)**Name of Applicant :**
1)VENTANA MEDICAL SYSTEMS, INC.
Address of Applicant :1910 EAST INNOVATION PARK DRIVE, TUCSON, ARIZONA 85755, UNITED STATES OF AMERICA U.S.A.
(72)**Name of Inventor :**
1)BRIAN HOWARD KRAM
2)KEVIN DAVID MARSHALL
3)CHRISTINE TSE
4)TIMOTHY JAMES KELLER
5)AUSTIN MICHEIL ASHBY

(57) Abstract :
An apparatus can be used to apply and remove fluid substances for processing biological samples. The fluid substances can be delivered between a first substrate and a second substrate. One substrate carries a specimen. A layer of the fluid substance is retained in a gap defined by the first and second substrates. One substrate is moved with respect to the second substrate to disperse the fluid substance in the gap.

No. of Pages : 107 No. of Claims : 33

(12) PATENT APPLICATION PUBLICATION
(21) Application No.3339/DELNP/2012 A
(19) INDIA
(22) Date of filing of Application :18/04/2012
(43) Publication Date : 23/10/2015

(54) Title of the invention : BATCHES OF CROSS-LINKING AGENTS, CONTAINING MARKING SUBSTANCES, NOVEL CROSS-LINKABLE RUBBER MIXTURES, METHOD FOR THE PRODUCTION THEREOF, AND USE OF SAME

(51) International classification :B29C 55/00
(31) Priority Document No :09173921.9
(32) Priority Date :23/10/2009
(33) Name of priority country :EUROPEAN UNION
(86) International Application No :PCT/EP2010/065774
Filing Date :20/10/2010
(87) International Publication No :WO 2011/048129
(61) Patent of Addition to Application Number :NA
Filing Date :NA
(62) Divisional to Application Number :NA
Filing Date :NA

(71)**Name of Applicant :**
1)RHEIN CHEMIE RHEINAU GMBH
Address of Applicant :DUSSELDORFER STRASSE 23-27, 68219 MANNHEIM, GERMANY Germany
(72)**Name of Inventor :**
1)ANDREAS SCHRODER
2)MARTIN SAWE
3)VINCENZA MEENENGA

(57) Abstract :
A crosslinking agent masterbatch comprising at least one marker substance of density greater than 2 g/cm3 and at least one crosslinking agent selected from the group of sulfur, sulfur donors, peroxides, resorcinol, aldehyde-amine condensates, bisphenols, quinone dioximes, xanthogenate, carbamates, triazines, thiazoles, dithiocarbamates, thiurams, thioureas, mercapto accelerators, sulfonamides, thiophosphate accelerators, dithiophosphate accelerators, and/or guanidine.

No. of Pages : 26 No. of Claims : 10

(12) PATENT APPLICATION PUBLICATION
(21) Application No.3340/DELNP/2012 A
(19) INDIA
(22) Date of filing of Application :18/04/2012
(43) Publication Date : 23/10/2015

(54) Title of the invention : LEAN AUSTENITIC STAINLESS STEEL

(51) International classification :C22C 38/44
(31) Priority Document No :12/610,577
(32) Priority Date :02/11/2009
(33) Name of priority country :U.S.A.
(86) International Application No :PCT/US2010/052578
Filing Date :14/10/2010
(87) International Publication No :WO 2011/053460
(61) Patent of Addition to Application Number :NA
Filing Date :NA
(62) Divisional to Application Number :NA
Filing Date :NA

(71)**Name of Applicant :**
1)ATI PROPERTIES, INC.
Address of Applicant :1600 N.E. OLD SALEM ROAD, ALBANY, OR 97321, UNITED STATES OF AMERICA U.S.A.
(72)**Name of Inventor :**
1)DAVID S. BERGSTROM
2)JAMES M. RAKOWSKI

(57) Abstract :
An austenitic stainless steel composition including relatively low Ni and Mo levels, and exhibiting corrosion resistance, resistance to elevated temperature deformation, and formability properties comparable to certain alloys including higher Ni and Mo levels. Embodiments of the austenitic stainless steel include, in weight percentages, up to 0.20 C, 2.0-9.0 Mn, up to 2.0 Si, 15.0-23.0 Cr, 1.0-9.5 Ni, up to 3.0 Mo, up to 3.0 Cu, 0.05-0.35 N, (7.5(%C)) < (%Nb + %Ti + %V + %Ta + %Zr) < 1.5, Fe, and incidental impurities.

No. of Pages : 24 No. of Claims : 36

(12) PATENT APPLICATION PUBLICATION
(19) INDIA
(22) Date of filing of Application :21/04/2015
(21) Application No.3340/DELNP/2015 A
(43) Publication Date : 23/10/2015

(54) Title of the invention : EXTERNAL COOLING FLUID INJECTION SYSTEM IN A GAS TURBINE ENGINE

(51) International classification :F01D5/08,F01D21/00,F01D25/12
(31) Priority Document No :13/670788
(32) Priority Date :07/11/2012
(33) Name of priority country :U.S.A.
(86) International Application No :PCT/US2013/067950
Filing Date :01/11/2013
(87) International Publication No :WO 2014/074396
(61) Patent of Addition to Application Number :NA
Filing Date :NA
(62) Divisional to Application Number :NA
Filing Date :NA

(71)**Name of Applicant :**
1)SIEMENS AKTIENGESELLSCHAFT
Address of Applicant :Wittelsbacherplatz 2, 80333 Munich Germany
(72)**Name of Inventor :**
1)THAM, Kok -Mun
2)LEE ,Ching -Pang
3)LAURELLO, Vincent P.
4)CHEHAB ,Abdullatif M.
5)KEMP ,David A.
6)FUSSNER ,John A.
7)YIN ,Yan
8)SULTANIAN ,Bijay K.
9)CAI ,Weidong

(57) Abstract :
A cooling fluid air injection system (40) for use in a gas turbine engine (10) includes at an external cooling fluid source (42) , at least one rotor cooling pipe (46), which is used to inject cooling fluid from the source into a rotor chamber (Rc) , a piping system (44) that provides fluid communication between the source and the rotor cooling pipe(s), a blower system (50) for conveying the cooling fluid through the piping system and the rotor cooling pipe(s) into the rotor chamber , and a valve system (48). The valve system is closed during full load engine operation to prevent cooling fluid from the source from passing through the piping system , and open during less than full load engine operation to allow cooling fluid from the source to pass through the piping system.

No. of Pages : 20 No. of Claims : 20

(12) PATENT APPLICATION PUBLICATION
(21) Application No.3341/DELNP/2015 A
(19) INDIA
(22) Date of filing of Application :21/04/2015
(43) Publication Date : 23/10/2015

(54) Title of the invention : PROCESS FOR PRODUCING MONOSACCHCARIDES

(51) International classification :C12P19/18,C12N15/70
(31) Priority Document No :12 190 801.6
(32) Priority Date :31/10/2012
(33) Name of priority country :EPO
(86) International Application No :PCT/EP2013/068579
Filing Date :09/09/2013
(87) International Publication No :WO 2014/067696
(61) Patent of Addition to Application Number :NA
Filing Date :NA
(62) Divisional to Application Number :NA
Filing Date :NA

(71)**Name of Applicant :**
1)JENNEWEIN BIOTECHNOLOGIE GMBH
Address of Applicant :Maarweg 32, 53619 Rheinbreitbach Germany
(72)**Name of Inventor :**
1)JENNEWEIN, Stefan
2)PARSCHAT ,Katja

(57) Abstract :
The present invention relates to a process for producing a monosaccharide using a microorganism. The microorganism possesses a glycosyltransferase and a glycosidase which work together to synthesise a desired monosaccharide in free form by using an endogenous provided nucleotide activated monosaccharide , glycosylate a suitable acceptor substrate and release the desired monosaccharide by a hydrolysis reaction. The required acceptor substrate for the reaction is recycled and only needed in catalytic amounts. The monosaccharide is produced in free from and is retrieved from the supernatant of the cultivated microorganism.

No. of Pages : 39 No. of Claims : 20

(12) PATENT APPLICATION PUBLICATION
(19) INDIA
(22) Date of filing of Application :18/04/2012
(21) Application No.3342/DELNP/2012 A
(43) Publication Date : 23/10/2015

(54) Title of the invention : SPINDLE APPARATUS FOR RECEIVING AND DRIVING A TOOL HOLDER

(51) International classification :B23C 5/26
(31) Priority Document No :61/283,488
(32) Priority Date :14/12/2009
(33) Name of priority country :U.S.A.
(86) International Application No :PCT/US2010/055891
Filing Date :09/11/2010
(87) International Publication No :WO 2011/068637
(61) Patent of Addition to Application Number :NA
Filing Date :NA
(62) Divisional to Application Number :NA
Filing Date :NA

(71)**Name of Applicant :**
1)PRECISION DRIVE SYSTEMS, LLC
Address of Applicant :4367 DALLAS CHERRYVILLE HIGHWAY, BESSEMER CITY, NC 28016, USA U.S.A.
(72)**Name of Inventor :**
1)TIMOTHY ANDREW FRY
2)AXEL BEGEMANN
3)MALTE SCHNEPEL
4)JAMES ALLEN MCKINNEY
5)DOUGLAS ALAN GHOLSON

(57) Abstract :
A spindle apparatus for receiving and driving a tool holder, comprises a drive, a shaft coupled to the drive with a forward end of the shaft having a receptor for affixation of a tool holder, and a clamping device supported at the forward end of the shaft for integral driven rotation therewith. The clamping device has a clamping element disposed within the receptor and selectively actuable between an active position for retaining the tool holder and an inactive position for inserting and releasing the tool holder. An actuator is operatively connected with the clamping device for controlling movement of the clamping element between the active and inactive positions. The actuator is disposed adjacent the forward end of the shaft in surrounding relation thereto, which facilitates a particularly compact, efficient and reliable design.

No. of Pages : 41 No. of Claims : 9

(12) PATENT APPLICATION PUBLICATION
(19) INDIA
(22) Date of filing of Application :21/04/2015
(21) Application No.3342/DELNP/2015 A
(43) Publication Date : 23/10/2015

(54) Title of the invention : ORAL CARE DISPENSER

(51) International classification	:B65D35/22,B65D35/24,A46B15/00
(31) Priority Document No	:NA
(32) Priority Date	:NA
(33) Name of priority country	:NA
(86) International Application No	:PCT/US2012/067670
Filing Date	:04/12/2012
(87) International Publication No	:WO 2014/088548
(61) Patent of Addition to Application Number	:NA
Filing Date	:NA
(62) Divisional to Application Number	:NA
Filing Date	:NA

(71)**Name of Applicant :**
1)COLGATE PALMOLIVE COMPANY
Address of Applicant :300 Park Avenue, New York ,New York 10022 U.S.A.
(72)**Name of Inventor :**
1)KENNEDY, Sharon
2)BOYKE ,Christine
3)JIMENEZ, Eduardo

(57) Abstract :
A dispenser for dispensing a mixture of oral care materials. In one aspect the invention can be a dispenser (400) comprising: a housing (410) having a first reservoir chamber (430) containing a first oral care material (431) and a second reservoir chamber (440) containing a second different oral care material (441); a mixing chamber (450) disposed in the housing , a mixing screw (470) disposed within the mixing chamber and having an actuator (471) for rotating the mixing screw; a first delivery port (434) for introducing the first oral care material into the mixing chamber and a second delivery port (444) for introducing the second oral care material into the mixing chamber; a dispensing nozzle (460) for dispensing a mixture of the first and second oral care materials; and wherein rotation of the mixing screw draws the first and second oral care materials into the mixing chamber and expels the mixture of the first and second oral care materials from the nozzle.

No. of Pages : 43 No. of Claims : 11

(12) PATENT APPLICATION PUBLICATION
(19) INDIA
(22) Date of filing of Application :18/04/2012
(21) Application No.3343/DELNP/2012 A
(43) Publication Date : 23/10/2015

(54) Title of the invention : BENZAZEPINE COMPOUND

(51) International classification :C07D 223/16
(31) Priority Document No :2009-245434
(32) Priority Date :26/10/2009
(33) Name of priority country :Japan
(86) International Application No :PCT/JP2010/068807
Filing Date :25/10/2010
(87) International Publication No :WO 2011/052519
(61) Patent of Addition to Application Number :NA
Filing Date :NA
(62) Divisional to Application Number :NA
Filing Date :NA

(71)**Name of Applicant :**
1)OTSUKA PHARMACEUTICAL CO., LTD.
Address of Applicant :9, KANDA-TSUKASAMACHI 2-CHOME, CHIYODA-KU, TOKYO 1018535, JAPAN Japan
(72)**Name of Inventor :**
1)KEIZO KAN
2)TADAAKI OHTANI

(57) Abstract :
An object of the present invention is to provide a novel benzazepine compound or a salt thereof, which has excellent vasopressin antagonistic activity. The benzazepine compound or a salt thereof of the present invention is represented by Formula (1): wherein R1, R2 and R5 may be the same or different and each represents H or D; and R3 and R4 each represents a C1-6 alkyl group, a C1-6 deuteroalkyl group, or a C1-6 perdeuteroalkyl group.

No. of Pages : 32 No. of Claims : 8

(12) PATENT APPLICATION PUBLICATION
(19) INDIA
(22) Date of filing of Application :21/04/2015
(21) Application No.3343/DELNP/2015 A
(43) Publication Date : 23/10/2015

(54) Title of the invention : ORAL CARE SYSTEM

(51) International classification :A46B11/00,A46B15/00,B05C17/005
(31) Priority Document No :NA
(32) Priority Date :NA
(33) Name of priority country :NA
(86) International Application No :PCT/US2012/067668
Filing Date :04/12/2012
(87) International Publication No :WO 2014/088547
(61) Patent of Addition to Application Number :NA
Filing Date :NA
(62) Divisional to Application Number :NA
Filing Date :NA

(71)**Name of Applicant :**
1)COLGATE- PALMOLIVE COMPANY
Address of Applicant :300 Park Avenue, New York ,New York 10022 U.S.A.
(72)**Name of Inventor :**
1)KENNEDY ,Sharon
2)BOYKE ,Christine
3)JIMENEZ, Eduardo J.
4)BROWN, James R.

(57) Abstract :
An oral care system including a toothbrush and a dispenser that is detachably coupled thereto. In one aspect, the invention can be an oral care system comprising: a toothbrush comprising a handle , a head and a plurality of tooth cleaning elements extending from the head; and a dispenser detachably coupled to the toothbrush the dispenser comprising a housing, a first reservoir chamber disposed in the housing containing a first oral care material and a second reservoir chamber disposed in the housing containing a second oral care material , the second oral care material different than the first oral care material.

No. of Pages : 43 No. of Claims : 25

(12) PATENT APPLICATION PUBLICATION
(21) Application No.3264/DELNP/2012 A
(19) INDIA
(22) Date of filing of Application :16/04/2012
(43) Publication Date : 23/10/2015

(54) Title of the invention : A HYDRODYNAMIC MACHINE, ESPECIALLY A HYDRODYNAMIC RETARDER

(51) International classification :B60T 10/02
(31) Priority Document No :10 2009 058 341.6
(32) Priority Date :15/12/2009
(33) Name of priority country :Germany
(86) International Application No :PCT/EP2010/007525
Filing Date :10/12/2010
(87) International Publication No :WO 2011/082759
(61) Patent of Addition to Application Number :NA
Filing Date :NA
(62) Divisional to Application Number :NA
Filing Date :NA

(71)**Name of Applicant :**
1)VOITH PATENT GMBH
Address of Applicant :ST.POLTENER STR. 43, 89522 HEIDEHEIM GERMANY (DE) Germany
(72)**Name of Inventor :**
1)ADAMS, WERNER
2)LAUKEMANN, DIETER
3)OHR, THOMAS

(57) Abstract :
A hydrodynamic machine, in particular a hydrodynamic retarder, having a first revolving blade wheel (1); having a second blade wheel (2), likewise revolving or stationary; the two blade wheels (1, 2) form a working chamber (3) that is filled or can be filled With a working medium in order to transmit a torque hydrodynamically from the first blade wheel (1) to the second blade wheel (2); having a casing (4) which, together with one of the two blade wheels (2), encloses the other blade wheel (1) or both blade wheels (1, 2); having a drive shaft (5) in order to drive the first or the second blade wheel (1, 2) mechanically; the drive shaft (5) being sealed off with respect to the casing (4) by means of a sliding ring seal (6) in order to prevent any escape of working medium between the drive shaft (5) and the casing (4); the sliding ring seal (6) has a sealing liquid supply (7) in order to cool and/or to lubricate the sliding ring seal (6); characterized by the following features: the sliding ring seal (6) has a first sliding ring (8) and a second sliding ring (9) which are arranged to enclose one another concentrically in the radial direction and each have a sealing surface (10, 11), and which, together with a mating element, seal off a sealing gap running in the radial direction with respect to the drive shaft (5); a sealing liquid channel (12) opens into the sliding ring seal (6) in the radial direction between the two sealing surfaces (10, 11) in order to cool and/or to lubricate the two sealing surfaces (10, 11) with sealing liquid.

No. of Pages : 17 No. of Claims : 9

(12) PATENT APPLICATION PUBLICATION
(19) INDIA
(22) Date of filing of Application :16/04/2012
(21) Application No.3265/DELNP/2012 A
(43) Publication Date : 23/10/2015

(54) Title of the invention : APPARATUS FOR RESPIRATING OF PATIENTS

(51) International classification :A61M 16/01
(31) Priority Document No :1037373
(32) Priority Date :07/10/2009
(33) Name of priority country :Netherlands
(86) International Application No :PCT/NL2010/000143
Filing Date :06/10/2010
(87) International Publication No :WO 2011/043651
(61) Patent of Addition to Application Number :NA
Filing Date :NA
(62) Divisional to Application Number :NA
Filing Date :NA

(71)**Name of Applicant :**
1)ALCMAIR PARTNERS BV
Address of Applicant :KLIPPERSTRAAT 28, NL-1826 DW ALKMAAR, NETHERLANDS Netherlands
(72)**Name of Inventor :**
1)BORM, PIETER
2)WESTERKAMP, BART

(57) Abstract :
Apparatus for the respirating of patients with means for the circulating in one direction in a line system of gas, with supplies for the various components of the gas and with a line system part in which a carbon dioxide absorber device is provided, whereby the line system further is provided with a by-pass line for leading of the respiratory gas outside of the line system part with the absorber device, characterized in that a control unit is provided by means of which the operating of the closing means takes place in dependence on one or more measurements of the concentration of carbon dioxide in the respiratory gas in the line system, and wherein the line system is provided with a circulation blower.

No. of Pages : 15 No. of Claims : 18

(12) PATENT APPLICATION PUBLICATION
(21) Application No.3367/DELNP/2012 A
(19) INDIA
(22) Date of filing of Application :18/04/2012
(43) Publication Date : 23/10/2015

(54) Title of the invention : OLIGOMERISATION OF OLEFINIC COMPOUNDS WITH REDUCED POLYMER FORMATION

(51) International classification :C07C 2/32
(31) Priority Document No :2009/07285
(32) Priority Date :19/10/2009
(33) Name of priority country :South Africa
(86) International Application No :PCT/IB2010/054631
Filing Date :13/10/2010
(87) International Publication No :WO 2011/048527
(61) Patent of Addition to Application Number :NA
Filing Date :NA
(62) Divisional to Application Number :NA
Filing Date :NA

(71)**Name of Applicant :**
1)SASOL TECHNOLGOY (PTY) LIMITED
Address of Applicant :1 STURDEE AVENUE, ROSEBANK, 2196 JOHANNESBURG, SOUTH AFRICA South Africa
(72)**Name of Inventor :**
1)HANTON, MARTIN JOHN
2)SMITH, DAVID MATTHEW
3)GABRIELLI, WILLIAM FULLARD
4)KELLY, MARK, WILLIAM

(57) Abstract :
The invention relaters to a process for producing an oligomeric product by oligomerisation of at least one olefinic compound, the process including a) providing an activated oligomerisation catalyst by combining, in any order, i) a source of chromium, ii) a ligating compound of the formula I (R1)m X1 (Y) X2 (R2)n..... I wherein X1 and X2 are independently an atom selected from the group consisting of nitrogen, phosphorus, arsenic, antimony, bismuth, oxygen, sulphur and selenium or said atom oxidized by S, Se, N or 0 where the valence of X1 and/or X2 allows for such oxidation, Y is a linking group between X1 and X2, m and n are independently 0, 1 or a larger integer, and R1 and R2are independently hydrogen, a hydrocarbyl group, an organoheteryl group or a heterohydrocarbyl group, and R1 being the same or different when m>1, and R2 being the same or different when n>1, iii) a catalyst activator or combination of catalyst activators, b) providing a zinc compound, and c) contacting the at least one olefinic compound with a composition containing the activated oligomerisation catalyst and the zinc compound, the zinc compound being present in a sufficient quantity such that the ratio of the molar amount of zinc in the zinc compound to the molar amount of chromium in the source of chromium is between 1 and 10000 The invention also provides for a process for activating an oligomerisation catalyst to be used to produce an oligomeric product from at least one olefinic compound, as described above.

No. of Pages : 40 No. of Claims : 15

(12) PATENT APPLICATION PUBLICATION
(21) Application No.1065/DEL/2014 A
(19) INDIA
(22) Date of filing of Application :19/04/2014
(43) Publication Date : 23/10/2015

(54) Title of the invention : VEHICLE SPEED ALERTING AND CONTROLLING DEVICE

(51) International classification	:B60T8/32	(71)**Name of Applicant :**
(31) Priority Document No	:NA	**1)VIJAY SINGH**
(32) Priority Date	:NA	Address of Applicant :HOUSE NO. 297/H, KRISHAN NAGAR EXT. DEHRADUN, UTTARAKHAND Uttarakhand India
(33) Name of priority country	:NA	
(86) International Application No	:NA	
Filing Date	:NA	**2)HIMANSHU CHAWLA**
(87) International Publication No	: NA	(72)**Name of Inventor :**
(61) Patent of Addition to Application Number	:NA	**1)VIJAY SINGH**
Filing Date	:NA	**2)HIMANSHU CHAWLA**
(62) Divisional to Application Number	:NA	
Filing Date	:NA	

(57) Abstract :
The present invention relates to a speed alerting and controlling device for a vehicle. The device includes at least one sensor to detect speed and RPM of vehicle, at least one indicator and a controller. The controller with integrated GSM module coupled to the said sensor and indicator determines when a vehicle speed exceeds a preset speed for a first time period, and generates a local indication to reduce the speed of the vehicle. The controller also sends a speed exceeded text message alert to one or more pre-registered remote communication device, if the speed is not reduced after first local indication and further voice calls the registered device if no response is received from remote device after sending multiple text message alerts. The controller automatically locks the speed of vehicle to such limit as received in response text message from the remote device or to such preset minimum speed when no response is received from remote device.

No. of Pages : 16 No. of Claims : 9

(12) PATENT APPLICATION PUBLICATION
(19) INDIA
(22) Date of filing of Application :16/04/2012
(21) Application No.3285/DELNP/2012 A
(43) Publication Date : 23/10/2015

(54) Title of the invention : FUEL DISPENSING UNIT WITH HINGED DOOR

(51) International classification :B67D 7/84
(31) Priority Document No :NA
(32) Priority Date :NA
(33) Name of priority country :NA
(86) International Application No :PCT/EP2009/063622
Filing Date :16/10/2009
(87) International Publication No :WO 2011/044954
(61) Patent of Addition to Application Number :NA
Filing Date :NA
(62) Divisional to Application Number :NA
Filing Date :NA

(71)**Name of Applicant :**
1)DRESSER WAYNE AB
Address of Applicant :BOX 30049, S-200 61 MALMO SWEDEN. Sweden
(72)**Name of Inventor :**
1)BIRKLER ANNIKA
2)HELGESSON HANNA
3)LARSSON BENGT I.
4)BURNETT KEVIN
5)DE LA PORT PAUL
6)NEGLEY SCOTT
7)THOMAS NEIL

(57) Abstract :
The present invention relates to a fuel dispensing unit (1) for refuelling vehicles, comprising a base module (2) comprising a housing having a front side (10), a rear side (12) and end sides (11, 13) connecting said front and rear sides (10, 12), said housing being enclosed by wall sections. At least a first of said wall sections forms a first door (20), wherein said first door (20) is extending along at least a portion of the front side (10) or the rear side (12) and at least a first portion of one of the end sides (11, 13), said first door (20) being pivotable towards a second portion of said one of the end sides.

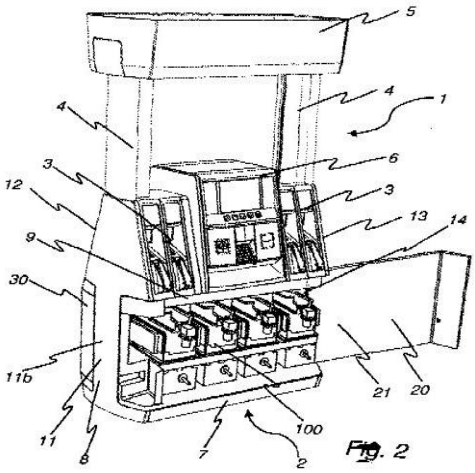

Fig. 2

No. of Pages : 23 No. of Claims : 12

(12) PATENT APPLICATION PUBLICATION
(19) INDIA
(22) Date of filing of Application :16/04/2012
(21) Application No.3286/DELNP/2012 A
(43) Publication Date : 23/10/2015

(54) Title of the invention : KIT OF PARTS FOR A MODULE HAVING A NOZZLE BOOT AND FUEL DISPENSING UNIT HAVING A NOZZLE MODULE ASSEMBLED WITH SUCH A KIT OF PARTS

(51) International classification :B67D 7/04
(31) Priority Document No :NA
(32) Priority Date :NA
(33) Name of priority country :NA
(86) International Application No :PCT/EP2009/063624
Filing Date :16/10/2009
(87) International Publication No :WO 2011/044956
(61) Patent of Addition to Application Number :NA
Filing Date :NA
(62) Divisional to Application Number :NA
Filing Date :NA

(71)**Name of Applicant :**
1)DRESSER WAYNE AB
Address of Applicant :BOX 30049, S-200 61 MALMO SWEDEN. Sweden
(72)**Name of Inventor :**
1)BIRKLER ANNIKA
2)BURNETT KEVIN
3)DE LA PORT PAUL
4)HELGESSON HANNA
5)LARSSON BENGT I.
6)NEGLEY SCOTT
7)THOMAS NEIL

(57) Abstract :
This invention relates to a kit of parts (1), comprising top plates (2), gable cover plates (3), gable structures each comprising a nozzle boot, side cover plates, and side structures (4) each comprising a nozzle boot (5), which kit of parts (1) is suitable for assembling a nozzle module according to any one of three configurations. The invention also relates to a fuel dispensing unit for refueling vehicles.

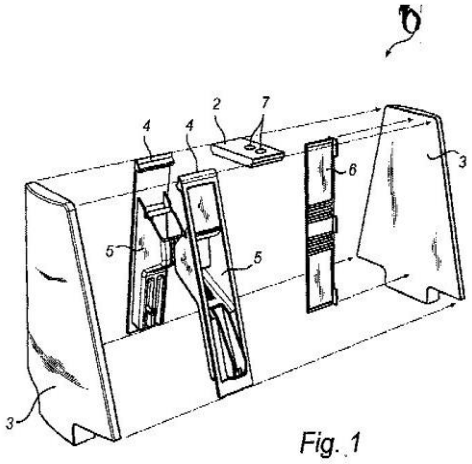

Fig. 1

No. of Pages : 17 No. of Claims : 11

(12) PATENT APPLICATION PUBLICATION
(19) INDIA
(22) Date of filing of Application :16/04/2012
(21) Application No.3287/DELNP/2012 A
(43) Publication Date : 23/10/2015

(54) Title of the invention : MODULE WITH NOZZLE BOOT FOR A FUEL DISPENSING UNIT

(51) International classification :B67D 7/84
(31) Priority Document No :NA
(32) Priority Date :NA
(33) Name of priority country :NA
(86) International Application No :PCT/EP2009/063623
Filing Date :16/10/2009
(87) International Publication No :WO 2011/044955
(61) Patent of Addition to Application Number :NA
Filing Date :NA
(62) Divisional to Application Number :NA
Filing Date :NA

(71)**Name of Applicant :**
1)DRESSER WAYNE AB
Address of Applicant :P.O. BOX 30049, 200 61 MALMO, SWEDEN Sweden
(72)**Name of Inventor :**
1)BIRKLER ANNIKA
2)BURNETT KEVIN
3)DE LA PORT PAUL
4)HELGESSON HANNA
5)LARSSON BENGT I.
6)NEGLEY SCOTT
7)THOMAS NEIL

(57) Abstract :
The invention relates to a nozzle module (1) for a fuel dispensing unit comprising a top section (2) attachable to a column module of said fuel dispensing unit, a bottom section (3) attachable to a base module of said fuel dispensing unit, at least one nozzle boot (8) for holding a nozzle, which nozzle boot (8) is arranged between said top section (2) and said bottom section (3). The nozzle module (1) has an internal channel (9) enabling fluid communication through said nozzle module (1). The invention also relates to a fuel dispensing unit comprising such a nozzle module (1).

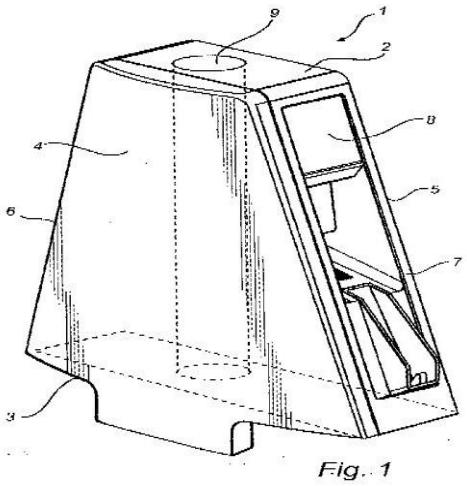

Fig. 1

No. of Pages : 16 No. of Claims : 13

(12) PATENT APPLICATION PUBLICATION
(19) INDIA
(22) Date of filing of Application :18/04/2012

(21) Application No.3379/DELNP/2012 A
(43) Publication Date : 23/10/2015

(54) Title of the invention : BACTERIAL SPORE HAVING THERAPEUTIC AGENT ADSORBED ON ITS SURFACE

(51) International classification :A61K 35/74
(31) Priority Document No :0916570.5
(32) Priority Date :21/09/2009
(33) Name of priority country :U.K.
(86) International Application No :PCT/GB2010/001771
Filing Date :21/09/2010
(87) International Publication No :WO 2011/033275
(61) Patent of Addition to Application Number :NA
Filing Date :NA
(62) Divisional to Application Number :NA
Filing Date :NA

(71)**Name of Applicant :**
1)ROYAL HOLLOWAY AND BEDFORD NEW COLLEGE
Address of Applicant :EGHAM, SURREY TW20 0EX, UNITED KINGDOM U.K.
(72)**Name of Inventor :**
1)CUTTING, SIMON, MICHAEL
2)HUYNH, HONG, ANH

(57) Abstract :
The present invention relates to a method of coating a spore with one or more therapeutic agents. The present invention also relates to a coated spore obtained by the method of the present invention and the use of the coated spore as a vaccine.

Figure 1A

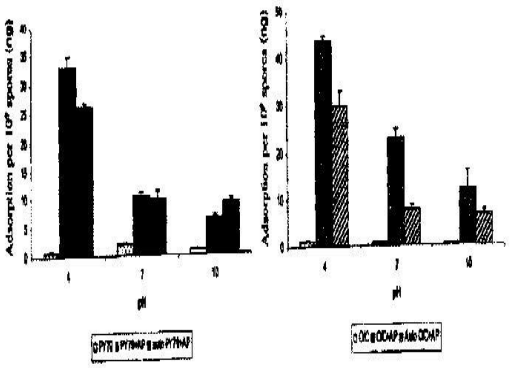

No. of Pages : 71 No. of Claims : 34

(12) PATENT APPLICATION PUBLICATION
(19) INDIA
(22) Date of filing of Application :16/04/2012
(21) Application No.3279/DELNP/2012 A
(43) Publication Date : 23/10/2015

(54) Title of the invention : ELECTRONICS MODULE FOR A FUEL DISPENSING UNIT

(51) International classification :B67D 7/64
(31) Priority Document No :NA
(32) Priority Date :NA
(33) Name of priority country :NA
(86) International Application No :PCT/EP2009/063619
Filing Date :16/10/2009
(87) International Publication No :WO 2011/044951
(61) Patent of Addition to Application Number :NA
Filing Date :NA
(62) Divisional to Application Number :NA
Filing Date :NA

(71)**Name of Applicant :**
1)DRESSER WAYNE AB
Address of Applicant :BOX 30049, S-200 61 SWEDEN. Sweden
(72)**Name of Inventor :**
1)BIRKLER ANNIKA
2)HELGESSON HANNA
3)LARSSON BENGT I.
4)NA
5)BURNETT KEVIN
6)DE LA PORT PAUL
7)NEGLEY SCOTT
8)THOMAS NEIL

(57) Abstract :
It is presented an electronics module (10) for use in a fuel dispensing unit (6a, 6b, 6c). The electronics module (10) comprises electronics circuitry (28) and a conductor (18) for connecting the electronic circuitry (28) to the fuel dispensing unit (6a, 6b, 6c). Further, the electronics module (10) has a channel means (14) extending from a first (15) to a second side (16) of the electronics module (10) defining a ventilation channel for the conductor (18) to provide venting thereof in order to reduce fuel vapors at the electronic circuitry (28).

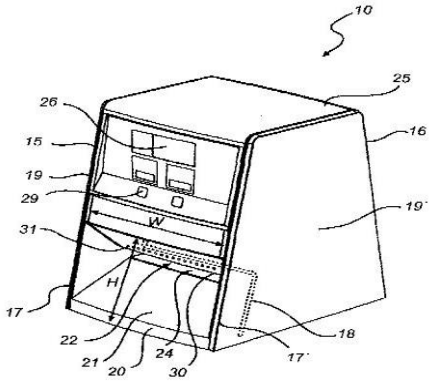

Fig. 3a

No. of Pages : 37 No. of Claims : 13

(12) PATENT APPLICATION PUBLICATION
(19) INDIA
(22) Date of filing of Application :16/04/2012
(21) Application No.3280/DELNP/2012 A
(43) Publication Date : 23/10/2015

(54) Title of the invention : CONNECTED OPTICAL CABLE

(51) International classification :G02B 6/255
(31) Priority Document No :2009-240096
(32) Priority Date :19/10/2009
(33) Name of priority country :Japan
(86) International Application No :PCT/JP2010/067197
Filing Date :01/10/2010
(87) International Publication No :WO 2011/048926
(61) Patent of Addition to Application Number :NA
Filing Date :NA
(62) Divisional to Application Number :NA
Filing Date :NA

(71)**Name of Applicant :**
1)SUMITOMO ELECTRIC INDUSTRIES, LTD.
Address of Applicant :5-33, KITAHAMA 4-CHOME, CHUO-KU, OSAKA-SHI, OSAKA 541-0041 JAPAN. Japan
(72)**Name of Inventor :**
1)MURASHIMA KIYOTAKA
2)TOYOOKA HIROYASU
3)HOMMA TOSHIHIKO
4)SATO RYUICHIRO
5)IWAI KEITARO

(57) Abstract :
The present invention provides a connected optical cable capable of reinforcing a spliced portion of coated optical fibers to have adequate strength. The connected optical cable includes: a pair of optical fiber cables in which high-strength fibers are aligned in the longitudinal direction around coated optical fibers, the outer circumference of the coated optical fibers being covered by sheaths; and a connected portion in which the pair of optical fiber cables are connected, the coated optical fibers being extended from the sheaths, glass fibers exposed from the coating of the coated optical fibers being spliced to each other, and the connected portion being covered and formed into an integral unit, together with the high-strength fibers exposed from the sheaths, by a reinforcing tube placed over the optical fiber cables and caused to contract so that both ends of the reinforcing tube engage the sheath of the respective optical fiber cables.

No. of Pages : 15 No. of Claims : 5

(12) PATENT APPLICATION PUBLICATION
(21) Application No.3281/DELNP/2012 A
(19) INDIA
(22) Date of filing of Application :16/04/2012
(43) Publication Date : 23/10/2015

(54) Title of the invention : SORF CONSTRUCTS AND MULTIPLE GENE EXPRESSION

(51) International classification :C07K 16/00
(31) Priority Document No :61/256,544
(32) Priority Date :30/10/2009
(33) Name of priority country :U.S.A.
(86) International Application No :PCT/US2010/054475
Filing Date :28/10/2010
(87) International Publication No :WO 2011/053699
(61) Patent of Addition to Application Number :NA
Filing Date :NA
(62) Divisional to Application Number :NA
Filing Date :NA

(71)**Name of Applicant :**
1)ABBOTT LABORATORIES
Address of Applicant :100 ABBOTT PARK, ABBOTT PARK, IL 60064 U.S.A. U.S.A.
(72)**Name of Inventor :**
1)CARSON GERALD R.
2)GION WENDY R.
3)KUNES YUNE Z.
4)LEISE III WALTER F.
5)DAVIS-TABER RACHEL A.
6)FUNG EMMA

(57) Abstract :
Embodiments of the invention relate to vector constructs and methods for expression of polypeptides including multimeric products such as therapeutic antibodies. Particular constructs allow for the generation of expression products from a single open reading frame (sORF). An embodiment provides an isolated or purified expression vector for generating one or more recombinant protein products comprising a single open reading frame insert; said insert comprising a signal peptide nucleic acid sequence encoding a signal peptide; a first nucleic acid sequence encoding a first polypeptide; a first intervening nucleic acid sequence encoding a first protein cleavage site, wherein said first protein cleavage site is provided by an intein segment of a Ion protease gene of Pyrococcus or a klbA gene of Pyrococcus or Methanococcus, or a modified intein segment derived therefrom; and a second nucleic acid sequence encoding a second polypeptide. Certain embodiments of constructs and methods employ an intein segment of a Ion protease gene of Pyrococcus abyssi, Pyrococcus furiosus, or Pyrococcus horikoshii OT3; or an intein segment of a klbA gene of Pyrococcus abyssi, Pyrococcus furiosus, or Methanococcus jannaschir, or other intein segment.

No. of Pages : 169 No. of Claims : 46

(12) PATENT APPLICATION PUBLICATION
(21) Application No.3370/DELNP/2012 A
(19) INDIA
(22) Date of filing of Application :18/04/2012
(43) Publication Date : 23/10/2015

(54) Title of the invention : GREASE COLLECTOR, WIND TURBINE NACELLE AND METHOD FOR COLLECTING EXCESS GREASE

(51) International classification :F03D 11/00
(31) Priority Document No :09014636
(32) Priority Date :24/11/2009
(33) Name of priority country :EPO
(86) International Application No :PCT/EP2010/062184
Filing Date :20/08/2010
(87) International Publication No :PCT/EP2010/062184
(61) Patent of Addition to Application Number :NA
Filing Date :NA
(62) Divisional to Application Number :NA
Filing Date :NA

(71)**Name of Applicant :**
1)SIEMENS AKTIENGESELLSCHAFT
Address of Applicant :WITTELSBACHERPLATZ 2 80333, MUNCHEN, GERMANY Germany
(72)**Name of Inventor :**
1)MUNK-HANSEN THORKIL

(57) Abstract :
A grease collector (15) is described, which is connectable to a wind turbine nacelle (3). The grease collector (15) comprises a channel (16) with a flexible side portion (17) for providing a sealing between the nacelle (3) and a wind turbine tower (2). Moreover, a wind turbine nacelle (3) and a wind turbine (1) comprising an inventive grease collector (15), and a method for collecting excess grease which is emitted from a yaw system (7) of a wind turbine (1) are provided.

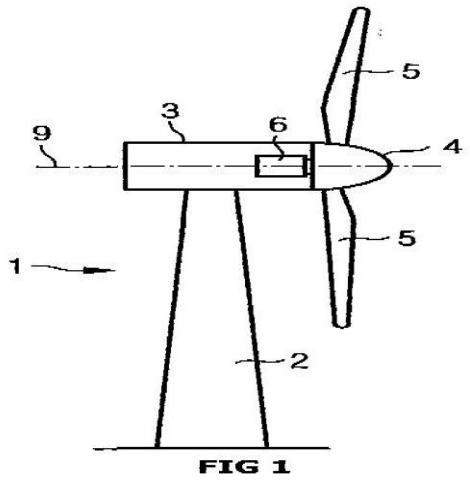

FIG 1

No. of Pages : 16 No. of Claims : 15

(12) PATENT APPLICATION PUBLICATION
(19) INDIA
(22) Date of filing of Application :16/04/2012
(21) Application No.3260/DELNP/2012 A
(43) Publication Date : 23/10/2015

(54) Title of the invention : VESSEL INCORPORATING FILM WITH ENHANCED ANTI-STATIC PROPERTIES AND RELATED METHODS

(51) International classification :B32B 27/00
(31) Priority Document No :61/243,092
(32) Priority Date :16/09/2009
(33) Name of priority country :U.S.A.
(86) International Application No :PCT/US2010/049098
Filing Date :16/09/2010
(87) International Publication No :WO 2011/035008
(61) Patent of Addition to Application Number :NA
Filing Date :NA
(62) Divisional to Application Number :NA
Filing Date :NA

(71)**Name of Applicant :**
1)ADVANCED TECHNOLOGY MATERIALS, INC.
Address of Applicant :7 COMMERCE DRIVE DANBURY, CT 06810, UNITED STATES OF AMERICA U.S.A.
2)ATMI NV
(72)**Name of Inventor :**
1)PETHE, VISHWAS
2)BHELLA, RICHARD
3)VANHAMEL, STEVEN
4)MEESTERS, ELS

(57) Abstract :
An apparatus for use in material processing takes the form of a vessel including a wall at least partially formed of a flexible film. The film includes at least two layers having an anti-static agent and sandwiching an intermediate layer. Related methods are also disclosed.

No. of Pages : 18 No. of Claims : 61

(12) PATENT APPLICATION PUBLICATION
(19) INDIA
(22) Date of filing of Application :16/04/2012
(21) Application No.3261/DELNP/2012 A
(43) Publication Date : 23/10/2015

(54) Title of the invention : IN-VIVO PLATELET FUNCTION TEST BY ONLINE BLEEDING VOLUME MEASUREMENT

(51) International classification :G01N 33/86
(31) Priority Document No :12/579,105
(32) Priority Date :14/10/2009
(33) Name of priority country :U.S.A.
(86) International Application No :PCT/US2010/052054
Filing Date :08/10/2010
(87) International Publication No :WO 2011/046834
(61) Patent of Addition to Application Number :NA
Filing Date :NA
(62) Divisional to Application Number :NA
Filing Date :NA

(71)**Name of Applicant :**
1)KLEIN, JEFFREY A.
Address of Applicant :30280 RANCHO VIEJO ROAD SAN JUAN CAPISTRANO CALIFORNIA 92675 UNITED STATES OF AMERICA U.S.A.
(72)**Name of Inventor :**
1)KLEIN, JEFFREY A.

(57) Abstract :
A method for remotely determining a patients excessive bleeding tendency and a patients resistance to blood thinning medication is disclosed by analyzing blotches of blood formed on a blotter paper which are captured as an image and sent to a service provider who calculates a value associated with the bleeding volume of the patient from analysis of the pixels of the image and its comparison against a reference blot.

FIG. 8

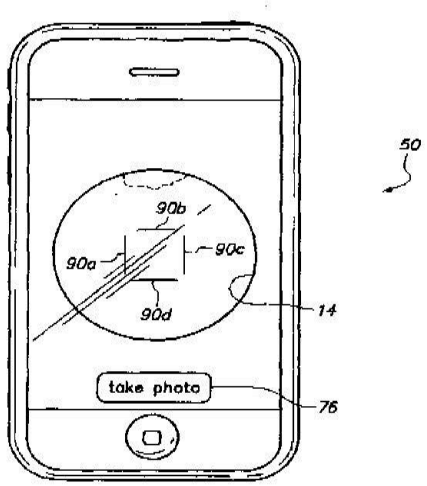

No. of Pages : 56 No. of Claims : 33

(12) PATENT APPLICATION PUBLICATION
(19) INDIA
(22) Date of filing of Application :18/04/2012
(21) Application No.3351/DELNP/2012 A
(43) Publication Date : 23/10/2015

(54) Title of the invention : FLUID TRANSFER DEVICES WITH SEALING ARRANGEMENT

(51) International classification :A61J 1/20
(31) Priority Document No :202069
(32) Priority Date :12/11/2009
(33) Name of priority country :Israel
(86) International Application No :PCT/IL2010/000854
Filing Date :19/10/2010
(87) International Publication No :WO 2011/058545
(61) Patent of Addition to Application Number :NA
Filing Date :NA
(62) Divisional to Application Number :NA
Filing Date :NA

(71)**Name of Applicant :**
1)MEDIMOP MEDICAL PROJECTS LTD
Address of Applicant :P.O. BOX 2499, 17 HATIDHAR STREET, 43665 RA'ANANA, ISRAEL Israel
(72)**Name of Inventor :**
1)NIMROD LEV
2)NIV BEN SHALOM

(57) Abstract :
The present invention is directed toward fluid transfer devices including a vial adapter having a top wall and a cannula with a cannula tip, and an elastic O-ring like sealing element sealingly encircling the cannula and initially disposed towards the cannula tip and spaced apart from the top wall, the sealing element being brought into initial contact with the vial stopper subsequent to the cannula tip contacting the vial stopper at a puncture site and thereafter being slidingly urged towards the top wall and continuously sealing the puncture site during snap fit mounting the vial adapter on the vial.

No. of Pages : 19 No. of Claims : 6

(12) PATENT APPLICATION PUBLICATION
(19) INDIA
(22) Date of filing of Application :18/04/2012
(21) Application No.3352/DELNP/2012 A
(43) Publication Date : 23/10/2015

(54) Title of the invention : METHOD AND ARRANGEMENT FOR CONTROLLING ANODE RECIRCULATION

(51) International classification :H01M 8/04
(31) Priority Document No :20096128
(32) Priority Date :30/10/2009
(33) Name of priority country :Finland
(86) International Application No :PCT/FI2010/050704
Filing Date :14/09/2010
(87) International Publication No :WO 2011/051544
(61) Patent of Addition to Application Number :NA
Filing Date :NA
(62) Divisional to Application Number :NA
Filing Date :NA

(71)**Name of Applicant :**
1)WARTSILA FINLAND OY
Address of Applicant :TARHAAJANTIE 2, FI-65380, VAASA, FINLAND Finland
(72)**Name of Inventor :**
1)HAKALA, TUOMAS

(57) Abstract :
The object of the invention is a fuel cell system arrangement for controlling Oxygen-to-Carbon (O/C) relationship comprises means 112 for providing water to the anode side fuel recirculation, at least one water pump 118 for pumping the provided water to facilitate a water flow, means 120 for evaporating water from said facilitated water flow for generating pressurized steam having at least the motive pressure for a steam jet-ejector 122, and said at least one steam jet-ejector 122 for injecting at least part of said steam to the fuel cell system and entraining part of the essentially low pressure anode exhaust gas stream in said anode side gas recirculation and compressing the gas mixture to an intermediate pressure of the fuel feed-in stream for controlling Oxygen-to-Carbon (O/C) relationship in the fuel side of the fuel cell system.

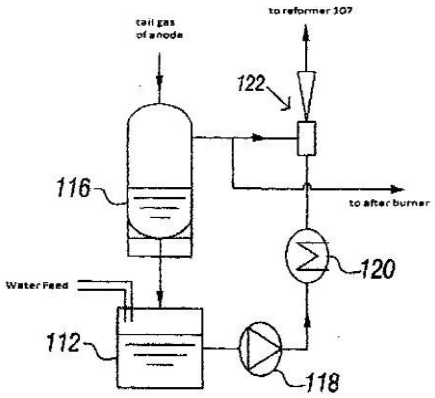

Figure 3

No. of Pages : 16 No. of Claims : 12

(12) PATENT APPLICATION PUBLICATION
(19) INDIA
(22) Date of filing of Application :18/04/2012
(21) Application No.3353/DELNP/2012 A
(43) Publication Date : 23/10/2015

(54) Title of the invention : GLYCOSYL TRANSFERASE FROM CHINESE HAMSTER AND RELATED METHODS

(51) International classification :C12N 9/10
(31) Priority Document No :61/260, 232
(32) Priority Date :11/11/2009
(33) Name of priority country :U.S.A.
(86) International Application No :PCT/US2010/056230
Filing Date :10/11/2010
(87) International Publication No :WO 2011/060069
(61) Patent of Addition to Application Number :NA
Filing Date :NA
(62) Divisional to Application Number :NA
Filing Date :NA

(71)**Name of Applicant :**
1)MOMENTA PHARMACEUTICALS, INC.
Address of Applicant :675 WEST KENDALL STREET, CAMBRIDGE, MA 02142, U.S.A. U.S.A.
(72)**Name of Inventor :**
1)MEADOR III, JAMES, W.

(57) Abstract :
A glycosyl transferase from Chinese hamster and related methods are described.

No. of Pages : 89 No. of Claims : 26

(12) PATENT APPLICATION PUBLICATION
(21) Application No.3354/DELNP/2012 A
(19) INDIA
(22) Date of filing of Application :18/04/2012
(43) Publication Date : 23/10/2015

(54) Title of the invention : COMBINING RADIOIMMUNOTHERAPY AND ANTIBODY-DRUG CONJUGATES FOR IMPROVED CANCER THERAPY

(51) International classification :A61K 51/00
(31) Priority Document No :12/629,404
(32) Priority Date :02/12/2009
(33) Name of priority country :U.S.A.
(86) International Application No :PCT/US2010/058519
Filing Date :01/12/2010
(87) International Publication No :WO 2011/068845
(61) Patent of Addition to Application Number :NA
Filing Date :NA
(62) Divisional to Application Number :NA
Filing Date :NA

(71)**Name of Applicant :**
1)IMMUNOMEDICS, INC.
Address of Applicant :300 AMERICAN ROAD, MORRIS PLAINS,NEW JERSEY 07950, U.S.A. U.S.A.
(72)**Name of Inventor :**
1)GOVINDAN, SERENGULAM V.
2)GOLDENBERG, DAVID, M.

(57) Abstract :
Described herein are compositions and methods of use of radionuclide-antibody conjugates (for RAIT) and drug-antibody conjugates (ADC). The combination of RAIT and ADC was more efficacious than either RAIT alone, ADC alone, or the sum of effects of RAIT and ADC. The unexpected synergy resulted in decreased tumor growth rate and increased survival, with a high incidence of tumor-free survival in Capan-1 human pancreatic cancer xenografts in nude mice.

No. of Pages : 106 No. of Claims : 35

(12) PATENT APPLICATION PUBLICATION
(19) INDIA
(22) Date of filing of Application :16/04/2012
(21) Application No.3276/DELNP/2012 A
(43) Publication Date : 23/10/2015

(54) Title of the invention : TRAFFIC SIGNAL CONTROL SYSTEM AND METHOD

(51) International classification :G08G 1/081
(31) Priority Document No :0916204.1
(32) Priority Date :16/09/2009
(33) Name of priority country :U.K.
(86) International Application No :PCT/EP2010/063654
Filing Date :16/09/2010
(87) International Publication No :WO 2011/033042
(61) Patent of Addition to Application Number :NA
Filing Date :NA
(62) Divisional to Application Number :NA
Filing Date :NA

(71)**Name of Applicant :**
1)ROAD SAFETY MANAGEMENT LTD.
Address of Applicant :C/O COBB IRELAND LTD., STRAFFAN FARM, STRAFFAN, CO. KILDARE, IRELAND Ireland
(72)**Name of Inventor :**
1)IISAKKI KOSONEN
2)MARTIN MANTALVANOS

(57) Abstract :
The invention relates to a traffic signal control system for controlling a plurality of signal junctions comprising a signal group oriented multi-agent control scheme, each agent operates independently and represents one or more traffic signals at a signal junction; means for each agent for determining traffic conditions at its signal junction and traffic conditions at neighboring agents; and means for applying fuzzy logic in signal control operations, wherein signal control operation is based on traffic conditions at each agent and one or more neighboring agents, such that the control operation is distributed to each agent to control each of said plurality of signal junctions. An advantage of the system is that this approach in combining the flexible signal group control with the artificial intelligence of fuzzy logic dynamic control is achieved. The operation of the control system is based on detector data input, that is refined to real time traffic situation model. Through the traffic model, the decision part of the system (fuzzy logic) is observing the traffic situation in the whole intersection. The signal control operation is based on signal group orientation, in which the control operation is distributed to several signal group agents.

No. of Pages : 30 No. of Claims : 19

(12) PATENT APPLICATION PUBLICATION
(21) Application No.3277/DELNP/2012 A
(19) INDIA
(22) Date of filing of Application :16/04/2012
(43) Publication Date : 23/10/2015

(54) Title of the invention : LOW VOLTAGE LASER DIODES ON {20-21} GALLIUM AND NITROGEN CONTAINING SUBSTRATES

(51) International classification :H01L 29/15
(31) Priority Document No :61/243,502
(32) Priority Date :17/09/2009
(33) Name of priority country :U.S.A.
(86) International Application No :PCT/US2010/049172
Filing Date :16/09/2010
(87) International Publication No :WO 2011/035060
(61) Patent of Addition to Application Number :NA
Filing Date :NA
(62) Divisional to Application Number :NA
Filing Date :NA

(71)**Name of Applicant :**
1)SORAA INC
Address of Applicant :6500 KAISER DRIVE, FREMONT, CALIFORNIA 94555, U.S.A. U.S.A.
(72)**Name of Inventor :**
1)JAMES RARING
2)MATTHEW SCHMIDT
3)CHRISTIANE ELSASS

(57) Abstract :
A low voltage laser device having an active region configured for one or more selected wavelengths of light emis¬sions.

No. of Pages : 61 No. of Claims : 23

(12) PATENT APPLICATION PUBLICATION
(19) INDIA
(22) Date of filing of Application :16/04/2012
(21) Application No.3278/DELNP/2012 A
(43) Publication Date : 23/10/2015

(54) Title of the invention : A TRANSACTION TERMINAL COMPRISING A VIEW SHIELD

(51) International classification :G07F 7/10
(31) Priority Document No :NA
(32) Priority Date :NA
(33) Name of priority country :NA
(86) International Application No :PCT/EP2009/063620
Filing Date :16/10/2009
(87) International Publication No :WO 2011/044952
(61) Patent of Addition to Application Number :NA
Filing Date :NA
(62) Divisional to Application Number :NA
Filing Date :NA

(71)**Name of Applicant :**
1)DRESSER WAYNE AB
Address of Applicant :BOX 30049, S-200 61 MALMO SWEDEN. Sweden
(72)**Name of Inventor :**
1)BIRKLER ANNIKA
2)HELGESSON HANNA
3)LARSSON BENGT I.
4)BURNETT KEVIN
5)DE LA PORT PAUL
6)NEGLEY SCOTT
7)THOMAS NEIL

(57) Abstract :
According to the inventive concept, there is provided a transaction terminal comprising: a display arranged to present information to a user of the terminal, a keypad which is separate from the display and arranged to receive input from the user, and a view shield. The view shield is arranged to prevent a view of at least a part of the keypad in a first direction, and allow a view through the view shield of at least a part of the display in a second direction, wherein the second direction is different from the first direction.

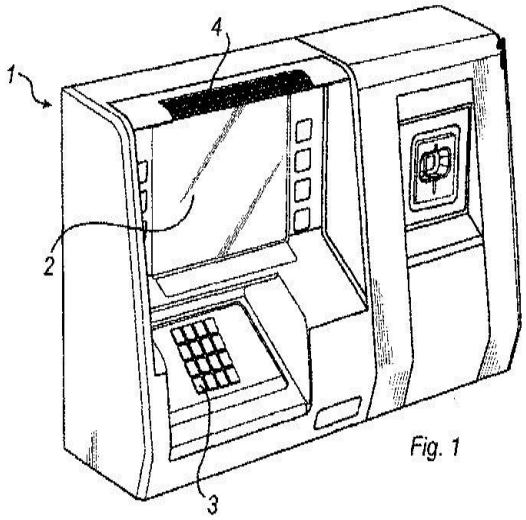

Fig. 1

No. of Pages : 22 No. of Claims : 13

(12) PATENT APPLICATION PUBLICATION
(19) INDIA
(22) Date of filing of Application :18/04/2012
(21) Application No.3373/DELNP/2012 A
(43) Publication Date : 23/10/2015

(54) Title of the invention : AN ELECTRICALLY HEATED SMOKING SYSTEM WITH INTERNAL OR EXTERNAL HEATER

(51) International classification :A24F 47/00
(31) Priority Document No :09252687.0
(32) Priority Date :27/11/2009
(33) Name of priority country :EPO
(86) International Application No :PCT/EP2010/007178
Filing Date :26/11/2010
(87) International Publication No :WO 2011/063970
(61) Patent of Addition to Application Number :NA
Filing Date :NA
(62) Divisional to Application Number :NA
Filing Date :NA

(71)**Name of Applicant :**
1)PHILIP MORRIS PRODUCTS S.A.
Address of Applicant :QUAI JEANRENAUD 3, CH-2000 NEUCHATEL (CH) Switzerland
(72)**Name of Inventor :**
1)GREIM, OLIVIER
2)PLOJOUX, JULIEN
3)RUSCIO, DANI
4)ZUBER, GERARD

(57) Abstract :
There is provided an electrically heated smoking system (103, 203) for receiving an aerosol-forming substrate (105, 205). The system comprises a heater for heating the substrate to form the aerosol, and the heater comprises a heating element (113, 213,214). The electrically heated smoking system (103, 203) and the heating element (113, 213, 214) are arranged such that, when the aerosol-forming substrate (105, 205) is received in the electrically heated smoking system, the heating element (113, 213, 214) extends a distance only partially along the length of the aerosol forming-substrate, and the heating element is positioned towards the downstream end of the aerosol-forming substrate.

Figure 1

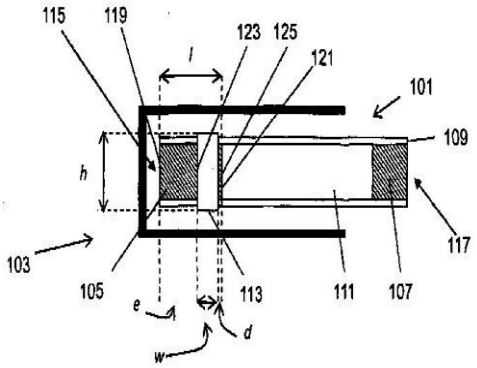

No. of Pages : 26 No. of Claims : 14

(12) PATENT APPLICATION PUBLICATION
(19) INDIA
(22) Date of filing of Application :18/04/2012
(21) Application No.3374/DELNP/2012 A
(43) Publication Date : 23/10/2015

(54) Title of the invention : AN ELECTRICALLY HEATED SMOKING SYSTEM WITH IMPROVED HEATER

(51) International classification :A24F 47/00
(31) Priority Document No :09252501.3
(32) Priority Date :29/10/2009
(33) Name of priority country :EPO
(86) International Application No :PCT/EP2010/006598
Filing Date :28/10/2010
(87) International Publication No :WO 2011/050964
(61) Patent of Addition to Application Number :NA
Filing Date :NA
(62) Divisional to Application Number :NA
Filing Date :NA

(71)**Name of Applicant :**
1)PHILIP MORRIS PRODUCTS S.A.
Address of Applicant :QUAI JEANRENAUD 3, CH-2000 NEUCHATEL (CH) Switzerland
(72)**Name of Inventor :**
1)GREIM, OLIVIER
2)PLOJOUX, JULIEN
3)RUSCIO, DANI

(57) Abstract :
There is provided an electrically heated smoking system for receiving an aerosol-forming substrate. The system comprises at least one heater for heating the aerosol-forming substrate to form the aerosol, and a power supply for supplying power to the at least one heater. The at least one heater comprises one or more electrically conductive tracks (103, 203, 303, 403, 503) on an electrically insulating substrate (101, 201, 301, 401, 501). In one arrangement, the one or more electrically conductive tracks (103, 203, 303, 403, 503) have temperature coefficient of resistance characteristics such that the one or more electrically conductive tracks can act as resistive heaters and as a temperature sensor. In another arrangement, the electrically heated smoking system further comprises a thermally insulating material (507) for insulating the at least one heater from the outside of the electrically heated smoking system.

Figure 4

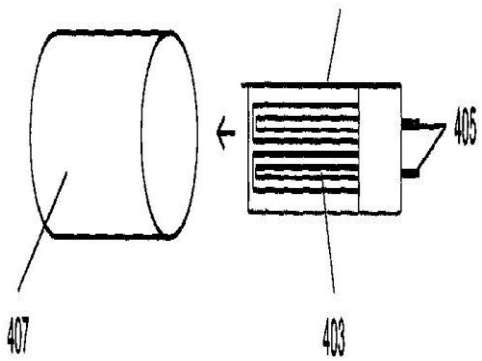

No. of Pages : 24 No. of Claims : 15

(12) PATENT APPLICATION PUBLICATION
(19) INDIA
(22) Date of filing of Application :16/04/2012
(21) Application No.3290/DELNP/2012 A
(43) Publication Date : 23/10/2015

(54) Title of the invention : SALTS OF SUNITINIB

(51) International classification :C07D 403/06
(31) Priority Document No :NA
(32) Priority Date :NA
(33) Name of priority country :NA
(86) International Application No :PCT/IB2010/054196
Filing Date :16/09/2010
(87) International Publication No :WO 2011/033472
(61) Patent of Addition to Application Number :NA
Filing Date :NA
(62) Divisional to Application Number :NA
Filing Date :NA

(71)**Name of Applicant :**
1)RANBAXY LABORATORIES LIMITED
Address of Applicant :12TH FLOOR, DEVIKA TOWER, 6, NEHRU PLACE, NEW DELHI-110019, INDIA. Delhi India
(72)**Name of Inventor :**
1)SUDHIR SINGH SANWAL
2)SARIDI MADHAVA DILEEP KUMAR
3)SWARGAM SATHYANARAYANA
4)RAJESH KUMAR THAPER
5)MOHAN PRASAD

(57) Abstract :
The present invention relates to salts of sunitinib and their preparation.

No. of Pages : 22 No. of Claims : 20

(12) PATENT APPLICATION PUBLICATION
(19) INDIA
(22) Date of filing of Application :16/04/2012
(21) Application No.3291/DELNP/2012 A
(43) Publication Date : 23/10/2015

(54) Title of the invention : METHOD FOR OPERATING A STRINGER AND STRINGER

(51) International classification :G01N
(31) Priority Document No :09011798.7
(32) Priority Date :16/09/2009
(33) Name of priority country :EPO
(86) International Application No :PCT/IB2010/054147
Filing Date :14/09/2010
(87) International Publication No : NA
(61) Patent of Addition to Application Number :NA
Filing Date :NA
(62) Divisional to Application Number :NA
Filing Date :NA

(71)**Name of Applicant :**
1)3S INDUSTRIES AG
Address of Applicant :Schachenweg 24 CH-3250 Lyss Switzerland
(72)**Name of Inventor :**
1)SCHULTIS Martin
2)HIRZLER Bernd

(57) Abstract :
The invention relates to a method for operating a stringer wherein solar cells are connected in series with each other by means of solder ribbon cutoffs. The solder ribbon cut-offs being cut off a continuous solder ribbon strip. The method comprising the steps of monitoring depletion of the momentarily employed continuous solder ribbon strip by means of a monitoring unit detecting by means of the monitoring unit when the end of the momentarily employed continuous solder ribbon strip approaches entering a new roll with a new continuous solder ribbon strip connecting the end of the momentarily employed continuous solder ribbon strip to the new continuous solder ribbon strip moving the composed continuous solder ribbon strip to a cutting station cutting the composed continuous solder ribbon strip into solder ribbon cut-offs in the cutting station and removing the solder ribbon cut-off that comprises the connection point.

No. of Pages : 13 No. of Claims : 13

(12) PATENT APPLICATION PUBLICATION
(21) Application No.3293/DELNP/2012 A
(19) INDIA
(22) Date of filing of Application :17/04/2012
(43) Publication Date : 23/10/2015

(54) Title of the invention : VESSEL AND METHOD FOR TRANSPORTING AND HOISTING THE OFFSHORE WIND TURBINE GENERATOR SYSTEM

(51) International classification :B63B 27/00
(31) Priority Document No :200910241617.1
(32) Priority Date :27/11/2009
(33) Name of priority country :China
(86) International Application No :PCT/CN2010/001683
Filing Date :25/10/2010
(87) International Publication No :WO 2011/063596
(61) Patent of Addition to Application Number :NA
Filing Date :NA
(62) Divisional to Application Number :NA
Filing Date :NA

(71)**Name of Applicant :**
1)SINOVEL WIND GROUP CO., LTD.
Address of Applicant :19F, CULTURE BUIDLING, NO 59, ZHONGGUANCUN STREET, HAIDIAN DISTRICT, BEIJING 100872, CHINA China
(72)**Name of Inventor :**
1)LI, YAN
2)JIN, BAONIAN
3)ZHANG, QIN
4)LU, JIZHUANG

(57) Abstract :
A vessel for transporting and hoisting offshore wind turbine comprises a hull (7), a plurality of fixing brackets (1), first sliding rails (31), second sliding rails (32), a buffer device (5), rotary cranes (6) and winch devices(4). A U-shaped opening is provided at the stern of the hull (7) for a wind turbine (8) to pass through. The fixing brackets (1) are arranged in two rows in parallel, the bottom of which are fixed onto the deck in the hull. The first sliding rails (31) are installed on the top of each row of the fixing brackets (1). The second sliding rails (32) are installed on the inner side of the two rows of the fixing brackets (1) on the deck in the hull. The second sliding rails (32) are in parallel with the first sliding rails (31). A hanging beam (2) slidably matched with the first sliding rails (31) is installed on the body of the wind turbine (8). The buffer device (5) is fixed to the bottom of the wind turbine (8), and is slidably matched with the second sliding rails (32). The rotary cranes (6) are fixed on the top of two sides of the U-shaped opening. The winch devices (4) is installed on the stern of the hull. An offshore wind turbine transporting and hoisting method using a vessel for transporting and hoisting offshore wind turbine is also disclosed. The invention enables the wind turbine to be integrally transported and hoisted. Figure 1 is the representative figure.

No. of Pages : 18 No. of Claims : 11

(12) PATENT APPLICATION PUBLICATION
(19) INDIA
(22) Date of filing of Application :18/04/2012
(21) Application No.3385/DELNP/2012 A
(43) Publication Date : 23/10/2015

(54) Title of the invention : SINGLE LAYER PLASTIC TEST SAMPLE CULTURE BOTTLE

(51) International classification :C08F
(31) Priority Document No :61/278,159
(32) Priority Date :02/10/2009
(33) Name of priority country :U.S.A.
(86) International Application No :PCT/US2010/050797
Filing Date :30/09/2010
(87) International Publication No : NA
(61) Patent of Addition to Application Number :NA
Filing Date :NA
(62) Divisional to Application Number :NA
Filing Date :NA

(71)**Name of Applicant :**
1)BIOMERIEUX INC.
Address of Applicant :Patent Department 100 Rodolphe Street Durham NC 27712 United States of America. U.S.A.
(72)**Name of Inventor :**
1)ROBINSON Ronnie J.
2)RONSICK Christopher S.
3)WILSON Mark Steven

(57) Abstract :
A bottle for culturing a test sample e.g. blood includes a plastic vessel made from a single layer of plastic material. The bottle features a glass barrier coating applied to the bottle such as a silica or glass coating. An alternative embodiment features a single layer plastic bottle and a gas barrier adhesive label covering the cylindrical side wall of the bottle. In another embodiment the gas barrier is in the form of a plastic shrink-wrap partially or alternatively completely enveloping the plastic vessel. Kits comprising two or more of such bottles and methods of manufacturing the bottles are also disclosed.

No. of Pages : 33 No. of Claims : 58

(12) PATENT APPLICATION PUBLICATION
(21) Application No.1064/DEL/2014 A
(19) INDIA
(22) Date of filing of Application :18/04/2014
(43) Publication Date : 23/10/2015

(54) Title of the invention : DROP AND TILT METHOD OF TOOL POSITIONING FOR 5-AXIS MACHINING OF TRIANGULATED SURFACES

(51) International classification :G06F17/50
(31) Priority Document No :NA
(32) Priority Date :NA
(33) Name of priority country :NA
(86) International Application No :NA
Filing Date :NA
(87) International Publication No : NA
(61) Patent of Addition to Application Number :NA
Filing Date :NA
(62) Divisional to Application Number :NA
Filing Date :NA

(71)**Name of Applicant :**
1)THAPAR UNIVERSITY
Address of Applicant :Thapar University P.O Box 32, Patiala-147004, India. Punjab India
(72)**Name of Inventor :**
1)DUVEDI, Ravinder Kumar
2)Dr. BEDI, Sanjeev
3)Dr. MAAN, Stephan
4)Dr. BATISH, Ajay

(57) Abstract :
ABSTRACT The present invention defines a unique concept of multi-point machining of triangulated surfaces using toroidal cutter. The concept presented in this invention assures the cutter contact with machined surface at least two points for five-axis machining of complex surfaces. The gouge free tool contact at two points on part surface assures the maximum tilt of cutter for five axis machining. The mathematical algorithm has been implemented in two phases namely: three-axis tool drop along predetermined direction to determine the first point of contact and the second phase determines the maximum tool rotation about a pseudo axis so that the cutting tool touches the machined surface at a second point as well. This algorithm has been used to find the NC toolpath data for two different types of convex and concave STL surfaces and these parts have been successfully machined using the NC toolpath data generated from the developed 5-axis machining algorithm for STL surfaces on DMU-80P five-axis machine.

No. of Pages : 31 No. of Claims : 10

(12) PATENT APPLICATION PUBLICATION
(19) INDIA
(22) Date of filing of Application :16/04/2012
(21) Application No.3288/DELNP/2012 A
(43) Publication Date : 23/10/2015

(54) Title of the invention : METHOD AND APPARATUS FOR PROVIDING A SOLAR CELL WITH A SOLDER RIBBON

(51) International classification :G01N
(31) Priority Document No :09011796.1
(32) Priority Date :16/09/2009
(33) Name of priority country :EUROPEAN UNION
(86) International Application No :PCT/IB2010/054146
Filing Date :14/09/2010
(87) International Publication No : NA
(61) Patent of Addition to Application Number :NA
Filing Date :NA
(62) Divisional to Application Number :NA
Filing Date :NA

(71)**Name of Applicant :**
1)3S INDUSTRIES AG
Address of Applicant :Schachenweg 24 CH-3250 Lyss Switzerland
(72)**Name of Inventor :**
1)RISCH Wolfgang
2)Z–NNCHEN Jrg
3)KAMASINSKI Karol

(57) Abstract :
The invention relates to a method for providing a solar cell with a solder ribbon. The solar cell having at least one bus bar wherein flux is applied by means of at least one automatically controlled spray head and the solder ribbon is connected to a bus bar by means of at least one automatically controlled soldering unit and wherein the flux is only applied to those locations of the solder ribbon that are to be connected to the bus bar and/or that the flux is only applied to those locations of the bus bars that is to be connected to the solder ribbon. The invention further relates to an apparatus for providing a solar cell that has at least one bus bar with a solder ribbon according to such a method.

No. of Pages : 14 No. of Claims : 12

(12) PATENT APPLICATION PUBLICATION
(19) INDIA
(22) Date of filing of Application :16/04/2012
(21) Application No.3289/DELNP/2012 A
(43) Publication Date : 23/10/2015

(54) Title of the invention : APPARATUS FOR MANUFACTURING SOLAR CELL MATRICES AND METHOD FOR OPERATING SUCH APPARATUS

(51) International classification :G01N
(31) Priority Document No :09011797.9
(32) Priority Date :16/09/2009
(33) Name of priority country :EPO
(86) International Application No :PCT/IB2010/054159
Filing Date :15/09/2010
(87) International Publication No : NA
(61) Patent of Addition to Application Number :NA
Filing Date :NA
(62) Divisional to Application Number :NA
Filing Date :NA

(71)**Name of Applicant :**
1)3S INDUSTRIES AG
Address of Applicant :Schachenweg 24 CH-3250 Lyss Switzerland
(72)**Name of Inventor :**
1)RISCH Wolfgang
2)HIRZLER Bernd
3)SCHULTIS Martin
4)KNOLL Gerhard

(57) Abstract :
The invention relates to an apparatus for manufacturing solar cell matrices that comprises several stringers for forming strings from solar cells a lay-up and interconnection station for arranging and interconnecting the strings to form a solar cell matrix and a transportation system for transferring the strings from the stringers to the lay-up and interconnection station wherein the stringers are arranged perpendicular to the direction of flow of the transportation system or in an acute angle to an axis perpendicular to the direction of flow of the transportation system. The invention further relates to a method for operating such an apparatus wherein the several stringers are controlled such that collision between different strings is avoided in the transportation system.

No. of Pages : 13 No. of Claims : 17

(12) PATENT APPLICATION PUBLICATION
(21) Application No.3381/DELNP/2012 A
(19) INDIA
(22) Date of filing of Application :18/04/2012
(43) Publication Date : 23/10/2015

(54) Title of the invention : METHOD AND DEVICE FOR SLAVING THE ACTIVATION OF A SET OF INFRARED EMITTERS OF A SENSOR OF VENOUS NETWORKS TO THE PRESENCE OF A LIVING BODY

(51) International classification :G01N
(31) Priority Document No :09/57479
(32) Priority Date :26/10/2009
(33) Name of priority country :France
(86) International Application No :PCT/EP2010/066071
Filing Date :25/10/2010
(87) International Publication No : NA
(61) Patent of Addition to Application Number :NA
Filing Date :NA
(62) Divisional to Application Number :NA
Filing Date :NA

(71)**Name of Applicant :**
1)MORPHO
Address of Applicant :27 rue Leblanc 75015 Paris France. France
(72)**Name of Inventor :**
1)MORIN Aurlie
2)DARBOIS Matthieu
3)GOUDON Olivier
4)BALZAC Yannick

(57) Abstract :
The present invention relates to a method for slaving the activation of a set of infrared emitters of a sensor of venous networks to the presence of a living body between this set and an image acquisition means of the sensor. The method is characterized in that each infrared emitter (E) is activated if the presence of a part of the living body (CV) is detected by at least one presence detector (DP) which is associated therewith and each infrared emitter (E) is deactivated as long as the presence of a part of the living body (CV) is not detected.

No. of Pages : 20 No. of Claims : 17

(12) PATENT APPLICATION PUBLICATION
(21) Application No.3282/DELNP/2012 A
(19) INDIA
(22) Date of filing of Application :16/04/2012
(43) Publication Date : 23/10/2015

(54) Title of the invention : RIDING-TYPE AGRICULTURAL MACHINE

(51) International classification :B62D 21/18
(31) Priority Document No :2009-256857
(32) Priority Date :10/11/2009
(33) Name of priority country :Japan
(86) International Application No :PCT/JP2010/069948
Filing Date :09/11/2010
(87) International Publication No :WO 2011/058974
(61) Patent of Addition to Application Number :NA
Filing Date :NA
(62) Divisional to Application Number :NA
Filing Date :NA

(71)**Name of Applicant :**
1)YANMAR CO., LTD.
Address of Applicant :1-9, TSURUNOCHO, KITA-KU, OSAKA-SHI, OSAKA 5308311, JAPAN Japan
(72)**Name of Inventor :**
1)KURODA TOMOYUKI

(57) Abstract :
A rice planting machine includes a running vehicle body. The running vehicle body includes a chassis. The chassis includes side frames 9 and 10, a mid-frame 11, a front frame 12, and a rear frame 14. A transmission case 27 and a rear axle case 34 also function as strength members of the running vehicle body. The transmission case 27 and the rear axle case 34 are connected to each other through a lower connecting body 36. An engine 26 is supported by an upwardly opened U-shaped engine support 55. The engine support 55 is fixed to front side frames 9. The engine 26 is disposed in a state where the engine 26 downwardly sinks into the front side frames 9. Therefore, a barycenter of the running vehicle body 1 is lowered and stability is high.

Fig5

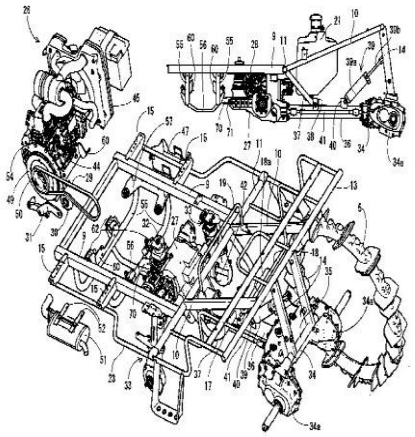

No. of Pages : 69 No. of Claims : 11

(12) PATENT APPLICATION PUBLICATION
(19) INDIA
(22) Date of filing of Application :16/04/2012
(21) Application No.3283/DELNP/2012 A
(43) Publication Date : 23/10/2015

(54) Title of the invention : RIDING-TYPE AGRICULTURAL MACHINE

(51) International classification :A01C 11/02
(31) Priority Document No :2009-275384
(32) Priority Date :03/12/2009
(33) Name of priority country :Japan
(86) International Application No :PCT/JP2010/071735
Filing Date :03/12/2010
(87) International Publication No :WO 2011/068220
(61) Patent of Addition to Application Number :NA
Filing Date :NA
(62) Divisional to Application Number :NA
Filing Date :NA

(71)**Name of Applicant :**
1)YANMAR CO., LTD
Address of Applicant :1-9, TSURUNOCHO, KITA-KU, OSAKA-SHI, OSAKA 5308311, JAPAN Japan
(72)**Name of Inventor :**
1)KATOU YUUICHI
2)DOI KUNIO
3)TAKEYAMA TOMOHIRO

(57) Abstract :
In a mid-mount type riding-type rice planting machine in which an engine is disposed in a rear portion of a running body, a structure of the running body is simplified, and a barycenter thereof is lowered. The running body 1 includes the engine 18, a running transmission case 19, and a rear axle case 25. The running transmission case 19 and the rear axle case 25 are connected to each other through a joint member 32. The engine 18 is supported from front and behind by a front bracket 48 provided on the joint member 32 and a rear bracket 49 provided on the rear axle case 25. The joint member 32 is fixed to a lower portion of the running transmission case 19. Hence, the engine 18 can be lowered in height, and the barycenter of the running body can be lowered.

Fig1

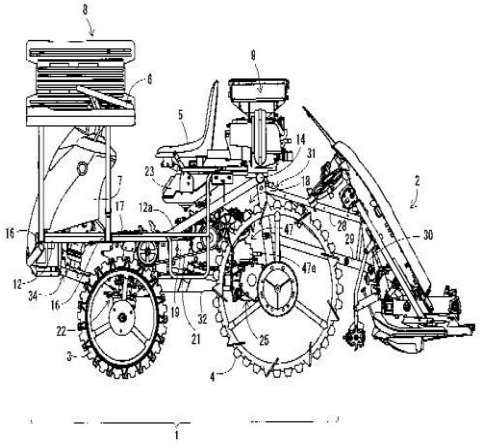

No. of Pages : 81 No. of Claims : 6

(12) PATENT APPLICATION PUBLICATION
(19) INDIA
(22) Date of filing of Application :16/04/2012
(21) Application No.3284/DELNP/2012 A
(43) Publication Date : 23/10/2015

(54) Title of the invention : FUEL DISPENSING UNIT FOR REFUELLING VEHICLES AND A METHOD FOR ASSEMBLING SUCH A FUEL DISPENSING UNIT

(51) International classification :B67D 7/84
(31) Priority Document No :NA
(32) Priority Date :NA
(33) Name of priority country :NA
(86) International Application No :PCT/EP2009/63621
Filing Date :16/10/2009
(87) International Publication No :WO 2011/044953
(61) Patent of Addition to Application Number :NA
Filing Date :NA
(62) Divisional to Application Number :NA
Filing Date :NA

(71)**Name of Applicant :**
1)DRESSER WAYNE AB
Address of Applicant :P.O. BOX 30049, 200 61 MALMO, SWEDEN Sweden
(72)**Name of Inventor :**
1)BIRKLER ANNIKA
2)BURNETT KEVIN
3)DE LA PORT PAUL
4)HELGESSON HANNA
5)LARSSON BENGT I.
6)NEGLEY SCOTT
7)THOMAS NEIL

(57) Abstract :
The invention relates to a fuel dispensing unit (7) for refueling vehicles, comprising a base module (1) containing dispensing hydraulics, an electronics module (2) for controlling said fuel dispensing unit (7) and having a user interface (8), a nozzle module (3) for holding at least one nozzle (10) for dispensing fuel from a fuel reservoir by means of said dispensing hydraulics, a column module (4), and a top module (5). The electronics module (2) is arranged above of said base module (1), said nozzle module (3) is arranged above said base module (1), said column module (4) is arranged above said nozzle module (3) and said top module (5) is arranged above said column module (4). The invention also relates to a method for assembling such a fuel dispensing unit (7).

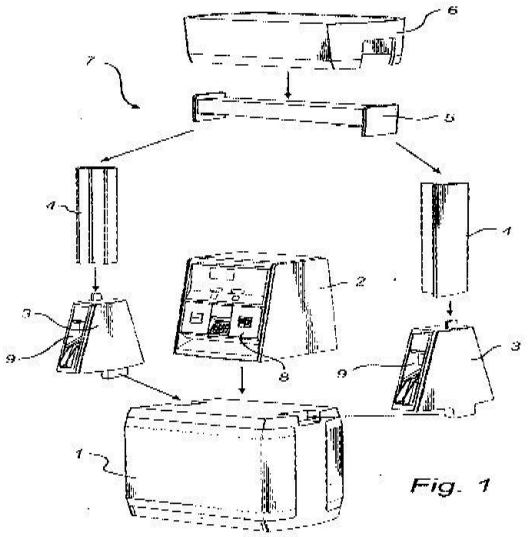

Fig. 1

No. of Pages : 22 No. of Claims : 18

(12) PATENT APPLICATION PUBLICATION
(19) INDIA
(22) Date of filing of Application :18/04/2012
(21) Application No.3376/DELNP/2012 A
(43) Publication Date : 23/10/2015

(54) Title of the invention : REDUCING ALUMINOSILICATE SCALE IN THE BAYER PROCESS

(51) International classification :C01F 7/47
(31) Priority Document No :12/567,116
(32) Priority Date :25/09/2009
(33) Name of priority country :U.S.A.
(86) International Application No :PCT/US2010/049555
Filing Date :21/09/2010
(87) International Publication No :WO 2011/037873
(61) Patent of Addition to Application Number :NA
Filing Date :NA
(62) Divisional to Application Number :NA
Filing Date :NA

(71)**Name of Applicant :**
1)NALCO COMPANY
Address of Applicant :1601 W. DIEHL ROAD, NAPERVILLE, ILLINOIS 60563-1198 UNITED STATES OF AMERICA U.S.A.
(72)**Name of Inventor :**
1)LA, TIMOTHY
2)CUI, JI
3)KILDEA, JOHN D.
4)SLINKMAN, DAVID H.

(57) Abstract :
The invention provides a method of inhibiting the accumulation of DSP scale in the liquor circuit of Bayer process equipment. The method includes adding one or more particular silane based small molecules to the liquor fluid circuit. These scale inhibitors reduce DSP scale formation and thereby increase fluid throughput, increase the amount of time Bayer process equipment can be operational and reduce the need for expensive and dangerous acid washes of Bayer process equipment. As a result, the invention provides a significant reduction in the total cost of operating a Bayer process.

No. of Pages : 26 No. of Claims : 10

(12) PATENT APPLICATION PUBLICATION
(19) INDIA
(22) Date of filing of Application :18/04/2012
(21) Application No.3377/DELNP/2012 A
(43) Publication Date : 23/10/2015

(54) Title of the invention : SOLID PHARMACEUTICAL COMPOSITIONS CONTAINING AN INTEGRASE INHIBITOR

(51) International classification :A01N 43/78
(31) Priority Document No :61/254,869
(32) Priority Date :26/10/2009
(33) Name of priority country :U.S.A.
(86) International Application No :PCT/US2010/053507
Filing Date :21/10/2010
(87) International Publication No :WO 2011/053504
(61) Patent of Addition to Application Number :NA
Filing Date :NA
(62) Divisional to Application Number :NA
Filing Date :NA

(71)**Name of Applicant :**
1)MERCK SHARP & DOHME CORP.
Address of Applicant :126 EAST LINCOLN AVENUE, RAHWAY, NEW JERSEY 07065-0907, UNITED STATES OF AMERICA U.S.A.
(72)**Name of Inventor :**
1)MAHJOUR, MAJID
2)LI, FENG
3)MA, DECHENG
4)SOTTHIVIRAT, SUTTHILUG

(57) Abstract :
Compressed tablets for oral administration containing raltegravir in the form of a pharmaceutically acceptable salt are described. The tablets comprise: (A) an intragranular component comprising (i) an effective amount of an alkali metal salt of raltegravir, (ii) optionally a first superdisintegrant, and (iii) a binder; and (B) an extragranular component comprising (i) a second superdisintegrant, (ii) a filler, and (iii) a lubricant. Methods for preparing the tablets and the use of the tablets, optionally in combination with other anti-HIV agents, for the inhibition of HIV integrase, for the treatment or prophylaxis of HIV infection, or for the treatment, delay in the onset, or prophylaxis of AIDS are also described.

No. of Pages : 40 No. of Claims : 27

(12) PATENT APPLICATION PUBLICATION
(19) INDIA
(22) Date of filing of Application :16/04/2014
(21) Application No.1050/DEL/2014 A
(43) Publication Date : 23/10/2015

(54) Title of the invention : COMPOSITIONS AND VACCINES FOR PREVENTION OF MYCOBACTERIAL INFECTIONS

(51) International classification :A61K39/04
(31) Priority Document No :NA
(32) Priority Date :NA
(33) Name of priority country :NA
(86) International Application No :NA
Filing Date :NA
(87) International Publication No : NA
(61) Patent of Addition to Application Number :NA
Filing Date :NA
(62) Divisional to Application Number :NA
Filing Date :NA

(71)**Name of Applicant :**
1)Department of Biotechnology
Address of Applicant :Block 2, 7th Floor, C.G.O. Complex, Lodi Road, New Delhi 110003, India Delhi India
2)PGIMER
3)National Jalma Institute For Leprosy And Other Mycobacterial Diseases
4)Council of Scientific & Industrial Research (CSIR)
(72)**Name of Inventor :**
1)Indu Verma
2)Javaid Ahmad Sheikh
3)Pushpa Gupta
4)U. D. Gupta
5)Dheeraj Gupta

(57) Abstract :
ABSTRACT Title.: Compositions and vaccines for prevention of mycobacterial infections A composition comprising at least one promiscuous peptide of the RD1 region of the Mtb and at least one promiscuous peptide of the RD8 region of the Mtb. The composition may further comprise promiscuous peptides of at least one of RD7 and RD9 regions of Mtb.

No. of Pages : 43 No. of Claims : 20

(12) PATENT APPLICATION PUBLICATION
(21) Application No.3202/DELNP/2012 A
(19) INDIA
(22) Date of filing of Application :13/04/2012
(43) Publication Date : 23/10/2015

(54) Title of the invention : TURBINE WHEEL HAVING AN AXIAL RETAINING RING THAT LOCKS THE BLADES RELATIVE TO A DISC

(51) International classification :F01D 5/30
(31) Priority Document No :0957150
(32) Priority Date :13/10/2009
(33) Name of priority country :France
(86) International Application No :PCT/FR2010/052151
Filing Date :12/10/2010
(87) International Publication No :WO 2011/045520
(61) Patent of Addition to Application Number :NA
Filing Date :NA
(62) Divisional to Application Number :NA
Filing Date :NA

(71)**Name of Applicant :**
1)TURBOMECA
Address of Applicant :BP 2, F-64510 BORDES, FRANCE France
(72)**Name of Inventor :**
1)DAMIEN CHAUVEAU
2)JEAN-LUC SAHORES

(57) Abstract :
The invention relates to a turbine wheel (10) having an axis of rotation (X) and comprising: a disk (12) having a periphery and a side face (12a); a plurality of blades (14) assembled on the disk, each blade having a blade root (20) and a first hook (22) oriented radially and defining a first groove (24) that opens radially towards the axis of rotation of the turbine wheel; and the disk including a series of second hooks (26) oriented radially and defining a second groove (28) that opens radially towards the axis of rotation of the turbine wheel. The invention is characterized by the fact an axial retaining ring (30) for placing in the first and second grooves includes a tab (32) for placing between two adjacent blade roots in such a manner as to limit movements of the ring in azimuth.

No. of Pages : 20 No. of Claims : 13

(12) PATENT APPLICATION PUBLICATION
(21) Application No.3203/DELNP/2012 A
(19) INDIA
(22) Date of filing of Application :13/04/2012
(43) Publication Date : 23/10/2015

(54) Title of the invention : POLYMERIC VIOLET ANTHRAQUINONE COLORANT COMPOSITIONS AND METHODS FOR PRODUCING THE SAME

(51) International classification :C09B 69/10
(31) Priority Document No :12/624,646
(32) Priority Date :24/11/2009
(33) Name of priority country :U.S.A.
(86) International Application No :PCT/US2010/057150
Filing Date :18/11/2010
(87) International Publication No :WO 2011/066161
(61) Patent of Addition to Application Number :NA
Filing Date :NA
(62) Divisional to Application Number :NA
Filing Date :NA

(71)**Name of Applicant :**
1)MILLIKEN & COMPANY
Address of Applicant :920 MILLIKEN ROAD, M-495 SPARTANBURG, SOUTH CAROLINA 29303, UNITED STATES OF AMERICA U.S.A.
(72)**Name of Inventor :**
1)XIAOYONG MICHAEL HONG
2)ROBERT L. MAHAFFEY

(57) Abstract :
This invention relates to polymeric violet anthraquinone colorants having at least one poly(oxyalkylene) chain attached to an anthraquinone structure. Such colorants exhibit bright violet shade, excellent compatibility with organic media or aqueous systems, good lightfastness, and excellent thermal stability. The water soluble poly(oxyalkylene) substituted polymeric violet anthraquinone colorants also possess high water solubility, high color strength, non-staining properties, and high pH stability. The processes and methods for making such polymeric violet anthraquinone colorants and their use for coloring consumer products are also provided.

No. of Pages : 51 No. of Claims : 28

(12) PATENT APPLICATION PUBLICATION
(19) INDIA
(22) Date of filing of Application :19/04/2012
(21) Application No.3394/DELNP/2012 A
(43) Publication Date : 23/10/2015

(54) Title of the invention : METERING SYSTEM, DENSE PHASE CONVEYING SYSTEM AND METHOD FOR SUPPLYING BULK MATERIAL IN POWDER FORM

(51) International classification :A61M
(31) Priority Document No :10 2009 048 931.2
(32) Priority Date :10/10/2009
(33) Name of priority country :Germany
(86) International Application No :PCT/EP2010/006149
Filing Date :08/10/2010
(87) International Publication No :WO 2011/042193
(61) Patent of Addition to Application Number :NA
Filing Date :NA
(62) Divisional to Application Number :NA
Filing Date :NA

(71)**Name of Applicant :**
1)LINDE AG
Address of Applicant :KLOSTERHOFSTRASSE 1,80331 MUNCHEN, GERMANY Germany
(72)**Name of Inventor :**
1)HORST KRETSCHMER
2)JORG KLEEBERG
3)NA
4)DIETMAR RUGER
5)OLAF SCHULZE
6)CHRISTIAN EICHHORN

(57) Abstract :
The present invention relates to a metering system for the steady, continuous, dosed supply of a bulk material in powder form made of light, polydisperse particles from a supply device (B, SG) into a plurality of conveying tubes (FR1, FR2, FR3) to a consumer arranged downstream. The metering system comprises at least two metering containers (DB1, DB2, DB3) each having a delivery device (AE2/1, AE2/2, AE2/3), the delivery device (AE2/1, AE2/2, AE2/3) for each of the conveying tubes (FR1, FR2, FR3) comprising a dust flow regulation device (FI1/1, FI2/1, FI3/2), which is assigned thereto and opens therein, and a mass flow measuring probe (FIC1, FIC2, FIC3) being arranged on each of the conveying tubes (FR1, FR2, FR3), which is coupled to the dust flow regulation device (FI1/1 to FI3/2) which opens into the corresponding conveying tube (FR1, FR2, FR3). Furthermore, the metering system has a pressure regulation device, which is coupled to the pressure measuring devices (PI1/1, PI1/2, PI1/3) arranged on the delivery devices (AE2/1, AE2/2, AE2/3), and which controls a metering container pressure (PIS2/1, PIS2/2, PIS2/3) at least as a function of a metering container fill level (LIS1, LIS2, LIS3). A pump device (V) can be coupled to each of the metering containers (DB1, DB2, DB3), which provides a pressure (PIS2/1, PIS2/2, PIS2/3) in the metering container (DB1, DB2, DB3), which is less than a pressure in the supply device (B, SG). Furthermore, the invention discloses a dense phase conveying system, which comprises the metering system and a method for the steady, continuous, dosed supply of a bulk material in powder form made of light, polydisperse particles.

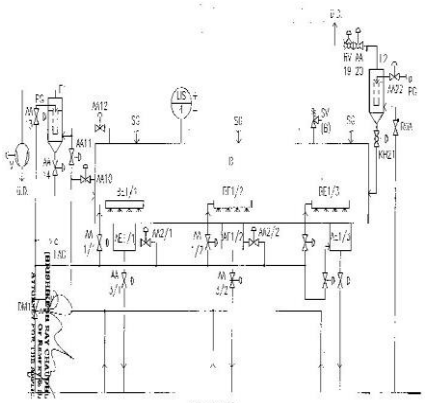

Figure 1-1

No. of Pages : 31 No. of Claims : 13

(12) PATENT APPLICATION PUBLICATION
(19) INDIA
(22) Date of filing of Application :17/04/2012
(21) Application No.3297/DELNP/2012 A
(43) Publication Date : 23/10/2015

(54) Title of the invention : SALTS, SOLVATES AND PHARMACEUTICAL COMPOSITIONS OF MACROCYCLIC GHRELIN RECEPTOR AGONISTS AND METHODS OF USING THE SAME

(51) International classification :A61K 31/352
(31) Priority Document No :61/247,362
(32) Priority Date :30/09/2009
(33) Name of priority country :U.S.A.
(86) International Application No :PCT/US2010/050661
Filing Date :29/09/2010
(87) International Publication No :WO 2011/041369
(61) Patent of Addition to Application Number :NA
Filing Date :NA
(62) Divisional to Application Number :NA
Filing Date :NA

(71)**Name of Applicant :**
1)TRANZYME PHARMA, INC,
Address of Applicant :5001 SOUTH MIAMI BOULEVARD, SUITE 300, DURHAM, NC 27702, UNITED STATES OF AMERICA U.S.A.
(72)**Name of Inventor :**
1)HAMID R. HOVEYDA
2)MARTIN VEZINA
3)ERIC FOURNIER
4)RENE GAGNON
5)PATRICK BHERER

(57) Abstract :
The present invention provides novel salts and solvates of cyclic compounds that bind in niicl/or are functional agonists of ihc ghrclin (growth hor-mone secrelagogiic) receptor. The invention also relates In polymorphs of these salts and solvates, phanitaeeiitical compositions continuing these salts or solvates, and meth¬ods ol using the pharmaceutical compositions. These pharmaceutical compositions are useful as therapeutics lor a range of disease indications, in particular, for treatment and prevention of gastrointestinal disorders including, hut not limited to, postoperative ileus, gastroparesis, includ¬ing diahetic and postsurgical gastroparesis, opioid bowel dysfunction, chronic intestinal pseudo-obstruction, short bowel syndrome, functional gastrointestinal disorders and gastrointestinal dysmolilily, such as that occurring in con-junction willi other disease states, in critical care situa-tions or as a result of treatment with pharmaceutical agents. Additionally, the pharmaceutical compositions have application to the treatment and prevention of metabolic and/or endocrine disorders, cardiovascular dis-orders, central nervous system disorders, bone disorders, inflammatory disorders, hyperproliferative disorders, dis-orders characterized by apoptosis and genetic disorders.

No. of Pages : 93 No. of Claims : 62

(12) PATENT APPLICATION PUBLICATION
(21) Application No.3298/DELNP/2012 A
(19) INDIA
(22) Date of filing of Application :17/04/2012
(43) Publication Date : 23/10/2015

(54) Title of the invention : SYNERGISTIC HERBICIDAL COMPOSITION CONTAINING FLUROXYPYR AND CYHALOFOP, METAMIFOP OR PROFOXYDIM

(51) International classification :A01N 43/40
(31) Priority Document No :61/255,685
(32) Priority Date :28/10/2009
(33) Name of priority country :U.S.A.
(86) International Application No :PCT/US2010/054248
Filing Date :27/10/2010
(87) International Publication No :WO 2011/056639
(61) Patent of Addition to Application Number :NA
Filing Date :NA
(62) Divisional to Application Number :NA
Filing Date :NA

(71)**Name of Applicant :**
1)DOW AGROSCIENCES LLC
Address of Applicant :9330 ZIONSVILLE ROAD, INDIANAPOLIS, INDIANA 46268 UNITED STATES OF AMERICA U.S.A.
(72)**Name of Inventor :**
1)RICHARD MANN
2)MONTE WEIMER
3)ANDREA MCVEIGH-NELSON

(57) Abstract :
An herbicidal composition containing (a) fluroxypyr and (b) cyhalofop, metamifop or profoxydim provides synergistic control of selected weeds particularly in rice.

No. of Pages : 17 No. of Claims : 13

(12) PATENT APPLICATION PUBLICATION
(19) INDIA
(22) Date of filing of Application :17/04/2012
(21) Application No.3299/DELNP/2012 A
(43) Publication Date : 23/10/2015

(54) Title of the invention : PROCESS FOR THE PREPARATION OF COMPOUNDS USEFUL AS INHIBITORS OF SGLT2

(51) International classification :C07D 409/10
(31) Priority Document No :61/251,378
(32) Priority Date :14/10/2009
(33) Name of priority country :U.S.A.
(86) International Application No :PCT/US2010/052598
Filing Date :14/10/2010
(87) International Publication No :WO 2011/047113
(61) Patent of Addition to Application Number :NA
Filing Date :NA
(62) Divisional to Application Number :NA
Filing Date :NA

(71)**Name of Applicant :**
1)JANSSEN PHARMACEUTICA NV
Address of Applicant :TURNHOUTSEWEG 30, B-2340 BEERSE, BELGIUM Belgium
(72)**Name of Inventor :**
1)VITTORIO FARINA
2)SEBASTIEN FRANCOIS EMMANUEL LEMAIRE
3)IOANNIS N. HOUPIS

(57) Abstract :
The present invention is directed to a novel process for the preparation of compounds having inhibitory activity against sodium-dependent glucose transporter (SGLT) being present in the intestine or kidney.

No. of Pages : 116 No. of Claims : 36

(12) PATENT APPLICATION PUBLICATION
(19) INDIA
(22) Date of filing of Application :19/04/2012
(21) Application No.3391/DELNP/2012 A
(43) Publication Date : 23/10/2015

(54) Title of the invention : BENZOIMIDAZOLE COMPOUNDS AND USES THEREOF

(51) International classification :C07D 413/06
(31) Priority Document No :61/262,263
(32) Priority Date :18/11/2009
(33) Name of priority country :U.S.A.
(86) International Application No :PCT/SE2010/051269
Filing Date :17/11/2010
(87) International Publication No :WO 2011/062550
(61) Patent of Addition to Application Number :NA
Filing Date :NA
(62) Divisional to Application Number :NA
Filing Date :NA

(71)**Name of Applicant :**
1)ASTRAZENECA AB
Address of Applicant :SE-151 85 SODERTALJE, SWEDEN Sweden
(72)**Name of Inventor :**
1)LOUIS DAVID CANTIN
2)XUEHONG LUO
3)MIROSLAW JERZY TOMASZEWSKI

(57) Abstract :
This invention generally relates to substituted benzoimidazole compounds, particularly methyl 2-((2-(2,6-di£luoro-4-(methylcarbamoyl)phenyl)-5-methyl-lH-benzo[d]imidazol-l-yl)methyl)morpholine-4-carboxylate and salts thereof. This invention also relates to pharmaceutical compositions and kits comprising such a compound, uses of such a compound (including, for example, treatment methods and medicament preparations), processes for making such a compound, and intermediates used in such processes.

No. of Pages : 43 No. of Claims : 19

(12) PATENT APPLICATION PUBLICATION
(19) INDIA
(22) Date of filing of Application :19/04/2012
(21) Application No.3392/DELNP/2012 A
(43) Publication Date : 23/10/2015

(54) Title of the invention : APPARATUS AND METHOD FOR PRODUCTION OF METAL ELONGATED PRODUCTS

(51) International classification :B22D 11/14
(31) Priority Document No :10425252.3
(32) Priority Date :26/07/2010
(33) Name of priority country :Italy
(86) International Application No :PCT/EP2011/061325
Filing Date :05/07/2011
(87) International Publication No :WO 2012/013456
(61) Patent of Addition to Application Number :NA
Filing Date :NA
(62) Divisional to Application Number :NA
Filing Date :NA

(71)**Name of Applicant :**
1)SIEMENS VAI METALS TECHNOLOGIES S.R.L.
Address of Applicant :LUIGI POMONI 92, I-21050 MARNATE, ITALY Italy
(72)**Name of Inventor :**
1)UGO ZANELLI
2)EZIO COLOMBO

(57) Abstract :
Apparatus for production of elongated rolled products comprising: -a steel- making station(6) for producing liquid metal having at a first production rate, -a rolling mill (13) having a second production rate -a continuous casting station (11) located between the steelmaking station and the rolling mill (13), the continuous casting station (11) comprising at least two casting lines (21,19), each line being operable to produce elongated intermediate products, wherein: D a first casting line is directly aligned with the rolling mill to feed the rolling mill with casted product, and 0 at least a second casting line not aligned with the rolling mill and not feeding the rolling mill characterised in that the apparatus further comprises: varying means (27) for varying simultaneously the production rate of the first casting line and the production rate of at least the second casting line depending on the difference between the steelmaking station production rate and the rolling mill production rate.

No. of Pages : 15 No. of Claims : 11

(12) PATENT APPLICATION PUBLICATION
(19) INDIA
(22) Date of filing of Application :13/04/2012
(21) Application No.3217/DELNP/2012 A
(43) Publication Date : 23/10/2015

(54) Title of the invention : NOVEL TRICYCLIC PROTEIN KINASE MODULATORS

(51) International classification :A01N 43/14
(31) Priority Document No :61/243,104
(32) Priority Date :16/09/2009
(33) Name of priority country :U.S.A.
(86) International Application No :PCT/US2010/049113
Filing Date :16/09/2010
(87) International Publication No :WO 2011/035019
(61) Patent of Addition to Application Number :NA
Filing Date :NA
(62) Divisional to Application Number :NA
Filing Date :NA

(71)**Name of Applicant :**
1)CYLENE PHARMACEUTICALS, INC.
Address of Applicant :5820 NANCY RIDGE DRIVE, SUITE 200, SAN DIEGO, CALIFORNIA 92121 UNITED STATES OF AMERICA U.S.A.
(72)**Name of Inventor :**
1)HADDACH, MUSTAPHA
2)PIERRE, FABIRCE

(57) Abstract :
The invention provides compounds that inhibit CK2 and/or Pim kinases and compositions containing such compounds. These tricyclic compounds and compositions containing them are useful for treating proliferative disorders such as cancer, as well as other kinase-associated conditions including inflammation, pain, pathogenic infections, and certain immunological disorders.

No. of Pages : 100 No. of Claims : 43

(12) PATENT APPLICATION PUBLICATION
(19) INDIA
(22) Date of filing of Application :13/04/2012
(21) Application No.3218/DELNP/2012 A
(43) Publication Date : 23/10/2015

(54) Title of the invention : CRANIAL IMPLANT

(51) International classification :A61F 2/28
(31) Priority Document No :09171189.5
(32) Priority Date :24/09/2010
(33) Name of priority country :EPO
(86) International Application No :PCT/EP2010/063887
Filing Date :21/09/2010
(87) International Publication No :WO 2011/036148
(61) Patent of Addition to Application Number :NA
Filing Date :NA
(62) Divisional to Application Number :NA
Filing Date :NA

(71)**Name of Applicant :**
1)ACADEMISCH ZIEKENHUIS MAASTRICHT
Address of Applicant :P. DEBYELAAN 25, NL-6229 HX MAASTRICHT NETHERLANDS Netherlands
2)UNIVERSITIET MAASTRICHT
(72)**Name of Inventor :**
1)BEERENS, MAIKEL MICHAEL ADRIANUS
2)LAEVEN, PAUL FRANS JOZEF
3)POUKENS, JULES MARIA NIKOLAAS

(57) Abstract :
An Implant, such as a cranial implant (3), for attachment to a defect (2) in a bone structure (1) having an edge (4) is described. The implant comprises a direction of extension and a rim (5) extending substantially perpendicular to the direction of extension of the implant. The rim is configured to be attached to the edge of the bone structure and comprises at least one mounting portion (6) configured to accommodate a fastener (7) such that at least a portion (7B) of the fastener is extendible in a direction extending away from the rim at an angle (a) which is at most acute with respect to the direction of extension of the implant. The implant is configured such that upon placing the implant in the defect, the fastener is extendible into the edge of the bone defect in a controllable manner.

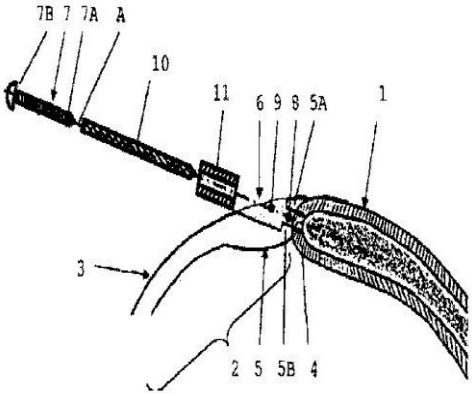

Fig. 1

No. of Pages : 24 No. of Claims : 16

(12) PATENT APPLICATION PUBLICATION
(21) Application No.3219/DELNP/2012 A
(19) INDIA
(22) Date of filing of Application :13/04/2012
(43) Publication Date : 23/10/2015

(54) Title of the invention : STABLE CO-FORMULATION OF HYALURONIDASE AND IMMUNOGLOBULIN, AND METHODS OF USE THEREOF

(51) International classification :A61K 9/00
(31) Priority Document No :61/277,045
(32) Priority Date :17/09/2009
(33) Name of priority country :U.S.A.
(86) International Application No :PCT/US2010/002545
Filing Date :16/09/2010
(87) International Publication No :WO 2011/034604
(61) Patent of Addition to Application Number :NA
Filing Date :NA
(62) Divisional to Application Number :NA
Filing Date :NA

(71)**Name of Applicant :**
1)BAXTER HEALTHCARE S.A.
Address of Applicant :THURGAUERSTRASSE 130, CH-8152 GLATTPARK SWITZERLAND Switzerland
2)BAXTER INTERNATIONAL INC.
(72)**Name of Inventor :**
1)TESCHNER, WOLFGANG
2)SVATOS, SONJA
3)BRUCKSCHWAIGER, LEOPOLD
4)WEBER, ALFRED
5)SCHWARZ, HANS-PETER
6)LEI, LAURA

(57) Abstract :
Provided herein are stable co-formulations of immunoglobulin and hyaluronidase that are stable to storage in liquid form at room temperature for at least 6 months and at standard refrigerator temperatures for 1 -2 years. Such co-formulations can be used in methods of treating IG-treatable diseases or conditions by subcutaneous administration.

No. of Pages : 250 No. of Claims : 55

(12) PATENT APPLICATION PUBLICATION
(19) INDIA
(22) Date of filing of Application :17/04/2012
(21) Application No.3307/DELNP/2012 A
(43) Publication Date : 23/10/2015

(54) Title of the invention : ALUMINUM OR ALUMINUM ALLOY BARREL ELECTROPLATING METHOD

(51) International classification :C25D 17/20
(31) Priority Document No :2009-240422
(32) Priority Date :19/10/2009
(33) Name of priority country :Japan
(86) International Application No :PCT/JP2010/068328
Filing Date :19/10/2010
(87) International Publication No :WO 2011/049066
(61) Patent of Addition to Application Number :NA
Filing Date :NA
(62) Divisional to Application Number :NA
Filing Date :NA

(71)**Name of Applicant :**
1)DIPOL CHEMICALS CO., LTD.
Address of Applicant :7-12, YAESU 2-CHOME, CHUO-KU, TOKYO 1040028, JAPAN Japan
(72)**Name of Inventor :**
1)MANABU INOUE
2)TADAHIRO OHNUMA
3)TOSHIKI INOMATA
4)TSUTOMU MIYADERA

(57) Abstract :
To provide a barrel electroplating method which is less prone to bare spots and adhesion failure such as blisters and peeling, and which makes it possible to obtain uniform plated coatings free from burnt deposits and poor brightness, irrespective of the amount of workpieces. The present invention provides a method for performing barrel electroplating by use of an aluminum or aluminum alloy plating bath, the method comprising rotating, swinging, or vibrating an anode (6) placed inside a barrel (4) receiving workpieces, and simultaneously rotating, swinging, or vibrating the barrel, with a voltage being applied between the anode and a cathode provided on an inner wall surface of the barrel.

No. of Pages : 43 No. of Claims : 5

(12) PATENT APPLICATION PUBLICATION
(19) INDIA
(22) Date of filing of Application :17/04/2012
(21) Application No.3308/DELNP/2012 A
(43) Publication Date : 23/10/2015

(54) Title of the invention : RETRACTABLE STRIKER AND SEAT A RETRACTABLE STRIKER

(51) International classification :B60N 2/30
(31) Priority Document No :61/248,552
(32) Priority Date :05/10/2009
(33) Name of priority country :U.S.A.
(86) International Application No :PCT/US2010/022187
Filing Date :27/01/2010
(87) International Publication No :WO 2011/043831
(61) Patent of Addition to Application Number :NA
Filing Date :NA
(62) Divisional to Application Number :NA
Filing Date :NA

(71)**Name of Applicant :**
1)JOHNSON CONTROLS TECHNOLOGY COMPANY
Address of Applicant :915 E. 32ND STREET, HOLLAND, MI 49424, USA U.S.A.
(72)**Name of Inventor :**
1)GUIDO HALADUDA
2)HELMUT J ECK
3)ALEXANDER DAVID
4)ERIC B. MICHALAK

(57) Abstract :
The present invention relates to a retractable striker and a vehicle seat for a vehicle with a retractable striker, wherein the retractable striker is arranged on a seat structure, wherein the retractable striker is at least partly retractable into the seat structure.

No. of Pages : 28 No. of Claims : 9

(12) PATENT APPLICATION PUBLICATION
(19) INDIA
(22) Date of filing of Application :17/04/2012
(21) Application No.3309/DELNP/2012 A
(43) Publication Date : 23/10/2015

(54) Title of the invention : LINING OF A VEHICLE PART

(51) International classification :B60R 13/02
(31) Priority Document No :10 2009 049 631.9
(32) Priority Date :15/10/2009
(33) Name of priority country :Germany
(86) International Application No :PCT/EP2010/006312
Filing Date :15/10/2010
(87) International Publication No :WO 2011/045074
(61) Patent of Addition to Application Number :NA
Filing Date :NA
(62) Divisional to Application Number :NA
Filing Date :NA

(71)**Name of Applicant :**
1)JOHNSON CONTROLS INTERIORS GMBH & CO. KG
Address of Applicant :MULHAUSENER STR. 35, 47929 GREFRATH, GERMANY Germany
(72)**Name of Inventor :**
1)ROBERT WEBER
2)CARSTEN PURSCHE
3)JOSEF BUDKE
4)MICHAEL WELZ

(57) Abstract :
The present invention relates to the lining of a Vehicle part, comprising a main body that has a reinforcement.

No. of Pages : 12 No. of Claims : 9

(12) PATENT APPLICATION PUBLICATION
(19) INDIA
(22) Date of filing of Application :19/04/2012
(21) Application No.3409/DELNP/2012 A
(43) Publication Date : 23/10/2015

(54) Title of the invention : INTERCHANGEABLE DRILLABLE TOOL

(51) International classification :E21B 33/12
(31) Priority Document No :12/573,766
(32) Priority Date :05/10/2009
(33) Name of priority country :U.S.A.
(86) International Application No :PCT/GB2010/001850
Filing Date :04/10/2010
(87) International Publication No :WO 2011/042685
(61) Patent of Addition to Application Number :NA
Filing Date :NA
(62) Divisional to Application Number :NA
Filing Date :NA

(71)**Name of Applicant :**
1)HALLIBURTON ENERGY SERVICES, INC.
Address of Applicant :P.O. BOX 1431, DUNCAN, OKLAHOMA 73536 (US) U.S.A.
(72)**Name of Inventor :**
1)PORTER, JESSE, C.
2)STANDRIDGE, WILLIAM, E.
3)NEER, ADAM, K.
4)MARTIN, TRACY
5)MANKE, KEVIN, R.

(57) Abstract :
A downhole tool for use in a well has a mandrel with an expandable sealing element disposed thereabout. The mandrel has a head portion threadedly connected thereto. A shoulder in the head portion and an upper end of the mandrel define an annular space. A sleeve with a bore therethrough may be positioned in the annular space. The head portion may be removed and a solid plug installed so that it fits within the annular space and so that the downhole tool will act as a bridge plug. The downhole tool has slip rings made up of a plurality of individual slip segments that are adhesively bonded to one another at the sides thereof.

No. of Pages : 21 No. of Claims : 27

(12) PATENT APPLICATION PUBLICATION
(19) INDIA
(22) Date of filing of Application :13/04/2012
(21) Application No.3207/DELNP/2012 A
(43) Publication Date : 23/10/2015

(54) Title of the invention : A SURFACE TREATING APPLIANCE

(51) International classification :A47L
(31) Priority Document No :0918035.7
(32) Priority Date :15/10/2009
(33) Name of priority country :U.K.
(86) International Application No :PCT/GB2010/051652
Filing Date :04/10/2010
(87) International Publication No :WO 2011/083292
(61) Patent of Addition to Application Number :NA
Filing Date :NA
(62) Divisional to Application Number :NA
Filing Date :NA

(71)**Name of Applicant :**
1)DYSON TECHNOLOGY LIMITED
Address of Applicant :TETBURY HILL, MALMESBURY WILTSHIRE, SN16 0RP UNITED KINGDOM U.K.
(72)**Name of Inventor :**
1)DYSON, JAMES
2)GAMMACK, PETER DAVID
3)COURTNEY, STEPHEN BENJAMIN
4)NEWTON, DAVID CHRISTOPHER JAMES
5)CZERPAK, SAMUEL JAMES
6)JOYNT, MICHAEL SEAN

(57) Abstract :
An upright surface treating appliance (10) includes a main body (14) having a user operable handle (94), and a support assembly (16) for allowing the appliance to be rolled along a surface using the handle. The support assembly (16) includes a yoke (26) pivotably connected to the main body (14), and a pair of domed-shaped wheels (40, 42) rotatably connected to the yoke (26). A surface treating head (12) is connected to the yoke (26). The yoke (26) is shaped so that a section (46) of the yoke (26) is located between the rims (40a, 42a) of the wheels (40, 42). To afford a compact appearance to the appliance, the outer surfaces of the wheels (40, 42) and the section (46) of the yoke (26) together at least partially delimit a substantially spherical volume (V).

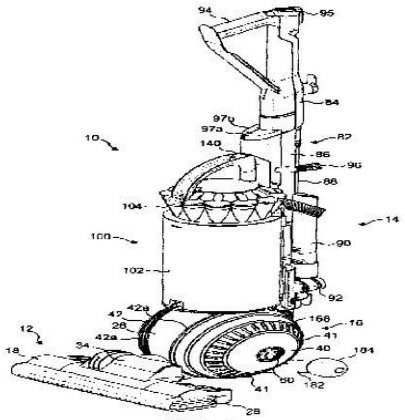

FIG. 1

No. of Pages : 94 No. of Claims : 22

(12) PATENT APPLICATION PUBLICATION
(19) INDIA
(22) Date of filing of Application :17/04/2012
(21) Application No.3310/DELNP/2012 A
(43) Publication Date : 23/10/2015

(54) Title of the invention : GADD45BETA TARGETING AGENTS

(51) International classification :C07K 5/06
(31) Priority Document No :0918579.4
(32) Priority Date :22/10/2009
(33) Name of priority country :U.K.
(86) International Application No :PCT/GB2010/001970
Filing Date :22/10/2010
(87) International Publication No :WO 2011/048390
(61) Patent of Addition to Application Number :NA
Filing Date :NA
(62) Divisional to Application Number :NA
Filing Date :NA

(71)**Name of Applicant :**
1)IMPERIAL INNOVATIONS LIMITED
Address of Applicant :52 PRINCES GATE, EXHIBITION ROAD, LONDON SW7 2PG, UNITED KINGDOM U.K.
(72)**Name of Inventor :**
1)FRANZOSO, GUIDO
2)JAXA-CHAMIEC, ALBERT ANDRZEJ
3)LOW, CAROLINE MINLI RACHEL
4)MONTI, SIMONA MARIA
5)RUVO, MENOTTI
6)TORNATORE, LAURA
7)TRALAU-STEWART, CATHERINE JANE

(57) Abstract :
Compounds based around tetrapeptide, tripeptide and dipeptide moeties and corresponding peptiod moeties. Related methods and pharmaceutical compositions for use in treatment of cancer, inflammatory diseases, and other disorders.

No. of Pages : 296 No. of Claims : 25

(12) PATENT APPLICATION PUBLICATION
(19) INDIA
(22) Date of filing of Application :17/04/2012
(21) Application No.3311/DELNP/2012 A
(43) Publication Date : 23/10/2015

(54) Title of the invention : DISPLAY INSTRUMENT HAVING A POINTER

(51) International classification :B60K 11/08
(31) Priority Document No :10 2009 050 580.6
(32) Priority Date :24/10/2009
(33) Name of priority country :Germany
(86) International Application No :PCT/EP2010/065351
Filing Date :13/10/2010
(87) International Publication No :WO 2011/047996
(61) Patent of Addition to Application Number :NA
Filing Date :NA
(62) Divisional to Application Number :NA
Filing Date :NA

(71)**Name of Applicant :**
1)JOHNSON CONTROLS AUTOMOTIVE ELECTRONICS GMBH
Address of Applicant :BENZSTRASSE 6, 75196 REMCHINGEN, GERMANY Germany
(72)**Name of Inventor :**
1)LUDEWIG, BERND
2)DAURELLE, JEAN-YVES

(57) Abstract :
The invention relates to a display instrument (1, 1) having a pointer (H, H) rotatably disposed about a pointer axis (2, 2), having a pointer coupling part (74, 74) and a pointer head (70, 70) and at least one pointer segment (71 to 72) disposed between same. According to the invention, at least one of the pointer segments (71 to 72) is retained in a main structure (6, 6) between the pointer coupling part (74, 74) and the pointer head (70, 70).

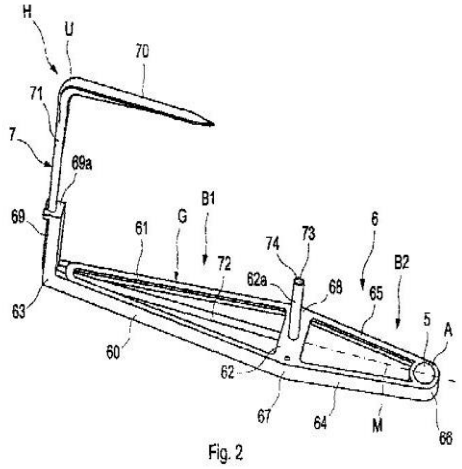

Fig. 2

No. of Pages : 19 No. of Claims : 7

(12) PATENT APPLICATION PUBLICATION
(21) Application No.3402/DELNP/2012 A
(19) INDIA
(22) Date of filing of Application :19/04/2012
(43) Publication Date : 23/10/2015

(54) Title of the invention : PROCESS AND APPARATUS FOR MULTISTAGE THERMAL TREATMENT OF RUBBER WASTE, IN PARTICULAR SCRAP TIRES

(51) International classification :C10B 53/07
(31) Priority Document No :NA
(32) Priority Date :NA
(33) Name of priority country :NA
(86) International Application No :PCT/EP2009/062474
Filing Date :25/09/2009
(87) International Publication No :WO 2011/035812
(61) Patent of Addition to Application Number :NA
Filing Date :NA
(62) Divisional to Application Number :NA
Filing Date :NA

(71)**Name of Applicant :**
1)PYROLYX AG
Address of Applicant :NYMPHENBURGERSTR. 70, 80335 MUNCHEN, GERMANY Germany
(72)**Name of Inventor :**
1)FIKRET DULGER
2)NIELS RAEDER

(57) Abstract :
A process and apparatus for multistage thermal treatment of rubber waste, in particular scrap tires, is proposed. The process comprises the steps of trans-ferring a product granulate of rubber waste into three different sequencing heating zones of a reactor (10). In the heating zones (11a, 11b, 11c) the product granulate is heated at a first temperature between 100° to 200°C, preferably 150° to 180°C, then at a second temperature between 200° to 350°C and at a third temperature between 300° to 600°C. The temperature is maintained until such time that no further oil is emitted within the respective heating zone. As a final step, the product granulate is removed from the reactor (10) and the desirable solid materials are separated.

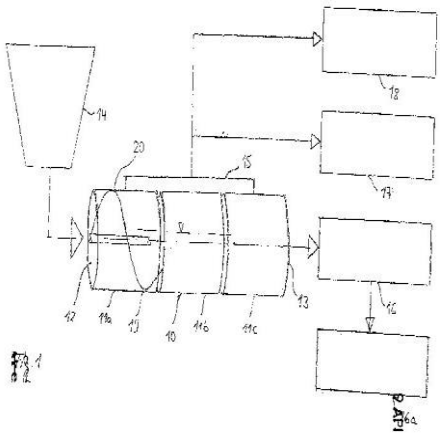

No. of Pages : 27 No. of Claims : 24

(12) PATENT APPLICATION PUBLICATION
(21) Application No.3403/DELNP/2012 A
(19) INDIA
(22) Date of filing of Application :19/04/2012
(43) Publication Date : 23/10/2015

(54) Title of the invention : LOVD MUTANTS EXHIBITING IMPROVED PROPERTIES TOWARDS SIMVASTATIN SYNTHESIS

(51) International classification :C12N 9/10
(31) Priority Document No :61/249,894
(32) Priority Date :08/10/2009
(33) Name of priority country :U.S.A.
(86) International Application No :PCT/US2010/052038
Filing Date :08/10/2010
(87) International Publication No :WO 2011/044496
(61) Patent of Addition to Application Number :NA
Filing Date :NA
(62) Divisional to Application Number :NA
Filing Date :NA

(71)**Name of Applicant :**
1)THE REGENTS OF THE UNIVERSITY OF CALIFORNIA
Address of Applicant :1111 FRANKLIN STREET 12TH FLOOR OAKLAND, CA 94607 USA U.S.A.
(72)**Name of Inventor :**
1)TANG, YI
2)GAO, XUE
3)XIE, XINKAI

(57) Abstract :
The invention disclosed herein relates to methods and materials for producing simvastatin and related compounds such as huvastatin. In particular, the disclosure teaches that variants of the LovD acyltransferase polypeptide can be engineered to exhibit properties that facilitate their use in the production of simvastatin and/or huvastatin. The materials and processes disclosed herein are designed so that fermentation facilities currently producing lovastatin can be converted to producing simvastatin and related compounds with minimal modifications.

No. of Pages : 152 No. of Claims : 35

(12) PATENT APPLICATION PUBLICATION
(19) INDIA
(22) Date of filing of Application :17/04/2012
(21) Application No.3315/DELNP/2012 A
(43) Publication Date : 23/10/2015

(54) Title of the invention : DISCONNECTION FROM MAINS USING SWITCHES FOR POWER TOOLS

(51) International classification :H02P 25/14
(31) Priority Document No :102009059884.7
(32) Priority Date :21/12/2009
(33) Name of priority country :Germany
(86) International Application No :PCT/EP2010/069331
Filing Date :10/12/2010
(87) International Publication No :WO 2011/085882
(61) Patent of Addition to Application Number :NA
Filing Date :NA
(62) Divisional to Application Number :NA
Filing Date :NA

(71)**Name of Applicant :**
1)ROBERT BOSCH GMBH
Address of Applicant :POSTFACH 30 02 20, 70442 STUTTGART, GERMANY Germany
(72)**Name of Inventor :**
1)ROTTMERHUSEN, HANS, HERMANN

(57) Abstract :
The present subject matter relates to a method for operating a mains-operated electric motor (2) for a power tool using switches, in particular semiconductor switches (1, 3), wherein the operation of the switches is monitored using an electronic controller (4) for operating safety.

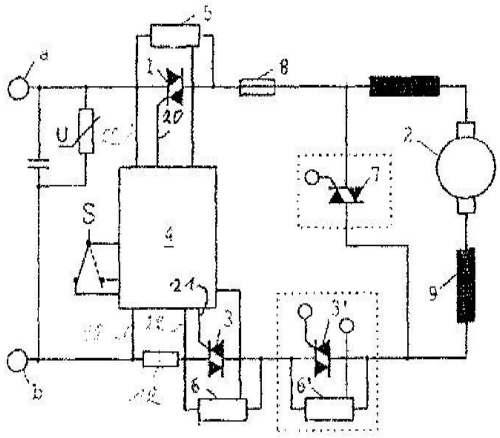

Fig.1

No. of Pages : 15 No. of Claims : 11

(12) PATENT APPLICATION PUBLICATION
(19) INDIA
(22) Date of filing of Application :19/04/2012

(21) Application No.3404/DELNP/2012 A
(43) Publication Date : 23/10/2015

(54) Title of the invention : INSECTICIDAL FERMENTATION BROTH FROM ACTINOMYCETES

(51) International classification :A01N 43/90
(31) Priority Document No :61/258,716
(32) Priority Date :06/11/2009
(33) Name of priority country :U.S.A.
(86) International Application No :PCT/US2010/055499
Filing Date :04/11/2010
(87) International Publication No :WO 2011/057006
(61) Patent of Addition to Application Number :NA
Filing Date :NA
(62) Divisional to Application Number :NA
Filing Date :NA

(71)**Name of Applicant :**
1)AGRAQUEST, INC.
Address of Applicant :1540 DREW AVENUE, DAVIS, CALIFORNIA 95618, UNITED STATES OF AMERICA U.S.A.
(72)**Name of Inventor :**
1)ZHU, HONG
2)JIMENEZ, JORGE
3)TAYLOR, COLLEEN
4)GUILHABERT-GOYA, MAGALIE
5)MARGOLIS, JONATHAN

(57) Abstract :
Methods and compositions are provided for the preparation of insecticidal compositions.

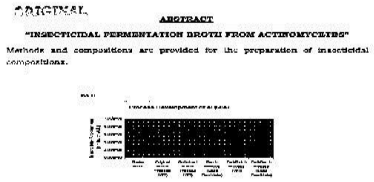
ORIGINAL

ABSTRACT

"INSECTICIDAL FERMENTATION BROTH FROM ACTINOMYCETES"

Methods and compositions are provided for the preparation of insecticidal compositions.

No. of Pages : 37 No. of Claims : 26

(12) PATENT APPLICATION PUBLICATION
(19) INDIA
(22) Date of filing of Application :19/04/2012
(21) Application No.3405/DELNP/2012 A
(43) Publication Date : 23/10/2015

(54) Title of the invention : COMPENSATING FOR MULTI-TOUCH SIGNAL BIAS DRIFT IN TOUCH PANELS

(51) International classification :G06F 3/044
(31) Priority Document No :12/642,090
(32) Priority Date :18/12/2009
(33) Name of priority country :U.S.A.
(86) International Application No :PCT/US2010/055272
Filing Date :03/11/2010
(87) International Publication No :WO 2011/075230
(61) Patent of Addition to Application Number :NA
Filing Date :NA
(62) Divisional to Application Number :NA
Filing Date :NA

(71)**Name of Applicant :**
1)INTEL CORPORATION
Address of Applicant :2200 MISSION COLLEGE BOULEVARD, SANTA CLARA, CALIFORNIA 95052, UNITED STATES OF AMERICA U.S.A.
(72)**Name of Inventor :**
1)BATEMAN, STEVEN, S.
2)GRAUMANN, DAVID, L.

(57) Abstract :
A system and method provide for selecting a sensor in an array of capacitive sensors, determining a row intensity for the selected sensor, and determining a column intensity for the selected sensor. The system and method may also provide for compensating the selected sensor for multi-touch signal bias drift, wherein the compensating may include adjusting an intensity of the selected sensor based on the row and column intensity.

FIG. 1

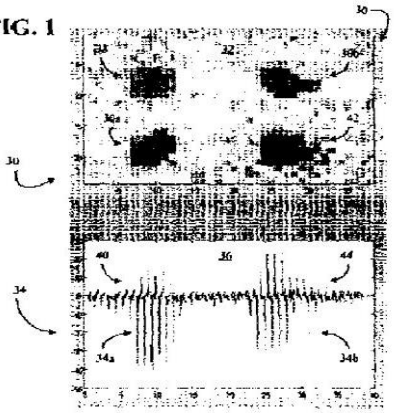

No. of Pages : 19 No. of Claims : 20

(12) PATENT APPLICATION PUBLICATION
(19) INDIA
(22) Date of filing of Application :19/04/2012
(21) Application No.3406/DELNP/2012 A
(43) Publication Date : 23/10/2015

(54) Title of the invention : METHODS AND ARRANGEMENTS FOR SYSTEM INFORMATION IN MULTIPLE AGGREGATED CELLS IN A WIRELESS COMMUNICATION SYSTEM

(51) International classification :H04W 76/04
(31) Priority Document No :61/257,201
(32) Priority Date :02/11/2009
(33) Name of priority country :U.S.A.
(86) International Application No :PCT/SE2010/050836
Filing Date :13/07/2010
(87) International Publication No :WO 2011/053217
(61) Patent of Addition to Application Number :NA
Filing Date :NA
(62) Divisional to Application Number :NA
Filing Date :NA

(71)**Name of Applicant :**
1)TELEFONAKTIEBOLAGET LM ERICSSON (PUBL)
Address of Applicant :SE-164 83 STOCKHOLM (SE) Sweden
(72)**Name of Inventor :**
1)SAGFORS, MATS
2)LINDSTROM, MAGNUS
3)BALDEMAIR, ROBERT

(57) Abstract :
The present invention relates to methods and arrangements in a wireless communication system supporting carrier aggregation and comprising a radio base station configured to broadcast system information in at least two cells. The method for the user equipment comprises receiving (410) configuration information for an aggregation of the at least two cells from the radio base station, identifying (420) a first of the at least two cells based on a configuration rule stating that the first of the at least two cells has a status that is different from the status of the remaining cells, and reading (430) the broadcasted system information only in the identified cell. The method may also comprise obeying (440) one or more parameters obtained from the read system information.

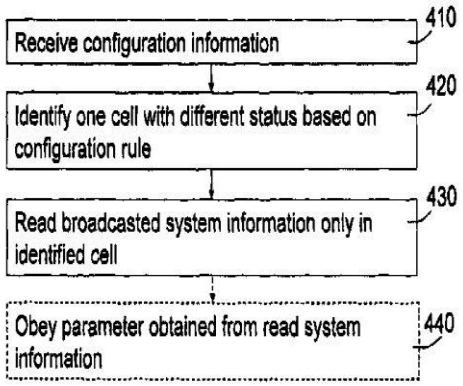

Fig. 4

No. of Pages : 29 No. of Claims : 20

(12) PATENT APPLICATION PUBLICATION
(19) INDIA
(22) Date of filing of Application :19/04/2012

(21) Application No.3407/DELNP/2012 A
(43) Publication Date : 23/10/2015

(54) Title of the invention : CASCADE REFRIGERATION SYSTEM WITH FLUOROOLEFIN REFRIGERANT

(51) International classification :F25B 7/00
(31) Priority Document No :61/257,527
(32) Priority Date :03/11/2009
(33) Name of priority country :U.S.A.
(86) International Application No :PCT/US2010/055218
Filing Date :03/11/2010
(87) International Publication No :WO 2011/056824
(61) Patent of Addition to Application Number :NA
Filing Date :NA
(62) Divisional to Application Number :NA
Filing Date :NA

(71)**Name of Applicant :**
1)E. I. DU PONT DE NEMOURS AND COMPANY
Address of Applicant :1007 MARKET STREET, WILMINGTON, DELAWARE 19898, U.S.A U.S.A.
(72)**Name of Inventor :**
1)MINOR, BARBARA, HAVILAND
2)KONTOMARIS, KONSTANTNOS
3)LECK, THOMAS, J.

(57) Abstract :
The present invention relates to a cascade refrigeration system which circulates a refrigerant comprising a fluoroolefin therethrough. The cascade refrigeration system includes a low temperature refrigeration loop and a medium temperature refrigeration loop. The fluoroolefin circulates through either loop, or both. In a particular embodiment, the fluoroolefin circulates through the medium temperature loop. In a particular embodiment, where the cascade refrigeration system includes a first and a second cascade heat exchanger, and a secondary heat transfer loop which extends between the first and second cascade heat exchangers, either the first and/or second refrigerant may be, but need not necessarily be, a fluoroolefin.

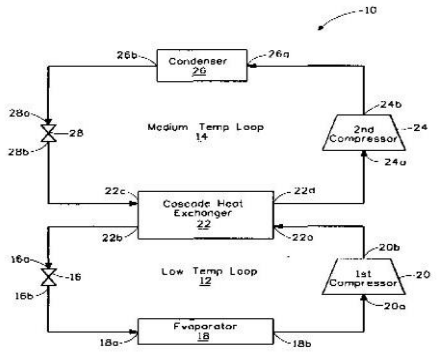

FIG. 1

No. of Pages : 67 No. of Claims : 15

(12) PATENT APPLICATION PUBLICATION
(19) INDIA
(22) Date of filing of Application :19/04/2012
(21) Application No.3408/DELNP/2012 A
(43) Publication Date : 23/10/2015

(54) Title of the invention : VEHICLE HEAT-EXCHANGE MODULE

(51) International classification :F01P 11/10
(31) Priority Document No :2009-284256
(32) Priority Date :15/12/2009
(33) Name of priority country :Japan
(86) International Application No :PCT/JP2010/071482
Filing Date :01/12/2010
(87) International Publication No :WO 2011/074417
(61) Patent of Addition to Application Number :NA
Filing Date :NA
(62) Divisional to Application Number :NA
Filing Date :NA

(71)**Name of Applicant :**
1)MITSUBISHI HEAVY INDUSTRIES, LTD.
Address of Applicant :16-5, KONAN 2-CHOME, MINATO-KU, TOKYO 108-8215, JAPAN Japan
(72)**Name of Inventor :**
1)YOSHINAO KOMATSU
2)ATSUSHI SUZUKI
3)TSUYOSHI EGUCHI

(57) Abstract :
An object is to provide a vehicle heat-exchange module that is capable of reducing abnormal sound generated by interference between rotor blades of a propeller fan and high-static-pressure regions generated at leading edges of stator blades, while decreasing the input power of a fan motor by providing the stator blades on the downstream side of the propeller fan. In a vehicle heat-exchange module (1) including a fan motor (7) that drives a propeller fan (8), the fan motor (7) is supported to the fan shroud (5) at a downstream side of the propeller fan (8) via motor support struts (6) formed into stator blades in a radiating pattern, and a distance (L1) between stator blades (14) formed of the motor support struts (6) and rotor blades (9) of the propeller fan (8) for a narrowest portion at the same position in the radial direction is at least 0.018D < L1, where D is the diameter of the rotor blades (9).

FIG. 1

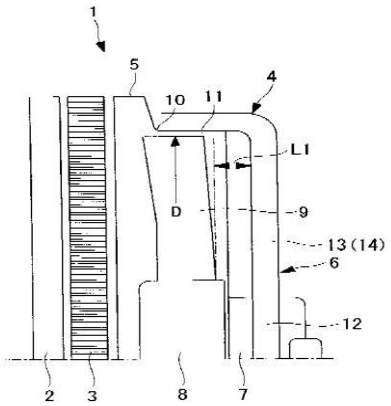

No. of Pages : 25 No. of Claims : 3

(12) PATENT APPLICATION PUBLICATION
(19) INDIA
(22) Date of filing of Application :17/04/2012
(21) Application No.3321/DELNP/2012 A
(43) Publication Date : 23/10/2015

(54) Title of the invention : IGBT COOLING METHOD

(51) International classification :H01L 23/34
(31) Priority Document No :12/653,237
(32) Priority Date :10/12/2009
(33) Name of priority country :U.S.A.
(86) International Application No :PCT/US2010/000689
Filing Date :08/03/2010
(87) International Publication No :WO 2011/071508
(61) Patent of Addition to Application Number :NA
Filing Date :NA
(62) Divisional to Application Number :NA
Filing Date :NA

(71)**Name of Applicant :**
1)DANFOSS TURBOCOR COMPRESSORS B.V.
Address of Applicant :KONINGSLAAN 17, 1075 AA AMSTERDAM, THE NETHERLANDS Netherlands
(72)**Name of Inventor :**
1)CONRY RONALD DAVID

(57) Abstract :
A method for cooling power electronic devices such as IGBTs. The method comprises placing the IGBT board in a containment structure and flooding the containment with circulating liquid refrigerant. The liquid refrigerant is boiled within the containment and the resulting gas is then removed for continued circulation within a heat engine. The phase change of the refrigerant provides excellent cooling properties. In addition, the ability to place the cooling medium directly over the IGBTs themselves represents a significant advantage.

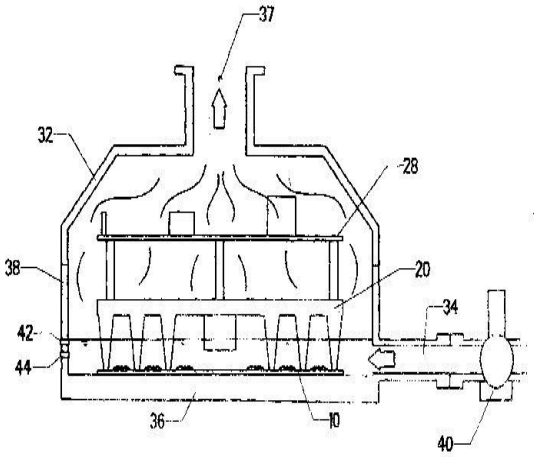

FIG. 6

No. of Pages : 25 No. of Claims : 20

(12) PATENT APPLICATION PUBLICATION
(19) INDIA
(22) Date of filing of Application :17/04/2012
(21) Application No.3322/DELNP/2012 A
(43) Publication Date : 23/10/2015

(54) Title of the invention : O-BENZYL NICOTINAMIDE ANALOGS AS MGLUR5 POSITIVE ALLOSTERIC MODULATORS

(51) International classification :A01N 43/40
(31) Priority Document No :61/244,417
(32) Priority Date :21/09/2009
(33) Name of priority country :U.S.A.
(86) International Application No :PCT/US2010/049697
Filing Date :21/09/2010
(87) International Publication No :WO 2011/035324
(61) Patent of Addition to Application Number :NA
Filing Date :NA
(62) Divisional to Application Number :NA
Filing Date :NA

(71)**Name of Applicant :**
1)VANDERBILT UNIVERSITY
Address of Applicant :CENTER FOR TECHNOLOGY TRANSFER AND COMMERCIALIZATION, 305 KIRKLAND HALL, 2201 WEST END AVENUE, NASHVILLE, TN 37240, USA U.S.A.
2)JANSSEN-CILAG S.A.
(72)**Name of Inventor :**
1)CONN P. JEFFREY
2)LINDSLEY CRAIG W.
3)WEAVER CHARLES DAVID
4)STAUFFER SHAUN R.
5)WILLIAMS RICHARD
6)MACDONALD GREGOR JAMES
7)BARTOLOME-NEBREDA JOSE MANUEL
8)ZHOU YA

(57) Abstract :
In one aspect, the invention relates to 0-benzyl nicotinamide analogs, derivatives thereof, and related compounds, which are useful as positive allosteric modulators of the metabotropic glutamate receptor subtype 5 (mGluR5); synthetic methods for making the compounds; pharmaceutical compositions comprising the compounds; and methods of treating neurological and psychiatric disorders associated with glutamate dysfunction using the compounds and compositions.

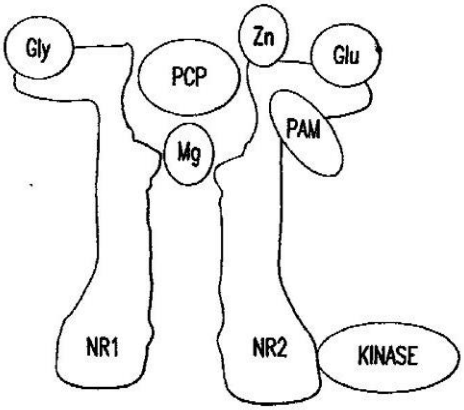

FIG.1

No. of Pages : 173 No. of Claims : 20

(12) PATENT APPLICATION PUBLICATION
(19) INDIA
(22) Date of filing of Application :17/04/2012
(21) Application No.3323/DELNP/2012 A
(43) Publication Date : 23/10/2015

(54) Title of the invention : METHOD AND VOICE ACTIVITY DETECTOR FOR A SPEECH ENCODER

(51) International classification :G10L 11/02
(31) Priority Document No :61/252,966
(32) Priority Date :19/10/2009
(33) Name of priority country :U.S.A.
(86) International Application No :PCT/SE2010/051117
Filing Date :18/10/2010
(87) International Publication No :WO 2011/049515
(61) Patent of Addition to Application Number :NA
Filing Date :NA
(62) Divisional to Application Number :NA
Filing Date :NA

(71)**Name of Applicant :**
1)TELEFONAKTIEBOLAGET LM ERICSSON (PUBL)
Address of Applicant :SE-164 83 STOCKHOLM (SE) Sweden
(72)**Name of Inventor :**
1)SEHLSTEDT, MARTIN

(57) Abstract :
The embodiments of the present invention relates to a primary voice activity detector and a method thereof. By using the method of the embodiments it is possible to determine whether frames of an input signal comprise voice. That is achieved by receiving a frame of the input signal, determining a first SNR of the received frame, comparing the determined first SNR with an adaptive threshold, and detecting whether the received frame comprises voice based on said comparison. The adaptive threshold is at least based on total noise energy of a noise level, an estimate of a second SNR and on energy variation between different frames.

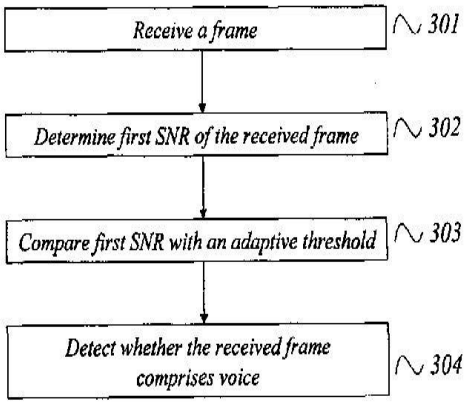

FIG. 3

No. of Pages : 25 No. of Claims : 13

(12) PATENT APPLICATION PUBLICATION
(19) INDIA
(22) Date of filing of Application :19/04/2012
(21) Application No.3418/DELNP/2012 A
(43) Publication Date : 23/10/2015

(54) Title of the invention : SELECTIVELY DISRUPTED WHOLE-CELL VACCINE

(51) International classification :A61K 39/395
(31) Priority Document No :61/250,348
(32) Priority Date :09/10/2009
(33) Name of priority country :U.S.A.
(86) International Application No :PCT/US2010/052298
Filing Date :12/10/2010
(87) International Publication No :WO 2011/044576
(61) Patent of Addition to Application Number :NA
Filing Date :NA
(62) Divisional to Application Number :NA
Filing Date :NA

(71)**Name of Applicant :**
1)CHILDREN'S MEDICAL CENTER CORPORATION
Address of Applicant :55 SHATTUCK STREET, BOSTON, MASSACHUSETTS 02115 USA. U.S.A.
2)PATH VACCINE SOLUTIONS
3)FUNDACAO BUTANTAN
(72)**Name of Inventor :**
1)MALLEY RICHARD
2)ANDERSON PORTER
3)LU YINGJIE
4)ROBERTSON GEORGE A.
5)ALDERSON MARK
6)MAISONNEUVE JEAN-FRANCOIS LUCIEN
7)TATE ANDREA MARIA
8)DE OLIVERIRA DIAS WALDELY
9)MAIMONI GONCALVES VIVIANE

(57) Abstract :
The present invention provides for immunogenic compositions and methods for producing an immunogenic composition with multiple immunity-inducing fractions of killed, whole-cell Streptococcus pneumoniae by selectively disrupting a whole cell bacterial preparation in such a manner that a soluble fraction that induces a primarily antibody response, and a cellular fraction that induces a primarily antibody-independent response, remain in the immunogenic composition.

No. of Pages : 75 No. of Claims : 18

(12) PATENT APPLICATION PUBLICATION
(21) Application No.3419/DELNP/2012 A
(19) INDIA
(22) Date of filing of Application :19/04/2012
(43) Publication Date : 23/10/2015

(54) Title of the invention : EXHAUST PURIFICATION SYSTEM OF INTERNAL COMBUSTION ENGINE

(51) International classification :F16B
(31) Priority Document No :NA
(32) Priority Date :NA
(33) Name of priority country :NA
(86) International Application No :PCT/JP2011/069859
Filing Date :25/08/2011
(87) International Publication No :NA
(61) Patent of Addition to Application Number :NA
Filing Date :NA
(62) Divisional to Application Number :NA
Filing Date :NA

(71)**Name of Applicant :**
1)TOYOTA JIDOSHA KABUSHIKI KAISHA
Address of Applicant :1, TOYOTA-CHO, TOYOTA-SHI, AICHI 471-8571, JAPAN Japan
(72)**Name of Inventor :**
1)BISAIJI YUKI

(57) Abstract :
In an internal combustion engine, an upstream side air-fuel ratio sensor (23), hydrocarbon feed valve (15), exhaust purification catalyst (13), and the downstream side air-fuel ratio sensor (24) are arranged in an engine exhaust passage in that order from the upstream side. If hydrocarbons are fed from the hydrocarbon feed valve (15), the air-fuel ratio which is detected by the downstream side air-fuel ratio sensor (24) changes to the rich side from the reference air-fuel ratio which is detected when hydrocarbons are not fed from the hydrocarbon feed valve (15). The amount of hydrocarbons which are fed from the hydrocarbon feed valve (15) and which slip through the exhaust purification catalyst (13) is detected from the air-fuel ratio difference between the air-fuel ratio detected by the upstream side air-fuel ratio sensor (23) and the reference air-fuel ratio detected by the downstream side air-fuel ratio sensor (24).

No. of Pages : 80 No. of Claims : 12

(12) PATENT APPLICATION PUBLICATION
(19) INDIA
(22) Date of filing of Application :17/04/2012
(21) Application No.3329/DELNP/2012 A
(43) Publication Date : 23/10/2015

(54) Title of the invention : RING-DIE FLAT BIOMASS EXTRUSION MOLDING MACHINE

(51) International classification :B41M
(31) Priority Document No :201010171178.4
(32) Priority Date :13/05/2010
(33) Name of priority country :China
(86) International Application No :PCT/CN2011/073499
Filing Date :29/04/2011
(87) International Publication No : NA
(61) Patent of Addition to Application Number :NA
Filing Date :NA
(62) Divisional to Application Number :NA
Filing Date :NA

(71)**Name of Applicant :**
1)Beijing Aoke Ruifeng Mechanical & Electrical Technology Co. Ltd.
Address of Applicant :17th floor Venture Plaza B No. 11 Anxiang Beili Chaoyang District Beijing 100101 China China
(72)**Name of Inventor :**
1)Shutian SHI
2)Zhenhai JIA
3)Yuan LI

(57) Abstract :
The present invention relates to a biomass extrusion molding machine with horizontally-placed annular die characterized in including a feed material receiving hopper a material-blocking cover an extrusion device a driving device; a discharged material receiving hopper a frame a motor and an extrusion device horizontally fixed on the frame and constituted by an extrusion wheel and a die disc wherein the die disc is provided with a plurality of die holes which are radially and uniformly distributed in a horizontal direction. In the present invention without an agitator and a cutter for cutting off materials each of the die holes may uniformly extrude the materials the die disc has a small thickness the molding die hole may be of a size selectable from a broad range and the machine has a superior molding effect high efficiency and a strong flexibility.

No. of Pages : 14 No. of Claims : 10

(12) PATENT APPLICATION PUBLICATION
(21) Application No.3329/DELNP/2015 A
(19) INDIA
(22) Date of filing of Application :21/04/2015
(43) Publication Date : 23/10/2015

(54) Title of the invention : METHODS FOR DETERMINING REACTIVE INDEX FOR CEMENT KILN DUST, ASSOCIATED COMPOSITIONS, AND METHODS OF USE

(51) International classification :C09K8/46,E21B33/13
(31) Priority Document No :13/662111
(32) Priority Date :26/10/2012
(33) Name of priority country :U.S.A.
(86) International Application No :PCT/US2013/066771
Filing Date :25/10/2013
(87) International Publication No :WO 2014/066737
(61) Patent of Addition to Application Number :NA
Filing Date :NA
(62) Divisional to Application Number :NA
Filing Date :NA

(71)**Name of Applicant :**
1)HALLIBURTON ENERGY SERVICES, INC.
Address of Applicant :10200 Bellaire Blvd., Houston ,Texas 77072 U.S.A.
(72)**Name of Inventor :**
1)MORGAN ,Ronnie G.
2)BRENNEIS, D. Chad
3)RODDY, Craig W.

(57) Abstract :
A variety of methods and compositions are disclosed , including , in one embodiment, a method of treating a well comprising: providing a treatment fluid comprising a base fluid and a blended cementitious component , wherein the blended cementitious component comprises kiln dust from two or more different sources; and introducing the treatment fluid into a well bore.

No. of Pages : 32 No. of Claims : 38

(12) PATENT APPLICATION PUBLICATION
(21) Application No.3420/DELNP/2012 A
(19) INDIA
(22) Date of filing of Application :19/04/2012
(43) Publication Date : 23/10/2015

(54) Title of the invention : CUTTING TOOL

(51) International classification :B25F
(31) Priority Document No :2010-199853
(32) Priority Date :07/09/2010
(33) Name of priority country :Japan
(86) International Application No :PCT/JP2011/069545
Filing Date :30/08/2011
(87) International Publication No :WO 2012/032966
(61) Patent of Addition to Application Number :NA
Filing Date :NA
(62) Divisional to Application Number :NA
Filing Date :NA

(71)**Name of Applicant :**
1)SUMITOMO ELECTRIC HARDMETAL CORP.
Address of Applicant :1-1, KOYAKITA 1-CHOME, ITAMI-SHI, HYOGO 664-0016, JAPAN Japan
(72)**Name of Inventor :**
1)SETOYAMA MAKOTO
2)KUKINO SATORU

(57) Abstract :
A cutting tool (1) having excellent chip treatability and adhesion resistance is provided. The cutting tool (1) includes a hard sintered body (4) in at least a cutting edge and has a rake face (2) and a flank face (3). The rake face (2) has a chip breaker (5) in a protruded or uneven shape. The hard sintered body contains at least 20% by volume of cubic boron nitride. A region of not more than 20 μm from a surface of the hard sintered body (4) on the rake face side includes A-structures made of cubic boron nitride and B-structures made of at least one selected from the group consisting of hexagonal boron nitride, amorphous boron nitride, and boron oxide. The volume ratio of the B-structures to the sum of the A-structures and B-structures, B/(A+B), is not less than 5% by volume and not more than 90% by volume.

No. of Pages : 39 No. of Claims : 7

(12) PATENT APPLICATION PUBLICATION
(21) Application No.3421/DELNP/2012 A
(19) INDIA
(22) Date of filing of Application :19/04/2012
(43) Publication Date : 23/10/2015

(54) Title of the invention : CUBIC BORON NITRIDE SINTERED AND COATED CUBIC BORON NITRIDE SINTERED BODY AND PREPARATION PROCESSES THEREOF

(51) International classification :C04B 35/583
(31) Priority Document No :2009-258096
(32) Priority Date :11/11/2009
(33) Name of priority country :Japan
(86) International Application No :PCT/JP2010/070091
Filing Date :11/11/2010
(87) International Publication No :WO 2011/059020
(61) Patent of Addition to Application Number :NA
Filing Date :NA
(62) Divisional to Application Number :NA
Filing Date :NA

(71)**Name of Applicant :**
1)TUNGALOY CORPORATION
Address of Applicant :11-1, YOSHIMA-KOGYODANCHI, IWAKI-SHI, FUKUSHIMA 9701144 JAPAN Japan
(72)**Name of Inventor :**
1)YOKOSHI SHO

(57) Abstract :
This is to provide a cubic boron nitride sintered body excellent in wear resistance. The cubic boron nitride sintered body comprises about 30 to about 70% by volume of cubic boron nitride; and as the reminder, a binder phase comprising at least one selected from an oxide, carbide, nitride and boride of Ti, Al, Zr, Y, Ce, Mg or Ca and mutual solid solutions thereof; and inevitable impurities, wherein the cubic boron nitride sintered body contains a-type Al2O3, ZrB2, ZrO2 and ZrO, and when an X-ray diffraction intensity of a (110) plane of a-type Al2O3 is represented by la, an X-ray diffraction intensity of a (101) plane of ZrB2 is represented by Izb, and an X-ray diffraction intensity of a (111) plane of ZrO is represented by Izo, (Izb/Ia) which shows a ratio of Izb based on Ia satisfies 0.13<(Izb/Ia)<0.30, and (Izo/Ia) which shows a ratio of Izo based on Ia satisfies 0.05<(Izo/Ia)<0.20.

No. of Pages : 17 No. of Claims : 16

(12) PATENT APPLICATION PUBLICATION
(19) INDIA
(22) Date of filing of Application :17/04/2012
(21) Application No.3326/DELNP/2012 A
(43) Publication Date : 23/10/2015

(54) Title of the invention : METHOD AND APPARATUS FOR EQUALIZATION OF RECEIVED SIGNALS

(51) International classification :H04L 25/03
(31) Priority Document No :12/576,343
(32) Priority Date :09/10/2009
(33) Name of priority country :U.S.A.
(86) International Application No :PCT/IB2010/054511
Filing Date :06/10/2010
(87) International Publication No :WO 2011/042870
(61) Patent of Addition to Application Number :NA
Filing Date :NA
(62) Divisional to Application Number :NA
Filing Date :NA

(71)**Name of Applicant :**
1)TELEFONAKTIEBOLAGET LM ERICSSON (PUBL)
Address of Applicant :SE-164 83 STOCKHOLM (SE) Sweden
(72)**Name of Inventor :**
1)KHAYRALLAH, ALI S.

(57) Abstract :
A receiver for a mobile communication device comprises an primary detector for generating an initial sequence estimate comprising a plurality of initial symbol estimates from a received symbol sequence corrupted by intersymbol interference, and a secondary detector to receive said initial sequence estimate and to output a final sequence estimate comprising a plurality of final symbol estimates. The secondary detector comprises a sequence generator configured to generate one or more revised sequence estimates by replacing at least one initial symbol estimate m said initial sequence estimate with a corresponding nearest neighbor symbol in each of said revised symbol estimates; an error calculator to compute error metrics for said revised sequence estimates; and a selection circuit to compare error metrics for said initial and revised sequence estimates and to output one of said initial or revised sequence estimates as said final sequence estimate based on said error metrics.

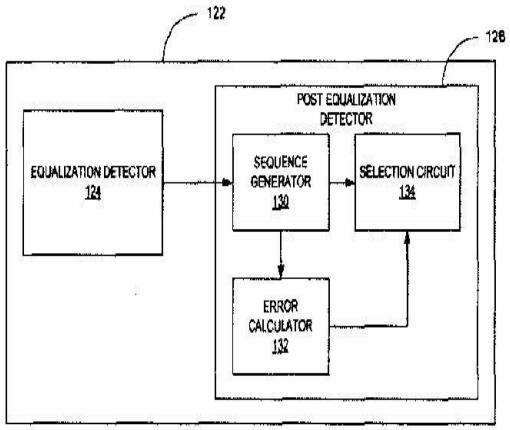

FIG. 2

No. of Pages : 26 No. of Claims : 18

(12) PATENT APPLICATION PUBLICATION
(19) INDIA
(22) Date of filing of Application :19/04/2012
(21) Application No.3424/DELNP/2012 A
(43) Publication Date : 23/10/2015

(54) Title of the invention : METHOD FOR PROCESSING DIFFICULT-TO-CUT CAST IRON

(51) International classification :B23B 3/00
(31) Priority Document No :2009-251869
(32) Priority Date :02/11/2009
(33) Name of priority country :Japan
(86) International Application No :PCT/JP2010/069172
Filing Date :28/10/2010
(87) International Publication No :WO 2011/052682
(61) Patent of Addition to Application Number :NA
Filing Date :NA
(62) Divisional to Application Number :NA
Filing Date :NA

(71)**Name of Applicant :**
1)SUMITOMO ELECTRIC HARDMETAL CORP.
Address of Applicant :1-1, KOYAKITA 1-CHOME, ITAMI-SHI, HYOGO 664-0016 JAPAN Japan
(72)**Name of Inventor :**
1) OKAMURA KATSUMI
2) KUKINO SATORU
3) FUKAYA TOMOHIRO

(57) Abstract :
In a pilot hole (21) of a workpiece (20) made of a difficult-to-cut cast iron, a cutting tool (10) having a leading end to which a cutting insert (11) is attached is inserted to cut the surface of the wall of the pilot hole (21). At this time, the cutting tool (10) rotates about an axis (a) and also revolves about another axis (P), so that contouring is performed on the workpiece (20) by the tool (10). The cutting insert (11) is formed of a sintered body having a CBN content of not less than 85% by volume, and the cutting insert (11) has a thermal conductivity of not less than 100 W/(mK).

No. of Pages : 20 No. of Claims : 4

(12) PATENT APPLICATION PUBLICATION
(19) INDIA
(22) Date of filing of Application :19/04/2012
(21) Application No.3425/DELNP/2012 A
(43) Publication Date : 23/10/2015

(54) Title of the invention : CATALYST COMPONENT FOR OLEFIN POLYMERIZATION AND PREPARATION METHOD THEREOF •

(51) International classification :C08F
(31) Priority Document No :200910236103.7
(32) Priority Date :20/10/2009
(33) Name of priority country :China
(86) International Application No :PCT/CN2010/000534
Filing Date :19/04/2010
(87) International Publication No : NA
(61) Patent of Addition to Application Number :NA
Filing Date :NA
(62) Divisional to Application Number :NA
Filing Date :NA

(71)**Name of Applicant :**
1)CHINA PETROLEUM & CHEMICAL CORPORATION
Address of Applicant :22A Chaoyangmenbei Street Chaoyang District Beijing 100728 China China
2)BEIJING RESEARCH INSTITUTE OF CHEMICAL INDUSTRY CHINA PETROLEUM & CHEMICAL CORPORATION
(72)**Name of Inventor :**
1)XIA Xianzhi
2)ZHAO Jin
3)LIU Yuexiang
4)ZHANG Jigui
5)LI Weili
6)TAN Yang
7)QIAO Suzhen
8)PENG Renqi
9)GAO Ping
10)YIN Maoping
11)ZHANG Tianyi

(57) Abstract :
A catalyst component for olefin polymerization is disclosed which comprises at least one diol ester type electron donor compound (a) and at least one diether type electron donor compound (b) among others wherein the molar ratio of a to b is 0.55-50. A preparation method of the catalyst component a catalyst comprising the catalyst component and an olefin polymerization method using the catalyst which can especially be used for preparation of polypropylenes of low ash contents are also disclosed.

No. of Pages : 28 No. of Claims : 21

(12) PATENT APPLICATION PUBLICATION
(19) INDIA
(22) Date of filing of Application :19/04/2012
(21) Application No.3426/DELNP/2012 A
(43) Publication Date : 23/10/2015

(54) Title of the invention : DEVICE AND METHOD FOR DELIVERING MEDICINE INTO THE TYMPANIC CAVITY

(51) International classification :A61M 5/46
(31) Priority Document No :61/251,792
(32) Priority Date :15/10/2009
(33) Name of priority country :U.S.A.
(86) International Application No :PCT/US2010/052569
Filing Date :13/10/2010
(87) International Publication No :WO 2011/047100
(61) Patent of Addition to Application Number :NA
Filing Date :NA
(62) Divisional to Application Number :NA
Filing Date :NA

(71)**Name of Applicant :**
1)ENTRA TYMPANIC, LLC
Address of Applicant :131 GREEN STREET, MEDFIELD, MASSACHUSETTS 02052, U.S.A U.S.A.
(72)**Name of Inventor :**
1)ROSENBLUM, LEV
2)PFEFFER, CHRISTIAN
3)KENNEY, GEORGE

(57) Abstract :
A device for substance delivery to and/or extraction from the tympanic cavity, comprising: a housing, having a distal surface, a proximal surface that is opposite to the distal surface, and a circumscribed surface that connects the distal surface and the proximal surface; at least one piercing element having at least one proximal piercing end and at least one distal piercing end, disposed within the housing in such manner that the at least one distal piercing end is/are generally facing the distal surface of the housing; and a means for flexing the tympanic membrane toward the distal end of the at least one piercing element.

No. of Pages : 28 No. of Claims : 20

(12) PATENT APPLICATION PUBLICATION
(21) Application No.3426/DELNP/2015 A
(19) INDIA
(22) Date of filing of Application :20/04/2015
(43) Publication Date : 23/10/2015

(54) Title of the invention : FULLY AUTOMATIC , DOSAGE ADJUSTED FEED RECEPTACLE FOR FEEDING POULTRY

(51) International classification :A01K31/00,A01K5/02
(31) Priority Document No :2012/11491
(32) Priority Date :08/10/2012
(33) Name of priority country :Turkey
(86) International Application No :PCT/TR2013/000306
Filing Date :08/10/2013
(87) International Publication No :WO 2014/058400
(61) Patent of Addition to Application Number :NA
Filing Date :NA
(62) Divisional to Application Number :NA
Filing Date :NA

(71)**Name of Applicant :**
1)KUTLUSAN KAFES EKIPMAN VE HAYVANCILIK TASIMACILIK SANAYI TICARET LIMITED SIRKETI
Address of Applicant :Ankara Karayolu 33. Km Akalan Ky¼, Kemalpasa, Izmir Turkey
(72)**Name of Inventor :**
1)BYKKUTLU ,Hasan

(57) Abstract :
A dosage adjusted feed receptacle (100) enabling the feeding of the poultry in the poultry farming , comprising a cage system (700) having lower rails (500) and upper rails (600) and being moved on said cage system (700), wherein it comprises the following: a mixer (138) provided with a mixing wire (149) fixed thereon; a needle bearing housing (140) embedded with said mixer (138); a large gear (145) providing rotational motion to said needle bearing housing (140); and an adapter (110) having a spiral shaft (111) positioned parallel thereto in the same axis below said needle bearing housing (140).

No. of Pages : 27 No. of Claims : 10

(12) PATENT APPLICATION PUBLICATION
(19) INDIA
(22) Date of filing of Application :17/04/2012
(21) Application No.3330/DELNP/2012 A
(43) Publication Date : 23/10/2015

(54) Title of the invention : HIGHLY PATHOGENIC AVIAN INFLUENZA VIRUS PROTEIN VACCINE DERIVED FROM TRANSGENIC PLANT AND PREPARING METHOD THEREOF

(51) International classification :C12P
(31) Priority Document No :10-2009-0094627
(32) Priority Date :06/10/2009
(33) Name of priority country :Republic of Korea
(86) International Application No :PCT/KR2010/006821
Filing Date :06/10/2010
(87) International Publication No : NA
(61) Patent of Addition to Application Number :NA
Filing Date :NA
(62) Divisional to Application Number :NA
Filing Date :NA

(71)**Name of Applicant :**
1)HELIX CO. LIMITED
Address of Applicant :Postech Venture Business Incubation Center #317 Hyoja-dong Nam-gu Pohang Kyeongsangbuk-do 790-784 Republic of Korea Republic of Korea
(72)**Name of Inventor :**
1)HWANG In Hwan
2)SOHN Eun Ju
3)KWON Eun Hye
4)NA Yun Jeong
5)JEON Eun Hyun
6)IM Se Jin
7)PARK Ki Seok
8)SUNG Young Chul

(57) Abstract :
The present invention relates to a method for producing transgenic plants which involves producing hemagglutinin proteins of the H5N1 virus in a highly efficient manner using a plant transformation recombinant vector wherein said vector can express in a highly efficient manner hemagglutinin proteins of the H5N1 virus which is the highly pathogenic avian influenza virus and can transport proteins expressed in plants to the endoplasmic reticulum and enable the retention of the proteins in the endoplasmic reticulum so as to accomplish glycosylation which is necessarily required for antigen activity.

No. of Pages : 66 No. of Claims : 14

(12) PATENT APPLICATION PUBLICATION
(19) INDIA
(22) Date of filing of Application :21/04/2015
(21) Application No.3330/DELNP/2015 A
(43) Publication Date : 23/10/2015

(54) Title of the invention : BALL REBOUNDING SYSTEM

(51) International classification :A63B69/36
(31) Priority Document No :61/704455
(32) Priority Date :22/09/2012
(33) Name of priority country :U.S.A.
(86) International Application No :PCT/US2013/061216
Filing Date :23/09/2013
(87) International Publication No :WO 2014/047576
(61) Patent of Addition to Application Number :NA
Filing Date :NA
(62) Divisional to Application Number :NA
Filing Date :NA

(71)**Name of Applicant :**
1)FREUND, Kurt ,T.
Address of Applicant :13414 Sunset Meadows Lane, St. Louis, MO 63128 U.S.A.
(72)**Name of Inventor :**
1)FREUND ,Kurt ,T.

(57) Abstract :
A ball rebounding device has high tension netting that is efficiently assembled, pulled taught and held in place within a frame using a tension rod system and a manufacturing process that uses levers between the frame and tension rods within the frame. The invention can be used in producing new ball rebounder and in retrofitting existing rebounder frames. The frame provides a perimeter support and an interior space. Tension rods are run through the cells of the netting and positioned in the interior space. A lever system is connected between the tension rods and the frame to pull the tension rods toward the corresponding sides of the frame thereby drawing the net taught within the frame. Once the netting is pulled taught, fasteners hold the tension rods in place next to the sides of the frame. The frame can be rigid or may have flexibility and act like a spring.

No. of Pages : 43 No. of Claims : 29

(12) PATENT APPLICATION PUBLICATION
(21) Application No.3331/DELNP/2012 A
(19) INDIA
(22) Date of filing of Application :17/04/2012
(43) Publication Date : 23/10/2015

(54) Title of the invention : HEAT-ABSORBING GLASS PLATE AND ITS PRODUCTION PROCESS

(51) International classification :B61G
(31) Priority Document No :2009-243284
(32) Priority Date :22/10/2009
(33) Name of priority country :Japan
(86) International Application No :PCT/JP2010/068744
Filing Date :22/10/2010
(87) International Publication No : NA
(61) Patent of Addition to Application Number :NA
Filing Date :NA
(62) Divisional to Application Number :NA
Filing Date :NA

(71)**Name of Applicant :**
1)ASAHI GLASS COMPANY LIMITED
Address of Applicant :5-1 Marunouchi 1-chome Chiyoda-ku Tokyo 100-8405 Japan. Japan
(72)**Name of Inventor :**
1)Yuya Shimada
2)Yuki Kondo

(57) Abstract :
To provide a heat-absorbing glass plate which satisfies both low solar transmittance and high visible light transmittance the transmitted light through which is green and which contains a small number of coloring components. A heat-absorbing glass plate which comprises soda lime silica glass containing coloring components the coloring components containing as represented by mass% based on the following oxides from 0.45 to 0.61% of total iron as calculated as Fe2O3 and from 0.2 to 0.6% of TiO2 which contains substantially no CoO Cr2O3 V2O5 MnO nor CeO2 which has a mass proportion of bivalent iron as calculated as Fe2O3 in total iron as calculated as Fe2O3 of from 45 to 60%

No. of Pages : 23 No. of Claims : 8

(12) PATENT APPLICATION PUBLICATION
(21) Application No.3331/DELNP/2015 A
(19) INDIA
(22) Date of filing of Application :21/04/2015
(43) Publication Date : 23/10/2015

(54) Title of the invention : MODULATION OF 11BETA-HYDROXYSTEROID DEHYDROGENASE 1 EXPRESSION FOR THE TREATMENT OF OCULAR DISEASES

(51) International classification :C12N15/113
(31) Priority Document No :0521716.1
(32) Priority Date :25/10/2005
(33) Name of priority country :U.K.
(86) International Application No :PCT/GB2006/050352
Filing Date :25/10/2006
(87) International Publication No : NA
(61) Patent of Addition to Application Number :NA
Filing Date :NA
(62) Divisional to Application Number :4137/DELNP/2008
Filed on :15/05/2008

(71)**Name of Applicant :**
1)SYLENTIS S.A.
Address of Applicant :C/ Jos Abascal, 2, E-28003 Madrid, Spain. Spain
(72)**Name of Inventor :**
1)JIM‰NEZ ANTN, Ana, Isabel
2)YAGUE, Angela, Sesto
3)JIM‰NEZ GMEZ, Ma, Concepci³n

(57) Abstract :
The invention relates to siNA compositions and methods for the treatment of eye conditions wherein the siNA compound capable of inhibiting the expression of 11 betahydroxysteroid dchydrogenase (11 beta-I ISD1).

No. of Pages : 41 No. of Claims : 5

(12) PATENT APPLICATION PUBLICATION
(21) Application No.3427/DELNP/2012 A
(19) INDIA
(22) Date of filing of Application :19/04/2012
(43) Publication Date : 23/10/2015

(54) Title of the invention : GENETIC LOCI ASSOCIATED WITH RESISTANCE TO TROPICAL RUST (PHYSOPELLA ZEAE) IN MAIZE

(51) International classification :A01H 5/10
(31) Priority Document No :61/257,977
(32) Priority Date :04/11/2009
(33) Name of priority country :U.S.A.
(86) International Application No :PCT/US2010/055242
Filing Date :03/11/2010
(87) International Publication No :WO 2011/056836
(61) Patent of Addition to Application Number :NA
Filing Date :NA
(62) Divisional to Application Number :NA
Filing Date :NA

(71)**Name of Applicant :**
1)E. I. DU PONT DE NEMOURS AND COMPANY
Address of Applicant :1007 MARKET STREET, WILMINGTON, DELAWARE 19898, U.S.A U.S.A.
(72)**Name of Inventor :**
1)MILACH, SANDRA CRISTINA KOTHE
2)LLACA, VICTOR
3)BUTRUILLE, MARYMAR GONCALVES
4)LIMBERGER, EMERSON
5)ALVES, ELCIO DE OLIVEIRA

(57) Abstract :
The invention relates to methods and compositions for identifying maize plants that have increased or decreased resistance to tropical rust. The methods use molecular markers to identify and select plants with increased resistance to tropical rust or to identify and counter-select plants with decreased resistance to tropical rust. Maize plants generated by the methods of the invention are also a feature of the invention. Also of interest are methods used to correlate allelic variation with a trait of interest.

No. of Pages : 129 No. of Claims : 19

(12) PATENT APPLICATION PUBLICATION
(19) INDIA
(22) Date of filing of Application :21/04/2015
(21) Application No.3333/DELNP/2015 A
(43) Publication Date : 23/10/2015

(54) Title of the invention : REDUCING GAS BLOWING APPARATUS FOR FLUIDIZED REDUCTION FURNACE

(51) International classification :C21B13/00,F27B15/10
(31) Priority Document No :NA
(32) Priority Date :NA
(33) Name of priority country :NA
(86) International Application No :PCT/KR2012/008302
Filing Date :12/10/2012
(87) International Publication No :WO 2014/058088
(61) Patent of Addition to Application Number :NA
Filing Date :NA
(62) Divisional to Application Number :NA
Filing Date :NA

(71)**Name of Applicant :**
1)POSCO
Address of Applicant :(Goedong- dong) 6261, Donghaean- ro, Nam- gu, Pohang- si, Gyeongsangbuk- do 790- 300 Republic of Korea
(72)**Name of Inventor :**
1)KIM ,Hyun Soo
2)CHO, Minyoung
3)KIM ,Hyun- Yong
4)LEE ,Jong Yeol

(57) Abstract :
An exemplary embodiment of the present invention provides an apparatus for blowing a reduction gas into a fluidized bed reduction furnace to supply the reduction gas to a flow layer over a distribution plate having passages. The apparatus includes: a flange that is attached to the top of the distribution plate and has holes that communicate with the passages; and nozzles that are made of graphite, with one end coupled to the flange and the other end in close contact with the passage, to guide a reduction gas to the flow layer.

No. of Pages : 23 No. of Claims : 9

(12) PATENT APPLICATION PUBLICATION
(21) Application No.3334/DELNP/2012 A
(19) INDIA
(22) Date of filing of Application :17/04/2012
(43) Publication Date : 23/10/2015

(54) Title of the invention : BELT CONVEYOR WITH A MODULAR INTERMEDIATE DRIVE BELT

(51) International classification :H05K
(31) Priority Document No :61/247,000
(32) Priority Date :30/09/2009
(33) Name of priority country :U.S.A.
(86) International Application No :PCT/US2010/049202
Filing Date :17/09/2010
(87) International Publication No :WO 2011/041131
(61) Patent of Addition to Application Number :NA
Filing Date :NA
(62) Divisional to Application Number :NA
Filing Date :NA

(71)**Name of Applicant :**
1)LAITRAM L.L.C.
Address of Applicant :Legal Department 200 Laitram Lane Harahan Louisiana 70123 United States of America. U.S.A.
(72)**Name of Inventor :**
1)Philip J. WUNSCH

(57) Abstract :
An intermediate drive system for driving a conveyor belt (66) with one or more intermediate drive belts (60). The intermediate drive belt (60) includes lateral rows of pivotable teeth (44) spaced apart along the length of the intermediate drive belt (60). The teeth (44) extend into the conveyor belt (66) along a portion of the carryway to drive the conveyor belt (66) in a conveying direction. The only component external to the intermediate drive belt (60) that the teeth (44) contact is the intermediate drive belt (60). Engagement and disengagement of the teeth (44) with the conveyor belt (.66) is effected without the use of cams against the teeth.

No. of Pages : 18 No. of Claims : 26

(12) PATENT APPLICATION PUBLICATION
(19) INDIA
(22) Date of filing of Application :21/04/2015
(21) Application No.3334/DELNP/2015 A
(43) Publication Date : 23/10/2015

(54) Title of the invention : SEPARATION APPARATUS AND METHOD

(51) International classification	:B65G15/08,B65G15/40,B01D33/044
(31) Priority Document No	:2012904430
(32) Priority Date	:10/10/2012
(33) Name of priority country	:Australia
(86) International Application No	:PCT/AU2013/001173
Filing Date	:10/10/2013
(87) International Publication No	:WO 2014/056036
(61) Patent of Addition to Application Number	:NA
Filing Date	:NA
(62) Divisional to Application Number	:NA
Filing Date	:NA

(71)**Name of Applicant :**
1)Z- FILTER PTY LTD
Address of Applicant :152 Vulcan Road, Canning Vale ,Western Australia 6155 Australia
(72)**Name of Inventor :**
1)GRAHAM, Neil Deryck Bray
2)GRAHAM ,Arthur Derrick Bray
3)COLE ,Bradley James
4)KERKHOFF, Jamie

(57) Abstract :
An apparatus for performing an operation on a fluid material to separate liquid from solid matter within the fluid material The apparatus comprises a belt structure movable along a path. The belt structure comprises a belt portion adapted to be assembled into a movable tubular structure within which at least part of the operation is to be performed. The tubular structure is permeable to liquid for separation of liquid from solid matter within the fluid material. The tubular structure is continuously assembled at one end thereof and continuously disassembled at another end thereof during movement of the belt structure. The path includes a descending portion along which the assembled tubular structure passes , the descending portion being inclined whereby at least some of the solid matter within fluid material in the tubular structure is caused to move downwardly along the descending portion under the influence of gravity to facilitate cleaning of the permeable tubular structure.

No. of Pages : 87 No. of Claims : 81

(12) PATENT APPLICATION PUBLICATION
(19) INDIA
(22) Date of filing of Application :20/04/2012
(21) Application No.3430/DELNP/2012 A
(43) Publication Date : 23/10/2015

(54) Title of the invention : INTEGRATED CARTRIDGE

(51) International classification :G01N 35/00
(31) Priority Document No :61/272,397
(32) Priority Date :21/09/2009
(33) Name of priority country :U.S.A.
(86) International Application No :PCT/US2010/002568
Filing Date :20/09/2010
(87) International Publication No :WO 2011/034620
(61) Patent of Addition to Application Number :NA
Filing Date :NA
(62) Divisional to Application Number :NA
Filing Date :NA

(71)**Name of Applicant :**
1)AKONNI BIOSYSTEMS
Address of Applicant :400 SAGNER AVENUE, SUITE 300, FREDERICK, MD 21701, U.S.A. U.S.A.
(72)**Name of Inventor :**
1)BELGRADER, PHILLIP
2)COONEY, CHRISTOPHER, G.
3)PEROV, ALEKSANDR. N.

(57) Abstract :
An integrated cartridge for sample processing and analysis is disclosed. The integrated cartridge contains a sample preparation chamber having a sample inlet and a sample outlet, and a sample purification chamber adapted to receive a replaceable sample purification unit containing a housing and an extraction filter inside the housing. The extraction filter specifically binds to a molecule of interest. The sample purification chamber has a sample inlet that is in fluid communication with the sample outlet of the sample preparation chamber. Also disclosed is a microarray-based sample analysis (MBSA) system.

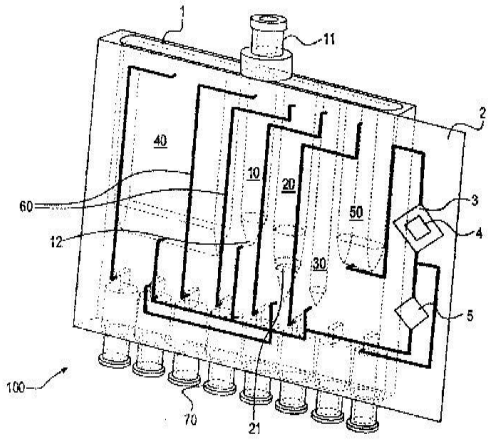

FIGURE 1A

No. of Pages : 68 No. of Claims : 31

(12) PATENT APPLICATION PUBLICATION
(19) INDIA
(22) Date of filing of Application :20/04/2012
(21) Application No.3431/DELNP/2012 A
(43) Publication Date : 23/10/2015

(54) Title of the invention : MAGNETIC LYSIS METHOD AND DEVICE

(51) International classification :B01F 13/08
(31) Priority Document No :61/272,396
(32) Priority Date :21/09/2009
(33) Name of priority country :U.S.A.
(86) International Application No :PCT/US2010/002569
Filing Date :20/09/2010
(87) International Publication No :WO 2011/034621
(61) Patent of Addition to Application Number :NA
Filing Date :NA
(62) Divisional to Application Number :NA
Filing Date :NA

(71)**Name of Applicant :**
1)AKONNI BIOSYSTEMS
Address of Applicant :400 SAGNER AVENUE, SUITE 300, FREDERICK, MD 21701, U.S.A. U.S.A.
2)QUANTALIFE, INC.
(72)**Name of Inventor :**
1)BELGRADER, PHILLIP
2)HINDSON, BENJAMIN

(57) Abstract :
A method for lysing cells is disclosed. The method includes stirring cells with a magnetic stir element in the presence of a plurality of cell lysis beads at a speed sufficient to lyse the cells. Also disclosed is a device for lysing cells. The device includes a container having a magnetic stir element and a plurality of cell lysis beads disposed therein. The container is dimensioned to allow rotation of the magnetic stir element inside the container.

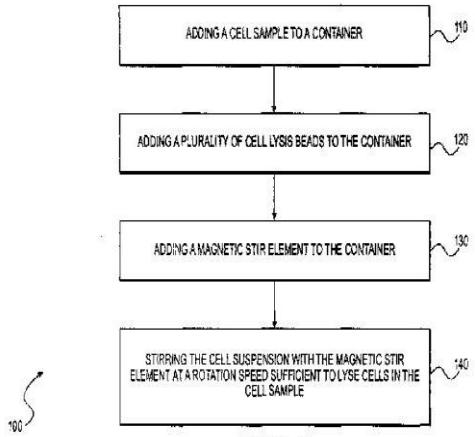

FIG. 1

No. of Pages : 28 No. of Claims : 40

(12) PATENT APPLICATION PUBLICATION
(19) INDIA
(22) Date of filing of Application :21/04/2015
(21) Application No.3337/DELNP/2015 A
(43) Publication Date : 23/10/2015

(54) Title of the invention : IRON- BASED NUTRITIVE COMPOSITION

(51) International classification	:A23K1/175,A23L1/304,A61K33/26
(31) Priority Document No	:2012/00667
(32) Priority Date	:10/10/2012
(33) Name of priority country	:Belgium
(86) International Application No	:PCT/EP2013/069374
Filing Date	:18/09/2013
(87) International Publication No	:WO 2014/056688
(61) Patent of Addition to Application Number	:NA
Filing Date	:NA
(62) Divisional to Application Number	:NA
Filing Date	:NA

(71)**Name of Applicant :**
1)PRAYON
Address of Applicant :Rue Joseph Wauters, 144, B- 4480 Engis Belgium
(72)**Name of Inventor :**
1)CAPPELLE, Philippe ,Jacques, Myriam
2)VERHELST, Kurt ,Thierry S.

(57) Abstract :
The present invention relates to an inorganic solid nutritive composition comprising at least one polyphosphate and at least one source of iron as micronutrient, wherein said composition is water -soluble and comprises an iron content of between 0.1% and 5% by weight of iron relative to the total weight of said solid composition.

No. of Pages : 33 No. of Claims : 33

(12) PATENT APPLICATION PUBLICATION
(19) INDIA
(22) Date of filing of Application :18/04/2012
(21) Application No.3338/DELNP/2012 A
(43) Publication Date : 23/10/2015

(54) Title of the invention : CO-CRYSTAL STRUCTURE OF FACTOR D AND ANTI-FACTOR D ANTIBODY

(51) International classification :C12N 9/64
(31) Priority Document No :61/280460
(32) Priority Date :04/11/2009
(33) Name of priority country :U.S.A.
(86) International Application No :PCT/US2010/055509
Filing Date :04/11/2010
(87) International Publication No :WO 2011/057014
(61) Patent of Addition to Application Number :NA
Filing Date :NA
(62) Divisional to Application Number :NA
Filing Date :NA

(71)**Name of Applicant :**
1)F. HOFFMANN-LA ROCHE AG
Address of Applicant :GRENZACHERSTRASSE 124, CH-4070 BASEL, SWITZERLAND Switzerland
(72)**Name of Inventor :**
1)CAMPAGEN, MENNO, VAN LOOKEREN
2)WIESMANN, CHRISTIAN

(57) Abstract :
The present invention is directed towards the co-crystal structure of Factor D and an anti-Factor D antibody or an antigen binding fragment thereof.

No. of Pages : 438 No. of Claims : 34

(12) PATENT APPLICATION PUBLICATION
(21) Application No.3338/DELNP/2015 A
(19) INDIA
(22) Date of filing of Application :21/04/2015
(43) Publication Date : 23/10/2015

(54) Title of the invention : SECUREMENT OF COLLECTING BAGS FOR HUMAN BODY WASTES TO THE SKIN

(51) International classification :A61F5/443
(31) Priority Document No :PA 2012 70672
(32) Priority Date :02/11/2012
(33) Name of priority country :Denmark
(86) International Application No :PCT/DK2013/050344
Filing Date :28/10/2013
(87) International Publication No :WO 2014/067526
(61) Patent of Addition to Application Number :NA
Filing Date :NA
(62) Divisional to Application Number :NA
Filing Date :NA

(71)**Name of Applicant :**
1)COLOPLAST A/S
Address of Applicant :Holtedam 1, DK -3050 Humlebaek Denmark
(72)**Name of Inventor :**
1)SCHERTIGER, Lars Olav
2)LUTHER ,Preben

(57) Abstract :
Disclosed is an anchoring element for engagement with a base plate for a collecting bag for human body wastes. Also disclosed is a kit for securing collecting bags for human body wastes to skin , comprising an anchoring element and an adhesive base plate and optionally a collecting bag for the human body wastes.

No. of Pages : 26 No. of Claims : 14

(12) PATENT APPLICATION PUBLICATION
(19) INDIA
(22) Date of filing of Application :20/04/2012
(21) Application No.3433/DELNP/2012 A
(43) Publication Date : 23/10/2015

(54) Title of the invention : CROSSLINKABLE POLYMER COMPOSITION AND CABLE WITH ADVANTAGEOUS ELECTRICAL PROPERTIES

(51) International classification :C08F 10/00
(31) Priority Document No :09175688.2
(32) Priority Date :11/11/2009
(33) Name of priority country :EPO
(86) International Application No :PCT/EP2010/066712
Filing Date :03/11/2010
(87) International Publication No :WO 2011/057928
(61) Patent of Addition to Application Number :NA
Filing Date :NA
(62) Divisional to Application Number :NA
Filing Date :NA

(71)**Name of Applicant :**
1)BOREALIS AG
Address of Applicant :WAGRAMER STRASSE 17-19, A-1220 VIENNA, AUSTRIA Austria
(72)**Name of Inventor :**
1)SMEDBERG, ANNIKA
2)KALLSTRAAND, BIRGITTA
3)NILSSON ULF
4)HAGSTRAND, PER-OLA
5)ENGLUND, VILLGOT
6)DOMINGUEZ, GUSTAVO
7)OLSSON, CARL-OLOF
8)RONGSHENG, LIU
9)JEROENSE, MARC

(57) Abstract :
The invention relates to a polymer composition with improved DC electrical properties and to a cable surrounded by at least one layer comprising the polymer composition.

No. of Pages : 49 No. of Claims : 28

(12) PATENT APPLICATION PUBLICATION
(19) INDIA
(22) Date of filing of Application :20/04/2012
(21) Application No.3434/DELNP/2012 A
(43) Publication Date : 23/10/2015

(54) Title of the invention : A POLYMER COMPOSITION COMPRISING A POLYOLEFIN PRODUCED IN A HIGH PRESSURE PROCESS, A HIGH PRESSURE PROCESS AND AN ARTICLE

(51) International classification :C08F 10/02
(31) Priority Document No :09175694.0
(32) Priority Date :11/11/2009
(33) Name of priority country :EUROPEAN UNION
(86) International Application No :PCT/EP2010/066710
Filing Date :03/11/2010
(87) International Publication No :WO 2011/057926
(61) Patent of Addition to Application Number :NA
Filing Date :NA
(62) Divisional to Application Number :NA
Filing Date :NA

(71)**Name of Applicant :**
1)BOREALIS AG
Address of Applicant :WAGRAMER STRASSE 17-19, A-1220 VIENNA, AUSTRIA Austria
(72)**Name of Inventor :**
1)NILSSON, ULF
2)SMEDBERG, ANNIKA
3)CAMPUS, ALFRED
4)BLOK, ACHIM
5)VOIGT, BJORN

(57) Abstract :
In a pilot hole (21) of a workpiece (20) made of a difficult-to-cut cast iron, a cutting tool (10) having a leading end to which a cutting insert (11) is attached is inserted to cut the surface of the wall of the pilot hole (21). At this time, the cutting tool (10) rotates about an axis (a) and also revolves about another axis (P), so that contouring is performed on the workpiece (20) by the tool (10). The cutting insert (11) is formed of a sintered body having a CBN content of not less than 85% by volume, and the cutting insert (11) has a thermal conductivity of not less than 100 W/(mK).

No. of Pages : 51 No. of Claims : 17

(12) PATENT APPLICATION PUBLICATION
(19) INDIA
(22) Date of filing of Application :20/04/2012
(21) Application No.3435/DELNP/2012 A
(43) Publication Date : 23/10/2015

(54) Title of the invention : PROCESS FOR STABILIZING HYPOPHOSPHITE

(51) International classification :C01B 25/165
(31) Priority Document No :NA
(32) Priority Date :NA
(33) Name of priority country :NA
(86) International Application No :PCT/CN2009/074584
Filing Date :23/10/2009
(87) International Publication No :WO 2011/047511
(61) Patent of Addition to Application Number :NA
Filing Date :NA
(62) Divisional to Application Number :NA
Filing Date :NA

(71)**Name of Applicant :**
1)RHODIA (CHINA) CO., LTD.
Address of Applicant :NO. 3966, JIN DU ROAD, XINZHUANG INDUSTRIAL ZONE, SHANGHAI 201108, CHINA China
(72)**Name of Inventor :**
1)DE CAMPO, FLORYAN
2)MURILLO, ANNELYSE
3)LI, JUNLI
4)ZHANG, TINGTING

(57) Abstract :
The current invention relates to a process for stabilizing hypophosphite salt, comprising the steps of a) washing the hypophosphite salt at least one time under a controlled value of pH comprised between 4 and 11, preferably between 5 and 8, said hypophosphite salt in an aqueous solution and/or in a solid state, and b) drying said hypophosphite salt under reduced pressure to remove the volatiles, to prevent the formation of a dangerous quantity of phosphine in its application as FR in polymers and the current invention also relates to a flame retardant polymer composition comprising a polymer and 0,1 to 30 weight percent based on the total weight of the composition of the hypophosphite salt stabilized by the above process.

No. of Pages : 16 No. of Claims : 15

(12) PATENT APPLICATION PUBLICATION
(19) INDIA
(22) Date of filing of Application :20/04/2012
(21) Application No.3436/DELNP/2012 A
(43) Publication Date : 23/10/2015

(54) Title of the invention : A CABLE AND PRODUCTION PROCESS THEREOF

(51) International classification :C08L 23/06
(31) Priority Document No :09175692.4
(32) Priority Date :11/11/2009
(33) Name of priority country :EUROPEAN UNION
(86) International Application No :PCT/EP2010/066709
Filing Date :03/11/2010
(87) International Publication No :WO 2011/057925
(61) Patent of Addition to Application Number :NA
Filing Date :NA
(62) Divisional to Application Number :NA
Filing Date :NA

(71)**Name of Applicant :**
1)BOREALIS AG
Address of Applicant :WAGRAMER STRASSE 17-19, A-1220 VEINNA, AUSTRIA Austria
(72)**Name of Inventor :**
1)NILSSON, ULF
2)SMEDBERG, ANNIKA
3)CAMPUS, ALFRED

(57) Abstract :
The invention relates to a cable comprising a semiconductive layer and an insulation layer with improved DC electrical properties.

No. of Pages : 69 No. of Claims : 20

(12) PATENT APPLICATION PUBLICATION
(19) INDIA
(22) Date of filing of Application :16/04/2012
(21) Application No.3270/DELNP/2012 A
(43) Publication Date : 23/10/2015

(54) Title of the invention : METHOD AND APPARATUS FOR RESPIRATING OF PATIENTS

(51) International classification :A61M 16/01
(31) Priority Document No :1037372
(32) Priority Date :07/10/2009
(33) Name of priority country :Netherlands
(86) International Application No :PCT/NL2010/000142
Filing Date :06/10/2010
(87) International Publication No :WO 2011/043650
(61) Patent of Addition to Application Number :NA
Filing Date :NA
(62) Divisional to Application Number :NA
Filing Date :NA

(71)**Name of Applicant :**
1)ALCMAIR PARTNERS BV
Address of Applicant :KLIPPERSTRAAT 28, NL-1826 DW ALKMAAR, NETHERLANDS Netherlands
(72)**Name of Inventor :**
1)BORM, PIETER
2)WESTERKAMP, BART

(57) Abstract :
Method and apparatus for respirating patients, with means for circulating gas in a conduit system, for varying the pressure in the line system, for measuring the gas flow, with connecting means for the patient and supplies for the components of the gas and for withdrawing carbon dioxide, with a first closing device to a discharge line of breathing gas, with in the line system, behind the connecting means to the discharge line a second closing means, and behind that and at a distance there from a third closing means, whilst means are provided by means of which the second and third closing means can be controlled such, that the part of the line system between the second and the third closing means can be closed off, whilst the line system further is provided with means for the generating of a gas flow.

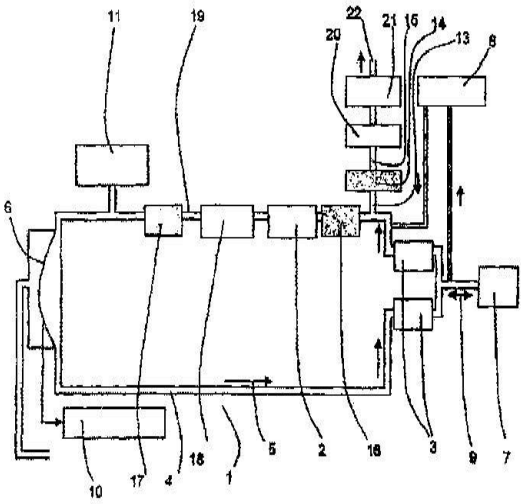

FIG. 1

No. of Pages : 15 No. of Claims : 19

(12) PATENT APPLICATION PUBLICATION
(19) INDIA
(22) Date of filing of Application :16/04/2012
(21) Application No.3271/DELNP/2012 A
(43) Publication Date : 23/10/2015

(54) Title of the invention : PHARMACEUTICAL COMPOSITIONS OF COMBINATIONS OF DIPEPTIDYL PEPTIDASE-4 INHIBITORS WITH PIOGLITAZONE

(51) International classification :A01N 43/50
(31) Priority Document No :61/254,299
(32) Priority Date :23/10/2009
(33) Name of priority country :U.S.A.
(86) International Application No :PCT/US2010/052225
Filing Date :12/10/2010
(87) International Publication No :WO 2011/049773
(61) Patent of Addition to Application Number :NA
Filing Date :NA
(62) Divisional to Application Number :NA
Filing Date :NA

(71)**Name of Applicant :**
1)MERCK SHARP & DOHME CORP.
Address of Applicant :126 EAST LINCOLN AVENUE, RAHWAY, NEW JERSEY 07065-0907, UNITED STATES OF AMERICA U.S.A.
(72)**Name of Inventor :**
1)BIRRINGER, NICHOLAS
2)JOHN, CHRISTOPHER, T.
3)LIU, ZHEN
4)PROCOPIO, ADAM
5)REGE, BHAGWANT

(57) Abstract :
This invention relates to a bilayer pharmaceutical compositions comprising fixed-dose combinations of a dipeptidyl peptidase-4 inhibitor and pioglitazone, methods of preparing such pharmaceutical compositions, and methods of treating Type 2 diabetes with such pharmaceutical compositions.

No. of Pages : 49 No. of Claims : 29

(12) PATENT APPLICATION PUBLICATION
(21) Application No.3349/DELNP/2012 A
(19) INDIA
(22) Date of filing of Application :18/04/2012
(43) Publication Date : 23/10/2015

(54) Title of the invention : HEAT RESISTANT PLA-ABS COMPOSITIONS

(51) International classification :C08L 67/04
(31) Priority Document No :61/256,743
(32) Priority Date :30/10/2009
(33) Name of priority country :U.S.A.
(86) International Application No :PCT/US2010/054233
Filing Date :27/10/2010
(87) International Publication No :WO 2011/053627
(61) Patent of Addition to Application Number :NA
Filing Date :NA
(62) Divisional to Application Number :NA
Filing Date :NA

(71)**Name of Applicant :**
1)POLYONE CORPORATION
Address of Applicant :33587 WALKER ROAD, AVON LAKE, OHIO 44012, UNITED STATES OF AMERICA U.S.A.
(72)**Name of Inventor :**
1)SHIXIONG ZHU
2)ROGER W. AVAKIAN

(57) Abstract :
A significant disadvantage of the use of polylactic acid (PLA) has been overcome by the use of acrylonitrile-butadiene-styrene (ABS) in combination with an epoxy functional styrene-acrylate oligomeric chain extender. The composition also often exceeds a threshold of 65°C in heat deflection temperature. Use of an impact modifier further improves the industrial versatility of the heat resistant PLA composition.

No. of Pages : 32 No. of Claims : 16

(12) PATENT APPLICATION PUBLICATION
(19) INDIA
(22) Date of filing of Application :18/04/2012
(21) Application No.3350/DELNP/2012 A
(43) Publication Date : 23/10/2015

(54) Title of the invention : CONTINUOUS CASTING MOULD WITH CIRCULAR OR POLYGONAL CROSS SECTION

(51) International classification :B22D 11/04
(31) Priority Document No :A1533/2009
(32) Priority Date :29/09/2009
(33) Name of priority country :Austria
(86) International Application No :PCT/EP2010/064240
Filing Date :27/09/2010
(87) International Publication No :WO 2011/039135
(61) Patent of Addition to Application Number :NA
Filing Date :NA
(62) Divisional to Application Number :NA
Filing Date :NA

(71)**Name of Applicant :**
1)SIEMENS VAI METALS TECHNOLOGIES GMBH
Address of Applicant :TURMSTRASSE 44, 4031 LINZ, AUSTRIA Austria
(72)**Name of Inventor :**
1)JOHANN POEPPL
2)SHAN GUOXIN
3)THOENE HEINRICH
4)FRANZ WIMMER

(57) Abstract :
The present invention relates to a mold (1) for casting molten metal into a strand with a circular or polygonal cross section in a continuous casting machine. It is an object of the invention to provide a mold with which firstly a sufficiently strong casting cone of the mold cavity can be predefined, such that sufficient and homogeneous growth of the strand shell is also ensured along the entire circumference of the casting cross section or of the mold cavity, and secondly unnecessarily high contact pressures and frictional forces of the strand in the mold, in particular jamming of the strand, are reliably prevented. This object is achieved by a mold (1) in which a depression (10) or a recurring sequence consisting of a region with a depression and a region without a depression extends over the longitudinal extent of the region of load relief (8) in the direction of withdrawal, wherein the depression (10) or the recurring sequence has the form of a helix.

Fig. 2

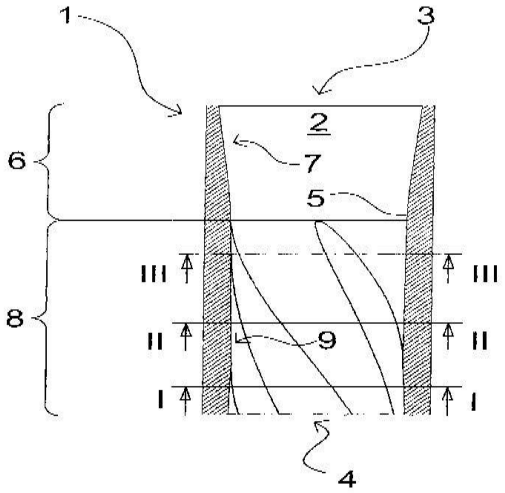

No. of Pages : 25 No. of Claims : 9

(12) PATENT APPLICATION PUBLICATION
(21) Application No.3440/DELNP/2012 A
(19) INDIA
(22) Date of filing of Application :20/04/2012
(43) Publication Date : 23/10/2015

(54) Title of the invention : METHOD FOR PRODUCING BUTANOL USING EXTRACTIVE FERMENTATION WITH ELECTROLYTE ADDITION

(51) International classification :C12P 7/16
(31) Priority Document No :61/263,519
(32) Priority Date :23/11/2009
(33) Name of priority country :U.S.A.
(86) International Application No :PCT/US2010/057791
Filing Date :23/11/2010
(87) International Publication No :WO 2011/063391
(61) Patent of Addition to Application Number :NA
Filing Date :NA
(62) Divisional to Application Number :NA
Filing Date :NA

(71)**Name of Applicant :**
1)BUTAMAX TM ADVANCED BIOFUELS LLC
Address of Applicant :200 POWDER MILL ROAD, WILMINGTON, DE 19803, U.S.A. U.S.A.
(72)**Name of Inventor :**
1)GRADY, MICHAEL, CHARLES
2)PATNAIK, RANJAN

(57) Abstract :
A method for producing butanol through microbial fermentation, in which the butanol product is removed during the fermentation by extraction into a water-immiscible organic extractant in the presence of at least one electrolyte at a concentration at least sufficient to increase the butanol partition coefficient relative to that in the presence of the salt concentration of the basal fermentation medium, is provided. The electrolyte may comprise a salt which dissociates in the fermentation medium, or in the aqueous phase of a biphasic fermentation medium, to form free ions. Also provided is a method and composition for recovering butanol from a fermentation medium.

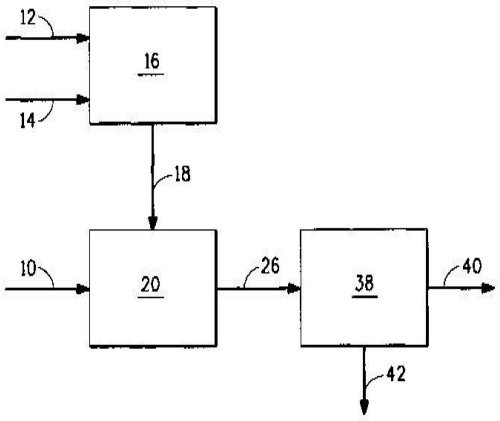

FIG. 1

No. of Pages : 188 No. of Claims : 26

(12) PATENT APPLICATION PUBLICATION
(19) INDIA
(22) Date of filing of Application :18/04/2012
(21) Application No.3347/DELNP/2012 A
(43) Publication Date : 23/10/2015

(54) Title of the invention : INLINE LIQUID DRUG MEDICAL DEVICES WITH LINEAR DISPLACEABLE SLIDING FLOW CONTROL MEMBER

(51) International classification :A61J 1/20
(31) Priority Document No :202070
(32) Priority Date :12/11/2009
(33) Name of priority country :Israel
(86) International Application No :PCT/IL2010/000915
Filing Date :04/11/2010
(87) International Publication No :WO 2011/058548
(61) Patent of Addition to Application Number :NA
Filing Date :NA
(62) Divisional to Application Number :NA
Filing Date :NA

(71)**Name of Applicant :**
1)MEDIMOP MEDICAL PROJECTS LTD.
Address of Applicant :17 HATIDHAR STREET, PO BOX 2499, 43665 RA'ANANA, ISRAEL Israel
(72)**Name of Inventor :**
1)NIMROD LEV
2)IGOR DENENBURG
3)MOSHE GILBOA

(57) Abstract :
Inline liquid drug medical device having a longitudinal device axis, a housing with a linear displaceable sliding flow control member displaceable along a transverse bore from a first flow control position for establishing flow communication be¬tween a first pair of ports for liquid drug reconstitution purposes to a second flow control position for establishing flow communication between a second pair of ports for liquid drug administration purposes, and a manually operated actuating mechanism for applying a linear displacement force for urging the flow control member to slide along the bore from its first flow control position to its second flow control position.

No. of Pages : 38 No. of Claims : 9

(12) PATENT APPLICATION PUBLICATION
(19) INDIA
(22) Date of filing of Application :18/04/2012
(21) Application No.3348/DELNP/2012 A
(43) Publication Date : 23/10/2015

(54) Title of the invention : MONOCLONAL ANTIBODIES TO PROGASTRIN AND THEIR USES

(51) International classification :C07K 16/26
(31) Priority Document No :61/252,625
(32) Priority Date :16/10/2009
(33) Name of priority country :U.S.A.
(86) International Application No :PCT/EP2010/006329
Filing Date :15/10/2010
(87) International Publication No :WO 2011/045080
(61) Patent of Addition to Application Number :NA
Filing Date :NA
(62) Divisional to Application Number :NA
Filing Date :NA

(71)**Name of Applicant :**
1)BIOREALITES
Address of Applicant :35 RUE DE VERDUN, F-92284 SURESNES, CEDEX, FRANCE France
2)INSTITUT NATIONAL DE LA SANTE ET DE LA RECHERCHE MEDICALE (INSERM)
3)CENTRE NATIONAL DE LA RECHERCHE SCIENTIFIQUE (CNRS)
(72)**Name of Inventor :**
1)JULIE PANNEQUIN
2)LAURE BOUDIER
3)DOMINIQUE JOUBERT
4)FREDERIC HOLLANDE

(57) Abstract :
The present disclosure is directed to progastrin monoclonal antibodies, fragments thereof, compositions comprising progastrin monoclonal antibodies, and methods of making and using progastrin monoclonal antibodies and compositions thereof. The present disclosure is directed to methods of treating colorectal cancer with progastrin monoclonal antibodies and compositions comprising progastrin monoclonal antibodies or fragments thereof. The present disclosure is further directed to methods comprising detection of progastrin, including methods of diagnosing colorectal cancer and methods of monitoring efficacy of anti-cancer therapy in subjects suffering from colorectal cancer.

No. of Pages : 196 No. of Claims : 49

(12) PATENT APPLICATION PUBLICATION
(19) INDIA
(22) Date of filing of Application :20/04/2012
(21) Application No.3443/DELNP/2012 A
(43) Publication Date : 23/10/2015

(54) Title of the invention : SOLAR-ENERGY COLLECTOR/CONCENTRATOR WITH CASSEGRAIN-TYPE OPTICS

(51) International classification :F24J 2/18
(31) Priority Document No :U 200901434
(32) Priority Date :15/12/2009
(33) Name of priority country :Spain
(86) International Application No :PCT/ES2010/000408
Filing Date :08/10/2010
(87) International Publication No :WO 2011/051510
(61) Patent of Addition to Application Number :NA
Filing Date :NA
(62) Divisional to Application Number :NA
Filing Date :NA

(71)**Name of Applicant :**
1)SOLTEC ENERGIAS RENOVABLES SL
Address of Applicant :C/GABRIEL CAMPILLO, S/N POL. INDUSTRIAL LA SERRETA 30500 MOLINA DE SEGURA MURCIA, SPAIN Spain
(72)**Name of Inventor :**
1)THOMAS GRANT
2)JOSE ALFONSO TERUEL HERNANDEZ
3)RAUL MORALES TORRES

(57) Abstract :
The collector/concentrator includes a primary concave reflector (1) supported on a base body (3) obtained by injection moulding, which defines a. central support (5) supporting a region around a central opening (6) of the primary reflector (1), a plurality of peripheral legs (7) supporting respective peripheral regions of the primary reflector (1) and first integral connection members (8) connecting said peripheral legs (7) with said central support (5). The peripheral legs (7) have bottom ends (7a) leaning on a substantially flat supporting surface and top ends (7b) located above said peripheral regions of the primary reflector (1) that are in contact with a substantially flat transparent panel (15) supporting a secondary convex reflector (2) that concentrates the solar radiation reflected by the primary reflector (1) towards a receiver unit (18) through said central opening (6).

No. of Pages : 21 No. of Claims : 21

(12) PATENT APPLICATION PUBLICATION
(19) INDIA
(22) Date of filing of Application :20/04/2012
(21) Application No.3444/DELNP/2012 A
(43) Publication Date : 23/10/2015

(54) Title of the invention : FLAME RETARDANT RESIN COMPOSITION AND MOLDED ARTICLE THEREOF

(51) International classification :C08L 69/00
(31) Priority Document No :NA
(32) Priority Date :NA
(33) Name of priority country :NA
(86) International Application No :PCT/JP2009/0710011
Filing Date :10/12/2009
(87) International Publication No :WO 2011/070689
(61) Patent of Addition to Application Number :NA
Filing Date :NA
(62) Divisional to Application Number :NA
Filing Date :NA

(71)**Name of Applicant :**
1)TEIJIN LIMITED
Address of Applicant :6-7, MINAMIHOMMACHI 1-CHOME, CHUO-KU, OSAKA-SHI, OSAKA, 541-0054, JAPAN Japan
(72)**Name of Inventor :**
1)KATSUHIRO YAMANAKA
2)TOSHIYUKI MIYAKE
3)MIZUHO SAITO
4)MASAMI KINOSHITA

(57) Abstract :
It is an object of the present invention to provide a flame retardant resin composition which is obtained from a. plant-derived raw material and has high flame retardancy and excellent physical properties and a molded article thereof. The present invention is a flame retardant resin composition comprising: 100 parts by weight of a resin component (component A) which contains at least 50 wt% of a polycarbonate (component A-l) having a unit represented by the following formula (A-l); and 1 to 100 parts by weight of an organic phosphorus compound (component B) represented by the following formula (1): (in the above formula, X1 and X2 are each independently an aromatic substituted alkyl group represented by the following formula (2): (in the above formula, AL is a branched or linear aliphatic hydrocarbon group having 1 to 5 carbon atoms, Ar is a phenyl group, naphthyl group or anthryl group, all of which may have a substituent, and may be bonded to any carbon atom contained in AL, and n is an integer of 1 to 3.)) , and a molded article thereof. The above flame retardant resin composition has high flame retardancy and excellent physical properties and is obtained from a plant-derived raw material.

No. of Pages : 61 No. of Claims : 16

(12) PATENT APPLICATION PUBLICATION
(21) Application No.3266/DELNP/2012 A
(19) INDIA
(22) Date of filing of Application :16/04/2012
(43) Publication Date : 23/10/2015

(54) Title of the invention : A METHOD OF ASSEMBLING A MOTOR VEHICLE PART

(51) International classification :B29C 65/48
(31) Priority Document No :0956705
(32) Priority Date :28/09/2009
(33) Name of priority country :France
(86) International Application No :PCT/FR2010/052026
Filing Date :27/09/2010
(87) International Publication No :WO 2011/036425
(61) Patent of Addition to Application Number :NA
Filing Date :NA
(62) Divisional to Application Number :NA
Filing Date :NA

(71)**Name of Applicant :**
1)COMPAGNIE PLASTIC OMNIUM
Address of Applicant :19 AVENUE JULES CARTERET, F-69007 LYON, FRANCE France
(72)**Name of Inventor :**
1)DESBOIS, BRICE
2)GONNET, CRISTOPHE

(57) Abstract :
During the method of assembling the assembled part for a motor vehicle from two parts (12, 14): at least one of the parts (12, 14) is provided with an adhesive (20) for bonding with the other part, the adhesive being of a first type that is activated under the effect of a first predetermined condition; at least one of the parts (12, 14) is provided with an adhesive (22) for bonding with the other part, the adhesive being different from the adhesive of the first type and suitable for activating under the effect of a second predetermined condition different from the first predetermined condition; the parts (12, 14) are then assembled together by the adhesive (20) of the first type by exposing the parts (12, 14) to the first predetermined condition in such a manner as to define a mutual relative position of the parts (12, 14) in the assembled part (10), and in the absence of the second predetermined condition; and the assembled-together parts (12, 14) are exposed to the second predetermined condition.

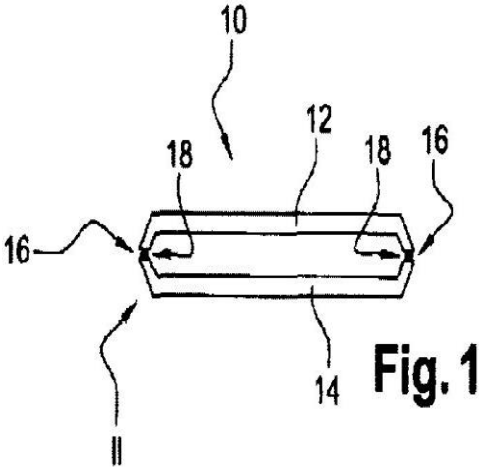

Fig. 1

No. of Pages : 16 No. of Claims : 9

(12) PATENT APPLICATION PUBLICATION
(19) INDIA
(22) Date of filing of Application :16/04/2012
(21) Application No.3267/DELNP/2012 A
(43) Publication Date : 23/10/2015

(54) Title of the invention : DEVICE FOR DETERMINING CONTROL DEVICE PARAMETERS

(51) International classification :G05B 13/02
(31) Priority Document No :10 2009 054 900.5
(32) Priority Date :17/12/2009
(33) Name of priority country :Germany
(86) International Application No :PCT/EP2010/068757
Filing Date :02/12/2010
(87) International Publication No :WO 2011/082909
(61) Patent of Addition to Application Number :NA
Filing Date :NA
(62) Divisional to Application Number :NA
Filing Date :NA

(71)**Name of Applicant :**
1)ROBERT BOSCH GMBH
Address of Applicant :POSTFACH 30 02 20, 70442 STUTTGART, GERMANY Germany
(72)**Name of Inventor :**
1)BOSSLER, MARKUS
2)REGER, MAXIMILIAN

(57) Abstract :
The subject matter describes a device (100) for determining control device parameters (12, 34) for a control device (102) that is provided for controlling a technical system. The device (100) includes a user interface (106) to select target variables; and a storage unit (119) to store at least one set (108, 110) of optimal parameters (112, 114, 116, 118). There is an association between the target variables to be selected and the at least one set (108, 110) of the optimal parameters (112, 114, 116, 118).

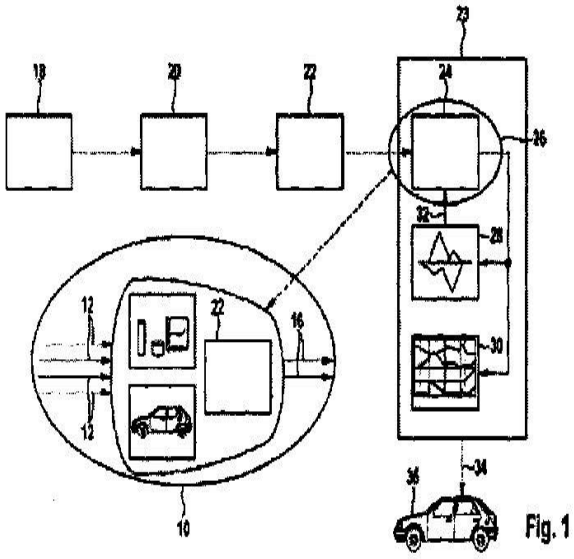

Fig. 1

No. of Pages : 14 No. of Claims : 10

(12) PATENT APPLICATION PUBLICATION
(19) INDIA
(22) Date of filing of Application :16/04/2012
(21) Application No.3268/DELNP/2012 A
(43) Publication Date : 23/10/2015

(54) Title of the invention : METHOD FOR DETERMINING FUNCTION PARAMETERS FOR A CONTROL UNIT

(51) International classification :G05B 19/042
(31) Priority Document No :10 2009 054 905.6
(32) Priority Date :17/12/2009
(33) Name of priority country :Germany
(86) International Application No :PCT/EP2010/068750
Filing Date :02/12/2010
(87) International Publication No :WO 2011/082908
(61) Patent of Addition to Application Number :NA
Filing Date :NA
(62) Divisional to Application Number :NA
Filing Date :NA

(71)**Name of Applicant :**
1)ROBERT BOSCH GMBH
Address of Applicant :POSTFACH 30 02 20, 70442 STUTTGART, GERMANY Germany
(72)**Name of Inventor :**
1)BOUMANS, MARCUS
2)BOSSLER, MARKUS
3)JOHANNABER, MARTIN
4)REGER, MAXIMILIAN

(57) Abstract :
The present subject matter describes a method for determining function parameters (20, 42) for a control unit (22), which is provided for actuating a technical system (10, 30). At least one target variable is predefined for a system behavior and a variation of the function parameters (20, 42) is carried out. From a received response to the function parameters (20, 42), an evaluation of the set function parameters (20, 42) is carried out taking into account the at least one predefined target variable.

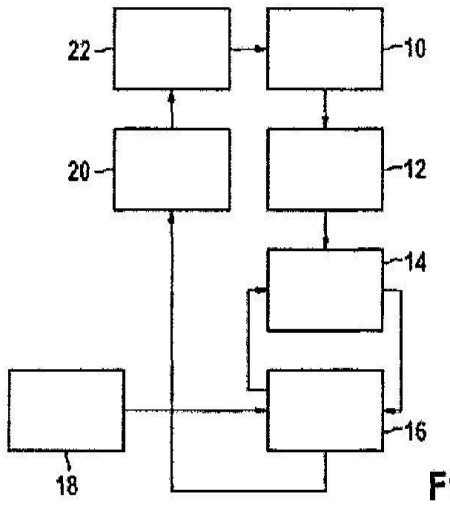

Fig. 1

No. of Pages : 11 No. of Claims : 10

(12) PATENT APPLICATION PUBLICATION
(19) INDIA
(22) Date of filing of Application :16/04/2012
(21) Application No.3269/DELNP/2012 A
(43) Publication Date : 23/10/2015

(54) Title of the invention : IMPROVED METHOD FOR REMOVING METALS AND AMINES FROM CRUDE OIL

(51) International classification :C10G 17/02
(31) Priority Document No :12/563,583
(32) Priority Date :21/09/2009
(33) Name of priority country :U.S.A.
(86) International Application No :PCT/US2010/049211
Filing Date :17/09/2010
(87) International Publication No :WO 2011/035085
(61) Patent of Addition to Application Number :NA
Filing Date :NA
(62) Divisional to Application Number :NA
Filing Date :NA

(71)**Name of Applicant :**
1)NALCO COMPANY
Address of Applicant :1601 W. DIEHL ROAD, NAPERVILLE, ILLINOIS 60563-1198 UNITED STATES OF AMERICA U.S.A.
(72)**Name of Inventor :**
1)GARCIA, JUAN M. III
2)LORDO, SAMUEL A.
3)BRADEN, MICAHEL L.

(57) Abstract :
A method of removing metals and amines from crude oil comprising adding an effective metal removing amount of one or more hydroxycarboxylic acids selected from lactic acid and malic acid and salts thereof to said crude oil; adding wash water to said crude oil; mixing said crude oil, acid and wash water to form an emulsion; and resolving said emulsion into an aqueous phase and crude oil having a reduced metals content.

No. of Pages : 9 No. of Claims : 15

(12) PATENT APPLICATION PUBLICATION
(19) INDIA
(22) Date of filing of Application :18/04/2012
(21) Application No.3359/DELNP/2012 A
(43) Publication Date : 23/10/2015

(54) Title of the invention : IMPLANT DEVICES HAVING VARYING BIOACTIVE AGENT LOADING CONFIGURATIONS

(51) International classification :A61K 9/00
(31) Priority Document No :61/244,736
(32) Priority Date :22/09/2009
(33) Name of priority country :U.S.A.
(86) International Application No :PCT/US2010/049750
Filing Date :22/09/2010
(87) International Publication No :WO 2011/037953
(61) Patent of Addition to Application Number :NA
Filing Date :NA
(62) Divisional to Application Number :NA
Filing Date :NA

(71)**Name of Applicant :**
1)EVONIK DEGUSSA CORPORATION
Address of Applicant :299 JEFFERSON ROAD, PARSIPPANY, NJ 07054 U.S. U.S.A.
(72)**Name of Inventor :**
1)BIGGS DANIELLE

(57) Abstract :
Described herein are implant devices comprising various configurations of bioactive agent loading which can be selected and used to tailor a particular bioactive agent release profile from the implant device.

No. of Pages : 24 No. of Claims : 11

(12) PATENT APPLICATION PUBLICATION
(21) Application No.3450/DELNP/2012 A
(19) INDIA
(22) Date of filing of Application :20/04/2012
(43) Publication Date : 23/10/2015

(54) Title of the invention : SPEAKER DIAPHRAGM AND SPEAKER DEVICE

(51) International classification :H04R 7/14
(31) Priority Document No :2009-243766
(32) Priority Date :22/10/2009
(33) Name of priority country :Japan
(86) International Application No :PCT/JP2010/068654
Filing Date :15/10/2010
(87) International Publication No :WO 2011/049189
(61) Patent of Addition to Application Number :NA
Filing Date :NA
(62) Divisional to Application Number :NA
Filing Date :NA

(71)**Name of Applicant :**
1)SONY CORPORATION
Address of Applicant :1-7-1 KONAN, MINATO-KU, TOKYO, JAPAN Japan
(72)**Name of Inventor :**
1)TAKAO SAKAMOTO

(57) Abstract :
The present invention further reduces a weight with an internal loss being large without reducing high rigidity and an environment resistance, thereby enabling a maximum sound pressure to be increased. A speaker diaphragm (2), and plural dimples (16) which are disposed radially from a center side toward the outside of the speaker diaphragm (2) and which have arch structures formed to have a concave-like shapes so as to disperse a stress are provided, whereby while the weight saving is realized in terms of the speaker diaphragm (2) by the plural dimples (16) formed to have the concave¬like shapes, the high rigidity is maintained by the arch structures of the dimples concerned, and a maximum sound pressure can be increased along with the weight saving concerned.

No. of Pages : 57 No. of Claims : 8

(12) PATENT APPLICATION PUBLICATION
(19) INDIA
(22) Date of filing of Application :18/04/2012

(21) Application No.3344/DELNP/2012 A
(43) Publication Date : 23/10/2015

(54) Title of the invention : TACTILE CUEING APPARATUS

(51) International classification :B64C 13/46
(31) Priority Document No :0918200.7
(32) Priority Date :19/10/2009
(33) Name of priority country :U.K.
(86) International Application No :PCT/GB2010/051685
Filing Date :08/10/2010
(87) International Publication No :WO 2011/048399
(61) Patent of Addition to Application Number :NA
Filing Date :NA
(62) Divisional to Application Number :NA
Filing Date :NA

(71)**Name of Applicant :**
1)BAE SYSTEMS PLC
Address of Applicant :6 CARLTON GARDENS, LONDON SW1Y 5AD, UNITED KINGDOM U.K.
(72)**Name of Inventor :**
1)ADAM TAYLOR

(57) Abstract :
A tactile cueing apparatus for incorporation in an aircraft flight control system comprising a flight control surface, and a pilots inceptor for moving the surface via a servo-assjsted mechanical linkage connecting the inceptor to the control surface, the apparatus comprising a force sensor for sensing a force applied to the inceptor by the pilot to move the control surface, an electromechanical actuator configured to be installed with the mechanical linkage between the inceptor and means in the system providing said servo-assistance, and control means programmed to cause the actuator (i) to move so that the linkage moves to a position determined by said force according to a predetermined relationship. (ii) to apply to the inceptor a resisting force according to a predetermined relationship and which when the linage has moved to its commanded position is equal and opposite to the force sensed by the force sensor.

Fig.6.

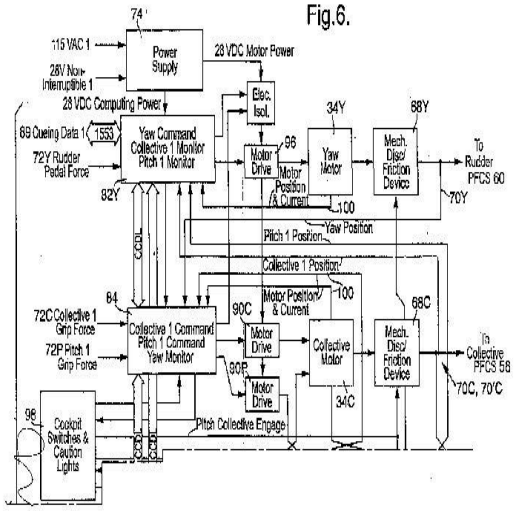

No. of Pages : 24 No. of Claims : 15

(12) PATENT APPLICATION PUBLICATION
(19) INDIA
(22) Date of filing of Application :20/04/2012
(21) Application No.3446/DELNP/2012 A
(43) Publication Date : 23/10/2015

(54) Title of the invention : BIODEGRADABLE HYDROGEL

(51) International classification :A61L 31/06
(31) Priority Document No :09013258.0
(32) Priority Date :21/10/2009
(33) Name of priority country :EPO
(86) International Application No :PCT/EP2010/006125
Filing Date :07/10/2010
(87) International Publication No :WO 2011/047789
(61) Patent of Addition to Application Number :NA
Filing Date :NA
(62) Divisional to Application Number :NA
Filing Date :NA

(71)**Name of Applicant :**
1)BAYER MATERIALSCIENCE AG
Address of Applicant :51368 LEVERKUSEN, GERMANY Germany
(72)**Name of Inventor :**
1)HEIKE HECKROTH
2)CHRISTOPH EGGERT
3)HARMUT NEFZGER
4)JORG HOFMANN
5)EDWARD BROWNE
6)KLAUS LORENZ

(57) Abstract :
The present invention relates to a hydrogel on the basis of polyurethane or polyurethane urea, said hydrogel comprising hydrolyzable functional groups in the polymer chain, to a method for producing the hydrogel and to the use of hydrogel as adhesion barries.

No. of Pages : 30 No. of Claims : 9

(12) PATENT APPLICATION PUBLICATION
(19) INDIA
(22) Date of filing of Application :20/04/2012
(21) Application No.3447/DELNP/2012 A
(43) Publication Date : 23/10/2015

(54) Title of the invention : METHOD OF MITIGATING CORROSION RATE OF OILFIELD TUBULAR GOODS

(51) International classification :E21B 41/02
(31) Priority Document No :61/257,158
(32) Priority Date :02/11/2009
(33) Name of priority country :U.S.A.
(86) International Application No :PCT/US2010/054105
Filing Date :26/10/2010
(87) International Publication No :WO 2011/053585
(61) Patent of Addition to Application Number :NA
Filing Date :NA
(62) Divisional to Application Number :NA
Filing Date :NA

(71)**Name of Applicant :**
1)BAKER HUGHES INCORPORATED
Address of Applicant :2929 ALLEN PARKWAY, SUITE 2100, HOUSTON, TX 77019-2118, U.S.A. U.S.A.
(72)**Name of Inventor :**
1)BRIAN EVANS
2)KUSHAL SETH
3)ALLEN D. GABRYSCH
4)PATRICK A. KELLY
5)DONALD NELSON HORNER JR.

(57) Abstract :
Acid-soluble cupric acetate may used in conjunction with potassium iodide to generate cuprous iodide (Cul) as an acid corrosion inhibition aid. A suitable corrosion inhibitor together with the aid protects steel surfaces in an acid environment, for instance, while acid fracturing or matrix acidizing subterranean formations. Cupric acetate monohydrate may be used with an alkali more iodide salt such as potassium iodide or sodium iodide to generate cuprous, iodide in situ. In aqueous acid solutions. Use of cupric acetate provides a somewhat delayed reaction rate with potassium iodide to generate the desired product, cuprous iodide, which has very low solubility in acid systems. The method includes delayed and in situ production of cuprous iodide for enhancing performance of commercially available corrosion inhibitors, commonly referred to as intensifying the effect of the corrosion inhibitor (corrosion inhibitor intensifier or simply an intensifier).

No. of Pages : 23 No. of Claims : 20

(12) PATENT APPLICATION PUBLICATION
(19) INDIA
(22) Date of filing of Application :20/04/2012
(21) Application No.3448/DELNP/2012 A
(43) Publication Date : 23/10/2015

(54) Title of the invention : BISPHOSPHONATE COMPOUNDS FOR TREATING BONE METABOLISM DISORDERS

(51) International classification :C07F 9/6574
(31) Priority Document No :61/254,886
(32) Priority Date :26/10/2009
(33) Name of priority country :U.S.A.
(86) International Application No :PCT/US2010/054124
Filing Date :26/10/2010
(87) International Publication No :WO 2011/056589
(61) Patent of Addition to Application Number :NA
Filing Date :NA
(62) Divisional to Application Number :NA
Filing Date :NA

(71)**Name of Applicant :**
1)WARNER CHILCOTT COMPANY, LLC
Address of Applicant :P.O. BOX 1005, UNION STREET KM 1.1, FAJARDO, PUERTO RICO 00738-1005, UNITED STATES OF AMERICA U.S.A.
(72)**Name of Inventor :**
1)FRANK HALLOCK EBETINO
2)ADAM WIESLAW MAZUR
3)ROY LEE MARTIN DOBSON

(57) Abstract :
Novel bisphosphonate cyclic acetal compounds are disclosed, as well as methods of preparing the compounds, pharmaceutical compositions including the compounds, and administration of the compounds in methods of treating bone metabolism disorders, such as abnormal calcium and phosphate metabolism.

No. of Pages : 223 No. of Claims : 67

(12) PATENT APPLICATION PUBLICATION
(19) INDIA
(22) Date of filing of Application :20/04/2012
(21) Application No.3449/DELNP/2012 A
(43) Publication Date : 23/10/2015

(54) Title of the invention : INDAZOLE AND PYRAZOLOPYRIDINE COMPOUNDS AS CCRI1 RECEPTOR ANTAGONISTS

(51) International classification :C07D 401/12
(31) Priority Document No :61/253,590
(32) Priority Date :21/10/2009
(33) Name of priority country :U.S.A.
(86) International Application No :PCT/US2010/053142
Filing Date :19/10/2010
(87) International Publication No :WO 2011/049917
(61) Patent of Addition to Application Number :NA
Filing Date :NA
(62) Divisional to Application Number :NA
Filing Date :NA

(71)**Name of Applicant :**
1)BOEHRINGER INGELHEIM INTERNATIONAL GMBH
Address of Applicant :BINGER STRASSE 173, 55216 INGELHEIM AM RHEIN, GERMANY Germany
(72)**Name of Inventor :**
1)BRIAN NICHOLAS COOK
2)DANIEL KUZMICH
3)CAN MAO
4)HOSSEIN RAZAVI

(57) Abstract :
Disclosed are CCRI receptor antagonists of the formula (1),wherein X is nitorgen or, C-R.; Ar1 is carbocyele, heteroary or heterocyclyl each optionally substituted by one to three Ra; Ar2 is earboeyele, heteroary or heterocyely, each optionally substituted by one to two R1 is hydrogen, C16 alkyl or C1-6 alkoxyC 1-6 alkyl, Also disclosed are compositions, methods of making and using compounds of the formula (1).

No. of Pages : 93 No. of Claims : 20

(12) PATENT APPLICATION PUBLICATION
(19) INDIA
(22) Date of filing of Application :18/04/2012
(21) Application No.3386/DELNP/2012 A
(43) Publication Date : 23/10/2015

(54) Title of the invention : VEHICLE SEAT

(51) International classification :A61M
(31) Priority Document No :2009-246455
(32) Priority Date :27/10/2009
(33) Name of priority country :Japan
(86) International Application No :PCT/JP2010/065347
Filing Date :07/09/2010
(87) International Publication No : NA
(61) Patent of Addition to Application Number :NA
Filing Date :NA
(62) Divisional to Application Number :NA
Filing Date :NA

(71)**Name of Applicant :**
1)NHK SPRING CO. LTD.
Address of Applicant :10 Fukuura 3-chome Kanazawa-ku Yokohama-shi Kanagawa 236-0004 Japan. Japan
(72)**Name of Inventor :**
1)NAKAGAKI Yoshihisa
2)MATSUFUJI Tomio
3)MUNEMURA Nozomu
4)MATSUMOTO Atsuo

(57) Abstract :
Provided is a vehicle seat which has a rigid seat back while being lightweight. A panel frame (22) of the vehicle rear seat is joined with a roughly X-shaped X rib (24). A first reinforcing member (24A) of the X rib (24) is installed in a straight line between an anchor wire (68) which is the load application point and a first supported member (22A) of the panel frame (22) which is supported onto the vehicle body side via a rotating hinge (48). Moreover a second reinforcing member (24B) which shares the center portion in the longitudinal direction with the first reinforcing member (24A)

No. of Pages : 34 No. of Claims : 16

(12) PATENT APPLICATION PUBLICATION
(21) Application No.3387/DELNP/2012 A
(19) INDIA
(22) Date of filing of Application :18/04/2012
(43) Publication Date : 23/10/2015

(54) Title of the invention : DIETHYL-[6-(4-HYDROXYCARBAMOYL-PHENYL-CARBAMOYLOXYMETHYL)-NAPHTALEN-2-YL-METHYL]-AMMONIUM CHLORIDE AND OTHER DERIVATIVES OF N-HYDROXY-BENZAMIDE FOR USE IN THE TREATMENT OF HIV INFECTIONS

(51) International classification :A61K
(31) Priority Document No :MI2009A001837
(32) Priority Date :23/10/2009
(33) Name of priority country :Italy
(86) International Application No :PCT/IB2010/054139
Filing Date :14/09/2010
(87) International Publication No : NA
(61) Patent of Addition to Application Number :NA
Filing Date :NA
(62) Divisional to Application Number :NA
Filing Date :NA

(71)**Name of Applicant :**
1)ITALFARMACO S.P.A.
Address of Applicant :Viale Fulvio Testi 330 I-20126 Milan Italy Italy
(72)**Name of Inventor :**
1)DINARELLO Charles
2)FOSSATI Gianluca
3)MASCAGNI Paolo

(57) Abstract :
Herein disclosed is a method for treating patients affected by HIV comprising administering N-hydroxy-benzamide-based histone deacetylase inhibitors such as: diethyl-[6-(4-hydroxycarbamoyl-phenyl-carbamoyloxymethyl)-naphtalen-2-yl- methyl] -ammonium chloride; 4-(2-(S)-benzoylamino-3-naphtalen-2-yl-propionylamino)-N-hydroxy- benzamide; and/or benzo[l 3]dioxole-5-carboxylic acid [l(S)-(4-hydroxycarbamoyl- phenylcarbamoyl)-2-naphtalen-2-yl-ethyl]-amide. Such histone deacetylase inhibitors are administered in a dosage ranging from 50 to 200 mg/day preferably from 100 to 200 mg/day so as to obtain a blood concentration between 125 and 250 nM.

No. of Pages : 14 No. of Claims : 10

(12) PATENT APPLICATION PUBLICATION
(19) INDIA
(22) Date of filing of Application :19/04/2012
(21) Application No.3388/DELNP/2012 A
(43) Publication Date : 23/10/2015

(54) Title of the invention : METHOD FOR USING VIRTUAL FACIAL EXPRESSIONS

(51) International classification :G06F
(31) Priority Document No :61/260,028
(32) Priority Date :11/11/2009
(33) Name of priority country :U.S.A.
(86) International Application No :PCT/US2010/054605
Filing Date :29/10/2010
(87) International Publication No :WO 2011/059788
(61) Patent of Addition to Application Number :NA
Filing Date :NA
(62) Divisional to Application Number :NA
Filing Date :NA

(71)**Name of Applicant :**
1)SOCIOTAR INC.
Address of Applicant :FASTH LAW OFFICES, 26 PINECREST PLAZA, SUITE 2, SOUTHERN PINES, NORTH CAROLINA 28387-4301 (US) U.S.A.
(72)**Name of Inventor :**
1)DAHLKVIST, ERIK
2)GUMPERT, MARTIN
3)VAN DER SCHOOT JOHAN

(57) Abstract :
The method is for using a virtual face. The virtual face (10) is provided on a screen (9) associated with a computer system (11) having a cursor (8). A user manipulates the virtual face (10) with the cursor (8) to show a facial expression. The computer system (11) determines coordinates (53) of the facial expression. The computer system (11) searches for facial expression coordinates (54) in a database (52) to match the coordinates (53). A word or phrase (56) is identified that is associated with the identified facial expression coordinates (54). The screen (9) displays the word (56) to the user. The user may also feed a word to the computer system that displays the facial expression associated with the word.

No. of Pages : 12 No. of Claims : 7

(12) PATENT APPLICATION PUBLICATION
(21) Application No.5118/DELNP/2012 A
(19) INDIA
(22) Date of filing of Application :11/06/2012
(43) Publication Date : 23/10/2015

(54) Title of the invention : INFORMATION PROCESSING APPARATUS, INFORMATION PROCESSING SYSTEM AND INFORMATION PROCESSING METHOD, AND PROGRAM

(51) International classification :G11B 20/10
(31) Priority Document No :2009-288019
(32) Priority Date :18/12/2009
(33) Name of priority country :Japan
(86) International Application No :PCT/JP2010/070103
Filing Date :11/11/2010
(87) International Publication No :WO 2011/074358
(61) Patent of Addition to Application Number :NA
Filing Date :NA
(62) Divisional to Application Number :NA
Filing Date :NA

(71)**Name of Applicant :**
1)SONY CORPORATION
Address of Applicant :1-7-1 KONAN, MINATO-KU, TOKYO 108-0075, JAPAN Japan
(72)**Name of Inventor :**
1)KENJIRO UEDA
2)KAZUO YAMAMOTO

(57) Abstract :
An apparatus and method configured to identify the type of a content tobe copiedandperforma copyingprocessina sequence according to the result of identification is provided. In an information processing apparatus configured to perform the copying process for copying recorded data in an information recording medium to other media or the like, the type of the data recorded in the recording medium of a copy source is identified. More specifically, whether the type of the content to be copied is either a reproduction-pass-specific content which sets a reproduction pass corresponding to the information processing apparatus and causes the information processing apparatus to execute the reproduction according to the reproductionpass, ora content-code-appliedcontentwhich verifies the reproduction sequence to be executed in the reproducing apparatus and verifies whether the reproduction process is executed according to the correct reproduction sequence is discriminated, and an optimal sequence is applied on the basis of the result of discrimination, whereby the copying process is executed. In this configuration, a reliable copying process on the basis of the optimal process according to various data types is realized.

No. of Pages : 144 No. of Claims : 12

(12) PATENT APPLICATION PUBLICATION
(19) INDIA
(22) Date of filing of Application :20/04/2012
(21) Application No.3452/DELNP/2012 A
(43) Publication Date : 23/10/2015

(54) Title of the invention : TRACKING METHOD COMBINING A PASSIVE RADAR AND OTHER SENSORS

(51) International classification :G01S 13/00
(31) Priority Document No :0905030
(32) Priority Date :20/10/2009
(33) Name of priority country :France
(86) International Application No :PCT/EP2010/065825
Filing Date :20/10/2010
(87) International Publication No :WO 2011/048158
(61) Patent of Addition to Application Number :NA
Filing Date :NA
(62) Divisional to Application Number :NA
Filing Date :NA

(71)**Name of Applicant :**
1)THALES
Address of Applicant :45, RUE DE VILLIERS, 92200 NEUILLY-SUR-SEINE, FRANCE France
(72)**Name of Inventor :**
1)SEBASTIEN ALLAM
2)NICOLAS MILLET
3)MATHIEU KLEIN

(57) Abstract :
Tracking method associating a passive radar with other sensors The invention concerns a method for merging detection information produced by various sensors of a detection system formed by a passive radar system including various bistatic bases and by an external sensor. The method includes two processing phases. During the first phase, for each bistatic base of the passive radar bistatic plots produced by that bistatic base are first merged with bistatic plots produced on the basis of plots transmitted by the external sensor and projected into the bistatic base concerned. Then, by associating all the bistatic bases, bistatic tracking is applied to the merged bistatic plots and unmerged bistatic plots coming from the external sensor. During the second phase a cartesian tracking is generated on the basis of bistatic plots that contributed to forming the bistatic tracks. The method enables formation of cartesian tracks of three types: those formed on the basis of plots coming only from the passive radar, those formed on the basis of plots coming only from the external sensor and those formed on the basis of plots coming from the passive radar and from the external sensor. The method may be extended to the situation where the detection system includes a plurality of radar receivers and/or a plurality of external sensors.

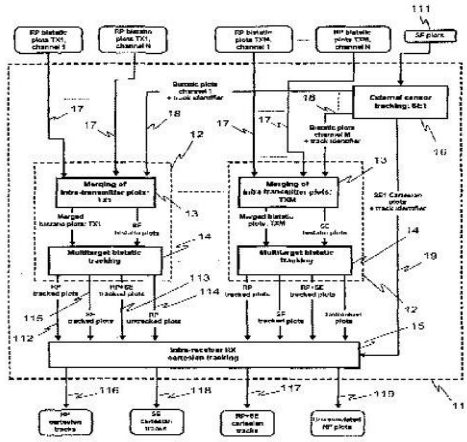

Fig. 1

No. of Pages : 29 No. of Claims : 9

(12) PATENT APPLICATION PUBLICATION
(19) INDIA
(22) Date of filing of Application :20/04/2012

(21) Application No.3453/DELNP/2012 A
(43) Publication Date : 23/10/2015

(54) Title of the invention : LITHIUM AIR BATTERY

(51) International classification :H01M 12/08
(31) Priority Document No :2009-248755
(32) Priority Date :29/10/2009
(33) Name of priority country :Japan
(86) International Application No :PCT/JP2010/068430
Filing Date :20/10/2010
(87) International Publication No :WO 2011/052440
(61) Patent of Addition to Application Number :NA
Filing Date :NA
(62) Divisional to Application Number :NA
Filing Date :NA

(71)**Name of Applicant :**
1)SONY CORPORATION
Address of Applicant :1-7-1 KONAN, MINATO-KU, TOKYO, JAPAN Japan
(72)**Name of Inventor :**
1)SHINICHI UESAKA

(57) Abstract :
A lithium air battery capable of being used for a long time with little deterioration due to influence by moisture in the air in which oxygen supply to a porous cathode is not inhibited by an air electrode current collector is provided. The lithium air battery includes an oxygen permselective film 80 that is less likely to transmit moisture vapor and that selectively transmits oxygen, an oxygen chamber 88 that stores oxygen, an air electrode current collector 62 made of a porous material, a diffusion layer 50 that is arranged between the air electrode current collector and a porous cathode and is made of a conductive material, the porous cathode 10 containing a conductive material and a catalyst material, a separator 30 that is less likely to pass moisture vapor, a nonaqueous electrolyte 40, an anode 20 that extracts lithium ions, and an anode current collector 64. The lithium air battery may have a water-repellent layer.

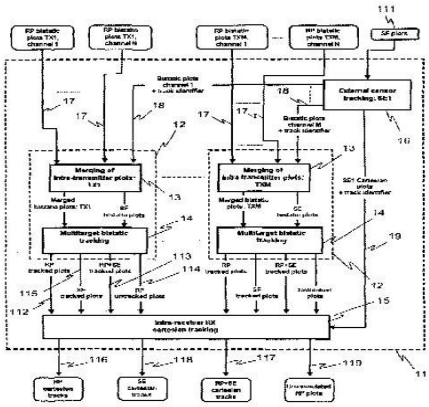

Fig. 1

No. of Pages : 44 No. of Claims : 10

(12) PATENT APPLICATION PUBLICATION
(19) INDIA
(22) Date of filing of Application :11/06/2012
(21) Application No.5120/DELNP/2012 A
(43) Publication Date : 23/10/2015

(54) Title of the invention : STABILIZED BLENDS CONTAINING FRICTION MODIFIERS

(51) International classification :C10M 141/06
(31) Priority Document No :61/264,871
(32) Priority Date :30/11/2009
(33) Name of priority country :U.S.A.
(86) International Application No :PCT/US2010/056923
Filing Date :17/11/2010
(87) International Publication No :WO 2011/066145
(61) Patent of Addition to Application Number :NA
Filing Date :NA
(62) Divisional to Application Number :NA
Filing Date :NA

(71)**Name of Applicant :**
1)THE LUBRIZOL CORPORATION
Address of Applicant :29400 LAKELAND BOULEVARD, WICKLIFFE, OHIO 44092-2298, UNITED STATES OF AMERICA U.S.A.
(72)**Name of Inventor :**
1)EWAN E. DELBRIDGE
2)JOHN J. MULLAY
3)JAMES D. BURRINGTON
4)JONATHAN S. SHAPRE
5)JOHN W. DUNKERLEY

(57) Abstract :
The present invention relates to functional fluid compositions containing friction modifiers, and specifically stable compositions containing friction modifiers with limited solubility in andlor limited compatibility with the functional fluids with which they are used. In particular the present invention deals with functional fluids used in internal combustion engines, such as engine oils, 10 and friction modifiers derived from hydroxy-carboxylic acids, where the friction modifier is present in the functional fluid composition at levels that would otherwise cause the composition to be unstable andlor hazy.

No. of Pages : 44 No. of Claims : 12

(12) PATENT APPLICATION PUBLICATION
(19) INDIA
(22) Date of filing of Application :11/06/2012
(21) Application No.5121/DELNP/2012 A
(43) Publication Date : 23/10/2015

(54) Title of the invention : METHODS FOR PRODUCING SILICON TETRAFLUORIDE

(51) International classification :C01B 33/107
(31) Priority Document No :61/291,149
(32) Priority Date :30/12/2009
(33) Name of priority country :U.S.A.
(86) International Application No :PCT/IB2010/055927
Filing Date :18/12/2010
(87) International Publication No :WO 2011/080657
(61) Patent of Addition to Application Number :NA
Filing Date :NA
(62) Divisional to Application Number :NA
Filing Date :NA

(71)**Name of Applicant :**
1)MEMC ELECTRONIC MATERIALS, INC.
Address of Applicant :501 PEARL DRIVE, ST. PETERS, MISSOURI 63376, UNITED STATES OF AMERICA U.S.A.
(72)**Name of Inventor :**
1)SATISH BHUSARAPU
2)PUNEET GUPTA

(57) Abstract :
Methods for producing silicon tetrafluoride by acid digestion of fluoride salts of alkali metal cr alkaline ealll, ni1.11 and aluminum, optionally, UI the presence of a source of silicon; methods for producing silane that include acid digesicliol f by- I iproducts of silane production to produce silicon tetrafluoride.

No. of Pages : 39 No. of Claims : 126

(12) PATENT APPLICATION PUBLICATION
(19) INDIA
(22) Date of filing of Application :11/06/2012
(21) Application No.5122/DELNP/2012 A
(43) Publication Date : 23/10/2015

(54) Title of the invention : METHOD FOR PRODUCING 2,

(51) International classification :C07C 209/48
(31) Priority Document No :09178860.4
(32) Priority Date :11/12/2009
(33) Name of priority country :EUROPEAN UNION
(86) International Application No :PCT/EP2010/069036
Filing Date :07/12/2010
(87) International Publication No :WO 2011/069994
(61) Patent of Addition to Application Number :NA
Filing Date :NA
(62) Divisional to Application Number :NA
Filing Date :NA

(71)**Name of Applicant :**
1)BAYER INTELLECTUAL PROPERTY GMBH
Address of Applicant :CREATIVE CAMPUS MONHEIM BLDG. 4865, ALFRED-NOBEL-STR. 10, D-40789 MONHEIM, GERMANY Germany
(72)**Name of Inventor :**
1)NORBERT LUI
2)STEFAN ANTONS
3)WAHED AHMED MORADI

(57) Abstract :
The present invention relates to a process for preparing 2,2-difluoroethylamine of the formula (I) and salts thereof, for example sulphates, hydrochlorides or acetates, which proceeds from difluoroacetonitrile.

No. of Pages : 10 No. of Claims : 9

(12) PATENT APPLICATION PUBLICATION
(19) INDIA
(22) Date of filing of Application :11/06/2012
(21) Application No.5123/DELNP/2012 A
(43) Publication Date : 23/10/2015

(54) Title of the invention : ELECTARIC ACCUMULATOR UTILIZING AN ULTRA-CAPACITOR ARRAY

(51) International classification :B64D 41/00
(31) Priority Document No :12/638,485
(32) Priority Date :15/12/2009
(33) Name of priority country :U.S.A.
(86) International Application No :PCT/CA2010/000428
Filing Date :23/03/2010
(87) International Publication No :WO 2011/072366
(61) Patent of Addition to Application Number :NA
Filing Date :NA
(62) Divisional to Application Number :NA
Filing Date :NA

(71)**Name of Applicant :**
1)MESSIER-DOWTY INC.
Address of Applicant :574 MONARCH AVENUE, AJAX, ONTARIO L1S 2G8, CANADA Canada
(72)**Name of Inventor :**
1)CHRIS BROOKFIELD

(57) Abstract :
Disclosed is an electric accumulator for selectively operating at least one aircraft device: The electric accumulator includes an ultra-capacitor array for storing electrical energy, which can later be used to power an aircraft device. The stored electrical energy can also be used as a source of emergency backup power. The distribution of the electrical energy is controlled by a power distribution controller. The electric accumulator may be charged by a power source on an aircraft, or it may be pre-charged by an external power source.

No. of Pages : 29 No. of Claims : 20

(12) PATENT APPLICATION PUBLICATION
(21) Application No.5124/DELNP/2012 A
(19) INDIA
(22) Date of filing of Application :11/06/2012
(43) Publication Date : 23/10/2015

(54) Title of the invention : MEANS FOR DETECTING LUMINESCENT AND/OR LIGHT-SCATTERING PARTICLES IN FLOWING LIQUIDS

(51) International classification :G01N 15/02
(31) Priority Document No :09015341.2
(32) Priority Date :11/12/2009
(33) Name of priority country :EUROPEAN UNION
(86) International Application No :PCT/EP2010/068998
Filing Date :06/12/2010
(87) International Publication No :WO 2011/069976
(61) Patent of Addition to Application Number :NA
Filing Date :NA
(62) Divisional to Application Number :NA
Filing Date :NA

(71)**Name of Applicant :**
1)BAYER INTELLECTUAL PROPERTY GMBH
Address of Applicant :CREATIVE CAMPUS MONHEIM BLDG. 4865, ALFRED-NOBEL-STR. 10, D 40789 MONHEIM, GERMANY Germany
(72)**Name of Inventor :**
1)CHRISTOPH HERMANSEN

(57) Abstract :
The invention relaes to a probe for detecting luminescent and/or light-scattering particles in flowing liquids, having a measurement cell containing a pipeline channel through which - the liquid to be measured flkwq at least one transparent window in a wall of the pipeline, at least one light source for produGng dimensioned excitation light beam, which excites, through the window, the luminescent and/or the light-scattering particles in the pipeline channel in an optically limited light volume, at least one detector, which records, through the window or through a further window, light emitted by the luminescent and/or the light-scattering particles, wherein the measurement cell is configured such that the dimensioned excitation light beam and the emitted light are orientated such that they are perpendicular to each other and each particle moves rectilinearly within the measurement volume parallel to the liquid stream at a fixed angle to the excitation light. The invention also relates to a method for detecting luminescent and/or light-scattering particles in flowing liquids and to the use of the probe according to the invention and of the method for online monitoring of a production plant, in particular of a plastics production plant or a wastewater treatment plant.

No. of Pages : 27 No. of Claims : 15

(12) PATENT APPLICATION PUBLICATION
(19) INDIA
(22) Date of filing of Application :11/06/2012
(21) Application No.5125/DELNP/2012 A
(43) Publication Date : 23/10/2015

(54) Title of the invention : NOVEL COMPOUNDS AS RECEPTOR MODULATORS WITH THERAPEUTIC UTILITY

(51) International classification :C07D 263/32
(31) Priority Document No :61/264,038
(32) Priority Date :24/11/2009
(33) Name of priority country :U.S.A.
(86) International Application No :PCT/US2010/057361
Filing Date :19/11/2010
(87) International Publication No :WO 2011/066184
(61) Patent of Addition to Application Number :NA
Filing Date :NA
(62) Divisional to Application Number :NA
Filing Date :NA

(71)**Name of Applicant :**
1)ALLERGAN, INC.
Address of Applicant :2525 DUPONT DRIVE, T2-7H, IRVINE, CA 92612, UNITED STATES OF AMERICA U.S.A.
(72)**Name of Inventor :**
1)TODD M. HEIDELBAUGH
2)PHONG X. NGUYEN

(57) Abstract :
The present invention relates to novel amine derivatives, processes for preparing them, pharmaceutical compositions containing them and their use as pharmaceuticals as modulators of sphingosine-I-phosphate receptors.

No. of Pages : 55 No. of Claims : 17

(12) PATENT APPLICATION PUBLICATION
(19) INDIA
(22) Date of filing of Application :11/06/2012
(21) Application No.5126/DELNP/2012 A
(43) Publication Date : 23/10/2015

(54) Title of the invention : PRODUCING LOW METHANE SYNGAS FROM A TWO-STAGE GASIFIER

(51) International classification :C01B 3/02
(31) Priority Document No :61/294,354
(32) Priority Date :12/01/2010
(33) Name of priority country :U.S.A.
(86) International Application No :PCT/US2011/020340
Filing Date :06/01/2011
(87) International Publication No :WO 2011/087951
(61) Patent of Addition to Application Number :NA
Filing Date :NA
(62) Divisional to Application Number :NA
Filing Date :NA

(71)**Name of Applicant :**
1)PHILLIPS 66 COMPANY
Address of Applicant :IP SERVICES GROUP, 600 N. DAIRY ASHFORD, BLDG. ML-2107B, HOUSTON, TEXAS 77079, UNITED STATES OF AMERICA U.S.A.
(72)**Name of Inventor :**
1)SHUNCHENG JI
2)CHANCELOR L. WILLIAMS
3)RON W. HERBANEK

(57) Abstract :
The present disclosure relates generally to a method for obtaining synthesis gas from a gasifier that has a low methane content. The synthesis gas is obtained as an extraction gas from the quench section of the gasifier, and can be utilized as feedstock for a variety of chemical production processes without the need for expensive pre-treatment to remove methane.

No. of Pages : 17 No. of Claims : 15

(12) PATENT APPLICATION PUBLICATION
(19) INDIA
(22) Date of filing of Application :11/06/2012
(21) Application No.5127/DELNP/2012 A
(43) Publication Date : 23/10/2015

(54) Title of the invention : STABILIZED BLENDS CONTAINING FRICTION MODIFIERS

(51) International classification :C10M 141/06
(31) Priority Document No :61/264,871
(32) Priority Date :30/11/2009
(33) Name of priority country :U.S.A.
(86) International Application No :PCT/US2010/056922
Filing Date :17/11/2010
(87) International Publication No :WO 2011/066144
(61) Patent of Addition to Application Number :NA
Filing Date :NA
(62) Divisional to Application Number :NA
Filing Date :NA

(71)**Name of Applicant :**
1)THE LUBRIZOL CORPORATION
Address of Applicant :29400 LAKELAND BOULEVARD, WICKLIFFE,OHIO 44092-2298, UNITED STATES OF AMERICA U.S.A.
(72)**Name of Inventor :**
1)EWAN E. DELBRIDGE
2)JOHN J. MULLAY
3)JAMES D. BURRINGTON
4)JONATHAN S. SHAPRE
5)JOHN W. DUNKERLEY

(57) Abstract :
The present invention relates to functional fluid compositions containing friction modifiers, and specifically stable compositions containing friction modifiers with limited solubility in andlor limited compatibility with the functional fluids with which they are used. In particular the present invention deals with functional fluids used in internal combustion engines, such as engine oils, 10 and friction modifiers derived from hydroxy-carboxylic acids, where the friction modifier is present in the functional fluid composition at levels that would otherwise cause the composition to be unstable andlor hazy.

No. of Pages : 43 No. of Claims : 11

(12) PATENT APPLICATION PUBLICATION
(19) INDIA
(22) Date of filing of Application :17/04/2012
(21) Application No.3318/DELNP/2012 A
(43) Publication Date : 23/10/2015

(54) Title of the invention : 'PLATINUM-PALLADIUM CATALYST WITH INTERMEDIATE LAYER

(51) International classification :H01M 4/92
(31) Priority Document No :NA
(32) Priority Date :NA
(33) Name of priority country :NA
(86) International Application No :PCT/US2009/069562
Filing Date :28/12/2009
(87) International Publication No :WO 2011/081619
(61) Patent of Addition to Application Number :NA
Filing Date :NA
(62) Divisional to Application Number :NA
Filing Date :NA

(71)**Name of Applicant :**
1)UTC POWER CORPORATION
Address of Applicant :195 GOVERNOR'S HIGHWAY, SOUTH WINDSOR, CONNECTICUT 06074, USA U.S.A.
(72)**Name of Inventor :**
1)SHAO MINHUA

(57) Abstract :
A fuel cell catalyst comprises a support having a core arranged on the support. In one example, the core includes palladium nanoparticles. A layer, which is gold in one example, is arranged on the core. A platinum overlayer is arranged on the gold layer. The intermediate gold layer greatly increases the mass activity of the platinum compared to catalysts in which platinum is deposited directly onto the palladium without any intermediate gold layer.

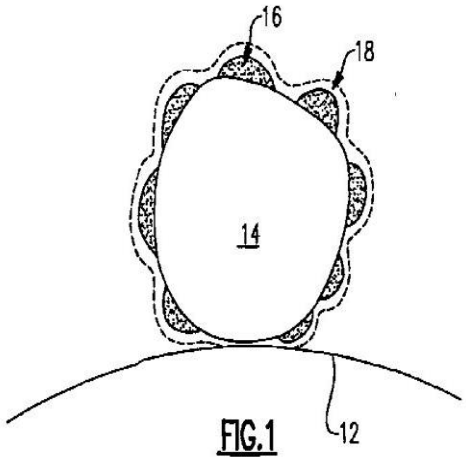

FIG.1

No. of Pages : 13 No. of Claims : 25

(12) PATENT APPLICATION PUBLICATION
(21) Application No.3411/DELNP/2012 A
(19) INDIA
(22) Date of filing of Application :19/04/2012
(43) Publication Date : 23/10/2015

(54) Title of the invention : CONTINUOUS PREPARATION OF CARBONATES

(51) International classification :C07C 68/06
(31) Priority Document No :09171489.9
(32) Priority Date :28/09/2009
(33) Name of priority country :EPO
(86) International Application No :PCT/EP2010/064218
Filing Date :27/09/2010
(87) International Publication No :WO 2011/036281
(61) Patent of Addition to Application Number :NA
Filing Date :NA
(62) Divisional to Application Number :NA
Filing Date :NA

(71)**Name of Applicant :**
1)SOLVAY FLUOR GMBH
Address of Applicant :HANS-BOCKLER-ALLEE 20, 30173 HANNOVER GERMANY Germany
(72)**Name of Inventor :**
1)LAMBERT, ALAIN

(57) Abstract :
A process for the manufacture of fluoroethylene carbonate, difluoroethylene carbonate, fluoromethyl methyl carbonate and difluorinated dimethyl carbonate from ethylene carbonate and dimethyl carbonate and F2 is described wherein the fluorination process is performed continuously.

No. of Pages : 16 No. of Claims : 16

(12) PATENT APPLICATION PUBLICATION
(19) INDIA
(22) Date of filing of Application :19/04/2012
(21) Application No.3412/DELNP/2012 A
(43) Publication Date : 23/10/2015

(54) Title of the invention : MODULAR SYSTEM FOR DATA CENTER

(51) International classification :H05K 5/00
(31) Priority Document No :12/568,323
(32) Priority Date :28/09/2009
(33) Name of priority country :U.S.A.
(86) International Application No :PCT/US2010/050408
Filing Date :27/09/2010
(87) International Publication No :WO 2011/038348
(61) Patent of Addition to Application Number :NA
Filing Date :NA
(62) Divisional to Application Number :NA
Filing Date :NA

(71)**Name of Applicant :**
1)AMAZON TECHNOLOGIES, INC.
Address of Applicant :P.O. BOX 8102, RENO, NEVADA 89507 UNITED STATES OF AMERICA U.S.A.
(72)**Name of Inventor :**
1)CZAMARA, MICHAEL, P.
2)MORALES, OSVALDO, P.

(57) Abstract :
A modular computing system for a data center includes one or more data center modules including rack-mounted computer systems. An electrical module is coupled to the data center modules and provides electrical power to computer systems in the data center modules. One or more air handling modules are coupled to the data center modules. The data center module may include two pre-fabricated portions, each portion including a row of racks of computer systems. The two computing module portions of the data center module may combine to form a computing space when coupled to one another.

No. of Pages : 40 No. of Claims : 15

(12) PATENT APPLICATION PUBLICATION
(19) INDIA
(22) Date of filing of Application :19/04/2012
(21) Application No.3413/DELNP/2012 A
(43) Publication Date : 23/10/2015

(54) Title of the invention : FUEL INJECTOR APPARATUS

(51) International classification :F02M 55/02
(31) Priority Document No :102009055129.8
(32) Priority Date :22/12/2009
(33) Name of priority country :Germany
(86) International Application No :PCT/EP2010/068501
Filing Date :30/11/2010
(87) International Publication No :WO 2011/085858
(61) Patent of Addition to Application Number :NA
Filing Date :NA
(62) Divisional to Application Number :NA
Filing Date :NA

(71)**Name of Applicant :**
1)ROBERT BOSCH GMBH
Address of Applicant :POSTFACH 30 02 20, 70442 STUTTGART, GERMANY Germany
(72)**Name of Inventor :**
1)MAGEL, HANS-CHRISTOPH

(57) Abstract :
Described herein is a fuel injector apparatus (1), particularly for air-sealing, self-igniting internal combustion engines, comprising at least one high-pressure input (12), a first fuel injection valve (2 to 5), and at least one further fuel injection valve (2 to 5). In an embodiment, fuel is conducted at least indirectly into a fuel chamber (18) of the first fuel injection valve (2 to 5) via the high-pressure input (12). The further fuel injection valve (2 to 5) is connected to the first fuel injection valve (2 to 5) via at least one line (7, 8, 9). Also, the fuel is conducted via the line (7, 8, 9) out of the fuel chamber (18) of the first fuel injection valve (2 to 5) into a fuel chamber of the further fuel injection valve (2 to 5).

No. of Pages : 22 No. of Claims : 10

(12) PATENT APPLICATION PUBLICATION
(21) Application No.3414/DELNP/2012 A
(19) INDIA
(22) Date of filing of Application :19/04/2012
(43) Publication Date : 23/10/2015

(54) Title of the invention : MAIN BRAKE CYLINDER FOR A HYDRAULIC VEHICLE BRAKE SYSTEM AND METHOD FOR OPERATING SAME

(51) International classification :B60T 7/02
(31) Priority Document No :10 2009 055 117.4
(32) Priority Date :22/12/2009
(33) Name of priority country :Germany
(86) International Application No :PCT/EP2010/066344
Filing Date :28/10/2010
(87) International Publication No :WO 2011/085836
(61) Patent of Addition to Application Number :NA
Filing Date :NA
(62) Divisional to Application Number :NA
Filing Date :NA

(71)**Name of Applicant :**
1)ROBERT BOSCH GMBH
Address of Applicant :POSTFACH 30 02 20, 70442 STUTTGART, GERMANY Germany
(72)**Name of Inventor :**
1)KUNZ, MICHAEL

(57) Abstract :
Described herein is a main brake cylinder for a hydraulic brake system (1) of a motor vehicle comprising an electric machine (2). The main cylinder (1) comprises two pistons (10, 11) for a brake circuit (II) and a driver mechanism (12), which carries a second piston along with a first piston after displacement of the first (10) of the two pistons on a predefined piston stroke (s), and wherein an effective piston area of both the pistons (10, 11) is greater than an effective piston area of the first piston (10) for forcing out the brake fluid out of the main brake cylinder (3), and a hydraulic accumulator (20), which communicates with the main brake cylinder (3).

No. of Pages : 19 No. of Claims : 7

(12) PATENT APPLICATION PUBLICATION
(21) Application No.5131/DELNP/2012 A
(19) INDIA
(22) Date of filing of Application :11/06/2012
(43) Publication Date : 23/10/2015

(54) Title of the invention : WIRELESS DEVICE EMERGENCY SERVICES CONNECTION AND PANIC BUTTON, WITH CRIME AND SAFETY INFORMATION SYSTEM

(51) International classification :H04W 4/22
(31) Priority Document No :61/260,305
(32) Priority Date :11/11/2009
(33) Name of priority country :U.S.A.
(86) International Application No :PCT/US2010/056629
Filing Date :12/11/2010
(87) International Publication No :WO 2011/060335
(61) Patent of Addition to Application Number :NA
Filing Date :NA
(62) Divisional to Application Number :NA
Filing Date :NA

(71)**Name of Applicant :**
1)LIFESTREAM CORPORATION
Address of Applicant :15137 GILMORE STREET, VAN NUYS, CA 91411, UNITED STATES OF AMERICA U.S.A.
(72)**Name of Inventor :**
1)DANIEL LEE FERGUSON
2)CHARLES LONSTEIN

(57) Abstract :
A system and method for providing a conduit to send hfo-tion to emergemy smices fiom a winless device. Systems and methods for regsterhg an alarm button on a wireless device and sendhg to poblic andlor privatc emergency senices providers information related to the wireless device mcluding ib location, somation abou a ebss device ena user andfor subscriber sociated with the wireless device, and infonnation recordd by one or more wireless devices duMg a d subsequmt to the time me alarm button is activated.

No. of Pages : 66 No. of Claims : 11

(12) PATENT APPLICATION PUBLICATION
(19) INDIA
(22) Date of filing of Application :17/04/2012
(21) Application No.3302/DELNP/2012 A
(43) Publication Date : 23/10/2015

(54) Title of the invention : METHOD AND APPARATUS FOR ACCESSING INTERNET PROTOCOL/LAYER-3 VIRTUAL PRIVATE NETWORK BY LAYER-2 VIRTUAL PRIVATE NETWORK

(51) International classification :H04L 12/46
(31) Priority Document No :200910176181.2
(32) Priority Date :24/09/2009
(33) Name of priority country :China
(86) International Application No :PCT/CN2010/077117
Filing Date :19/09/2010
(87) International Publication No :WO 2011/035703
(61) Patent of Addition to Application Number :NA
Filing Date :NA
(62) Divisional to Application Number :NA
Filing Date :NA

(71)**Name of Applicant :**
1)ZTE CORPORATION
Address of Applicant :ZTE PLAZA, KEJI ROAD SOUTH, HI-TECH INDUSTRIAL PARK, NANSHAN DISTRICT, SHENZHEN, GUANGDONG PROVINCE 518057, P.R. CHINA China
(72)**Name of Inventor :**
1)PENGJUN WANG

(57) Abstract :
The present invention provides a method for accessing an Internet Protocol (IP)/Layer-3 Virtual Private Network (L3VPN) by a Layer-2 Virtual Private Network (L2VPN), wherein the method comprises the following steps: an entry table is established in, a Bridge Provider Edge (PE), wherein, the entry table stores the Virtual Forwarding Instance (VFI) corresponding to the L2VPN network, the VPN Routing and Forwarding Instance (VRF) corresponding to the IP/L3VPN network, and the correspondence between the VFI and the VRF; a data message is received by the Bridge PE; and the data message is routed by the Bridge PE according to the VFI, the VRF, and/or the correspondence between the VFI and the VRF stored in the entry table. The present invention further provides a apparatus for accessing the IP/L3VPN network by the L2VPN network. The present invention, needing only one action, enables the data message to be forwarded on the Bridge PE, thereby shortening the procedure of processing the data message by the Bridge PE and improving the forwarding performance.

No. of Pages : 25 No. of Claims : 12

(12) PATENT APPLICATION PUBLICATION
(19) INDIA
(22) Date of filing of Application :19/04/2012
(21) Application No.3400/DELNP/2012 A
(43) Publication Date : 23/10/2015

(54) Title of the invention : FLAME RESISTANT TEXTILE

(51) International classification :B32B 27/12
(31) Priority Document No :61/274,133
(32) Priority Date :21/10/2009
(33) Name of priority country :U.S.A.
(86) International Application No :PCT/US2010/049637
Filing Date :21/09/2010
(87) International Publication No :WO 2011/049700
(61) Patent of Addition to Application Number :NA
Filing Date :NA
(62) Divisional to Application Number :NA
Filing Date :NA

(71)**Name of Applicant :**
1)MILLIKEN & COMPANY
Address of Applicant :920 MILLIKEN ROAD, M-495, SPARTANBURG, SOUTH CAROLINA, 29303, USA U.S.A.
(72)**Name of Inventor :**
1)JAMES D. CLIVER
2)JAMES TRAVIS GREER
3)CANDACE W. STURCKEN
4)SAMUEL M. CAUDELI
5)SHULONG LI

(57) Abstract :
A flame resistant textile is provided. The textile is a sateen weave fabric containing cellulosic fibers, where the sateen weave fabric has a thickness of at least 19.5 mils, a thickness of at least 25 mils after 3 home washes at 120°F, an air permeability of at least 60 cfm, and a weight of less than about 7 oz/yd2. The sateen weave fabric also contains a treatment, where the treatment contains a tetramethylhydroxy phosphonium salt or its condensate and chemical selected from the group consisting of urea, guanidines, guanyl urea, glycoluril, and polyamines. When the sateen weave fabric to which the treatment has been applied has been heat-cured and oxidized at least a portion of the cellulosic fibers have a pentavalent phosphate compound polymerized therein. The method for producing the flame resistant textile is also provided.

No. of Pages : 44 No. of Claims : 30

(12) PATENT APPLICATION PUBLICATION
(21) Application No.5145/DELNP/2012 A
(19) INDIA
(22) Date of filing of Application :11/06/2012
(43) Publication Date : 23/10/2015

(54) Title of the invention : COMPOSITIONS FOR INCREASING POLYPEPTIDE STABILITY AND ACTIVITY, AND RELATED METHODS

(51) International classification :C12N 9/00
(31) Priority Document No :61/262,919
(32) Priority Date :19/11/2009
(33) Name of priority country :U.S.A.
(86) International Application No :PCT/IB2010/003127
Filing Date :19/11/2010
(87) International Publication No :WO 2011/061625
(61) Patent of Addition to Application Number :NA
Filing Date :NA
(62) Divisional to Application Number :NA
Filing Date :NA

(71)**Name of Applicant :**
1)SOLIS BIODYNE
Address of Applicant :RIIA 185A, EE-51014 TARTU, ESTONIA Estonia
(72)**Name of Inventor :**
1)KAHRE, OLEV
2)ARTMA, KADRI
3)KAHRE, TIINA

(57) Abstract :
This disclosure provides peptides, polypeptides, fusion polypeptides, compositions, and methods for enhancing or increasing the stability of a polypeptide (e.g., Taq polymerase). Such peptides, polypeptides, fusion polypeptides, or compositions include polypeptides linked to a peptide tag that enhances the stability of the polypeptide. The peptides, polypeptides, fusion polypeptides, compositions may also enhance the activity, specificity, andor fidelity of other polypeptides in a reaction mixture. The disclosure also provides methods of using such peptides, polypeptides, fusion polypeptides, compositions.

No. of Pages : 123 No. of Claims : 75

(12) PATENT APPLICATION PUBLICATION
(19) INDIA
(22) Date of filing of Application :11/06/2012
(21) Application No.5146/DELNP/2012 A
(43) Publication Date : 23/10/2015

(54) Title of the invention : 3-COORDINATE COPPER (I) - CARBENE COMPLEXES

(51) International classification :C07F 1/08
(31) Priority Document No :61/262,804
(32) Priority Date :19/11/2009
(33) Name of priority country :U.S.A.
(86) International Application No :PCT/US2010/057169
Filing Date :18/11/2010
(87) International Publication No :WO 2011/063083
(61) Patent of Addition to Application Number :NA
Filing Date :NA
(62) Divisional to Application Number :NA
Filing Date :NA

(71)**Name of Applicant :**
1)THE UNIVERSITY OF SOUTHERN CALIFORNIA
Address of Applicant :USC STEVENS INSTITUTE FOR INNOVATION, 3740 MCCLINTOCK AVE., HUGHES CENTER, SUITE EEB 131, LOS ANGELES, CA 90089, UNITED STATES OF AMERICA U.S.A.
(72)**Name of Inventor :**
1)THOMPSON, MARK
2)DJUROVICH, PETER
3)KRYLOVA, VALENTINA

(57) Abstract :
Novel phosphorescent trigonal copper carbene complexes are provided. The complex comprise a carbene ligand coordinated to a three coordinate copper atom. The complex may be used in organic light emitting devices. In particular, the complexes may be especially useful in OLEDs used for lighting applications.

No. of Pages : 173 No. of Claims : 143

(12) PATENT APPLICATION PUBLICATION
(21) Application No.5147/DELNP/2012 A
(19) INDIA
(22) Date of filing of Application :11/06/2012
(43) Publication Date : 23/10/2015

(54) Title of the invention : TISSUE CLOSURE DEVICES, DEVICE AND SYSTEMS FOR DELIVERY, KITS AND METHODS THEREFOR

(51) International classification :A61B 17/04
(31) Priority Document No :61/280,896
(32) Priority Date :09/11/2009
(33) Name of priority country :U.S.A.
(86) International Application No :PCT/US2010/056059
Filing Date :09/11/2010
(87) International Publication No :WO 2011/057282
(61) Patent of Addition to Application Number :NA
Filing Date :NA
(62) Divisional to Application Number :NA
Filing Date :NA

(71)**Name of Applicant :**
1)CARDIOVASCULAR TECHNOLOGIES, INC.
Address of Applicant :1787 VERDITE STREET LIVERMORE, CALIFORNIA 94550, U.S.A. U.S.A.
(72)**Name of Inventor :**
1)HOUSER, RUSSELL, A.
2)BOWER, JOHN, HUNTER

(57) Abstract :
This invention relates to tissue closure devices, devices and systems for delivery, kits and methods therefore. The tissue closure devices can achieve tissue closure in lieu of compression and can be configured to be quickly deployable by an introducer or from outside the body.

No. of Pages : 177 No. of Claims : 29

(12) PATENT APPLICATION PUBLICATION
(19) INDIA
(22) Date of filing of Application :20/04/2012
(21) Application No.3437/DELNP/2012 A
(43) Publication Date : 23/10/2015

(54) Title of the invention : REGISTERED BANDED CIGARETTE PAPER, CIGARETTES, AND METHOD OF MANUFACTURE

(51) International classification :A24D 1/02
(31) Priority Document No :12/615,700
(32) Priority Date :10/11/2009
(33) Name of priority country :U.S.A.
(86) International Application No :PCT/EP2010/006756
Filing Date :05/11/2010
(87) International Publication No :WO 2011/057743
(61) Patent of Addition to Application Number :NA
Filing Date :NA
(62) Divisional to Application Number :NA
Filing Date :NA

(71)**Name of Applicant :**
1)PHILIP MORRIS PRODUCTS S.A.
Address of Applicant :QUAI JEANRENAUD 3, CH-2000 NEUCHATEL (CH) Switzerland
(72)**Name of Inventor :**
1)SHERWOOD, TIMOTHY SCOTT
2)GILL, TEJINDER, K.

(57) Abstract :
A registrable banded wrapper (23) for a smoking article (20) is disclosed. The banded regions (32) are spaced from each other by distance equal to the length of the tobacco rod of the smoking article divided by an integer. This results in banded regions which begin at substantially the same location on each cigarette. Each banded region is thus positioned at a preferred predetermined distance from the end of the cigarette; cigarettes made with such paper exhibit a consistent and improved ignition propensity compared with random or quasi-randomly positioned banded regions. Cigarettes made with the registrable banded wrapper are disclosed and methods of making cigarettes with the registrable banded paper are dislcosed.

No. of Pages : 17 No. of Claims : 7

(12) PATENT APPLICATION PUBLICATION
(19) INDIA
(22) Date of filing of Application :20/04/2012

(21) Application No.3438/DELNP/2012 A
(43) Publication Date : 23/10/2015

(54) Title of the invention : ALLOCATION OF FREQUENCY SPECTRUM IN SPECTRUM-ON-DEMAND SYSTEMS

(51) International classification :H04W 72/04
(31) Priority Document No :NA
(32) Priority Date :NA
(33) Name of priority country :NA
(86) International Application No :PCT/SE2009/051388
Filing Date :08/12/2009
(87) International Publication No :WO 2011/071424
(61) Patent of Addition to Application Number :NA
Filing Date :NA
(62) Divisional to Application Number :NA
Filing Date :NA

(71)**Name of Applicant :**
1)TELEFONAKTIEBOLAGET LM ERICSSON (PUBL)
Address of Applicant :SE-164 83 STOCKHOLM (SE) Sweden
(72)**Name of Inventor :**
1)SACHS, JOACHIM
2)IRNICH, TIM

(57) Abstract :
Disclosed herein is a method and a Radio Resource Management arrangement in a wireless communication system for allocating communication of one or several services to at least one of several available frequency spectrum resources. The method comprises the steps of categorizing said available frequency spectrum resources with respect to volatility, and categorizing said one or several services with respect to compressibility, and assigning said one or several services to the available spectrum resources such that compressible services are assigned to volatile spectrum resources.

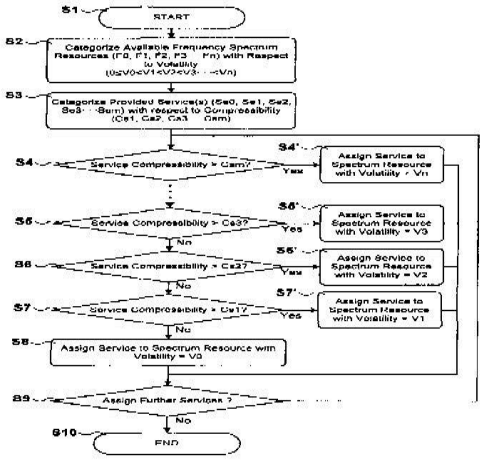

Fig. 3

No. of Pages : 34 No. of Claims : 12

(12) PATENT APPLICATION PUBLICATION
(21) Application No.3439/DELNP/2012 A
(19) INDIA
(22) Date of filing of Application :20/04/2012
(43) Publication Date : 23/10/2015

(54) Title of the invention : A METHOD FOR ASSESSING A PATIENT'S FLUID STATUS AND/OR SENSITIVITY TO FLUID REMOVAL, CONTROLLER, AND DEVICES

(51) International classification :A61B 5/26
(31) Priority Document No :09013356.2
(32) Priority Date :22/10/2009
(33) Name of priority country :EPO
(86) International Application No :PCT/EP2010/006433
Filing Date :21/10/2010
(87) International Publication No :WO 2011/047859
(61) Patent of Addition to Application Number :NA
Filing Date :NA
(62) Divisional to Application Number :NA
Filing Date :NA

(71)**Name of Applicant :**
1)FRESENIUS MEDICAL CARE DEUTSCHLAND GMBH
Address of Applicant :ELSE-KRONER-STRAE 1, 61352 BAD HOMBURG (DE) Germany
(72)**Name of Inventor :**
1)CHAMNEY, PAUL
2)MOISSL, ULRICH
3)WABEL, PETER
4)NIER, VOLKER
5)WIESKOTTEN, SEBASTIAN

(57) Abstract :
The present invention relates to a method for assessing a patients sensitivity to fluid removal from his vascular system or to fluid replacement or addition regarding to his hydration state, the method comprising the step of determining a value reflecting the distribution of fluid between at least two distribution spaces of the body of the patient or changes thereof from measured or calculated values, and assessing whether the value fulfils at least one criterion. It also relates to a controller, an apparatus, a device, a digital storage means, a computer program product, and a computer program.

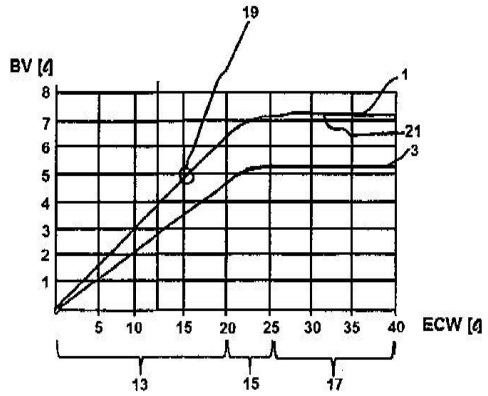

FIG. 1

No. of Pages : 35 No. of Claims : 26

(12) PATENT APPLICATION PUBLICATION
(19) INDIA
(22) Date of filing of Application :11/06/2012
(21) Application No.5155/DELNP/2012 A
(43) Publication Date : 23/10/2015

(54) Title of the invention : MODULATOR CONTROL SYSTEM AND METHOD IN AN OPTICAL NETWORK

(51) International classification :H04B 10/155
(31) Priority Document No :09175739.3
(32) Priority Date :12/11/2009
(33) Name of priority country :EUROPEAN UNION
(86) International Application No :PCT/EP2010/067416
Filing Date :12/11/2010
(87) International Publication No :WO 2011/058150
(61) Patent of Addition to Application Number :NA
Filing Date :NA
(62) Divisional to Application Number :NA
Filing Date :NA

(71)**Name of Applicant :**
1)INTUNE NETWORKS LIMITED
Address of Applicant :9B BECKETT WAY, PARKWEST BUSINESS PARK, DUBLIN 12, IRELAND Ireland
(72)**Name of Inventor :**
1)RICHARD OBERLAND

(57) Abstract :
Abstract:The invention relates to an optical modulator control system implemented in an optical burst mode transmitter, saiL trosly stem comprising means for measuring a plurality of optical power sample values and associated optical wavelength a values from a modulator at a first sampling rate, wherein an average power table is generated fiom said values for each samriod and stored in a memory. The control system also comprises means for performing a control error calculation fiom two re stored average power tables at a second sampling rate to calculate a single error value to provide gain and/or bias control s, wherein the second sample rate is sampled at a slower rate than the furst sample rate. The control system described optithe modulator performance over temperature and lifetime in an optical network.

No. of Pages : 36 No. of Claims : 21

(12) PATENT APPLICATION PUBLICATION
(19) INDIA
(22) Date of filing of Application :11/06/2012
(21) Application No.5156/DELNP/2012 A
(43) Publication Date : 23/10/2015

(54) Title of the invention : INTRODUCTION OF APOMIXIS IN SEXUALLY REPRODUCING CULTIVATED PLANTS AND USE FOR PRODUCING TOTALLY OR PARTIALLY APOMICTIC PLANTS

(51) International classification :C12N 15/82
(31) Priority Document No :09/05375
(32) Priority Date :09/11/2009
(33) Name of priority country :France
(86) International Application No :PCT/IB2010/055084
Filing Date :09/11/2010
(87) International Publication No :WO 2011/055352
(61) Patent of Addition to Application Number :NA
Filing Date :NA
(62) Divisional to Application Number :NA
Filing Date :NA

(71)**Name of Applicant :**
1)INSTITUT DE RECHERCHE POUR LE DEVELOPPEMENT (IRD)
Address of Applicant :IMMEUBLE LE SEXTANT, 44 BD DE DUNKERQUE -CS 90009, F-13572, MARSEILLE CEDEX 02, FRANCE France
(72)**Name of Inventor :**
1)DANIEL GRIMANELLI
2)OLIVIER LEBLANC
3)MARCELINA GARCIA AGUILAR

(57) Abstract :
The invention relates to the use, for producing partially or totally apomictic plants, of a gene, of a transcript of this gene, or of the ORF I thereof, encoding a protein comprising a DNA methyltransferase motif.

No. of Pages : 105 No. of Claims : 9

(12) PATENT APPLICATION PUBLICATION
(19) INDIA
(22) Date of filing of Application :11/06/2012
(21) Application No.5132/DELNP/2012 A
(43) Publication Date : 23/10/2015

(54) Title of the invention : VEHICLE SEAT

(51) International classification :B60N 2/235
(31) Priority Document No :10 2010 014 058.9
(32) Priority Date :01/04/2010
(33) Name of priority country :Germany
(86) International Application No :PCT/EP2011/001007
Filing Date :02/03/2011
(87) International Publication No :WO 2011/120612
(61) Patent of Addition to Application Number :NA
Filing Date :NA
(62) Divisional to Application Number :NA
Filing Date :NA

(71)**Name of Applicant :**
1)KEIPER GMBH & CO. KG
Address of Applicant :HERTELSBRUNNENRING 2, 67657 KAISERSLAUTERN, GERMANY Germany
(72)**Name of Inventor :**
1)STEFAN SCHEHL
2)JOACHIM KAMMERER

(57) Abstract :
The invention relates to a vehicle seat (1) having a base (2), a seat structure (6) supporting a seat surface (5), and a plurality of coupling elements (a, b, c, d, e, f, g) allowing height adjusting and tilt adjusting of the seat surface (5) relative to the base (2), wherein the height adjusting takes place by means of a six-member seven-way linkage having six pivots, wherein the angular orientation of two adjacent coupling elements (e and f) relative to each other in a first liiage (ef) can be changed by means of a first fitting (lo), and the angular orientation of two adjacent coupling elements (d and e) relative to each other is fxed at a second linkage (de) by a second fitting (1 l), and the angle adjusting takes place by means of the six-member seven-way linkage having six pivots, formed by the seven coupling elements (a, b, c, d, e, f, g), wherein the angular orientation of said two adjacent coupling elements (e and f) relative to each other at the first linkage (ef) can be set via a first fitting (lo), and the angular orientation of said two adjacent coupling elements (d and e) relative to each other at the second linkage (de) can be changed by a second fitting (11).

No. of Pages : 15 No. of Claims : 9

(12) PATENT APPLICATION PUBLICATION
(19) INDIA
(22) Date of filing of Application :11/06/2012
(21) Application No.5133/DELNP/2012 A
(43) Publication Date : 23/10/2015

(54) Title of the invention : METHOD AND DEVICE FOR PROVIDING REDUCTION GAS FROM GENERATOR GAS

(51) International classification :C21B 13/14
(31) Priority Document No :A2035/2009
(32) Priority Date :23/12/2009
(33) Name of priority country :Austria
(86) International Application No :PCT/EP2010/067616
Filing Date :17/11/2010
(87) International Publication No :WO 2011/076489
(61) Patent of Addition to Application Number :NA
Filing Date :NA
(62) Divisional to Application Number :NA
Filing Date :NA

(71)**Name of Applicant :**
1)SIEMENS VAI METALS TECHNOLOGIES GMBH
Address of Applicant :TURMSTRAE 44, A-4031 LINZ, AUSTRIA Austria
(72)**Name of Inventor :**
1)ROBERT MILLNER
2)JOSEF STOCKINGER
3)JOHANN WURM

(57) Abstract :
The present invention relates to a method for providing reduction gas for iron ore reduction by cooling and dry dedusting generator gas (20) produced in a melter gasifier (3) for pig iron production, and also to a device for carrying out the method. In this case, the generator gas (20) is cooled both by water injection and by heat exchange after it has been discharged from the melter gasifier (3) and before the dry dedusting thereof.

No. of Pages : 35 No. of Claims : 14

(12) PATENT APPLICATION PUBLICATION
(21) Application No.5135/DELNP/2012 A
(19) INDIA
(22) Date of filing of Application :11/06/2012
(43) Publication Date : 23/10/2015

(54) Title of the invention : ELECTRONIC INVERTER WITH PROTECTION FOR DISCHARGES PRODUCED BY MALFUNCTIONING IN GAS DISCHARGE OR FLUORESCENT LAMPS AT THE END OF THE SERVICE LIFE THEREOF

(51) International classification :H05B 41/285
(31) Priority Document No :MX/A/2009/012150
(32) Priority Date :10/11/2009
(33) Name of priority country :Mexico
(86) International Application No :PCT/MX2010/000041
Filing Date :20/05/2010
(87) International Publication No :WO 2011/059304
(61) Patent of Addition to Application Number :NA
Filing Date :NA
(62) Divisional to Application Number :NA
Filing Date :NA

(71)**Name of Applicant :**
1)ARENA OCHOA, GUIDO
Address of Applicant :CALLE COLINA DE LA IIUSION NO. 49, COL. FRACCIONAMIENTO BULEVARES, C.P. 53140 NAUCALPAN, ESTADO DE MEXICO (MX) Mexico
(72)**Name of Inventor :**
1)ARENA OCHOA, GUIDO

(57) Abstract :
A full-wave electronic inverter for supplying one or more low-pressure gas discharge or fluorescent lamps, which inverter is protected by a circuit containing a small tubular-core saturable transformer which has the inductive reactance necessary and sufficient for deflecting, from the circuit thereof, the asymmetrical waves which are at a frequency higher than the frequencies stipulated by design and are produced by said lamps at the end of the service life thereof, preventing the inverter from burning out, as occurs with inverters of that type which do not have said circuit which also enables the situation in which, although the inverter is still being connected to the supply circuit, the inverter does not consume energy, even though said lamp or lamps islare connected to the circuit thereof, until said lamps are replaced with new lamps. This inverter has a starting button which is used to deenergize the inverter each time the latter operates for the first time with new lamps.

No. of Pages : 18 No. of Claims : 7

(12) PATENT APPLICATION PUBLICATION
(19) INDIA
(22) Date of filing of Application :11/06/2012
(21) Application No.5136/DELNP/2012 A
(43) Publication Date : 23/10/2015

(54) Title of the invention : A HIGH POWER ELECTRICAL DISTRIBUTION SYSTEM

(51) International classification :H01F 38/18
(31) Priority Document No :NA
(32) Priority Date :NA
(33) Name of priority country :NA
(86) International Application No :PCT/SE2009/051435
Filing Date :16/12/2009
(87) International Publication No :WO 2011/075021
(61) Patent of Addition to Application Number :NA
Filing Date :NA
(62) Divisional to Application Number :NA
Filing Date :NA

(71)**Name of Applicant :**
1)SAAB AB
Address of Applicant :S-581 88 LINKOPING, SWEDEN Sweden
(72)**Name of Inventor :**
1)DERMARK, DANIEL

(57) Abstract :
The object of the present invention is to provide an inventive high power electrical distribution system for distribution high power to at feast one consumer (12) arranged on a rotatable element (3), wherein said distribution system comprises: at least one high frequency alternating current HFAC generator (4) configured to generate HFAC, a rotary power transformer (2) connected to said at least one HFAC generator (4), wherein said rotary power I transformer (2) includes a stationary part (7) and a rotatable part (8), and is configured to receive HFAC from said at least one HFAC generator (4), and to I couple HFAC electrical energy from said stationary part (7) to said rotatable part (8), and at least one high power distribution bus (11) located on said rotatable element (I), and configured to receive HFAC from said rotary power transformer (2) and to distribute HFAC to said at least one consumer (12).

No. of Pages : 17 No. of Claims : 8

(12) PATENT APPLICATION PUBLICATION
(21) Application No.3422/DELNP/2012 A
(19) INDIA
(22) Date of filing of Application :19/04/2012
(43) Publication Date : 23/10/2015

(54) Title of the invention : VEHICLE WHEEL DISK

(51) International classification :B60B 3/04
(31) Priority Document No :2009-255982
(32) Priority Date :09/11/2009
(33) Name of priority country :Japan
(86) International Application No :PCT/JP2010/069890
Filing Date :09/11/2010
(87) International Publication No :WO 2011/055839
(61) Patent of Addition to Application Number :NA
Filing Date :NA
(62) Divisional to Application Number :NA
Filing Date :NA

(71)**Name of Applicant :**
1)TOPY KOGYO KABUSHIKI KAISHA
Address of Applicant :2-2, OSAKI 1-CHOME, SHINAGAWA-KU, TOKYO 141-8634 JAPAN. Japan
(72)**Name of Inventor :**
1)NAKAYAMA KAZUHISA
2)BOJO MASAFUMI
3)OGURA TAKESHI

(57) Abstract :
A vehicle wheel disk includes a hat portion having a crest portion 15a extending continuously in a circumferential direction of the disk, an inner curved portion 15d curved inwardly in an axial direction of the disk radially inside the crest portion 15a and extending continuously in a circumferential direction of the disk, and an outer curved portion 15c curved inwardly in the axial direction of the disk radially outside the crest portion 15a and extending in the circumferential direction of the disk. When viewed in the axial direction of the disk, the hat portion 15 having the crest portion 15a and the inner curved portion 15d continuous in the circumferential direction of the disk is wavy in shape.

No. of Pages : 57 No. of Claims : 9

(12) PATENT APPLICATION PUBLICATION
(21) Application No.3423/DELNP/2012 A
(19) INDIA
(22) Date of filing of Application :19/04/2012
(43) Publication Date : 23/10/2015

(54) Title of the invention : CAM SPROCKET AND METHOD FOR MANUFACTURING THE SAME

(51) International classification :F01L 1/02
(31) Priority Document No :2010-178086
(32) Priority Date :06/08/2010
(33) Name of priority country :Japan
(86) International Application No :PCT/JP2011/004052
Filing Date :15/07/2011
(87) International Publication No :WO 2012/017608
(61) Patent of Addition to Application Number :NA
Filing Date :NA
(62) Divisional to Application Number :NA
Filing Date :NA

(71)**Name of Applicant :**
1)TOYOTA JIDOSHA KABUSHIKI KAISHA
Address of Applicant :1, TOYOTA-CHO, TOYOTA-SHI, AICHI 471-8571, JAPAN Japan
(72)**Name of Inventor :**
1)KIDA KOJI

(57) Abstract :
A cam sprocket according to the present invention includes a ring-shaped plate portion having external teeth along its outer circumference; a circular plate portion that is disposed at the radially inner region substantially parallel to the ring-shaped plate portion and at a level difference in axial direction to the ring-shaped plate portion, the circular plate portion being abuttable against one end face in axial direction of the cam shaft; and a tapered portion linking the circular plate portion to the ring-shaped portion at a radially intermediate region. The tapered portion is provided with a plurality of punched portions whose radially inner faces are provided with a partial circular arc shape so as to come into area contact with an outer circumferential surface at the one end face in axial direction of the cam shaft.

No. of Pages : 25 No. of Claims : 3

(12) PATENT APPLICATION PUBLICATION
(19) INDIA
(22) Date of filing of Application :11/06/2012
(21) Application No.5140/DELNP/2012 A
(43) Publication Date : 23/10/2015

(54) Title of the invention : DEVICE FOR SECURING A MODULE UNIT TO A SUPPORT RAIL

(51) International classification :H02B 1/052
(31) Priority Document No :10 2009 059 014.5
(32) Priority Date :17/12/2009
(33) Name of priority country :Germany
(86) International Application No :PCT/EP2010/006715
Filing Date :04/11/2010
(87) International Publication No :WO 2011/082725
(61) Patent of Addition to Application Number :NA
Filing Date :NA
(62) Divisional to Application Number :NA
Filing Date :NA

(71)**Name of Applicant :**
1)PHOENIX CONTACT GMBH & CO. KG
Address of Applicant :FLACHSMARKSTRAE 8, 32825 BLOMBERG, GERMANY Germany
(72)**Name of Inventor :**
1)SOFKER, JORG

(57) Abstract :
The invention relates to a device for securing a module unit (10) comprising a receiving element (16) for receiving one or more circuit boards and lateral elements (18) closing the receiving element (16), to a support rail (14), said device comprising a securing unit (12) is mounted in a displaceble manner on said module unit (10) for joining the module unit (10) to the support rail (14).

No. of Pages : 10 No. of Claims : 6

(12) PATENT APPLICATION PUBLICATION
(21) Application No.5141/DELNP/2012 A
(19) INDIA
(22) Date of filing of Application :11/06/2012
(43) Publication Date : 23/10/2015

(54) Title of the invention : AUSTENITIC STAINLESS STEEL PIPE EXCELLENT IN STEAM OXIDATION RESISTANCE AND MANUFACTURING METHOD THEREFOR

(51) International classification :C22C 38/00
(31) Priority Document No :2010-131613
(32) Priority Date :09/06/2010
(33) Name of priority country :Japan
(86) International Application No :PCT/JP2011/061478
Filing Date :19/05/2011
(87) International Publication No :WO 2011/155296
(61) Patent of Addition to Application Number :NA
Filing Date :NA
(62) Divisional to Application Number :NA
Filing Date :NA

(71)**Name of Applicant :**
1)Sumitomo metal Industries, Ltd.
Address of Applicant :5-33, kitahama 4-chome chuo-ku, osaka-shi osaka 541-0041, japan Japan
(72)**Name of Inventor :**
1)NISHIYAMA, YOSHITAKA
2)YOSHIZAWA, MITSURU
3)SETO, MASAHIRO
4)TANAKA, KATSUKI

(57) Abstract :
According to the present invention, scale that is excellent in protectability can be formed uniformly on the surface of a steel pipe at the initial stage of usage, and steam oxidation is less liable to occur under the usage condition at a high temperature exceeding 600°C, especially even under the usage condition at a high temperature close to 700°C. Thus, the austenitic stainless steel pipe of the present invention is excellent in steam oxidation resistance, and therefore is suitable for being used in high-temperature environments such as boilers.

No. of Pages : 29 No. of Claims : 4

(12) PATENT APPLICATION PUBLICATION
(19) INDIA
(22) Date of filing of Application :11/06/2012
(21) Application No.5142/DELNP/2012 A
(43) Publication Date : 23/10/2015

(54) Title of the invention : CRYSTALLINE FORMS OF NEUROTROPHIN MIMETIC COMPOUNDS AND THEIR SALTS

(51) International classification :A61K 31/535
(31) Priority Document No :61/260,671
(32) Priority Date :12/11/2009
(33) Name of priority country :U.S.A.
(86) International Application No :PCT/US2010/056537
Filing Date :12/11/2010
(87) International Publication No :WO 2011/060262
(61) Patent of Addition to Application Number :NA
Filing Date :NA
(62) Divisional to Application Number :NA
Filing Date :NA

(71)**Name of Applicant :**
1)PHARMA TROPHIX, INC
Address of Applicant :2198 STERLING AVENUE MENLO PARK, CALIFORNIA 94025, UNITED STATES OF AMERICA U.S.A.
(72)**Name of Inventor :**
1)MUNIGETI, RAJGOPAL
2)LONGO, FRANK M.

(57) Abstract :
The present invention includes crystalline forms of 2-amino-3-methyl-N-(2-morpholinoethy1)- pentanamide and crystalline forms of salts and/or solvates of 2-amino-3-methyl-N-(2- morpholinoethy1)-pentanamide. Furthermore, the present invention provides compositions comprising the crystalline forms and therapeutic use of the crystalline forms.

No. of Pages : 131 No. of Claims : 66

(12) PATENT APPLICATION PUBLICATION
(19) INDIA
(22) Date of filing of Application :16/04/2012
(21) Application No.3257/DELNP/2012 A
(43) Publication Date : 23/10/2015

(54) Title of the invention : COMPOSITION AND METHOD FOR TREATMENT OF DIABETES

(51) International classification :A61K 38/22
(31) Priority Document No :61/245,036
(32) Priority Date :23/09/2009
(33) Name of priority country :U.S.A.
(86) International Application No :PCT/US2010/049843
Filing Date :22/09/2010
(87) International Publication No :WO 2011/038014
(61) Patent of Addition to Application Number :NA
Filing Date :NA
(62) Divisional to Application Number :NA
Filing Date :NA

(71)**Name of Applicant :**
1)BIOKIER, INC.
Address of Applicant :105 GREEN WILLOW CT., CHAPEL HILL, NC 27514, UNITED STATES U.S.A.
(72)**Name of Inventor :**
1)SZEWCZYK, JERZY, RYSZARD

(57) Abstract :
The present invention relates to a method of treating an incretin related disease such as diabetes, obesity and the like by delivery of butyric acid, bile acid, long chain fatty acid or glutamine to the colon by bypassing the upper digestive tract. The composition is combined either by the same or different route of administration with a monoamine reuptake inhibitor such as buproprion.

No. of Pages : 30 No. of Claims : 21

(12) PATENT APPLICATION PUBLICATION
(19) INDIA
(22) Date of filing of Application :16/04/2012
(21) Application No.3259/DELNP/2012 A
(43) Publication Date : 23/10/2015

(54) Title of the invention : A LED DISPLAY SYSTEM

(51) International classification :H05B 33/08
(31) Priority Document No :2009904486
(32) Priority Date :16/09/2009
(33) Name of priority country :Australia
(86) International Application No :PCT/AU2010/001210
Filing Date :16/09/2010
(87) International Publication No :WO 2011/032220
(61) Patent of Addition to Application Number :NA
Filing Date :NA
(62) Divisional to Application Number :NA
Filing Date :NA

(71)**Name of Applicant :**
1)ELECTRONIC RESEARCH PTY LTD
Address of Applicant :UNIT 13, 25, STODDART ROAD, PROSPECT, NSW 2148, AUSTRALIA. Australia
(72)**Name of Inventor :**
1)MICHAEL SICK CHEONG TSANG {DECEASED}
2)BEN TSANG {SOLE HEIR OF DECEASED}

(57) Abstract :
The present invention relates to a LED display system (10) including a panel (12) and detecting means (20) The LED display system (10) also includes means (14) for selectively varying power supply to the panel (12). The panel (12) has an array of LEDs. The detecting means (20) is adapted to activate or deactivate one or more of the LEDs.

No. of Pages : 16 No. of Claims : 23

(12) PATENT APPLICATION PUBLICATION
(19) INDIA
(22) Date of filing of Application :18/04/2012
(21) Application No.3361/DELNP/2012 A
(43) Publication Date : 23/10/2015

(54) Title of the invention : MICROPARTICLE COMPOSITIONS AND METHODS FOR TREATING AGE-RELATED MACULAR DEGENERATION

(51) International classification :A61K 9/16
(31) Priority Document No :61/247,849
(32) Priority Date :01/10/2009
(33) Name of priority country :U.S.A.
(86) International Application No :PCT/US2010/051068
Filing Date :01/10/2010
(87) International Publication No :WO 2011/041642
(61) Patent of Addition to Application Number :NA
Filing Date :NA
(62) Divisional to Application Number :NA
Filing Date :NA

(71)**Name of Applicant :**
1)EVONIK DEGUSSA CORPORATION
Address of Applicant :299 JEFFERSON ROAD, PARSIPPANY, NJ 07054 U.S.A. U.S.A.
(72)**Name of Inventor :**
1)NETTLES HEATHER
2)STELLA ANGELA

(57) Abstract :
Disclosed herein are pharmaceutical compositions comprising microparticles of ranibizumab that are useful for treating or preventing age-related macular degeneration. Also disclosed herein are microparticles that can be used to treat or prevent macular angiogenesis. Further disclosed are methods of making the microparticles and compositions and methods for treating or preventing macular degeneration and diseases, illnesses, or conditions relating to increased or abnormal macular angiogenesis.

No. of Pages : 88 No. of Claims : 118

(12) PATENT APPLICATION PUBLICATION
(21) Application No.3362/DELNP/2012 A
(19) INDIA
(22) Date of filing of Application :18/04/2012
(43) Publication Date : 23/10/2015

(54) Title of the invention : HUMANIZED ANTIBODIES AGAINST HUMAN IL-22RA

(51) International classification :A61K 39/395
(31) Priority Document No :09176525.5
(32) Priority Date :19/11/2009
(33) Name of priority country :EPO
(86) International Application No :PCT/EP2010/067332
Filing Date :12/11/2010
(87) International Publication No :WO 2011/061119
(61) Patent of Addition to Application Number :NA
Filing Date :NA
(62) Divisional to Application Number :NA
Filing Date :NA

(71)**Name of Applicant :**
1)MERCK SERONO S.A.
Address of Applicant :CENTRE INDUSTRIEL, 1267 COINSINS, SWITZERLAND Switzerland
(72)**Name of Inventor :**
1)BECKMANN ROLAND
2)JOHNSON-LEGER CAROLINE

(57) Abstract :
The invention relates to humanized antibodies against human IL-22RA and to their use in the treatment of psoriasis and other immune-mediated diseases such as psoriatic arthritis and atopic dermatitis.

No. of Pages : 73 No. of Claims : 19

(12) PATENT APPLICATION PUBLICATION
(19) INDIA
(22) Date of filing of Application :18/04/2012
(21) Application No.3363/DELNP/2012 A
(43) Publication Date : 23/10/2015

(54) Title of the invention : EAS ALARMING TAG WITH RFID FEATURES

(51) International classification :G08B 13/24
(31) Priority Document No :12/566,855
(32) Priority Date :25/09/2009
(33) Name of priority country :U.S.A.
(86) International Application No :PCT/US2010/002463
Filing Date :10/09/2010
(87) International Publication No :WO 2011/037604
(61) Patent of Addition to Application Number :NA
Filing Date :NA
(62) Divisional to Application Number :NA
Filing Date :NA

(71)**Name of Applicant :**
1)SENSORMATIC ELECTRONICS, LLC
Address of Applicant :6600 CONGRESS AVENUE, BOCA RATON, FLORIDA 33487, USA U.S.A.
(72)**Name of Inventor :**
1)ALEXIS MARK

(57) Abstract :
An alarming electronic article surveillance (EAS) tag for securing an item of merchandise includes an EAS sensor, a radio frequency identification (RFID) logic block, an alarm transducer, and an alarming tag processor. The RFID logic block includes a transceiver, a memory and a processor. The transceiver operates to receive a first interrogation signal. The memory includes a first identifier associated with the alarming EAS tag and a second identifier associated with the item of merchandise. The processor is operable to send a first trigger signal responsive to the transceiver receiving the first interrogation signal. The alarming tag processor is electrically coupled to the RFID logic block and the EAS sensor. The alarm transducer is operable to produce at least one of a visual indicator and an audible indicator based on the EAS sensor and the alarming tag processor.

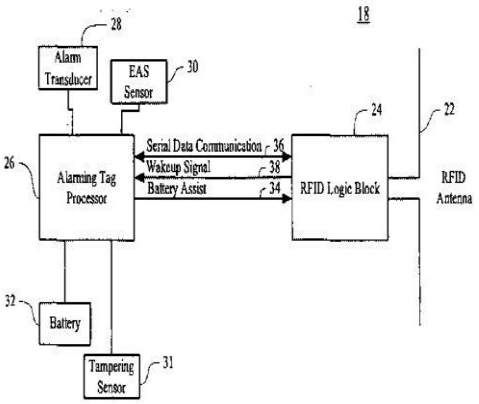

FIG. 2

No. of Pages : 25 No. of Claims : 20

(12) PATENT APPLICATION PUBLICATION
(19) INDIA
(22) Date of filing of Application :12/06/2012
(21) Application No.5166/DELNP/2012 A
(43) Publication Date : 23/10/2015

(54) Title of the invention : EPOXIDATION PROCESS AND MICROSTRUCTURE'

(51) International classification :B01J 23/68
(31) Priority Document No :12/646,221
(32) Priority Date :23/12/2009
(33) Name of priority country :U.S.A.
(86) International Application No :PCT/US2010/061224
Filing Date :20/12/2010
(87) International Publication No :WO 2011/079060
(61) Patent of Addition to Application Number :NA
Filing Date :NA
(62) Divisional to Application Number :NA
Filing Date :NA

(71)**Name of Applicant :**
1)SCIENTIFIC DESIGN COMPANY INC.
Address of Applicant :49 INDUSTRIAL AVENUE, LITTLE FERRY, NEW JERSEY 07643, UNITED STATES OF AMERICA U.S.A.
(72)**Name of Inventor :**
1)HARALD DIALER
2)ANDRZEJ ROKICKI
3)ANDING ZHANG

(57) Abstract :
A method for the start-up of a process for the epoxidation of ethylene comprising: initiating an epoxidation reaction by reacting a feed gas composition containing ethylene, and oxygen, in the presence of an epoxidation catalyst at a temperature of about 180 OC to about 2 10 OC; adding to the feed gas composition about 0.05 ppm to about 2 ppm of moderator; increasing the first temperature to a second temperature of about 240°C to about 250°C, over a time period of about 12 hours to about 60 hours; and maintaining the second temperature for a time period of about 50 hours to about 150 hours.

No. of Pages : 28 No. of Claims : 16

(12) PATENT APPLICATION PUBLICATION
(19) INDIA
(22) Date of filing of Application :19/04/2012
(21) Application No.3395/DELNP/2012 A
(43) Publication Date : 23/10/2015

(54) Title of the invention : TROCAR ASSEMBLY

(51) International classification :A61M 13/00
(31) Priority Document No :12/575,574
(32) Priority Date :08/10/2009
(33) Name of priority country :U.S.A.
(86) International Application No :PCT/US2010/051473
Filing Date :05/10/2010
(87) International Publication No :WO 2011/044123
(61) Patent of Addition to Application Number :NA
Filing Date :NA
(62) Divisional to Application Number :NA
Filing Date :NA

(71)**Name of Applicant :**
1)ETHICON ENDO-SURGERY, INC.
Address of Applicant :4545 CREEK ROAD, CINCINNATI, OH 45242, USA U.S.A.
(72)**Name of Inventor :**
1)SHAILENDRA K. PARIHAR
2)HARESH PATIL
3)CARL J. SHURTLEFF

(57) Abstract :
A trocar assembly including a sleeve assembly defining a working channel extending axially therethrough and including an insufflation port in fluid communication with the working channel, and an insufflation valve assembly fluidly coupled to the insufflation port, the insufflation valve assembly including a valve member and a housing, wherein the valve member defines an inlet channel and is biased relative to the housing to a first position in which the inlet channel is in fluid communication with the working channel, and wherein the valve member is moveable relative to the housing from the first position to a second position in which the inlet channel is fluidly decoupled from the working channel.

No. of Pages : 106 No. of Claims : 10

(12) PATENT APPLICATION PUBLICATION
(21) Application No.3396/DELNP/2012 A
(19) INDIA
(22) Date of filing of Application :19/04/2012
(43) Publication Date : 23/10/2015

(54) Title of the invention : GASB-FILLED SKUTTERUDITE COMPOSITE MATERIAL AND METHOD OF PREPARING THE SAME

(51) International classification :C01G 51/00
(31) Priority Document No :200910196619.3
(32) Priority Date :28/09/2009
(33) Name of priority country :China
(86) International Application No :PCT/US2010/049906
Filing Date :23/09/2010
(87) International Publication No :WO 2011/038055
(61) Patent of Addition to Application Number :NA
Filing Date :NA
(62) Divisional to Application Number :NA
Filing Date :NA

(71)**Name of Applicant :**
1)CORNING INCORPORATED
Address of Applicant :1 RIVERFRONT PLAZA, CORNING, NEW YORK 14831, UNITED STATES OF AMERICA U.S.A.
2)SHANGHAI INSTITUTE OF CERAMICS, CHINESE ACADEMY OF SCIENCES
(72)**Name of Inventor :**
1)LIDONG CHEN
2)XIHONG CHEN
3)LIN HE
4)XIANGYANG HUANG
5)ZHEN XIONG

(57) Abstract :
A composite material comprises a filled skutterudite matrix of formula (I) IyCo4Sb12 (I) in which I represents at least one of Yb, Eu. Ce. La, Nd, Ba and Sr, 0.05<y<l; and GaSb particles within the filled skutterudite matrix, wherein the composite material comprises 0.05-5mol% GaSb particles. Compared with conventional materials, the composite material exhibits a substantially increased Seebeck coefficient, a slightly decreased overall thermal conductivity, and a substantially increased thermoelectric performance index across the whole temperature zone from the low temperature end to the high temperature end, as well as a greatly enhanced thermoelectric efficiency.

No. of Pages : 25 No. of Claims : 10

(12) PATENT APPLICATION PUBLICATION
(19) INDIA
(22) Date of filing of Application :11/06/2012
(21) Application No.5160/DELNP/2012 A
(43) Publication Date : 23/10/2015

(54) Title of the invention : D1499 RADIATION CURABLE RESIN COMPOSITION

(51) International classification :C08G 18/10
(31) Priority Document No :2009-298154
(32) Priority Date :28/12/2009
(33) Name of priority country :Japan
(86) International Application No :PCT/NL2010/050877
Filing Date :22/12/2010
(87) International Publication No :WO 2011/081519
(61) Patent of Addition to Application Number :NA
Filing Date :NA
(62) Divisional to Application Number :NA
Filing Date :NA

(71)**Name of Applicant :**
1)DSM IP ASSETS B.V.
Address of Applicant :HET OVERLOON 1, NL-6411 TE HEERLEN, THE NETHERLANDS Netherlands
2)JSR CORPORATION
(72)**Name of Inventor :**
1)IMAI, HIROKAZU
2)YAMASHITA, YUUTOKU
3)YAMAGUCHI, HIROSHI
4)KUROSAWA, TAKAHIKO

(57) Abstract :
A radiation curable resin composition, containing (A) urethane oligomer containing the reactants of an aliphatic polyester or polyether diol and a diisocyanate and a monohydric alcohol, or urethane oligomer obtained by reacting the reactants of an aliphatic polyester or polyether diol and a diisocyanate with a monohydric alcohol and then reacting a hydroxyl group-containing (meth)acrylate, and (B) monofunctional acrylic monomer, and the contained quantity of (C) polyfunctional acrylic monomer is 2 mass0/0 or less is described and claimed. (FR)L1invention concerne une composition de resine durcissable par rayonnement, renfermant (A) un oligomere durethane contenant les reactants dun polyether ou polyester diol aliphatique et dun diisocyanate et dun alcool monohydrique, ou un oligomere durethane obtenu par reaction des reactants dun polyether ou polyester diol aliphatique et dun diisocyanate avec un alcool monohydrique puis par reaction dun (meth)acrylate contenant un groupe hydroxyle et (6) un monomere acrylique monofonctionnel, et la quantite contenue de (C) monomere acrylique polyfonctionnel est inferieure ou egale a 2 % en masse.

No. of Pages : 38 No. of Claims : 14

(12) PATENT APPLICATION PUBLICATION
(19) INDIA
(22) Date of filing of Application :11/06/2012
(21) Application No.5161/DELNP/2012 A
(43) Publication Date : 23/10/2015

(54) Title of the invention : CERAMIC PARTICLES WITH CONTROLLED PORE AND/OR MICROSPHERE PLACEMENT AND/OR SIZE AND METHOD OF MAKING SAME

(51) International classification :C03B 11/08
(31) Priority Document No :61/291,649
(32) Priority Date :31/12/2009
(33) Name of priority country :U.S.A.
(86) International Application No :PCT/US2010/061999
Filing Date :23/12/2010
(87) International Publication No :WO 2011/082102
(61) Patent of Addition to Application Number :NA
Filing Date :NA
(62) Divisional to Application Number :NA
Filing Date :NA

(71)**Name of Applicant :**
1)OXANE MATERIALS, INC.
Address of Applicant :467 WEST 38TH STREET, PINE FOREST OFFICE BUILDING #21, HOUSTON, TEXAS 77018, UNITED STATES OF AMERICA U.S.A.
(72)**Name of Inventor :**
1)WU, SHANGHUA
2)XIE, YUMING
3)COKER, CHRISTOPHER E.
4)CHATTERJEE, DILIP

(57) Abstract :
The present invention relates to lightweight high strength microsphere containing ceramic particles having controlled microsphere placement and/or size and microsphere morphology, which produces an improved balance of specific gravity and crush strength such that they can be used in applications such as proppants to prop open subterranean formation fractions. Proppant formulations are further disclosed which use one or more microsphere containing ceramic particles of the present invention. Methods to prop open subterranean formation fractions are further disclosed. In addition, other uses for the microsphere containing ceramic particles of the present invention are further disclosed, as well as methods of making the microsphere containing ceramic particles.

No. of Pages : 139 No. of Claims : 60

(12) PATENT APPLICATION PUBLICATION
(19) INDIA
(22) Date of filing of Application :17/04/2012

(21) Application No.3296/DELNP/2012 A
(43) Publication Date : 23/10/2015

(54) Title of the invention : LIQUID ISOCYANATE COMPOSITION

(51) International classification :C08G 18/48
(31) Priority Document No :09175012.5
(32) Priority Date :04/11/2009
(33) Name of priority country :EUROPEAN UNION
(86) International Application No :PCT/EP2010/066692
Filing Date :03/11/2010
(87) International Publication No :WO 2011/054840
(61) Patent of Addition to Application Number :NA
Filing Date :NA
(62) Divisional to Application Number :NA
Filing Date :NA

(71)**Name of Applicant :**
1)HUNTSMAN INTERNATIONAL LLC
Address of Applicant :500 HUNTSMAN WAY, SALT LAKE CITY, UTAH 84108, UNITED STATES OF AMERICA U.S.A.
(72)**Name of Inventor :**
1)MARLEEN BLEYEN
2)CONNY NIJS
3)CHRIS IAN LINDSAY

(57) Abstract :
A liquid isocyanate composition is provided. The composition comprises - at least one isocyanate component; at least one polyol and/or the adduct of said at least one isocyanate component and at least one polyol; - clay nanoparticles. The polyol is an EO-tipped polyol, the NCO/OH ratio being in the range of 1500 to 1.5.

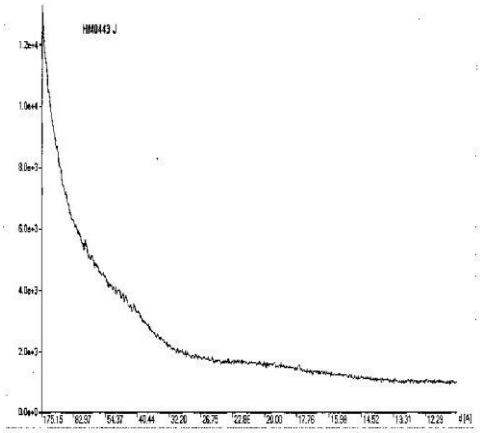

figure 1: SAXS dispersion I

No. of Pages : 36 No. of Claims : 11

(12) PATENT APPLICATION PUBLICATION
(19) INDIA
(22) Date of filing of Application :19/04/2012
(21) Application No.3389/DELNP/2012 A
(43) Publication Date : 23/10/2015

(54) Title of the invention : VEHICLE TYRE

(51) International classification :B60C 9/20
(31) Priority Document No :10 2010 000 014.0
(32) Priority Date :07/01/2010
(33) Name of priority country :Germany
(86) International Application No :PCT/EP2010/065376
Filing Date :14/10/2010
(87) International Publication No :WO 2011/082844
(61) Patent of Addition to Application Number :NA
Filing Date :NA
(62) Divisional to Application Number :NA
Filing Date :NA

(71)**Name of Applicant :**
1)CONTINENTAL REIFEN DEUTSCHLAND GMBH
Address of Applicant :VAHRENWALDER STRAE 9, 30165 HANNOVER, GERMANY Germany
(72)**Name of Inventor :**
1)VIKTOR BLUMEL
2)RAFAL NOJEK

(57) Abstract :
The invention relates to a vehicle tyre comprising at least two bracing plies intersecting at an angle, and a bracing bandage. The reinforcements of the bracing plies are exclusively made of steel, each bracing ply having a tension of < 17.500 N per dm of width, with a pre-determined extension of 1%, and the reinforcements of the bracing plies are at an angle of between 18° and 45° to the peripheral direction of the tyre. The reinforcements of the bracing bandage consist of a non-metallic material, preferably polyester, nylon or a hybrid cord, and the bracing bandage has a total tension of > 2.000 N per dm of width, with a predetermined extension of 1%.

No. of Pages : 11 No. of Claims : 10

(12) PATENT APPLICATION PUBLICATION
(19) INDIA
(22) Date of filing of Application :19/04/2012
(21) Application No.3390/DELNP/2012 A
(43) Publication Date : 23/10/2015

(54) Title of the invention : CORROSION RESISTANT METAL PRODUCTS

(51) International classification :B21D 39/04
(31) Priority Document No :2009905132
(32) Priority Date :22/10/2009
(33) Name of priority country :Australia
(86) International Application No :PCT/GB2010/001934
Filing Date :19/10/2010
(87) International Publication No :WO 2011/048364
(61) Patent of Addition to Application Number :NA
Filing Date :NA
(62) Divisional to Application Number :NA
Filing Date :NA

(71)**Name of Applicant :**
1)CLADINOX INTERNATIONAL LIMITED
Address of Applicant :SUITE 9, ANSUYA ESTATE,REVOLUTION AVENUE, VICTORIA, SEYCHELLES Seychelles
(72)**Name of Inventor :**
1)ANTONINO GIORGIO CACACE

(57) Abstract :
A billet [B1-B23] is provided comprising a body [C, 110, 110a, 122, 62] of solid steel and a cladding [J] of an alloy comprising stainless steel, nickel-chrome, nickel-copper and copper-nickel alloys. The cladding may be comprised of a square tube in which the body is inserted with an interface [Z] at which the cladding becomes bonded to the body when the billet is heated and rolled or otherwise worked into a ferrous product [F, R, 120,123]. At least one element [Ea, Et, Em] composed of a mass of finely divided scavenging aluminium, titanium or magnesium, is placed in the tube adjacent the body and separate from the interface. The elements are advantageously compressed into briquettes which scavenge oxygen from residual air at the interface to prevent oxidation of the cladding at the interface. The tube may be closed to prevent gases outside the billet from penetrating to the interface. Alternatively, reliance may be placed on the briquettes to scavenge oxygen from the residual air and also from atmospheric air and furnace gases before they can penetrate to the interface. The ends of the billet are heated up before the tube reaches a temperature at the interface at which oxidation starts. The briquettes of aluminium or magnesium [Ea, Em] melt before the billet reaches its rolling temperature and a further element [Ea] of finely divided carbon steel may then be inserted between these briquettes and the steel body to prevent the molten metal from penetrating to the interface. In an open tube, an additional element [Eu] composed of ammonium chloride or urea may be inserted between the carbon steel briquette and steel body. The additional element disassociates at a low temperature to scour residual gases out of the interface. The elements can be placed directly in the tube or in a cartridge [60-60g] which is subsequently welded to the tube.

No. of Pages : 39 No. of Claims : 12

(12) PATENT APPLICATION PUBLICATION
(21) Application No.5170/DELNP/2012 A
(19) INDIA
(22) Date of filing of Application :12/06/2012
(43) Publication Date : 23/10/2015

(54) Title of the invention : SYSTEM FOR TREATING SURFACES OF OBJECTS

(51) International classification :B05B 13/02
(31) Priority Document No :10 2009 060 649.1
(32) Priority Date :22/12/2009
(33) Name of priority country :Germany
(86) International Application No :PCT/EP2010/007119
Filing Date :24/11/2010
(87) International Publication No :WO 2011/085746
(61) Patent of Addition to Application Number :NA
Filing Date :NA
(62) Divisional to Application Number :NA
Filing Date :NA

(71)**Name of Applicant :**
1)EISENMANN AG
Address of Applicant :TUBINGER STR. 81, 71032 BOBINGEN, GERMANY Germany
(72)**Name of Inventor :**
1)JURGEN FERNHOLZ
2)RALPH MEIER
3)JORG ROBBIN

(57) Abstract :
In the invention relates to a system for treating surfaces of objects, in particular for painting objects, in particular vehicle body parts, comprising a treatment booth (16), which defines a treatment space (20). The objects (12) can be conveyed into and back out of the treatment space (20) by means of a conveying device (28, 84). The conveying device (28, 84) comprises a conveying element (28), by means of which a first surface (76) having a first retaining device (80) for at least one object (12) and at least one second surface (78) having a second retaining device (82) for at least one object (12) are provided. The first and the second surface (76, 78) are arranged in such a way that the first or the second surface (76, 78) bounds the treatment space (20) at least in some areas depending on the position of the conveying element (28).

No. of Pages : 27 No. of Claims : 9

(12) PATENT APPLICATION PUBLICATION
(21) Application No.5150/DELNP/2012 A
(19) INDIA
(22) Date of filing of Application :11/06/2012
(43) Publication Date : 23/10/2015

(54) Title of the invention : METHOD FOR ADJUSTING RECORDING CONDITION, OPTICAL DISC DEVICE, AND INFORMATION RECORDING METHOD

(51) International classification :G11B 7/0045
(31) Priority Document No :2010-009627
(32) Priority Date :20/01/2010
(33) Name of priority country :Japan
(86) International Application No :PCT/JP2010/053300
Filing Date :02/03/2010
(87) International Publication No :WO 2011/089735
(61) Patent of Addition to Application Number :NA
Filing Date :NA
(62) Divisional to Application Number :NA
Filing Date :NA

(71)**Name of Applicant :**
1)HITACHI CONSUMER ELECTRONICS CO., LTD.
Address of Applicant :2-1, OTEMACHI 2-CHOME, CHIYODA-KU, TOKYO 1000004, JAPAN Japan
(72)**Name of Inventor :**
1)KUROKAWA TAKAHIRO
2)MINEMURA HIROYUKI

(57) Abstract :
Provided is a recording adjustment method capable of controlling an edge position of a mark with high accuracy. Based on the acquired read-out signal waveform, a starting position of a last pulse is adjusted such that a so-called L-SEAT shifi value for an end edge of the mark becomes minimum.

No. of Pages : 115 No. of Claims : 16

(12) PATENT APPLICATION PUBLICATION
(19) INDIA
(22) Date of filing of Application :11/06/2012
(21) Application No.5151/DELNP/2012 A
(43) Publication Date : 23/10/2015

(54) Title of the invention : WIND POWER PLANT

(51) International classification :F03D 11/00
(31) Priority Document No :10 2010 000 756.0
(32) Priority Date :08/01/2010
(33) Name of priority country :Germany
(86) International Application No :PCT/EP2011/050202
Filing Date :10/01/2011
(87) International Publication No :WO 2011/083156
(61) Patent of Addition to Application Number :NA
Filing Date :NA
(62) Divisional to Application Number :NA
Filing Date :NA

(71)**Name of Applicant :**
1)WOBBEN ALOYS
Address of Applicant :ARGESTRAE 19, 26607 AURICH, GERMANY Germany
(72)**Name of Inventor :**
1)ROER JOCHEN

(57) Abstract :
The present invention concerns a wind power installation (10) comprising a pod (16) having at least one fluid-cooled component and a heat exchanger (28). To simplify transport and construction of a wind power installation with a heat exchanger and thus to eliminate or at least reduce sources of error in the wind power installation of the kind set forth in the opening part of this specification the heat exchanger is integrated into the external contour of the pod. In that respect the present invention is based on the realisation that in that way when transporting and handling the pod, there is no need for any alterations worth mentioning, at the same time however the heat exchanger can also be installed upon assembly of the pod in the factory and can be tested for satisfactory functioning. That leads to a simplification in transporting and constructing the wind power installation and at the same time eliminates possible error sources.

No. of Pages : 16 No. of Claims : 9

(12) PATENT APPLICATION PUBLICATION
(21) Application No.5152/DELNP/2012 A
(19) INDIA
(22) Date of filing of Application :11/06/2012
(43) Publication Date : 23/10/2015

(54) Title of the invention : AUTOMATIC ANALYZING DEVICE

(51) International classification :G01N 35/00
(31) Priority Document No :2009-283570
(32) Priority Date :15/12/2009
(33) Name of priority country :Japan
(86) International Application No :PCT/JP2010/007042
Filing Date :03/12/2010
(87) International Publication No :WO 2011/074202
(61) Patent of Addition to Application Number :NA
Filing Date :NA
(62) Divisional to Application Number :NA
Filing Date :NA

(71)**Name of Applicant :**
1)HITACHI HIGH-TECHNOLOGIES CORPORATION
Address of Applicant :24-14, NISHI SHIMBASHI 1-CHOME, MINATO-KU, TOKYO, 105-8717 JAPAN Japan
(72)**Name of Inventor :**
1)AKUTSU MASASHI

(57) Abstract :
Disclosed is an automatic analyzing device having a reagent cooling box in which reagents that need to be exchanged or additionally loaded can be disposed while vaporization, bubbling, and rolling of liquid surfaces of the reagents are prevented in the most effective manner. A reagent loading mechanism includes a reagent loading unit and a reagent holding unit serving as a rotating mechanism. A reagent cover opening mechanism and a reagent transferring mechanism are disposed on the circumference of the reagent holding unit. A position at which the reagents can be continuously loaded from the reagent loading unit can be selected from accommodating positions in the reagent holding unit by setting the number (X) of held reagents and an offset number (Y) of the opening mechanism and the transferring mechanism to satisfy a relationship of $X = nY + 1$ (n is arbitrary). In addition, the opening operation and the transferring operation are performed during the same period so that unnecessary operations of the mechanisms can be suppressed by controlling the sequence such that opening of the reagent covers and transferring of the reagents can be continuously performed.

No. of Pages : 39 No. of Claims : 10

(12) PATENT APPLICATION PUBLICATION
(21) Application No.5153/DELNP/2012 A
(19) INDIA
(22) Date of filing of Application :11/06/2012
(43) Publication Date : 23/10/2015

(54) Title of the invention : CAULKING-FASTENED COMPONENT, METHOD OF FASTENEING THE CAULKING-FASTNENED COMPONENT, AND METHOD OF MANUFACTURING THE CAULKING-FASTENED COMPONENT

(51) International classification	:F16B	(71)**Name of Applicant :**
(31) Priority Document No	:NA	**1)TOYOTA JIDOSHA KABUSHIKI KAISHA**
(32) Priority Date	:NA	Address of Applicant :1, TOYOTA-CHO, TOYOTA-SHI,
(33) Name of priority country	:NA	AICHI, 471-8571 JAPAN Japan
(86) International Application No	:PCT/JP2011/063157	(72)**Name of Inventor :**
Filing Date	:08/06/2011	**1)TANIGUCHI MAKOTO**
(87) International Publication No	: NA	**2)KUROSAKI YUKI**
(61) Patent of Addition to Application Number	:NA	**3)UKAI YOSHIHIKO**
Filing Date	:NA	**4)KAMITAKE JUN**
		5)KAYAHANA JO
(62) Divisional to Application Number	:NA	**6)YAMAGUCHI SHUHEI**
Filing Date	:NA	**7)MAKINO KATSUAKI**

(57) Abstract :
An annular caulking-fastened component (14) to be fastened to a counterpart component (10) by caulking includes a notch (24) formed in an inner peripheral edge portion (23) at one end side in a center axis direction, the notch (24) being to be fixed to the counterpart 10 component (10) by caulking; and at least one of an inner-peripheral stepped portion (28) formed between an inner peripheral surface (18) and the inner peripheral edge portion (23) and outward from the inner peripheral surface (18) in a radial direction and an end-face stepped portion (30) formed between an end face (26) at one end side in the center axis direction and the inner peripheral edge portion (23) and from the end face (26) toward the 15 other end side in the center axis direction.

No. of Pages : 33 No. of Claims : 9

(12) PATENT APPLICATION PUBLICATION
(21) Application No.3393/DELNP/2012 A
(19) INDIA
(22) Date of filing of Application :19/04/2012
(43) Publication Date : 23/10/2015

(54) Title of the invention : METERING SYSTEM, DENSE PHASE CONVEYING SYSTEM AND METHOD FOR SUPPLYING BULK MATERIAL IN POWDER FORM

(51) International classification :A61M
(31) Priority Document No :10 2009 048 961.4
(32) Priority Date :10/10/2009
(33) Name of priority country :Germany
(86) International Application No :PCT/EP2010/006150
Filing Date :08/10/2010
(87) International Publication No :WO 2011/042194
(61) Patent of Addition to Application Number :NA
Filing Date :NA
(62) Divisional to Application Number :NA
Filing Date :NA

(71)**Name of Applicant :**
1)LINDE AG
Address of Applicant :KLOSTERHOFSTRASSE 1, 80331 MUNCHEN, GERMANY Germany
(72)**Name of Inventor :**
1)HORST KRETSCHMER
2)JORG KLEEBERG
3)DIETMAR RUGER
4)OLAF SCHULZE
5)CHRISTIAN EICHHORN

(57) Abstract :
The present invention relates to a metering device and a dense phase conveying system for the dosed supply of a light bulk material from a supply device (B, SG) via conveying tubes (FR1, FR2, FR3) to a consumer. For this purpose, an airlock (S) has a delivery device (AE/S) having a dust flow regulation device (FI4), which opens into a metering container (DB), whose delivery device (AE/DB) comprises multiple dust flow regulation devices (FI1, FI2, FI3), which each open into one conveying tube (FR1, FR2, FR3). A pressure regulation device of the metering device is coupled for differential pressure regulations (PDC1-2, PDC3-R) to pressure measuring devices (PIS1, PI2) of the airlock (S) and the metering container (DB) and to pressure measuring devices (PIR, PI3) of the metering container delivery device (AE/DB) and the consumer, in order to control the metering container pressure (PI2) as a function of the second differential pressure regulation (PDC3-R). For a differential pressure control (PISA4-1) between supply device (B, SG) and airlock (S), the pressure regulation device is coupled to a pressure measuring device (PISA4) of the supply device (SG, B). The pressure regulation device controls the airlock pressure (PIS1) as a function of an airlock fill level (LIS/S) and the differential pressure control (PISA4-1) by actuating at least one suction device (V) connectable to the airlock (S). Furthermore, the present invention discloses a method using the dense phase conveying system having the metering device.

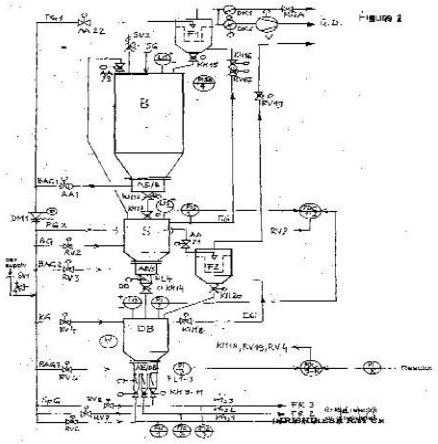

No. of Pages : 26 No. of Claims : 13

(12) PATENT APPLICATION PUBLICATION
(21) Application No.5180/DELNP/2012 A
(19) INDIA
(22) Date of filing of Application :12/06/2012
(43) Publication Date : 23/10/2015

(54) Title of the invention : APPARATUS AND METHOD FOR IMPLEMENTING A DIFFERENTIAL DRIVE AMPLIFIER AND A COIL ARRANGEMENT

(51) International classification :H03F 3/217
(31) Priority Document No :61/267,329
(32) Priority Date :07/12/2009
(33) Name of priority country :U.S.A.
(86) International Application No :PCT/US2010/059334
Filing Date :07/12/2010
(87) International Publication No :WO 2011/071950
(61) Patent of Addition to Application Number :NA
Filing Date :NA
(62) Divisional to Application Number :NA
Filing Date :NA

(71)**Name of Applicant :**
1)WIPOWER, INC.
Address of Applicant :5775 MOREHOUSE DRIVE, SAN DIEGO, CALIFORNIA 92121, UNITED STATES OF AMERICA U.S.A.
(72)**Name of Inventor :**
1)RYAN TSENG
2)GABRIEL MAYO

(57) Abstract :
Exemplary embodiments are directed to differentially driving a l6ad. An apparatus includes a differential drive amplifier including a switching device coupled with a first output node and a second output node. The first output node and the second output node drive a load network including primary coils. The differential drive amplifier also includes a drive circuit configured to drive the switching device. The drive circuit may be configured to provide a drive signal to the switching device to alter a conductive state of the switching device to produce a first output signal at the first output node and a second output signal at the second output node. The first and second output signals may be substantially equal in magnitude but opposite in polarity relative to a reference voltage.

No. of Pages : 38 No. of Claims : 34

(12) PATENT APPLICATION PUBLICATION
(19) INDIA
(22) Date of filing of Application :12/06/2012
(21) Application No.5181/DELNP/2012 A
(43) Publication Date : 23/10/2015

(54) Title of the invention : SUBPOPULALTIONS OF SPORE-LIKE CELLS AND USES THEREOF

(51) International classification :C12N 5/0789
(31) Priority Document No :61/260,607
(32) Priority Date :12/11/2009
(33) Name of priority country :U.S.A.
(86) International Application No :PCT/US2010/056340
Filing Date :11/11/2010
(87) International Publication No :WO 2011/060135
(61) Patent of Addition to Application Number :NA
Filing Date :NA
(62) Divisional to Application Number :NA
Filing Date :NA

(71)**Name of Applicant :**
1)VBI TECHNOLOGIES, LLC
Address of Applicant :355 POND STREET, UXBRIDGE, MASSACHUSETTS 01569, UNITED STATES OF AMERICA U.S.A.
(72)**Name of Inventor :**
1)MARTIN P. VACANTI
2)CHARLES A. VACANTI

(57) Abstract :
Subpopulations of spore-like cells expressing specific surface and gene expression mzkers are provided. In one embodiment, the cells express at least one cell surface or gene expression marker selected from the group consisting of Oct4, -0-296, cripto, Gdf3, UtFI, Ecatl, Esgl, Sox% Pax6, nestin, SCA-1, CD29, CD34, CD90, B1 integrin, cKit, SP-C, CC10, SFl, DAXl and SCG10. Also provided are methods for puriQimg a subpopulation of spore-like cells of interest hm a population of spore-like cells, and methods for inducing differentiation of the isolated spore-like cells into cells of endodermal, mesodermal 1 or ectodermal origin. The spore-like cells can be used to generate cells originating fi-om all three germ layers and can be used to I treat a patient who has a dsficiency of functional cells in any of a wide variety of tissues, including the retina, intestine, bladder, 1 kidney, liver, lung, nervous system, or endocrine system. i

No. of Pages : 33 No. of Claims : 9

(12) PATENT APPLICATION PUBLICATION
(19) INDIA
(22) Date of filing of Application :18/04/2012

(21) Application No.3375/DELNP/2012 A
(43) Publication Date : 23/10/2015

(54) Title of the invention : LITHIUM SULFUR BATTERY

(51) International classification :H01M 12/08
(31) Priority Document No :09174210.6
(32) Priority Date :27/10/2009
(33) Name of priority country :EPO
(86) International Application No :PCT/EP2010/066143
Filing Date :26/10/2010
(87) International Publication No :WO 2011/051275
(61) Patent of Addition to Application Number :NA
Filing Date :NA
(62) Divisional to Application Number :NA
Filing Date :NA

(71)**Name of Applicant :**
1)SOLVAY FLUOR GMBH
Address of Applicant :HANS-BOCKLER-ALLEE 20, 30173 HANNOVER GERMANY Germany
(72)**Name of Inventor :**
1)OLSCHIMKE, JENS
2)BOMKAMP, MARTIN
3)EICHER, JOHANNES

(57) Abstract :
Preferred fluorosubstituted compounds which are predominantly solvents are notably selected from the group consisting of fluorosubstituted carboxylic acid esters, fluorosubstituted carboxylic acid amides, fluorosubstituted fluorinated ethers, fluorosubstituted carbamates, fluorosubstituted cyclic carbonates, and fluorosubstituted acyclic carbonates fluorosubstituted ethers, perfluoroalkyl phosphoranes, fluorosubstituted phosphites, fluorosubstituted phosphates, fluorosubstituted phosphonates and fluorosubstituted heterocycles. Monofluoroethylene carbonate, cis-difluoroethylene carbonate, trans-difluoroethylene carbonate, 4,4-difluoroethylene carbonate, trifluoroethylene carbonate, tetrafluoroethylene carbonate, 4-fluoro-4-methyl-l,3-dioxolane-2-one, 4-fluoro-4-ethyl-1,3-dioxolane-2-one, 2,2,2-trifluoroethyl-methyl carbonate, 2,2,2-trifluoroethyl-fluoromethyl carbonate are preferred. The solvent my further comprise non-fluorinated solvents, e.g. ethylene carbonate, a dialkyl carbonate or propylene carbonate. The invention also concerns the use of fluorinated compounds as additive for such batteries and specific electrolyte solutions.

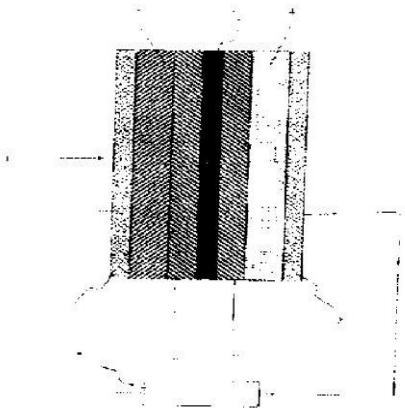

Figure 1

No. of Pages : 25 No. of Claims : 14

(12) PATENT APPLICATION PUBLICATION
(19) INDIA
(22) Date of filing of Application :07/06/2012
(21) Application No.5028/DELNP/2012 A
(43) Publication Date : 23/10/2015

(54) Title of the invention : BIS-ACYLATED HYDROXYLAMINE DERIVATIVES

(51) International classification :C07C 311/48
(31) Priority Document No :61/267,399
(32) Priority Date :17/12/2009
(33) Name of priority country :U.S.A.
(86) International Application No :PCT/US2010/059331
Filing Date :07/12/2010
(87) International Publication No :WO 2011/071947
(61) Patent of Addition to Application Number :NA
Filing Date :NA
(62) Divisional to Application Number :NA
Filing Date :NA

(71)**Name of Applicant :**
1)JOHNS HOPKINS UNIVERSITY
Address of Applicant :3400 N. CHARLES ST. BALTIMORE, MARYLAND 21218, UNITED STATES OF AMERICA U.S.A.
2)CARDIOXYL PHARMACEUTICALS, INC
(72)**Name of Inventor :**
1)JOHN P. TOSCANO
2)ART SUTTON
3)VINCENT J. KALISH
4)FREDERICK ARTHUR BROOKFIELD
5)STEPHEN MARTIN COURTNEY
6)LISA MARIE FROST

(57) Abstract :
The invention provides certain bis-acylated hydroxylamine derivative compounds, pharmaceutical compositions and kits comprising such compounds, and methods of using such compounds or pharmaceutical compositions. In particular, the invention provides methods of using such compounds or pharmaceutical compositions for treating, preventing, or delaying the onset and/or develop of a disease or condition. In some embodiments, the disease or condition is selected from cardiovascular diseases, ischemia, reperfiision injury, cancerous disease, pulmonary hypertension and conditions responsive to nitroxyl therapy.

No. of Pages : 121 No. of Claims : 32

(12) PATENT APPLICATION PUBLICATION
(19) INDIA
(22) Date of filing of Application :12/06/2012
(21) Application No.5186/DELNP/2012 A
(43) Publication Date : 23/10/2015

(54) Title of the invention : AMYLOID BINDING AGENTS

(51) International classification :C07C 255/43
(31) Priority Document No :61/285,470
(32) Priority Date :10/12/2009
(33) Name of priority country :U.S.A.
(86) International Application No :PCT/US2010/059952
Filing Date :10/12/2010
(87) International Publication No :WO 2011/072257
(61) Patent of Addition to Application Number :NA
Filing Date :NA
(62) Divisional to Application Number :NA
Filing Date :NA

(71)**Name of Applicant :**
1)THE REGENTS OF THE UNIVERSITY OF CALIFORNIA
Address of Applicant :1111 FRANKLIN STREET, 12TH FLOOR, OAKLAND, CA 94607, USA. U.S.A.
(72)**Name of Inventor :**
1)YANG JERRY
2)THEODORAKIS EMMANUEL A.

(57) Abstract :
There are provided compounds and methods for the detection of amyloids and treatment of diseases related to amyloids including Alzheimers disease and other related amyloid-based neurodegenerative diseases.

No. of Pages : 82 No. of Claims : 16

(12) PATENT APPLICATION PUBLICATION
(19) INDIA
(22) Date of filing of Application :12/06/2012
(21) Application No.5187/DELNP/2012 A
(43) Publication Date : 23/10/2015

(54) Title of the invention : PURIFICATION OF ISOPRENE FROM RENEWABLE RESOURCES

(51) International classification :C08F 6/12
(31) Priority Document No :61/288,142
(32) Priority Date :18/12/2009
(33) Name of priority country :U.S.A.
(86) International Application No :PCT/US2010/060552
Filing Date :15/12/2010
(87) International Publication No :WO 2011/075534
(61) Patent of Addition to Application Number :NA
Filing Date :NA
(62) Divisional to Application Number :NA
Filing Date :NA

(71)**Name of Applicant :**
1)DANISCO US INC.
Address of Applicant :925 PAGE MILL ROAD, PALO ALTO, CALIFORNIA 94304-1013 USA. U.S.A.
2)THE GOODYEAR TIRE & RUBBER COMPANY
(72)**Name of Inventor :**
1)FEHER FRANK J.
2)KAN JOHN KALUEN
3)MCAULIFFE JOSEPH C.
4)MCCALL THOMAS F.
5)RODEWALD STEPHAN
6)SABO TIMOTHY A.
7)WONG TANG H.
8)PLOETZ CHRISTOPHER D.
9)PICKERT LAWRENCE J.

(57) Abstract :
Methods and apparatus for the purification of isoprene, such as the purification of a bioisoprene composition from fermentor off-gas. The apparatus includes two columns that process the fermentor off-gas, which includes isoprene and various impurities. A solvent is added to the off-gas in the first column, and the isoprene is stripped from the solvent in the second column. Also provided is a downstream further purification process. Also provided are the resulting purified isoprene compositions.

No. of Pages : 77 No. of Claims : 84

(12) PATENT APPLICATION PUBLICATION
(21) Application No.5188/DELNP/2012 A
(19) INDIA
(22) Date of filing of Application :12/06/2012
(43) Publication Date : 23/10/2015

(54) Title of the invention : LIQUID-FILLED VIBRATION ISOLATING DEVICE

(51) International classification :F16F 13/18
(31) Priority Document No :2009-280871
(32) Priority Date :10/12/2009
(33) Name of priority country :Japan
(86) International Application No :PCT/JP2010/006059
Filing Date :12/10/2010
(87) International Publication No :WO 2011/070700
(61) Patent of Addition to Application Number :NA
Filing Date :NA
(62) Divisional to Application Number :NA
Filing Date :NA

(71)**Name of Applicant :**
1)BRIDGESTONE CORPORATION
Address of Applicant :10-1, KYOBASHI 1-CHOME, CHUO-KU, TOKYO 1048340, JAPAN, Japan
(72)**Name of Inventor :**
1)TSUTSUMI TATSUYA

(57) Abstract :
In a liquid-filled vibration isolating device according to a first aspect of the 5 present invention, at least one of a membrane support (1 1) and a membrane retainer (12) has a through hole (14) partitioned into a plurality of windows by one or more beams (15) each having a curved or deflected shape in a plane perpendicular to the thickness direction of a partition member (9).

No. of Pages : 41 No. of Claims : 13

(12) PATENT APPLICATION PUBLICATION
(19) INDIA
(22) Date of filing of Application :17/04/2012
(21) Application No.3305/DELNP/2012 A
(43) Publication Date : 23/10/2015

(54) Title of the invention : A MEDICAL IMPLANT DEVICE

(51) International classification :A61F 2/30
(31) Priority Document No :0918484.7
(32) Priority Date :22/10/2009
(33) Name of priority country :U.K.
(86) International Application No :PCT/EP2010/065786
Filing Date :20/10/2010
(87) International Publication No :WO 2011/048138
(61) Patent of Addition to Application Number :NA
Filing Date :NA
(62) Divisional to Application Number :NA
Filing Date :NA

(71)**Name of Applicant :**
1)DEPUY INTERNATIONAL LIMITED
Address of Applicant :ST ANTHONY'S ROAD, BEESTON, LEEDS YORKSHIRE LS11 8DT, UNITED KINGDOM U.K.
(72)**Name of Inventor :**
1)JAMES BROOKS

(57) Abstract :
A medical implant device comprises a substrate (10) having an undulating surface provided by peaks (12) which are separated by recesses (14). The device includes a porous coating layer provided on the undulating surface of the substrate which comprises a plurality of particles (16). The spacing between adjacent peaks on the surface of the substrate is less than the particle size of the particles. The particles are bonded to the peaks on the surface of the substrate and adjacent particles are bonded to one another.

No. of Pages : 17 No. of Claims : 15

(12) PATENT APPLICATION PUBLICATION
(19) INDIA
(22) Date of filing of Application :19/04/2012
(21) Application No.3397/DELNP/2012 A
(43) Publication Date : 23/10/2015

(54) Title of the invention : FLEXURE ASSEMBLIES AND FIXTURES FOR HAPTIC FEEDBACK

(51) International classification :G06F 3/01
(31) Priority Document No :61/253,007
(32) Priority Date :19/10/2009
(33) Name of priority country :U.S.A.
(86) International Application No :PCT/US2010/002773
Filing Date :18/10/2010
(87) International Publication No :WO 2011/049609
(61) Patent of Addition to Application Number :NA
Filing Date :NA
(62) Divisional to Application Number :NA
Filing Date :NA

(71)**Name of Applicant :**
1)BAYER MATERIALSCIENCE AG
Address of Applicant :51368 LEVERKUSEN, GERMANY Germany
(72)**Name of Inventor :**
1)SILMON JAMES BIGGS

(57) Abstract :
The present invention provides methods and devices directed to the use of flexure assemblies to assist components driven by actuators, including but not limited to electroactive polymer transducers for providing sensory feedback. The present invention may be employed in any type of user interface device including, but not limited to, touch pads, touch screens or key pads or the like for computer, phone, PDA, video game console, GPS system, kiosk applications, etc.

No. of Pages : 125 No. of Claims : 29

(12) PATENT APPLICATION PUBLICATION
(19) INDIA
(22) Date of filing of Application :19/04/2012
(21) Application No.3398/DELNP/2012 A
(43) Publication Date : 23/10/2015

(54) Title of the invention : METHOD AND SYSTEM FOR PRODUCING ASPHALT MIXTURE

(51) International classification :E01C 19/10
(31) Priority Document No :10 2009 050 506.7
(32) Priority Date :23/10/2009
(33) Name of priority country :Germany
(86) International Application No :PCT/EP2009/009292
Filing Date :28/12/2009
(87) International Publication No :WO 2011/047705
(61) Patent of Addition to Application Number :NA
Filing Date :NA
(62) Divisional to Application Number :NA
Filing Date :NA

(71)**Name of Applicant :**
1)LOESCHE GMBH
Address of Applicant :HANSAALLEE 243, 40549 DUSSELDORF, GERMANY Germany
(72)**Name of Inventor :**
1)JULIA ARETZ
2)CHRISTIAN BARCZUS
3)WLADIMIR GARBER
4)STEFAN WOLBER

(57) Abstract :
The invention relates to a method and a plant for producing asphalt mixture and is di-rected in particular to the recycling of recovered asphalt. In order to achieve recycling of up to 100% recovered asphalt and to produce an asphalt mixture with the required qual¬ity, it is provided according to the invention that at least the drying and heating of the asphalt granulate and/or aggregates are carried out in a low oxygen atmosphere. The low oxygen atmosphere is achieved by supplying low oxygen gases with an oxygen content of maximum 10%, preferably with an oxygen content of maximum 5%. The con¬veyance of the heated and dried asphalt granulate and/or aggregates, the siloing and mixing with bitumen to form a new, incorporation-ready asphalt mixture also usefully take place in a low oxygen atmosphere.

No. of Pages : 33 No. of Claims : 29

(12) PATENT APPLICATION PUBLICATION
(19) INDIA
(22) Date of filing of Application :19/04/2012
(21) Application No.3399/DELNP/2012 A
(43) Publication Date : 23/10/2015

(54) Title of the invention : LIQUID DISPENSING WITH BLINK DETECTION

(51) International classification :A61B 3/113
(31) Priority Document No :61/253,613
(32) Priority Date :21/10/2009
(33) Name of priority country :U.S.A.
(86) International Application No :PCT/US2010/053132
Filing Date :19/10/2010
(87) International Publication No :WO 2011/049911
(61) Patent of Addition to Application Number :NA
Filing Date :NA
(62) Divisional to Application Number :NA
Filing Date :NA

(71)**Name of Applicant :**
1)JOHNSON & JOHNSON VISION CARE, INC.
Address of Applicant :7500 CENTURION PARKWAY, JACKSONVILLE, FLORIDA 32256, UNITED STATES OF AMERICA U.S.A.
(72)**Name of Inventor :**
1)LESLIE A. VOSS
2)CATIE A. MORLEY
3)GARY S. HALL

(57) Abstract :
This invention discloses methods and apparatus for providing a variable optic insert into an ophthalmic lens. An energy source is capable of powering the variable optic insert included within the ophthalmic lens. In some embodiments, an ophthalmic lens is cast molded from a silicone hydrogel.

No. of Pages : 17 No. of Claims : 20

(12) PATENT APPLICATION PUBLICATION
(19) INDIA
(22) Date of filing of Application :12/06/2012
(21) Application No.5196/DELNP/2012 A
(43) Publication Date : 23/10/2015

(54) Title of the invention : ELECTRICAL SWITCH ASSEMBLY COMPRISING A 5-WAY TOGGLE MECHANISM AND ILLUMINATED FLEXIBLE LAYER

(51) International classification :H01H 13/715
(31) Priority Document No :61/266,220
(32) Priority Date :03/12/2009
(33) Name of priority country :U.S.A.
(86) International Application No :PCT/CA2010/001908
Filing Date :02/12/2010
(87) International Publication No :WO 2011/066647
(61) Patent of Addition to Application Number :NA
Filing Date :NA
(62) Divisional to Application Number :NA
Filing Date :NA

(71)**Name of Applicant :**
1)OMRON DUALTEC AUTOMOTIVE ELECTRONICS INC.
Address of Applicant :2440 WINSTON PARK DRIVE, OAKVILLE, ONTARIO L6H 7V2, CANADA Canada
(72)**Name of Inventor :**
1)IORDACHE, LUCIAN

(57) Abstract :
A switch assembly is provided that in one aspect provides a switch knob that can move in up to five directions by using a plunger element that moves with respect to an actuation plate such that tilting the knob in any of four directions uses the plate to activate underlying domes whereas pressing the knob towards the assembly provides a fifth function by moving the plunger element with respect to the plate and thus activating a central dome beneath the plunger element. In another aspect, the switch assembly enables a larger area of illumination on an illuminated film by interposing a light pipe between an actuation dome and the film, the light pipe also serving as a plunger element to enable touch actuation by pressing the film, moving the plunger towards the dome and activating the dome.

No. of Pages : 24 No. of Claims : 18

(12) PATENT APPLICATION PUBLICATION
(19) INDIA
(22) Date of filing of Application :12/06/2012
(21) Application No.5171/DELNP/2012 A
(43) Publication Date : 23/10/2015

(54) Title of the invention : NOVEL COMPOUNDS AS RECEPTOR MODULATORS WITH THERAPEUTIC UTILITY

(51) International classification :C07D 333/06
(31) Priority Document No :61/264,038
(32) Priority Date :24/11/2009
(33) Name of priority country :U.S.A.
(86) International Application No :PCT/US2010/057336
Filing Date :19/11/2010
(87) International Publication No :WO 2011/066179
(61) Patent of Addition to Application Number :NA
Filing Date :NA
(62) Divisional to Application Number :NA
Filing Date :NA

(71)**Name of Applicant :**
1)ALLERGAN, INC.
Address of Applicant :2525 DUPONT DRIVE, T2-7H, IRVINE, CA 92612, UNITED STATES OF AMERICA U.S.A.
(72)**Name of Inventor :**
1)TODD M. HEIDELBAUGH
2)PHONG X. NGUYEN

(57) Abstract :
The present invention relates to novel cyclic amine and cycloalkyl derivatives, processes for preparing them, pharmaceutical compositions containing them and their use as pharmaceuticals as modulators of sphingosine- I -phosphate receptors.

No. of Pages : 62 No. of Claims : 17

(12) PATENT APPLICATION PUBLICATION
(21) Application No.5172/DELNP/2012 A
(19) INDIA
(22) Date of filing of Application :12/06/2012
(43) Publication Date : 23/10/2015

(54) Title of the invention : TRANSMITTER AND RECEIVER FOR BROADCASTING DATA IN A BROADCASTING SYSTEM PROVIDING INCREMENTAL REDUNDANCY

(51) International classification :H04L 1/18
(31) Priority Document No :09176176.7
(32) Priority Date :17/11/2009
(33) Name of priority country :EUROPEAN UNION
(86) International Application No :PCT/EP2010/065641
Filing Date :18/10/2010
(87) International Publication No :WO 2011/061031
(61) Patent of Addition to Application Number :NA
Filing Date :NA
(62) Divisional to Application Number :NA
Filing Date :NA

(71)**Name of Applicant :**
1)SONY CORPORATION
Address of Applicant :1-7-1 KONAN, MINATO-KU, TOKYO 108-0075, JAPAN Japan
(72)**Name of Inventor :**
1)LOTHAR STADELMEIER
2)NABIL LOGHIN
3)JOERG ROBERT

(57) Abstract :
The present invention relates to a transmitter (10) and to a corresponding transmission method for broadcasting data in a broadcasting system. To enable a receiver in such a broadcasting system, in particular a moving receiver, to improve the decoding quality, if needed, a transmitter (10) is proposed comprising: - a data input for receiving at least one transmitter input data stream (11,12, ..., In) segmented into input data words (D), - an encoder (14; 141, 142, 143) for error correction code encoding the input data words (D) into codewords (Zl, Z2,Z3, ZA), a codeword comprising a basic codeword portion (B) and an auxiliary codeword portion (A), wherein said encoder (14) is adapted for generating said basic codeword portion (B) from an input data word (D) according to a first code and for generating said auxiliary codeword portion (A) from an input data word (D) according to a second code, said basic codeword portion (B) being provided for regular decoding and said auxiliary codeword portion (A) being provided as incremental redundancy if regular decoding of the codeword by use of the basic codeword portion (B) is erroneous, - a data mapper (16) for mapping the codewords (Zl, 22, 23, 24) onto fi-ames of a transmitter output data stream (01, and - a transmitter unit (1 8) for transmitting said transmitter output data stream (0).

No. of Pages : 56 No. of Claims : 35

(12) PATENT APPLICATION PUBLICATION
(19) INDIA
(22) Date of filing of Application :12/06/2012
(21) Application No.5173/DELNP/2012 A
(43) Publication Date : 23/10/2015

(54) Title of the invention : ADHESIVE COMPOSITE SYSTEM FOR COVERING, CLOSING OR GLUING CELLULAR TISSUE

(51) International classification :C08G 18/10
(31) Priority Document No :09015401.4
(32) Priority Date :12/12/2009
(33) Name of priority country :Germany
(86) International Application No :PCT/EP2010/068985
Filing Date :06/12/2010
(87) International Publication No :WO 2011/069973
(61) Patent of Addition to Application Number :NA
Filing Date :NA
(62) Divisional to Application Number :NA
Filing Date :NA

(71)**Name of Applicant :**
1)BAYER INTELLECTUAL PROPERTY GMBH
Address of Applicant :CREATIVE CAMPUS MONHEIM BLDG. 4865, ALFRED-NOBEL-STR. 10, D 40789 MONHEIM GERMANY Germany
(72)**Name of Inventor :**
1)SEBASTIAN DORR
2)HEIKE HECKROTH
3)CHRISTOPH EGGERT

(57) Abstract :
The invention relates to an adhesive composite system comprising an adhesive layer of a tissue adhesive and a protective layer which is applied to the surface of the adhesive layer, said tissue adhesive being based on hydrophilic polyurethane polymers and the protective layer is water-proof. The invention also relates to a method for producing said adhesive composite system, to an adhesive composite system obtained according to said method, an adhesive composite system which can be used for $ covering, closing or gluing cellular tissue and to the use of the adhesive composite system for producing a product for covering, - closing or gluing cellular tissue.

No. of Pages : 36 No. of Claims : 14

(12) PATENT APPLICATION PUBLICATION
(19) INDIA
(22) Date of filing of Application :12/06/2012
(21) Application No.5174/DELNP/2012 A
(43) Publication Date : 23/10/2015

(54) Title of the invention : 'USE OF LAYER SUPERSTRUCTURES IN WIND POWER PLANTS

(51) International classification :B32B 27/40
(31) Priority Document No :10 2009 058 101.4
(32) Priority Date :12/12/2009
(33) Name of priority country :Germany
(86) International Application No :PCT/EP2010/068992
Filing Date :06/12/2010
(87) International Publication No :WO 2011/069975
(61) Patent of Addition to Application Number :NA
Filing Date :NA
(62) Divisional to Application Number :NA
Filing Date :NA

(71)**Name of Applicant :**
1)BAYER INTELLECTUAL PROPERTY GMBH
Address of Applicant :CREATIVE CAMPUS MONHEIM, BLDG. 4865, ALFRED-NOBEL-STR. 10, D-40789 MONHEIM, GERMANY Germany
(72)**Name of Inventor :**
1)DIRK PASSMANN
2)KLAUS FRANKEN
3)STEFAN LINDNER

(57) Abstract :
The invention relates to the use of layer structures in the production of rotor blades for wind power plants, and to rotor blades for wind power plants.

No. of Pages : 11 No. of Claims : 8

(12) PATENT APPLICATION PUBLICATION
(19) INDIA
(22) Date of filing of Application :12/06/2012
(21) Application No.5175/DELNP/2012 A
(43) Publication Date : 23/10/2015

(54) Title of the invention : ANTI-C4.4A ANTIBODIES AND USES THEREOF

(51) International classification :C07K 16/30
(31) Priority Document No :09178474.4
(32) Priority Date :09/12/2009
(33) Name of priority country :EUROPEAN UNION
(86) International Application No :PCT/EP2010/069216
Filing Date :08/12/2010
(87) International Publication No :WO 2011/070088
(61) Patent of Addition to Application Number :NA
Filing Date :NA
(62) Divisional to Application Number :NA
Filing Date :NA

(71)**Name of Applicant :**
1)BAYER PHARMA AKTIENGESELLSCHAFT
Address of Applicant :MULLERSTRASSE 178, 13353 BERLIN, GERMANY Germany
(72)**Name of Inventor :**
1)LARS LINDEN
2)YONG-JIANG CAO
3)GABRIELE LEDER
4)BEATRIX STELTE-LUDWIG
5)AXEL HARRENGA
6)RICARDA FINNERN
7)FRANK DITTMER
8)ANKE MAYER-BARTSCHMID
9)JUERGEN FRANZ
10)SIMONE GREVEN
11)JORG WILLUDA
12)JAN TEBBE

(57) Abstract :
The present invention provides recombinant antigen-binding regions and antibodies and functional fragments containing such antigen-binding regions that are specific for the membrane-anchored, 29 kDa C4.4a polypeptide, which is over expressed in several tumors, e.g. lung, colorectal, pancreas, prostate, renal and breast cancer. These antibodies, accordingly, can be used to treat these and other disorders and conditions. Antibodies of the invention also can be used in the diagnostics field, as well as for further investigating the role of C4.4a in the progression of disorders associated with cancer. The invention also provides nucleic acid sequences encoding the foregoing antibodies, vectors containing the same, pharmaceutical compositions and kits with instructions for use.

No. of Pages : 238 No. of Claims : 28

(12) PATENT APPLICATION PUBLICATION
(19) INDIA
(22) Date of filing of Application :12/06/2012
(21) Application No.5191/DELNP/2012 A
(43) Publication Date : 23/10/2015

(54) Title of the invention : METHOD AND APPARATUS FOR FORWARDING NON-CONSECUTIVE DATA BLOCKS IN ENHANCED UPLINK TRANSMISSIONS

(51) International classification :H04L 12/28
(31) Priority Document No :60/566,588
(32) Priority Date :29/04/2004
(33) Name of priority country :U.S.A.
(86) International Application No :PCT/US2005/011247
Filing Date :04/04/2005
(87) International Publication No :WO 2005/112357
(61) Patent of Addition to Application Number :NA
Filing Date :NA
(62) Divisional to Application Number :6652/DELNP/2006
Filed on :09/11/2006

(71)**Name of Applicant :**
1)INTERDIGITAL TECHNOLOGY CORPORATION
Address of Applicant :3411 SILVERSIDE ROAD, CONCORD PLAZA, SUITE 105, HAGLEY BUILDING, WILMINGTON DE 19810, U.S.A. U.S.A.
(72)**Name of Inventor :**
1)ZHANG, GUODONG
2)TERRY, STEPHEN, E.
3)DICK, STEPHEN, G.

(57) Abstract :
A method and apparatus for forwarding non-consecutive data blocks in enhanced uplink (EU) transmissions. A wireless transmit/receive unit (WTRU) and one or more Node-Bs include one or more automatic repeat request (ARQ)/hybrid-ARQ (H-ARQ) processes for supporting an enhanced dedicated channel (E-DCH). Data blocks transmitted by the WTRU are re-ordered in a re-ordering entity located in the Node-B(s) or a radio network controller (RNC). Once a missing data block is identified, a data forwarding timer in the Node-B(s) or RNC is initiated and subsequent WTRU transmissions are monitored to determine whether the missing data block has been discarded by the WTRU. Upon recognition of the discard of the missing data block, the non-consecutive data blocks are forwarded to higher layers. 1 1 2 8 SYSTEM 100

No. of Pages : 18 No. of Claims : 8

(12) PATENT APPLICATION PUBLICATION
(21) Application No.5192/DELNP/2012 A
(19) INDIA
(22) Date of filing of Application :12/06/2012
(43) Publication Date : 23/10/2015

(54) Title of the invention : AQUEOUS SOLUTION COMPRISING 3-QUINUCLIDINONES FOR THE TREATMENT HYPERPROLIFERATIVE, AUTOIMMUNE AND HEART DISEASE

(51) International classification :A61K 31/439
(31) Priority Document No :61/296,964
(32) Priority Date :21/01/2010
(33) Name of priority country :U.S.A.
(86) International Application No :PCT/EP2011/050854
Filing Date :21/01/2011
(87) International Publication No :WO 2011/089234
(61) Patent of Addition to Application Number :NA
Filing Date :NA
(62) Divisional to Application Number :NA
Filing Date :NA

(71)**Name of Applicant :**
1)APREA AB
Address of Applicant :NOBELS VAG 3, S-171 65 SOLNA (SE) Sweden
(72)**Name of Inventor :**
1)BYSTROM, STYRBJORN
2)LILJEBRIS, CHARLOTTA
3)CARAM-LELHAM, NINUS

(57) Abstract :
A liquid composition that is an aqueous solution of a compound of formula (I), wherein the aqueous solution has a pH from about 3.0 to about 5.0. The liquid composition may be used in the treatment of a disorder selected from hyperproliferative diseases, autoimmune diseases and heart diseases.

No. of Pages : 31 No. of Claims : 17

(12) PATENT APPLICATION PUBLICATION
(19) INDIA
(22) Date of filing of Application :12/06/2012
(21) Application No.5193/DELNP/2012 A
(43) Publication Date : 23/10/2015

(54) Title of the invention : METHOD FOR ACCUMULATION OF POLYHYDROXYALKANOATES IN BIOMASS WITH ON-LINE MONITORING FOR FEED RATE CONTROL AND PROCESS TERMINATION

(51) International classification :C12P 7/62
(31) Priority Document No :61/285,210
(32) Priority Date :10/12/2009
(33) Name of priority country :U.S.A.
(86) International Application No :PCT/IB2010/055745
Filing Date :10/12/2010
(87) International Publication No :WO 2011/070544
(61) Patent of Addition to Application Number :NA
Filing Date :NA
(62) Divisional to Application Number :NA
Filing Date :NA

(71)**Name of Applicant :**
1)VEOLIA WATER SOLUTION & TECHNOLOGIES SUPPORT
Address of Applicant :IMMEUBLE L'AQUARENE 1, PLACE MONTGOLFIER, F-94417 SAINT-MAURICE CEDEX (FR) France
(72)**Name of Inventor :**
1)WERKER, ALAN, GIDEON
2)BENGTSSON, SIMON, OLOF, HARALD
3)KARLSSON, CARL, ANTON, BORJE

(57) Abstract :
A method or process for producing polyhydroxyalkanoates (PHAs) in biomass. The process entails feeding an organic carbon containing substrate to biomass enriched in PHA accumulating bacteria. Particularly the process entails intermittently supplying the substrate to the biomass at least three separate times over a selected period. The object of the process is to produce PHA having a relatively high molecular weight, at least 400,000 glmole. By controlling the frequency at which the substrate is supplied to the biomass and by feeding a sufficient amount of the substrate to the biomass, the method or process produces the PHA having the relatively high molecular weight. 10 100 1000 Stimulus Concentration (slsf)

No. of Pages : 44 No. of Claims : 10

(12) PATENT APPLICATION PUBLICATION
(21) Application No.5194/DELNP/2012 A
(19) INDIA
(22) Date of filing of Application :12/06/2012
(43) Publication Date : 23/10/2015

(54) Title of the invention : USER EQUIPMENT AND METHOD FOR EXECUTING A SERVICE

(51) International classification :H04L 29/06
(31) Priority Document No :NA
(32) Priority Date :NA
(33) Name of priority country :NA
(86) International Application No :PCT/EP2010/050421
Filing Date :14/01/2010
(87) International Publication No :WO 2011/085816
(61) Patent of Addition to Application Number :NA
Filing Date :NA
(62) Divisional to Application Number :NA
Filing Date :NA

(71)**Name of Applicant :**
1)TELEFONAKTIEBOLAGET LM ERICSSON (PUBL)
Address of Applicant :SE-164 83 STOCKHOLM (SE) Sweden
(72)**Name of Inventor :**
1)DEN HARTOG, JOS

(57) Abstract :
User equipment and method for executing an application, which uses application data, and which is executed in an Application Server in a VoIP based telecommunications network. The method comprises providing a user equipment including a database having the data stored therein, wherein the user equipment further includes an Application Server. The method further comprises invoking the SIP-AS included in the user equipment by a network node of the telecommunications network, providing, within the user equipment, the data to the Application Server included in the user equipment, 0 executing the application, using the data, by the Application Server included in the user equipment, and communicating a result of executing the application from the Application Server included in the user equipment to the network. IyI1 Management system Applic Logic ---to Applic data SIP AS -12 ISC interface ff IMS Core network (P-CSCF, S-CSCF, etc) I I Operator network I Fig. 1 t 16 \

No. of Pages : 28 No. of Claims : 13

(12) PATENT APPLICATION PUBLICATION
(19) INDIA
(22) Date of filing of Application :12/06/2012
(21) Application No.5195/DELNP/2012 A
(43) Publication Date : 23/10/2015

(54) Title of the invention : SYSTEMS AND METHODS FOR A REED VALVE MODULE AND VALVE ASSEMBLY

(51) International classification :F16K 15/16
(31) Priority Document No :61/262,248
(32) Priority Date :18/11/2009
(33) Name of priority country :U.S.A.
(86) International Application No :PCT/US2010/057193
Filing Date :18/11/2010
(87) International Publication No :WO 2011/063096
(61) Patent of Addition to Application Number :NA
Filing Date :NA
(62) Divisional to Application Number :NA
Filing Date :NA

(71)**Name of Applicant :**
1)MOHAMED, ZAHROOF
Address of Applicant :16122 CROOKED LAKE WAY N. CYPRESS, TEXAS 77433, USA U.S.A.
(72)**Name of Inventor :**
1)MOHAMED, ZAHROOF

(57) Abstract :
Systems And Methods For A Reed Valve Module And Valve Assembly This invention relates to systems and methods for a reed valve module and valve assembly. In one embodiment, the reed valve module includes a body having a single or a plurality of sealing faces, a seat and flow passages from the seat to the sealing face(s). The reed valve module also includes one or a plurality of petals. In some embodiments, the module further includes a petal guard. Novel reed valve assemblies are disclosed incorporating the reed valve modules. One embodiment of the reed valve assembly includes a seat with a plurality of fluid conduits, a retainer plate with a plurality of fluid conduits and a means for receiving recesses between the seat plate and retainer plate. Other devices, systems, and methods related to reed valve modules and valve assemblies are also disclosed.

No. of Pages : 37 No. of Claims : 30

(12) PATENT APPLICATION PUBLICATION
(19) INDIA
(22) Date of filing of Application :19/04/2012
(21) Application No.3415/DELNP/2012 A
(43) Publication Date : 23/10/2015

(54) Title of the invention : TEST SET FOR A PHOTOMETRIC MEASURING DEVICE AND PHOTOMETRIC MEASURING METHOD FOR A SAMPLE LIQUID

(51) International classification :B01L 3/00
(31) Priority Document No :A 1661/2009
(32) Priority Date :22/10/2009
(33) Name of priority country :Austria
(86) International Application No :PCT/EP2010/062163
Filing Date :20/08/2010
(87) International Publication No :WO 2011/047902
(61) Patent of Addition to Application Number :NA
Filing Date :NA
(62) Divisional to Application Number :NA
Filing Date :NA

(71)**Name of Applicant :**
1)BONECKER, GERHARD
Address of Applicant :SCHUTZENGELSTRASSE 41, CH-6340 BAAR, SWITZERLAND, Switzerland
(72)**Name of Inventor :**
1)BONECKER, GERHARD

(57) Abstract :
The invention relates to a test set for a photometric measuring device, comprising a mixing container (1) which receives a first fluid (5) in its interior (4) and a closing element which is removable from its filling opening (3), and a dosing container (8) which contains a second fluid (13) in a sealed hollow chamber (9), with the hollow chamber (9) being sealed on one side by a displaceable sealing plunger (11) and on the opposite side by a movable plug (10), and with the dosing container (8) being insertable in a sealing manner into the filling opening (3) of the mixing container (1). For the purpose of simplifying the input of the sample, the dosing container (8) comprises an integrated sample-taking device (21) which after the insertion of the dosing container (8) in the filling opening (3) of the mixing container (1) is in contact with the first fluid (5) present in the mixing container (1).

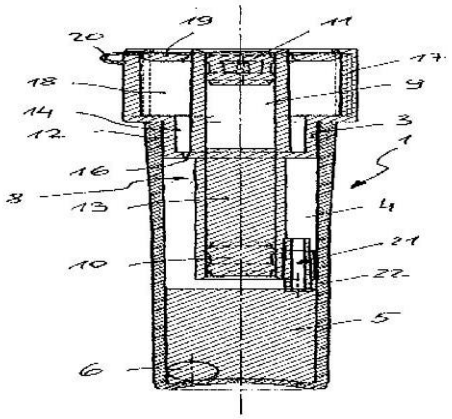

Fig. 3

No. of Pages : 14 No. of Claims : 11

(12) PATENT APPLICATION PUBLICATION
(19) INDIA
(22) Date of filing of Application :19/04/2012

(21) Application No.3416/DELNP/2012 A
(43) Publication Date : 23/10/2015

(54) Title of the invention : REDUCING OVERHEAD ON VOICE TRAFFIC

(51) International classification :H04L 29/06
(31) Priority Document No :NA
(32) Priority Date :NA
(33) Name of priority country :NA
(86) International Application No :PCT/EP2010/055901
Filing Date :30/04/2010
(87) International Publication No :WO 2011/134527
(61) Patent of Addition to Application Number :NA
Filing Date :NA
(62) Divisional to Application Number :NA
Filing Date :NA

(71)**Name of Applicant :**
1)NOKIA SIEMENS NETWORKS OY
Address of Applicant :KARAPORTTI 3, FI-02610 ESPOO, FINLAND, Finland
(72)**Name of Inventor :**
1)VULKAN, CSABA
2)RAKOS, ATTILA
3)VINCZE, ZOLTAN
4)DROZDY, ARPAD

(57) Abstract :
The present invention provides a method, apparatus, gateway and a computer program product for reducing overhead on voice traffic within a packet based communication system. The present invention discloses collecting a plurality of packets to be multiplexed in an aggregated frame, measuring a number of received packets within a predetermined time period, and, if the number of received packets reaches a predetermined value, sending the aggregated frame including the collected packets.

Fig. 6

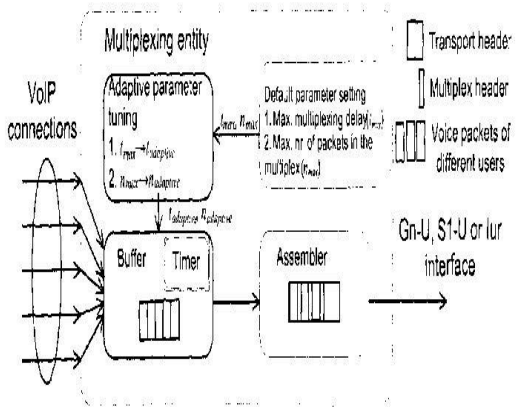

No. of Pages : 66 No. of Claims : 20

(12) PATENT APPLICATION PUBLICATION
(19) INDIA
(22) Date of filing of Application :19/04/2012
(21) Application No.3417/DELNP/2012 A
(43) Publication Date : 23/10/2015

(54) Title of the invention : EXPANDABLE IMPLANT

(51) International classification :A61B 17/72
(31) Priority Document No :61/265,201
(32) Priority Date :30/11/2009
(33) Name of priority country :U.S.A.
(86) International Application No :PCT/US2010/058284
Filing Date :30/11/2010
(87) International Publication No :WO 2011/066522
(61) Patent of Addition to Application Number :NA
Filing Date :NA
(62) Divisional to Application Number :NA
Filing Date :NA

(71)**Name of Applicant :**
1)SYNTHES GMBH
Address of Applicant :EIMATTSTRASSE 3, CH-4436,OBERDORF, SWITZERLAND Switzerland
(72)**Name of Inventor :**
1)BAUMGARTNER, ADRIAN
2)FRIGG, ROBERT
3)VOISARD, CYRIL
4)NARDINI, RETO
5)SCHMIDLI, DIETER
6)BRUNNER, CHRISTIAN
7)SALADIN, STEFAN

(57) Abstract :
An implant system includes a fixation device that, in turn can include an expandable implant alone or in combination with an auxiliary implant. The expandable implant includes an expandable implant body that is made from an expandable material. The expandable material includes a polymer matrix and an expandable gas source contained within at least a portion of the polymer matrix. The implant system can further include an energy source configured to heat the polymer matrix to a temperature above its glass transition temperature, thereby causing the gas source to expand inside the polymer matrix. The fixation device can further include an insertion instrument configured to implant the fixation device into an anatomical cavity.

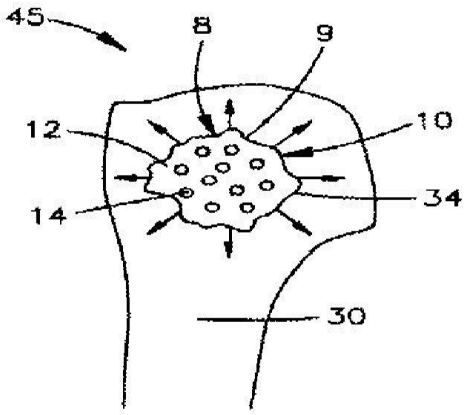

Fig.1A

No. of Pages : 49 No. of Claims : 34

(12) PATENT APPLICATION PUBLICATION
(19) INDIA
(22) Date of filing of Application :13/06/2012
(21) Application No.5207/DELNP/2012 A
(43) Publication Date : 23/10/2015

(54) Title of the invention : A METHOD FOR CONTROLLING CULTURE PARAMETERS IN A BIOREACTOR

(51) International classification :C12Q 3/00
(31) Priority Document No :0951006-6
(32) Priority Date :22/12/2009
(33) Name of priority country :Sweden
(86) International Application No :PCT/SE2010/051425
Filing Date :20/12/2010
(87) International Publication No :WO 2011/078773
(61) Patent of Addition to Application Number :NA
Filing Date :NA
(62) Divisional to Application Number :NA
Filing Date :NA

(71)**Name of Applicant :**
1)GE HEALTHCARE BIO-SCIENCES AB
Address of Applicant :PATENT DEPARTMENT, BJORKGATAN 30 S-751 84 UPPSALA, SWEDEN Sweden
(72)**Name of Inventor :**
1)KLAUS GEBAUER
2)EVA LINDSKOG
3)LARS MAGNUSSON

(57) Abstract :
A method for controlling at least one culture parameter in a bioreactor bag (1 ; 3 la, 3 1 b) provided in a bioreactor system, said method comprising the steps of: 5 - providing bioreactor information to a control unit (5; 35) controlling the bioreactor system; - controlling the at least one culture parameter in dependence of the bioreactor information.

No. of Pages : 16 No. of Claims : 19

(12) PATENT APPLICATION PUBLICATION
(19) INDIA
(22) Date of filing of Application :13/06/2012
(21) Application No.5208/DELNP/2012 A
(43) Publication Date : 23/10/2015

(54) Title of the invention : CATALYTIC DEWAXING PROCESS

(51) International classification :C10G 47/12
(31) Priority Document No :61/284,835
(32) Priority Date :24/12/2009
(33) Name of priority country :U.S.A.
(86) International Application No :PCT/US2010/061542
Filing Date :21/12/2010
(87) International Publication No :WO 2011/079116
(61) Patent of Addition to Application Number :NA
Filing Date :NA
(62) Divisional to Application Number :NA
Filing Date :NA

(71)**Name of Applicant :**
1)EXXONMOBIL RESEARCH AND ENGINEERING COMPANY
Address of Applicant :1545 ROUTE 22, EAST, P.O.BOX 900, ANNANDALE, NJ 08801-0900, USA U.S.A.
(72)**Name of Inventor :**
1)CHRISTINE N. ELIA
2)TIMOTHY LEE HILBERT
3)LOUIS FRANCIS BURNS
4)ERIC D. JOSECK
5)JEENOK T. KIM
6)SYLVAIN S. HANTZER

(57) Abstract :
In a catalytic dewaxing process, a catalyst comprising from 40 to 80 wt% of ZSM-48 having a silica to alumina molar ratio of less than 200: 1 and from 0.3 to 1.5 wt% of a metal or metal compound from Groups 8 to 10 of the Periodic Table of the Elements is provided in a reaction zone. The catalyst is periodically contacted in the reaction zone under dewaxing conditions with a first hydrocarbon feedstock having a wax content of less than 50 wt% and with a second hydrocarbon feedstock having a wax content of 50 wt% or more.

No. of Pages : 21 No. of Claims : 12

(12) PATENT APPLICATION PUBLICATION
(19) INDIA
(22) Date of filing of Application :19/04/2012
(21) Application No.3410/DELNP/2012 A
(43) Publication Date : 23/10/2015

(54) Title of the invention : INDUCTION HEATING METHOD IMPLEMENTED IN A DEVICE INCLUDING MAGNETICALLY COUPLED INDUCTORS

(51) International classification :H05B 6/02
(31) Priority Document No :0957321
(32) Priority Date :19/10/2009
(33) Name of priority country :France
(86) International Application No :PCT/FR2010/052216
Filing Date :19/10/2010
(87) International Publication No :WO 2011/048316
(61) Patent of Addition to Application Number :NA
Filing Date :NA
(62) Divisional to Application Number :NA
Filing Date :NA

(71)**Name of Applicant :**
1)ELECTRICITE DE FRANCE
Address of Applicant :22-30, AVENUE DE WAGRAM, F-75008 PARIS, FRANCE France
2)CENTRE NATIONAL DE AL RECHERCHE SCIENTIFIQUE-CNRS-
3)INSTITUT NATIONAL POLYTECHNIQUE DE TOULOUSE
(72)**Name of Inventor :**
1)PATEAU, OLIVIER
2)NEAU, YVES
3)LEFEVRE, YVAN
4)LADOUX, PHILIPPE
5)MAUSSION, PASCAL
6)MANOT, GILBERT

(57) Abstract :
The invention relates to an induction heating method implemented in a device for heating a metal part, the device including magnetically coupled inductors (Ind1, Ind2,..., Indp), each inductor being powered by a dedicated inverter (O1, O2,..., Op) combined with a capacitor (C1, C2, ..., Cp) such as to form an oscillating circuit (OC1, OC2, ..., OCp). The oscillating circuits have at least approximately the same resonance frequency, each inverter is controlled by a control unit (Ml, M2, ..., Mp) such as to vary the amplitude and the phase of the current passing through the corresponding inductor, the device also including a means for determining said current as well as a means for determining an actual temperature profile (θ1 mes, θ2 mes,..., θn mes) of said part. The method includes the following steps: a) comparing said actual temperature profile with a reference temperature profile (θ1 ref, θ2 ref,..., θn ref) and calculating a profile of the reference power density (Dprefl, Dpref2, ..., Dprefn) which the heating device must inject into said part; b) calculating the target currents which the inverters must produce in order for the currents of the inductors to reach target values (I1 ref, 12 ref, ..., IP ref) that are suitable for injecting said reference power density profile into said part; c) determining the currents passing through the inductors in order to compare said currents with said target values and determine current deviations (δ11 corr, δ12 corr, ..., δ1p corr) to be corrected, and sending correction instructions to said control units (M1, M2, ..., Mp) in accordance with said current deviations.

No. of Pages : 26 No. of Claims : 10

(12) PATENT APPLICATION PUBLICATION
(19) INDIA
(22) Date of filing of Application :13/06/2012
(21) Application No.5211/DELNP/2012 A
(43) Publication Date : 23/10/2015

(54) Title of the invention : METHOD AND SYSTEM FOR DRIVING OF A VEHICLE

(51) International classification :F16H 59/66
(31) Priority Document No :0950973-8
(32) Priority Date :17/12/2009
(33) Name of priority country :Sweden
(86) International Application No :PCT/SE2010/051401
Filing Date :16/12/2010
(87) International Publication No :WO 2011/075067
(61) Patent of Addition to Application Number :NA
Filing Date :NA
(62) Divisional to Application Number :NA
Filing Date :NA

(71)**Name of Applicant :**
1)SCANIA CV AB
Address of Applicant :S-151 87 SODERTALJE, SWEDEN Sweden
(72)**Name of Inventor :**
1)ROGER HALLEBERG
2)ANDERS JENSEN

(57) Abstract :
The present invention relates to a method for control of a vehicles,gearbox which is connected to a combustion engine and can beset to a number of different transmission ratios, 5 which method, when the vehicle is running in a low transmission ratio and at an engine speed below that at which the torqueplateau for said low ratio is reached, in a situation where there is a reduced need for power output to propel said vehicle, comprises: 10 - determining a speed parameter for said vehicle, - switching the gearbox to a higher transmission ratio than said low ratio when said speed parameter fulfils a first criterion.

No. of Pages : 28 No. of Claims : 18

(12) PATENT APPLICATION PUBLICATION
(19) INDIA
(22) Date of filing of Application :13/06/2012
(21) Application No.5212/DELNP/2012 A
(43) Publication Date : 23/10/2015

(54) Title of the invention : OIL OR FAT COMPOSITION

(51) International classification :C11C 3/00
(31) Priority Document No :2009-283660
(32) Priority Date :15/12/2009
(33) Name of priority country :Japan
(86) International Application No :PCT/JP2010/072478
Filing Date :14/12/2010
(87) International Publication No :WO 2011/074575
(61) Patent of Addition to Application Number :NA
Filing Date :NA
(62) Divisional to Application Number :NA
Filing Date :NA

(71)**Name of Applicant :**
1)KAO CORPORATION
Address of Applicant :14-10, NIHONBASHI-KAYABACHO 1-CHOME, CHUO-KU, TOKYO 103-8210, JAPAN Japan
(72)**Name of Inventor :**
1)RIKA HOMMA
2)MASAO SHIMIZU
3)JUNYA MORIWAKI
4)MINORU KASE
5)TETSUYA ABE
6)SHINPEI FUKUHARA
7)TOSHITERU KOMATSU
8)KEIJI SHIBATA

(57) Abstract :
Provided is an oil or fat composition, which has an MCPD-FS content (ppm) of 13 ppm or less, the content being measured by a Deutsche Gesellschaft fiir Fettwissenschaft (DGF) standard method C-I11 18(09), has a diacylglycerol content of 15 mass% or more, and is subjected to deodorization treatment.

No. of Pages : 33 No. of Claims : 2

(12) PATENT APPLICATION PUBLICATION
(21) Application No.5214/DELNP/2012 A
(19) INDIA
(22) Date of filing of Application :13/06/2012
(43) Publication Date : 23/10/2015

(54) Title of the invention : METHOD AND ARRANGEMENT FOR REPORTING CHANNEL STATE INFORMATION IN A TELECOMMUNICATION SYSTEM

(51) International classification :H04W 72/04
(31) Priority Document No :61/411,693
(32) Priority Date :09/11/2010
(33) Name of priority country :U.S.A.
(86) International Application No :PCT/SE2011/050373
Filing Date :31/03/2011
(87) International Publication No :WO 2012/064249
(61) Patent of Addition to Application Number :NA
Filing Date :NA
(62) Divisional to Application Number :NA
Filing Date :NA

(71)**Name of Applicant :**
1)TELEFONAKTIEBOLAGET LM ERICSSON (PUBL)
Address of Applicant :SE-164 83 STOCKHOLM (SE) Sweden
(72)**Name of Inventor :**
1)LINDBOM, LARS
2)JONGREN, GEORGE
3)PARKVALL, STEFAN

(57) Abstract :
A method and an arrangement (800) in a user equipment (420) for reporting Channel State Information, CSI, and a method and an arrangement (1000) in a base station (410) for obtaining CSI are provided. The user equipment (420) is in connection with the base station (410) in a cellular communication network (400). After receiving a receiving (702) a grant in a subframe n to be used for CSI reporting, from the base station, the user equipment determines (703) subfiame type of a subframe n+p. The user equipment then reports (704) to the base station, CSI reflecting channel conditions in the subfiame type of subfiame n+p. p is a variable value.

No. of Pages : 40 No. of Claims : 46

(12) PATENT APPLICATION PUBLICATION
(19) INDIA
(22) Date of filing of Application :16/04/2012
(21) Application No.3254/DELNP/2012 A
(43) Publication Date : 23/10/2015

(54) Title of the invention : A PROCESS AND APPARATUS FOR GRADING AND PACKING FRUIT

(51) International classification :B65B 5/00
(31) Priority Document No :2009904533
(32) Priority Date :18/09/2009
(33) Name of priority country :Australia
(86) International Application No :PCT/AU2010/001218
Filing Date :17/09/2010
(87) International Publication No :WO 2011/032226
(61) Patent of Addition to Application Number :NA
Filing Date :NA
(62) Divisional to Application Number :NA
Filing Date :NA

(71)**Name of Applicant :**
1)FADA PTY LTD
Address of Applicant :228 BOOGAN ROAD, MOURILYAN, QUEENSLAND 4858, AUSTRALIA; Australia
(72)**Name of Inventor :**
1)SCIACCA, FRANCESCO SANTO

(57) Abstract :
A process for grading and packing produce including the steps of separating the produce into single units, aligning the single units such that a stem portion of each single unit is oriented in the same direction, imaging each single unit using an optical mechanism for capturing at least one image of the produce and comparing the at least one captured image to one or more control images to establish at least quality grade and size based on the comparison, applying sorting identification indicia to the exterior of the single unit based on the imaging; and packing the produce into a package based on the quality grade and size, with each package containing a plurality of single units of the same quality grade and a similar size.

No. of Pages : 25 No. of Claims : 19

(12) PATENT APPLICATION PUBLICATION
(19) INDIA
(22) Date of filing of Application :18/04/2012
(21) Application No.3355/DELNP/2012 A
(43) Publication Date : 23/10/2015

(54) Title of the invention : ELECTROMAGNETIC CASTING APPARATUS FOR SILICON •

(51) International classification :B60H
(31) Priority Document No :NA
(32) Priority Date :NA
(33) Name of priority country :NA
(86) International Application No :PCT/JP2009/069685
Filing Date :20/11/2009
(87) International Publication No : NA
(61) Patent of Addition to Application Number :NA
Filing Date :NA
(62) Divisional to Application Number :NA
Filing Date :NA

(71)**Name of Applicant :**
1)CONSARC CORPORATION
Address of Applicant :100 Indel Avenue Rancocas New Jersey 08073 United States of America U.S.A.
(72)**Name of Inventor :**
1)KANEKO KYOJIRO

(57) Abstract :
This invention aims at providing a silicon electromagnetic casting apparatus for accurate and easy manufacturing of high quality silicon ingots. This apparatus uses a furnace vessel 100 a conductive crucible 200 installed in the internal part of the furnace vessel 100 and an induction coil 300 installed on the outer circumference of the crucible 200. Constant pressure is maintained in the internal part of the furnace vessel 100 using a prescribed gas and the silicon inside the above mentioned crucible 200 is solidified after melting it by induction heating by applying voltage on the induction coil 300. The induction coil 300 is made by placing 2 induction coils 310 and 320 having different induction frequencies one above the other.

No. of Pages : 34 No. of Claims : 15

(12) PATENT APPLICATION PUBLICATION
(19) INDIA
(22) Date of filing of Application :18/04/2012

(21) Application No.3357/DELNP/2012 A
(43) Publication Date : 23/10/2015

(54) Title of the invention : LOW FAT WHIPPABLE EMULSIONS WITH DIETARY FIBERS

(51) International classification :A23L 1/39
(31) Priority Document No :61/250,335
(32) Priority Date :09/10/2009
(33) Name of priority country :U.S.A.
(86) International Application No :PCT/US2010/052183
Filing Date :11/10/2010
(87) International Publication No :WO 2011/044557
(61) Patent of Addition to Application Number :NA
Filing Date :NA
(62) Divisional to Application Number :NA
Filing Date :NA

(71)**Name of Applicant :**
1)RICH PRODUCTS CORPORATION
Address of Applicant :1150 NIAGARA STREET, BUFFALO, NEW YORK, 14213, USA U.S.A.
(72)**Name of Inventor :**
1)SHARMA SHRI K.
2)GUTIERREZ DEL TORO ABELARDO
3)SHARMA AMAN K.

(57) Abstract :
Provided are methods and compositions for low fat toppings containing fiber and having properties mimicking a higher fat composition. The method comprises preparing the composition such that the fiber is hydrated thereby providing desirable mouth-feel and organoleptic properties.

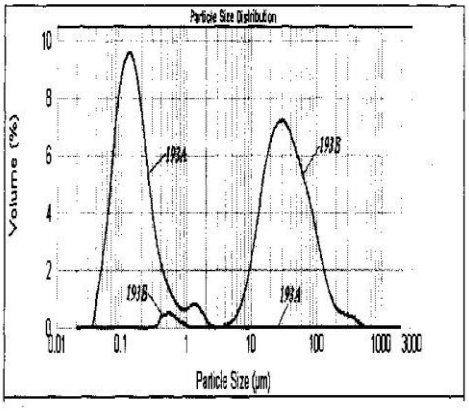

Figure 2

No. of Pages : 18 No. of Claims : 13

(12) PATENT APPLICATION PUBLICATION
(19) INDIA
(22) Date of filing of Application :18/04/2012

(21) Application No.3358/DELNP/2012 A
(43) Publication Date : 23/10/2015

(54) Title of the invention : SECRETORY PROTEIN BIOMARKERS FOR HIGH EFFICIENCY PROTEIN EXPRESSION

(51) International classification :C12P 21/02
(31) Priority Document No :61/259,527
(32) Priority Date :09/11/2009
(33) Name of priority country :U.S.A.
(86) International Application No :PCT/US2010/055953
Filing Date :09/11/2010
(87) International Publication No :WO 2011/057239
(61) Patent of Addition to Application Number :NA
Filing Date :NA
(62) Divisional to Application Number :NA
Filing Date :NA

(71)**Name of Applicant :**
1)ABBOTT LABORATORIES
Address of Applicant :100 ABBOTT PARK ROAD, ABBOTT PARK, IL 60064-6008, U.S.A. U.S.A.
(72)**Name of Inventor :**
1)HOSSLER PATRICK
2)CORREIA IVAN R.

(57) Abstract :
The instant invention relates to the field of protein production, and in particular is relates to compositions and processes for improving the production levels of recombinant proteins expressed in host cells.

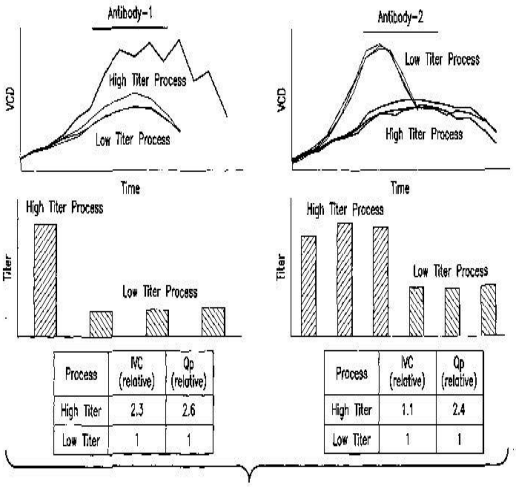

Process	IVC (relative)	Qp (relative)
High Titer	2.3	2.6
Low Titer	1	1

Process	IVC (relative)	Qp (relative)
High Titer	1.1	2.4
Low Titer	1	1

FIG. 1

No. of Pages : 44 No. of Claims : 16

(12) PATENT APPLICATION PUBLICATION
(19) INDIA
(22) Date of filing of Application :13/06/2012
(21) Application No.5222/DELNP/2012 A
(43) Publication Date : 23/10/2015

(54) Title of the invention : TANK ASSEMBLY AND METERING SYSTEMS FOR A REDUCING AGENT

(51) International classification :F01N 3/20
(31) Priority Document No :10 2010 004 614.0
(32) Priority Date :13/01/2010
(33) Name of priority country :Germany
(86) International Application No :PCT/EP2010/063824
Filing Date :20/09/2010
(87) International Publication No :WO 2011/085830
(61) Patent of Addition to Application Number :NA
Filing Date :NA
(62) Divisional to Application Number :NA
Filing Date :NA

(71)**Name of Applicant :**
1)EMITEC GESELLSCHAFT FUR EMISSIONSTECHNOLOGIE MBH
Address of Applicant :HAUPTSTRAE 128, 53797 LOHMAR (DE) Germany
(72)**Name of Inventor :**
1)HODGSON, JAN
2)SCHEPERS, SVEN
3)BRUCK, ROLF

(57) Abstract :
The invention relatesto a device (I) for providing a liquid reducing agent, comprising a reducing agent tank (2) having a tank bottom (3) for storing a reducing agent, the tank bottom comprising a separate chamber (4), and a metering unit (6) for withdrawing reducing agent from the reducing agent tank (2) at a withdrawal point (7) arranged on the separate chamber (4), wherein the metering unit (6) is arranged within the separate chamber (4).

No. of Pages : 34 No. of Claims : 18

(12) PATENT APPLICATION PUBLICATION
(21) Application No.5223/DELNP/2012 A
(19) INDIA
(22) Date of filing of Application :13/06/2012
(43) Publication Date : 23/10/2015

(54) Title of the invention : DYNAMIC CENTRALIZED UNIT DETERMINATION IN A CREDIT CONTROL CHARGING SYSTEM

(51) International classification :H01J
(31) Priority Document No :12/650,365
(32) Priority Date :30/12/2009
(33) Name of priority country :U.S.A.
(86) International Application No :PCT/SE2010/051205
Filing Date :04/11/2010
(87) International Publication No :WO 2011/081592
(61) Patent of Addition to Application Number :NA
Filing Date :NA
(62) Divisional to Application Number :NA
Filing Date :NA

(71)**Name of Applicant :**
1)TELEFONAKTIEBOLAGET LM ERICSSON (PUBL)
Address of Applicant :SE-164 83 STOCKHOLM (SE) Sweden
(72)**Name of Inventor :**
1)AHLGREN, PETTER
2)KARLSSON, MARCUS

(57) Abstract :
A charging system includes a rating engine, a session control module, and a charging unit determination module. The session control module receives a request for service units, associated with a charging session, from a client or service element, and obtains one or more input parameters from the request for service units. The charging unit determination module obtains account data associated with the request for service units, determines at least one charging session related parameter based on the one or more input parameters and/or the account data, and pass the at least one charging session related parameter to the rating engine. The rating engine grants service units based on the at least one charging session related parameter, and forwards an indication of the granted service units to the session control module for return to the client or service element.

No. of Pages : 44 No. of Claims : 18

(12) PATENT APPLICATION PUBLICATION
(19) INDIA
(22) Date of filing of Application :18/04/2012
(21) Application No.3382/DELNP/2012 A
(43) Publication Date : 23/10/2015

(54) Title of the invention : ELECTROLUMINESCENT MATERIALS COMPRISING FLUORENE DERIVATIVES

(51) International classification :C07C
(31) Priority Document No :0917083.8
(32) Priority Date :30/09/2009
(33) Name of priority country :U.K.
(86) International Application No :PCT/GB2010/001818
Filing Date :29/09/2010
(87) International Publication No : NA
(61) Patent of Addition to Application Number :NA
Filing Date :NA
(62) Divisional to Application Number :NA
Filing Date :NA

(71)**Name of Applicant :**
1)LOMOX LIMITED
Address of Applicant :GTI Incubation Centre Suite Ty Mentor Abercynon CF45 4SN South Wales United Kingdom U.K.
(72)**Name of Inventor :**
1)Gene Karl KOCH

(57) Abstract :
OLED compounds of the general structure: B-S-A-S-B in which rod-like nuclei A comprise a condensed aromatic ring structure in turn comprising fluorene ring structures condensed with at least one additional fluorene ring structures wherein the fluorene ring systems comprised by the condensed aromatic structure are substituted at the 9-position and in which the 9-positions of the fluorenes are not susceptible to oxidation.

No. of Pages : 70 No. of Claims : 102

(12) PATENT APPLICATION PUBLICATION
(21) Application No.3383/DELNP/2012 A
(19) INDIA
(22) Date of filing of Application :18/04/2012
(43) Publication Date : 23/10/2015

(54) Title of the invention : ELECTROLUMINESCENT THIOPHENE DERIVATIVES

(51) International classification :C07C
(31) Priority Document No :0917087.9
(32) Priority Date :30/09/2009
(33) Name of priority country :U.K.
(86) International Application No :PCT/GB2010/001817
Filing Date :29/09/2010
(87) International Publication No : NA
(61) Patent of Addition to Application Number :NA
Filing Date :NA
(62) Divisional to Application Number :NA
Filing Date :NA

(71)**Name of Applicant :**
1)LOMOX LIMITED
Address of Applicant :GTI Incubation Centre Suite Ty Mentor Abercynon CF45 4SN South Wales United Kingdom U.K.
(72)**Name of Inventor :**
1)Gene Karl KOCH

(57) Abstract :
OLED compounds of the general structure: (B-S-)n-A-(-S-B)m Structure 1 wherein the rod-like molecular nucleus A comprises the structure: -Ar(-T-Ar)p- Structure 2 wherein T comprises a diradical.

No. of Pages : 22 No. of Claims : 28

(12) PATENT APPLICATION PUBLICATION
(21) Application No.3384/DELNP/2012 A
(19) INDIA
(22) Date of filing of Application :18/04/2012
(43) Publication Date : 23/10/2015

(54) Title of the invention : EXTENSIBLE CLASP FOR A BRACELET IN PARTICULAR A WATCHSTRAP

(51) International classification :B60H
(31) Priority Document No :01629/09
(32) Priority Date :26/10/2009
(33) Name of priority country :Switzerland
(86) International Application No :PCT/IB2010/002550
Filing Date :08/10/2010
(87) International Publication No : NA
(61) Patent of Addition to Application Number :NA
Filing Date :NA
(62) Divisional to Application Number :NA
Filing Date :NA

(71)**Name of Applicant :**
1)THI TECHNOLOGIES HORLOGˆRE INDUSTRIELLE S.A.
Address of Applicant :Chemin de lEpinglier 11 CH-1242 Satigny Switzerland. Switzerland
(72)**Name of Inventor :**
1)Georges L‰GER
2)Arnaud GIRARDOT

(57) Abstract :
The invention relates to a clasp having an extending loop for a bracelet enabling the length of the bracelet to be adjusted with the clasp in the closed position. The clasp comprises for said purpose: first and second leaves (1, 2) pivotably connected relative to one another at a first end; a cover (3) pivotably connected to a second end of the first leaf (1) and arranged such as to be connected to a first strand of the bracelet; a mobile tip (4) arranged on a second end of the second leaf (2) in order to be connected to a second strand of the bracelet; an indexing means (5, 5, 6, 6) for adjusting the length of the bracelet, as well as a release means (7, 7) arranged such as to enable the mobile tip (4) to move from one indexed position to another. The second leaf (2) ends in two rectilinear rails (8, 8) along which the mobile tip (4) can slide. The indexing means (5, 5, 6, 6) is located on at least one of the rails (8, 8) of the second leaf (2) while the release means (7, 7) is arranged such as to move together with the mobile tip (4).

No. of Pages : 16 No. of Claims : 13

(12) PATENT APPLICATION PUBLICATION
(19) INDIA
(22) Date of filing of Application :08/06/2012
(21) Application No.5078/DELNP/2012 A
(43) Publication Date : 23/10/2015

(54) Title of the invention : NEUTRALIZING PROLACTIN RECEPTOR ANTIBODIES AND THEIR THERAPEUTIC USE

(51) International classification :C07K 16/28
(31) Priority Document No :09075546.3
(32) Priority Date :10/12/2009
(33) Name of priority country :EUROPEAN UNION
(86) International Application No :PCT/EP2010/067747
Filing Date :18/11/2010
(87) International Publication No :WO 2011/069799
(61) Patent of Addition to Application Number :NA
Filing Date :NA
(62) Divisional to Application Number :NA
Filing Date :NA

(71)**Name of Applicant :**
1)BAYER INTELLECTUAL PROPERTY GMBH
Address of Applicant :CREATIVE CAMPUS MONHEIM, BLDG. 4865, ALFRED-NOBEL-STR. 10, D-40789 MONHEIM, GERMANY Germany
(72)**Name of Inventor :**
1)CHRISTIANE OTTO
2)SIEGMUND WOLF
3)CHRISTOPH FREIBERG
4)AXEL HARRENGA
5)SIMONE GREVEN
6)MARK TRAUTWEIN
7)SANDRA BRUDER
8)ANDREA EICKER
9)ANDREAS WILMEN

(57) Abstract :
The present invention is directed to the neutralizing prolactin receptor antibody 005- C04, as well as maturated forms thereof, and antigen binding fragments, pharmaceutical compositions containing them and their use in the treatment or 5 prevention of benign disorders and indications mediated by the prolactin receptor such as endometriosis, adenomyosis, non-hormonal female contraception, . benign breast disease and mastalgia, lactation inhibition, benign prostate hyperplasia, fibroids, hyperand normoprolactinemic hair loss, and cotreatment in combined hormone therapy to inhibit mammary epithelial cell proliferation. The antibodies of the invention block 10 prolactin receptor-mediated signaling.

No. of Pages : 387 No. of Claims : 27

(12) PATENT APPLICATION PUBLICATION
(21) Application No.5235/DELNP/2012 A
(19) INDIA
(22) Date of filing of Application :13/06/2012
(43) Publication Date : 23/10/2015

(54) Title of the invention : ENCODING METHOD, DECODING METHOD, ENCODER APPARATUS, DECODER APPARATUS, PROGRAM AND RECORDING MEDIUM

(51) International classification :G10L 19/08
(31) Priority Document No :2010-002494
(32) Priority Date :08/01/2010
(33) Name of priority country :Japan
(86) International Application No :PCT/JP2011/050186
Filing Date :07/01/2011
(87) International Publication No :WO 2011/083849
(61) Patent of Addition to Application Number :NA
Filing Date :NA
(62) Divisional to Application Number :NA
Filing Date :NA

(71)**Name of Applicant :**
1)NIPPON TELEGRAPH AND TELEPHONE CORPORATION
Address of Applicant :3-1,OTEMACHI 2-CHOME, CHIYODA-KU, TOKYO 100-8116, JAPAN, Japan
(72)**Name of Inventor :**
1)MORIYA TAKEHIRO
2)HARADA NOBORU
3)KAMAMOTO YUTAKA

(57) Abstract :
In encoding, pitch periods for time series signals in a predetermined time interval are calculated, and a code corresponding thereto is output. In that encoding, the resolutions for expressing the pitch periods and/or a pitch period encoding mode are switched according to whether an index indicating a periodicity andlor stationarity level of the time series signals satisfies a condition indicating high or low in periodicity and/or stationarity. In that decoding, according to whether an index . indicating a periodicity and/or stationarity level, the index being included in or obtained fiom an input code corresponding to the predetermined time interval, satisfies a condition indicating high periodicity andor stationarity, a decoding mode for a code, included in the input code, corresponding to pitch periods is switched to decode the code corresponding to the pitch periods to obtain the pitch periods corresponding to the predetermined time interval.

No. of Pages : 128 No. of Claims : 32

(12) PATENT APPLICATION PUBLICATION
(21) Application No.3432/DELNP/2012 A
(19) INDIA
(22) Date of filing of Application :20/04/2012
(43) Publication Date : 23/10/2015

(54) Title of the invention : METHOD AND PRODUCT FOR BLOOD TREATMENT AND PURIFICATION

(51) International classification :A61M 1/34
(31) Priority Document No :0901341-8
(32) Priority Date :18/10/2009
(33) Name of priority country :Sweden
(86) International Application No :PCT/SE2010/051124
Filing Date :18/10/2010
(87) International Publication No :WO 2011/046504
(61) Patent of Addition to Application Number :NA
Filing Date :NA
(62) Divisional to Application Number :NA
Filing Date :NA

(71)**Name of Applicant :**
1)GLYCOREX AB
Address of Applicant :SOLVEGATAN 41 S-223 70 LUND, SWEDEN Sweden
(72)**Name of Inventor :**
1)NILSSON, KURT

(57) Abstract :
Extracorporeal blood treatment is performed daily on a large number of patients by use of for example a dialysis filter, plasma filter or a centrifuge. The purpose of the treatment is to separate minor components and molecules in a liquid or in the blood from larger ones, for example in connection with different disease conditions or with a view to extracting blood plasma, target substances such as blood components or molecules from for example blood donors. According to the present invention two separation steps are used together with a solution or a suspension containing at least one component, which specifically may bind to the component or the blood component to be specifically reduced, or to be refined/extracted during the treatment or during the blood treatment.

No. of Pages : 16 No. of Claims : 10

(12) PATENT APPLICATION PUBLICATION
(21) Application No.5095/DELNP/2012 A
(19) INDIA
(22) Date of filing of Application :08/06/2012
(43) Publication Date : 23/10/2015

(54) Title of the invention : AUTOMATIC FAUCET AND WATER DISCHARING DEVICE

(51) International classification :E03C 1/05
(31) Priority Document No :2009-281029
(32) Priority Date :10/12/2009
(33) Name of priority country :Japan
(86) International Application No :PCT/JP2010/072274
Filing Date :10/12/2010
(87) International Publication No :WO 2011/071158
(61) Patent of Addition to Application Number :NA
Filing Date :NA
(62) Divisional to Application Number :NA
Filing Date :NA

(71)**Name of Applicant :**
1)LIXIL CORPORATION
Address of Applicant :2-1-1 OJIMA, KOTO-KU, TOKYO 136-8535 (JP) Japan
(72)**Name of Inventor :**
1)ITAZU, NOBUAKI
2)YOSHITANI, RYOUSUKE

(57) Abstract :
An object of the present invention is to provide an automatic faucet that is easy for a,user to use, of which a sensor window can be easily cleaned, and of which a sensor is suppressed from falsely detecting water stream ejected from a water spout member. Provided is an automatic faucet, which has a water spout member 60 and a sensor 66 placed in a front end section of a water spout pipe 12 and automatically ejects water from the spout member 60 by the detection by the sensor 66. The water spout pipe 12 has a shape, in which a section of the front end side is directed forward I and obliquely downward with respect to a user. The water spout member 60 and the sensor 66 are axially inserted into the water spout pipe 12 from the obliquely downward opening 16 of the tip of the water spout pipe 12, and the sensor 66 is disposed above the water spout member 60. The water spout member 60 is disposed in a state where the front end face thereof is positioned to the inside of the water spout I pipe 12 than the front end face of the sensor 66.

No. of Pages : 158 No. of Claims : 23

(12) PATENT APPLICATION PUBLICATION
(21) Application No.5240/DELNP/2012 A
(19) INDIA
(22) Date of filing of Application :13/06/2012
(43) Publication Date : 23/10/2015

(54) Title of the invention : A HANG-OFF SYSTEM AND A HANG-OFF STRUCTURE.

(51) International classification :B63B 21/50
(31) Priority Document No :200901376
(32) Priority Date :23/12/2009
(33) Name of priority country :Denmark
(86) International Application No :PCT/DK2010/050324
Filing Date :26/11/2010
(87) International Publication No :WO 2011/076210
(61) Patent of Addition to Application Number :NA
Filing Date :NA
(62) Divisional to Application Number :NA
Filing Date :NA

(71)**Name of Applicant :**
1)NATIONAL OIL WELL VARCO DENMARK I/S
Address of Applicant :PRIORPARKEN 480, DK-2605 BR˜NDBY (DK) Denmark
(72)**Name of Inventor :**
1)CHRISTENSEN, CLAUS DENCKER

(57) Abstract :
The invention relates to a hang-off system for a offshore structure, e.g. for transporting hydrocarbons from a well at seabed to a vessel at sea surface. The hangoff system comprises a floating, moored weathervaning vessel with a turret with a hang-off structure. The hang-off system further comprises at least one flexible transporting unit hanging from the hang-off structure. The turret comprises a bearing and swivel system connected to or integrated with the hang-off structure. The bearing and swivel system comprises a centre axis, the flexible transporting unit hangs-off from a hang-off connecting point to a subsea connection point in a structural relation such that a vector extending from the subsea connecting point to the hang-off connection point has a vertical and a horizontal component, and the horizontal component is perpendicular to a hang-off vertical plane extending through the centre axis of the bearing and swivel system. The hang-off vertical plane separates the hangoff structure in a flexible transporting unit heading part and an opposite part. The flexible transporting unit heading part is horizontally closer to the subsea connection point than the opposite part, the hang-off connecting point is arranged in the opposite part of the hang-off structure. The hang-off system of the invention results in a reduced risk of subjecting the flexible transporting unit(s) to high wear, to bending with damaging curvature and/or to over stretching of the flexible transporting unit.

No. of Pages : 35 No. of Claims : 36

(12) PATENT APPLICATION PUBLICATION
(19) INDIA
(22) Date of filing of Application :18/04/2012
(21) Application No.3368/DELNP/2012 A
(43) Publication Date : 23/10/2015

(54) Title of the invention : POLYPEPTIDES AND USES THEEOF

(51) International classification :C07K 7/08
(31) Priority Document No :0916578.8
(32) Priority Date :22/09/2009
(33) Name of priority country :U.K.
(86) International Application No :PCT/GB2010/001781
Filing Date :22/09/2010
(87) International Publication No :WO 2011/036445
(61) Patent of Addition to Application Number :NA
Filing Date :NA
(62) Divisional to Application Number :NA
Filing Date :NA

(71)**Name of Applicant :**
1)XIMMUNE AB
Address of Applicant :C/O LUND UNIVERSITY BIOSCIENCE AB, SCHEELEVAGEN 15, S-223 70 LUND, SWEDEN Sweden
(72)**Name of Inventor :**
1)KALLE, MARTINA
2)MALMSTEN, NILS MARTIN
3)PAPAREDDY, PRAVEEN
4)RYDENGARD, VICTORIA
5)SCHMIDTCHEN, ARTUR
6)WALSE, BJORN ULRIK

(57) Abstract :
The present invention provides polypeptides comprising or consisting of an amino acid sequence derived from a naturally occurring protein which modulates blood coagulation, or a fragment, variant, fusion or derivative thereof, or a fusion of said fragment, variant or derivative thereof, for use in the treatment or prevention of inflammation and/or excessive coagulation of the blood. Related aspects of the invention provide isolated polypeptides comprising or consisting of an amino acid sequence of SEQ ID NOs: 1 to 11, or a fragment, variant, fusion or derivative thereof, or a fusion of said fragment, variant or derivative thereof, which exhibit an anti¬inflammatory and/or anti-coagulant activity, together with isolated nucleic acid molecules, vectors and host cells for making the same. Additionally provided are pharmaceutical compositions comprising a polypeptide of the invention, as well as methods of use of the same in the treatment and/or prevention of inflammation and/or excessive coagulation.

No. of Pages : 162 No. of Claims : 137

(12) PATENT APPLICATION PUBLICATION
(19) INDIA
(22) Date of filing of Application :18/04/2012
(21) Application No.3369/DELNP/2012 A
(43) Publication Date : 23/10/2015

(54) Title of the invention : LIGHTNING PROTECTION SYSTEM FOR A WIND TURBINE AND WIND TURBINE WITH A LIGHTNING PROTECTION SYSTEM

(51) International classification :F03D 11/00
(31) Priority Document No :09015262
(32) Priority Date :09/12/2009
(33) Name of priority country :EPO
(86) International Application No :PCT/EP2010/052681
Filing Date :03/03/2010
(87) International Publication No :WO 2011/069686
(61) Patent of Addition to Application Number :NA
Filing Date :NA
(62) Divisional to Application Number :NA
Filing Date :NA

(71)**Name of Applicant :**
1)SIEMENS AKTIENGESELLSCHAFT
Address of Applicant :WITTELSBACHERPLATZ 2 80333, MUNCHEN, GERMANY Germany
(72)**Name of Inventor :**
1)LEWKE BASTIAN

(57) Abstract :
A lightning protection system (13) for a wind turbine (1) having an electrically grounded structure part (2), a main shaft (4) electrically and mechanically connected therewith, a blade hub (8) rotatively connected via a main bearing (6) to the main shaft (4) and blades (12) connected to the blade hub (8), comprises a down-conductor (14) attachable inside a blade (12), a high voltage conductor (15) for guiding lightning current, wherein a first end (15a) of the high voltage conductor (15) is in electrical communication with the down-conductor (14). It further comprises a high voltage contact (22) attachable inside the main shaft (4), wherein a second end (15b) of the high voltage conductor (15) is in electrical communication with the high voltage contact (22) and wherein a lightning current is guided from the down-conductor (14) via the high voltage conductor (15) to the high voltage contact (22).

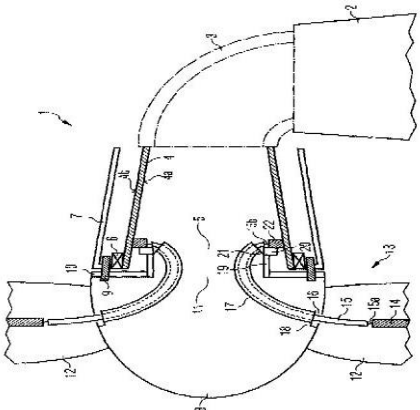

FIG 1

No. of Pages : 21 No. of Claims : 13

(12) PATENT APPLICATION PUBLICATION
(19) INDIA
(22) Date of filing of Application :13/06/2012
(21) Application No.5230/DELNP/2012 A
(43) Publication Date : 23/10/2015

(54) Title of the invention : SELF-INJECTION DEVICE

(51) International classification :A61M 5/20
(31) Priority Document No :NA
(32) Priority Date :NA
(33) Name of priority country :NA
(86) International Application No :PCT/US2009/006574
Filing Date :16/12/2009
(87) International Publication No :WO 2011/075102
(61) Patent of Addition to Application Number :NA
Filing Date :NA
(62) Divisional to Application Number :NA
Filing Date :NA

(71)**Name of Applicant :**
1)BECTON, DICKINSON AND COMPANY
Address of Applicant :1 BECTON DRIVE FRANKLIN LAKES NEW JERSEY 07417-1880 UNITED STATES OF AMERICA U.S.A.
(72)**Name of Inventor :**
1)SONDEREGGER, RALPH
2)BINGHAM, CURT
3)VEDRINE, LIONEL

(57) Abstract :
A drug delivery device, including a body having a reservoir disposed therein for containing a medicament, the reservoir including a flexible wall; a plunger movable within the body for causing the medicament to be expelled from the reservoir, the plunger having a contact surface that is not affixed to said flexible reservoir wall; a spring biasing the plunger toward the reservoir; and means for selectively maintaining the plunger in a pre-activated position with respect to the reservoir and, upon releasing the plunger from the pre-activated position, for guiding the plunger to move under the force of the spring such that the contact surface of the plunger contacts the flexible reservoir wall to pressurize the reservoir for delivery of the medicament to a patient.

No. of Pages : 66 No. of Claims : 22

(12) PATENT APPLICATION PUBLICATION
(19) INDIA
(22) Date of filing of Application :13/06/2012
(21) Application No.5233/DELNP/2012 A
(43) Publication Date : 23/10/2015

(54) Title of the invention : FUNGICIDAL HETEROCYCLIC COMPOUNDS

(51) International classification :A01N 43/78
(31) Priority Document No :61/293,095
(32) Priority Date :07/01/2010
(33) Name of priority country :U.S.A.
(86) International Application No :PCT/US2011/020473
Filing Date :07/01/2011
(87) International Publication No :WO 2011/085170
(61) Patent of Addition to Application Number :NA
Filing Date :NA
(62) Divisional to Application Number :NA
Filing Date :NA

(71)**Name of Applicant :**
1)E.I. DU PONT DE NEMOURS AND COMPANY
Address of Applicant :1007 MARKET STREET, WILMINGTON, DE 19898, USA. U.S.A.
(72)**Name of Inventor :**
1)LIEPA ANDRIS JURIS
2)PASTERIS ROBERT JAMES
3)STEVENSON THOMAS MARTIN

(57) Abstract :
Disclosed are compounds of Formula 1 and Formula 1A including all stereoisomers, N oxides, and salts thereof, (formula I and 1A) wherein E, Y1, Y2, Y3, G, J, XI and X2 are as defined in the disclosure. Also disclosed are compositions containing the compounds of Formula 1 or Formula 1A and methods for controlling plant disease caused by a fungal pathogen comprising applying an effective amount of a compound or a composition of the invention.

No. of Pages : 183 No. of Claims : 10

(12) PATENT APPLICATION PUBLICATION
(19) INDIA
(22) Date of filing of Application :11/06/2012
(21) Application No.5162/DELNP/2012 A
(43) Publication Date : 23/10/2015

(54) Title of the invention : PLANT MEMBRANE BOUND O-ACYL TRANSFERASE (MBOAT) FAMILY PROTEIN SEQUENCES AND THEIR USES FOR ALTERING FATTY ACID COMPOSITIONS

(51) International classification :C12N 9/10
(31) Priority Document No :61/290,172
(32) Priority Date :24/12/2009
(33) Name of priority country :U.S.A.
(86) International Application No :PCT/US2010/060654
Filing Date :16/12/2010
(87) International Publication No :WO 2011/079005
(61) Patent of Addition to Application Number :NA
Filing Date :NA
(62) Divisional to Application Number :NA
Filing Date :NA

(71)**Name of Applicant :**
1)E. I. DU PONT DE NEMOURS AND COMPANY
Address of Applicant :1007 MARKET STREET, WILMINGTON, DELAWARE 19898, U.S.A. U.S.A.
(72)**Name of Inventor :**
1)DAMUDE, HOWARD GLENN
2)MEYER, KNUT
3)YADAV, NARENDRA, S.

(57) Abstract :
This invention is in the field of biotechnology, in particular, this pertains to polynucleotide sequences encoding membrane bound 0-acyltransferase genes and the use of these acyltransferases for altering fatty acid profiles in oilseed plants. Methods for increasing elongation and desaturation conversion efficiencies are also disclosed.

No. of Pages : 724 No. of Claims : 23

(12) PATENT APPLICATION PUBLICATION
(21) Application No.5163/DELNP/2012 A
(19) INDIA
(22) Date of filing of Application :11/06/2012
(43) Publication Date : 23/10/2015

(54) Title of the invention : A NOVEL VACCINE THAT TARGETS TUMOR VESSELS AS AN EFFICIENT TOOL IN TUMOR THERAPY

(51) International classification :A61K 39/385
(31) Priority Document No :0901565-2
(32) Priority Date :15/12/2009
(33) Name of priority country :Sweden
(86) International Application No :PCT/SE2010/000300
Filing Date :15/12/2010
(87) International Publication No :WO 2011/075035
(61) Patent of Addition to Application Number :NA
Filing Date :NA
(62) Divisional to Application Number :NA
Filing Date :NA

(71)**Name of Applicant :**
1)THERAVAC PHARMACEUTICALS AB
Address of Applicant :VARDKASVAGEN 1, S-756 55 UPPSALA (SE) Sweden
(72)**Name of Inventor :**
1)OLSSON, ANNA-KARIN
2)HELLMAN, LARS

(57) Abstract :
The invention relates to a composition for the treatment of various cancers. The composition is a vaccine containing sequences of EDB, EDA, annexin Al, endosialin, C domain of tenascin C or magic roundabout (MR) or fragments thereof as single or in a combination coupled to one or several heterologous foreign carrier molecules. The vaccine will produce antibodies that are directed against self proteins which are preferentially expressed in and around tumor vessels. The vaccine is preferably administrated together with an adjuvant.

No. of Pages : 18 No. of Claims : 4

(12) PATENT APPLICATION PUBLICATION
(21) Application No.5164/DELNP/2012 A
(19) INDIA
(22) Date of filing of Application :11/06/2012
(43) Publication Date : 23/10/2015

(54) Title of the invention : METHOD FOR INCREASING THE STRENGTH AND SOLVENT RESISTANCE OF POLYIMIDE NANOWEBS

(51) International classification :D04H 1/42
(31) Priority Document No :61/286,623
(32) Priority Date :15/12/2009
(33) Name of priority country :U.S.A.
(86) International Application No :PCT/US2010/060228
Filing Date :14/12/2010
(87) International Publication No :WO 2011/081914
(61) Patent of Addition to Application Number :NA
Filing Date :NA
(62) Divisional to Application Number :NA
Filing Date :NA

(71)**Name of Applicant :**
1)E. I. DU PONT DE NEMOURS AND COMPANY
Address of Applicant :1007 MARKET STREET, WILMINGTON, DELAWARE 19898, U.S.A. U.S.A.
(72)**Name of Inventor :**
1)ARORA, PANKAJ
2)BAZZANA, STEPHANE FRANCOIS
3)DENNES, T., JOSEPH
4)HOLOWKA, ERIC, P.
5)KRISHNAMURTHY, LAKSHMI
6)MAZUR, STEPHEN
7)SIMMONDS, GLEN, EDWARD

(57) Abstract :
The invention provides a method for enhancing the properties of polyimide nanowebs, the method comprising subjecting a nanoweb consisting essentially of a plurality of nanofibers of an aromatic polyimide to a temperature at least 50°C higher than the imidization temperature thereof for a period of time in the range of 5 seconds to 20 minutes, thereby preparing an enhanced nanoweb. Also provided is a multi-layer article comprising the enhanced nanoweb, and an electrochemical cell comprising the multilayer article.

No. of Pages : 60 No. of Claims : 14

(12) PATENT APPLICATION PUBLICATION
(19) INDIA
(22) Date of filing of Application :11/06/2012
(21) Application No.5165/DELNP/2012 A
(43) Publication Date : 23/10/2015

(54) Title of the invention : RAZOR CARTRIDGE WITH NON-CUTTING ELEMENT

(51) International classification :B26B 21/40
(31) Priority Document No :61/287,722
(32) Priority Date :18/12/2009
(33) Name of priority country :U.S.A.
(86) International Application No :PCT/US2010/060420
Filing Date :15/12/2010
(87) International Publication No :WO 2011/075505
(61) Patent of Addition to Application Number :NA
Filing Date :NA
(62) Divisional to Application Number :NA
Filing Date :NA

(71)**Name of Applicant :**
1)THE GILLETTE COMPANY
Address of Applicant :WORLD SHAVING HEADQUARTERS, IP/LEGAL PATENT DEPARTMENT - 3E, ONE GILLETTE PARK, BOSTON, MASSACHUSETTS 02127, U.S.A. U.S.A.
(72)**Name of Inventor :**
1)CLARKE, SEAN PETER
2)PATEL, ASHOK BAKUL
3)STONE, MATTHEW ROBERT

(57) Abstract :
A novel razor cartridge includes at least one non-cutting element disposed anywhere within a blade array between a guard and a cap andlor in a blade position of a frame providing skinhair management. This non-cutting element allows the fine-tuning of parameters such as blade-skin contact, hair orientation, blade spans and rinse-through gaps in manners that improve shaving comfort, closeness, efficiency, and/or rinse-ability. The non-cutting element may include projections, fin-like elements, comb-like features I 0 having teeth, exfoliation or lubricating capabilities. By having a fixed non-cutting element disposed midway in a blade array, a multi-stage cartridge is provided with a middle control point with potentially different functionality before and after the noncutting element. The non-cutting element is not attached to another blade in the blade I array though it may be manufactured as a modified blade support, attached to a blade support, or as part of the frame or the clips.

No. of Pages : 72 No. of Claims : 18

(12) PATENT APPLICATION PUBLICATION
(21) Application No.6178/DELNP/2014 A
(19) INDIA
(22) Date of filing of Application :23/07/2014
(43) Publication Date : 23/10/2015

(54) Title of the invention : A CONTAINER AND BLANK

(51) International classification :B65D5/24
(31) Priority Document No :1122495.3
(32) Priority Date :29/12/2011
(33) Name of priority country :U.K.
(86) International Application No :PCT/GB2012/000928
Filing Date :31/12/2012
(87) International Publication No :WO 2013/098544
(61) Patent of Addition to Application Number :NA
Filing Date :NA
(62) Divisional to Application Number :NA
Filing Date :NA

(71)**Name of Applicant :**
1)COLPAC LIMITED
Address of Applicant :Enterprise Way Maulden Road Flitwick Bedfordshire MK45 5BW U.K.
(72)**Name of Inventor :**
1)MOORE Samantha

(57) Abstract :
The invention relates to a container. In particular the invention relates to a container (152) for receiving a food product which container (152) is formed from a folded blank (102). The body of the container (152) is formed from panels (104 106 108 110) of the container blank (102) and at least one flange section is provided at an edge of an opening of the container body. The flange section comprises two overlapping flange panels (122 124) of the container blank (102) which are bonded together to maintain the shape of the container body.

No. of Pages : 31 No. of Claims : 21

(12) PATENT APPLICATION PUBLICATION
(19) INDIA
(22) Date of filing of Application :12/06/2012
(21) Application No.5167/DELNP/2012 A
(43) Publication Date : 23/10/2015

(54) Title of the invention : METHOD AND SYSTEM FOR PARTITIONING PARALLEL SIMULATION MODELS

(51) International classification :G06G 7/48
(31) Priority Document No :61/304,056
(32) Priority Date :12/02/2010
(33) Name of priority country :U.S.A.
(86) International Application No :PCT/US2010/053141
Filing Date :19/10/2010
(87) International Publication No :WO 2011/100002
(61) Patent of Addition to Application Number :NA
Filing Date :NA
(62) Divisional to Application Number :NA
Filing Date :NA

(71)**Name of Applicant :**
1)EXXONMOBIL UPSTREAM RESEARCH COMPANY
Address of Applicant :P.O. BOX 2189, CORP-URC-SW342, HOUSTON, TEXAS 77252-2189, UNITED STATES OF AMERICA U.S.A.
(72)**Name of Inventor :**
1)SERGUEI MALIASSOV
2)ROBERT R. SHUTTLEWORTH

(57) Abstract :
A method is presented for partitioning a simulation model into a plurality of subdomains that may each be assigned to one of a plurality of processors. The method includes creating a representation of a topology graph of a simulation model in a tangible, computer readable medium. The topology p p h includes a plurality of I I computational elements and a plurality of connections 1 between those elements. Each of the p l d t y of connec- I tions is weighted to create a plurality of weights, and I each of the plwlity of weights is scaled. Optionally, the 1 - weights can be mapped to diffmt interval of values. Based on the weights information the topology graph is 1 - -- partitioned into two or more subdomains, wherein a partition boundary follows a local topographical minimum in the topology graph. A subdomain is assigned ta each of the plurality of processors.

No. of Pages : 38 No. of Claims : 20

(12) PATENT APPLICATION PUBLICATION
(19) INDIA
(22) Date of filing of Application :12/06/2012
(21) Application No.5168/DELNP/2012 A
(43) Publication Date : 23/10/2015

(54) Title of the invention : ROTOR DISK

(51) International classification :B01F 7/00
(31) Priority Document No :A 44/2010
(32) Priority Date :14/01/2010
(33) Name of priority country :Austria
(86) International Application No :PCT/AT2011/000003
Filing Date :07/01/2011
(87) International Publication No :WO 2011/085417
(61) Patent of Addition to Application Number :NA
Filing Date :NA
(62) Divisional to Application Number :NA
Filing Date :NA

(71)**Name of Applicant :**
1)EREMA ENGINEERING RECYCLING MASCHINEN UND ANLAGEN GESELLSCHAFT M.B.H.
Address of Applicant :FREINDORF, UNTERFELDSTRASSE 3, A-4052 ANSFELDEN, AUSTRIA Austria
(72)**Name of Inventor :**
1)MANFRED HACKL
2)KLAUS FEICHTINGER
3)GERHARD WENDELIN

(57) Abstract :
The invention at hand relates to a rotor disk (1) to be inserted into a receptacle (2) for the treatment of polymers, having a disk body (3) on whose top side (4) mixing and/or comminuting tools (5) are providable and on whose opposite underside (6) a number of conveying ribs (7) extending from the interior to the exterior are provided with which during operation polymer particles are transportable towards the exterior or, respectively, that during operation exert a force directed from the center (8) of the rotor disk (1) towards the exterior on the polymer particles grasped by the conveying ribs (7). In accordance with the invention it is provided that the conveying ribs (7) are curved concavely in the direction of rotation or, respectively, of movement. (Figure 1)

No. of Pages : 21 No. of Claims : 19

(12) PATENT APPLICATION PUBLICATION
(19) INDIA
(22) Date of filing of Application :12/06/2012
(21) Application No.5169/DELNP/2012 A
(43) Publication Date : 23/10/2015

(54) Title of the invention : COMPOSITIONS AND METHODS FOR INCREASING SERUM HALF-LIFE OF FC FUSION PROTEINS

(51) International classification :C07K 19/00
(31) Priority Document No :61/266,095
(32) Priority Date :02/12/2009
(33) Name of priority country :U.S.A.
(86) International Application No :PCT/US2010/058765
Filing Date :02/12/2010
(87) International Publication No :WO 2011/068993
(61) Patent of Addition to Application Number :NA
Filing Date :NA
(62) Divisional to Application Number :NA
Filing Date :NA

(71)**Name of Applicant :**
1)ACCELERON PHARMA INC.
Address of Applicant :128 SIDNEY STREET, CAMBRIDGE, MA 02139, USA U.S.A.
(72)**Name of Inventor :**
1)JASBIR SEEHRA
2)JOHN KNOPF
3)RAVINDRA KUMAR

(57) Abstract :
Provided herein are glycovariant Fc fusion proteins having increased serum half lives. Also provided are methods for increasing the serum half life of an Fc fusion protein by introducing one or more non-endogenous glycosylation sites.

No. of Pages : 99 No. of Claims : 62

(12) PATENT APPLICATION PUBLICATION
(19) INDIA
(22) Date of filing of Application :23/07/2014
(21) Application No.6180/DELNP/2014 A
(43) Publication Date : 23/10/2015

(54) Title of the invention : ELECTRICALLY ASSISTED TURBOCHARGER

(51) International classification :F02B39/10,F02B39/00,F01D25/24
(31) Priority Document No :61/583918
(32) Priority Date :06/01/2012
(33) Name of priority country :U.S.A.
(86) International Application No :PCT/US2012/071160
Filing Date :21/12/2012
(87) International Publication No :WO 2013/103546
(61) Patent of Addition to Application Number :NA
Filing Date :NA
(62) Divisional to Application Number :NA
Filing Date :NA

(71)**Name of Applicant :**
1)BORGWARNER INC.
Address of Applicant :Patent Department 3850 Hamlin Road Auburn Hills Michigan 48326 U.S.A.
(72)**Name of Inventor :**
1)DIEMER Paul
2)CAVAGNARO Augustine
3)BUCKING Michael

(57) Abstract :
An electrically assisted turbocharger (1) comprising a housing (3) and an electric motor stator (22) disposed in the housing (3). The stator (22) includes a pair of o rings or other circumferential seals (204 208) disposed therearound. The o rings (204 208) are operative to seal against an interior of the housing (3) to form an annular chamber (130) around at least a portion of the stator (22) and a pair of end cavities (122 126) at the axial ends of the stator (22). The annular chamber (130) is adapted to allow the circulation of a cooling fluid around the stator (22). A pair of bearings (10 12) may be disposed in the housing (3) one on each side of the stator (22). A shaft (7) is supported in the housing (3) by the bearings (10 12). The shaft (7) in tum supports a turbine wheel (5) and a compressor wheel. An electric motor rotor (24) is disposed on the shaft (7) between the bearings (10 12) and inside the stator (22).

No. of Pages : 15 No. of Claims : 15

(12) PATENT APPLICATION PUBLICATION
(19) INDIA
(22) Date of filing of Application :23/07/2014
(21) Application No.6181/DELNP/2014 A
(43) Publication Date : 23/10/2015

(54) Title of the invention : EXHAUST GAS TURBOCHARGER FOR USE WITH AN INTERNAL COMBUSTION ENGINE

(51) International classification	:F02B37/00,F02B37/22,F02B39/00
(31) Priority Document No	:102012203624.5
(32) Priority Date	:07/03/2012
(33) Name of priority country	:Germany
(86) International Application No	:PCT/US2013/027208
Filing Date	:22/02/2013
(87) International Publication No	:WO 2013/133986
(61) Patent of Addition to Application Number	:NA
Filing Date	:NA
(62) Divisional to Application Number	:NA
Filing Date	:NA

(71)**Name of Applicant :**
1)BORGWARNER INC.
Address of Applicant :Patent Department 3850 Hamlin Road Auburn Hills MI 48326 U.S.A.
(72)**Name of Inventor :**
1)CHRISTMANN Ralf
2)VORLAEUFER Sebastian

(57) Abstract :
The present invention relates to an exhaust gas turbocharger for use in an internal combustion engine and to a method for assembling and/or setting an exhaust gas turbocharger. According to the invention the exhaust gas turbocharger comprises a regulating mechanism and an actuator device for actuating the regulating mechanism wherein the actuator device comprises a control rod with a first part and a second part. The second part of the control rod has a guide which is designed in such a way that it at least partially surrounds the first part. Moreover the second part has at least one hole wherein the first part is connected to the second part by a welded or assembly joint which is arranged in the at least one hole.

No. of Pages : 27 No. of Claims : 16

(12) PATENT APPLICATION PUBLICATION
(21) Application No.5154/DELNP/2012 A
(19) INDIA
(22) Date of filing of Application :11/06/2012
(43) Publication Date : 23/10/2015

(54) Title of the invention : SWITCH SYSTEM AND METHOD FOR THE MONITORING OF VIRTUAL OPTICAL PATHS IN AN OPTICAL BURST SWITCHED (OBS) COMMUNICATION NETWORK

(51) International classification :H04J 14/02
(31) Priority Document No :09175742.7
(32) Priority Date :12/11/2009
(33) Name of priority country :EUROPEAN UNION
(86) International Application No :PCT/EP2010/067377
Filing Date :12/11/2010
(87) International Publication No :WO 2011/058135
(61) Patent of Addition to Application Number :NA
Filing Date :NA
(62) Divisional to Application Number :NA
Filing Date :NA

(71)**Name of Applicant :**
1)INTUNE NETWORKS LIMITED
Address of Applicant :9B BECKETT WAY, PARKWEST BUSINESS PARK, DUBLIN 12, IRELAND Ireland
(72)**Name of Inventor :**
1)DAVID MCDONALD
2)TOM FARRELL
3)JIM SHIELDS
4)JOHN COURTNEY

(57) Abstract :
The invention provides an optical burst switch in an Optical Burst Switched (OBS) communication network, said optical burst switch comprising means for monitoring and 5 maintaining mesh of virtual optical paths from a communication node to a plurality of other communication nodes, arranged in a ring network, enabling traffic data to be transmitted and/or received between nodes via a physical optical path. The switch also provides means for sending a 10 data packet probe on a virtual path from a node to each other node in the OBS communication network, wherein data packet probe information received at said switch provides information of availability of the physical optical path for sending traffic data between nodes. The switch can be 15 configured such that the rate at which this path monitoring is scheduled guaranteeing less than 50ms protection switch in the event of monitoring a failed or degraded path.

No. of Pages : 29 No. of Claims : 15

(12) PATENT APPLICATION PUBLICATION
(19) INDIA
(22) Date of filing of Application :23/07/2014
(21) Application No.6184/DELNP/2014 A
(43) Publication Date : 23/10/2015

(54) Title of the invention : EXHAUST GAS TURBOCHARGER

(51) International classification :F02B39/00,F01D25/16,F01D25/00
(31) Priority Document No :102012004114.4
(32) Priority Date :01/03/2012
(33) Name of priority country :Germany
(86) International Application No :PCT/US2013/027056
Filing Date :21/02/2013
(87) International Publication No :WO 2013/130329
(61) Patent of Addition to Application Number :NA
Filing Date :NA
(62) Divisional to Application Number :NA
Filing Date :NA

(71)**Name of Applicant :**
1)BORGWARNER INC.
Address of Applicant :Patent Department 3850 Hamlin Road Auburn Hills MI 48326 U.S.A.
(72)**Name of Inventor :**
1)LOEWENBERG Michael

(57) Abstract :
The invention relates to an exhaust gas turbocharger (1) having a shaft (2) which has a first centric bore (4) on an end face (3) having a turbine wheel (5) which has a second centric bore (7) in the wheel rear side (6) thereof having a connection piece (8) which engages into the first and second bores (4 7); and having an integral connection device (9) for connecting the shaft (2) to the turbine wheel (5) wherein the connection piece (8) is hollow in form.

No. of Pages : 9 No. of Claims : 10

(12) PATENT APPLICATION PUBLICATION
(19) INDIA
(22) Date of filing of Application :23/07/2014
(21) Application No.6185/DELNP/2014 A
(43) Publication Date : 23/10/2015

(54) Title of the invention : EXHAUST GAS TURBOCHARGER

(51) International classification :F02B37/12,F02B37/22,F02B37/24
(31) Priority Document No :102012008466.8
(32) Priority Date :27/04/2012
(33) Name of priority country :Germany
(86) International Application No :PCT/US2013/037325
Filing Date :19/04/2013
(87) International Publication No :WO 2013/163023
(61) Patent of Addition to Application Number :NA
Filing Date :NA
(62) Divisional to Application Number :NA
Filing Date :NA

(71)**Name of Applicant :**
1)BORGWARNER INC.
Address of Applicant :Patent Department 3850 Hamlin Road Auburn Hills MI 48326 U.S.A.
(72)**Name of Inventor :**
1)RADKE Urban
2)OSMANOVIC Nermin

(57) Abstract :
The invention relates to an exhaust gas turbocharger (1) having a turbine (2) which has a turbine wheel (3) surrounded by an intake duct (4) and having a VTG cartridge (5) which has a washer (6) and a vane bearing ring (7) which delimit the intake duct (4) and which has a plurality of vanes (8) which are arranged in the intake duct (4) and are mounted in the vane bearing ring (7) by way of rotatable vane shafts (9) which are connected to vane levers (10) the lever heads (11) of which engage into associated grooves (12) in a unison ring (13) which surrounds the vane bearing ring (7) on the outside and which has a radial bearing between the vane bearing ring (7) and the unison ring (13) wherein the radial bearing has at least one pin (14) which is fixed on the vane bearing ring (7) and onto which a rolling roller (15) is placed against which an inner wall region (16) of the unison ring (13) bears.

No. of Pages : 11 No. of Claims : 10

(12) PATENT APPLICATION PUBLICATION
(19) INDIA
(22) Date of filing of Application :23/07/2014
(21) Application No.6186/DELNP/2014 A
(43) Publication Date : 23/10/2015

(54) Title of the invention : EXHAUST GAS TURBOCHARGER

(51) International classification	:F02B37/12,F02B37/22,F02B37/24
(31) Priority Document No	:102012008590.7
(32) Priority Date	:27/04/2012
(33) Name of priority country	:Germany
(86) International Application No	:PCT/US2013/037307
Filing Date	:19/04/2013
(87) International Publication No	:WO 2013/163018
(61) Patent of Addition to Application Number	:NA
Filing Date	:NA
(62) Divisional to Application Number	:NA
Filing Date	:NA

(71)**Name of Applicant :**
1)BORGWARNER INC.
Address of Applicant :Patent Department 3850 Hamlin Road Auburn Hills MI 48326 U.S.A.
(72)**Name of Inventor :**
1)METZ Dietmar
2)MUELLER Martin
3)RAMB Thomas

(57) Abstract :
The invention relates to an exhaust gas turbocharger (1) having a turbine (2) which has a turbine wheel (3) surrounded by an intake duct (4) and having a VTG cartridge (5) which has a disk (6) and a vane bearing ring (7) which delimit the intake duct which has a plurality of vanes which are arranged in the intake duct (4) and mounted in the vane bearing ring (7) by way of rotatable vane shafts (9) which are connected to vane levers (10) the lever heads (11) of which engage into associated grooves (12) in a unison ring (13) which surrounds the vane bearing ring (7) on the outside and having a radial bearing between the unison ring (13) and the vane bearing ring (7) wherein the radial bearing has at least one roller element (8) which has a first supporting region (8A) which is inserted into a depression (14) in the vane bearing ring (7) which is arranged circumferentially and is open to the outer circumference (U) and which has a second supporting region (8B) which engages into a bearing groove (15) which is arranged opposite the depression (14) is provided in the unison ring (13) and is open on one side in the direction toward the depression (14).

No. of Pages : 12 No. of Claims : 10

(12) PATENT APPLICATION PUBLICATION
(21) Application No.5137/DELNP/2012 A
(19) INDIA
(22) Date of filing of Application :11/06/2012
(43) Publication Date : 23/10/2015

(54) Title of the invention : ELECTROLYSIS WATER MAKING APPARATUS

(51) International classification :C02F 1/46
(31) Priority Document No :2009-296082
(32) Priority Date :25/12/2009
(33) Name of priority country :Japan
(86) International Application No :PCT/JP2010/070678
Filing Date :19/11/2010
(87) International Publication No :WO 2011/077875
(61) Patent of Addition to Application Number :NA
Filing Date :NA
(62) Divisional to Application Number :NA
Filing Date :NA

(71)**Name of Applicant :**
1)MORINAGA MILK INDUSTRY CO., LTD.
Address of Applicant :33-1, SHIBA 5-CHOME, MINATO-KU, TOKYO 108-8384, JAPAN Japan
(72)**Name of Inventor :**
1)MATSUYAMA, KOKI

(57) Abstract :
THE INVENTION RELATES TO AN ELECTROLYSIS WATER-MAKING APPARATUS WHERE AN ELECTROLYTIC CELL IN WHICH A UNIT CELL IS PROVIDED IN A CASING, IS FIXED TO AN INSTALLATION BASE BY A FIXTURE ATTACHED TO THE ELECTROLYTIC CELL, AND, THROUGH A PIPE GROUP, ELECTROLYTE SOLUTION 5 IS SUPPLIED INTO THE ELECTROLYTIC CELL, AND ELECTROLYZED PRODUCTS PRODUCED IN THE ELECTROLYTIC CELL ARE DELIVERED. THE ELECTROLYSIS WATER-MAKING APPARATUS IS CHARACTERIZED IN THAT: IN THE INSTALLATION BASE, THERE ARE FORMED ONE OR TWO OR MORE THROUGH HOLES, DEPENDING ON THE SIZE OF THE ELECTROLYTIC CELL, THROUGH WHICH THROUGH HOLE THE END PART OF THE FIXTURE CAN BE INSERTED; AN END PART OF THE FIXTURE IS INSERTED THROUGH A THROUGH HOLE, WHICH IS SELECTED 10 FROM THE ONE OR TWO OR MORE THROUGH HOLES DEPENDING ON THE SIZE OF THE ELECTROLYTIC CELL; AND AN END PART OF THE FIXTURE WHICH PROJECTS FROM THE INSTALLATION BASE IS LOCKED ON THE INSTALLATION BASE. THE ELECTROLYSIS WATER-MAKING APPARATUS CAN BE EASILY PRODUCED IN A SHORT TIME, AND CAN BE PROVIDED AT A LOW PRICE.

No. of Pages : 47 No. of Claims : 4

(12) PATENT APPLICATION PUBLICATION
(19) INDIA
(22) Date of filing of Application :11/06/2012
(21) Application No.5138/DELNP/2012 A
(43) Publication Date : 23/10/2015

(54) Title of the invention : RADIATION ELEMENT RETAINER DEVICE

(51) International classification :H01Q 1/22
(31) Priority Document No :NA
(32) Priority Date :NA
(33) Name of priority country :NA
(86) International Application No :PCT/SE2009/051487
Filing Date :22/12/2009
(87) International Publication No :WO 2011/078753
(61) Patent of Addition to Application Number :NA
Filing Date :NA
(62) Divisional to Application Number :NA
Filing Date :NA

(71)**Name of Applicant :**
1)SAAB AB
Address of Applicant :S-581 88 LINKOPING, SWEDEN Sweden
(72)**Name of Inventor :**
1)GEBRETNSAE, MUSSIE

(57) Abstract :
The radiation element retainer device according to the invention comprises attachment means for attaching a radiation element to the radiation element r device. An attachment means attaches one radiation element to the on elenient retainer device. The radiation element retainer device is red to be arranged with a circuit board carrier, such that the radiation is electrically connectable to a circuit board, arranged at the circuit er, as the radiation element is fxed on the radiation element retainer e attachment elements. The invention in characterised in, that the ement retainer device further comprises a main board and a of sets of attachment elements and said attachment elements are rrned with the retainer device, such that the attachment elements and the main board consists of one single piece of material which forms the r+ ra4ation element retainer device.

No. of Pages : 22 No. of Claims : 15

(12) PATENT APPLICATION PUBLICATION
(19) INDIA
(22) Date of filing of Application :11/06/2012
(21) Application No.5139/DELNP/2012 A
(43) Publication Date : 23/10/2015

(54) Title of the invention : HIGHLY-CONDUCTIVE AND TEXTURED FRONT TRANSPARENT ELELCTRODE FOR A-SI THIN-FILM SOLAR CELLS, AND/OR METHOD OF MAKING THE SAME

(51) International classification :H01L 31/18
(31) Priority Document No :12/656,284
(32) Priority Date :22/01/2010
(33) Name of priority country :U.S.A.
(86) International Application No :PCT/US2010/003258
Filing Date :28/12/2010
(87) International Publication No :WO 2011/090468
(61) Patent of Addition to Application Number :NA
Filing Date :NA
(62) Divisional to Application Number :NA
Filing Date :NA

(71)**Name of Applicant :**
1)GUARDIAN INDUSTRIES CORP.
Address of Applicant :2300 HARMON ROAD, AUBURN HILLS, MI 48326-1714, UNITED STATES OF AMERICA U.S.A.
(72)**Name of Inventor :**
1)KRASNOV, ALEXEY
2)DEN BOER, WILLEM

(57) Abstract :
Certain example embodiments incorporate a hybrid design for the front electrode of solar cells, which advantageously combines naturally textured pyrblytic tin oxide and highly-conductive sputtered indium tin oxide (ITO). In certain example embodiments of this invention, a method of making a front ele6bode superstrate for a solar cell is provided. A glass substrate is provided. A lay& of tin oxide is pyrolytically deposited on the glass substrate, with the layer of tin oxide being textured as a result of the pyrolytic deposition and with the layer of tin oxide being haze producing. A layer of indium tin oxide (ITO) is spytter-deposited on the layer of tin oxide, with the layer of IT0 being generally co$ormal with respect to the layer of tin oxide. An amorphous silicon (a-Si) thin f-layer stack is formed on the layer of IT0 in making the front electrode 2 suserstrate.

No. of Pages : 22 No. of Claims : 20

(12) PATENT APPLICATION PUBLICATION
(19) INDIA
(22) Date of filing of Application :23/07/2014
(21) Application No.6190/DELNP/2014 A
(43) Publication Date : 23/10/2015

(54) Title of the invention : LIQUID DELIVERY TANK WITH EXPANSION CHAMBER

(51) International classification :A47J31/32,A47J31/36
(31) Priority Document No :13/370005
(32) Priority Date :09/02/2012
(33) Name of priority country :U.S.A.
(86) International Application No :PCT/US2013/024590
Filing Date :04/02/2013
(87) International Publication No :WO 2013/119493
(61) Patent of Addition to Application Number :NA
Filing Date :NA
(62) Divisional to Application Number :NA
Filing Date :NA

(71)**Name of Applicant :**
1)KEURIG GREEN MOUNTAIN INC.
Address of Applicant :33 Coffee Lane Waterbury Vermont 05676 8900 U.S.A.
(72)**Name of Inventor :**
1)COMINELLI Tom
2)SHEPARD James E.
3)VITELLA Thomas

(57) Abstract :
A beverage forming method and system employing the introduction of air into the heater tank and/or an expansion chamber after liquid delivery is complete. An expansion chamber may be provided at the top of the heater tank and provide a tortuous flow path from an air inlet to the tank outlet.

No. of Pages : 25 No. of Claims : 26

(12) PATENT APPLICATION PUBLICATION
(19) INDIA
(22) Date of filing of Application :12/06/2012
(21) Application No.5183/DELNP/2012 A
(43) Publication Date : 23/10/2015

(54) Title of the invention : MAGNETIC COUPLING FOR FAUCET HANDLE

(51) International classification :H16K 31/60
(31) Priority Document No :12/651,818
(32) Priority Date :04/01/2010
(33) Name of priority country :U.S.A.
(86) International Application No :PCT/US2011/020031
Filing Date :03/01/2011
(87) International Publication No :WO 2011/082397
(61) Patent of Addition to Application Number :NA
Filing Date :NA
(62) Divisional to Application Number :NA
Filing Date :NA

(71)**Name of Applicant :**
1)MASCO CORPORATION OF INDIANA
Address of Applicant :55 EAST 111TH STREET, INDIANAPOLIS, IN 46280 UNITED STATES OF AMERICA (US) U.S.A.
(72)**Name of Inventor :**
1)ALLEN, BENJAMIN, MICHAEL
2)NELSON, ALFRED, CHARLES

(57) Abstract :
A fluid delivery device including a body having at least one waterway, a valve assembly in fluid communication with the at least one waterway, the valve assembly including a movable valve member configured to control the flow of water through the at least one waterway and a stem operably coupled to the moveable valve member for movement therewith, and a handle coupled to the stem for movement therewith. A magnetically attractive element is supported by one of the handle and the stem, and at least one magnet is supported by the other of the handle and the stem that is configured to magnetically attract the magnetically attractive element to couple the handle to the stem.

No. of Pages : 29 No. of Claims : 27

(12) PATENT APPLICATION PUBLICATION
(19) INDIA
(22) Date of filing of Application :12/06/2012
(21) Application No.5184/DELNP/2012 A
(43) Publication Date : 23/10/2015

(54) Title of the invention : SILICON THIN FILM SOLAR CELL HAVING IMPROVED HAZE AND METHODS OF MAKING THE SAME

(51) International classification :H01L 31/0216
(31) Priority Document No :12/643,299
(32) Priority Date :21/12/2009
(33) Name of priority country :U.S.A.
(86) International Application No :PCT/US2010/059037
Filing Date :06/12/2010
(87) International Publication No :WO 2011/084292
(61) Patent of Addition to Application Number :NA
Filing Date :NA
(62) Divisional to Application Number :NA
Filing Date :NA

(71)**Name of Applicant :**
1)PPG INDUSTRIES OHIO, INC.
Address of Applicant :3800 WEST 143RD STREET, CLEVELAND, OHIO 44111, UNITED STATES OF AMERICA U.S.A.
(72)**Name of Inventor :**
1)LU, SONGWEI

(57) Abstract :
A method of increasing the haze of a coating stack having a top layer (18) and an undercoating layer (16) using a chemical vapor deposition coating process includes at least one of: increasing a precursor flow rate; decreasing a carrier ow rate; increasing a substrate temperature; increasing a water flow rate; asing an exhaust flow rate; and increasing a thickness of at least one of p layer or undercoating layer.

No. of Pages : 16 No. of Claims : 17

(12) PATENT APPLICATION PUBLICATION
(21) Application No.5185/DELNP/2012 A
(19) INDIA
(22) Date of filing of Application :12/06/2012
(43) Publication Date : 23/10/2015

(54) Title of the invention : SILICON THIN FILM SOLAR CELL HAVING IMPROVED UNDERLAYER COATING

(51) International classification :H01L 31/0224
(31) Priority Document No :12/643,448
(32) Priority Date :21/12/2009
(33) Name of priority country :U.S.A.
(86) International Application No :PCT/US2010/059081
Filing Date :06/12/2010
(87) International Publication No :WO 2011/084297
(61) Patent of Addition to Application Number :NA
Filing Date :NA
(62) Divisional to Application Number :NA
Filing Date :NA

(71)**Name of Applicant :**
1)PPG INDUSTRIES OHIO, INC.
Address of Applicant :3800 WEST 143RD STREET, CLEVELAND, OHIO 44111, UNITED STATES OF AEMRICA U.S.A.
(72)**Name of Inventor :**
1)LU, SONGWEI

(57) Abstract :
A spcon thin film solar cell includes a substrate and an undercoating formed ovef at least a portion of the substrate. The undercoating includes first layer haAg tin oxide or titania and a second layer having a mixture of oxides of at lea& two of Sn, P, Si, Ti, A1 and Zr. A conductive coating is formed over at least a p b o n of the frst coating, wherein the conductive coating includes oxides of 9 one& more of Zn, Fe, Mn, Al, Ce, Sn, Sb, Hf, Zr, Ni, Zn, Bi, Ti, Co, Cr, Si - or In or 6 alloy of two or more of these materials. FIG. 1

No. of Pages : 16 No. of Claims : 16

(12) PATENT APPLICATION PUBLICATION
(21) Application No.6194/DELNP/2014 A
(19) INDIA
(22) Date of filing of Application :23/07/2014
(43) Publication Date : 23/10/2015

(54) Title of the invention : CORE MAKING DEVICE AND CORE MAKING METHOD

(51) International classification :B22C15/24,B22C9/10,B22C13/16
(31) Priority Document No :2012117196
(32) Priority Date :23/05/2012
(33) Name of priority country :Japan
(86) International Application No :PCT/JP2013/052930
Filing Date :07/02/2013
(87) International Publication No :WO 2013/175813
(61) Patent of Addition to Application Number :NA
Filing Date :NA
(62) Divisional to Application Number :NA
Filing Date :NA

(71)**Name of Applicant :**
1)SINTOKOGIO LTD.
Address of Applicant :11 11 Nishiki 1 chome Naka ku Nagoya shi Aichi 4600003 Japan
(72)**Name of Inventor :**
1)KATO Shigeyoshi
2)OHASHI Etsuya
3)HARADA Hisashi

(57) Abstract :
Provided is a core making device of which the size can be reduced and which can effectively fill core sand. The present invention is provided with a core mould formed from a pair of moulds capable of separating in the lateral direction and a sand filling device which has a blow head disposed below the core mould and which fills the core mould with core sand by blowing same upward from the blow head wherein: the blow head has a sand blowing chamber which is connected to the core mould and which guides the core sand into the core mould and a sand storage chamber which is in communication with the sand blowing chamber; and the sand filling device has a compressed air supply unit for supply compressed air in order to blow the core sand into the core mould and an aeration air supply unit for supplying aeration air in order to fluidize and float the core sand within the sand blowing chamber.

No. of Pages : 105 No. of Claims : 24

(12) PATENT APPLICATION PUBLICATION
(19) INDIA
(22) Date of filing of Application :23/07/2014
(21) Application No.6198/DELNP/2014 A
(43) Publication Date : 23/10/2015

(54) Title of the invention : ANTACID TABLET

(51) International classification :A61K33/10
(31) Priority Document No :61/594055
(32) Priority Date :02/02/2012
(33) Name of priority country :U.S.A.
(86) International Application No :PCT/US2013/024078
Filing Date :31/01/2013
(87) International Publication No :WO 2013/116477
(61) Patent of Addition to Application Number :NA
Filing Date :NA
(62) Divisional to Application Number :NA
Filing Date :NA

(71)**Name of Applicant :**
1)GLAXOSMITHKLINE LLC
Address of Applicant :One Franklin Plaza 200 North 16th Street Philadelphia PA 19102 U.S.A.
(72)**Name of Inventor :**
1)MIRABILE Maria S.
2)SHAH Sandip G.

(57) Abstract :
Aspects of the present invention are directed to an oral antacid tablet comprising at least about 60% by weight directly compressible granulated calcium carbonate and an intense flavoring. The tablet may have a hardness of at least about 22 Strong Cobb units and the tablet may have a mass of between about 500 mg and about 1 000 mg. Tablets of the present invention reduce or eliminate heartburn symptoms and also freshen breath.

No. of Pages : 12 No. of Claims : 12

(12) PATENT APPLICATION PUBLICATION
(19) INDIA
(22) Date of filing of Application :07/06/2012
(21) Application No.5025/DELNP/2012 A
(43) Publication Date : 23/10/2015

(54) Title of the invention : N-ACYLOXYSULFONAMIDE AND N-HYDROXY-N-ACYLSULFONAMIDE DERIVATIVES

(51) International classification :C07C 311/48
(31) Priority Document No :61/267,401
(32) Priority Date :07/12/2009
(33) Name of priority country :U.S.A.
(86) International Application No :PCT/US2010/059335
Filing Date :07/12/2010
(87) International Publication No :WO 2011/071951
(61) Patent of Addition to Application Number :NA
Filing Date :NA
(62) Divisional to Application Number :NA
Filing Date :NA

(71)**Name of Applicant :**
1)JOHNS HOPKINS UNIVERSITY
Address of Applicant :3400 N. CHARLES ST. BALTIMORE, MARYLAND 21218, UNITED STATES OF AMERICA U.S.A.
2)CARDIOXYL PHARMACEUTICALS, INC
(72)**Name of Inventor :**
1)JOHN P. TOSCANO
2)ART SUTTON
3)VINCENT J. KALISH
4)FREDERICK ARTHUR BROOKFIELD
5)STEPHEN MARTIN COURTNEY
6)LISA MARIE FROST

(57) Abstract :
The invention provides certain N-acyloxysulfonamide and N-hydroxy-N- acylsulfonamide derivative compounds, pharmaceutical compositions and kits comprising such compounds, and methods of using such compounds or pharmaceutical compositions. In particular, the invention provides methods of using such compounds or pharmaceutical compositions for treating, preventing, or delaying the onset and/or develop of a disease or condition. In some embodiments, the disease or condition is selected from cardiovascular diseases, ischemia, reperfusion injury, cancerous disease, pulmonary hypertension and conditions responsive to nitroxyl therapy.

No. of Pages : 134 No. of Claims : 35

(12) PATENT APPLICATION PUBLICATION
(19) INDIA
(22) Date of filing of Application :12/06/2012
(21) Application No.5176/DELNP/2012 A
(43) Publication Date : 23/10/2015

(54) Title of the invention : METHODS FOR REDUCING THE DEPOSITION OF SILICON ON REACTOR WALLS USING PERIPHERAL SILICON TETRACHLORIDE

(51) International classification :B01J 8/02
(31) Priority Document No :61/290,692
(32) Priority Date :29/12/2009
(33) Name of priority country :U.S.A.
(86) International Application No :PCT/US2010/062088
Filing Date :23/12/2010
(87) International Publication No :WO 2011/090689
(61) Patent of Addition to Application Number :NA
Filing Date :NA
(62) Divisional to Application Number :NA
Filing Date :NA

(71)**Name of Applicant :**
1)MEMC ELECTRONIC MATERIALS, INC.
Address of Applicant :501 PEARL DRIVE, ST. PETERS, MISSOURI 63376, UNITED STATES OF AMERCIA U.S.A.
(72)**Name of Inventor :**
1)HENRY FRANK ERK

(57) Abstract :
Fluidized bed reactor systems and distributors are disclosed as well as processes for producing polycrystalline silicon fiom a thermally decomposable silicon compound such as trichlorosilane. The processes generally involve reduction of silicon deposits on reactor walls during polycrystalline silicon production by use of a silicon tetrahalide

No. of Pages : 51 No. of Claims : 53

(12) PATENT APPLICATION PUBLICATION
(19) INDIA
(22) Date of filing of Application :12/06/2012
(21) Application No.5177/DELNP/2012 A
(43) Publication Date : 23/10/2015

(54) Title of the invention : IMPLANTS AND BIODEGRADABLE FIDUCIAL MARKERS

(51) International classification :A61L 27/50
(31) Priority Document No :61/286,450
(32) Priority Date :15/12/2009
(33) Name of priority country :U.S.A.
(86) International Application No :PCT/US2010/060474
Filing Date :15/12/2010
(87) International Publication No :WO 2011/084465
(61) Patent of Addition to Application Number :NA
Filing Date :NA
(62) Divisional to Application Number :NA
Filing Date :NA

(71)**Name of Applicant :**
1)INCEPT, LLC
Address of Applicant :6 PORTER LANE, LEXINGTON, MA 02420, USA U.S.A.
(72)**Name of Inventor :**
1)PATRICK CAMPBELL
2)AMARPREET S. SAWHNEY

(57) Abstract :
Implantable materials may be used in an iatrogenic site. Applications include radioopaque materials for fiducial marking.

No. of Pages : 64 No. of Claims : 55

(12) PATENT APPLICATION PUBLICATION
(19) INDIA
(22) Date of filing of Application :12/06/2012
(21) Application No.5178/DELNP/2012 A
(43) Publication Date : 23/10/2015

(54) Title of the invention : PROCESS FOR EPOXIDATION START-UP

(51) International classification :C07D 301/10
(31) Priority Document No :61/287,393
(32) Priority Date :17/12/2009
(33) Name of priority country :U.S.A.
(86) International Application No :PCT/US2010/060769
Filing Date :16/12/2010
(87) International Publication No :WO 2011/084600
(61) Patent of Addition to Application Number :NA
Filing Date :NA
(62) Divisional to Application Number :NA
Filing Date :NA

(71)**Name of Applicant :**
1)SCIENTIFIC DESIGN COMPANY INC.
Address of Applicant :49 INDUSTRIAL AVENUE, LITTLE FERRY, NEW JERSEY 07643, UNITED STATES OF AMERICA U.S.A.
(72)**Name of Inventor :**
1)HOWARD SACHS
2)ANDRZEJ ROKICKI

(57) Abstract :
A method for the start-up of a process for the epoxidation of ethylene comprising: initiating an epoxidation reaction by reacting a feed gas composition containing ethylene, and oxygen, in the presence of an epoxidation catalyst at a temperature of about 180 OC to about 2 10 OC; adding to the feed gas composition about 0.05 ppm to about 2 ppm of moderator; increasing the first temperature to a second temperature of about 240°C to about 250°C, over a time period of about 12 hours to about 60 hours; and maintaining the second temperature for a time period of about 50 hours to about 150 hours.

No. of Pages : 17 No. of Claims : 13

(12) PATENT APPLICATION PUBLICATION
(19) INDIA
(22) Date of filing of Application :12/06/2012
(21) Application No.5179/DELNP/2012 A
(43) Publication Date : 23/10/2015

(54) Title of the invention : ENERGY RECOVERY SYSTEM AND METHOD

(51) International classification :F02C 9/00
(31) Priority Document No :NA
(32) Priority Date :NA
(33) Name of priority country :NA
(86) International Application No :PCT/US2010/022026
Filing Date :26/01/2010
(87) International Publication No :WO 2011/093850
(61) Patent of Addition to Application Number :NA
Filing Date :NA
(62) Divisional to Application Number :NA
Filing Date :NA

(71)**Name of Applicant :**
1)TMEIC CORPORATION
Address of Applicant :SUTIE 200 1325 ELECTRIC ROAD ROANOKE, VA 24018, USA U.S.A.
(72)**Name of Inventor :**
1)AHMET DURMAZ
2)MARCELO ANDRES LARA

(57) Abstract :
A system and method for converting otherwise wasted energy produced in the form of heated gases as a byproduct of an industrial process into electrical energy. At least some waste gases are diverted from a typical exhaust structure through a heat exchanger and back into the exhaust structure. The amount of gases flowing through the heat exchanger is monitored and regulated by a controller. A heat source liquid is simultaneously circulated under pressure through the heat exchanger and through an organic Rankine cycle system. The amount of heat source liquid being circulated is also monitored and regulated by the controller. The ORC system converts the heat from the heat source liquid into electricity

No. of Pages : 23 No. of Claims : 11

(12) PATENT APPLICATION PUBLICATION
(19) INDIA
(22) Date of filing of Application :23/07/2014
(21) Application No.6216/DELNP/2014 A
(43) Publication Date : 23/10/2015

(54) Title of the invention : SEAWATER FLUE GAS DESULFURIZATION SYSTEM AND POWER GENERATION SYSTEM

(51) International classification :B01D53/50,B01D53/56,B01D53/77
(31) Priority Document No :2012019079
(32) Priority Date :31/01/2012
(33) Name of priority country :Japan
(86) International Application No :PCT/JP2013/051639
Filing Date :25/01/2013
(87) International Publication No :WO 2013/115107
(61) Patent of Addition to Application Number :NA
Filing Date :NA
(62) Divisional to Application Number :NA
Filing Date :NA

(71)**Name of Applicant :**
1)MITSUBISHI HITACHI POWER SYSTEMS LTD.
Address of Applicant :3 1 Minatomirai 3 chome Nishi ku Yokohama shi Kanagawa 2208401 Japan
(72)**Name of Inventor :**
1)YOSHIMOTO Takashi
2)KAGAWA Seiji
3)TAKEUCHI Yasuhiro

(57) Abstract :
This seawater flue gas desulfurization system (10) is characterized by comprising: a flue gas desulfurization absorption tower (11) for cleaning exhaust gas (25) by bringing the exhaust gas (25) and absorbed seawater (21a) into gas liquid contact with each other; an oxidation tank (12) which is provided on the downstream side of the flue gas desulfurization absorption tower (11) and provided with an aeration device (41) for supplying air (29) to sulfur content absorbed seawater (14) containing sulfur content and performs water quality restoration treatment on the sulfur content absorbed seawater (14); a seawater supply line (L11) for supplying seawater (21) to the flue gas desulfurization absorption tower (11); and an air branching line (L12) for supplying part of the air (29) to be supplied to the oxidation tank (12) to a tower bottom part (11a) of the flue gas desulfurization absorption tower (11).

No. of Pages : 31 No. of Claims : 7

(12) PATENT APPLICATION PUBLICATION
(19) INDIA
(22) Date of filing of Application :12/06/2012
(21) Application No.5189/DELNP/2012 A
(43) Publication Date : 23/10/2015

(54) Title of the invention : MINIEMULSION POLYMERIZATION TO PREPARE DRAG REDUCERS

(51) International classification :C08F 2/32
(31) Priority Document No :61/299,200
(32) Priority Date :28/01/2010
(33) Name of priority country :U.S.A.
(86) International Application No :PCT/US2011/022602
Filing Date :26/01/2011
(87) International Publication No :WO 2011/094333
(61) Patent of Addition to Application Number :NA
Filing Date :NA
(62) Divisional to Application Number :NA
Filing Date :NA

(71)**Name of Applicant :**
1)PHILLIPS 66 COMPANY
Address of Applicant :INTELLECTUAL PROPERTY-LEGAL, IP SERVICES GROUP, P.O. BOX 4428, HOUSTON, TEXAS 77210, USA. U.S.A.
(72)**Name of Inventor :**
1)BAO ZHIYI
2)SMITH KENNETH W.

(57) Abstract :
A method of producing a polymer latex drag reducer. The method begins by forming an aqueous solution comprising a surfactant, a buffer and water. The method then forms an organic solution comprising a monomer and a co-stabilizer. The aqueous solution and the organic solution are mixed to form an emulsion. The emulsion is then subjecting to a high shear device to produce a miniemulsion, wherein the monomers are broken into small droplets followed by polymerizing the miniemulsion with the addition of an initiator, wherein a nucleation occurs in the small monomer droplets.

No. of Pages : 22 No. of Claims : 10

(12) PATENT APPLICATION PUBLICATION
(21) Application No.5190/DELNP/2012 A
(19) INDIA
(22) Date of filing of Application :12/06/2012
(43) Publication Date : 23/10/2015

(54) Title of the invention : CLUTCH CONTROL DEVICE FOR INDUSTRIAL VEHICLE'

(51) International classification :F16D 48/02
(31) Priority Document No :2009-283138
(32) Priority Date :14/12/2009
(33) Name of priority country :Japan
(86) International Application No :PCT/JP2010/072497
Filing Date :14/12/2010
(87) International Publication No :WO 2011/074582
(61) Patent of Addition to Application Number :NA
Filing Date :NA
(62) Divisional to Application Number :NA
Filing Date :NA

(71)**Name of Applicant :**
1)HITACHI CONSTRUCTION MACHINERY CO., LTD.
Address of Applicant :5-1, KORAKU 2-CHOME, BUNKYO-KU, TOKYO 112-8563, JAPAN Japan
(72)**Name of Inventor :**
1)HYODO KOJI
2)TAKEYAMA TAKASHI
3)SHIMOHIRA AKIRA

(57) Abstract :
A clutch control device for an industrial vehicIe includes: a braking force detection device that detects braking force of the industrial vehicle; a speed stage detection 5 device that detects a set speed stage of a transmission; a clutch control device that controls engagelrelease of a forward clutch so that the forward clutch is released when a clutch cut off condition is judged to be satisfied based upon braking force ofthe industrial vehicle detccted by the braking force detection device; and a switching device that automatically switches the clutch cut off condition in the clutch control device based upon a set sped 10 stage of the transmission detected by the speed stage detection device.

No. of Pages : 27 No. of Claims : 5

(12) PATENT APPLICATION PUBLICATION
(21) Application No.6207/DELNP/2014 A
(19) INDIA
(22) Date of filing of Application :23/07/2014
(43) Publication Date : 23/10/2015

(54) Title of the invention : BINDER THICKENED WITH XANTHAN GUM

(51) International classification :C09D7/00,C09C1/36,C09D7/12
(31) Priority Document No :61/614769
(32) Priority Date :23/03/2012
(33) Name of priority country :U.S.A.
(86) International Application No :PCT/US2013/033042
Filing Date :20/03/2013
(87) International Publication No :WO 2013/142542
(61) Patent of Addition to Application Number :NA
Filing Date :NA
(62) Divisional to Application Number :NA
Filing Date :NA

(71)**Name of Applicant :**
1)ROHM AND HAAS COMPANY
Address of Applicant :100 Independence Mall West Philadelphia PA 19106 U.S.A.
(72)**Name of Inventor :**
1)AULD Kathleen
2)BROWN Ward Thomas

(57) Abstract :
The present invention relates to a composition comprising an aqueous dispersion of xanthan gum and opacifying pigment particles such as TiO encapsulated with a vinyl ester polymer or a vinyl ester acrylate copolymer as well as a method for its preparation. The composition is useful in coatings formulations especially paint formulations.

No. of Pages : 12 No. of Claims : 10

(12) PATENT APPLICATION PUBLICATION
(19) INDIA
(22) Date of filing of Application :23/07/2014
(21) Application No.6208/DELNP/2014 A
(43) Publication Date : 23/10/2015

(54) Title of the invention : SPECTROMETER DEVICE

(51) International classification :G01N21/62
(31) Priority Document No :61/601276
(32) Priority Date :21/02/2012
(33) Name of priority country :U.S.A.
(86) International Application No :PCT/US2013/027105
Filing Date :21/02/2013
(87) International Publication No :WO 2013/126548
(61) Patent of Addition to Application Number :NA
Filing Date :NA
(62) Divisional to Application Number :NA
Filing Date :NA

(71)**Name of Applicant :**
1)MASSACHUSETTS INSTITUTE OF TECHNOLOGY
Address of Applicant :77 Massachusetts Avenue Cambridge MA 02139 4307 U.S.A.
(72)**Name of Inventor :**
1)BAO Jie
2)BAWENDI Moungi G.

(57) Abstract :
A spectrometer can include a plurality of semiconductor nanocrystals. Wavelength discrimination in the spectrometer can be achieved by differing light absorption and emission characteristics of different populations of semiconductor nanocrystals (e.g. populations of different materials sizes or both). The spectrometer therefore can operate without the need for a grating prism or a similar optical component. A personal UV exposure tracking device can be portable rugged and inexpensive and include a semiconductor nanocrystal spectrometer for recording a user s exposure to UV radiation. Other applications include a personal device (e.g. a smartphone) or a medical device where a semiconductor nanocrystal spectrometer is integrated.

No. of Pages : 82 No. of Claims : 38

(12) PATENT APPLICATION PUBLICATION
(21) Application No.6209/DELNP/2014 A
(19) INDIA
(22) Date of filing of Application :23/07/2014
(43) Publication Date : 23/10/2015

(54) Title of the invention : IMAGE PROCESSING APPARATUS AND IMAGE PROCESSING METHOD

(51) International classification :H04N7/32,H04N13/00
(31) Priority Document No :2012018411
(32) Priority Date :31/01/2012
(33) Name of priority country :Japan
(86) International Application No :PCT/JP2013/051263
Filing Date :23/01/2013
(87) International Publication No :WO 2013/115023
(61) Patent of Addition to Application Number :NA
Filing Date :NA
(62) Divisional to Application Number :NA
Filing Date :NA

(71)**Name of Applicant :**
1)SONY CORPORATION
Address of Applicant :1 7 1 Konan Minato ku Tokyo 1080075 Japan
(72)**Name of Inventor :**
1)TAKAHASHI Yoshitomo
2)NAKAGAMI Ohji

(57) Abstract :
This technique relates to an image processing apparatus and an image processing method for allowing multi viewpoint images to be efficiently generated. An establishing unit of a non base encoding unit establishes view direction management information for managing base images of a base view that are to be stored in a decode picture buffer when dependent images of a dependent view are encoded. An encoding unit of the non base encoding unit encodes the base images and dependent images to generate encoded data. A transmitting unit of the non base encoding unit transmits the established view direction management information and generated encoded data. This technique can be applied to for example an image processing apparatus that encodes multi viewpoint images.

No. of Pages : 118 No. of Claims : 8

(12) PATENT APPLICATION PUBLICATION
(19) INDIA
(22) Date of filing of Application :12/06/2012
(21) Application No.5197/DELNP/2012 A
(43) Publication Date : 23/10/2015

(54) Title of the invention : IMPROVED FLUID COMPRESSOR AND/OR PUMP ARRANGEMENT

(51) International classification :F04C 9/00
(31) Priority Document No :2009905514
(32) Priority Date :12/11/2009
(33) Name of priority country :Australia
(86) International Application No :PCT/AU2010/001518
Filing Date :12/11/2010
(87) International Publication No :WO 2011/057348
(61) Patent of Addition to Application Number :NA
Filing Date :NA
(62) Divisional to Application Number :NA
Filing Date :NA

(71)**Name of Applicant :**
1)EXODUS R&D INTERNATIONAL PTE LTD.
Address of Applicant :213 HENDERSON ROAD, 01-08 HENDERSON INDUSTRIAL PARK, SINGAPORE 159553 Singapore
(72)**Name of Inventor :**
1)FLENCHE, GEORGE

(57) Abstract :
The present invention relates to a compressor or pump unit for the production or flow of compressed fluid and more particularly to a new uniquely designed compressor which has the capabilities to both draw fluid from an intake opening and direct dischargeable compressed fluid to a storage tank utilising a single compressor chamber simultaneously.

No. of Pages : 32 No. of Claims : 18

(12) PATENT APPLICATION PUBLICATION
(19) INDIA
(22) Date of filing of Application :12/06/2012
(21) Application No.5198/DELNP/2012 A
(43) Publication Date : 23/10/2015

(54) Title of the invention : FLUID COMPRESSOR OR PUMP APPARATUS

(51) International classification :F04C 9/00
(31) Priority Document No :2009905515
(32) Priority Date :12/11/2009
(33) Name of priority country :Australia
(86) International Application No :PCT/AU2010/001515
Filing Date :12/11/2010
(87) International Publication No :WO 2011/057345
(61) Patent of Addition to Application Number :NA
Filing Date :NA
(62) Divisional to Application Number :NA
Filing Date :NA

(71)**Name of Applicant :**
1)EXODUS R&D INTERNATIONAL PTE LTD.
Address of Applicant :213 HENDERSON ROAD, 01-08 HENDERSON INDUSTRIAL PARK, SINGAPORE 159553 Singapore
(72)**Name of Inventor :**
1)FLENCHE, GEORGE

(57) Abstract :
The present invention relates to an apparatus which may be in the form of a pump or compressor and which can function to compress or accelerate a fluid such as air, gas, gaseous mixture andlor liquid. In particular, the invention provides a mechanism in which fluid can be admitted and then discharged continuously from each of the radial compartments that the compressor chamber.

No. of Pages : 23 No. of Claims : 15

(12) PATENT APPLICATION PUBLICATION
(21) Application No.5199/DELNP/2012 A
(19) INDIA
(22) Date of filing of Application :12/06/2012
(43) Publication Date : 23/10/2015

(54) Title of the invention : AIR BREATHER ASSEMBLY

(51) International classification :F01M 13/00
(31) Priority Document No :PCT/IN2009/000635
(32) Priority Date :12/11/2009
(33) Name of priority country :India
(86) International Application No :PCT/IN2009/000635
Filing Date :12/11/2009
(87) International Publication No :WO 2011/058571
(61) Patent of Addition to Application Number :NA
Filing Date :NA
(62) Divisional to Application Number :NA
Filing Date :NA

(71)**Name of Applicant :**
1)ARUN KUMAR SINHA
Address of Applicant :14, RAM KISHOR LANE, CIVIL LINES, DELHI-110054, INDIA Delhi India
(72)**Name of Inventor :**
1)ARUN KUMAR SINHA

(57) Abstract :
An air breather vents assembly for a mechanic enclosed environment is disclosed. The air breather assembly comprises a body with a circular centrally oriented exhaust and intake chamber. Plurality of ball valves, plurality of diamond polish seats, spacers, spring, and a cap is provided to cover said body. An air and oil filter housed in the chamber of the body is provided for intake of fresh air and exhaust of air impregnated with oil vapours.

No. of Pages : 20 No. of Claims : 10

(12) PATENT APPLICATION PUBLICATION
(21) Application No.6211/DELNP/2014 A
(19) INDIA
(22) Date of filing of Application :23/07/2014
(43) Publication Date : 23/10/2015

(54) Title of the invention : IMAGE INSPECTING DEVICE AND IMAGE INSPECTING PROGRAM

(51) International classification :G06T7/00
(31) Priority Document No :NA
(32) Priority Date :NA
(33) Name of priority country :NA
(86) International Application No :PCT/JP2014/052448
Filing Date :03/02/2014
(87) International Publication No :WO 2015/114833
(61) Patent of Addition to Application Number :NA
Filing Date :NA
(62) Divisional to Application Number :NA
Filing Date :NA

(71)**Name of Applicant :**
1)PROSPER CREATIVE CO. LTD.
Address of Applicant :Yurakubashi Bldg. 5F 2 2 17 Ginza Chuo ku Tokyo 1040061 Japan
(72)**Name of Inventor :**
1)KAWABATA Hideki
2)KIJIMA Akira

(57) Abstract :
An image inspecting device (10) automatically extracts points of difference between first image data and second image data by comparing the first image data created as data representing a reference image serving as an inspection reference and the second image data created as data representing an inspection image serving as an inspection target. The image inspecting device (10) comprises: a storage means which stores the reference image and the inspection image; an image processing means which performs an image superimposing process by making at least a portion of the stored reference image and at least a portion of the inspection image correspond at the pixel level as the first and second image data; a difference detecting means which detects differences between the two sets of image data by comparing the superimposed first and second image data; an image generating means which compares a plurality of threshold values with the differences to generate error displaying image data for each threshold value; and image inspecting means which performs an image inspecting process using the generated error displaying image data for each threshold value.

No. of Pages : 185 No. of Claims : 21

(12) PATENT APPLICATION PUBLICATION
(19) INDIA
(22) Date of filing of Application :23/07/2014
(21) Application No.6212/DELNP/2014 A
(43) Publication Date : 23/10/2015

(54) Title of the invention : REFRIGERANT MIXTURES COMPRISING TETRAFLUOROPROPENE DIFLUOROMETHANE PENTAFLUOROETHANE AND TETRAFLUOROETHANE AND USES THEREOF

(51) International classification :C09K5/04,C10M171/00
(31) Priority Document No :61/598120
(32) Priority Date :13/02/2012
(33) Name of priority country :U.S.A.
(86) International Application No :PCT/US2013/025656
Filing Date :12/02/2013
(87) International Publication No :WO 2013/122892
(61) Patent of Addition to Application Number :NA
Filing Date :NA
(62) Divisional to Application Number :NA
Filing Date :NA

(71)**Name of Applicant :**
1)E. I. DU PONT DE NEMOURS AND COMPANY
Address of Applicant :1007 Market Street Wilmington Delaware 19898 U.S.A.
(72)**Name of Inventor :**
1)MINOR Barbara Haviland

(57) Abstract :
A non flammable refrigerant mixture is disclosed. The non flammable refrigerant mixture consists essentially of (a) from 20 weight percent to 25.5 weight percent HFO 1234yf (b) from 20 weight percent to 24.5 weight percent HFC 32 (c) from 24.5 weight percent to 30 weight percent HFC 125 (d) from 25.5 weight percent to 30 weight percent HFC 134a and (e) from about 0.0001 weight percent to 10 weight percent trans HFO 1234ze. These refrigerant mixtures are useful as components in compositions also containing non refrigerant components (e.g. lubricants) in processes to produce cooling in methods for replacing refrigerant R 404A or R 507 and in refrigeration apparatus.

No. of Pages : 48 No. of Claims : 19

(12) PATENT APPLICATION PUBLICATION
(21) Application No.3371/DELNP/2012 A
(19) INDIA
(22) Date of filing of Application :18/04/2012
(43) Publication Date : 23/10/2015

(54) Title of the invention : STABILIZATION AND REMOTE RECOVERY OF ACID GAS FRACTION FROM SOUR WELLSITE GAS

(51) International classification :B01D 53/52
(31) Priority Document No :2,683,983
(32) Priority Date :21/10/2009
(33) Name of priority country :Canada
(86) International Application No :PCT/CA2010/001669
Filing Date :21/10/2010
(87) International Publication No :WO 2011/047478
(61) Patent of Addition to Application Number :NA
Filing Date :NA
(62) Divisional to Application Number :NA
Filing Date :NA

(71)**Name of Applicant :**
1)SULVARIS INC.
Address of Applicant :6443-2ND STREET S.E., CALGARY, ALBERTA T2H 1J5 (CA) Canada
(72)**Name of Inventor :**
1)IYER, SATISH
2)KNOLL, RICHARD

(57) Abstract :
A method for the recovery of hydrogen sulphide and other acid gas fractions from sour wellsite gas in hydrocarbon production is provided. The selected acid gas fractions are absorbed into a noncorrosive and transportable solvent solution at the wellsite, the rich solvent solution being transported to a central plant location where it is desorbed from the solvent solution for further handling or processing. The lean solvent solution can then be recycled. Multiple acid gas fractions could be recovered from the sour gas in question using a single appropriate solvent solution. Carbon dioxide could be absorbed and desorbed at the wellsite rather than at the central plant location. Clean gas is yielded at the wellsite for downstream processing or sale.

No. of Pages : 45 No. of Claims : 18

(12) PATENT APPLICATION PUBLICATION
(19) INDIA
(22) Date of filing of Application :18/04/2012
(21) Application No.3372/DELNP/2012 A
(43) Publication Date : 23/10/2015

(54) Title of the invention : RECOVERY OF BUTANOL FROM A MIXTURE OF BUTANOL, WATER, AND AN ORGANIC EXTRACTANT

(51) International classification :C07C 29/86
(31) Priority Document No :61/263,509
(32) Priority Date :23/11/2009
(33) Name of priority country :U.S.A.
(86) International Application No :PCT/US2010/057597
Filing Date :22/11/2010
(87) International Publication No :WO 2011/063323
(61) Patent of Addition to Application Number :NA
Filing Date :NA
(62) Divisional to Application Number :NA
Filing Date :NA

(71)**Name of Applicant :**
1)BUTAMAX TM ADVANCED BIOFUELS LLC
Address of Applicant :200 POWDER MILL ROAD, WILMINGTON, DE 19803, U.S.A. U.S.A.
(72)**Name of Inventor :**
1)GRADY, MICHAEL, CHARLES
2)PARTEN, WILLIAM, D.
3)VRANA, BRUCE
4)XU, YIHUI, TOM

(57) Abstract :
A process for recovering butanol from a mixture comprising a water-immiscible organic extractant, water, butanol, and optionally a non-condensable gas, is provided. The butanol is selected from 1-butanol, 2-butanol, isobutanol, and mixtures thereof. An overhead stream from a first distillation column is condensed to recover a mixed condensate. An entrainer is added to at least one appropriate process stream or vessel such that the mixed condensate comprises sufficient entrainer to provide phase separation of the organic and the aqueous phases to provide for recovery of the butanol.

No. of Pages : 48 No. of Claims : 23

(12) PATENT APPLICATION PUBLICATION
(19) INDIA
(22) Date of filing of Application :13/06/2012
(21) Application No.5206/DELNP/2012 A
(43) Publication Date : 23/10/2015

(54) Title of the invention : GALLING-RESISTANT THREADED TUBULAR COMPONENT, AND PROCESS FOR COATING SAID COMPONENT

(51) International classification :F16L 15/04
(31) Priority Document No :09/06320
(32) Priority Date :23/12/2009
(33) Name of priority country :France
(86) International Application No :PCT/EP2010/007556
Filing Date :10/12/2010
(87) International Publication No :WO 2011/076350
(61) Patent of Addition to Application Number :NA
Filing Date :NA
(62) Divisional to Application Number :NA
Filing Date :NA

(71)**Name of Applicant :**
1)VALLOUREC MANNESMANN OIL & GAS FRANCE
Address of Applicant :54, RUE ANATOLE FRANCE, F-59620 AULNOYE-AYMERIES, FRANCE France
2)SUMITOMO METAL INDUSTRIES LTD.
(72)**Name of Inventor :**
1)ELIETTE PINEL
2)ERIC GARD
3)MIKAEL PETIT
4)MOHAMED GOUIDER

(57) Abstract :
A galling-resistant threaded tubular component for drilling or operating hydrocarbon wells is described, said tubular component having at one of its ends (1; 2) a threaded zone (3; 4) produced on its external or internal peripheral surface depending on whether the threaded end is male or female in type, at least a portion of the end (1; 2) being coated with a dry film comprising a fluorourethane matrix. A process for coating said component.

No. of Pages : 26 No. of Claims : 21

(12) PATENT APPLICATION PUBLICATION
(19) INDIA
(22) Date of filing of Application :23/07/2014
(21) Application No.6220/DELNP/2014 A
(43) Publication Date : 23/10/2015

(54) Title of the invention : ANTISENSE NUCLEIC ACID

(51) International classification	:C12N15/113,A61K31/7088,A61K48/00
(31) Priority Document No	:2011288040
(32) Priority Date	:28/12/2011
(33) Name of priority country	:Japan
(86) International Application No	:PCT/JP2012/084295
Filing Date	:27/12/2012
(87) International Publication No	:WO 2013/100190
(61) Patent of Addition to Application Number	:NA
Filing Date	:NA
(62) Divisional to Application Number	:NA
Filing Date	:NA

(71)**Name of Applicant :**
1)NIPPON SHINYAKU CO. LTD.
Address of Applicant :14 Kisshoin Nishinosho Monguchicho Minami ku Kyoto shi Kyoto 6018550 Japan
2)NATIONAL CENTER OF NEUROLOGY AND PSYCHIATRY
(72)**Name of Inventor :**
1)WATANABE Naoki
2)SEO Haruna
3)TAKEDA Shinichi
4)NAGATA Tetsuya

(57) Abstract :
The purpose of the invention is to provide a drug to produce highly efficient skipping of exons 55 45 50 and 44 of a human dystrophin gene. The invention provides an oligomer that makes it possible to skip exons 55 45 50 and 44 of a human dystrophin gene.

No. of Pages : 146 No. of Claims : 20

(12) PATENT APPLICATION PUBLICATION
(19) INDIA
(22) Date of filing of Application :23/07/2014
(21) Application No.6221/DELNP/2014 A
(43) Publication Date : 23/10/2015

(54) Title of the invention : CALIBRATION OF CURRENT SENSORS IN PARALLEL POWER CONVERTERS

(51) International classification :G01R31/42,G01R35/00,H02M7/493
(31) Priority Document No :NA
(32) Priority Date :NA
(33) Name of priority country :NA
(86) International Application No :PCT/IB2012/000250
Filing Date :05/01/2012
(87) International Publication No :WO 2013/102784
(61) Patent of Addition to Application Number :NA
Filing Date :NA
(62) Divisional to Application Number :NA
Filing Date :NA

(71)**Name of Applicant :**
1)AMERICAN POWER CONVERSION CORPORATION
Address of Applicant :132 Fairgrounds Road West Kingston RI 02892 U.S.A.
(72)**Name of Inventor :**
1)BERARD Olivier

(57) Abstract :
An uninterruptible power supply (UPS) system (100) comprises a plurality of UPS units (UPS 1 UPS 2) connected in parallel. The controllers (130) of the units are programmed to implement a voltage calibration procedure and a current calibration procedure in order that measurements of voltage and current made by sensors within the different units will agree. In the current calibration procedure the load is disconnected (302) while one of the units is selected as a master and operates in a voltage control mode (VCM) (Steps 304 308). Each other unit is selected in turn and operated in a current control mode (310 312). Current measurements made in the master unit are communicated (314) via a data bus to the selected unit and compared (316) with measurements made in the unit itself. The unit adapts its current sensing gains to match the master unit.

No. of Pages : 25 No. of Claims : 21

(12) PATENT APPLICATION PUBLICATION
(19) INDIA
(22) Date of filing of Application :13/06/2012
(21) Application No.5209/DELNP/2012 A
(43) Publication Date : 23/10/2015

(54) Title of the invention : 7-[3,5-DIHYDROXY-2-(3-HYDROXY-5-PHENYL-PENT-1-ENYL)-CYCLOPENTYL]-N- ETHYL-HEPT-5-ENAMIDE (BIMATOPROST) IN CRYSTALLINE FORM II, METHODS FOR PREPRATION, AND METHODS FOR USE THEREOF

(51) International classification :C07C 405/00
(31) Priority Document No :61/263,471
(32) Priority Date :23/11/2009
(33) Name of priority country :U.S.A.
(86) International Application No :PCT/US2010/057494
Filing Date :19/11/2010
(87) International Publication No :WO 2011/063276
(61) Patent of Addition to Application Number :NA
Filing Date :NA
(62) Divisional to Application Number :NA
Filing Date :NA

(71)**Name of Applicant :**
1)ALLERGAN, INC.
Address of Applicant :2525 DUPONT DRIVE, T2-7H, IRVINE, CA 92612, UNITED STATES OF AMERICA U.S.A.
(72)**Name of Inventor :**
1)GYORGY F. AMBRUS
2)KIOMARS KARAMI
3)KE WU

(57) Abstract :
The present invention provides a new crystalline form of bimatoprost, designated as crystalline form 11. This new crystalline form is the most stable form known to date of bimatoprost. Moreover, it has been found that bimatoprost crystalline form I1 is readily prepared from crystalline form I.

No. of Pages : 26 No. of Claims : 11

(12) PATENT APPLICATION PUBLICATION
(21) Application No.5210/DELNP/2012 A
(19) INDIA
(22) Date of filing of Application :13/06/2012
(43) Publication Date : 23/10/2015

(54) Title of the invention : DEVICE FOR ACTIVE STEERING OF A VEHICLE AND A STEERING MECHANISM WITH SUCH A DEVICE

(51) International classification :B62D 5/00
(31) Priority Document No :1050009-8
(32) Priority Date :11/01/2010
(33) Name of priority country :Sweden
(86) International Application No :PCT/SE2010/051376
Filing Date :14/12/2010
(87) International Publication No :WO 2011/084095
(61) Patent of Addition to Application Number :NA
Filing Date :NA
(62) Divisional to Application Number :NA
Filing Date :NA

(71)**Name of Applicant :**
1)SCANIA CV AB
Address of Applicant :S-151 87 SODERTALJE, SWEDEN Sweden
(72)**Name of Inventor :**
1)MALTE ROTHHAMEL

(57) Abstract :
The invention relates to a device for active steering of a truck provided with a power steering arrangement (50), comprising a steering wheel gear (10) of 5 differential type for transmitting to an output shaft (34) both a steering wheel angle deflection from an input shaft and a steering angle deflection which is superimposed on the steering wheel angle deflection by a positioning means. According to the invention, the transmission of the steering wheel angle deflection in the steering wheel gear (1 0) is catered for by a gear step (a, b, c, d) 10 to gear down the steering wheel angle deflection to the output shaft (34), with a ratio such that the truck can be steered manually in the event of failure of the power steering (50).

No. of Pages : 13 No. of Claims : 8

(12) PATENT APPLICATION PUBLICATION
(21) Application No.6225/DELNP/2014 A
(19) INDIA
(22) Date of filing of Application :23/07/2014
(43) Publication Date : 23/10/2015

(54) Title of the invention : APPARATUS AND METHOD FOR CONTROL OF SEMICONDUCTOR SWITCHING DEVICES

(51) International classification :H03K17/082,H03K17/16
(31) Priority Document No :NA
(32) Priority Date :NA
(33) Name of priority country :NA
(86) International Application No :PCT/IB2012/000160
Filing Date :05/01/2012
(87) International Publication No :WO 2013/102778
(61) Patent of Addition to Application Number :NA
Filing Date :NA
(62) Divisional to Application Number :NA
Filing Date :NA

(71)**Name of Applicant :**
1)AMERICAN POWER CONVERSION CORPORATION
Address of Applicant :132 Fairgrounds Road West Kingston Rhode Island 02892 U.S.A.
(72)**Name of Inventor :**
1)MATHIEU Denis Ren Pierre

(57) Abstract :
Disclosed is a control circuit for control of a semiconductor switching device such as an IGBT. The control circuit comprising a first feedback path between a first electrode and a control electrode of said semiconductor switching device which has a capacitance. The circuit is operable such that the capacitance in the first feedback path is dependent on the voltage level at said first electrode. In another embodiment the control circuit is operable such that a feedback signal begins to flow in the first feedback path immediately as the semiconductor switching device begins switching off thereby causing a control action on the semiconductor switching device.

No. of Pages : 17 No. of Claims : 19

(12) PATENT APPLICATION PUBLICATION
(21) Application No.6226/DELNP/2014 A
(19) INDIA
(22) Date of filing of Application :23/07/2014
(43) Publication Date : 23/10/2015

(54) Title of the invention : PRODUCTION METHOD FOR POLYAMIDE

(51) International classification :C08G69/28
(31) Priority Document No :2012041523
(32) Priority Date :28/02/2012
(33) Name of priority country :Japan
(86) International Application No :PCT/JP2013/054828
Filing Date :25/02/2013
(87) International Publication No :WO 2013/129341
(61) Patent of Addition to Application Number :NA
Filing Date :NA
(62) Divisional to Application Number :NA
Filing Date :NA

(71)**Name of Applicant :**
1)MITSUBISHI GAS CHEMICAL COMPANY INC.
Address of Applicant :5 2 Marunouchi 2 chome Chiyoda ku Tokyo 1008324 Japan
(72)**Name of Inventor :**
1)TOCHIHARA Tatsuya
2)SHINOHARA Katsumi

(57) Abstract :
The present invention provides a production method for polyamides whereby adherance of matter to a reaction tank gas phase section and a vapor tube is suppressed and little mixing in of unmelted matter caused by said adhered matter occurs in the obtained product and in which: a diamine component including at least 70 mol% paraxylene diamine and a dicarboxylic acid component including at least 70 mol% C6 18 aliphatic dicarboxylic acid are directly melt polymerized in the absence of a solvent in a batch type reaction device comprising agitation blades; (1) the diamine component and the dicarboxylic acid component are reacted under pressure conditions of 0.2 0.5 MPa (Abs); (2) the gas phase section temperature inside the reaction tank during the reaction is held at 200°C or higher; (3) inside the reaction tank is agitated such that the agitation Froude number indicated by a specific formula is 0.0002 0.15 from the start of the addition of the diamine component until after the completion thereof and before pressure reduction starts; and (4) agitation blades are used that do not have a structural body in the horizontal direction or have a structural body in the horizontal direction that does not come in contact with the reaction fluid or the boundary of the gas phase section during agitation.

No. of Pages : 53 No. of Claims : 4

(12) PATENT APPLICATION PUBLICATION
(21) Application No.6213/DELNP/2014 A
(19) INDIA
(22) Date of filing of Application :23/07/2014
(43) Publication Date : 23/10/2015

(54) Title of the invention : IMPROVED PROCESS FOR THE PREPARATION OF STABLE CRYSTALLINE FORM I OF LINEZOLID SUBSTANTIALLY FREE OF RESIDUAL SOLVENT

(51) International classification :C07D263/20,C07D263/24
(31) Priority Document No :200/DEL/2012
(32) Priority Date :24/01/2012
(33) Name of priority country :India
(86) International Application No :PCT/IB2013/050537
Filing Date :22/01/2013
(87) International Publication No :WO 2013/111048
(61) Patent of Addition to Application Number :NA
Filing Date :NA
(62) Divisional to Application Number :NA
Filing Date :NA

(71)**Name of Applicant :**
1)JUBILANT LIFE SCIENCES LIMITED
Address of Applicant :Plot 1A Sector 16 A Noida Uttar Pradesh 201 301 Uttar Pradesh India
(72)**Name of Inventor :**
1)BISWAS Sujay
2)PANDA Atulya Kumar
3)GUPTA Ashish Kumar
4)SINGH Shishupal
5)TIWARI Praveen
6)VIR Dharam
7)THOMAS Saji

(57) Abstract :
The invention relates to a substantially pure linezolid hydroxide having R isomer content more than about 99.9% relative to its S isomer. Further aspect of invention provides the ambient moisture condition which is critical for enantiomeric pure linezolid hydroxide. The obtained substantially enantiomerically pure linezolid hydroxide compound of formula II can be subsequently converted into the linezolid compound of formula I having S isomer content more than 99.9% relative to R isomer. Further the invention provides an improved process for preparation of enantiomeric pure linezolid Form I wherein linezolid Form I having the purity more than 99.9% relative to any other known polymorphic form of linezolid. The obtained enantiomeric pure linezolid Form I can be subsequently converted into the other known polymorphic forms linezolid. The invention also provides stable and substantially solvent free crystal of Form I of linezolid.

No. of Pages : 44 No. of Claims : 48

(12) PATENT APPLICATION PUBLICATION
(21) Application No.6214/DELNP/2014 A
(19) INDIA
(22) Date of filing of Application :23/07/2014
(43) Publication Date : 23/10/2015

(54) Title of the invention : MOVABLE BODY POSITION MEASURING SYSTEM CENTRAL STATION QUESTION CONTROL METHOD USED THEREIN AND STORAGE MEDIUM ON WHICH PROGRAM THEREOF HAS BEEN STORED

(51) International classification :G01S13/91,G01S13/76
(31) Priority Document No :2012030052
(32) Priority Date :15/02/2012
(33) Name of priority country :Japan
(86) International Application No :PCT/JP2013/000759
Filing Date :13/02/2013
(87) International Publication No :WO 2013/121775
(61) Patent of Addition to Application Number :NA
Filing Date :NA
(62) Divisional to Application Number :NA
Filing Date :NA

(71)**Name of Applicant :**
1)NEC CORPORATION
Address of Applicant :7 1 Shiba 5 chome Minato ku Tokyo 1088001 Japan
(72)**Name of Inventor :**
1)SATO Takeshi
2)KONDO Tempei
3)KITAJIMA Masaaki

(57) Abstract :
An aircraft position measuring system comprises at least one or more transmitting apparatuses (3) that transmit to a movable body (4) question signals used for acquiring response signals. A central station (1) comprises: a question signal determining means that determines as question control information the question signals which are to be transmitted by the transmitting apparatuses and transmission times at which the question signals are to be transmitted by the transmitting apparatuses; and a means that transmits to the transmitting apparatuses the question control information determined by the question signal determining means. The question signal determining means which includes a means for determining a system status every first time frame that is a time interval obtained by division using a predetermined time width determines on the basis of the system status the question signals which are to be transmitted by the transmitting apparatuses and the transmission times at which the question signals are to be transmitted by the transmitting apparatuses. This provides a movable body position measuring system that can immediately transmit question signals to an aircraft which requires the question signals while restricting the number of question signal transmissions below a specified upper limit without transmitting unnecessary question signals.

No. of Pages : 34 No. of Claims : 22

(12) PATENT APPLICATION PUBLICATION
(19) INDIA
(22) Date of filing of Application :23/07/2014
(21) Application No.6215/DELNP/2014 A
(43) Publication Date : 23/10/2015

(54) Title of the invention : MOBILE PHONE SECURITY PROTECTION METHOD AND DEVICE

(51) International classification :H04W4/12,H04W88/02
(31) Priority Document No :201210017606.7
(32) Priority Date :19/01/2012
(33) Name of priority country :China
(86) International Application No :PCT/CN2013/070717
Filing Date :18/01/2013
(87) International Publication No :WO 2013/107395
(61) Patent of Addition to Application Number :NA
Filing Date :NA
(62) Divisional to Application Number :NA
Filing Date :NA

(71)**Name of Applicant :**
1)TENCENT TECHNOLOGY (SHENZHEN) COMPANY LIMITED
Address of Applicant :Room 403 East Block 2 SEG Park Zhenxing Road Futian District Shenzhen Guangdong 518044 China
(72)**Name of Inventor :**
1)WANG Qing
2)LUO Zhanghu
3)HUANG Zefeng
4)GUO Haoran
5)XIAO Quanhao
6)YUAN Yixia
7)SONG Jiashun
8)LI Pengtao
9)DAI Yunfeng

(57) Abstract :
Provided are a mobile phone security protection method and device. The method comprises: determining whether a mobile phone meets a preset condition for enabling a security mode; if yes enabling the security mode; sending security protection information to a designated contact to notify the designated contact to perform security processing on the mobile phone. The device comprises a determination module an enabling module and a sending module. The solution relates to the information processing field. After the security mode is enabled the security protection information is sent to the designated contact to notify the designated contact to perform security processing on the mobile phone so that the designated contact does not miss the anti theft timing thereby facilitating retrieval of the stolen mobile phone and effectively reducing leakage of private information of the user.

No. of Pages : 33 No. of Claims : 16

(12) PATENT APPLICATION PUBLICATION
(19) INDIA
(22) Date of filing of Application :13/06/2012
(21) Application No.5215/DELNP/2012 A
(43) Publication Date : 23/10/2015

(54) Title of the invention : DEVICE FOR GENERATING ELECTRIC ENERGY FROM A HEAT-CONDUCTING MATERIAL

(51) International classification :H01L 35/30
(31) Priority Document No :10 2010 004 200.5
(32) Priority Date :08/01/2010
(33) Name of priority country :Germany
(86) International Application No :PCT/EP2011/050086
Filing Date :05/01/2011
(87) International Publication No :WO 2011/083116
(61) Patent of Addition to Application Number :NA
Filing Date :NA
(62) Divisional to Application Number :NA
Filing Date :NA

(71)**Name of Applicant :**
1)EMITEC GESELLSCHAFT FUR EMISSIONSTECHNOLOGIE MBH
Address of Applicant :HAUPTSTRAE 128 53797 LOHMAR (DE) Germany
(72)**Name of Inventor :**
1)BRUCK, ROLF
2)LIMBECK, SIGRID

(57) Abstract :
The invention relates to a device (1) for generating electric energy, comprising at least one heated heat-conducting base (2) having at least one projection (3) and thermoelectric elements (4) which are laterally attached to the at least one projection (3), a thermoelectric efficiency of every thermoelectric element (4) and a thermal capacity of the at least one projection (3) being matched to each other.

No. of Pages : 20 No. of Claims : 6

(12) PATENT APPLICATION PUBLICATION
(19) INDIA
(22) Date of filing of Application :13/06/2012
(21) Application No.5216/DELNP/2012 A
(43) Publication Date : 23/10/2015

(54) Title of the invention : CALL-TRACKING.

(51) International classification :G06Q 30/00
(31) Priority Document No :NA
(32) Priority Date :NA
(33) Name of priority country :NA
(86) International Application No :PCT/SE2009/051515
Filing Date :30/12/2009
(87) International Publication No :WO 2011/081584
(61) Patent of Addition to Application Number :NA
Filing Date :NA
(62) Divisional to Application Number :NA
Filing Date :NA

(71)**Name of Applicant :**
1)TELEFONAKTIEBOLAGET LM ERICSSON (PUBL)
Address of Applicant :SE-164 83 STOCKHOLM (SE) Sweden
(72)**Name of Inventor :**
1)SKOG, ROBERT
2)GABRIELSSON, JAN

(57) Abstract :
A method for call-tracking, call-tracking systems, an HTTP proxy server computer program, web server hosts, web server computer programs and computer program products are disclosed. The method comprises the following steps: forwarding a request for a web page; receiving a reply message comprising a second telephone number; retrieving and storing a first telephone number, the second telephone number, a time associated with the forwarding of the reply message, and a service provider indicator; receiving a trigger message comprising two telephone numbers; determining whether the two telephone numbers correspond to the first telephone number and the second telephone number; and, if the two telephone numbers correspond, determining, based on a time difference, whether the call has been made within a predetermined time or predetermined time interval; and, if the call has been made within the predetermined time or predetermined time interval, store information related to the call.

No. of Pages : 51 No. of Claims : 31

(12) PATENT APPLICATION PUBLICATION
(19) INDIA
(22) Date of filing of Application :23/07/2014
(21) Application No.6230/DELNP/2014 A
(43) Publication Date : 23/10/2015

(54) Title of the invention : MEDIUM WITH INK RECEIVING AND OPACITY CONTROL LAYERS

(51) International classification :B32B27/08,B32B7/12,B32B37/00
(31) Priority Document No :NA
(32) Priority Date :NA
(33) Name of priority country :NA
(86) International Application No :PCT/US2012/030663
Filing Date :27/03/2012
(87) International Publication No :WO 2013/147747
(61) Patent of Addition to Application Number :NA
Filing Date :NA
(62) Divisional to Application Number :NA
Filing Date :NA

(71)**Name of Applicant :**
1)HEWLETT PACKARD DEVELOPMENT COMPANY L.P.
Address of Applicant :11445 Compaq Center Drive W. Houston TX 77070 U.S.A.
(72)**Name of Inventor :**
1)FU Xulong
2)STEICHEN Christine E.
3)PAL Lokendra

(57) Abstract :
A graphics medium (200) may have an ink receiving layer (203) with at least fifty percent hyrogel by weight and an opacity control layer (202) with a polymer embedded with at least one filler material.

No. of Pages : 20 No. of Claims : 15

(12) PATENT APPLICATION PUBLICATION
(19) INDIA
(22) Date of filing of Application :23/07/2014
(21) Application No.6231/DELNP/2014 A
(43) Publication Date : 23/10/2015

(54) Title of the invention : PISTON PUMP

(51) International classification :F02M59/10,F04B1/04
(31) Priority Document No :10 2012 203 428.5
(32) Priority Date :05/03/2012
(33) Name of priority country :Germany
(86) International Application No :PCT/EP2013/050145
Filing Date :07/01/2013
(87) International Publication No :WO 2013/131662
(61) Patent of Addition to Application Number :NA
Filing Date :NA
(62) Divisional to Application Number :NA
Filing Date :NA

(71)**Name of Applicant :**
1)ROBERT BOSCH GMBH
Address of Applicant :Postfach 30 02 20 70442 Stuttgart Germany
(72)**Name of Inventor :**
1)MEIER Gerhard
2)MEINZER Dominik
3)SCHETTER Markus
4)ALEKER Jochen
5)GENTE Arnold
6)DUTT Andreas
7)MAURER Frank
8)GREINER Matthias

(57) Abstract :
The invention relates to a piston pump in particular a high pressure fuel pump comprising a housing (1) a piston and a drive shaft (2) having a cam section (3) on which the piston is at least indirectly supported via a guide roller (5) that is rotatably mounted in a roller plunger (4) wherein laterally on either of the two sides of the cam section (3) a rim (6) is provided that protrudes in the radial direction beyond the cam section (3) wherein the rim (6) tapers on one front face directed towards the guide roller (5) to an outer circumference of the rim (6) wherein the rim (6) is in particular conical so that an angular opening results wherein the cam roller comprises a convex curvature directed towards the rim (6) preferably with a radius (r). Alternatively also the rim can have a convex curvature and the roller can taper conically.

No. of Pages : 15 No. of Claims : 10

(12) PATENT APPLICATION PUBLICATION
(19) INDIA
(22) Date of filing of Application :23/07/2014
(21) Application No.6232/DELNP/2014 A
(43) Publication Date : 23/10/2015

(54) Title of the invention : MULTITHREADED COMPUTING

(51) International classification :G06F9/54
(31) Priority Document No :61/589468
(32) Priority Date :23/01/2012
(33) Name of priority country :U.S.A.
(86) International Application No :PCT/US2013/022729
Filing Date :23/01/2013
(87) International Publication No :WO 2013/126170
(61) Patent of Addition to Application Number :NA
Filing Date :NA
(62) Divisional to Application Number :NA
Filing Date :NA

(71)**Name of Applicant :**
1)ADVANCED MICRO DEVICES INC.
Address of Applicant :One AMD Place Sunnyvale CA 94088 U.S.A.
(72)**Name of Inventor :**
1)HOUSTON Michael Clair
2)MANTOR Michael
3)HOWES Lee W.
4)GASTER Benedict R.

(57) Abstract :
A system method and computer program product are provided for improving resource utilization of multithreaded applications. Rather than requiring threads to block while waiting for data from a channel or requiring context switching to minimize blocking the techniques disclosed herein provide an event driven approach to launch kernels only when needed to perform operations on channel data and then terminate in order to free resources. These operations are handled efficiently in hardware but are flexible enough to be implemented in all manner of programming models.

No. of Pages : 30 No. of Claims : 24

(12) PATENT APPLICATION PUBLICATION
(21) Application No.5224/DELNP/2012 A
(19) INDIA
(22) Date of filing of Application :13/06/2012
(43) Publication Date : 23/10/2015

(54) Title of the invention : BALANCING DEVICE, EXTERNAL MEDICAL FUNCTIONAL DEVICE, TREATMENT DEVICE, AND METHODS

(51) International classification :A61M 1/16
(31) Priority Document No :10 2009 058 681.4
(32) Priority Date :16/12/2009
(33) Name of priority country :Germany
(86) International Application No :PCT/EP2010/007647
Filing Date :15/12/2010
(87) International Publication No :WO 2011/082783
(61) Patent of Addition to Application Number :NA
Filing Date :NA
(62) Divisional to Application Number :NA
Filing Date :NA

(71)**Name of Applicant :**
1)FRESENIUS MEDICAL CARE DEUTSCHLAND GMBH
Address of Applicant :ELSE-KROENER-STRASSE 1, 61352 BAD HOMBURG (DE) Germany
(72)**Name of Inventor :**
1)PETERS, ARNE
2)HEIDE, ALEXANDER

(57) Abstract :
The present invention relates to a balancing unit (100) for medical fluids comprising at least one balancing chamber and at least one conveying means for filling the balancing chamber, wherein the conveying means is a pressure controlled conveying means and/or is designed and provided for being operated in at least one operating state as a constantpressure source. The present invention further relates to an external medical functional means (200), a treatment apparatus (300) and methods.

No. of Pages : 40 No. of Claims : 17

(12) PATENT APPLICATION PUBLICATION
(19) INDIA
(22) Date of filing of Application :13/06/2012
(21) Application No.5226/DELNP/2012 A
(43) Publication Date : 23/10/2015

(54) Title of the invention : SELF-INJECTION DEVICE

(51) International classification :A61M 5/315
(31) Priority Document No :NA
(32) Priority Date :NA
(33) Name of priority country :NA
(86) International Application No :PCT/US2009/006576
Filing Date :16/12/2009
(87) International Publication No :WO 2011/075104
(61) Patent of Addition to Application Number :NA
Filing Date :NA
(62) Divisional to Application Number :NA
Filing Date :NA

(71)**Name of Applicant :**
1)BECTON, DICKINSON AND COMPANY
Address of Applicant :1 BECTON DRIVE, FRANKLIN LAKES, NJ 07417 UNITED STATES OF AMERICA U.S.A.
(72)**Name of Inventor :**
1)SONDEREGGER, RALPH
2)CHRISTENSEN, COREY
3)VEDRINE, LIONEL

(57) Abstract :
A drug delivery device (1 00) includes a body (1 02, 1 16) having a reservoir (160) disposed therein for containing a medicament and an injection needle (152) for penetrating the skin of a patient, the needle (1 52) providing a path for the medicament between the reservoir (1 60) and the patient. The device (100) also includes a plunger (1 44) movable within the body (1 02, 1 16) for causing the medicament to be expelled from the reservoir (160), and a biasing means (140) for biasing the plunger (144) toward the reservoir (1 60), wherein in a pre-activated position, the biasing means (1 40) telescopes within itself, and upon activation, provides a force to the plunger (144) for expelling the medicament from the reservoir (160). The biasing means (140) is preferably provided in the form of a conical spring having a variable pitch.

No. of Pages : 53 No. of Claims : 16

(12) PATENT APPLICATION PUBLICATION
(21) Application No.6560/DELNP/2012 A
(19) INDIA
(22) Date of filing of Application :25/07/2012
(43) Publication Date : 23/10/2015

(54) Title of the invention : BIOORGANICALLY-AUGMENTED HIGH-VALUE FERTILIZER •

(51) International classification :A01N
(31) Priority Document No :61/291,205
(32) Priority Date :30/12/2009
(33) Name of priority country :U.S.A.
(86) International Application No :PCT/US2010/062504
Filing Date :30/12/2010
(87) International Publication No :WO 2011/082301
(61) Patent of Addition to Application Number :NA
Filing Date :NA
(62) Divisional to Application Number :NA
Filing Date :NA

(71)**Name of Applicant :**
1)VITAG HOLDINGS LLC
Address of Applicant :117 Allwin Lane Beech Island SC 29842 U.S.A.
(72)**Name of Inventor :**
1)JEFFREY C. BURNHAM
2)JAMES P. CARR
3)GARY L. DAHMS

(57) Abstract :
The invention is directed to processes for treating biosolids that result in high- value, nitrogen-containing, slow-release, organically-augmented inorganic fertilizer that are competitive with less valuable or more costly conventional commercially manufactured fertilizers. The process involves conditioning traditional waste-water biosolids and processing the conditioned biosolids continuously in a high throughput manufacturing facility. The exothermic design and closed loop control of the primary reaction vessel decreases significantly the amount of power necessary to run a manufacturing facility. The process utilizes green technologies to facilitate decreased waste and enhanced air quality standards over traditional processing plants. The fertilizer produced from recovered biosolid waste is safe and meets or exceeds the United States Environment Protection Agency (USEPA) Class A and Exceptional Quality standards and is not subject to restrictions or regulations.

No. of Pages : 54 No. of Claims : 39

(12) PATENT APPLICATION PUBLICATION
(19) INDIA
(22) Date of filing of Application :25/07/2012
(21) Application No.6561/DELNP/2012 A
(43) Publication Date : 23/10/2015

(54) Title of the invention : CONNECTOR FOR CONTAINERS CONTAINING A MEDICINAL ACTIVE SUBSTANCE •

(51) International classification :B23B
(31) Priority Document No :10151718.3
(32) Priority Date :26/01/2010
(33) Name of priority country :EPO
(86) International Application No :PCT/EP2011/050376
Filing Date :13/01/2011
(87) International Publication No :WO 2011/092057
(61) Patent of Addition to Application Number :NA
Filing Date :NA
(62) Divisional to Application Number :NA
Filing Date :NA

(71)**Name of Applicant :**
1)FRESENIUS KABI DEUTSCHLAND GMBH
Address of Applicant :Else-Krner-Strasse 1 61352 Bad Homburg Germany
(72)**Name of Inventor :**
1)ISMAEL RAHIMY
2)TORSTEN BRANDENBURGER

(57) Abstract :
The invention relates to a connector for containers (2) containing a medicinal active substance. The connector (1, 1) according to the invention comprises a first connection region (3a, 3a) for connecting a first container (2) , a piercing element (4, 4) and a break-open element (5), wherein the piercing element (4, 4) has a first end section (6a, 6a) and a second end section (6b, 6b) and a channel (7), running from the first end section (6a, 6a) to the second end section (6b, 6b), for transporting a medicinal active substance, wherein the first end section (6a, 6a) is formed for piercing a membrane (8) of the first container (2) connected in the first connection region, and, at the second end section (6b, 6b), the break-open element (5) is attached such that it can be broken open and/or broken off, wherein, in the attached state, the break-open element (5) seals the channel (7) of the piercing element (4, 4) in liquid-tight fashion.

No. of Pages : 28 No. of Claims : 16

(12) PATENT APPLICATION PUBLICATION
(19) INDIA
(22) Date of filing of Application :20/04/2012
(21) Application No.3428/DELNP/2012 A
(43) Publication Date : 23/10/2015

(54) Title of the invention : PHARMACEUTICAL FORMULATIONS OF NITRITE AND USES THEREOF •

(51) International classification :A61K
(31) Priority Document No :61/251,483
(32) Priority Date :14/10/2009
(33) Name of priority country :U.S.A.
(86) International Application No :PCT/US2010/052683
Filing Date :14/10/2010
(87) International Publication No : NA
(61) Patent of Addition to Application Number :NA
Filing Date :NA
(62) Divisional to Application Number :NA
Filing Date :NA

(71)**Name of Applicant :**
1)THERAVASC INC.
Address of Applicant :10000 Cedar Avenue GCIC Mail Stop # 1 Cleveland Ohio 44106 United States of America U.S.A.
(72)**Name of Inventor :**
1)KEVIL Christopher
2)GIORDANO Anthony
3)FLANAGAN Douglas R.
4)CONSTANTINIDES Panayiotis P.

(57) Abstract :
The present invention relates to pharmaceutical compositions of nitrites such as inorganic nitrites or any pharmaceutically acceptable salts solvates or prodrugs thereof and the medical use of these compositions. The pharmaceutical compositions which can be formulated for oral administration can provide immediate release or extended release of the nitrite ion (NO2). The pharmaceutical compositions of the invention are useful for example for the treatment of chronic tissue ischemia.

No. of Pages : 60 No. of Claims : 64

(12) PATENT APPLICATION PUBLICATION
(19) INDIA
(22) Date of filing of Application :20/04/2012
(21) Application No.3429/DELNP/2012 A
(43) Publication Date : 23/10/2015

(54) Title of the invention : SEGMENTED WIND ROTOR BLADE FOR WIND TURBINE GENERATOR SYSTEM AND ASSEMBLYING METHOD THEREOF

(51) International classification :F03D 1/06
(31) Priority Document No :201010033771.2
(32) Priority Date :11/01/2010
(33) Name of priority country :China
(86) International Application No :PCT/CN2010/001688
Filing Date :25/10/2010
(87) International Publication No :WO 2011/082511
(61) Patent of Addition to Application Number :NA
Filing Date :NA
(62) Divisional to Application Number :NA
Filing Date :NA

(71)**Name of Applicant :**
1)SINOVEL WIND GROUP CO., LTD.
Address of Applicant :19F, CULTURE BUILDING, NO. 59, ZHONGGUANCUN STREET, HAIDIAN DISTRICT, BEIJING 100872, CHINA China
(72)**Name of Inventor :**
1)WANG, WEIFENG
2)JIN, BAONIAN
3)LIU, ZUOHUI
4)DANG, QUN
5)WANG. SHUAI

(57) Abstract :
A segmented wind rotor blade for a wind turbine generator system and the assembling method thereof are disclosed. The segmented wind rotor blade includes a blade root section (1) adjacent to a hub and at least one radial blade (2). Main girders (3) are embedded inside both the blade root section (1) and the radial blades (2). The blade root section (1) and each radial blade (2) are connected end to end through the main girders (3) connecting one by one. The effects of great connection intensity and less aerodynamic loss can be realized by the segmented wind rotor blade. Figure 3 is the representative figure.

No. of Pages : 25 No. of Claims : 13

(12) PATENT APPLICATION PUBLICATION
(19) INDIA
(22) Date of filing of Application :25/07/2012
(21) Application No.6566/DELNP/2012 A
(43) Publication Date : 23/10/2015

(54) Title of the invention : OXIDATION SYSTEM WITH SIDEDRAW SECONDARY REACTOR

(51) International classification :C07C
(31) Priority Document No :61/299,453
(32) Priority Date :29/01/2010
(33) Name of priority country :U.S.A.
(86) International Application No :PCT/US2010/059626
Filing Date :09/12/2010
(87) International Publication No :WO 2011/093948
(61) Patent of Addition to Application Number :NA
Filing Date :NA
(62) Divisional to Application Number :NA
Filing Date :NA

(71)**Name of Applicant :**
1)GRUPO PETROTEMEX S.A. DE C.V.
Address of Applicant :Ricardo Margain No. 444 Torre sur Piso 16 CoI. Valle del Campestre San Pedro Garza Garcia Nuevo Leon 66265 Mexico Mexico
(72)**Name of Inventor :**
1)ASHFAQ SHAIKH
2)ALAN GEORGE WONDERS
3)DAVID LANGE

(57) Abstract :
Disclosed are process and apparatus for vertical splitting of the oxygen supply to a post-oxidation reactor. Further disclosed are process and apparatus for supplying reaction medium to a post-oxidation reactor at a mid-level inlet. Such apparatus and process can assist in reducing oxygen pinch throughout the post-oxidation reactor.

No. of Pages : 54 No. of Claims : 20

(12) PATENT APPLICATION PUBLICATION
(19) INDIA
(22) Date of filing of Application :25/07/2012
(21) Application No.6567/DELNP/2012 A
(43) Publication Date : 23/10/2015

(54) Title of the invention : A METHOD AND ARRANGEMENT FOR PERFORMING LINK AGGREGATION

(51) International classification :H04L12/56
(31) Priority Document No :NA
(32) Priority Date :NA
(33) Name of priority country :NA
(86) International Application No :PCT/SE2010/050221
Filing Date :25/02/2010
(87) International Publication No :WO 2011/105941
(61) Patent of Addition to Application Number :NA
Filing Date :NA
(62) Divisional to Application Number :NA
Filing Date :NA

(71)**Name of Applicant :**
1)TELEFONAKTIEBOLAGET LM ERICSSON (publ)
Address of Applicant :S 164 83 Stockholm Sweden
(72)**Name of Inventor :**
1)THYNI Tomas
2)GOTARE Christian
3)K–LHI Johan
4)WELIN Annikki

(57) Abstract :
A method for performing a link aggregation on a link aggregation group comprising a plurality of transport links for sessions received at a first network node which is connected to a second network node via the link aggregation group. The method which is to be executed in the first network node enables link aggregation optimization for the sessions destined for the second network node by selectively choosing transport link for the sessions on the basis of the load of the transport links. The suggested link aggregation results in a packet load balancing and improved bandwidth utilisation. An arrangement suitable for executing the suggested method is also provided.

No. of Pages : 24 No. of Claims : 15

(12) PATENT APPLICATION PUBLICATION
(19) INDIA
(22) Date of filing of Application :25/07/2012
(21) Application No.6568/DELNP/2012 A
(43) Publication Date : 23/10/2015

(54) Title of the invention : MODULAR DATACENTER ELEMENT AND MODULAR DATACENTER COOLING ELEMENT

(51) International classification :E04H5/02,H05K7/20,G06F1/20
(31) Priority Document No :10152323.1
(32) Priority Date :01/02/2010
(33) Name of priority country :EPO
(86) International Application No :PCT/EP2011/051327
Filing Date :31/01/2011
(87) International Publication No :WO 2011/092333
(61) Patent of Addition to Application Number :NA
Filing Date :NA
(62) Divisional to Application Number :NA
Filing Date :NA

(71)**Name of Applicant :**
1)Dataxenter IP B.V
Address of Applicant :J.W. Lucasweg 35 NL 2031 BE Haarlem Netherlands
2)KGG Dataxenter Holding B.V.
(72)**Name of Inventor :**
1)ZWINKELS Cornelis Albert

(57) Abstract :
Modular datacenter element (100) comprising: a modular space defined by at least a bottom panel (120); and a front wall (110) having substantially the same length as the bottom panel placed substantially vertically on the bottom panel; further comprising a plurality of racks for holding equipment the racks being aligned in an opening in the front wall (110) along the length of the bottom panel (120); wherein a first side of the aligned plurality of racks is spaced away from a first edge along the length of the bottom panel at a distance substantially smaller than the width of the bottom panel thus creating a ledge bottom part (126) between the first edge of the bottom panel and the plurality of racks. By creating a datacenter comprising multiple modular datacenter elements a datacenter with efficient inspection possibilities and efficient air handling is created.

No. of Pages : 47 No. of Claims : 20

(12) PATENT APPLICATION PUBLICATION
(19) INDIA
(22) Date of filing of Application :18/04/2012
(21) Application No.3380/DELNP/2012 A
(43) Publication Date : 23/10/2015

(54) Title of the invention : A POLYMER COMPOSITION AND A POWER CABLE COMPRISING THE POLYMER COMPOSITION

(51) International classification :C08F 10/02
(31) Priority Document No :09175689.0
(32) Priority Date :11/11/2009
(33) Name of priority country :EUROPEAN UNION
(86) International Application No :PCT/EP2010/066711
Filing Date :03/11/2010
(87) International Publication No :WO 2011/057927
(61) Patent of Addition to Application Number :NA
Filing Date :NA
(62) Divisional to Application Number :NA
Filing Date :NA

(71)**Name of Applicant :**
1)BOREALIS AG
Address of Applicant :WAGRAMER STRASSE 17-19, A-1220 VIENNA, AUSTRIA Austria
(72)**Name of Inventor :**
1)NILSSON ULF
2)SMEDBERG, ANNIKA
3)CAMPUS, ALFRED

(57) Abstract :
The invention relates to a crosslinkable and crosslinked polymer composition with improved DC electrical properties and to a cable surrounded by at least one layer comprising the polymer composition.

No. of Pages : 58 No. of Claims : 17

(12) PATENT APPLICATION PUBLICATION
(19) INDIA
(22) Date of filing of Application :08/06/2012
(21) Application No.5113/DELNP/2012 A
(43) Publication Date : 23/10/2015

(54) Title of the invention : URACIL OR THYMINE DERIVATIVE FOR TREATING HEPATITIS C

(51) International classification :C07D 239/22
(31) Priority Document No :61/972,877
(32) Priority Date :17/09/2007
(33) Name of priority country :U.S.A.
(86) International Application No :PCT/US2008/076576
Filing Date :17/09/2008
(87) International Publication No :WO 2009/039127
(61) Patent of Addition to Application Number :NA
Filing Date :NA
(62) Divisional to Application Number :2632/DELNP/2010
Filed on :17/09/2008

(71)**Name of Applicant :**
1)ABBOTT LABORATORIES
Address of Applicant :100 ABBOTT PARK ROAD, ABBOTT PARK, ILLINOIS 60064-6050 USA. U.S.A.
(72)**Name of Inventor :**
1)WAGNER ROLF
2)TUFANO MICHAEL D.
3)STEWART KENT D.
4)ROCKWAY TODD W.
5)RANDOLPH JOHN T.
6)PRATT JOHN K.
7)MOTTER CHRISTOPHER E.
8)MARING CLARENCE J.
9)LONGENECKER KENTON L.
10)LIU YAYA
11)LIU DACHUN
12)KRUEGER ALLAN C.
13)KATI WARREN M.
14)HUTCHINSON DOUGLAS K.
15)HUANG PEGGY P.
16)FLENTGE CHARLES A.
17)DONNER PAMELA L.
18)DEGOEY DAVID A.
19)BETEBENNER DAVID A.
20)BARNES DAVID M.
21)CHEN SHUANG
22)FRANCZYK II THADDEUS S.
23)GAO YI
24)HAIGHT ANTHONY R.
25)HENGEVELD JOHN E.
26)HENRY RODGER F.
27)KOTECKI BRIAN J.
28)LOU XIAOCHUN
29)SARRIS KATHY
30)ZHANG GEOFF G.Z.
31)NA

(57) Abstract :
Present application relates to the compounds of formula I useful to treat hepatitis C (HCV) infections. In the structure of the disclosed compounds is the uracil or thymine derivative linked via a phenylene into either fused 2- ring cyclic system (R6) or alternatively via additional two-atom linker (L) to a 5-6 membered monocycle (R6). Application further discloses polymorphs I and pseudopolymorphs of two specific compounds: N-(6(3-t-butyl-5-(2>4- dioxo-3,4-dihydropyrimidin-1 (2H)- y!)2-methoxy-pheny1)naphthalen-2-yl)methanesulfonamide and (E)-N-(4(3-t- butyl-5-(2,4-dioxo-3)4-dihydropyrimidin-1 (2H)-yl)2-method-styryl-phemyl)methanesulfonamide.

No. of Pages : 411 No. of Claims : 61

(12) PATENT APPLICATION PUBLICATION
(19) INDIA
(22) Date of filing of Application :25/07/2012
(21) Application No.6570/DELNP/2012 A
(43) Publication Date : 23/10/2015

(54) Title of the invention : METHODS AND COMPOSITIONS FOR ALTERING TEMPERATURE SENSING IN EUKARYOTIC ORGANISMS

(51) International classification	:C07K14/415,C12N15/82,A01H5/00
(31) Priority Document No	:1000184.0
(32) Priority Date	:07/01/2010
(33) Name of priority country	:U.K.
(86) International Application No	:PCT/GB2010/050956
Filing Date	:08/06/2010
(87) International Publication No	:WO 2011/083290
(61) Patent of Addition to Application Number	:NA
Filing Date	:NA
(62) Divisional to Application Number	:NA
Filing Date	:NA

(71)**Name of Applicant :**
1)PLANT BIOSCIENCE LIMITED
Address of Applicant :Norwich Research Park Colney Lane Norwich Norfolk NR4 7UH U.K.
(72)**Name of Inventor :**
1)WIGGE Philip
2)KUMAR Vinod

(57) Abstract :
H2A.Z containing nucleosomes mediate the thermosensory response in plants and other eukaryotes and modifications to H2A.Z alter such responses.

No. of Pages : 107 No. of Claims : 42

(12) PATENT APPLICATION PUBLICATION
(21) Application No.6571/DELNP/2012 A
(19) INDIA
(22) Date of filing of Application :25/07/2012
(43) Publication Date : 23/10/2015

(54) Title of the invention : METHODS AND KITS FOR DETECTING RISK FACTORS FOR DEVELOPMENT OF JAW OSTEONECROSIS AND METHODS OF TREATMENT THEREOF

(51) International classification :C12Q1/68,C12N15/12
(31) Priority Document No :61/292730
(32) Priority Date :06/01/2010
(33) Name of priority country :U.S.A.
(86) International Application No :PCT/US2010/060139
Filing Date :13/12/2010
(87) International Publication No :WO 2011/084387
(61) Patent of Addition to Application Number :NA
Filing Date :NA
(62) Divisional to Application Number :NA
Filing Date :NA

(71)**Name of Applicant :**
1)UNIVERSITY OF FLORIDA RESEARCH FOUNDATION INC.
Address of Applicant :223 Grinter Hall Gainesville FL 32611 U.S.A.
(72)**Name of Inventor :**
1)KATZ Joseph
2)LANGAEE Taimour Y.

(57) Abstract :
Methods of and kits for determining the pharmacogenetic pharmacokinetic and cellular basis of bisphosphonate induced osteonecrosis of the jaw (BONJ) involve associating particular proteins and particular single nucleotide polymorphisms with a risk for developing BONJ after receiving bisphosphonate treatment. Methods and kits for identifying the genetic basis for a patient s predisposition to BONJ and methods of identifying patients who are prone to develop BONJ following bisphosphonate administration provide for the development of a tool for physicians to prescribe treatment protocols for BONJ patients based on the patients genomes (personal/tailored medicine). A haplotype tagging SNP approach was used to analyze candidate genes involved in bone absorption and destruction and to examine the influence of genetic variants on the susceptibility of BONJ. Bone biomarkers of BONJ were examined using molecular cell techniques. The methods described herein can be used to identify differences in how patients are genetically predisposed to BONJ as well as genetic differences amongst patients that account for differences in how these patients clear bisphosphonate s from their systems. Determining such genetic differences provides for improved monitoring of the drugs used to treat BONJ improved prevention of BONJ and optimized treatment for patients having BONJ or predisposed to BONJ.

No. of Pages : 62 No. of Claims : 29

(12) PATENT APPLICATION PUBLICATION
(21) Application No.6572/DELNP/2012 A
(19) INDIA
(22) Date of filing of Application :25/07/2012
(43) Publication Date : 23/10/2015

(54) Title of the invention : EFFICIENT METHOD FOR COLLECTION OF PLATINUM GROUP ELEMENT FROM COPPER IRON SCRAP

(51) International classification :C22B11/02,C22B7/00,C22B9/02
(31) Priority Document No :2010011022
(32) Priority Date :21/01/2010
(33) Name of priority country :Japan
(86) International Application No :PCT/JP2011/050940
Filing Date :20/01/2011
(87) International Publication No :WO 2011/090102
(61) Patent of Addition to Application Number :NA
Filing Date :NA
(62) Divisional to Application Number :NA
Filing Date :NA

(71)**Name of Applicant :**
1)SUMITOMO METAL INDUSTRIES LTD.
Address of Applicant :5 33 Kitahama 4 chome Chuo ku Osaka shi Osaka 5410041 Japan
(72)**Name of Inventor :**
1)NAKAMOTO Masashi
2)YAMAMOTO Takaiku

(57) Abstract :
Disclosed is a means for efficiently collecting a platinum group element by efficiently enriching the platinum group element in a molten copper phase produced from a copper iron scrap containing the platinum group element. Specifically disclosed is a method comprising: melting a copper iron scrap containing a platinum group element to produce a molten material; separating the molten material into two phases i.e. a molten copper phase containing at least one rare metal selected from the group consisting of Nd Pr and Dy and a molten iron phase having a carbon concentration of 1 mass% or more wherein carbon contained in the molten iron phase is derived from a carbon source contained in the molten material; isolating the two phases from each other and collecting the molten copper phase; and separating and collecting the platinum group element dissolved in the molten copper phase from the molten copper phase. The copper iron scrap may contain the rare metal. Alternatively a member containing the rare metal may be added to the molten material. It is preferred that the total concentration of the rare metal contained in the molten copper phase be 1 mass% or more.

Fig. 1

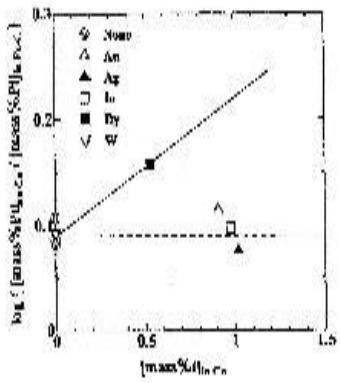

No. of Pages : 25 No. of Claims : 5

(12) PATENT APPLICATION PUBLICATION
(19) INDIA
(22) Date of filing of Application :18/04/2012
(21) Application No.3364/DELNP/2012 A
(43) Publication Date : 23/10/2015

(54) Title of the invention : HEATING, SHAKING, AND MAGNETIZING APPARATUS AND METHOD OF OPERATING THE SAME

(51) International classification :B01L 7/00
(31) Priority Document No :61/252,390
(32) Priority Date :16/10/2009
(33) Name of priority country :U.S.A.
(86) International Application No :PCT/US2010/052799
Filing Date :15/10/2010
(87) International Publication No :WO 2011/047233
(61) Patent of Addition to Application Number :NA
Filing Date :NA
(62) Divisional to Application Number :NA
Filing Date :NA

(71)**Name of Applicant :**
1)PROMEGA CORPORATION
Address of Applicant :2800 WOODS HOLLOW ROAD MADISON, WI 53711 UNITED STATES OF AMERICA U.S.A.
(72)**Name of Inventor :**
1)BONK, AARON
2)COWAN, CRISTOPHER
3)KRUEGER, JULIA
4)KRUEGER, STEVE

(57) Abstract :
An apparatus for processing a liquid sample in a sample tube. The apparatus includes a base, a receptacle for receiving a sample tube, and a heating portion coupled to the base to selectively apply heat to the receptacle. A shaking portion is coupled to the base and supports the receptacle. The shaking portion selectively agitates the receptacle with respect to the base. A magnetizing portion is coupled to the base and movable to selectively change a magnetic field with respect to the receptacle.

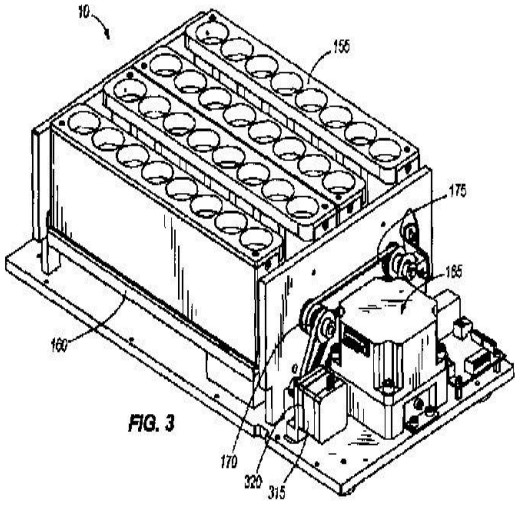

FIG. 3

No. of Pages : 27 No. of Claims : 15

(12) PATENT APPLICATION PUBLICATION
(19) INDIA
(22) Date of filing of Application :18/04/2012
(21) Application No.3365/DELNP/2012 A
(43) Publication Date : 23/10/2015

(54) Title of the invention : ENERGY RECOVERY FROM GASES IN A BLAST FURNACE PLANT

(51) International classification :F27B 1/10
(31) Priority Document No :91617
(32) Priority Date :19/10/2009
(33) Name of priority country :Luxembourg
(86) International Application No :PCT/EP2010/065621
Filing Date :18/10/2010
(87) International Publication No :WO 2011/048405
(61) Patent of Addition to Application Number :NA
Filing Date :NA
(62) Divisional to Application Number :NA
Filing Date :NA

(71)**Name of Applicant :**
1)PAUL, WURTH S.A.
Address of Applicant :32, RUE D'ALSACE, L-1122 LUXEMBOURG, LUXEMBOURG Luxembourg
(72)**Name of Inventor :**
1)SUVOROV, MIKAIL
2)FABIOLA, FABIO
3)CASTAGNOLA, CRISTIANO
4)CROSA, CARLO

(57) Abstract :
There is presented a process for recovering energy from blast furnace top gas in a blast furnace plant with top gas recovery turbine system, wherein the blast furnace plant comprises at least one cold blast compressor (12) associated with at least one blast air preheater (14), and wherein a pressurized top gas stream released by the blast furnace (10) is passed through a top gas cleaning unit (24) and fed to an expansion turbine (20) coupled to a load (34). According to the process, heat is extracted from the pressurized cold blast and the extracted heat is transferred, at least in part, to the cleaned top gas upstream of the expansion turbine.

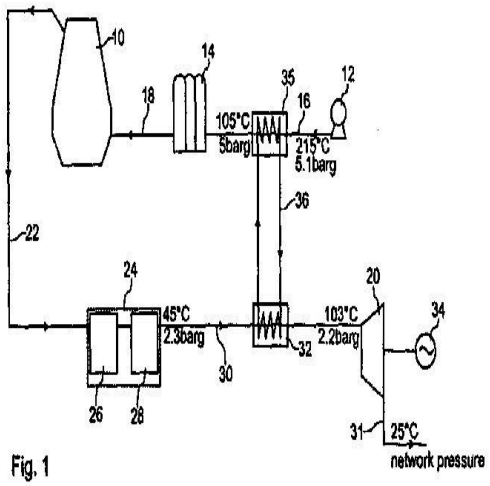

Fig. 1

No. of Pages : 17 No. of Claims : 11

(12) PATENT APPLICATION PUBLICATION
(19) INDIA
(22) Date of filing of Application :18/04/2012

(21) Application No.3366/DELNP/2012 A
(43) Publication Date : 23/10/2015

(54) Title of the invention : METHOD FOR THE OPERATION AND CONTROL OF GAS FILLING

(51) International classification :F17C 7/02
(31) Priority Document No :2009 3181
(32) Priority Date :21/10/2009
(33) Name of priority country :Norway
(86) International Application No :PCT/NO2010/000375
Filing Date :21/10/2010
(87) International Publication No :WO 2011/049466
(61) Patent of Addition to Application Number :NA
Filing Date :NA
(62) Divisional to Application Number :NA
Filing Date :NA

(71)**Name of Applicant :**
1)NEL HYDROGEN AS
Address of Applicant :P.O. BOX 24, N-3671, NOTODDEN, NORWAY Norway
(72)**Name of Inventor :**
1)KITTILSEN, PAL
2)MIDTBOEN, PAL
3)FJALESTAD, KJETIL

(57) Abstract :
A method for the operation and control of gas filling from a filling station to a receiver is comprising actively controlling essential filling variables within the receiver such as temperature, pressure, and density of the gas; continuously updating estimates of the filling variables based on filling station side measurements interpreted using physical and thermodynamic relations as to make the variables available even when the receiver is not communicating with the filling station in so-called non-communication fueling; and continuously updating the estimated capacity of the receiver based on station side measurements in a non-communication fueling.

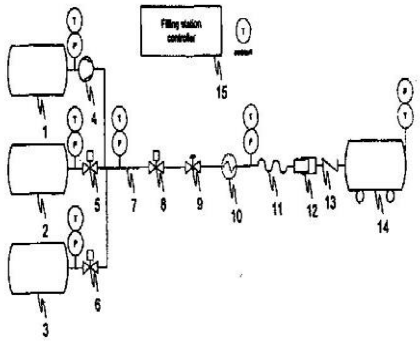

Figure 1

No. of Pages : 22 No. of Claims : 11

(12) PATENT APPLICATION PUBLICATION
(21) Application No.5217/DELNP/2012 A
(19) INDIA
(22) Date of filing of Application :13/06/2012
(43) Publication Date : 23/10/2015

(54) Title of the invention : ELECTRICAL SIGNAL PACKET ROUTING.

(51) International classification :H04Q 11/00
(31) Priority Document No :09180618.2
(32) Priority Date :23/12/2009
(33) Name of priority country :EPO
(86) International Application No :PCT/EP2010/050519
Filing Date :18/01/2010
(87) International Publication No :WO 2011/076442
(61) Patent of Addition to Application Number :NA
Filing Date :NA
(62) Divisional to Application Number :NA
Filing Date :NA

(71)**Name of Applicant :**
1)TELEFONAKTIEBOLAGET LM ERICSSON (PUBL)
Address of Applicant :SE-164 83 STOCKHOLM (SE) Sweden
(72)**Name of Inventor :**
1)TEST, FRANCESCO
2)D'ERRICO, ANTONIO

(57) Abstract :
A packet switch 40 comprises wavelength tuneable optical transmitters 12, an optical switch fabric 42, optical detectors 30 and a controller 32. The transmitters 12 are arranged to receive at least one electrical signal packet to be switched and convert it into a corresponding optical signal packet at an input wavelength. The optical switch fabric 42 comprises an ingress stage 44 comprising wavelength selective routers 46 and an egress stage 50 comprising wavelength selective routers 54 and tuneable wavelength converters a 26 arranged to receive an optical signal at the input wavelength and to output an optical signal at an output wavelength. The controller 32 is arranged to set the input wavelength of a transmitter 12 and the output wavelength of a wavelength converter to configure a ! path across the switch fabric 42 connecting the transmitter 12 to a detector 30. A communications network router 90 comprises an input module 92, a packet switch 40, an output module 96 and a scheduler 94.

No. of Pages : 34 No. of Claims : 13

(12) PATENT APPLICATION PUBLICATION
(19) INDIA
(22) Date of filing of Application :25/07/2012
(21) Application No.6580/DELNP/2012 A
(43) Publication Date : 23/10/2015

(54) Title of the invention : NANOCOMPOSITES WITH IMPROVED HOMOGENEITY

(51) International classification :C08J3/20,C08J3/205,C08J5/00
(31) Priority Document No :10155175.2
(32) Priority Date :02/03/2010
(33) Name of priority country :EPO
(86) International Application No :PCT/EP2011/053065
Filing Date :02/03/2011
(87) International Publication No :WO 2011/107495
(61) Patent of Addition to Application Number :NA
Filing Date :NA
(62) Divisional to Application Number :NA
Filing Date :NA

(71)**Name of Applicant :**
1)TOTAL PETROCHEMICALS RESEARCH FELUY
Address of Applicant :Zone Industrielle C B 7181 Seneffe (Feluy) Belgium
(72)**Name of Inventor :**
1)GAUCHET Sverine
2)MICHEL Jacques
3)LHOST Olivier
4)NAVEZ Pascal
5)EVERAERT Jacques
6)LUIJKX Romain
7)DUPIRE Marc

(57) Abstract :
The present invention relates to nanocomposites comprising nanoparticles and a thermoplastic polymer composition said nanocomposite being characterized by improved homogeneity and in consequence by improved properties. Further the present invention relates to a process for the production of such nanocomposites by first dispersing the nanoparticles in a dispersant and subsequent blending with a thermoplastic polymer composition.

No. of Pages : 39 No. of Claims : 15

(12) PATENT APPLICATION PUBLICATION
(21) Application No.5236/DELNP/2012 A
(19) INDIA
(22) Date of filing of Application :13/06/2012
(43) Publication Date : 23/10/2015

(54) Title of the invention : 'SHIFT CONTROL SYSTEM FOR INDUSTRIAL VEHICLE

(51) International classification :F16H 61/02
(31) Priority Document No :2009-283139
(32) Priority Date :14/12/2009
(33) Name of priority country :Japan
(86) International Application No :PCT/JP2010/072498
Filing Date :14/12/2010
(87) International Publication No :WO 2011/074583
(61) Patent of Addition to Application Number :NA
Filing Date :NA
(62) Divisional to Application Number :NA
Filing Date :NA

(71)**Name of Applicant :**
1)HITACHI CONSTRUCTION MACHINERY CO., LTD.
Address of Applicant :5-1, KORAKU 2-CHOME, BUNKYO-KU, TOKYO 112-8563, JAPAN Japan
(72)**Name of Inventor :**
1)HYODO KOJI
2)SHIMAZU ATSUSHI
3)OOUCHI HIROFUMI
4)AOKI TADAYOSHI

(57) Abstract :
A shift control system for industrial vehicle includes: a vehkle speed device that detccts a vehicle speed of an industrial vehicle; a transmission device that 5 shifts up and shifts down a speed stage of a transmission; a shift control device that pennits shift up by the transmission device when a vehicle speed detected by the vehicle speed detection device becomes equal to or greater than a shift up permission vehicle speed; a height position detection device that detects a height position of a working machine device; a fowardhackward switch device that switches the industrial vehicle 10 between forward travel and backward travel; and a shift up control switch selection device that switches between normal controI, in which shift up is performed by the transmission device when the vehicle speed becomes equal to or greater than the shift up permission vehicle speed, and delay control, in which shift up timing is dclayed with respect to the normal control.

No. of Pages : 27 No. of Claims : 5

(12) PATENT APPLICATION PUBLICATION
(19) INDIA
(22) Date of filing of Application :13/06/2012
(21) Application No.5237/DELNP/2012 A
(43) Publication Date : 23/10/2015

(54) Title of the invention : PCSK9 ANTAGONISTS

(51) International classification :C07K 16/40
(31) Priority Document No :61/285,942
(32) Priority Date :11/12/2009
(33) Name of priority country :U.S.A.
(86) International Application No :PCT/US2010/059959
Filing Date :10/12/2010
(87) International Publication No :WO 2011/072263
(61) Patent of Addition to Application Number :NA
Filing Date :NA
(62) Divisional to Application Number :NA
Filing Date :NA

(71)**Name of Applicant :**
1)IRM LLC
Address of Applicant :131 FRONT STREET, HAMILTON HM LX, BERMUDA. Bermuda
2)NOVARTIS AG
(72)**Name of Inventor :**
1)RUE SARAH
2)COHEN STEVEN B.
3)LI JUN
4)YOWE DAVID

(57) Abstract :
The present disclosure provides antibody antagonists against proprotein convertase subtilisinlkexin type 9a (PCSKS) and methods of using such antibodies.

No. of Pages : 125 No. of Claims : 50

(12) PATENT APPLICATION PUBLICATION
(19) INDIA
(22) Date of filing of Application :13/06/2012
(21) Application No.5239/DELNP/2012 A
(43) Publication Date : 23/10/2015

(54) Title of the invention : 'CONFIGURABLE PORT FITMENT, KIT, AND RELATED METHODS'

(51) International classification :B65D 33/38
(31) Priority Document No :61/267,263
(32) Priority Date :07/12/2009
(33) Name of priority country :U.S.A.
(86) International Application No :PCT/US2010/059253
Filing Date :07/12/2010
(87) International Publication No :WO 2011/071897
(61) Patent of Addition to Application Number :NA
Filing Date :NA
(62) Divisional to Application Number :NA
Filing Date :NA

(71)**Name of Applicant :**
1)ADVANCED TECHNOLOGY MATERIALS, INC.
Address of Applicant :7 COMMERCE DRIVE, DANBURY, CT 06810, UNITED STATES OF AMERICA U.S.A.
(72)**Name of Inventor :**
1)KUSZ, MATTHEW
2)PETHE, VISHWAS

(57) Abstract :
A configurable port fitment includes an adapter for forming a locking engagement with a connector associated with a vessel. A kit and related methods may use the configurable port fitment.

No. of Pages : 50 No. of Claims : 62

(12) PATENT APPLICATION PUBLICATION
(19) INDIA
(22) Date of filing of Application :25/07/2012
(21) Application No.6586/DELNP/2012 A
(43) Publication Date : 23/10/2015

(54) Title of the invention : IMMERSION TYPE MEMBRANE MODULE UNIT AND MEMBRANE BIOREACTOR DEVICE

(51) International classification :B01D65/02,B01D63/02,B01D63/08
(31) Priority Document No :2010150586
(32) Priority Date :30/06/2010
(33) Name of priority country :Japan
(86) International Application No :PCT/JP2011/064900
Filing Date :29/06/2011
(87) International Publication No :WO 2012/002427
(61) Patent of Addition to Application Number :NA
Filing Date :NA
(62) Divisional to Application Number :NA
Filing Date :NA

(71)**Name of Applicant :**
1)SUMITOMO ELECTRIC FINE POLYMER INC.
Address of Applicant :950 Asashiro nishi 1 chome Kumatori cho Sennan gun Osaka 5900458 Japan
2)NATIONAL UNIVERSITY CORPORATION HOKKAIDO UNIVERSITY
(72)**Name of Inventor :**
1)MORITA Toru
2)WATANABE Yoshimasa

(57) Abstract :
An immersion type membrane module unit comprises: immersion type membrane modules (2) for membrane bioreactor filtration; extending walls (27) which extend from the lower ends of the membrane modules and surround spaces under the membrane modules (2); and air diffusion devices (8) for membrane aeration which are arranged in lower portions within the spaces or in the vicinity of the points under the spaces and have a plurality of air diffusion holes arrayed planarly. Bubbles from the air diffusion holes are guided by the extending walls (27) to the voids among the membrane modules (2).

No. of Pages : 34 No. of Claims : 10

(12) PATENT APPLICATION PUBLICATION
(19) INDIA
(22) Date of filing of Application :25/07/2012
(21) Application No.6587/DELNP/2012 A
(43) Publication Date : 23/10/2015

(54) Title of the invention : APIXABAN FORMULATIONS

(51) International classification :A61K9/20,A61K31/437,A61P7/02
(31) Priority Document No :61/308056
(32) Priority Date :25/02/2010
(33) Name of priority country :U.S.A.
(86) International Application No :PCT/US2011/025994
Filing Date :24/02/2011
(87) International Publication No :WO 2011/106478
(61) Patent of Addition to Application Number :NA
Filing Date :NA
(62) Divisional to Application Number :NA
Filing Date :NA

(71)**Name of Applicant :**
1)BRISTOL MYERS SQUIBB COMPANY
Address of Applicant :Rt. 206 & Province Line Road Princeton NJ 08543 4000 U.S.A.
2)PFIZER INC.
(72)**Name of Inventor :**
1)PATEL Jatin
2)FROST Charles
3)JIA Jingpin
4)VEMA VARAPU Chandra

(57) Abstract :
Compositions comprising crystalline apixaban particles having a D equal to or less than 89 µm and a pharmaceutically acceptable carrier are substantially bioequivalent and can be used to for the treatment and/or prophylaxis of thromboembolic disorders.

No. of Pages : 22 No. of Claims : 18

(12) PATENT APPLICATION PUBLICATION
(19) INDIA
(22) Date of filing of Application :25/07/2012
(21) Application No.6588/DELNP/2012 A
(43) Publication Date : 23/10/2015

(54) Title of the invention : METHODS AND COMPOUNDS FOR MUSCLE GROWTH

(51) International classification :G01N33/68
(31) Priority Document No :61/303027
(32) Priority Date :10/02/2010
(33) Name of priority country :U.S.A.
(86) International Application No :PCT/EP2011/051825
Filing Date :08/02/2011
(87) International Publication No :WO 2011/098449
(61) Patent of Addition to Application Number :NA
Filing Date :NA
(62) Divisional to Application Number :NA
Filing Date :NA

(71)**Name of Applicant :**
1)NOVARTIS AG
Address of Applicant :Lichtstrasse 35 CH 4056 Basel Switzerland
(72)**Name of Inventor :**
1)GLASS David
2)SHI Jun

(57) Abstract :
The disclosure relates to treating muscle wasting associated disorders in a patient using a therapeutically effective amount of an antagonist of Fbxo40 wherein the antagonist reduces the expression level or activity of Fbxo40. The Fbxo40 antagonist increases muscle mass or prevents limits or reduces muscle mass loss in the patient. The Fbxo40 antagonist can be a low molecular weight (LMW) compound a protein an antibody or an inhibitory nucleic acid such as a siRNA. The disclosure also relates to methods of screening for antagonists of Fbxo40 and methods of diagnosing or monitoring levels of muscle mass maintenance loss or increase.

No. of Pages : 107 No. of Claims : 23

(12) PATENT APPLICATION PUBLICATION
(21) Application No.5234/DELNP/2012 A
(19) INDIA
(22) Date of filing of Application :13/06/2012
(43) Publication Date : 23/10/2015

(54) Title of the invention : TIRE

(51) International classification :B60C 13/02
(31) Priority Document No :2009-264285
(32) Priority Date :19/11/2009
(33) Name of priority country :Japan
(86) International Application No :PCT/JP2010/070612
Filing Date :18/11/2010
(87) International Publication No :WO 2011/062241
(61) Patent of Addition to Application Number :NA
Filing Date :NA
(62) Divisional to Application Number :NA
Filing Date :NA

(71)**Name of Applicant :**
1)BRIDGESTONE CORPORATION
Address of Applicant :10-1, KYOBASHI 1-CHOME, CHUO-KU, TOKYO 104-8340, JAPAN Japan
(72)**Name of Inventor :**
1)IWABUCHI SOTARO

(57) Abstract :
A pneumatic tire is provided with a decoration portion at a tire side portion. The 1 3 JUN 2012 decoration portion includes decoration elements, which include ridges, and gullies, which are inclined with respect to the tire circumferential direction and divide the decoration elements into at least two regions. Thus, the gullies make the ridges non- continuous in the tire circumferential direction. The ridges include first ridges and second ridges that are smaller than the first ridges in one or both of height and width. At least some of the first ridges are inclined with respect to the tire circumferential direction and are adjacent to one another. Thus, the gullies are formed between the adjacent first ridges.

No. of Pages : 75 No. of Claims : 21

(12) PATENT APPLICATION PUBLICATION
(21) Application No.6575/DELNP/2012 A
(19) INDIA
(22) Date of filing of Application :25/07/2012
(43) Publication Date : 23/10/2015

(54) Title of the invention : OPTICAL SEMICONDUCTOR, OPTICAL SEMICONDUCTOR ELECTRODE USING SAME, PHOTOELECTROCHEMICAL CELL, AND ENERGY SYSTEM •

(51) International classification :C07C
(31) Priority Document No :2010-047426
(32) Priority Date :04/03/2010
(33) Name of priority country :Japan
(86) International Application No :PCT/JP2011/001240
Filing Date :03/03/2011
(87) International Publication No :WO 2011/108271
(61) Patent of Addition to Application Number :NA
Filing Date :NA
(62) Divisional to Application Number :NA
Filing Date :NA

(71)**Name of Applicant :**
1)PANASONIC CORPORATION
Address of Applicant :1006 Oaza Kadoma Kadoma-shi Osaka 571-8501 Japan Japan
(72)**Name of Inventor :**
1)NOMURA Takaiki
2)SUZUKI Takahiro
3)MIYATA Nobuhiro
4)HATO Kazuhito

(57) Abstract :
The optical semiconductor of the present invention is an optical semiconductor containing In Ga Zn 0 and N anti has a composition in which a part of oxygen (0) is substituted by nitrogen (N) in a general formula: ....

No. of Pages : 45 No. of Claims : 15

(12) PATENT APPLICATION PUBLICATION
(21) Application No.6577/DELNP/2012 A
(19) INDIA
(22) Date of filing of Application :25/07/2012
(43) Publication Date : 23/10/2015

(54) Title of the invention : OPTIMIZED FAST RE-ROUTE IN MPLS RING TOPOLOGIES

(51) International classification :H04L12/56,H04L12/437
(31) Priority Document No :12/710244
(32) Priority Date :22/02/2010
(33) Name of priority country :U.S.A.
(86) International Application No :PCT/IB2011/050351
Filing Date :27/01/2011
(87) International Publication No :WO 2011/101758
(61) Patent of Addition to Application Number :NA
Filing Date :NA
(62) Divisional to Application Number :NA
Filing Date :NA

(71)**Name of Applicant :**
1)TELEFONAKTIEBOLAGET L M ERICSSON (PUBL)
Address of Applicant :S 164 83 Stockholm Sweden
(72)**Name of Inventor :**
1)KINI Sriganesh
2)RAPOPORT Marc
3)LIU Hua Autum

(57) Abstract :
A method performed on a network element employing Multi protocol Label Switching (MPLS) to optimize bandwidth in a ring topology network including a back up Label Switch Path (LSP) for a protected LSP by re routing traffic onto the back up LSP to avoid shared links between the protected LSP and back up LSP including receiving a first labeled packet from another label switch router (LSR) in the back up LSP the first labeled packet indicating that a protection switch of data is to be performed from the protected LSP to the back up LSP determining whether a shared link in the ring topology network exists between the protected LSP and the back up LSP rerouting traffic for the protected LSP onto an optimized back up LSP to remove the shared link receiving a second labeled packet indicating that a protection switch of data is to be performed and restoring routing of the traffic onto the protected LSP in response to receiving the second labeled packet.

No. of Pages : 28 No. of Claims : 18

(12) PATENT APPLICATION PUBLICATION
(19) INDIA
(22) Date of filing of Application :25/07/2012
(21) Application No.6578/DELNP/2012 A
(43) Publication Date : 23/10/2015

(54) Title of the invention : METHODS AND ARRANGEMENTS IN A CELLULAR COMMUNICATION NETWORK

(51) International classification :H04W16/14,H04W76/02
(31) Priority Document No :NA
(32) Priority Date :NA
(33) Name of priority country :NA
(86) International Application No :PCT/SE2010/050125
Filing Date :02/02/2010
(87) International Publication No :WO 2011/096855
(61) Patent of Addition to Application Number :NA
Filing Date :NA
(62) Divisional to Application Number :NA
Filing Date :NA

(71)**Name of Applicant :**
1)TELEFONAKTIEBOLAGET L M ERICSSON (PUBL)
Address of Applicant :S 164 83 Stockholm Sweden
(72)**Name of Inventor :**
1)FODOR Gabor
2)HEDBERG Tomas

(57) Abstract :
The present invention relates to methods and arrangements for resolving radio resource conflicts occurring in radio networks supporting both local ad hoc communication and cellular communication. The conflicts are resolved by informing the cellular network about radio resource management restrictions due to the local ad hoc communication needs and resources that are reserved for local ad hoc communications.

No. of Pages : 37 No. of Claims : 35

(12) PATENT APPLICATION PUBLICATION
(19) INDIA
(22) Date of filing of Application :25/07/2012
(21) Application No.6579/DELNP/2012 A
(43) Publication Date : 23/10/2015

(54) Title of the invention : INJECTION STRETCH BLOW MOULDING CONTAINERS PREPARED WITH POLYETHYLENE

(51) International classification :C08F10/02,C08F2/34
(31) Priority Document No :10151973.4
(32) Priority Date :28/01/2010
(33) Name of priority country :EPO
(86) International Application No :PCT/EP2011/051255
Filing Date :28/01/2011
(87) International Publication No :WO 2011/092306
(61) Patent of Addition to Application Number :NA
Filing Date :NA
(62) Divisional to Application Number :NA
Filing Date :NA

(71)**Name of Applicant :**
1)TOTAL PETROCHEMICALS RESEARCH FELUY
Address of Applicant :Zone Industrielle C B 7181 Seneffe Belgium
(72)**Name of Inventor :**
1)BOISSIERE Jean Marie
2)VANTOMME Aurlien
3)BELLOIR Pierre
4)VAN SINOY Alain

(57) Abstract :
An injection stretch blow moulded container prepared essentially from polyethylene prepared in the presence of a chromium based catalyst system the polyethylene having a density of from 0.950 to 0.965 g/cm measured following the method of standard test ASTM 1505 at a temperature of 23 °C a melt index Ml of from 0.5 to 5 g/10min measured following the method of standard test ASTM D 1238 at a temperature of 190 °C and under a load of 2.16 kg and a high load melt index HLMI of from 40 to 150 g/10min measured following the method of standard test ASTM D 1238 at a temperature of 190 °C and under a load of 21.6 kg the container weighing from 10 to 150g per dm of volume when the container has a volume of less than 300 cm the container weighing from 10 to 80g per dm of volume when the container has a volume of at least 300 cm.

No. of Pages : 33 No. of Claims : 15

(12) PATENT APPLICATION PUBLICATION
(19) INDIA
(22) Date of filing of Application :25/07/2012
(21) Application No.6581/DELNP/2012 A
(43) Publication Date : 23/10/2015

(54) Title of the invention : PHARMACEUTICAL COMPOSITION FOR TREATMENT OF INCREASED INTRAOCULAR PRESSURE

(51) International classification :A61K9/00,A61K9/08,A61K9/10
(31) Priority Document No :10002800.0
(32) Priority Date :17/03/2010
(33) Name of priority country :EPO
(86) International Application No :PCT/EP2011/053949
Filing Date :16/03/2011
(87) International Publication No:WO 2011/113855
(61) Patent of Addition to Application Number :NA
Filing Date :NA
(62) Divisional to Application Number :NA
Filing Date :NA

(71)**Name of Applicant :**
1)NOVALIQ GMBH
Address of Applicant :Im Neuenheimer Feld 515 69120 Heidelberg Germany
(72)**Name of Inventor :**
1)THEISINGER Bastian
2)THEISINGER Sonja
3)GNTHER Bernhard

(57) Abstract :
The invention provides novel pharmaceutical compositions for the treatment of increased intraocular pressure based on semifluorinated alkanes which are useful as carriers for a broad range of active ingredients. Preferred active ingredients include poorly water soluble prostaglandin analogues. The compositions can be administered topically into the eye. The invention further provides kits comprising such compositions.

No. of Pages : 26 No. of Claims : 15

(12) PATENT APPLICATION PUBLICATION
(21) Application No.6582/DELNP/2012 A
(19) INDIA
(22) Date of filing of Application :25/07/2012
(43) Publication Date : 23/10/2015

(54) Title of the invention : METHOD OF FEEDING THREAD TO A SEWING MACHINE AND SEWING MACHINE THREAD FEED

(51) International classification :D05B59/00,D02G1/00
(31) Priority Document No :1001367.0
(32) Priority Date :28/01/2010
(33) Name of priority country :U.K.
(86) International Application No :PCT/GB2011/000103
Filing Date :28/01/2011
(87) International Publication No :WO 2011/092466
(61) Patent of Addition to Application Number :NA
Filing Date :NA
(62) Divisional to Application Number :NA
Filing Date :NA

(71)**Name of Applicant :**
1)COATS PLC
Address of Applicant :1 The Square Stockley Park Uxbridge Middlesex UB11 1TD U.K.
(72)**Name of Inventor :**
1)GOODWIN David

(57) Abstract :
A sewing machine thread feed for a supplying sewing thread to a sewing machine the sewing thread including a low melting point filament and a textile filament the feed comprising: a guide mechanism for guiding sewing thread to a needle of the sewing machine; first and second spools carrying first and second filaments respectively one of the spools carrying a low melt filament and the other carrying a textile filament; first and second retention mechanisms for retaining the first and second spools respectively in position against force applied to them when filament is drawn off; the first and second filaments run from the first and second spools respectively to the guide mechanism; wherein the first filament runs from the first spool through the centre of the second spool so that the action of the second filament when being drawn off the second spool causes inter winding of the first and second filaments to create composite sewing thread.

No. of Pages : 19 No. of Claims : 25

(12) PATENT APPLICATION PUBLICATION
(19) INDIA
(22) Date of filing of Application :25/07/2012
(21) Application No.6583/DELNP/2012 A
(43) Publication Date : 23/10/2015

(54) Title of the invention : HIGH-TEMPERATURE FLEXIBLE COMPOSITE HOSE

(51) International classification :F16L11/00
(31) Priority Document No :61/346658
(32) Priority Date :20/05/2010
(33) Name of priority country :U.S.A.
(86) International Application No :PCT/US2011/037300
Filing Date :20/05/2011
(87) International Publication No :WO 2011/146813
(61) Patent of Addition to Application Number :NA
Filing Date :NA
(62) Divisional to Application Number :NA
Filing Date :NA

(71)**Name of Applicant :**
1)NOVAFLEX HOSE INC.
Address of Applicant :449 Trollingwood Road Haw River North Carolina 27258 U.S.A.
(72)**Name of Inventor :**
1)DONNELLY Kevin
2)DONNELLY Melinda

(57) Abstract :
A high temperature composite hose (100) allows for the carrying out of high temperature air gases and liquids in a range of 600 to 2000°F. The hose remains flexible at such elevated temperatures and may be used in situations where solid or flexible metal hose was previously used. The hose construction preferably includes a spirally wound inner wire element (10) over which is applied multiple layers (21 23 17) preferably beginning with a layer of heat resistant textile or fabric (21) and ending with a cover layer (17) which serves to provide abrasion and other resistance to the composite hose. A 2nd outer wire element (16) is preferably applied which in connection with the inner wire element 10 serves to sandwich or compress and hold the heat resistant and other hose layers (21 23 17) together.

No. of Pages : 34 No. of Claims : 19

(12) PATENT APPLICATION PUBLICATION
(19) INDIA
(22) Date of filing of Application :25/07/2012
(21) Application No.6584/DELNP/2012 A
(43) Publication Date : 23/10/2015

(54) Title of the invention : A BONE FIXATION SYSTEM

(51) International classification :A61B17/16,A61B17/86,A61B17/88
(31) Priority Document No :61/320883
(32) Priority Date :05/04/2010
(33) Name of priority country :U.S.A.
(86) International Application No :PCT/US2011/030855
Filing Date :01/04/2011
(87) International Publication No :WO 2011/126928
(61) Patent of Addition to Application Number :NA
Filing Date :NA
(62) Divisional to Application Number :NA
Filing Date :NA

(71)**Name of Applicant :**
1)SYNTHES USA LLC
Address of Applicant :1302 Wrights Lane East West Chester PA 19380 U.S.A.
2)SYNTHES GmbH
(72)**Name of Inventor :**
1)NARDINI Reto
2)FRIGG Robert

(57) Abstract :
A bone fixation system is provided. The bone fixation system may include a plate one or more fasteners configured to attach the plate to a target anatomical location such as bone and a surgical device that facilitates the attachment of the plate and the fasteners.

No. of Pages : 31 No. of Claims : 47

(12) PATENT APPLICATION PUBLICATION
(21) Application No.6585/DELNP/2012 A
(19) INDIA
(22) Date of filing of Application :25/07/2012
(43) Publication Date : 23/10/2015

(54) Title of the invention : TORQUE CALCULATION METHOD FOR FOUR-PONT CONTACT BALL BEARING, CALCULATION DEVICE, AND CALCULATION PROGRAM

(51) International classification :F16C19/14,G01M13/04
(31) Priority Document No :2010010259
(32) Priority Date :20/01/2010
(33) Name of priority country :Japan
(86) International Application No :PCT/JP2011/050525
Filing Date :14/01/2011
(87) International Publication No :WO 2011/089977
(61) Patent of Addition to Application Number :NA
Filing Date :NA
(62) Divisional to Application Number :NA
Filing Date :NA

(71)**Name of Applicant :**
1)NTN CORPORATION
Address of Applicant :3 17 Kyomachibori 1 chome Nishi ku Osaka shi Osaka 5500003 Japan
(72)**Name of Inventor :**
1)HORI Michio
2)SAKAGUCHI Tomoya

(57) Abstract :
Provided are a calculation method a calculation device and a calculation program which are capable of obtaining high accuracy torque values by taking into consideration the effect of the fact that contact states are different such an approach being a task unique to a four point contact ball bearing. Said method serves to calculate rotational torque acting between the inner race and the outer race of a four point contact ball bearing and comprises individual torque calculating process (V1) which calculates rotational torque T for individual rolling elements and a sum total calculating process (V2) wherein the sum of the rotational torque T of all rolling elements is obtained and the resulting sum is taken as the rotational torque acting between said inner race and said outer race. In the individual torque calculating process calculation is made using information pertaining to a contact state which is at a level close to either a two point contact state or a four point contact state. As regards this contact state a four point contact ratio C is used which is the ratio of a lower contact pressure to a higher contact pressure said lower contact pressure and said higher contact pressure being the lower and the higher respectively of P and P said P and P each being the maximum contact pressure between the rolling elements and one of the two partial raceway surfaces forming the raceway surface of the inner race or the outer race.

No. of Pages : 60 No. of Claims : 20

(12) PATENT APPLICATION PUBLICATION
(21) Application No.5119/DELNP/2012 A
(19) INDIA
(22) Date of filing of Application :11/06/2012
(43) Publication Date : 23/10/2015

(54) Title of the invention : OPTICAL ARTICLE COMPRISING A TEMPORARY ANTI-FOOGING COATING WITH IMPROVED DURABILITY

(51) International classification :C03C 17/30
(31) Priority Document No :0959685
(32) Priority Date :31/12/2009
(33) Name of priority country :France
(86) International Application No :PCT/FR2010/052895
Filing Date :22/12/2010
(87) International Publication No :WO 2011/080472
(61) Patent of Addition to Application Number :NA
Filing Date :NA
(62) Divisional to Application Number :NA
Filing Date :NA

(71)**Name of Applicant :**
1)SATISLOH AG
Address of Applicant :OF NEUHOFSTRASSE 12, 6340 BAAR, SWITZERLAND Switzerland
(72)**Name of Inventor :**
1)MAMONJY CADET
2)MATHIEU FEUILLADE
3)FRANCIS HENKY

(57) Abstract :
The present invention relates to an optical article comprising a substrate provided with a coating comprising silanol groups on the surface thereof and, directly contacting this coating, an anti-fog coating precursor coating, said precursor coating having a static contact angle with water of more than 10 and of less than 50°, a thickness lower than or equal to 5 nm, and being obtained through the grafting of at least one organosilane compound having a polyoxyalkylene group comprising less than 80 carbon atoms and at least one silicon atom bearing at least one hydrolyzable group. The anti-fog coating precursor is converted into an actual anti-fog coating by applying on the surface thereof a film of a liquid solution comprising at least one surfactant. The anti-fog coating is immediately operational and provides long-lasting effects. No figure.

No. of Pages : 36 No. of Claims : 16

(12) PATENT APPLICATION PUBLICATION
(21) Application No.6597/DELNP/2012 A
(19) INDIA
(22) Date of filing of Application :26/07/2012
(43) Publication Date : 23/10/2015

(54) Title of the invention : LOW-PROFILE ULTRASOUND TRANSDUCER

(51) International classification :G01N
(31) Priority Document No :61/291,804
(32) Priority Date :31/12/2009
(33) Name of priority country :U.S.A.
(86) International Application No :PCT/US2011/020062
Filing Date :03/01/2011
(87) International Publication No :WO 2011/082408
(61) Patent of Addition to Application Number :NA
Filing Date :NA
(62) Divisional to Application Number :NA
Filing Date :NA

(71)**Name of Applicant :**
1)ZETROZ LLC
Address of Applicant :401 East State Street Suite 404 Ithaca New York 14850 USA U.S.A.
(72)**Name of Inventor :**
1)GEORGE K LEWIS JR

(57) Abstract :
The present invention relates to a low-profile ultrasound transducer. The low-profile ultrasound transducer includes a piezoelectric component operative to receive a driving signal from an energy generating module and to emit the driving signal as ultrasonic energy. The piezoelectric component has a front surface and a back surface, and the energy generating module includes a plurality of electronic components. The low-profile ultrasound transducer also includes a lens component directly or indirectly deposited on the front surface of the piezoelectric component. The lens component includes a lens portion and a support portion. The lens portion of the lens component is configured to control the direction and wave pattern of the ultrasonic energy emitted from the piezoelectric component. The support portion of the lens component is configured to hold the piezoelectric component in place and to provide a chamber for housing at least one electronic component of the energy generating module. Methods of use and related devices are also disclosed.

No. of Pages : 86 No. of Claims : 38

(12) PATENT APPLICATION PUBLICATION
(21) Application No.6598/DELNP/2012 A
(19) INDIA
(22) Date of filing of Application :26/07/2012
(43) Publication Date : 23/10/2015

(54) Title of the invention : PORTABLE ULTRASOUND SYSTEM

(51) International classification :G01N
(31) Priority Document No :61/291,804
(32) Priority Date :31/12/2009
(33) Name of priority country :U.S.A.
(86) International Application No :PCT/US2011/020061
Filing Date :03/01/2011
(87) International Publication No :WO 2011/082407
(61) Patent of Addition to Application Number :NA
Filing Date :NA
(62) Divisional to Application Number :NA
Filing Date :NA

(71)**Name of Applicant :**
1)ZETROZ LLC
Address of Applicant :401 East State Street Suite 404 Ithaca New York 14850 USA U.S.A.
(72)**Name of Inventor :**
1)GEORGE K LEWIS JR

(57) Abstract :
The present invention relates to a portable ultrasound system that can be used for a wide range of ultrasound applications. The portable ultrasound system includes an energy generating module operative to generate a driving signal that can be transformed into ultrasonic energy, where the energy generating module includes a power source, an oscillator, and a driver component. The portable ultrasound system also includes an ultrasound transducer having a piezoelectric component and a lens component. The ultrasound transducer is operative to receive the driving signal from the energy generating module, to transform the driving signal into ultrasonic energy, and to control the direction of the ultrasonic energy emitted from the ultrasound transducer. Also disclosed are devices containing the portable therapeutic ultrasound system of the present invention, as well as methods of using the system.

No. of Pages : 85 No. of Claims : 42

(12) PATENT APPLICATION PUBLICATION
(19) INDIA
(22) Date of filing of Application :26/07/2012
(21) Application No.6599/DELNP/2012 A
(43) Publication Date : 23/10/2015

(54) Title of the invention : STAND-ALONE WATER DETECTION DEVICE THAT INCLUDES A HYDROGEN SOURCE

(51) International classification :G01N
(31) Priority Document No :1000284
(32) Priority Date :26/01/2010
(33) Name of priority country :France
(86) International Application No :PCT/EP2011/050752
Filing Date :20/01/2011
(87) International Publication No :WO 2011/092105
(61) Patent of Addition to Application Number :NA
Filing Date :NA
(62) Divisional to Application Number :NA
Filing Date :NA

(71)**Name of Applicant :**
1)COMMISSARIAT A L™ENERGIE ATOMIQUE ET AUX ENERGIES ALTERNATIVES
Address of Applicant :25 rue Leblanc Batiment Le Ponant D • F-75015 Paris France
(72)**Name of Inventor :**
1)JESSICA THERY
2)PHILIPPE CORONEL
3)VINCENT FAUCHEUX
4)JEAN-YVES LAURENT

(57) Abstract :
The invention relates to a water detection device comprising at least one fuel cell comprising a first electrode (2), a layer of electrolyte (3), a seconde electrode (4) and an electrical measurement device (5) characterized in that the first electrode of the cell is in contact with a first face of a porous silicon substrate (1) comprising Si-H bonds, in such a manner as to liberate a flow of hydrogen in the presence of water. Advantageously, the substrate of porous silicon is incorporated into a first housing (6) permeable to water, the fuel cell being incorporated into a second housing (8) said second housing being impermeable to water and permeable to oxygen.

No. of Pages : 18 No. of Claims : 12

(12) PATENT APPLICATION PUBLICATION
(19) INDIA
(22) Date of filing of Application :25/07/2012
(21) Application No.6591/DELNP/2012 A
(43) Publication Date : 23/10/2015

(54) Title of the invention : TONGUE

(51) International classification :A44B11/25,B60R22/12,B60R22/30
(31) Priority Document No :2010079721
(32) Priority Date :30/03/2010
(33) Name of priority country :Japan
(86) International Application No :PCT/JP2011/054857
Filing Date :03/03/2011
(87) International Publication No :WO 2011/122225
(61) Patent of Addition to Application Number :NA
Filing Date :NA
(62) Divisional to Application Number :NA
Filing Date :NA

(71)**Name of Applicant :**
1)ASHIMORI INDUSTRY CO. LTD.
Address of Applicant :10 18 Kitahorie 3 chome Nishi ku Osaka shi Osaka 5500014 Japan
(72)**Name of Inventor :**
1)YAMAGUCHI Ryuta

(57) Abstract :
A tongue is provided with: a substantially box shaped containing case in which a tongue plate is contained and in which a through hole through which webbing is passed is formed at a position facing a pass through hole of the tongue plate; and a stopper bar around which a turned back portion of the webbing is wrapped the stopper bar being disposed so as to be able to slide and move in the front rear direction of the tongue plate while straddling the pass through hole of the tongue plate the stopper bar being pressed rearward by pressing means which are in contact with front end surfaces at both ends of the stopper bar in the longitudinal direction thereof. The containing case is provided with upstanding ribs formed in the inner surface thereof which faces the webbing wrapped around the stopper bar and the ribs extend in the front rear direction so as to press on the webbing. The ribs are arranged in the direction perpendicular to the sliding direction of the stopper bar so as to be parallel to each other.

No. of Pages : 23 No. of Claims : 3

(12) PATENT APPLICATION PUBLICATION
(19) INDIA
(22) Date of filing of Application :25/07/2012
(21) Application No.6592/DELNP/2012 A
(43) Publication Date : 23/10/2015

(54) Title of the invention : COMBINATION, KIT AND METHOD OF REDUCING INTRAOCULAR PRESSURE

(51) International classification :B23B
(31) Priority Document No :61/293,806
(32) Priority Date :11/01/2010
(33) Name of priority country :U.S.A.
(86) International Application No :PCT/US2011/020808
Filing Date :11/01/2011
(87) International Publication No :WO 2011/085361
(61) Patent of Addition to Application Number :NA
Filing Date :NA
(62) Divisional to Application Number :NA
Filing Date :NA

(71)**Name of Applicant :**
1)INOTEK PHARMACEUTICALS CORPORATION
Address of Applicant :131 Hartwell Avenue 1st Floor Suite 105 Lexington MA 02421 U.S.A.
(72)**Name of Inventor :**
1)NORMAN N. KIM
2)WILLIAM K. MCVICAR
3)THOMAS MCCAULEY
4)RUDOLF A. BAUMGARTNER

(57) Abstract :
The present invention is directed to a combination or a kit comprising a prostaglandin analog and an adenosine receptor A1 agonist and to a method of reducing intraocular pressure (IOP) in a subject using such combination or kit. The invention is particularly directed to a combination of latanoprost marketed under the brand Xalatan TM and Compound A.

No. of Pages : 62 No. of Claims : 23

(12) PATENT APPLICATION PUBLICATION
(19) INDIA
(22) Date of filing of Application :25/07/2012
(21) Application No.6593/DELNP/2012 A
(43) Publication Date : 23/10/2015

(54) Title of the invention : OXIDATION SYSTEM WITH SIDEDRAW SECONDARY REACTOR

(51) International classification :C07C
(31) Priority Document No :61/299,453
(32) Priority Date :29/01/2010
(33) Name of priority country :U.S.A.
(86) International Application No :PCT/US2010/059638
Filing Date :09/12/2010
(87) International Publication No :WO 2011/093949
(61) Patent of Addition to Application Number :NA
Filing Date :NA
(62) Divisional to Application Number :NA
Filing Date :NA

(71)**Name of Applicant :**
1)GRUPO PETROTEMEX S.A. DE C.V.
Address of Applicant :Ricardo Margain No. 444 Torre sur Piso 16 CoI. Valle del Campestre 66265 San Pedro Garza Garcia Nuevo Leon Mexico
(72)**Name of Inventor :**
1)ASHFAQ SHAIKH
2)DAVID LANGE

(57) Abstract :
Disclosed are process and apparatus for vertical splitting of the oxygen supply to a post-oxidation reactor. Further disclosed are process and apparatus for supplying reaction medium to a post-oxidation reactor at a mid-level inlet. Such apparatus and process can assist in reducing oxygen pinch throughout the post-oxidation reactor.

No. of Pages : 52 No. of Claims : 18

(12) PATENT APPLICATION PUBLICATION
(21) Application No.6594/DELNP/2012 A
(19) INDIA
(22) Date of filing of Application :26/07/2012
(43) Publication Date : 23/10/2015

(54) Title of the invention : CORIOLIS GYROSCOPE HAVING CORRECTION UNITS AND METHOD FOR REDUCING THE QUADRATURE BIAS •

(51) International classification :G06Q
(31) Priority Document No :10 2010 006 584.6
(32) Priority Date :02/02/2010
(33) Name of priority country :Germany
(86) International Application No :PCT/EP2011/000444
Filing Date :01/02/2011
(87) International Publication No :WO 2011/095317
(61) Patent of Addition to Application Number :NA
Filing Date :NA
(62) Divisional to Application Number :NA
Filing Date :NA

(71)**Name of Applicant :**
1)NORTHROP GRUMMAN LITEF GMBH
Address of Applicant :Lrracher Strasse 18 79115 Freiburg Germany
(72)**Name of Inventor :**
1)WOLFRAM GEIGER
2)PETER LEINFELDER

(57) Abstract :
A Coriolis gyroscope (1) comprises a mass system that can be excited to perform vibrations parallel to a first axis, whereby a deflection of said mass system on account of a Coriolis force along a second axis that is provided erpendicular to the first axis is detectable, and at least one first correction unit (30) and at least one second correction unit (40), which each comprise a plurality of stationary correction electrodes (31, 32, 41, 42) and moving correction electrodes (24, 25, 26, 27), whereby the stationary correction electrodes (31, 32, 41, 42) extend in the direction of the first axis and are firmly connected to the substrate by corresponding anchor structures (33, 43), and the moving correction electrodes (24, 25, 26 , 27) are a part of the mass system. A method for reducing the quadrature bias of a Coriolis gyroscope (1) of this type comprises applying at least temporarily constant corrective voltages to the correction units (30, 40). (Fig. 1)

No. of Pages : 32 No. of Claims : 21

(12) PATENT APPLICATION PUBLICATION
(19) INDIA
(22) Date of filing of Application :26/07/2012
(21) Application No.6595/DELNP/2012 A
(43) Publication Date : 23/10/2015

(54) Title of the invention : SYNERGISTIC HERBICIDAL COMPOSITION CONTAINING PENOXSULAM AND OXYFLUORFEN •

(51) International classification :C12N
(31) Priority Document No :61/299,461
(32) Priority Date :29/01/2010
(33) Name of priority country :U.S.A.
(86) International Application No :PCT/US2011/022686
Filing Date :27/01/2011
(87) International Publication No :WO 2011/094386
(61) Patent of Addition to Application Number :NA
Filing Date :NA
(62) Divisional to Application Number :NA
Filing Date :NA

(71)**Name of Applicant :**
1)DOW AGROSCIENCES LLC
Address of Applicant :9330 Zionsville Road Indianapolis IN 46268 U.S.A.
(72)**Name of Inventor :**
1)CHRISTIAN JOUSSEAUME
2)SALVADOR CARRASCO CAMPOS
3)RICHARD MANN
4)MONICA SORRIBAS AMELA

(57) Abstract :
Penoxsulam and oxyfluorfen synergistically control weeds in crops, especially perennial tree and vine crops, rice, cereal and grain crops, pastures, rangelands, IVM and turf. Such compositions provide improved pre-emergence residual and post-emergence burndown with residual herbicidal weed control.

No. of Pages : 16 No. of Claims : 5

(12) PATENT APPLICATION PUBLICATION
(19) INDIA
(22) Date of filing of Application :20/04/2012
(21) Application No.3445/DELNP/2012 A
(43) Publication Date : 23/10/2015

(54) Title of the invention : FORWARD OSMOSIS SEPARATION PROCESSES

(51) International classification :C07C
(31) Priority Document No :61/255,734
(32) Priority Date :28/10/2009
(33) Name of priority country :U.S.A.
(86) International Application No :PCT/US2010/054512
Filing Date :28/10/2010
(87) International Publication No :WO 2011/059751
(61) Patent of Addition to Application Number :NA
Filing Date :NA
(62) Divisional to Application Number :NA
Filing Date :NA

(71)**Name of Applicant :**
1)OASYS WATER, INC.
Address of Applicant :21 DRYDOCK AVENUE, 7TH FLOOR, BOSTON, MASSACHUSETTS 02210, UNITED STATES OF AMERICA U.S.A.
(72)**Name of Inventor :**
1)ROBERT L. MCGINNIS
2)JOSEPH E. ZUBACK

(57) Abstract :
Separation processes using engineered osmosis are disclosed generally involving the extraction of solvent from a first solution to concentrate solute by using a second concentrated solution to draw the solvent from the first solution across a semi-permeable membrane. Enhanced efficiency may result from using low grade waste heat from industrial or commercial sources.

No. of Pages : 52 No. of Claims : 31

(12) PATENT APPLICATION PUBLICATION
(19) INDIA
(22) Date of filing of Application :11/06/2012
(21) Application No.5128/DELNP/2012 A
(43) Publication Date : 23/10/2015

(54) Title of the invention : COMBUSTION CHAMBER FOR CHARCOAL STOVE

(51) International classification :A47J 37/07
(31) Priority Document No :61/261,694
(32) Priority Date :16/11/2009
(33) Name of priority country :U.S.A.
(86) International Application No :PCT/US2010/056790
Filing Date :16/11/2010
(87) International Publication No :WO 2011/060403
(61) Patent of Addition to Application Number :NA
Filing Date :NA
(62) Divisional to Application Number :NA
Filing Date :NA

(71)**Name of Applicant :**
1)COLORADO STATE UNIVERSITY RESEARCH FOUNDATION
Address of Applicant :P.O. BOX 483, FORT COLLINS, COLORADO 80522, UNITED STATES OF AMERICA U.S.A.
(72)**Name of Inventor :**
1)MORGAN W. DEFOORT
2)CORY KREUTZER
3)SEAN BABBS
4)JOSH AGENBROAD
5)CHRISTIAN L'ORANGE

(57) Abstract :
A combustion chamber may include an upper and a lower chamber. The chambers may be separable to aid in loading fuel and removing spent fuel. The cross-section of the upper combustion chamber may be less than the cross-section of the lower section. Charcoal or other biomass fuel may be added into the lower combustion chamber and may be supported by a grate. Oxygen may be fed into the combustion chamber through a plurality of apertures that may be substantially shielded from direct line of site of the fuel bed. The upper combustion chamber may further include an annular constriction, to aid in constricting the view factor between the cooking vessel and the fuel bed. The constriction may also aid in radiating energy back to the fuel bed.

No. of Pages : 31 No. of Claims : 20

(12) PATENT APPLICATION PUBLICATION
(21) Application No.5129/DELNP/2012 A
(19) INDIA
(22) Date of filing of Application :11/06/2012
(43) Publication Date : 23/10/2015

(54) Title of the invention : LOGICAL LINK CONTROL RESONANCE CONVERTER CONTROL METHOD, SYNCHRONOUS RECTIFICATION CONTROL METHOD AND DEVICE

(51) International classification :H02M 3/335
(31) Priority Document No :200910221471.4
(32) Priority Date :12/11/2009
(33) Name of priority country :China
(86) International Application No :PCT/CN2010/077332
Filing Date :26/09/2010
(87) International Publication No :WO 2011/057523
(61) Patent of Addition to Application Number :NA
Filing Date :NA
(62) Divisional to Application Number :NA
Filing Date :NA

(71)**Name of Applicant :**
1)ZTE CORPORATION
Address of Applicant :ZTE PLAZA, KEJI ROAD SOUTH, HI-TECH INDUSTRIAL PARK, NANSHAN DISTRICT, SHENZHEN , GUANGDONG PROVINCE 518057, P. R. CHINA China
(72)**Name of Inventor :**
1)QIN SITU
2)JUNKAI LI
3)HUI LIU

(57) Abstract :
The present invention discloses a Logic Link Control (LLC) resonance converter control method as well as a synchronous rectification control method and device. The LLC resonance converter control method comprises: judging whether a load works at a preset state according to a switch-on frequency of the input switch tube of a LLC resonance circuit; if yes, making the LLC resonance circuit work at a width modulation control mode; otherwise, making the LLC resonance circuit work at a frequency modulation control mode, wherein the preset state includes a light load state or a no load state. The present invention realizes the voltage stabilization when the LLC resonance circuit is in no load or light load condition, reduces the circuit loss, efficiently simplifies the peripheral hardware circuit and is more reliable to be used in comparison with the traditional technical scheme.

No. of Pages : 32 No. of Claims : 12

(12) PATENT APPLICATION PUBLICATION
(19) INDIA
(22) Date of filing of Application :11/06/2012
(21) Application No.5130/DELNP/2012 A
(43) Publication Date : 23/10/2015

(54) Title of the invention : HYDROPHOBIC INTERACTION CHROMATOGRAPHY MEMBRANES, AND METHODS OF USE THEREOF

(51) International classification :C08J 9/35
(31) Priority Document No :61/261,009
(32) Priority Date :13/11/2009
(33) Name of priority country :U.S.A.
(86) International Application No :PCT/IB2010/003049
Filing Date :12/11/2010
(87) International Publication No :WO 2011/058439
(61) Patent of Addition to Application Number :NA
Filing Date :NA
(62) Divisional to Application Number :NA
Filing Date :NA

(71)**Name of Applicant :**
1)NATRIX SEPARATIONS, INC.
Address of Applicant :5295 JOHN LUCAS DRIVE, UNIT 6, BURLINGTON, ON L7L 6A8, CANADA Canada
(72)**Name of Inventor :**
1)ELENA N. KOMKOVA
2)ALICJA M. MIKA (DECEASED)
3)MARIANNE PANKRATZ

(57) Abstract :
DESCRIBED HEREIN ARE COMPOSITE MATERIALS AND METHODS OF USING THEM FOR HYDROPHOBIC INTERACTION CHROMATOGRAPHY (HIC). IN CERTAIN EMBODIMENTS, THE COMPOSITE MATERIAL COMPRISES A SUPPORT MEMBER, COMPRISING A PLURALITY OF PORES EXTENDING THROUGH THE SUPPORT MEMBER; AND A MACROPOROUS CROSS-LINKED GEL, COMPRISING A PLURALITY OF MACROPORES, AND A PLURALITY OF PENDANT HYDROPHOBIC MOIETIES. IN CERTAIN EMBODIMENTS, THE COMPOSITE MATERIALS MAY BE USED IN THE SEPARATION OR PURIFICATION OF A BIOLOGICAL MOLECULE OR BIOLOGICAL ION.

No. of Pages : 50 No. of Claims : 48

(12) PATENT APPLICATION PUBLICATION
(19) INDIA
(22) Date of filing of Application :26/07/2012
(21) Application No.6609/DELNP/2012 A
(43) Publication Date : 23/10/2015

(54) Title of the invention : INTELLIGENT & SELF CLEANING SOLAR PANELS

(51) International classification	:F24J2/46,B08B6/00,H01L31/0216
(31) Priority Document No	:10152092.2
(32) Priority Date	:29/01/2010
(33) Name of priority country	:EPO
(86) International Application No	:PCT/IB2011/050422
Filing Date	:31/01/2011
(87) International Publication No	:WO 2011/092670
(61) Patent of Addition to Application Number	:NA
Filing Date	:NA
(62) Divisional to Application Number	:NA
Filing Date	:NA

(71)**Name of Applicant :**
1)VOLOTEK SA
Address of Applicant :Rue du Pr de la Fontaine 15 CH 1242 Satigny Switzerland
(72)**Name of Inventor :**
1)MCKARRIS George

(57) Abstract :
The present invention relates to a method and apparatus for levitating and conveying sand dust or melting snow deposits off the surface of objects in particular solar panels mirrors glass objects and the like.

No. of Pages : 19 No. of Claims : 14

(12) PATENT APPLICATION PUBLICATION
(19) INDIA
(22) Date of filing of Application :20/04/2012
(21) Application No.3451/DELNP/2012 A
(43) Publication Date : 23/10/2015

(54) Title of the invention : ADHESIVE PATCH

(51) International classification :A61F 13/02
(31) Priority Document No :2009-237571
(32) Priority Date :14/10/2009
(33) Name of priority country :Japan
(86) International Application No :PCT/JP2010/067140
Filing Date :30/09/2010
(87) International Publication No :WO 2011/046024
(61) Patent of Addition to Application Number :NA
Filing Date :NA
(62) Divisional to Application Number :NA
Filing Date :NA

(71)**Name of Applicant :**
1)HISAMITSU PHARMACEUTICAL CO., INC.
Address of Applicant :408, TASHIRODAIKAN-MACHI, TOSU-SHI, SAGA 841-0017, JAPAN Japan
(72)**Name of Inventor :**
1)MITSUTOSHI TSURUTA
2)KENTARO ISHIMATSU
3)KIYOTAKA TAKADA

(57) Abstract :
An adhesive patch easily applied to the skin. An adhesive patch 10 according to the present invention includes a support 12, a pressure-sensitive adhesive agent layer 14 provided on one surface of the support, a release sheet 16 which is releasably attached to the pressure-sensitive adhesive agent layer, and a weakened part 20 which is formed in the release sheet, that is for easily dividing the release sheet, and further, a pinching piece forming sheet 18 is fixed so as to cover the weakened part 20 on the release sheet, and portions of the pinching piece forming sheet other than the fixed portions 22 function as pinching pieces 18a and 18b, and in the pinching piece forming sheet as well, a weakened part 20 for easily dividing the release sheet is formed at a position corresponding to the weakened part of the release sheet.

No. of Pages : 54 No. of Claims : 4

(12) PATENT APPLICATION PUBLICATION
(19) INDIA
(22) Date of filing of Application :08/06/2012
(21) Application No.5101/DELNP/2012 A
(43) Publication Date : 23/10/2015

(54) Title of the invention : NOVEL CLASS OF MONOSPECIFIC AND BISPECIFIC HUMANIZED ANTIBODIES THAT TARGET THE INSULIN-LIKE GROWTH FACTOR TYPE I RECEPTOR (IGF-1R)

(51) International classification :A61K 39/395
(31) Priority Document No :PCT/US2010/021345
(32) Priority Date :19/01/2010
(33) Name of priority country :U.S.A.
(86) International Application No :PCT/US2010/027155
Filing Date :12/03/2010
(87) International Publication No :WO 2011/090492
(61) Patent of Addition to Application Number :NA
Filing Date :NA
(62) Divisional to Application Number :NA
Filing Date :NA

(71)**Name of Applicant :**
1)IMMUNOMEDICS, INC.
Address of Applicant :300 AMERICAN ROAD, MORRIS PLAINS, NEW JERSEY 07950, U.S.A. U.S.A.
(72)**Name of Inventor :**
1)CHANG, CHIEN-HSING
2)LOSMAN, MICHELE J.
3)GOLDENBERG, DAVID M.

(57) Abstract :
The present invention provides compositions and methods of use of anti-IGF-1R antibodies or fragments. Preferably the antibodies bind to IGF-1R but not IR; are not agonists for IGF-1R; do not block binding of IGF-1 or IGF-2 to isolated IGF-1R; effectively neutralize activation of IGF-1R by IGF- 1 in intact cells; block binding of R1 antibody to IGF-1 R. The antibodies may be murine, chimeric, humanized or human R1 antibodies comprising heavy chain CDR sequences DYYMY (SEQ ID NO:l), YITNYGGSTYYPDTVKG (SEQ ID NO:2) and QSNYDYDGWFAY (seq id no:3) and light chain CDR sequences KASQEVGTAVA (seq id no:4), WASTRHT (SEQ ID NO:5) and QQYSNYPLT (SEQ ID NO:6). Preferably the antibodies bind an epitope of IGF-1R comprising the first half of the cysteine-rich domain of IGF-1R (residues 15 1-222). The anti-IGF-1R antibodies may be used for diagnosis or therapy of various diseases such as cancer. FIG. 138 ME-180

No. of Pages : 123 No. of Claims : 55

(12) PATENT APPLICATION PUBLICATION
(19) INDIA
(22) Date of filing of Application :26/07/2012
(21) Application No.6603/DELNP/2012 A
(43) Publication Date : 23/10/2015

(54) Title of the invention : SINGLE PHASE MULTILEVEL INVERTER

(51) International classification :H04N
(31) Priority Document No :61/304,538
(32) Priority Date :15/02/2010
(33) Name of priority country :U.S.A.
(86) International Application No :PCT/US2011/024864
Filing Date :15/02/2011
(87) International Publication No :WO 2011/100738
(61) Patent of Addition to Application Number :NA
Filing Date :NA
(62) Divisional to Application Number :NA
Filing Date :NA

(71)**Name of Applicant :**
1)SIEMENS CORPORATION
Address of Applicant :170 Wood Avenue South Iselin New Jersey 088390 U.S.A.
(72)**Name of Inventor :**
1)YAOSUO XUE
2)MADHAV MANJREKAR

(57) Abstract :
Systems and methods are described that provide multilevel inverters having a plurality of levels using a simplified topology. For single phase systems, embodiments provide a full-bridge topology using bidirectional switching interconnections

No. of Pages : 43 No. of Claims : 22

(12) PATENT APPLICATION PUBLICATION
(21) Application No.6604/DELNP/2012 A
(19) INDIA
(22) Date of filing of Application :26/07/2012
(43) Publication Date : 23/10/2015

(54) Title of the invention : IMPROVED MOLDING SYSTEM, METHOD AND ARTICLES FORMED THEREBY

(51) International classification :F02K
(31) Priority Document No :61/295,854
(32) Priority Date :18/01/2010
(33) Name of priority country :U.S.A.
(86) International Application No :PCT/US2011/021556
Filing Date :18/01/2011
(87) International Publication No :WO 2011/088461
(61) Patent of Addition to Application Number :NA
Filing Date :NA
(62) Divisional to Application Number :NA
Filing Date :NA

(71)**Name of Applicant :**
1)POLYWORKS, INC
Address of Applicant :1 Tupperware Drive North Smithfield RI 01896 USA U.S.A.
(72)**Name of Inventor :**
1)RICHARD B FOX
2)JAMES E GAUDET

(57) Abstract :
Disclosed herein is a molding system that facilitates the molding of very thick products from materials such as gel and/or mechanically frothed foam, substantially free of visual defects, such as air bubbles, by controlling the rate of mold closure and/or interrupting the mold closure.

No. of Pages : 46 No. of Claims : 17

(12) PATENT APPLICATION PUBLICATION
(21) Application No.6605/DELNP/2012 A
(19) INDIA
(22) Date of filing of Application :26/07/2012
(43) Publication Date : 23/10/2015

(54) Title of the invention : ULTRASOUND COUPLING DEVICE

(51) International classification :G01N
(31) Priority Document No :61/291,804
(32) Priority Date :31/12/2009
(33) Name of priority country :U.S.A.
(86) International Application No :PCT/US2011/020052
Filing Date :03/01/2011
(87) International Publication No :WO 2011/082402
(61) Patent of Addition to Application Number :NA
Filing Date :NA
(62) Divisional to Application Number :NA
Filing Date :NA

(71)**Name of Applicant :**
1)ZETROZ LLC
Address of Applicant :401 East State Street Suite 404 Ithaca New York 14850 USA U.S.A.
(72)**Name of Inventor :**
1)GEORGE K LEWIS JR
2)BRYANT GUFFEY

(57) Abstract :
The present invention relates to an ultrasound coupling device for use with various ultrasound transducers, systems, and applications. The coupling device includes a coupling compartment comprising a chamber having a continuous side wall and an opening on a first end. The continuous side wall is configured to hold a low-profile ultrasound transducer within the chamber so that a front ultrasound emitting surface of the low-profile ultrasound transducer faces outward toward the chamber opening. The front ultrasound emitting surface is configured to control the direction and wave pattern of ultrasonic energy emitted from the transducer. The continuous side wall is also configured to hold a quantity of an ultrasound conductive medium within the chamber and is operative to keep the ultrasound conductive medium in simultaneous contact with a surface of a subject and with at least a portion of the front ultrasound emitting surface of the transducer. The present invention also relates to an ultrasound apparatus, kit, and methods of using the ultrasound coupling device, apparatus, and kit.

No. of Pages : 41 No. of Claims : 30

(12) PATENT APPLICATION PUBLICATION
(19) INDIA
(22) Date of filing of Application :11/06/2012
(21) Application No.5148/DELNP/2012 A
(43) Publication Date : 23/10/2015

(54) Title of the invention : METHOD OF SYNCHRONISING DIGITAL MEDIA CONTENT

(51) International classification :G06F 17/30
(31) Priority Document No :0921559.1
(32) Priority Date :09/12/2009
(33) Name of priority country :U.K.
(86) International Application No :PCT/GB2010/052064
Filing Date :09/12/2010
(87) International Publication No :WO 2011/070366
(61) Patent of Addition to Application Number :NA
Filing Date :NA
(62) Divisional to Application Number :NA
Filing Date :NA

(71)**Name of Applicant :**
1)OMNIFONE LTD
Address of Applicant :ISLAND STUDIOS, 47 BRITISH GROVE, LONDON W4 2NL (GB) U.K.
(72)**Name of Inventor :**
1)KNIGHT, MARK
2)SANT, PHILIP
3)EVANS, CHRISTOPHER
4)WHITE, MATTHEW

(57) Abstract :
Synchronising digital media content to a device is achieved using the following steps: (a) identifying a digital media collection linked to a given user; (b) analysing the content of the digital media collection to derive a taste signature for that user; (c) identifying, based on the taste signature analysis, the priority order in which media content files are to be provided to the device during a synchronisation; (d) providing one or more media content files to the device during the synchronisation.

No. of Pages : 30 No. of Claims : 22

(12) PATENT APPLICATION PUBLICATION
(21) Application No.5149/DELNP/2012 A
(19) INDIA
(22) Date of filing of Application :11/06/2012
(43) Publication Date : 23/10/2015

(54) Title of the invention : A SHALLOW WATER SYSTEM

(51) International classification :B63B 21/50
(31) Priority Document No :200901333
(32) Priority Date :16/12/2009
(33) Name of priority country :Denmark
(86) International Application No :PCT/DK2010/050323
Filing Date :26/11/2010
(87) International Publication No :WO 2011/072687
(61) Patent of Addition to Application Number :NA
Filing Date :NA
(62) Divisional to Application Number :NA
Filing Date :NA

(71)**Name of Applicant :**
1)NATIONAL OIL WELL VARCO DENMARK I/S
Address of Applicant :PRIORPARKEN 480, DK-2605 BRˇNDBY (DK) Denmark
(72)**Name of Inventor :**
1)CHRISTENSEN, CLAUS DENCKER

(57) Abstract :
The invention relates to a shallow water system comprising a floating weathervaning vessel with a topside hang-off structure, a subsea structure and at least one flexible transporting unit extending from the topside hang-off structure to the subsea structure. The weathervaning vessel has a bow with a lowermost bow midpoint. The weathervaning vessel is moored such that at still water it can weathervane around a weathervaning vertical centre line, such that the position of the lowermost bow midpoint follows an annular lowermost bow line which defines a vertical tube shaped border to a lowermost bow midpoint exclusion zone (LE-zone). The subsea structure is arranged in said LE-zone. The weathervaning vertical centre line is preferably the nominal weathervaning vertical centre line. The weathervaning vessel is generally a line moored weathervaning vessel The shallow water system of the invention provides a simple system for design with a high safety against damaging of flexible transporting unit. The shallow water system is in particular beneficial for use at very shallow water.

No. of Pages : 27 No. of Claims : 20

(12) PATENT APPLICATION PUBLICATION
(19) INDIA
(22) Date of filing of Application :26/07/2012
(21) Application No.6617/DELNP/2012 A
(43) Publication Date : 23/10/2015

(54) Title of the invention : MICROORGANISM PRODUCTION OF HIGH-VALUE CHEMICAL PRODUCTS AND RELATED COMPOSITIONS METHODS AND SYSTEMS

(51) International classification :C12P7/00
(31) Priority Document No :61/298844
(32) Priority Date :27/01/2010
(33) Name of priority country :U.S.A.
(86) International Application No :PCT/US2011/022790
Filing Date :27/01/2011
(87) International Publication No :WO 2011/094457
(61) Patent of Addition to Application Number :NA
Filing Date :NA
(62) Divisional to Application Number :NA
Filing Date :NA

(71)**Name of Applicant :**
1)OPX BIOTECHNOLOGIES INC.
Address of Applicant :2425 55th Street Suite 100 Boulder CO 80301 U.S.A.
2)THE REGENTS OF THE UNIVERSITY OF COLORADO A BODY CORPORATE
(72)**Name of Inventor :**
1)LYNCH Michael D.
2)GILL Ryan T.
3)WARNECKE LIPSCOMB Tanya

(57) Abstract :
This invention relates to metabolically engineered microorganism strains such as bacterial strains in which there is an increased utilization of malonyl CoA for production of a chemical product which includes polyketides and 3 hydroxypropionic acid.

No. of Pages : 285 No. of Claims : 33

(12) PATENT APPLICATION PUBLICATION
(21) Application No.6618/DELNP/2012 A
(19) INDIA
(22) Date of filing of Application :26/07/2012
(43) Publication Date : 23/10/2015

(54) Title of the invention : POWERED SIGNAL CONTROLLED HAND ACTUATED ARTICULATING DEVICE AND METHOD OF USE •

(51) International classification :F04D
(31) Priority Document No :61/298,317
(32) Priority Date :26/01/2010
(33) Name of priority country :U.S.A.
(86) International Application No :PCT/US2011/022518
Filing Date :26/01/2011
(87) International Publication No :WO 2011/094269
(61) Patent of Addition to Application Number :NA
Filing Date :NA
(62) Divisional to Application Number :NA
Filing Date :NA

(71)**Name of Applicant :**
1)CAREFUSION 2200 INC.
Address of Applicant :3750 Torrey View Ct. San Diego CA 92130 United States of America U.S.A.
(72)**Name of Inventor :**
1)DOYLE Mark

(57) Abstract :
An articulating device for aiding a user such as a surgeon or other medical practitioner in manipulating a hand-actuated articulating device by providing a powered force used for moving the device thus reducing or eliminating the need for the user to provide all the force required to move the device. The articulating device includes an input device which receives one or more user inputs to direct a slave portion to perform work. The articulating device further includes a control portion that assists in transferring user input to the slave portion and that further provides power assistance to at least partially drive the slave portion in combination with the user input received by the input device.

No. of Pages : 43 No. of Claims : 33

(12) PATENT APPLICATION PUBLICATION
(21) Application No.6619/DELNP/2012 A
(19) INDIA
(22) Date of filing of Application :26/07/2012
(43) Publication Date : 23/10/2015

(54) Title of the invention : METHOD AND DEVICE FOR CHANNEL ESTIMATION IN ORTHOGONAL FREQUENCY DIVISION MULTIPLEXING SYSTEM

(51) International classification :H04W24/00
(31) Priority Document No :201010138069.2
(32) Priority Date :24/03/2010
(33) Name of priority country :China
(86) International Application No :PCT/CN2010/078354
Filing Date :02/11/2010
(87) International Publication No :WO 2011/116606
(61) Patent of Addition to Application Number :NA
Filing Date :NA
(62) Divisional to Application Number :NA
Filing Date :NA

(71)**Name of Applicant :**
1)ZTE CORPORATION
Address of Applicant :ZTE Plaza Keji Road South Hi Tech Industrial Park Nanshan Shenzhen Guangdong 518057 China
(72)**Name of Inventor :**
1)YOU Yueyi
2)XIAO Haiyong

(57) Abstract :
A method and device for channel estimation in an Orthogonal Frequency Division Multiplexing (OFDM) system are disclosed. The method includes steps as follows: A grouping Physical Resource Blocks (PRBs) in bandwidth of the OFDM system; B extracting at least one from the groups to perform channel estimation and obtaining channel coefficients wherein the number of the extracted groups is less than the number of the total groups; C accomplishing multi input multi output (MIMO) demodulation with the obtained channel coefficients. D judging whether the channel estimation of groups is completed if yes ending otherwise returning to step B. By dividing PRBs in the bandwidth of the OFDM system into some groups and then performing channel estimation in turn separately with each group of resource blocks with the device the storage sharing is realized and thereby the storage is saved.

No. of Pages : 34 No. of Claims : 10

(12) PATENT APPLICATION PUBLICATION
(19) INDIA
(22) Date of filing of Application :11/06/2012
(21) Application No.5158/DELNP/2012 A
(43) Publication Date : 23/10/2015

(54) Title of the invention : PROCESS FOR THE MANUFACTURE OF A MULTILAYER MATERIAL SHEET, MULTILAYER MATERIAL SHEET AND USE HEREOF

(51) International classification :B32B 5/12
(31) Priority Document No :09179673.0
(32) Priority Date :17/12/2009
(33) Name of priority country :EUROPEAN UNION
(86) International Application No :PCT/EP2010/069939
Filing Date :16/12/2010
(87) International Publication No :WO 2011/073331
(61) Patent of Addition to Application Number :NA
Filing Date :NA
(62) Divisional to Application Number :NA
Filing Date :NA

(71)**Name of Applicant :**
1)DSM IP ASSETS B.V.
Address of Applicant :HET OVERLOON 1, NL-6411 TE HEERLEN, THE NETHERLANDS Netherlands
(72)**Name of Inventor :**
1)VAN PUTTEN, KOEN
2)WILMS, JOHANNES MARIA MATHIAS
3)VAN KLINKEN, ERNST JAN
4)VAN DER WERFF, HARM
5)NIELABA, LEONARD JOSEF ARNOLD
6)MARISSEN, ROELOF

(57) Abstract :
Methods of selling endowment policies and funding an education are provided. In a general embodiment, the method includes selling a first endowment policy to an individual, allowing the individual to purchase additional endowment policies at the same price as the first endowment policy, and reminding the individual using an automatic computer generated reminder of the right to purchase additional endowment policies. The endowment policies can be used to fund an education.

No. of Pages : 14 No. of Claims : 15

(12) PATENT APPLICATION PUBLICATION
(21) Application No.5159/DELNP/2012 A
(19) INDIA
(22) Date of filing of Application :11/06/2012
(43) Publication Date : 23/10/2015

(54) Title of the invention : CAPROLACTAM RECOVERY WITH MEMBRANE TREATMENT

(51) International classification :C07D 201/16
(31) Priority Document No :09179903.1
(32) Priority Date :18/12/2009
(33) Name of priority country :EUROPEAN UNION
(86) International Application No :PCT/EP2010/070097
Filing Date :17/12/2010
(87) International Publication No :WO 2011/073400
(61) Patent of Addition to Application Number :NA
Filing Date :NA
(62) Divisional to Application Number :NA
Filing Date :NA

(71)**Name of Applicant :**
1)DSM IP ASSETS B.V.
Address of Applicant :HET OVERLOON 1, NL-6411 TE HEERLEN, THE NETHERLANDS Netherlands
(72)**Name of Inventor :**
1)AVRAMESCU, MARIA ELENA
2)TINGE, JOHAN THOMAS

(57) Abstract :
The invention relates to a process for treating an aqueous solution containing Ecaprolactam, ammonium sulphate and one or more other impurities, comprising one or more organic impurities from a caprolactam production process and optionally other salts than ammonium sulphate, by means of a membrane process, thereby obtaining a retentate and a permeate, in which process the membrane used is selected from the group of polyether sulphone membranes, sulphonated polyether sulphone membranes, polyester membranes, polysulphone membranes, aromatic polyamide membranes, polyvinyl alcohol membranes, polypiperazine membranes, cellulose acetate membranes, titanium oxide membranes, zirconium oxide membranes and aluminium oxide membranes, having a molecular weight cut off in the range of 100-1000 glmol; and wherein more than 60 wt.% of the caprolactam in the aqueous solution is passed through a membrane to the permeate side, to obtain a purified caprolactam containing permeate stream, and wherein at least 50 wt.% of the organic impurities are retained in the retentate solution.

No. of Pages : 20 No. of Claims : 16

(12) PATENT APPLICATION PUBLICATION
(21) Application No.6627/DELNP/2012 A
(19) INDIA
(22) Date of filing of Application :26/07/2012
(43) Publication Date : 23/10/2015

(54) Title of the invention : PROCESS AND APPARATUS FOR DECONTAMINATING WATER BY PRODUCING HYDROXIL IONS THROUGH HYDROLYSIS OF WATER MOLECULES

(51) International classification :C02F1/48
(31) Priority Document No :NA
(32) Priority Date :NA
(33) Name of priority country :NA
(86) International Application No :PCT/ES2010/000531
Filing Date :29/12/2010
(87) International Publication No :WO 2011/080366
(61) Patent of Addition to Application Number :NA
Filing Date :NA
(62) Divisional to Application Number :NA
Filing Date :NA

(71)**Name of Applicant :**
1)CAPETTINI, SERGIO GABRIEL
Address of Applicant :AV. DE LA INDUSTRIA, 6-8 NAVE 17 - 28110 ALCOBENDAS- (MADRID) ESPANA Spain
(72)**Name of Inventor :**
1)CAPETTINI, SERGIO GABRIEL

(57) Abstract :
A water decontaminization system (100) and method utilizes an apparatus for producing hydroxyl ions through hydrolysis of water molecules to oxydize contaminents in the water. The apparatus includes a water chamber (112) with an input water conduit and an output water conduit to establish a water flow in the chamber (112), in which electrodes (6) positioned in the water chamber (112) apply a voltage potential which causes electric current to flow through the water to create hydroxyl ions in the water, in a manner effective to kill contaminents such as viruses, bacteria, algae, organic substances, etc. FIG. 7

No. of Pages : 23 No. of Claims : 14

(12) PATENT APPLICATION PUBLICATION
(19) INDIA
(22) Date of filing of Application :26/07/2012
(21) Application No.6628/DELNP/2012 A
(43) Publication Date : 23/10/2015

(54) Title of the invention : METHOD OF MASS FLOW CONTROL AND DEVICE FOR MASS FLOW CONTROL

(51) International classification :A24C5/35
(31) Priority Document No :P390413
(32) Priority Date :10/02/2010
(33) Name of priority country :Poland
(86) International Application No :PCT/PL2011/000012
Filing Date :08/02/2011
(87) International Publication No :WO 2011/099880
(61) Patent of Addition to Application Number :NA
Filing Date :NA
(62) Divisional to Application Number :NA
Filing Date :NA

(71)**Name of Applicant :**
1)INTERNATIONAL TOBACCO MACHINERY POLAND SP. Z.O.O.
Address of Applicant :ul. Warsztatowa 19 A PL 26 600 Radom Poland
(72)**Name of Inventor :**
1)CIESLIKOWSKI Bartosz

(57) Abstract :
The method of control consists in altering the flow path by means of swing and/or slide shiftable movable elements (5 and 10) constituting a fragment of the opposite side walls (2 and 3) of an angularly positioned channel (1) which after shifting stop the flow or direct it to another receiving device or simultaneously to multiple receiving devices with the possibility of restoring the flow after shifting the movable elements (5 and 10) to previous position. The device is situated in the channel (1) the first side wall (2) of which is provided with a first movable element (5) and a fragment of the opposite second side wall (3) forms a second movable element (10) with the first movable element (5) being mounted on a pivot (6) together with a perpendicular plate (7) on which also the second movable element (10) by means of an actuator (9) is mounted. The second element (10) may have the shape of a cylinder sector or a triangular prism or take the shape of a rotating plate. Below the movable elements (5 and 10) and above the horizontal conveyor (4) a shutoff element (8) or a disposal path may be situated. Below the disposal path a container instead of the horizontal conveyor (4) may be arranged. Movable elements may appear also in the central part of the angularly positioned channel between its upper and lower parts.

No. of Pages : 23 No. of Claims : 21

(12) PATENT APPLICATION PUBLICATION
(19) INDIA
(22) Date of filing of Application :26/07/2012
(21) Application No.6611/DELNP/2012 A
(43) Publication Date : 23/10/2015

(54) Title of the invention : METHOD FOR TREATING FUNGAL INFECTIONS FUNGICIDAL COMPOSITIONS AND THEIR USE

(51) International classification :A01N37/50,A01N37/44,A01N43/653
(31) Priority Document No :PI10003614
(32) Priority Date :05/02/2010
(33) Name of priority country :Brazil
(86) International Application No :PCT/CN2011/070870
Filing Date :01/02/2011
(87) International Publication No :WO 2011/095134
(61) Patent of Addition to Application Number :NA
Filing Date :NA
(62) Divisional to Application Number :NA
Filing Date :NA

(71)**Name of Applicant :**
1)ROTAM AGROCHEM INTERNATIONAL CO.LTD
Address of Applicant :7/FCheung Tat Centre 18 Cheung Lee Street Chai Wan Hong Kong China
(72)**Name of Inventor :**
1)BRISTOW James Timothy

(57) Abstract :
A fungicidal composition and a method for treating plants using the composition are provided. The composition comprises at least three active ingredient components (A) (B) and (C) optionally together with one or more customary formulation auxiliaries wherein component (A) is one or more triazole fungicides component (B) is one or more strobilurin fungicides and component (C) is one or more benzimidazole fungicides. Further provided is a method for preventing and/or combating pathogenic damage or pest damage in a plant or plant material which comprises applying on the plant plant material part of plant or surroundings thereof the composition comprising the active ingredient components (A) (B) and (C).

No. of Pages : 38 No. of Claims : 29

(12) PATENT APPLICATION PUBLICATION
(19) INDIA
(22) Date of filing of Application :26/07/2012
(21) Application No.6612/DELNP/2012 A
(43) Publication Date : 23/10/2015

(54) Title of the invention : WAKE-TIME-EXTENDING AGENT

(51) International classification :A61K31/047,A23L1/30,A61K45/00
(31) Priority Document No :2010067524
(32) Priority Date :24/03/2010
(33) Name of priority country :Japan
(86) International Application No :PCT/JP2011/056192
Filing Date :16/03/2011
(87) International Publication No :WO 2011/118468
(61) Patent of Addition to Application Number :NA
Filing Date :NA
(62) Divisional to Application Number :NA
Filing Date :NA

(71)**Name of Applicant :**
1)MEIJI CO. LTD.
Address of Applicant :2 10 Shinsuna 1 chome Koto ku Tokyo 1368908 Japan
(72)**Name of Inventor :**
1)UCHIDA Masayuki
2)YAMADA Naruomi
3)ITOU Hiroyuki

(57) Abstract :
Disclosed is a food beverage or medicinal material which is safe and readily available does not undergo the deterioration in flavor when combined with another food material or material is suitably applicable to foods beverages and medicinal agents and has a wake time extending activity. It is found that an oxidized carotene derivative derived from a terrestrial animal a terrestrial plant or a microorganism has an activity of shortening a sleep time and extending a wake time.

No. of Pages : 20 No. of Claims : 6

(12) PATENT APPLICATION PUBLICATION
(19) INDIA
(22) Date of filing of Application :26/07/2012
(21) Application No.6613/DELNP/2012 A
(43) Publication Date : 23/10/2015

(54) Title of the invention : SURGE PROTECTION ELEMENT

(51) International classification :H01T1/14
(31) Priority Document No :10 2010 010 980.0
(32) Priority Date :10/03/2010
(33) Name of priority country :Germany
(86) International Application No :PCT/EP2011/001145
Filing Date :09/03/2011
(87) International Publication No :WO 2011/110330
(61) Patent of Addition to Application Number :NA
Filing Date :NA
(62) Divisional to Application Number :NA
Filing Date :NA

(71)**Name of Applicant :**
1)PHOENIX CONTACT GMBH & CO. KG
Address of Applicant :Flachsmarktstrae 8 32825 Blomberg Germany
(72)**Name of Inventor :**
1)DEPPING Christian
2)LANGE Ralf
3)HORVAT Viktor

(57) Abstract :
The invention relates to a surge protection element comprising a contact stud (10) and a contact element (12) arranged spaced apart from the contact stud (10). A connection element (14) is provided which can be transferred into a first position and into a second position. In the first position the connection element (14) rests against the contact stud (10) and the contact element (12) in order to connect the contact stud (10) electrically to the contact element (12) and in the second position the connection element (14) is arranged spaced apart from the contact stud (10) and the contact element (12). In the first position a thermally separable connection is provided between the connection element (14) and the contact stud (10) and between the connection element (14) and the contact element (12) wherein in the first position the connection element (14) at least partially surrounds the contact stud (10) and/or the contact element (12).

No. of Pages : 22 No. of Claims : 14

(12) PATENT APPLICATION PUBLICATION
(21) Application No.6614/DELNP/2012 A
(19) INDIA
(22) Date of filing of Application :26/07/2012
(43) Publication Date : 23/10/2015

(54) Title of the invention : FREQUENCY DEPENDENT IQ IMBALANCE ESTIMATION

(51) International classification :H04L27/38
(31) Priority Document No :12/722666
(32) Priority Date :12/03/2010
(33) Name of priority country :U.S.A.
(86) International Application No :PCT/IB2011/050633
Filing Date :16/02/2011
(87) International Publication No :WO 2011/110964
(61) Patent of Addition to Application Number :NA
Filing Date :NA
(62) Divisional to Application Number :NA
Filing Date :NA

(71)**Name of Applicant :**
1)TELEFONAKTIEBOLAGET L M ERICSSON (PUBL)
Address of Applicant :S 164 83 Stockholm Sweden
(72)**Name of Inventor :**
1)PARK Chester
2)WILHELMSSON Leif
3)SUNDSTR–M Lars

(57) Abstract :
RF impairment parameters including frequency dependent IQ imbalance are estimated in a wideband received signal on a per sub band (or per sub band pair) basis. In one embodiment block type pilot signals are received such as on SCH and IQ imbalance and carrier frequency offset are estimated from the block type pilot signals. Data and comb type pilot signals are then received on all sub bands. Phase noise and channel coefficients are estimated for the first sub band based on the IQ imbalance and carrier frequency offset estimates. IQ imbalance is then successively estimated on a per sub band (or per sub band pair) basis based on the comb type pilot signals the previously estimated carrier frequency offset estimate and the phase noise and IQ imbalance estimates from prior sub bands (or pairs). This may comprise iterative estimation based on decision feedback.

No. of Pages : 25 No. of Claims : 23

(12) PATENT APPLICATION PUBLICATION
(21) Application No.6621/DELNP/2012 A
(19) INDIA
(22) Date of filing of Application :26/07/2012
(43) Publication Date : 23/10/2015

(54) Title of the invention : TECHNIQUE FOR SELECTING A FREQUENCY OF OPERATION IN A PROCESSOR SYSTEM

(51) International classification :G06F1/32
(31) Priority Document No :10001951.2
(32) Priority Date :25/02/2010
(33) Name of priority country :EPO
(86) International Application No :PCT/EP2011/052626
Filing Date :22/02/2011
(87) International Publication No :WO 2011/104245
(61) Patent of Addition to Application Number :NA
Filing Date :NA
(62) Divisional to Application Number :NA
Filing Date :NA

(71)**Name of Applicant :**
1)TELEFONAKTIEBOLAGET L M ERICSSON (PUBL)
Address of Applicant :S 164 83 Stockholm Sweden
(72)**Name of Inventor :**
1)GUSTAFSSON Harald

(57) Abstract :
The present disclosure relates to a technique for varying the frequency of operation of one or more cores in a processor device capable of operating at different frequencies and voltages. A method aspect of this technique includes executing one or more tasks on the at least one processor core wherein the tasks are grouped into groups monitoring usage of the at least one processor core by tasks in the groups on a per group basis aggregating the monitored usage of the at least one processor core by individual groups across the groups to derive a load parameter indicative of the combined usage of the at least one processor core by the tasks in the groups selecting a frequency of operation based upon the load parameter and changing the frequency of operation of the at least one processor core to the selected frequency of operation.

No. of Pages : 50 No. of Claims : 28

(12) PATENT APPLICATION PUBLICATION
(19) INDIA
(22) Date of filing of Application :26/07/2012
(21) Application No.6622/DELNP/2012 A
(43) Publication Date : 23/10/2015

(54) Title of the invention : CLEANING AND DEWATERING FINE COAL

(51) International classification :B03B5/28,B03B5/62
(31) Priority Document No :61/300270
(32) Priority Date :01/02/2010
(33) Name of priority country :U.S.A.
(86) International Application No :PCT/US2011/023161
Filing Date :31/01/2011
(87) International Publication No :WO 2011/094680
(61) Patent of Addition to Application Number :NA
Filing Date :NA
(62) Divisional to Application Number :NA
Filing Date :NA

(71)**Name of Applicant :**
1)VIRGINIA TECH INTELLECTUAL PROPERTIES INC.
Address of Applicant :2200 Kraft Drive Suite 1050 Blacksburg VA 24060 U.S.A.
(72)**Name of Inventor :**
1)YOON Roe Hoan
2)ERAYDIN Kerem
3)FREELAND Chad

(57) Abstract :
Fine coal is cleaned of its mineral matter impurities and dewatered by mixing the aqueous slurry containing both with a hydrophobic liquid subjecting the mixture to a phase separation. The resulting hydrophobic liquid phase contains coal particles free of surface moisture and droplets of water stabilized by coal particles while the aqueous phase contains the mineral matter. By separating the entrained water droplets from the coal particles mechanically a clean coal product of substantially reduced mineral matter and moisture contents is obtained. The spent hydrophobic liquid is separated from the clean coal product and recycled. The process can also be used to separate one type of hydrophilic particles from another by selectively hydrophobizing one.

No. of Pages : 34 No. of Claims : 35

(12) PATENT APPLICATION PUBLICATION
(21) Application No.6623/DELNP/2012 A
(19) INDIA
(22) Date of filing of Application :26/07/2012
(43) Publication Date : 23/10/2015

(54) Title of the invention : MULTI-MODE MULTI-CARD MULTI-STANDBY COMMUNICATION TERMINAL AND METHOD AND DEVICE FOR ARBITRATING RECEPTION COLLISION IN MULTI-MODE MULTI-CARD MULTI-STANDBY COMMUNICATION TERMINAL

(51) International classification :H04W88/06
(31) Priority Document No :NA
(32) Priority Date :NA
(33) Name of priority country :NA
(86) International Application No :PCT/CN2011/074548
Filing Date :24/05/2011
(87) International Publication No :WO 2012/100474
(61) Patent of Addition to Application Number :NA
Filing Date :NA
(62) Divisional to Application Number :NA
Filing Date :NA

(71)**Name of Applicant :**
1)SPREADTRUM COMMUNICATIONS(SHANGHAI) CO. LTD.
Address of Applicant :Spreadtrum Center Building No.1 Lane 2288 Zuchongzhi Road Zhangjiang Shanghai 201203 China
(72)**Name of Inventor :**
1)LI Wenjie

(57) Abstract :
A multi mode multi card multi standby communication terminal and a method and device for arbitrating a reception collision in the multi mode multi card multi standby communication terminal are disclosed in the present invention wherein the method for arbitrating a reception collision includes: when all cards are on standby after judging that receptions exist in at least two cards in a period wherein a frame of a wireless signal corresponding to an air interface of one of the cards acts as a period unit identifying the reception types of all the cards which the receptions exist in wherein the reception types include a reception of a broadcast message and a reception of a paging message; after judging that there is a reception collision arbitrating according to the type of the reception collision: if it is a collision between receptions of broadcast messages determining the receiving broadcast message according to the priority of all the broadcast messages to be received; if it is a collision between receptions of a broadcast message and a paging message receiving the paging message firstly; if it is a collision between receptions of paging messages determining the receiving paging message according to the paging period of all the paging messages to be received.

No. of Pages : 34 No. of Claims : 17

(12) PATENT APPLICATION PUBLICATION
(21) Application No.6624/DELNP/2012 A
(19) INDIA
(22) Date of filing of Application :26/07/2012
(43) Publication Date : 23/10/2015

(54) Title of the invention : FREQUENCY POINTS SEQUENCING METHOD AND DEVICE THEREOF

(51) International classification :H04W48/16
(31) Priority Document No :201010518647.5
(32) Priority Date :21/10/2010
(33) Name of priority country :China
(86) International Application No :PCT/CN2011/075082
Filing Date :01/06/2011
(87) International Publication No :WO 2012/051856
(61) Patent of Addition to Application Number :NA
Filing Date :NA
(62) Divisional to Application Number :NA
Filing Date :NA

(71)**Name of Applicant :**
1)SPREADTRUM COMMUNICATIONS(SHANGHAI) CO. LTD.
Address of Applicant :Spreadtrum Center Building No.1 Lane2288 Zuchongzhi Road Zhangjiang Shanghai 201203 China
(72)**Name of Inventor :**
1)FU Jie

(57) Abstract :
A frequency points sequencing method and a device thereof for reducing the calculation of the frequency points sequencing are provided by the embodiments of the present invention. The method includes: acquiring the strongest m frequency points in the neighboring cells as candidate frequency points wherein m is greater than 1; after a preset period acquiring all the n frequency points in the current neighboring cells; acquiring a frequency point with the weakest signal from the candidate frequency points as the weakest frequency point; selecting any one frequency point X in the n frequency points except m frequency points; comparing the frequency point X with the weakest frequency point and replacing the weakest frequency point with the frequency point X to update the candidate frequency point if a signal of the frequency point X is stronger than a signal of the weakest frequency point; judging whether all of the n frequency points except m frequency points are selected if no repeating the steps above and if yes outputting the candidate frequency points; sequencing the candidate frequency points according to the signal intensity. The device thereof for implementing the method is also provided by the embodiments of the present invention.

No. of Pages : 26 No. of Claims : 10

(12) PATENT APPLICATION PUBLICATION
(19) INDIA
(22) Date of filing of Application :23/07/2014
(21) Application No.6179/DELNP/2014 A
(43) Publication Date : 23/10/2015

(54) Title of the invention : TURBOCHARGER WITH VARIABLE TURBINE GEOMETRY HAVING GROOVED GUIDE VANES

(51) International classification :F02B37/22,F02B37/24,F01D17/16
(31) Priority Document No :61/586266
(32) Priority Date :13/01/2012
(33) Name of priority country :U.S.A.
(86) International Application No :PCT/US2013/020931
Filing Date :10/01/2013
(87) International Publication No :WO 2013/106503
(61) Patent of Addition to Application Number :NA
Filing Date :NA
(62) Divisional to Application Number :NA
Filing Date :NA

(71)**Name of Applicant :**
1)BORGWARNER INC.
Address of Applicant :Patent Department 3850 Hamlin Road Auburn Hills Michigan 48326 U.S.A.
(72)**Name of Inventor :**
1)VEMULA Rajendra
2)LOTZ Robert
3)HEDDY III George Edward

(57) Abstract :
A plurality of guide vanes (34) in a variable turbine geometry turbocharger (10) regulates a flow of exhaust gas. The guide vanes (34) are selectively adjustable between an open position to allow the flow of exhaust gas to drive a turbine wheel (24) and a closed position to block the flow of exhaust gas. A first flow feature (58) is disposed on first (44) and second (46) edges of the guide vanes (34) to disturb the flow of exhaust gas to prevent leakage of exhaust gas around the first (44) and second (46) edges. A second flow feature (64) is disposed on front (60) and rear (62) surfaces of the guide vanes (34) to channel the flow of exhaust gas between adjacent guide vanes (34) when the guide vanes (34) are in the open position to prevent swirling and/or cross flow of the exhaust gas.

No. of Pages : 16 No. of Claims : 15

(12) PATENT APPLICATION PUBLICATION
(19) INDIA
(22) Date of filing of Application :26/07/2012
(21) Application No.6630/DELNP/2012 A
(43) Publication Date : 23/10/2015

(54) Title of the invention : TREATMENT OF KERATINOUS FIBERS WITH AN ENZYME HAVING PERHYDROLASE ACTIVITY

(51) International classification :D06M11/50,D06M11/82,D06M16/00
(31) Priority Document No :61/317915
(32) Priority Date :26/03/2010
(33) Name of priority country :U.S.A.
(86) International Application No :PCT/US2011/026613
Filing Date :01/03/2011
(87) International Publication No :WO 2011/119301
(61) Patent of Addition to Application Number :NA
Filing Date :NA
(62) Divisional to Application Number :NA
Filing Date :NA

(71)**Name of Applicant :**
1)DANISCO US INC.
Address of Applicant :925 Page Mill Road Palo Alto California 94304 U.S.A.
(72)**Name of Inventor :**
1)YOON Mee Young

(57) Abstract :
Described are compositions and methods relating to the treatment of keratinous fibers and textiles comprising such fibers with enzymatically generated peracids in aqueous media. The treatment has beneficial effects including reducing felting increasing dye uptake and reducing prickling tendency.

No. of Pages : 42 No. of Claims : 17

(12) PATENT APPLICATION PUBLICATION
(19) INDIA
(22) Date of filing of Application :26/07/2012
(21) Application No.6631/DELNP/2012 A
(43) Publication Date : 23/10/2015

(54) Title of the invention : (R)-4-((4-((4-(TETRAHYDROFURAN-3-YLOXY)BENZO[D]ISOXAZOL-3-YLOXY)METHYL)PIPERIDIN-1-YL)METHYL)TETRAHYDRO-2H-PYRAN-4-OL, A PARTIAL AGONIST OF 5-HT4 RECEPTORS

(51) International classification :C07D413/14,A61K31/423,A61P25/28
(31) Priority Document No :61/304921
(32) Priority Date :16/02/2010
(33) Name of priority country :U.S.A.
(86) International Application No :PCT/IB2011/050548
Filing Date :09/02/2011
(87) International Publication No :WO 2011/101774
(61) Patent of Addition to Application Number :NA
Filing Date :NA
(62) Divisional to Application Number :NA
Filing Date :NA

(71)**Name of Applicant :**
1)PFIZER INC.
Address of Applicant :235 East 42nd Street New York New York 10017 U.S.A.
(72)**Name of Inventor :**
1)NOGUCHI Hirohide
2)WAIZUMI Nobuaki

(57) Abstract :
(R) 4 ((4 ((4 (tetrahydrofuran 3 yloxy)benzo[d]isoxazol 3 yloxy)methyl)piperidin 1 yl)methyl)tetrahydro 2H pyran 4 ol and its use in treating neurodegenerative disorders is described herein.

No. of Pages : 45 No. of Claims : 8

(12) PATENT APPLICATION PUBLICATION
(21) Application No.6632/DELNP/2012 A
(19) INDIA
(22) Date of filing of Application :26/07/2012
(43) Publication Date : 23/10/2015

(54) Title of the invention : AUTOMATIC ANALYZING SYSTEM

(51) International classification :G01N35/02,G01N35/04
(31) Priority Document No :2010016142
(32) Priority Date :28/01/2010
(33) Name of priority country :Japan
(86) International Application No :PCT/JP2011/051739
Filing Date :28/01/2011
(87) International Publication No :WO 2011/093442
(61) Patent of Addition to Application Number :NA
Filing Date :NA
(62) Divisional to Application Number :NA
Filing Date :NA

(71)**Name of Applicant :**
1)HITACHI HIGH TECHNOLOGIES CORPORATION
Address of Applicant :24 14 Nishi Shimbashi 1 chome Minato ku Tokyo 1058717 Japan
(72)**Name of Inventor :**
1)WATABE Osamu
2)AKUTSU Masashi
3)TOKIEDA Hitoshi

(57) Abstract :
Disclosed is an automatic analyzing device including a plurality of connected functional modules having different functions and processing capacities capable of achieving high analysis efficiency on the whole without causing traffic jams. Also disclosed is an automatic analyzing system that does not require consideration for influence on the existing functional modules rebuilding of conveying plans for improving the entire processing capacity and the like even when a new functional module is added. Buffer units that are paired to corresponding functional modules are connected to a subject conveying line. A computer of an operating unit issues instructions to the functional modules to convey the subjects in accordance with requests. Operations of carrying in and out the subjects are performed while the buffer units and the functional modules are managed such that the subjects can be conveyed therebetween.

No. of Pages : 54 No. of Claims : 18

(12) PATENT APPLICATION PUBLICATION
(19) INDIA
(22) Date of filing of Application :26/07/2012
(21) Application No.6633/DELNP/2012 A
(43) Publication Date : 23/10/2015

(54) Title of the invention : DRINKING BOTTLE WITH MULTIPLE COMPARTMENTS AND REPLACEABLE AMPOULES

(51) International classification :B65D81/32,A45F3/16,A61J9/00
(31) Priority Document No :20093607
(32) Priority Date :30/12/2009
(33) Name of priority country :Norway
(86) International Application No :PCT/NO2010/000492
Filing Date :30/12/2010
(87) International Publication No :WO 2011/099864
(61) Patent of Addition to Application Number :NA
Filing Date :NA
(62) Divisional to Application Number :NA
Filing Date :NA

(71)**Name of Applicant :**
1)INJECTION BOTTLE DEVELOPMENT AS
Address of Applicant :c/o Norcap Vollsveien 9 N 1366 Lysaker Norway
(72)**Name of Inventor :**
1)KNUTSEN Stian Valentin

(57) Abstract :
A drinking bottle (100) having at east one liquid reservoir (120 140) at least one replaceable substrate ampoule (200) and means for breaking a liquid proof seal (206) between the substrate ampoule (200) and the liquid reservoir. The substrate ampoule (200) comprises a drinking tube (210) with a distal drinking nipple (211) where the drinking tube (210) is disposed axially displaceable in relation to the ampoule (200) between an inner position where liquid cannot flow from the liquid reservoir (120 140) to the interior of the drinking tube (210) and an outer position where liquid can flow from the liquid reservoir (120 140) to the interior of the drinking tube (210). The drinking bottle (100) makes t possible to bring along several substrate ampoules (200) with various contents that can be mixed with liquid from the liquid reservoir (120 140). The bottle can also provide doses of liquid. As the drinking tube (210) is part of the ampoule (200) problems with cleaning a drinking tube with a drinking valve are avoided. Applications include drinks for sports administration and dosage of medication etc.

No. of Pages : 31 No. of Claims : 15

(12) PATENT APPLICATION PUBLICATION
(19) INDIA
(22) Date of filing of Application :23/07/2014
(21) Application No.6222/DELNP/2014 A
(43) Publication Date : 23/10/2015

(54) Title of the invention : POWER CONVERTER WITH DIGITAL CURRENT CONTROL CIRCUIT

(51) International classification :H02M1/00
(31) Priority Document No :NA
(32) Priority Date :NA
(33) Name of priority country :NA
(86) International Application No :PCT/IB2012/000163
Filing Date :05/01/2012
(87) International Publication No :WO 2013/102780
(61) Patent of Addition to Application Number :NA
Filing Date :NA
(62) Divisional to Application Number :NA
Filing Date :NA

(71)**Name of Applicant :**
1)AMERICAN POWER CONVERSION CORPORATION
Address of Applicant :132 Fairgrounds Road West Kingston Rhode Island 02892 U.S.A.
(72)**Name of Inventor :**
1)BERARD Olivier

(57) Abstract :
A current control circuit (208) for a power converter (200) to control the switching thereof wherein the current control circuit comprises a digital controller (210) using a logical input signal (226) to produce a logical control signal (212) with a fixed fundamental frequency for the power converter.

No. of Pages : 22 No. of Claims : 21

(12) PATENT APPLICATION PUBLICATION
(19) INDIA
(22) Date of filing of Application :23/07/2014
(21) Application No.6223/DELNP/2014 A
(43) Publication Date : 23/10/2015

(54) Title of the invention : CONVERTER CONTROLLER WITH HALF BRIDGE ADAPTIVE DEAD TIME CIRCUIT AND METHOD

(51) International classification :H02M1/38
(31) Priority Document No :NA
(32) Priority Date :NA
(33) Name of priority country :NA
(86) International Application No :PCT/IB2012/000164
Filing Date :05/01/2012
(87) International Publication No :WO 2013/102781
(61) Patent of Addition to Application Number :NA
Filing Date :NA
(62) Divisional to Application Number :NA
Filing Date :NA

(71)**Name of Applicant :**
1)AMERICAN POWER CONVERSION CORPORATION
Address of Applicant :132 Fairgrounds Road West Kingston Rhode Island 02892 U.S.A.
(72)**Name of Inventor :**
1)ROZAND Daniel
2)CHAMBON Patrick
3)DE CESARIS Stefano

(57) Abstract :
The present disclosure relates to a controller a circuit and method for controlling a power converter using pulse width modulation (PWM). At least one logic block (13 15 16) of the controller is configured to re¬ move a command (4) which is configured to control the other power semiconductor switch (2) in a half bridge (1 2) so that the other power semiconductor switch (2) remains in a non conductive state while an antiparallel diode (6) allows an electric current (5) to pass in one direction called the diode s forward direction while blocking current in the opposite direction. In case the diode (6) is conducting instead of the other power semiconductor switch during the duration of the state of the command the switching command (4) for the latter is omitted. The controller is further configured to modify the dead time interval (Tdead) between switching from the power semiconductor switch (3) to another power semiconductor switch (4) or vice versa in order to avoid a discontinuity in the transfer function (25).

No. of Pages : 31 No. of Claims : 16

(12) PATENT APPLICATION PUBLICATION
(19) INDIA
(22) Date of filing of Application :23/07/2014
(21) Application No.6224/DELNP/2014 A
(43) Publication Date : 23/10/2015

(54) Title of the invention : METHODS AND APPARATUS FOR CONTROLLING POWER CONVERTERS IN PARALLEL CONNECTION

(51) International classification :H02J3/46
(31) Priority Document No :NA
(32) Priority Date :NA
(33) Name of priority country :NA
(86) International Application No :PCT/IB2012/000165
Filing Date :05/01/2012
(87) International Publication No :WO 2013/102782
(61) Patent of Addition to Application Number :NA
Filing Date :NA
(62) Divisional to Application Number :NA
Filing Date :NA

(71)**Name of Applicant :**
1)AMERICAN POWER CONVERSION CORPORATION
Address of Applicant :132 Fairgrounds Road West Kingston Rhode Island 02892 U.S.A.
(72)**Name of Inventor :**
1)ROZAND Daniel
2)CHAMBON Patrick
3)DE CESARIS Stefano

(57) Abstract :
An uninterruptible power supply (UPS) system (100) comprises a plurality of UPS units (UPS 1 UPS 2) connected in parallel. Each UPS unit comprises a power converter (124) for supplying a share (i load l i_load_2) of a total load current (i_tot). The total load is shared automatically between UPS units of power ratings in a proportionate manner. A controller 130 of each converter is arranged to establish real time feedback control of a current supplied by the power converter. An exchange current (i_exch) for each converter represents an imbalance between an output current of the converter in question and output currents of the parallel converters. Exchange current sensing circuits of the parallel connected UPS units are connected together. The controller steers the exchange current of each converter toward a value (i_ exc_c) that is a non zero proportion of a current (i_mut) sensed within the converter. Said non zero proportion is calculated such that the exchange current will be steered towards a positive value in the case of a converter with higher than average nominal power rating and toward a negative value in the case of a converter with lower than average power rating.

No. of Pages : 23 No. of Claims : 19

(12) PATENT APPLICATION PUBLICATION
(19) INDIA
(22) Date of filing of Application :30/07/2012
(21) Application No.6694/DELNP/2012 A
(43) Publication Date : 23/10/2015

(54) Title of the invention : MUTANT AOX 1 PROMOTERS

(51) International classification :B01D53/96,B01D53/14,
(31) Priority Document No :A 304/2005
(32) Priority Date :23/02/2005
(33) Name of priority country :Austria
(86) International Application No :PCT/AT2006/000079
Filing Date :23/02/2006
(87) International Publication No :WO 2011/069264
(61) Patent of Addition to Application Number :NA
Filing Date :NA
(62) Divisional to Application Number :6085/DELNP/2007
Filed on :23/02/2006

(71)**Name of Applicant :**
1)TECHNISCHE UNIVERSITAT GRAZ
Address of Applicant :RECHBAUERSTRASSE 12, A-8010 GRAZ AUSTRIA. Austria
2)VTU EQUITY HOLDING GMBH,
(72)**Name of Inventor :**
1)HARTNER FRANZ
2)GLIEDER ANTON

(57) Abstract :
A mutant Pichia pastoris alcohol oxidase 1 (AOX1) promoter of the wild type Pichia pastoris AOX1 promoter (SEQ ID No. 1) comprising at least one mutation selected from the group consisting of: a) a transcription factor binding site (TFBS), b) nucleotides 170 to 235 (-784 to -719), nucleotides 170 to 191 (-784 to -763), nucleotides 192 to 213 (-762 to -741) , nucleotides 192 to 210 (-762 to -744), nucleotides 207 to 209 (-747 to -745), nucleotides 214 to 235 (-740 to -719), nucleotides 304 to 350 (-650 to -604), nucleotides 364 to 393 (-590 to -561), nucleotides 434 to 508 (-520 to -446), nucleotides 509 to 551 (445 to -403), nucleotides 552 to 560 (-402 to -394), nucleotides 585 to 617 (-369 to -337), nucleotides 621 to 660 (-333 to -294), nucleotides 625 to 683 (-329 to -271), nucleotides 736 to 741 (-218 to -213), nucleotides 737 to 738 (-217 to -216), nucleotides 726 to 755 (-228 to -199), nucleotides 784 to 800 (-170 to -154) or nucleotides 823 to 861 (-131 to -93) of Seq ID No. 1, and combinations thereof.

No. of Pages : 94 No. of Claims : 19

(12) PATENT APPLICATION PUBLICATION
(19) INDIA
(22) Date of filing of Application :23/07/2014
(21) Application No.6227/DELNP/2014 A
(43) Publication Date : 23/10/2015

(54) Title of the invention : LEAD ACID BATTERY DESIGN HAVING VERSATILE FORM FACTOR

(51) International classification :H01M2/02,H02J7/00
(31) Priority Document No :13/350686
(32) Priority Date :13/01/2012
(33) Name of priority country :U.S.A.
(86) International Application No :PCT/US2013/021287
Filing Date :11/01/2013
(87) International Publication No :WO 2013/106748
(61) Patent of Addition to Application Number :NA
Filing Date :NA
(62) Divisional to Application Number :NA
Filing Date :NA

(71)**Name of Applicant :**
1)ENERGY POWER SYSTEMS LLC
Address of Applicant :711 Stephenson Highway Troy MI 48083 1128 U.S.A.
(72)**Name of Inventor :**
1)DHAR Subhash
2)KOETTING William
3)TOM Kwok
4)MARTIN Franklin
5)ESPINEL Jorge
6)NIELSON Michael
7)ALBANO Fabio

(57) Abstract :
An electrochemical storage device comprises a plurality of layer electrodes wherein each layer electrode includes a first charged sector and a second charged sector wherein the second charged sector is charged oppositely compared to the first charged sector and wherein the plurality of layer electrodes are assembled with respect to each other such that the first charged sector of a first plate of the plurality of layer electrodes is laid below the second charged sector of a second plate of the plurality of layer electrodes located immediately above the first plate wherein the charges of the first charged sectors of the first and second plates have a first sign and the charges of the second charged sectors of the first and second plates have a second sign that is opposite the first sign; a separator sector located and enabling ionic charge exchange between the first charged sector of the first plate and the second charged sector of the second plate.

No. of Pages : 116 No. of Claims : 41

(12) PATENT APPLICATION PUBLICATION
(19) INDIA
(22) Date of filing of Application :23/07/2014
(21) Application No.6228/DELNP/2014 A
(43) Publication Date : 23/10/2015

(54) Title of the invention : INKJET INK

(51) International classification :C09D11/00,C09D11/02
(31) Priority Document No :NA
(32) Priority Date :NA
(33) Name of priority country :NA
(86) International Application No :PCT/US2012/034764
Filing Date :24/04/2012
(87) International Publication No :WO 2013/162513
(61) Patent of Addition to Application Number :NA
Filing Date :NA
(62) Divisional to Application Number :NA
Filing Date :NA

(71)**Name of Applicant :**
1)HEWLETT PACKARD DEVELOPMENT COMPANY L.P.
Address of Applicant :11445 Compaq Center Drive W. Houston Texas 77070 U.S.A.
(72)**Name of Inventor :**
1)KASPERCHIK Vladek
2)RUUD Cory J.
3)JAKUBEK Vladimir

(57) Abstract :
An inkjet ink includes a pigment incorporated in an aqueous ink vehicle. The pigment includes metal oxide and/or mixed metal oxide particles and a plurality of reacted dispersant molecules attached to the outer surfaces of the particles to form a coating on the outer surfaces. The reacted dispersant molecules are attached to the metal oxide and/or mixed metal oxide particle outer surfaces through a silanol linking group of the reacted dispersant molecules. The coating is present in an amount ranging from about 10 wt% to about 50 wt% with respect to the wt% of the metal oxide and/or mixed metal oxide particles.

No. of Pages : 36 No. of Claims : 15

(12) PATENT APPLICATION PUBLICATION
(21) Application No.6229/DELNP/2014 A
(19) INDIA
(22) Date of filing of Application :23/07/2014
(43) Publication Date : 23/10/2015

(54) Title of the invention : CHARGING OF CALLS IN A COMMUNICATION NETWORK

(51) International classification :H04M15/00,H04M15/08
(31) Priority Document No :12305108.8
(32) Priority Date :27/01/2012
(33) Name of priority country :EPO
(86) International Application No :PCT/EP2012/077047
Filing Date :28/12/2012
(87) International Publication No :WO 2013/110426
(61) Patent of Addition to Application Number :NA
Filing Date :NA
(62) Divisional to Application Number :NA
Filing Date :NA

(71)**Name of Applicant :**
1)ALCATEL LUCENT
Address of Applicant :148/152 route de la Reine F 92100 Boulogne Billancourt France
(72)**Name of Inventor :**
1)GUPTA Varun G

(57) Abstract :
The present subject matter relates to a method for charging of calls in a communication network. The method includes receiving subscription information pertaining to a discretionary charging feature for a call between a first user and a second user where the first user is subscribed to a first telecom operator and the second user is subscribed to one of the first telecom operator and a second telecom operator. The method further includes ascertaining whether the second user is subscribed to the discretionary charging feature based on the receiving and applying discretionary charging for determining call charges for the first user based on the ascertaining.

No. of Pages : 38 No. of Claims : 15

(12) PATENT APPLICATION PUBLICATION
(19) INDIA
(22) Date of filing of Application :30/07/2012
(21) Application No.6688/DELNP/2012 A
(43) Publication Date : 23/10/2015

(54) Title of the invention : BLOOD FLOW RESTORATION AND THROMBUS MANAGEMENT

(51) International classification :A61B17/22
(31) Priority Document No :12/651353
(32) Priority Date :31/12/2009
(33) Name of priority country :U.S.A.
(86) International Application No :PCT/US2010/062532
Filing Date :30/12/2010
(87) International Publication No :WO 2011/082319
(61) Patent of Addition to Application Number :NA
Filing Date :NA
(62) Divisional to Application Number :NA
Filing Date :NA

(71)**Name of Applicant :**
1)COVIDIEN LP
Address of Applicant :15 HAMPSHIRE STREET, MANSFIELD, MASSACHUSETTS 02048 UNITED STATES OF AMERICA, U.S.A.
(72)**Name of Inventor :**
1)FERRERA David A.
2)CRAGG Andrew H.
3)FULKERSON John
4)BENJAMIN Joshua

(57) Abstract :
Systems methods and devices for the treatment of acute ischemic stroke that provide immediate blood flow restoration to a vessel occluded by a clot and after reestablishing blood flow address the clot itself. Immediate blood flow restoration advantageously can facilitate natural lysis of the clot and also can reduce or obviate the concern for distal embolization due to fragmentation of the clot. Several embodiments of the invention provide for progressive or modular treatment based upon the nature of the clot. For example the progressive treatment can comprise a three step progressive treatment process that includes immediate restoration of blood flow in situ clot management and/or clot removal depending on the particular circumstances of the treatment. The in situ clot management can include for example lysis and maceration. The progressive or modular treatment can be provided by a system or kit of one or more treatment devices.

No. of Pages : 185 No. of Claims : 104

(12) PATENT APPLICATION PUBLICATION
(21) Application No.6562/DELNP/2012 A
(19) INDIA
(22) Date of filing of Application :25/07/2012
(43) Publication Date : 23/10/2015

(54) Title of the invention : NOVEL PROCESS FOR THE PREPARATION OF NITROGEN SUBSTITUTED AMINOTETRALINS DERIVATIVES

(51) International classification :C07C
(31) Priority Document No :61/301,741
(32) Priority Date :05/02/2010
(33) Name of priority country :U.S.A.
(86) International Application No :PCT/EP2011/051549
Filing Date :03/02/2011
(87) International Publication No :WO 2011/095539
(61) Patent of Addition to Application Number :NA
Filing Date :NA
(62) Divisional to Application Number :NA
Filing Date :NA

(71)**Name of Applicant :**
1)UCB PHARMA GMBH
Address of Applicant :Alfred-Nobel-Strasse 10 40789 Monheim Germany
(72)**Name of Inventor :**
1)DAVID VASSELIN
2)NICOLAS CARLY
3)C‰LAL ATES

(57) Abstract :
The present invention provides an alternative synthesis of N-substituted aminotetralines which synthesis comprises catalytic asymmetric hydrogenation of compounds of general formula (A).

No. of Pages : 19 No. of Claims : 13

(12) PATENT APPLICATION PUBLICATION
(21) Application No.6563/DELNP/2012 A
(19) INDIA
(22) Date of filing of Application :25/07/2012
(43) Publication Date : 23/10/2015

(54) Title of the invention : SYSTEM AND METHOD FOR ACCURATELY DIRECTING ANTENNAS •

(51) International classification :G01N
(31) Priority Document No :203105
(32) Priority Date :31/12/2009
(33) Name of priority country :Israel
(86) International Application No :PCT/IL2010/001094
Filing Date :30/12/2010
(87) International Publication No :WO 2011/080742
(61) Patent of Addition to Application Number :NA
Filing Date :NA
(62) Divisional to Application Number :NA
Filing Date :NA

(71)**Name of Applicant :**
1)TOMAR BRUCHIEL
Address of Applicant :99 Ben Gurion Blvd. 58017 Azor Israel
(72)**Name of Inventor :**
1)TOMAR BRUCHIEL

(57) Abstract :
A system for accurately directing a directional antenna. The system may include a calibration system for finding the current azimuth of the antenna and a rotation sensor attached to the antenna for measuring deviations from the current azimuth of the antenna. The calibration system includes first and second GPS recievers and a rotatable optical means, the rotatable optical means positioned adjacent to the antenna and coupled to a meter for measuring the angle between the current direction and the direction to a visible object for positioning the antenna.

No. of Pages : 27 No. of Claims : 20

(12) PATENT APPLICATION PUBLICATION
(19) INDIA
(22) Date of filing of Application :25/07/2012
(21) Application No.6564/DELNP/2012 A
(43) Publication Date : 23/10/2015

(54) Title of the invention : ENGINE WORTHY FATTY ACID METHYL ESTER (BIODIESEL) FROM NATURALLY OCCURRING MARINE MICROALGAL MATS AND MARINE MICROALGAE CULTURED IN OPEN SALT PANS TOGETHER WITH VALUE ADDITION OF CO PRODUCTS

(51) International classification :C12Q
(31) Priority Document No :1507/DEL/2011
(32) Priority Date :26/05/2011
(33) Name of priority country :India
(86) International Application No :PCT/IN2012/000372
Filing Date :28/05/2012
(87) International Publication No :WO 2012/160577
(61) Patent of Addition to Application Number :NA
Filing Date :NA
(62) Divisional to Application Number :NA
Filing Date :NA

(71)**Name of Applicant :**
1)COUNCIL OF SCIENTIFIC & INDUSTRIAL RESEARCH
Address of Applicant :[An Indian Registered body incorporated under the Registration of Societies Act (Act XXI of 1860] Anusandhan Bhawan Rafi Marg New Delhi 110001 Delhi India
(72)**Name of Inventor :**
1)MISHRA Sandhya Chandrika Prasad
2)GHOSH Pushpito Kumar
3)GANDHI Mahesh Ramniklal
4)BHATTACHARYA Sourish
5)MAITI Subarna
6)UPADHYAY Sumesh Chandra
7)GHOSH Arup
8)PRASAD Rachapudi Badari Narayana
9)KANJILAL Sanjit
10)MISHRA Sanjiv Kumar
11)SHRIVASTAV Anupama Vijaykumar
12)PANCHA Imran
13)PALIWAL Chetan
14)GHOSH Tonmoy
15)MAURYA Rahul Kumar
16)JAIN Deepti
17)PATIDAR Shailesh Kumar
18)SAHU Abhidhek
19)BOSAMIYA Hetal
20)ZALA Krushnadevsinh

(57) Abstract :
The invention teaches the obtained specifications and process of production of engine worthy marine microalgal fatty acid methyl ester (biodiesel) using naturally occurring marine microalgal mats and also marine microalgae cultivated in cost effective manner in solar salt pans. Utility of co product streams adds to the attractiveness of the invention.

No. of Pages : 29 No. of Claims : 24

(12) PATENT APPLICATION PUBLICATION
(19) INDIA
(22) Date of filing of Application :25/07/2012
(21) Application No.6565/DELNP/2012 A
(43) Publication Date : 23/10/2015

(54) Title of the invention : OXIDATION SYSTEM WITH SIDEDRAW SECONDARY REACTOR

(51) International classification :C07C
(31) Priority Document No :61/299,453
(32) Priority Date :29/01/2010
(33) Name of priority country :U.S.A.
(86) International Application No :PCT/US2010/059644
Filing Date :09/12/2010
(87) International Publication No :WO 2011/093950
(61) Patent of Addition to Application Number :NA
Filing Date :NA
(62) Divisional to Application Number :NA
Filing Date :NA

(71)**Name of Applicant :**
1)GRUPO PETROTEMEX S.A. DE C.V.
Address of Applicant :Ricardo Margain No. 444 Torre sur Piso 16 CoI. Valle del Campestre San Pedro Garza Garcia Nuevo Leon 66265 Mexico Mexico
(72)**Name of Inventor :**
1)ASHFAQ SHAIKH
2)ALAN GEORGE WONDERS

(57) Abstract :
Disclosed are process and apparatus for vertical splitting of the oxygen supply to a post-oxidation reactor. Further disclosed are process and apparatus for supplying reaction medium to a post-oxidation reactor at a mid-level inlet. Such apparatus and process can assist in reducing oxygen pinch throughout the post-oxidation reactor.

No. of Pages : 52 No. of Claims : 18

(12) PATENT APPLICATION PUBLICATION
(19) INDIA
(22) Date of filing of Application :31/07/2012
(21) Application No.6720/DELNP/2012 A
(43) Publication Date : 23/10/2015

(54) Title of the invention : ANTIBODY FORMULATION AND THERAPEUTIC REGIMENS

(51) International classification	:A61K39/395,C07K16/28,A61P17/06
(31) Priority Document No	:61/295387
(32) Priority Date	:15/01/2010
(33) Name of priority country	:U.S.A.
(86) International Application No	:PCT/US2011/020985
Filing Date	:12/01/2011
(87) International Publication No	:WO 2011/088120
(61) Patent of Addition to Application Number	:NA
Filing Date	:NA
(62) Divisional to Application Number	:NA
Filing Date	:NA

(71)**Name of Applicant :**
1)KIRIN AMGEN INC
Address of Applicant :c/o Amgen Inc. Law Department One Amgen Center Drive Thousand Oaks California 91320 1799 U.S.A.
(72)**Name of Inventor :**
1)LIU Dingjiang
2)HUANG Holly Zhuohong
3)MARTIN David Andrew
4)RUSSELL Christopher Boyd
5)SALINGER David H.
6)BAUMGARTNER Scott Walter
7)ENDRES Christopher J.

(57) Abstract :
The present disclosure relates to AM 14 pharmaceutical formulations and therapeutic dosing regimens for the treatment of disease.

No. of Pages : 259 No. of Claims : 16

(12) PATENT APPLICATION PUBLICATION
(19) INDIA
(22) Date of filing of Application :31/07/2012
(21) Application No.6723/DELNP/2012 A
(43) Publication Date : 23/10/2015

(54) Title of the invention : SUPERHARD TOOL TIP METHOD FOR MAKING SAME AND TOOL COMPRISING SAME

(51) International classification :B22F7/06,C22C26/00,B22F7/08
(31) Priority Document No :1002375.2
(32) Priority Date :12/02/2010
(33) Name of priority country :U.K.
(86) International Application No :PCT/EP2011/052034
Filing Date :11/02/2011
(87) International Publication No:WO 2011/098559
(61) Patent of Addition to Application Number :NA
Filing Date :NA
(62) Divisional to Application Number :NA
Filing Date :NA

(71)**Name of Applicant :**
1)ELEMENT SIX ABRASIVES S.A.
Address of Applicant :9 Rue Sainte Zithe L 2763 Luxembourg Luxembourg
2)ELEMENT SIX LIMITED
(72)**Name of Inventor :**
1)JONKER Cornelis Roelof
2)FRIES Robert
3)KASONDE Maweja
4)BARRY John James

(57) Abstract :
A tip (20) for a rotary machine tool comprising a superhard structure (12) joined to a cemented carbide substrate14by means of at least one intermediate layer (161 62 163) disposed between the superhard structure (12) and the cemented carbide substrate (14) the intermediate layer or layers (161 162 163) comprising grains of superhard material and grains of a metal carbide material dispersed in a metal binder material.

No. of Pages : 34 No. of Claims : 15

(12) PATENT APPLICATION PUBLICATION
(21) Application No.6724/DELNP/2012 A
(19) INDIA
(22) Date of filing of Application :31/07/2012
(43) Publication Date : 23/10/2015

(54) Title of the invention : VIBRATION DAMPING DEVICE

(51) International classification :F16F13/26,F16F13/06,F16F13/18
(31) Priority Document No :P2010026770
(32) Priority Date :09/02/2010
(33) Name of priority country :Japan
(86) International Application No :PCT/JP2011/051301
Filing Date :25/01/2011
(87) International Publication No :WO 2011/099357
(61) Patent of Addition to Application Number :NA
Filing Date :NA
(62) Divisional to Application Number :NA
Filing Date :NA

(71)**Name of Applicant :**
1)BRIDGESTONE CORPORATION
Address of Applicant :10 1 Kyobashi 1 chome Chuo ku Tokyo 1048340 Japan
(72)**Name of Inventor :**
1)UEKI Akira
2)YANAGIDA Motohiro

(57) Abstract :
A vibration damping device is provided with: an elastic body which connects a first mounting member and a second mounting member which have a tubular shape; and a partition member (8) which partitions the liquid chamber within the first mounting member the liquid chamber being filled with liquid into a primary liquid chamber on one side and a secondary liquid chamber on the other side. The partition member (8) is provided with: limiting passages (70 71) which cause the primary liquid chamber and the secondary liquid chamber to communicate with each other and which cause the input of vibration to generate liquid column resonance to thereby damp and reduce the vibration; switching means (1072 2072) which switch between the resonance frequencies of the limiting passages (70 71); a connection passage (74) which connects the primary liquid chamber and the secondary liquid chamber; a liquid pressure introducing passage (47) which communicates with the connection passage (74) and introduces the liquid pressure within the connection passage (74) into the switching means (1072 2072) to operate the switching means (1072 2072); and a thin film body (73) which is provided within the connection passage (74) and which blocks the communication between the primary liquid chamber and the secondary liquid chamber performed through the connection passage (74).

No. of Pages : 70 No. of Claims : 11

(12) PATENT APPLICATION PUBLICATION
(19) INDIA
(22) Date of filing of Application :23/07/2014
(21) Application No.6187/DELNP/2014 A
(43) Publication Date : 23/10/2015

(54) Title of the invention : EXHAUST GAS TURBOCHARGER

(51) International classification :F02B39/00,F02B39/12,F02B37/00
(31) Priority Document No :102012005278.2
(32) Priority Date :15/03/2012
(33) Name of priority country :Germany
(86) International Application No :PCT/US2013/029238
Filing Date :06/03/2013
(87) International Publication No :WO 2013/138120
(61) Patent of Addition to Application Number :NA
Filing Date :NA
(62) Divisional to Application Number :NA
Filing Date :NA

(71)**Name of Applicant :**
1)BORGWARNER INC.
Address of Applicant :Patent Department 3850 Hamlin Road Auburn Hills MI 48326 U.S.A.
(72)**Name of Inventor :**
1)LAENGLER Frank

(57) Abstract :
The invention relates to an exhaust gas turbocharger (1) having a shaft (2) having a turbine wheel (5) which is fastened to the shaft (2) and having a heat throttle (8) between the shaft (2) and the turbine wheel wherein an end face (3) of the shaft (2) is provided with a protrusion (4) which comprises an outside diameter (A4) which is smaller than the outside diameter (A2) of the shaft (2) the turbine wheel (5) has a hollow receiving portion (7) which is formed integrally on the wheel rear side (6) thereof and the inside diameter (I7) of which corresponds to the outside diameter (A4) of the protrusion (4) and the outside diameter (A7) of which corresponds to the outside diameter (A2) of the shaft (2) wherein the protrusion (4) engages into the receiving portion (7) and the heat throttle (8) is formed by a cavity (8A 8B) which has an outside diameter (A8) which is smaller than the outside diameter (A4) of the protrusion (4) and which extends from the protrusion (4) into the receiving portion (7).

No. of Pages : 9 No. of Claims : 10

(12) PATENT APPLICATION PUBLICATION
(21) Application No.6188/DELNP/2014 A
(19) INDIA
(22) Date of filing of Application :23/07/2014
(43) Publication Date : 23/10/2015

(54) Title of the invention : BEVERAGE FORMING DEVICE AND METHOD WITH MULTI PART BEVERAGE CARTRIDGE HOLDER

(51) International classification :A47J31/36
(31) Priority Document No :61/597002
(32) Priority Date :09/02/2012
(33) Name of priority country :U.S.A.
(86) International Application No :PCT/US2013/024604
Filing Date :04/02/2013
(87) International Publication No :WO 2013/119497
(61) Patent of Addition to Application Number :NA
Filing Date :NA
(62) Divisional to Application Number :NA
Filing Date :NA

(71)**Name of Applicant :**
1)KEURIG GREEN MOUNTAIN INC.
Address of Applicant :33 Coffee Lane Waterbury Vermont 05676 8900 U.S.A.
(72)**Name of Inventor :**
1)SULLIVAN Kevin P.
2)TINKLER Ian
3)SHEPARD James E.

(57) Abstract :
A beverage forming system and method in which a wall member mounted to a frame (6) of the system defines a first portion of a chamber and a cartridge holder (3) movably mounted relative to the frame and the wall member (48) defines a second portion of the chamber. The cartridge holder may have an opening to receive a cartridge (1) and be arranged to hold and move a cartridge between an open position and a closed position. A cover (4) which may be moveable relative to the wall member and/or the cartridge holder may be arranged to cover the opening (3a) of the cartridge holder with the cartridge holder in the closed position. Thus with the cartridge holder in the closed position and the cover (4) covering the opening the cartridge holder the wall member and the cover define the chamber in a closed state in which a cartridge held by the cartridge holder is enclosed.

No. of Pages : 50 No. of Claims : 34

(12) PATENT APPLICATION PUBLICATION
(21) Application No.6189/DELNP/2014 A
(19) INDIA
(22) Date of filing of Application :23/07/2014
(43) Publication Date : 23/10/2015

(54) Title of the invention : BEVERAGE FORMING DEVICE AND METHOD WITH MOVING BEVERAGE CARTRIDGE HOLDER

(51) International classification :A47J31/36
(31) Priority Document No :61/596997
(32) Priority Date :09/02/2012
(33) Name of priority country :U.S.A.
(86) International Application No :PCT/US2013/024597
Filing Date :04/02/2013
(87) International Publication No :WO 2013/119495
(61) Patent of Addition to Application Number :NA
Filing Date :NA
(62) Divisional to Application Number :NA
Filing Date :NA

(71)**Name of Applicant :**
1)KEURIG GREEN MOUNTAIN INC.
Address of Applicant :33 Coffee Lane Waterbury Vermont 05676 8900 U.S.A.
(72)**Name of Inventor :**
1)SMITH Geoffrey Y.
2)SHEPARD James E.
3)TINKLER Ian

(57) Abstract :
Method and apparatus for receiving moving and holding a cartridge. A cartridge holder (3) may be movable between an open position in which the cartridge holder (3) is in an upwardly inclined orientation to receive a cartridge (1) and a closed position in which the cartridge holder (3) is in a downwardly inclined orientation. A cover (4) may be arranged to at least partially cover the opening of the cartridge holder with the cartridge holder (3) in the closed position yet be positioned away from the opening with the cartridge holder in the open position.

No. of Pages : 97 No. of Claims : 55

(12) PATENT APPLICATION PUBLICATION
(19) INDIA
(22) Date of filing of Application :23/07/2014
(21) Application No.6191/DELNP/2014 A
(43) Publication Date : 23/10/2015

(54) Title of the invention : COMPOSITIONS AND METHODS FOR SURFACE TREATMENT WITH LIPASES

(51) International classification :C11D3/386,C12N9/20
(31) Priority Document No :12000745.5
(32) Priority Date :03/02/2012
(33) Name of priority country :EPO
(86) International Application No :PCT/US2013/023728
Filing Date :30/01/2013
(87) International Publication No :WO 2013/116261
(61) Patent of Addition to Application Number :NA
Filing Date :NA
(62) Divisional to Application Number :NA
Filing Date :NA

(71)**Name of Applicant :**
1)THE PROCTER & GAMBLE COMPANY
Address of Applicant :One Procter & Gamble Plaza Cincinnati Ohio 45202 U.S.A.
(72)**Name of Inventor :**
1)LANT Neil Joseph
2)ERLANDSEN Luise
3)HANSEN Carsten Hoerslev
4)VIND Jesper
5)SVENDSEN Allan
6)SONKSEN Carsten Peter

(57) Abstract :
Methods and compositions for treating textiles and hard surfaces with compositions having specific lipases are described. The compositions have increased stability to oxidative degradation in particular due to bleach catalysts.

No. of Pages : 89 No. of Claims : 15

(12) PATENT APPLICATION PUBLICATION
(19) INDIA
(22) Date of filing of Application :23/07/2014
(21) Application No.6192/DELNP/2014 A
(43) Publication Date : 23/10/2015

(54) Title of the invention : METHODS AND INTERMEDIATES FOR PREPARING PHARMACEUTICAL AGENTS

(51) International classification	:C07C271/12,C07C271/16,C07C271/20
(31) Priority Document No	:61/594686
(32) Priority Date	:03/02/2012
(33) Name of priority country	:U.S.A.
(86) International Application No	:PCT/US2013/024431
Filing Date	:01/02/2013
(87) International Publication No	:WO 2013/116715
(61) Patent of Addition to Application Number	:NA
Filing Date	:NA
(62) Divisional to Application Number	:NA
Filing Date	:NA

(71)**Name of Applicant :**
1)GILEAD SCIENCES INC.
Address of Applicant :333 Lakeside Drive Foster City CA 94404 U.S.A.
(72)**Name of Inventor :**
1)CULLEN Aaron J.
2)YU Richard Hung Chiu

(57) Abstract :
Methods and intermediates useful for preparing a compound of formula I and salts thereof.

No. of Pages : 85 No. of Claims : 17

(12) PATENT APPLICATION PUBLICATION
(19) INDIA
(22) Date of filing of Application :23/07/2014
(21) Application No.6193/DELNP/2014 A
(43) Publication Date : 23/10/2015

(54) Title of the invention : METHOD OF PRODUCING ALCOHOLS

(51) International classification :C07C29/147
(31) Priority Document No :NA
(32) Priority Date :NA
(33) Name of priority country :NA
(86) International Application No :PCT/US2012/024382
Filing Date :08/02/2012
(87) International Publication No :WO 2013/119230
(61) Patent of Addition to Application Number :NA
Filing Date :NA
(62) Divisional to Application Number :NA
Filing Date :NA

(71)**Name of Applicant :**
1)SAJET DEVELOPMENT LLC
Address of Applicant :1000 Louisiana Street Suite 4300 Houston TX 77002 U.S.A.
(72)**Name of Inventor :**
1)MILLER Jorge
2)KLING MILLER Luisa

(57) Abstract :
A method of making alcohols involves forming of alcohol esters from liquid alkane halides and a solution of metallic salts of organic acids to produce gaseous alcohol esters for reaction with magnesium or metal hydroxides to form the alcohol and the metal salt of the organic acids. In an improvement method liquid phase alcohol esters instead of gaseous alcohol esters are produced from liquid alkane halides and a solution of metal salts of organic acids whose alkane esters are less soluble in water than that of the alkane halide and treating of the alcohol ester formed with magnesium or metal hydroxides to form the alcohol and the metal salt of the organic acids.

No. of Pages : 29 No. of Claims : 10

(12) PATENT APPLICATION PUBLICATION
(19) INDIA
(22) Date of filing of Application :27/07/2012
(21) Application No.6655/DELNP/2012 A
(43) Publication Date : 23/10/2015

(54) Title of the invention : PYRAZOLE MICROBIOCIDES

(51) International classification :C07D231/14,A01N43/36
(31) Priority Document No :10153924.5
(32) Priority Date :18/02/2010
(33) Name of priority country :EPO
(86) International Application No :PCT/EP2011/051538
Filing Date :03/02/2011
(87) International Publication No :WO 2011/101256
(61) Patent of Addition to Application Number :NA
Filing Date :NA
(62) Divisional to Application Number :NA
Filing Date :NA

(71)**Name of Applicant :**
1)SYNGENTA PARTICIPATIONS AG
Address of Applicant :Schwarzwaldallee 215 CH 4058 Basel Switzerland
(72)**Name of Inventor :**
1)STIERLI Daniel
2)WALTER Harald

(57) Abstract :
Compounds of formula (I) wherein R is C Calkyl or C Chaloalkyl; R is C Calkyl; R is hydrogen or halogen; R is hydrogen C Calkyl or C Chaloalkyl; R is hydrogen halogen C Calkyl or C Chaloalkyl; G is a cyclohexenyl group which is mono or polysubstituted by substituents selected from the group consisting of C Calkyl C Calkoxy C Ccycloalkyl and phenyl; said cyclohexenyl group can form together with a C Calkylene group a bicyclic system which can be mono or polysubstituted by by substituents selected from the group consisting of C Calkyl C Calkoxy C Ccycloalkyl and phenyl; are suitable for use as microbiocides.

No. of Pages : 58 No. of Claims : 12

(12) PATENT APPLICATION PUBLICATION
(21) Application No.6677/DELNP/2012 A
(19) INDIA
(22) Date of filing of Application :30/07/2012
(43) Publication Date : 23/10/2015

(54) Title of the invention : SUNSCREEN COMPOSITIONS COMPRISING AN ULTRAVIOLET RADITATION-ABSORBING POLYMER

(51) International classification :C08F
(31) Priority Document No :61/302,219
(32) Priority Date :08/02/2010
(33) Name of priority country :U.S.A.
(86) International Application No :PCT/US2011/023870
Filing Date :07/02/2011
(87) International Publication No :WO 2011/097555
(61) Patent of Addition to Application Number :NA
Filing Date :NA
(62) Divisional to Application Number :NA
Filing Date :NA

(71)**Name of Applicant :**
1)JOHNSON & JOHNSON CONSUMER COMPANIES INC.
Address of Applicant :Grandview Road Skillman NJ 08558 U.S.A.
(72)**Name of Inventor :**
1)RUDY CLEMENTE
2)CURTIS COLE
3)SUSAN DALY

(57) Abstract :
Aqueous compositions including a discontinuous oil phase containing an ultraviolet radiation-absorbing polymer stabilized in a continuous aqueous phase, an oil-gelling polymer, and which are substantially free of non-polymeric ultraviolet radiation-absorbers.

No. of Pages : 30 No. of Claims : 19

(12) PATENT APPLICATION PUBLICATION
(19) INDIA
(22) Date of filing of Application :30/07/2012
(21) Application No.6678/DELNP/2012 A
(43) Publication Date : 23/10/2015

(54) Title of the invention : COMPOUNDS FOR TREATING RESPIRATORY SYNCYTIAL VIRUS INFECTIONS

(51) International classification :C07D487/12,A61K31/4162,A61P31/14
(31) Priority Document No :2010900494
(32) Priority Date :08/02/2010
(33) Name of priority country :Australia
(86) International Application No :PCT/AU2011/000124
Filing Date :07/02/2011
(87) International Publication No :WO 2011/094823
(61) Patent of Addition to Application Number :NA
Filing Date :NA
(62) Divisional to Application Number :NA
Filing Date :NA

(71)**Name of Applicant :**
1)BIOTA SCIENTIFIC MANAGEMENT PTY LTD
Address of Applicant :10/585 Blackburn Road Notting Hill Victoria 3168 Australia
(72)**Name of Inventor :**
1)MITCHELL Jeffrey Peter
2)PITT Gary
3)DRAFFAN Alistair George
4)MAYES Penelope Anne
5)ANDRAU Laura
6)ANDERSON Kelly

(57) Abstract :
The present invention relates to compounds of formula (I) its salts isomers or prodrugs thereof useful in the treatment of viral infections in particular respiratory syncytial virus (RSV) infections. The present invention also relates to processes for preparing the compounds and intermediates used in their preparation.

No. of Pages : 154 No. of Claims : 36

(12) PATENT APPLICATION PUBLICATION
(19) INDIA
(22) Date of filing of Application :23/07/2014
(21) Application No.6201/DELNP/2014 A
(43) Publication Date : 23/10/2015

(54) Title of the invention : GAS TURBINE HAVING AN EXHAUST GAS DIFFUSER AND SUPPORTING FINS

(51) International classification :F01D25/30,F02C6/08
(31) Priority Document No :12157273.9
(32) Priority Date :28/02/2012
(33) Name of priority country :EPO
(86) International Application No :PCT/EP2013/050610
Filing Date :15/01/2013
(87) International Publication No :WO 2013/127553
(61) Patent of Addition to Application Number :NA
Filing Date :NA
(62) Divisional to Application Number :NA
Filing Date :NA

(71)**Name of Applicant :**
1)SIEMENS AKTIENGESELLSCHAFT
Address of Applicant :Wittelsbacherplatz 2 80333 M¼nchen Germany
(72)**Name of Inventor :**
1)BR–KER Marc
2)BUCHAL Tobias

(57) Abstract :
The invention relates to a gas turbine (10) having an exhaust gas diffuser (21) connected to a turbine unit (24) wherein the gas diffuser channel (33) of the gas diffuser is delimited on the outside by a channel wall (40) and is provided with a plurality of hollow supporting fins (35) extending inward for fastening a radial bearing (51) of the gas turbine (10) wherein at least one blow off line (47) for blow off air comprising at least one pipeline ends at the outlet side on the exhaust gas diffuser (21) and the end of the exhaust gas diffuser on the inlet side is connected to a compressor (18) of the gas turbine (10). In order to at least partially compensate for the incorrect incident flow of the supporting fins (35) more particularly in partial load operation it is proposed that the supporting fins (35) have a hub (48) on the inner end thereof the axial end of said hub being provided with additional openings (49) for blowing out the blow off air in the diffuser channel.

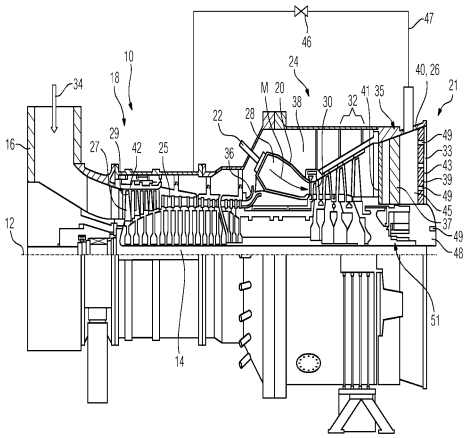

No. of Pages : 13 No. of Claims : 4

(12) PATENT APPLICATION PUBLICATION
(21) Application No.6202/DELNP/2014 A
(19) INDIA
(22) Date of filing of Application :23/07/2014
(43) Publication Date : 23/10/2015

(54) Title of the invention : POLYMERIZATION CATALYST COMPOSITION FOR CONJUGATED DIENE MONOMER

(51) International classification :C08F4/54,C08F4/605,C08F8/00
(31) Priority Document No :2012019085
(32) Priority Date :31/01/2012
(33) Name of priority country :Japan
(86) International Application No:PCT/JP2013/052028
Filing Date :30/01/2013
(87) International Publication No :WO 2013/115242
(61) Patent of Addition to Application Number :NA
Filing Date :NA
(62) Divisional to Application Number :NA
Filing Date :NA

(71)**Name of Applicant :**
1)ASAHI KASEI CHEMICALS CORPORATION
Address of Applicant :1 105 Kanda Jinbocho Chiyoda ku Tokyo 1018101 Japan
(72)**Name of Inventor :**
1)IWASE Katsuhiro
2)KOSUGI Yuji

(57) Abstract :
A polymerization catalyst composition for a conjugate diene monomer said composition containing a specific compound and a rare earth complex having a specific structure.

No. of Pages : 114 No. of Claims : 14

(12) PATENT APPLICATION PUBLICATION
(19) INDIA
(22) Date of filing of Application :23/07/2014
(21) Application No.6206/DELNP/2014 A
(43) Publication Date : 23/10/2015

(54) Title of the invention : ETHYLENE BASED POLYMER COMPOSITION AND MOLDED BODY OBTAINED FROM SAME

(51) International classification :C08L23/08,B32B27/32,C08J5/18
(31) Priority Document No :2011288417
(32) Priority Date :28/12/2011
(33) Name of priority country :Japan
(86) International Application No :PCT/JP2012/083617
Filing Date :26/12/2012
(87) International Publication No :WO 2013/099927
(61) Patent of Addition to Application Number :NA
Filing Date :NA
(62) Divisional to Application Number :NA
Filing Date :NA

(71)**Name of Applicant :**
1)MITSUI CHEMICALS INC.
Address of Applicant :5 2 Higashi Shimbashi 1 chome Minato ku Tokyo 1057117 Japan
2)PRIME POLYMER CO. LTD.
(72)**Name of Inventor :**
1)SATOH Yasuo
2)HARADA Yasuyuki

(57) Abstract :
The present invention provides: an ethylene based polymer composition which has particularly excellent moldability and excellent mechanical strength; a molded body which is obtained from the ethylene based polymer; and a film and a multilayer film each of which has particularly excellent blocking resistance. An ethylene based polymer composition () of the present invention contains a specific ethylene based polymer (a) that is a copolymer of ethylene and an a olefin having 4 10 carbon atoms and another ethylene based polymer () that is a copolymer of ethylene and an a olefin having 4 10 carbon atoms. The weight fraction [Wa] of the ethylene based polymer (a) is from 0.1 to 0.9 (inclusive) and the weight fraction [W] of the ethylene based polymer () is from 0.1 to 0.9 (inclusive) (with the total of Wa and W being 1.0).

No. of Pages : 125 No. of Claims : 8

(12) PATENT APPLICATION PUBLICATION
(21) Application No.6680/DELNP/2012 A
(19) INDIA
(22) Date of filing of Application :30/07/2012
(43) Publication Date : 23/10/2015

(54) Title of the invention : HIGH EFFICIENCY THRUSTER INDEPENDENT OF THE OUTSIDE ENVIRONMENT

(51) International classification :F01D1/10,F01D1/12,F01D1/14
(31) Priority Document No :09/06424
(32) Priority Date :31/12/2009
(33) Name of priority country :France
(86) International Application No :PCT/IB2010/003391
Filing Date :29/12/2010
(87) International Publication No :WO 2011/080584
(61) Patent of Addition to Application Number :NA
Filing Date :NA
(62) Divisional to Application Number :NA
Filing Date :NA

(71)**Name of Applicant :**
1)LY Gilbert
Address of Applicant :7 bis rue des Charri¨res F 21800 Quetigny France
(72)**Name of Inventor :**
1)LY Gilbert

(57) Abstract :
The invention relates to an ecological thrusting device enabling optimum thrust independent from the outside environment. It consists of a special Francis turbine (1) from which the fluid is axially ejected at the outlet of the vane (1) at a relative speed W and is collected in a defined free space of a straight radial pump (2). Under the action of the centrifugal force the limit of the current lines forms a fixed virtual barrier Y thus preventing the centrifuged fluid from reaching the bottom of the pump in the free space area MNBCPQ thereby eliminating the antagonistic force exerted on said zone. As a result the thrusting force exerted on the turbine by the fluid remains intact. As the fluid leaves the pump it is axially reinjected at a relative speed W into a tank (4) for resupplying the turbine. There is therefore an energy exchange between the pumps and the turbine that form a closed circuit the entire system being driven by a motor (10). It is shown that the thrust force $P = (1/2)\ \rho\pi\infty^2 r^4$; p being the density of the centrifuged fluid in en Kg/m^3 ; ∞ being the angular speed of the turbine in rad/s; and r its radius in metres and P in Newtons. The calculation shows that the amount of thrust generated is very high; said thruster can be used to generate mechanical energy anywhere in space and especially to drive the most highly efficient flying machines.

No. of Pages : 16 No. of Claims : 9

(12) PATENT APPLICATION PUBLICATION
(19) INDIA
(22) Date of filing of Application :13/06/2012
(21) Application No.5227/DELNP/2012 A
(43) Publication Date : 23/10/2015

(54) Title of the invention : SELF-INJECTION DEVICE

(51) International classification :A61M 5/00
(31) Priority Document No :NA
(32) Priority Date :NA
(33) Name of priority country :NA
(86) International Application No :PCT/US2009/006573
Filing Date :16/12/2009
(87) International Publication No :WO 2011/075101
(61) Patent of Addition to Application Number :NA
Filing Date :NA
(62) Divisional to Application Number :NA
Filing Date :NA

(71)**Name of Applicant :**
1)BECTON, DICKINSON AND COMPANY
Address of Applicant :1 BECTON DRIVE, FRANKLIN LAKES, NJ 07417 UNITED STATES OF AMERICA U.S.A.
(72)**Name of Inventor :**
1)SONDEREGGER, RALPH
2)VEDRINE, LIONEL
3)BINGHAM, CURT
4)PETERSON, BART

(57) Abstract :
A drug delivery device (1 OO), including a body (104, 1 16) having a reservoir (164, 176) disposed therein for containing a medicament and an injection needle (1 52) for penetrating the skin of a patient, the needle (152) providing a path for the medicament between the reservoir (164, 176) and the patient. The device (100) also includes a needle cover (1 14) for selectively covering the injection needle (152), an adhesive (264) for selectively adhering the device to the patient, a release liner (500) for selectively covering a patient side of the adhesive (264), and a connecting means (1 12, 520, 512, 508, 524) for connecting the needle cover (1 14) and the release liner (500) such that removal of one of the needle cover (1 14) and the release liner (500) from the device (100) removes the other one of the needle cover (1 14) and the release liner (500).

No. of Pages : 66 No. of Claims : 32

(12) PATENT APPLICATION PUBLICATION
(19) INDIA
(22) Date of filing of Application :13/06/2012
(21) Application No.5228/DELNP/2012 A
(43) Publication Date : 23/10/2015

(54) Title of the invention : SELF-INJECTION DEVICE

(51) International classification :A61M 31/00
(31) Priority Document No :NA
(32) Priority Date :NA
(33) Name of priority country :NA
(86) International Application No :PCT/US2009/006577
Filing Date :16/12/2009
(87) International Publication No :WO 2011/075105
(61) Patent of Addition to Application Number :NA
Filing Date :NA
(62) Divisional to Application Number :NA
Filing Date :NA

(71)**Name of Applicant :**
1)BECTON, DICKINSON AND COMPANY
Address of Applicant :1 BECTON DRIVE FRANKLIN LAKES NEW JERSEY 07417-1880 UNITED STATES OF AMERICA U.S.A.
(72)**Name of Inventor :**
1)PETERSON, BART
2)SONDEREGGER, RALPH
3)CINDRICH, CHRISTOPHER

(57) Abstract :
A drug delivery device (500), including a body (504) having a needle opening (508) and a reservoir (164, 176) disposed therein for containing a medicament, and an injection needle (152) for penetrating the skin of a patient, the needle (152) providing a path for the medicament between the reservoir (164, 176) and the patient, and selectively protruding from the body (504) through the needle opening (508). The device (500) also includes safety means (576, 548, 552, 532, 512) for automatically retracting the needle (152) within the body (504) and covering the needle opening (508) upon removal of the device (500) from the patient.

No. of Pages : 62 No. of Claims : 29

(12) PATENT APPLICATION PUBLICATION
(19) INDIA
(22) Date of filing of Application :13/06/2012
(21) Application No.5229/DELNP/2012 A
(43) Publication Date : 23/10/2015

(54) Title of the invention : SELF-INJECTION DEVICE

(51) International classification :A61M 31/00
(31) Priority Document No :NA
(32) Priority Date :NA
(33) Name of priority country :NA
(86) International Application No :PCT/US2009/006575
Filing Date :16/12/2009
(87) International Publication No :WO 2011/075103
(61) Patent of Addition to Application Number :NA
Filing Date :NA
(62) Divisional to Application Number :NA
Filing Date :NA

(71)**Name of Applicant :**
1)BECTON, DICKINSON AND COMPANY
Address of Applicant :1 BECTON DRIVE FRANKLIN LAKES NEW JERSEY 07417-1880 UNITED STATES OF AMERICA U.S.A.
(72)**Name of Inventor :**
1)SONDEREGGER, RALPH

(57) Abstract :
A device (100) for delivering a medicament into a patients body by injection into or through the patients skin, including: a main body having a bottom enclosure (104) that has a top surface including a button guide latch (268); a reservoir (160) disposed within the main body for containing the medicament; an injection needle (152) for penetrating the skin of the patient, the needle (152) having a lumen and communicating with the reservoir (160) when the device (100) is activated; a pressurizing system (140, 144) for pressurizing the reservoir (160) when the device (100) is activated; and an activator button (128) movably disposed on the main body and movable from a pre-activated position to an activated position. The activator button (128) includes an activation arm (228). When the activator button (128) moves from the pre-activated position to the activated position, an end of the activation arm (228) engages with the button guide latch (268) and prevents return movement of the activator button (128).

No. of Pages : 56 No. of Claims : 25

(12) PATENT APPLICATION PUBLICATION
(19) INDIA
(22) Date of filing of Application :30/07/2012
(21) Application No.6690/DELNP/2012 A
(43) Publication Date : 23/10/2015

(54) Title of the invention : CAN BODY

(51) International classification :B65D1/16
(31) Priority Document No :10152593.9
(32) Priority Date :04/02/2010
(33) Name of priority country :EPO
(86) International Application No :PCT/EP2011/051695
Filing Date :04/02/2011
(87) International Publication No :WO 2011/095613
(61) Patent of Addition to Application Number :NA
Filing Date :NA
(62) Divisional to Application Number :NA
Filing Date :NA

(71)**Name of Applicant :**
1)CROWN PACKAGING TECHNOLOGY INC.
Address of Applicant :11535 S Central Avenue Alsip Illinois 60803 2599 U.S.A.
(72)**Name of Inventor :**
1)PRESSET Alain
2)MONRO Stuart
3)VINCENT Keith
4)RILEY Jonathan

(57) Abstract :
A drawn and ironed metal can body adapted for seaming onto a can end the can body comprising: an ironed sidewall an enclosed undomed base integrally formed with the sidewall a bottom panel of the base having an average Rockwell hardness number that is at least approximately 64.

No. of Pages : 57 No. of Claims : 11

(12) PATENT APPLICATION PUBLICATION
(19) INDIA
(22) Date of filing of Application :23/07/2014
(21) Application No.6217/DELNP/2014 A
(43) Publication Date : 23/10/2015

(54) Title of the invention : ROLLER MILL AND METHOD FOR OPERATING A ROLLER MILL

(51) International classification :B02C15/00
(31) Priority Document No :10 2012 100 946.5
(32) Priority Date :06/02/2012
(33) Name of priority country :Germany
(86) International Application No :PCT/EP2013/051133
Filing Date :22/01/2013
(87) International Publication No :WO 2013/117423
(61) Patent of Addition to Application Number :NA
Filing Date :NA
(62) Divisional to Application Number :NA
Filing Date :NA

(71)**Name of Applicant :**
1)THYSSENKRUPP INDUSTRIAL SOLUTIONS AG
Address of Applicant :ThyssenKrupp Allee 1 45143 Essen Germany
(72)**Name of Inventor :**
1)ASSMANN Bjrn Olaf
2)PETRING Jrg
3)KACHE Guido

(57) Abstract :
The roller mill according to the invention for grinding milling material has a grinding table and at least one grinding roller which interacts with the grinding table wherein a water lance for applying water to the milling material is arranged in front of the grinding roller in the rotational direction of the grinding table. The water lance is of rotatable configuration and means for rotating the water lance are provided in order to influence the action time of the water on the milling material in a targeted manner before the milling material is captured by the grinding roller.

No. of Pages : 14 No. of Claims : 10

(12) PATENT APPLICATION PUBLICATION
(19) INDIA
(22) Date of filing of Application :23/07/2014
(21) Application No.6218/DELNP/2014 A
(43) Publication Date : 23/10/2015

(54) Title of the invention : PROTECTIVE CAP FOR A PRESSURISED FLUID CYLINDER VALVE AND PRODUCTION METHOD THEREOF

(51) International classification :F17C13/00
(31) Priority Document No :1253604
(32) Priority Date :19/04/2012
(33) Name of priority country :France
(86) International Application No :PCT/FR2013/050621
Filing Date :22/03/2013
(87) International Publication No :WO 2013/156699
(61) Patent of Addition to Application Number :NA
Filing Date :NA
(62) Divisional to Application Number :NA
Filing Date :NA

(71)**Name of Applicant :**
1)LAIR LIQUIDESOCIETE ANONYME POUR LETUDE ET LEXPLOITATION DES PROCEDES GEORGES CLAUDE
Address of Applicant :75 Quai dOrsay F 75007 Paris France
(72)**Name of Inventor :**
1)LIGONESCHE Renaud
2)TRINDADE Fran§ois
3)LEBEGUE William

(57) Abstract :
The invention relates to a protective cap for a pressurised fluid cylinder valve comprising a hoop (1) defining a sheltered protected space the lower end of the hoop (1) being secured to the generally annular base (2) that is intended to be mounted around the neck of a pressurised fluid cylinder. The cap is characterised in that the hoop (1) comprises a draw formed metal sheet. The invention also relates to the corresponding method.

No. of Pages : 20 No. of Claims : 15

(12) PATENT APPLICATION PUBLICATION
(19) INDIA
(22) Date of filing of Application :23/07/2014
(21) Application No.6219/DELNP/2014 A
(43) Publication Date : 23/10/2015

(54) Title of the invention : SYSTEMS AND METHODS FOR MICROFINANCE CREDIT DATA PROCESSING AND REPORTING

(51) International classification :G06Q40/02,G06Q20/24
(31) Priority Document No :13/787548
(32) Priority Date :06/03/2013
(33) Name of priority country :U.S.A.
(86) International Application No :PCT/US2014/019142
Filing Date :27/02/2014
(87) International Publication No :WO 2014/137759
(61) Patent of Addition to Application Number :NA
Filing Date :NA
(62) Divisional to Application Number :NA
Filing Date :NA

(71)**Name of Applicant :**
1)EXPERIAN INFORMATION SOLUTIONS INC.
Address of Applicant :475 Anton Boulevard Costa Mesa CA 92626 U.S.A.
(72)**Name of Inventor :**
1)ACHANTA Venkat
2)AARAVABHOOMI Karthikeyan Reddy
3)LASSEN Patricia Cheryl

(57) Abstract :
Systems and methods are provided for processing microfinance related credit data and generating credit reports based on the processed microfinance credit data. In some embodiments a credit report/score generation system (130) generates a microfinance credit report according to relevant data rules module (132A) display rules module (132B) and other relevant reporting format information. Payment status may be determined for each entry in a payment grid which may correspond to a payment interval such as for example daily weekly or monthly. Credit reports may be generated with selectable options enabling the user to view at least one other payment grid having entries corresponding to a different payment interval.

No. of Pages : 56 No. of Claims : 29

(12) PATENT APPLICATION PUBLICATION
(19) INDIA
(22) Date of filing of Application :30/07/2012
(21) Application No.6699/DELNP/2012 A
(43) Publication Date : 23/10/2015

(54) Title of the invention : ENGINE CONTROL UNIT, ENGINE CONTROL SYSTEM AND ENGINE CONTROL METHOD •

(51) International classification :B41C
(31) Priority Document No :2010-208166
(32) Priority Date :16/09/2010
(33) Name of priority country :Japan
(86) International Application No :PCT/JP2011/070939
Filing Date :14/09/2011
(87) International Publication No :WO 2012/036184
(61) Patent of Addition to Application Number :NA
Filing Date :NA
(62) Divisional to Application Number :NA
Filing Date :NA

(71)**Name of Applicant :**
1)SHINDENGEN ELECTRIC MANUFACTURING CO. LTD.
Address of Applicant :2-1 Ohtemachi 2-chome Chiyoda-ku Tokyo-to Japan Japan
(72)**Name of Inventor :**
1)SHINJI KAWASUMI

(57) Abstract :
An engine control method includes: a step of determining whether or not a crank angle of the engine lies in a first section between a top dead center in a compression stroke and a first angie In a case where the number of revolutions of the engine Is lower than the prescribed number of revolutions; a step of running the engine in a forward direction by driving a motor that applies a torque to a crank of the engine in the forward direction in a case where the crank angle of the engine does not lie In the first section; a step of determining whether or not the.....

No. of Pages : 43 No. of Claims : 24

(12) PATENT APPLICATION PUBLICATION
(21) Application No.3378/DELNP/2012 A
(19) INDIA
(22) Date of filing of Application :18/04/2012
(43) Publication Date : 23/10/2015

(54) Title of the invention : ELECTROCHEMICAL DEVICE HAVING A SOLID ALKALINE ION-CONDUCTING ELECTROLYTE AN AQUEOUS ELECTROLYTE

(51) International classification :H01M 6/18
(31) Priority Document No :09 57528
(32) Priority Date :27/10/2009
(33) Name of priority country :France
(86) International Application No :PCT/FR2010/052246
Filing Date :21/10/2010
(87) International Publication No :WO 2011/051597
(61) Patent of Addition to Application Number :NA
Filing Date :NA
(62) Divisional to Application Number :NA
Filing Date :NA

(71)**Name of Applicant :**
1)ELECTRICITE DE FRANCE
Address of Applicant :22-30, AVENUE DE WAGRAM, F-75008 PARIS, FRANCE France
(72)**Name of Inventor :**
1)TOUSSAINT, GWENAELLE
2)STEVENS, PHILIPPE

(57) Abstract :
The present invention relates to an alkaline cation-conducting ceramic membrane covered, over at least a portion of the surface thereof, with a cation-conducting organic polyelectrolyte layer that is insoluble and chemically stable in pH-basic water. The invention also relates to an electrochemical device including such a membrane as a solid electrolyte in contact with a liquid electrolyte formed of an alkali metal hydroxide aqueous solution.

No. of Pages : 22 No. of Claims : 12

(12) PATENT APPLICATION PUBLICATION
(19) INDIA
(22) Date of filing of Application :25/07/2012
(21) Application No.6559/DELNP/2012 A
(43) Publication Date : 23/10/2015

(54) Title of the invention : FLUID MACHINE •

(51) International classification :B23B
(31) Priority Document No :2010-013088
(32) Priority Date :25/01/2010
(33) Name of priority country :Japan
(86) International Application No :PCT/JP2011/000366
Filing Date :24/01/2011
(87) International Publication No : NA
(61) Patent of Addition to Application Number :NA
Filing Date :NA
(62) Divisional to Application Number :NA
Filing Date :NA

(71)**Name of Applicant :**
1)SANDEN CORPORATION
Address of Applicant :20 Kotobuki-cho Isesaki-shi Gunma 372-8502 Japan
(72)**Name of Inventor :**
1)NORIYUKI KOBAYASHI
2)HITOMI SHIBATA

(57) Abstract :
Provided is a fluid machine which can be produced with a reduced weight and size at a reduced production cost. 5 The fluid machine (1) comprises a drive unit (4) and a driven unit (6) arranged in a hermetic container (2) such that drive power is transmitted from the drive unit to the driven unit, the hermetic container (2) including a first shell (78) covering the drive unit (4) and a second shell 10 (80) covering the driven unit (6) and joined to the first shell (78), wherein the first and second shells (78, 80) are members formed by different working processes.

No. of Pages : 26 No. of Claims : 9

(12) PATENT APPLICATION PUBLICATION
(21) Application No.6573/DELNP/2012 A
(19) INDIA
(22) Date of filing of Application :25/07/2012
(43) Publication Date : 23/10/2015

(54) Title of the invention : POLYETHYLENE MOULDING COMPOSITION WITH IMPROVED STRESS CRACK/STIFFNESS RELATIONSHIP AND IMPACT RESISTANCE

(51) International classification :C08L23/04
(31) Priority Document No :10250152.5
(32) Priority Date :29/01/2010
(33) Name of priority country :EPO
(86) International Application No :PCT/EP2011/051172
Filing Date :27/01/2011
(87) International Publication No :WO 2011/092263
(61) Patent of Addition to Application Number :NA
Filing Date :NA
(62) Divisional to Application Number :NA
Filing Date :NA

(71)**Name of Applicant :**
1)BOREALIS AG
Address of Applicant :IZD Tower Wagramerstrasse 17 19 A 1220 Vienna Austria
(72)**Name of Inventor :**
1)BURYAK Andrey
2)DIX Albrecht
3)KONA Balakantha Rao

(57) Abstract :
A high density polyethylene moulding composition having a multimodal molecular weight distribution having a density according to ISO 1183 at 23°C in the range of 945 to 965 kg/m and an MFR according to ISO 1133 in the range of 0.05 to 25 g/10 min said polyethylene moulding composition comprising at least three ethylene polymer fractions having distinct molecular weights: A) 15 to 50 wt% of a low molecular weight ethylene homopolymer fraction with a weight average molecular weight Mw in the range of 15 to 40 kg/mol; B) 15 to 50 wt% of a medium molecular weight ethylene homopolymer fraction with a weight average molecular weight Mw in the range of 70 to 180 kg/mol; and C) 15 to 50 wt% of a high molecular weight ethylene copolymer fraction with a weight average molecular weight Mw in the range of 200 to 400 kg/mol; and wherein the composition has: a tensile modulus according to ISO 527 2: 1993 measured on compression moulded samples of at least 800 MPa; a Charpy impact strength CIS (23°C) according to ISO 179:2000 measured on V notched samples produced by compression moulding of at least 30 kJ/m; and an environmental stress crack resistance ESCR measured as FNCT full notch creep test according to ISO/DIS 16770.3 at 50°C and 6 MPa of at least 20 h.

No. of Pages : 29 No. of Claims : 13

(12) PATENT APPLICATION PUBLICATION
(19) INDIA
(22) Date of filing of Application :25/07/2012
(21) Application No.6574/DELNP/2012 A
(43) Publication Date : 23/10/2015

(54) Title of the invention : MOULDING COMPOSITION

(51) International classification :C08L23/04
(31) Priority Document No :10250150.9
(32) Priority Date :29/01/2010
(33) Name of priority country :EPO
(86) International Application No :PCT/EP2011/051173
Filing Date :27/01/2011
(87) International Publication No :WO 2011/092264
(61) Patent of Addition to Application Number :NA
Filing Date :NA
(62) Divisional to Application Number :NA
Filing Date :NA

(71)**Name of Applicant :**
1)BOREALIS AG
Address of Applicant :IZD Tower Wagramerstrasse 17 19 A 1220 Vienna Austria
(72)**Name of Inventor :**
1)BURYAK Andrey
2)DIX Albrecht
3)PALML–F Magnus
4)PAKKANEN Anneli
5)PIEL Christian
6)FIOLA Ayodele Olutayo
7)DRENG Tore
8)MAARANEN Janne
9)KRAJETE Alexander
10)FILIPE Susana

(57) Abstract :
A polyethylene moulding composition having a multimodal molecular weight distribution having a density according to ISO 1183 at 23°C in the range of 920 to 960 kg/m and an MFR190/2 according to ISO 1133 in the range of 0.05 to 10 g/10 min said polyethylene moulding composition comprising at least three ethylene polymer fractions having distinct molecular weights : A) 15 to 50 wt% of a low molecular weight ethylene homopolymer or copolymer fraction with a weight average molecular weight Mw in the range of 15 to 40 kg/mol; B) 15 to 50 wt% of a medium molecular weight ethylene homopolymer or copolymer fraction with a weight average molecular weight Mw in the range of 70 to 200 kg/mol; and C) 15 to 50 wt% of a high molecular weight ethylene homopolymer or copolymer fraction with a weight average molecular weight Mw in the range of 220 to 400 kg/mol provided that one of A B and C is an ethylene homopolymer and at least one other component is an ethylene copolymer with at least one C C comonomer; and wherein the composition has a Shore D hardness measured according to ASTM D2240 05 (15 sec) of at least 56.0.

No. of Pages : 38 No. of Claims : 15

(12) PATENT APPLICATION PUBLICATION
(19) INDIA
(22) Date of filing of Application :31/07/2012
(21) Application No.6714/DELNP/2012 A
(43) Publication Date : 23/10/2015

(54) Title of the invention : ORGANO-METALLIC FRAMEWORKS DERIVED FROM CARBENOPHILIC METALS AND METHOD OF MAKING SAME

(51) International classification :B01J31/16,B01J31/04,B01J31/18
(31) Priority Document No :61/304,300
(32) Priority Date :12/02/2010
(33) Name of priority country :U.S.A.
(86) International Application No :PCT/US2011/024671
Filing Date :12/02/2011
(87) International Publication No :WO 2011/146155
(61) Patent of Addition to Application Number :NA
Filing Date :NA
(62) Divisional to Application Number :NA
Filing Date :NA

(71)**Name of Applicant :**
1)THE REGENTS OF THE UNIVERSITY OF CALIFORNIA
Address of Applicant :1111 Franklin Street 5th Floor Oakland CA 94607 U.S.A.
2)BASF SE
(72)**Name of Inventor :**
1)YAGHI Omar M.
2)CZAJA Alexander U.
3)KONOSUKE Oisaki

(57) Abstract :
The disclosure provides organic frameworks comprising increased stability.

No. of Pages : 56 No. of Claims : 12

(12) PATENT APPLICATION PUBLICATION
(19) INDIA
(22) Date of filing of Application :23/07/2014
(21) Application No.6182/DELNP/2014 A
(43) Publication Date : 23/10/2015

(54) Title of the invention : EXHAUST GAS TURBOCHARGER

(51) International classification :F02B39/00,F02B39/12,F02B37/00
(31) Priority Document No :10 2012 005 283.9
(32) Priority Date :15/03/2012
(33) Name of priority country :Germany
(86) International Application No :PCT/US2013/029490
Filing Date :07/03/2013
(87) International Publication No :WO 2013/138143
(61) Patent of Addition to Application Number :NA
Filing Date :NA
(62) Divisional to Application Number :NA
Filing Date :NA

(71)**Name of Applicant :**
1)BORGWARNER INC.
Address of Applicant :Patent Department 3850 Hamlin Road Auburn Hills MI 48326 U.S.A.
(72)**Name of Inventor :**
1)LOEWENBERG Michael

(57) Abstract :
The invention relates to an exhaust gas turbocharger (1) having a shaft (2) which has an outer diameter (A2); having a turbine wheel (5) which is fastened to the shaft (2); and having a connecting device (8) by means of which the shaft (2) is fastened to the turbine wheel (5); wherein the shaft (2) has in the region of an end side (3) a shaft shoulder (4) which comprises an outer diameter (A4) larger than the outer diameter (A2) of the shaft (2); the turbine wheel (5) has an external thread portion (7) integrally formed on its wheel rear side (6); and the connecting device (8) has a sleeve nut (8A) which is screwed onto the external thread portion (7) and in the process engages behind the shaft shoulder (4) in order to brace the shaft (2) against the turbine wheel (5).

No. of Pages : 9 No. of Claims : 9

(12) PATENT APPLICATION PUBLICATION
(19) INDIA
(22) Date of filing of Application :23/07/2014
(21) Application No.6183/DELNP/2014 A
(43) Publication Date : 23/10/2015

(54) Title of the invention : EXHAUST GAS TURBOCHARGER

(51) International classification :F02B37/12,F02B37/22,F02B37/24
(31) Priority Document No :102012008467.6
(32) Priority Date :27/04/2012
(33) Name of priority country :Germany
(86) International Application No :PCT/US2013/037290
Filing Date :19/04/2013
(87) International Publication No :WO 2013/163015
(61) Patent of Addition to Application Number :NA
Filing Date :NA
(62) Divisional to Application Number :NA
Filing Date :NA

(71)**Name of Applicant :**
1)BORGWARNER INC.
Address of Applicant :Patent Department 3850 Hamlin Road Auburn Hills Michigan 48326 U.S.A.
(72)**Name of Inventor :**
1)METZ Dietmar
2)MUELLER Martin
3)RAMB Thomas

(57) Abstract :
An exhaust gas turbocharger (1) having a turbine (2) which has a turbine wheel (3) surrounded by an intake duct (4) and having a VTG cartridge (5) which has a washer (6) and a vane bearing ring (7) which delimit the intake duct (4) and which has a plurality of vanes (8) which are arranged in the intake duct (4) and are mounted in the vane bearing ring (7) by way of rotatable vane shafts (9) which are connected to vane levers (10) the lever heads (11) of which engage into associated grooves (12) in a unison ring (13) which surrounds the vane bearing ring (7) on the outside; and having a radial bearing between the unison ring (13) and the vane bearing ring (7) wherein the vane levers (10) for forming the radial bearing are in the form of cam levers the lever heads (11) of which are supported in the grooves (12).

No. of Pages : 12 No. of Claims : 12

(12) PATENT APPLICATION PUBLICATION
(19) INDIA
(22) Date of filing of Application :27/07/2012
(21) Application No.6642/DELNP/2012 A
(43) Publication Date : 23/10/2015

(54) Title of the invention : PROTECTED ALPHA AMYLASE

(51) International classification :A23D9/013
(31) Priority Document No :61/295444
(32) Priority Date :15/01/2010
(33) Name of priority country :U.S.A.
(86) International Application No :PCT/US2011/021474
Filing Date :17/01/2011
(87) International Publication No :WO 2012/169997
(61) Patent of Addition to Application Number :NA
Filing Date :NA
(62) Divisional to Application Number :NA
Filing Date :NA

(71)**Name of Applicant :**
1)KEMIN INDUSTRIES INC.
Address of Applicant :2100 Maury Street Des Moines Iowa 50317 U.S.A.
2)MA Jun
(72)**Name of Inventor :**
1)DUAN Zhiyong
2)LIU Yongcai
3)LAO Ye
4)CHEN Dong

(57) Abstract :
A protected a amylase is described. Pelletization and encapsulation technology in which slow release materials and pH sensitive materials are used to protect the a amylase from inactivation at low pH. The protected a amylase was found to be highly stable after as long as 3 hour treatment in acid (pH 3.0). When treated in pH 3.0 for 1 hour and followed by treatment with lipase and pancreatin in pH 7.0 for 2 hour to simulate in vivo environment it was found that a amylase was fully released and measurable. In addition the protected a amylase showed superior efficacy to the unprotected a amylase. The protected a amylase also demonstrated enhanced thermostability.

No. of Pages : 42 No. of Claims : 20

(12) PATENT APPLICATION PUBLICATION
(21) Application No.6596/DELNP/2012 A
(19) INDIA
(22) Date of filing of Application :26/07/2012
(43) Publication Date : 23/10/2015

(54) Title of the invention : CRUCIATE-RETAINING KNEE PROSTHESIS •

(51) International classification :A61K
(31) Priority Document No :61/299,835
(32) Priority Date :29/01/2010
(33) Name of priority country :U.S.A.
(86) International Application No :PCT/US2011/022922
Filing Date :28/01/2011
(87) International Publication No :WO 2011/094540
(61) Patent of Addition to Application Number :NA
Filing Date :NA
(62) Divisional to Application Number :NA
Filing Date :NA

(71)**Name of Applicant :**
1)SMITH & NEPHEW INC.
Address of Applicant :7135 Goodlett Farms Parkway Cordova TN 38016 U.S.A.
(72)**Name of Inventor :**
1)NATHANIEL M. LENZ
2)RICHARD MICHAEL SMITH
3)ZACHARY CHRISTOPHER WILKINSON
4)BRIAN W. MCKINNON
5)ABRAHAM B. SALEHI
6)JONATHAN KIRK NELSEN
7)MICHAEL D. RIES
8)GERALD J. JERRY

(57) Abstract :
Certain versions generally provide an improved tibial base member (for example, but not limited to, 10) comprising keel portions (for example, but not limited to, 14a, 14b, 14c) that allow one or both cruciate ligaments to be preserved. Other versions provide improved lateral and/or medial inserts (for example, but not limited to, 110, 210) having a mesial lip (for example, but not limited to, 118, 128) that helps relieve and/or prevent impingement between the femoral component (for example, but not limited to, 400) and the tibial eminence. Other versions provide improved femoral components (for example, but not limited to, 400) having various chamfers (for example, but not limited to, 404, 410, 470) to provide additional clearance with respect to the tibial eminence and posterior cruciate ligament without decreasing bone coverage.

No. of Pages : 113 No. of Claims : 17

(12) PATENT APPLICATION PUBLICATION
(21) Application No.6610/DELNP/2012 A
(19) INDIA
(22) Date of filing of Application :26/07/2012
(43) Publication Date : 23/10/2015

(54) Title of the invention : CASTING COMPOSITE INGOT WITH METAL TEMPERATURE COMPENSATION

(51) International classification :B22D7/02,B22D15/00
(31) Priority Document No :61/337611
(32) Priority Date :11/02/2010
(33) Name of priority country :U.S.A.
(86) International Application No :PCT/CA2011/000145
Filing Date :09/02/2011
(87) International Publication No :WO 2011/097701
(61) Patent of Addition to Application Number :NA
Filing Date :NA
(62) Divisional to Application Number :NA
Filing Date :NA

(71)**Name of Applicant :**
1)NOVELIS INC.
Address of Applicant :191 Evans Avenue Toronto Ontario M8Z 1J5 Canada
(72)**Name of Inventor :**
1)WAGSTAFF Robert Bruce
2)SINDEN Aaron David
3)BISCHOFF Todd F.
4)BALL Eric
5)MCDERMOTT Jeff

(57) Abstract :
An exemplary embodiment of the invention provides a method of direct chill casting a composite metal ingot. The method involves sequentially casting two or more metal layers to form a composite ingot by supplying streams of molten metal to two or more casting chambers within a casting mold of a direct chill casting apparatus. Inlet temperatures of one or more of the streams of molten metal are monitored at a position adjacent to an inlet of a casting chamber fed with the stream and the inlet temperatures are compared with a predetermined set temperature for the stream to determine if there is any difference. A casting variable that affects molten metal temperatures entering or within the casting chambers (e.g. casting speed) is then adjusted by an amount based on the difference of the compared temperatures to eliminate adverse casting effects caused by the difference of the inlet temperature and the set temperature. Preferably an adjustment is selected that causes the monitored temperature to approach the set temperature. Another exemplary embodiment provides equipment for operation of the method.

No. of Pages : 37 No. of Claims : 19

(12) PATENT APPLICATION PUBLICATION
(19) INDIA
(22) Date of filing of Application :26/07/2012
(21) Application No.6600/DELNP/2012 A
(43) Publication Date : 23/10/2015

(54) Title of the invention : 5-ALKYNYL PYRIMIDINES AND THEIR USE AS KINASE INHIBITORS •

(51) International classification :A61K
(31) Priority Document No :10151722.5
(32) Priority Date :26/01/2010
(33) Name of priority country :EPO
(86) International Application No :PCT/EP2011/051060
Filing Date :26/01/2011
(87) International Publication No :WO 2011/092197
(61) Patent of Addition to Application Number :NA
Filing Date :NA
(62) Divisional to Application Number :NA
Filing Date :NA

(71)**Name of Applicant :**
1)BOEHRINGER INGELHEIM INTERNATIONAL GMBH
Address of Applicant :Binger Strasse 173 55216 Ingelheim Am Rhein Germany
(72)**Name of Inventor :**
1)SIEGFRIED SCHNEIDER
2)DIRK KESSLER
3)LARS VAN DER VEEN
4)TOBIAS WUNBERG

(57) Abstract :
The present invention encompasses compounds of general formula (1) wherein R1 to R4 R3 are defined as in claim 1, which are suitable for the treatment of diseases characterised by excessive or abnormal cell proliferation, and the use thereof for preparing a medicament having the above-mentioned properties.

No. of Pages : 120 No. of Claims : 21

(12) PATENT APPLICATION PUBLICATION
(21) Application No.6601/DELNP/2012 A
(19) INDIA
(22) Date of filing of Application :26/07/2012
(43) Publication Date : 23/10/2015

(54) Title of the invention : COMPOSITION FOR CONTROL OF ANIMAL PARASITES, AND METHOD FOR CONTROL OF ANIMAL PARASITES •

(51) International classification :A61B
(31) Priority Document No :2010-019747
(32) Priority Date :29/01/2010
(33) Name of priority country :Japan
(86) International Application No :PCT/JP2011/051673
Filing Date :27/01/2011
(87) International Publication No :WO 2011/093415
(61) Patent of Addition to Application Number :NA
Filing Date :NA
(62) Divisional to Application Number :NA
Filing Date :NA

(71)**Name of Applicant :**
1)MITSUI CHEMICALS AGRO INC.
Address of Applicant :5-2 Higashi-Shimbashi 1-chome Minato-ku Tokyo 105-7117 Japan
(72)**Name of Inventor :**
1)MICHIKAZU NOMURA

(57) Abstract :
A conipositon for exterminating an animal parasite comprising as an active ingredient at least one amide derivative represented by the following Formula (1) has an excellent activity exterminating an animal parasite: In the following Formula (1), X, represents a fluorine atom; X2, X3, and X4 are each a hydrogen atom; R, represents a hydrogen atom or a CI-C3 alkyl group; R2 is a hydrogen atom; Y, and YS each independently represent a halogen atom or a C1-C3 haloalkyl group; Y2 and Y4 each represent a hydrogen atom; and Y3 represents a heptafluoroisopropyl group.

No. of Pages : 51 No. of Claims : 7

(12) PATENT APPLICATION PUBLICATION
(19) INDIA
(22) Date of filing of Application :26/07/2012
(21) Application No.6602/DELNP/2012 A
(43) Publication Date : 23/10/2015

(54) Title of the invention : 5-ALKYNYL-PYRIMIDINES

(51) International classification :C07C
(31) Priority Document No :10151723.3
(32) Priority Date :26/01/2010
(33) Name of priority country :EPO
(86) International Application No :PCT/EP2011/051061
Filing Date :26/01/2011
(87) International Publication No :WO 2011/092198
(61) Patent of Addition to Application Number :NA
Filing Date :NA
(62) Divisional to Application Number :NA
Filing Date :NA

(71)**Name of Applicant :**
1)BOEHRINGER INGELHEIM INTERNATIONAL GMBH
Address of Applicant :Binger Strasse 173 55216 Ingelheim Am Rhein Germany
(72)**Name of Inventor :**
1)SIEGFRIED SCHNEIDER
2)DIRK KESSLER
3)LARS VAN DER VEEN
4)TOBIAS WUNBERG

(57) Abstract :
The present invention encompasses compounds of general formula (1), wherein R1 to R3 are defined as in claim 1, which are suitable for the treatment of diseases characterised by excessive or abnormal cell proliferation, and the use thereof for preparing a medicament having the above-mentioned properties.

No. of Pages : 297 No. of Claims : 21

(12) PATENT APPLICATION PUBLICATION
(19) INDIA
(22) Date of filing of Application :23/07/2014
(21) Application No.6200/DELNP/2014 A
(43) Publication Date : 23/10/2015

(54) Title of the invention : FLUORINATED POLYMERIZABLE HYDROGELS FOR WOUND DRESSINGS AND METHODS OF MAKING SAME

(51) International classification :A61L27/52
(31) Priority Document No :61/590379
(32) Priority Date :25/01/2012
(33) Name of priority country :U.S.A.
(86) International Application No :PCT/US2013/023183
Filing Date :25/01/2013
(87) International Publication No :WO 2013/112863
(61) Patent of Addition to Application Number :NA
Filing Date :NA
(62) Divisional to Application Number :NA
Filing Date :NA

(71)**Name of Applicant :**
1)THE UNIVERSITY OF AKRON
Address of Applicant :302 E. Buchtel Common Akron Ohio 44325 U.S.A.
(72)**Name of Inventor :**
1)LEIPZIG Nic
2)WIJEKOON Asanka

(57) Abstract :
Fluorinated hydrogels are used to dissolve oxygen or other oxygenated small molecules. The fluorinated hydrogels may release the dissolved oxygen or other oxygenated small molecules upon exposure to an environment of lower tension. The fluorinated hydrogels have a particular application in wound healing where the fluorinated hydrogels may be used as a wound dressing.

No. of Pages : 65 No. of Claims : 21

(12) PATENT APPLICATION PUBLICATION
(19) INDIA
(22) Date of filing of Application :25/07/2012
(21) Application No.6589/DELNP/2012 A
(43) Publication Date : 23/10/2015

(54) Title of the invention : ENGINEERED OPSONIN FOR PATHOGEN DETECTION AND TREATMENT

(51) International classification :C07K19/00
(31) Priority Document No :61/296222
(32) Priority Date :19/01/2010
(33) Name of priority country :U.S.A.
(86) International Application No :PCT/US2011/021603
Filing Date :19/01/2011
(87) International Publication No :WO 2011/090954
(61) Patent of Addition to Application Number :NA
Filing Date :NA
(62) Divisional to Application Number :NA
Filing Date :NA

(71)**Name of Applicant :**
1)PRESIDENT AND FELLOWS OF HARVARD COLLEGE
Address of Applicant :17 Quincy Street Cambridge Massachusetts 02138 U.S.A.
(72)**Name of Inventor :**
1)SUPER Michael
2)WAY Jeffrey Charles
3)INGBER Donald E.

(57) Abstract :
The present invention provides for engineered molecular opsonins that may be used to bind biological pathogens or identify subclasses or specific pathogen species for use in devices and systems for treatment and diagnosis of patients with infectious diseases blood borne infections or sepsis. An aspect of the invention provides for mannose binding lectin (MBL) which is an abundant natural serum protein that is part of the innate immune system. The ability of this protein lectin to bind to surface molecules on virtually all classes of biopathogens (viruses bacteria fungi protozoans) make engineered forms of MBL extremely useful in diagnosing and treating infectious diseases and sepsis.

No. of Pages : 33 No. of Claims : 30

(12) PATENT APPLICATION PUBLICATION
(21) Application No.6590/DELNP/2012 A
(19) INDIA
(22) Date of filing of Application :25/07/2012
(43) Publication Date : 23/10/2015

(54) Title of the invention : METHOD FOR MANUFACTURING WHEEL RIM FOR VEHICLE

(51) International classification :B21D22/02,B21D53/30
(31) Priority Document No :2010031955
(32) Priority Date :17/02/2010
(33) Name of priority country :Japan
(86) International Application No :PCT/JP2011/053201
Filing Date :16/02/2011
(87) International Publication No :WO 2011/102357
(61) Patent of Addition to Application Number :NA
Filing Date :NA
(62) Divisional to Application Number :NA
Filing Date :NA

(71)**Name of Applicant :**
1)TOPY KOGYO KABUSHIKI KAISHA
Address of Applicant :2 2 Osaki 1 chome Shinagawa ku Tokyo 1418634 Japan
(72)**Name of Inventor :**
1)ABE Kishiro
2)TAKANO Takamitsu
3)KATO Katsuki
4)TAGUCHI Kenji

(57) Abstract :
A method for manufacturing a wheel rim for a vehicle comprises an ironing step for ironing a tubular material (4) to manufacture a tubular member (10A) having a non uniform thickness the manufacture of the tubular member (10A) being performed using an ironing device (20) provided with: a punch (26); a die (22) having a side surface which faces the punch (26) and is formed as an irregular surface; and a pressing member (23). In the ironing step a flange section (9) of the tubular material is engaged with the die (22) the pressing member (23) is moved relative to the die (22) to sandwich the flange section (9) of the tubular material under pressure between the pressing member (23) and the die (22) and then the tubular member (10A) having a non uniform thickness is manufactured by subjecting at least a portion of the tubular material (4) the portion excluding the flange section (9) of the tubular material (4) to ironing by moving the punch (26) relative to the die (22).

No. of Pages : 52 No. of Claims : 8

(12) PATENT APPLICATION PUBLICATION
(19) INDIA
(22) Date of filing of Application :26/07/2012
(21) Application No.6629/DELNP/2012 A
(43) Publication Date : 23/10/2015

(54) Title of the invention : A SCALABLE MANUFACTURING PLATFORM FOR VIRAL VECTOR PURIFICATION AND VIRAL VECTORS SO PURIFIED FOR USE IN GENE THERAPY

(51) International classification :C12N15/86,C12N7/02
(31) Priority Document No :61/299184
(32) Priority Date :28/01/2010
(33) Name of priority country :U.S.A.
(86) International Application No :PCT/US2011/022371
Filing Date :25/01/2011
(87) International Publication No :WO 2011/094198
(61) Patent of Addition to Application Number :NA
Filing Date :NA
(62) Divisional to Application Number :NA
Filing Date :NA

(71)**Name of Applicant :**
1)THE CHILDRENS HOSPITAL OF PHILADELPHIA RESEARCH INSTITUTE ABRAMSON RESEARCH CENTER
Address of Applicant :Suite 140 Office of Technology Transfer 3615 Civic Center Boulevard Philadelphia PA 19104 U.S.A.
(72)**Name of Inventor :**
1)WRIGHT John Fraser
2)QU Guang
3)HAUCK Bernd
4)HIGH Katherine

(57) Abstract :
Methods for preparing highly purified AAV vector formulations are provided. The highly pure AAV formulations described herein are superior for clinical use.

No. of Pages : 37 No. of Claims : 12

(12) PATENT APPLICATION PUBLICATION
(19) INDIA
(22) Date of filing of Application :26/07/2012
(21) Application No.6620/DELNP/2012 A
(43) Publication Date : 23/10/2015

(54) Title of the invention : DISPLAY ELEMENT FOR A DISPLAY UNIT IN A VEHICLE

(51) International classification :B60K37/02,B60K35/00,B60Q3/04
(31) Priority Document No :10 2010 007 387.3
(32) Priority Date :10/02/2010
(33) Name of priority country :Germany
(86) International Application No :PCT/EP2010/069255
Filing Date :09/12/2010
(87) International Publication No :WO 2011/098171
(61) Patent of Addition to Application Number :NA
Filing Date :NA
(62) Divisional to Application Number :NA
Filing Date :NA

(71)**Name of Applicant :**
1)JOHNSON CONTROLS AUTOMOTIVE ELECTRONICS GMBH
Address of Applicant :Benzstrae 6 75196 Remchingen Germany
(72)**Name of Inventor :**
1)SSS Manfred

(57) Abstract :
The invention relates to a display element for the display unit (1) of a vehicle. The display element (1) can be backlit by means of at least one light source. According to the invention the display element (1) contains a film (1.1) that is provided with identifying elements and further contains a polarizing film (1.2) said films lying one above the other and being pressed against each other in the edge regions of said films with elastic elements.

No. of Pages : 19 No. of Claims : 12

(12) PATENT APPLICATION PUBLICATION
(19) INDIA
(22) Date of filing of Application :11/06/2012
(21) Application No.5143/DELNP/2012 A
(43) Publication Date : 23/10/2015

(54) Title of the invention : USE OF A NEUROFILAMENT PEPTIDE FOR THE TREATMENT OF GLIOMA

(51) International classification :A61K 38/16
(31) Priority Document No :09306227.1
(32) Priority Date :14/12/2009
(33) Name of priority country :EPO
(86) International Application No :PCT/EP2010/069663
Filing Date :14/12/2010
(87) International Publication No :WO 2011/073207
(61) Patent of Addition to Application Number :NA
Filing Date :NA
(62) Divisional to Application Number :NA
Filing Date :NA

(71)**Name of Applicant :**
1)UNIVERSITE D'ANGERS
Address of Applicant :40, RUE DE RENNES, F-49000 ANGERS, FRANCE France
2)INSTITUT NATIONAL DE LA SANTE ET DE LA RECHERCHE MEDICALE (INSERM)
3)THE ROYAL INSTITUTION FOR THE ADVANCEMENT OF LEARNING /MCGILL UNIVERSITY
(72)**Name of Inventor :**
1)EYER, JOEL
2)PETERSON, ALAN
3)BALZEAU, JULIEN
4)BERGES, RAPHAEL

(57) Abstract :
The present invention provides a new drug to treat malignant glioma, which is the most prevalent 1 type of primary tumor of the central nervous system (CNS). The present invention indeed shows that the isolated NFL-TBS40-63 peptide is highly specific for glioma cells, in which it triggers apoptosis. It is therefore presented here for use in a method for treating malignant glioma. The present invention further relates to the use of the NFL-TBS40-63 peptide for detecting specifically glioma cells either in vivo, or in vitro, or for addressing chemical compounds to said tumor cells.

No. of Pages : 55 No. of Claims : 17

(12) PATENT APPLICATION PUBLICATION
(19) INDIA
(22) Date of filing of Application :11/06/2012
(21) Application No.5144/DELNP/2012 A
(43) Publication Date : 23/10/2015

(54) Title of the invention : RECEIVER FOR CONCENTRATING PHOTOVOLTAIC-THERMAL SYSTEM

(51) International classification :H01L 31/00
(31) Priority Document No :12/622,416
(32) Priority Date :19/11/2009
(33) Name of priority country :U.S.A.
(86) International Application No :PCT/US2010/056847
Filing Date :16/11/2010
(87) International Publication No :WO 2011/062902
(61) Patent of Addition to Application Number :NA
Filing Date :NA
(62) Divisional to Application Number :NA
Filing Date :NA

(71)**Name of Applicant :**
1)COGENRA SOLAR, INC.
Address of Applicant :365 E. MIDDLEFIELD ROAD, MOUNTAIN VIEW, CALIFORNIA 94043, UNITED STATES OF AMERICA U.S.A.
(72)**Name of Inventor :**
1)LICHY, JOSEPH ISAAC
2)ATCHLEY, BRIAN EDWARD
3)MORAD, RATSON
4)ALMOGY, GILAD
5)REICH, ADAM BRIAN
6)LAWLER, JOHN
7)BECKETT, NATHAN PHILLIPS

(57) Abstract :
Systems, methods, and apparatus by which solar energy may be collected to provide electricity or a combination of heat and electricity are disclosed herein. Examples of solar energy receivers are disclosed that may be used to collect concentrated solar radiation.

No. of Pages : 56 No. of Claims : 40

(12) PATENT APPLICATION PUBLICATION
(21) Application No.6606/DELNP/2012 A
(19) INDIA
(22) Date of filing of Application :26/07/2012
(43) Publication Date : 23/10/2015

(54) Title of the invention : EXPANSIBLE THREADED JOINT AND METHOD FOR MAKING SAME •

(51) International classification :F02K
(31) Priority Document No :1000664
(32) Priority Date :17/02/2010
(33) Name of priority country :France
(86) International Application No :PCT/FR2011/000084
Filing Date :11/02/2011
(87) International Publication No :WO 2011/101554
(61) Patent of Addition to Application Number :NA
Filing Date :NA
(62) Divisional to Application Number :NA
Filing Date :NA

(71)**Name of Applicant :**
1)VALLOUREC MANNESMANN OIL & GAS FRANCE
Address of Applicant :54 rue Anatole france F-59620 Aulnoye-Aymeries France
(72)**Name of Inventor :**
1)JEROME DURIVAULT
2)ANNE-SOPHIE BUREAU-BAYART
3)ERIC VERGER

(57) Abstract :
An expandable threaded connection comprises a first tubular component comprising a male end (1) comprising a first and a second threaded zone (21, 22) and an insertion region (25) 5 provided with a first annular tongue (41) comprising a prominent abutment face (41 a) and a first concavity (43); a second tubular component comprising a female end (2) comprising a third and a fourth threaded zone (23, 24) and an insertion region (26) provided with a second annular tongue (42) comprising a prominent abutment face (42a) and a second concavity (44); the first and second tongues (41, 42) being respectively engaged in the second and first concavities (44, 10 43) in the made up condition, the abutment face of at least one tongue being in contact with at least one concavity, the male end (1) comprising a first surface (47) between the first threaded zone and the first tongue and the female end comprising a second surface (48) between the third threaded zone and the second concavity; in the made up condition, said first and second surfaces (47, 48) defining an annular space comprising a large radial dimension zone (49) and a small 15 radial dimension zone (50) which, after expansion, is capable of forming a metal-metal contact seal (60), the first tongue (41) bearing on the second tongue (42). Figure 1.

No. of Pages : 33 No. of Claims : 17

(12) PATENT APPLICATION PUBLICATION
(19) INDIA
(22) Date of filing of Application :26/07/2012
(21) Application No.6607/DELNP/2012 A
(43) Publication Date : 23/10/2015

(54) Title of the invention : ALPHA-ALUMINA AND ASSOCIATED USE, SYNTHESIS METHOD AND DEVICE

(51) International classification :C07C
(31) Priority Document No :FR1000594
(32) Priority Date :11/02/2010
(33) Name of priority country :France
(86) International Application No :PCT/EP2011/051938
Filing Date :10/02/2011
(87) International Publication No :WO 2011/098511
(61) Patent of Addition to Application Number :NA
Filing Date :NA
(62) Divisional to Application Number :NA
Filing Date :NA

(71)**Name of Applicant :**
1)BAIKOWSKI
Address of Applicant :Les Marais Noirs Ouest F-74430 Poisy France
(72)**Name of Inventor :**
1)LIONEL BONNEAU
2)MICHEL PEZZANI

(57) Abstract :
The invention relates to alpha-alumina with a purity of greater than or equal to 5 99.99%, in the form of spherical particles (1) with a size predominantly greater than or equal to 850 µm. The invention also relates to the use of alpha-alumina as defined above, and to a related process for synthesizing and device. 10 FIGURE:1

No. of Pages : 18 No. of Claims : 26

(12) PATENT APPLICATION PUBLICATION
(21) Application No.6608/DELNP/2012 A
(19) INDIA
(22) Date of filing of Application :26/07/2012
(43) Publication Date : 23/10/2015

(54) Title of the invention : BLOOD URIC ACID LEVEL LOWERING AGENT •

(51) International classification :A61B
(31) Priority Document No :2010-030846
(32) Priority Date :16/02/2010
(33) Name of priority country :Japan
(86) International Application No :PCT/JP2011/053004
Filing Date :14/02/2011
(87) International Publication No :WO 2011/102310
(61) Patent of Addition to Application Number :NA
Filing Date :NA
(62) Divisional to Application Number :NA
Filing Date :NA

(71)**Name of Applicant :**
1)MEIJI CO. LTD.
Address of Applicant :2-10 Shinsuna 1-chome Koto-ku Tokyo 136-8908 Japan
(72)**Name of Inventor :**
1)NARUOMI YAMADA
2)MASAYUKI UCHIDA
3)HIROYUKI ITOH
4)MAKOTO YAMAGUCHI

(57) Abstract :
To provide a blood uric acid lowering agent which is derived from a natural product and can be continuously taken for a long period of time. The blood uric acid lowering agent of the invention contains, as an active ingredient, a cheese enzymatic decomposition product. 49

No. of Pages : 51 No. of Claims : 42

(12) PATENT APPLICATION PUBLICATION
(19) INDIA
(22) Date of filing of Application :26/07/2012
(21) Application No.6634/DELNP/2012 A
(43) Publication Date : 23/10/2015

(54) Title of the invention : SYSTEMS AND METHODS FOR PROVIDING A VALIDATION TOOL

(51) International classification :G06F
(31) Priority Document No :61/299,831
(32) Priority Date :29/01/2010
(33) Name of priority country :U.S.A.
(86) International Application No :PCT/US2011/022941
Filing Date :28/01/2011
(87) International Publication No :WO 2011/094554
(61) Patent of Addition to Application Number :NA
Filing Date :NA
(62) Divisional to Application Number :NA
Filing Date :NA

(71)**Name of Applicant :**
1)LEXISNEXIS A DIVISION OF REED ELSEVIER INC.
Address of Applicant :9443 Springboro Pike Miamisburg Ohio 45342 USA. U.S.A.
(72)**Name of Inventor :**
1)MEHRA Gaurav
2)DALESSIO John Alexander
3)MILLER Molly
4)MANCHESTER Alison
5)KORNOWSKI Joseph

(57) Abstract :
Systems and methods for providing a validation tool may be configured to identify a plurality of words within a document the document being provided in a first window within a user interface. Additionally the systems and methods may be configured to determine from a predetermined list that includes terms of interest whether the words are matching words with terms of interest. The systems and methods may in response to determining that the plurality of words are matching words with the terms of interest highlight matching words in a document and access pieces of related data for matching words.

No. of Pages : 63 No. of Claims : 20

(12) PATENT APPLICATION PUBLICATION
(19) INDIA
(22) Date of filing of Application :26/07/2012
(21) Application No.6625/DELNP/2012 A
(43) Publication Date : 23/10/2015

(54) Title of the invention : MULTI-CARD MULTI-STANDBY TERMINAL SYNCHRONIZATION METHOD AND DEVICE THEREOF

(51) International classification :H04W88/06
(31) Priority Document No :NA
(32) Priority Date :NA
(33) Name of priority country :NA
(86) International Application No :PCT/CN2011/075427
Filing Date :08/06/2011
(87) International Publication No :WO 2012/109830
(61) Patent of Addition to Application Number :NA
Filing Date :NA
(62) Divisional to Application Number :NA
Filing Date :NA

(71)**Name of Applicant :**
1)SPREADTRUM COMMUNICATIONS(SHANGHAI) CO. LTD.
Address of Applicant :Spreadtrum Center Building No.1 Lane2288 Zuchongzhi Road Zhangjiang Shanghai 201203 China
(72)**Name of Inventor :**
1)HAN Wei
2)CHEN Xianliang

(57) Abstract :
A multi card multi standby terminal a synchronization method and the device thereof are provided. The synchronization method of the multi card multi standby terminal involves that the first terminal card starts up and searches a network and successfully resides in the first cell (S1); the second terminal card is controlled to reside in the first cell (S2); the first terminal card judges whether there is the second cell meeting a reselection condition according to the measured results of the neighboring cells if yes the first terminal card reselects the second cell (S3); the second terminal card is controlled to reselect the second cell after the first terminal card successfully resides in the second cell (S4). With the invention the pager receiving efficiency and the neighboring cell measuring efficiency can be improved and the power consumption of the terminal can be reduced and the time for reselecting and residing in a cell can be reduced and the physical layer realizing process can be simplified.

No. of Pages : 38 No. of Claims : 18

(12) PATENT APPLICATION PUBLICATION
(21) Application No.6626/DELNP/2012 A
(19) INDIA
(22) Date of filing of Application :26/07/2012
(43) Publication Date : 23/10/2015

(54) Title of the invention : METHOD, SYSTEM AND DEVICE FOR RESTRICTING CHAT ROOM LOGIN OF USERS

(51) International classification :H04L12/58
(31) Priority Document No :201010102718.3
(32) Priority Date :22/01/2010
(33) Name of priority country :China
(86) International Application No :PCT/CN2011/070202
Filing Date :12/01/2011
(87) International Publication No :WO 2011/088766
(61) Patent of Addition to Application Number :NA
Filing Date :NA
(62) Divisional to Application Number :NA
Filing Date :NA

(71)**Name of Applicant :**
1)TENCENT TECHNOLOGY (SHENZHEN) COMPANY LIMITED
Address of Applicant :Room 403 East Block 2 SEG Park Zhenxing Road Futian District Shenzhen Guangdong 518057 China
(72)**Name of Inventor :**
1)CHEN Xi

(57) Abstract :
A method system and device for restricting chat room login of users are provided by the present invention which belong to the field of computer. The method includes: the request for the designated user to quit the current chat room is received from the client corresponding to the chat room manager; according to the request the command for the designated user to quit the current chat room is sent to the client corresponding to the designated user to make the designated user quit the current chat room and the state information of the designated user is changed to the restriction state for restricting the designated user to the designated chat room. The system comprises a server and a user client. By the solutions provided by the embodiments of the present invention the retry of the user who was removed from the current chat room and the influence on the other users in the chat room are avoided and meanwhile the user can still enjoy the chat room service in the designated chat room. Therefore the user loss of chat room is avoided and the use experience of the user is improved.

No. of Pages : 32 No. of Claims : 10

(12) PATENT APPLICATION PUBLICATION
(19) INDIA
(22) Date of filing of Application :25/07/2012
(21) Application No.6569/DELNP/2012 A
(43) Publication Date : 23/10/2015

(54) Title of the invention : SACROILIAC JOINT FIXATION FUSION SYSTEM

(51) International classification :A61F2/28
(31) Priority Document No :61/335947
(32) Priority Date :13/01/2010
(33) Name of priority country :U.S.A.
(86) International Application No :PCT/US2011/000070
Filing Date :13/01/2011
(87) International Publication No :WO 2011/087912
(61) Patent of Addition to Application Number :NA
Filing Date :NA
(62) Divisional to Application Number :NA
Filing Date :NA

(71)**Name of Applicant :**
1)JCBD LLC
Address of Applicant :3810 North Grant Avenue Loveland CO 80538 U.S.A.
(72)**Name of Inventor :**
1)DONNER Edward Jeffrey

(57) Abstract :
A sacroiliac joint fixation fusion system that provides a method of fixation and fusion of the sacroiliac joint and a sacroiliac joint implant which upon placement within the articular region of the sacroiliac joint facilitates stability and fusion of the sacroiliac joint.

No. of Pages : 72 No. of Claims : 54

(12) PATENT APPLICATION PUBLICATION
(19) INDIA
(22) Date of filing of Application :31/07/2012
(21) Application No.6717/DELNP/2012 A
(43) Publication Date : 23/10/2015

(54) Title of the invention : MOSQUITO TRAP

(51) International classification :A01M1/10,A01M1/20,A01M5/00
(31) Priority Document No :61/299838
(32) Priority Date :29/01/2010
(33) Name of priority country :U.S.A.
(86) International Application No :PCT/US2011/022978
Filing Date :28/01/2011
(87) International Publication No :WO 2011/094581
(61) Patent of Addition to Application Number :NA
Filing Date :NA
(62) Divisional to Application Number :NA
Filing Date :NA

(71)**Name of Applicant :**
1)NORTH CAROLINA STATE UNIVERSITY
Address of Applicant :Campus Box 8210 Raleigh NC 27695 U.S.A.
2)THE ADMINISTRATORS OF THE TULANE EDUCATIONAL FUND
(72)**Name of Inventor :**
1)WESSON Dawn
2)APPERSON Charles
3)PONNUSAMY Loganathan
4)XU Ning
5)SCHAL Coby
6)HOFFMANN Christopher

(57) Abstract :
A mosquito trap includes a container having an open end and a composition positioned in the container. The composition comprises at least one active agent. The mosquito trap also includes an enclosure protruding above the open end of the container. The enclosure includes an opening to access an interior of the enclosure and the open end of the container and at least one active agent.

No. of Pages : 92 No. of Claims : 30

(12) PATENT APPLICATION PUBLICATION
(19) INDIA
(22) Date of filing of Application :26/07/2012
(21) Application No.6615/DELNP/2012 A
(43) Publication Date : 23/10/2015

(54) Title of the invention : GASIFICATION GREY WATER TREATMENT SYSTEMS

(51) International classification :C02F9/00
(31) Priority Document No :12/699004
(32) Priority Date :02/02/2010
(33) Name of priority country :U.S.A.
(86) International Application No :PCT/US2011/022492
Filing Date :26/01/2011
(87) International Publication No :WO 2011/097094
(61) Patent of Addition to Application Number :NA
Filing Date :NA
(62) Divisional to Application Number :NA
Filing Date :NA

(71)**Name of Applicant :**
1)GENERAL ELECTRIC COMPANY
Address of Applicant :1 River Road Schenectady NY 12345 U.S.A.
(72)**Name of Inventor :**
1)KAIN James Scott
2)VUONG Dinh cuong
3)FRASER David Brian
4)PICKETT Timothy Michael

(57) Abstract :
In one embodiment a grey water treatment system includes an oxidation reactor for oxidizing grey water. The grey water treatment system also includes a biological reduction and precipitation system with microbes designed to remove one or more target components from the oxidized grey water.

No. of Pages : 25 No. of Claims : 20

(12) PATENT APPLICATION PUBLICATION
(19) INDIA
(22) Date of filing of Application :26/07/2012
(21) Application No.6616/DELNP/2012 A
(43) Publication Date : 23/10/2015

(54) Title of the invention : TREATMENT OF OBSTRUCTIVE SLEEP APNEA SYNDROME WITH A COMBINATION OF A CARBONIC ANHYDRASE INHIBITOR AND AN ADDITIONAL ACTIVE AGENT

(51) International classification	:A61K31/425,A61K31/54,A61K31/195
(31) Priority Document No	:61/293129
(32) Priority Date	:07/01/2010
(33) Name of priority country	:U.S.A.
(86) International Application No	:PCT/US2011/020588
Filing Date	:07/01/2011
(87) International Publication No	:WO 2011/085256
(61) Patent of Addition to Application Number	:NA
Filing Date	:NA
(62) Divisional to Application Number	:NA
Filing Date	:NA

(71)**Name of Applicant :**
1)VIVUS INC.
Address of Applicant :1172 Castro Street Mountain View CA 94040 U.S.A.
(72)**Name of Inventor :**
1)WILSON Leland
2)TAM Peter
3)NAJARIAN Thomas
4)BOWDEN Charles H.

(57) Abstract :
This invention relates generally to methods and pharmaceutical formulations useful in treating patients suffering from obstructive sleep apnea syndrome (OSAS). Treatment of OSAS is effected by administering a carbonic anhydrase inhibitor to the patient in combination with at least one additional active agent. Examples of additional active agents include modafinil eszopiclone Zolpidem zaleplon and phentermine.

No. of Pages : 22 No. of Claims : 28

(12) PATENT APPLICATION PUBLICATION
(19) INDIA
(22) Date of filing of Application :26/02/2014

(21) Application No.675/MUM/2014 A
(43) Publication Date : 23/10/2015

(54) Title of the invention : A PROCESS FOR PREPARATION OF DABIGATRAN ETEXILATE MESYLATE AND INTERMEDIATES THEREOF.

(51) International classification	:C07D401/12	(71)**Name of Applicant :**
(31) Priority Document No	:NA	**1)MEGAFINE PHARMA (P) LTD.**
(32) Priority Date	:NA	Address of Applicant :4TH FLOOR, SETHNA, 55,
(33) Name of priority country	:NA	MAHARSHI KARVE ROAD, MARINE LINES, MUMBAI - 400
(86) International Application No	:NA	002. MAHARASHTRA, INDIA. Maharashtra India
Filing Date	:NA	(72)**Name of Inventor :**
(87) International Publication No	: NA	**1)MATHAD VIJAYAVITTHAL THIPPANNACHAR**
(61) Patent of Addition to Application Number	:NA	**2)SOLANKI PAVANKUMAR VRAJLAL**
Filing Date	:NA	**3)UPPELLI SEKHAR BABU**
(62) Divisional to Application Number	:NA	**4)SARODE GANESH GITARAM**
Filing Date	:NA	

(57) Abstract :
The present invention relates to an improved process for the preparation of Dabigatran etexilate and its acid addition salts thereof, wherein the said process substantially eliminates the potential impurities. The present invention also relates to an intermediate of Dabigatran etexilate and process for preparation thereof

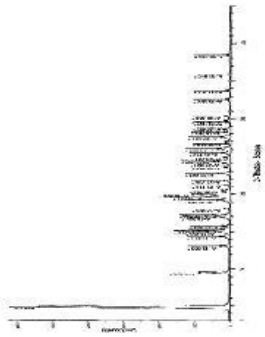

Figure 1

No. of Pages : 56 No. of Claims : 45

(12) PATENT APPLICATION PUBLICATION
(21) Application No.667/MUM/2014 A
(19) INDIA
(22) Date of filing of Application :25/02/2014
(43) Publication Date : 23/10/2015

(54) Title of the invention : STABLE TRANSDERMAL TESTOSTERONE GEL

(51) International classification :C07J1/00
(31) Priority Document No :NA
(32) Priority Date :NA
(33) Name of priority country :NA
(86) International Application No :NA
Filing Date :NA
(87) International Publication No : NA
(61) Patent of Addition to Application Number :NA
Filing Date :NA
(62) Divisional to Application Number :NA
Filing Date :NA

(71)**Name of Applicant :**
1)Intas Pharmaceuticals Ltd.
Address of Applicant :Intas Pharmaceuticals Ltd. 2nd Floor, Chinubhai Centre, Ashram Road, Ahmedabad 380009 Gujarat India
(72)**Name of Inventor :**
1)Ashish Sehgal
2)Pallerla Bhaskar
3)Aditya Patel
4)Dhaval Dadhaniya

(57) Abstract :
The present invention relates to a stable transdermal gel composition comprising Testosterone, a penetration enhancer, a gelling agent with pharmaceutically acceptable excipients. Further, the invention relates to the method of administering the said transdermal gel and its uses thereof.

No. of Pages : 13 No. of Claims : 9

(12) PATENT APPLICATION PUBLICATION
(19) INDIA
(22) Date of filing of Application :25/02/2014

(21) Application No.668/MUM/2014 A
(43) Publication Date : 23/10/2015

(54) Title of the invention : FLOATING SOLAR PHOTOVOLTAIC PLANT

(51) International classification	:H01L31/042	
(31) Priority Document No	:NA	
(32) Priority Date	:NA	
(33) Name of priority country	:NA	
(86) International Application No	:NA	
Filing Date	:NA	
(87) International Publication No	: NA	
(61) Patent of Addition to Application Number	:NA	
Filing Date	:NA	
(62) Divisional to Application Number	:NA	
Filing Date	:NA	

(71)**Name of Applicant :**
1)Tata Consulting Engineers Ltd., India
Address of Applicant :Matulya Centre, A-249, Ist Floor, Senapati Bapat Marg, Lower Parel (West), Mumbai-400 013, India Maharashtra India
(72)**Name of Inventor :**
1)Anjan Bhattacharya
2)Sameer Kulkarni
3)Shibashish Pal
4)Bagmi Mushtaphi
5)Suman Dey

(57) Abstract :
The present subject matter relates to a FSPV plant (100) having a plurality of solar blocks (102) connected to each other in series and parallel to form a solar array. Each solar block consists of a floating arrangement (104) and a module mounting structure (106). The floating arrangement (104) is made up of sealed UPVC pipes (110) or drums (114) tied together by metal strips (101) and connected to lattice girders (112) on which the MMS (106) is mounted. The MMS (106) is made up of a vertical C-channel (C1) mounted on a girder (112); and a slanting channel (C2) welded to channel (C3) collectively forms a mounting frame for the photovoltaic (PV) modules (111) to be mounted thereof. The MMS (106) is further provided with a dampening arrangement having weights W1 & W2 suspended by cables from either side of the mounting frame.

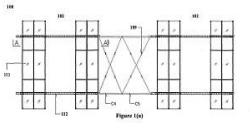

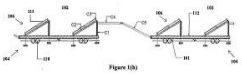

No. of Pages : 47 No. of Claims : 39

(12) PATENT APPLICATION PUBLICATION
(19) INDIA
(22) Date of filing of Application :26/02/2014
(21) Application No.681/MUM/2014 A
(43) Publication Date : 23/10/2015

(54) Title of the invention : ELECTROLYTIC CELLS FOR PRODUCTION OF LOWER CHLORIDES OF TITANIUM AND TITANIUM THEREFROM

(51) International classification	:A61K 8/37	(71)**Name of Applicant :**
(31) Priority Document No	:NA	**1)GHARDA KEKI HORMUSJI**
(32) Priority Date	:NA	Address of Applicant :GHARDA HOUSE, 48 HILL ROAD, BANDRA (WEST), MUMBAI 400050, MAHARASHTRA, INDIA. Maharashtra India
(33) Name of priority country	:NA	
(86) International Application No	:NA	(72)**Name of Inventor :**
Filing Date	:NA	**1)GHARDA KEKI HORMUSJI**
(87) International Publication No	: NA	
(61) Patent of Addition to Application Number	:NA	
Filing Date	:NA	
(62) Divisional to Application Number	:NA	
Filing Date	:NA	

(57) Abstract :
A system for production of lower chlorides of titanium and titanium therefrom is disclosed in the present disclosure. The system comprises a reduction cell module, an electrolytic cell module, and a furnace module. The reduction cell is configured to perform the reduction reaction of TiCl4 with H2. The system further comprises an electrolytic cell module in fluid communication with the reduction cell module. The electrolytic cell module further configured to receive lower chlorides of Ti formed in the reduction cell module and perform the electrolysis of the lower chlorides of Ti and provide a Ti metal slurry. The electrolytic cell further comprises a furnace module that comprises an enclosure for housing a crucible. The crucible is configured to receive the Ti metal slurry from the electrolytic cell module. The furnace module further comprises at least one heater configured to heat the crucible to convert Ti metal slurry into molten Ti for evacuation therefrom.

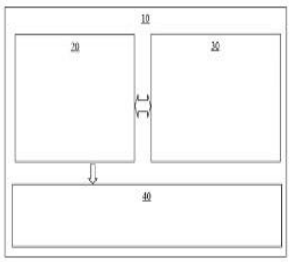

FIGURE 1

No. of Pages : 25 No. of Claims : 11

(12) PATENT APPLICATION PUBLICATION
(19) INDIA
(22) Date of filing of Application :06/01/2014
(21) Application No.35/MUM/2014 A
(43) Publication Date : 23/10/2015

(54) Title of the invention : A SYSTEM FOR CULTIVATION OF ALGAE USING TRAPPED FLUE GAS

(51) International classification :B01D53/14
(31) Priority Document No :NA
(32) Priority Date :NA
(33) Name of priority country :NA
(86) International Application No :NA
Filing Date :NA
(87) International Publication No : NA
(61) Patent of Addition to Application Number :NA
Filing Date :NA
(62) Divisional to Application Number :NA
Filing Date :NA

(71)**Name of Applicant :**
1)NORTH MAHARASHTRA UNIVERSITY
Address of Applicant :NORTH MAHARASHTRA UNIVERSITY PB-80, UMAVINAGAR, JALGAON, 425001, MAHARASHTRA, INDIA. Maharashtra India
(72)**Name of Inventor :**
1)PRAVIN R. PURANIK
2)PRAMOD P. MAHULKAR
3)PRACHI A. ZAWAR
4)VIVEK S. JAVALKOTE
5)BAPUSAHEB S WAGHMODE

(57) Abstract :
A safe, easy-to-use, cost effective liquid medium capable of dissolution of maximum amount of flue gases is described. The components of the liquid medium are also preferably industrial waste chemicals. The medium is used for developing a process for trapping of flue gases generated due to combustion of fuel in generators. The maximum trapping capacity of the medium is achieved and the saturated medium is used for growing algal culture by releasing into open raceway ponds. Optionally, other substances, enhancing algal growth may be added to the saturated medium. Harvested culture is dried in natural sunlight and final biomass in powder form is produced.

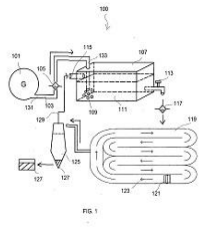

No. of Pages : 21 No. of Claims : 10

(12) PATENT APPLICATION PUBLICATION
(19) INDIA
(22) Date of filing of Application :24/02/2014
(21) Application No.636/MUM/2014 A
(43) Publication Date : 23/10/2015

(54) Title of the invention : ARRANGEMENT FOR PACKAGING THE ENGINE OF AUTOMOBILES.

(51) International classification :A61M5/20
(31) Priority Document No :NA
(32) Priority Date :NA
(33) Name of priority country :NA
(86) International Application No :NA
Filing Date :NA
(87) International Publication No : NA
(61) Patent of Addition to Application Number :NA
Filing Date :NA
(62) Divisional to Application Number :NA
Filing Date :NA

(71)**Name of Applicant :**
1)MAHINDRA & MAHINDRA LIMITED
Address of Applicant :R&D CENTER, AUTOMOTIVE DIVISION, 89, M.I.D.C., SATPUR, NASHIK - 322007 MAHARASHTRA, INDIA. Maharashtra India
(72)**Name of Inventor :**
1)RAWTE SAMIR RAMESH
2)JANAKIRAMAN, RADHAKRISHNAN

(57) Abstract :
The present disclosure provides an arrangement for packaging an engine of a vehicle. The arrangement comprises a frame having a front end and a rear end, a vehicle body secured on the frame, a first pair of wheels coupled to the frame near the front end thereof and a second pair of wheels coupled to the frame near the rear end thereof, the first and second pair of wheels adapted to support the frame, and the engine transversely disposed with respect to the longitudinal axis of the frame, and drivingly coupled to at least one of the first pair of wheels and the second pair of wheels.

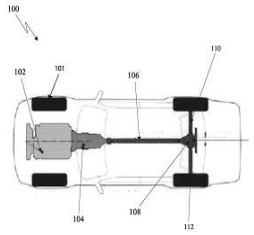

FIGURE 1

No. of Pages : 34 No. of Claims : 11

(12) PATENT APPLICATION PUBLICATION
(19) INDIA
(22) Date of filing of Application :24/02/2014
(21) Application No.638/MUM/2014 A
(43) Publication Date : 23/10/2015

(54) Title of the invention : SELF POSITIONING APPARATUS FOR HYDRAULIC LASH ADJUSTER IN ENGINE ASSEMBLY AND METHOD THEREOF

(51) International classification	:F01L1/14
(31) Priority Document No	:NA
(32) Priority Date	:NA
(33) Name of priority country	:NA
(86) International Application No	:NA
Filing Date	:NA
(87) International Publication No	: NA
(61) Patent of Addition to Application Number	:NA
Filing Date	:NA
(62) Divisional to Application Number	:NA
Filing Date	:NA

(71)**Name of Applicant :**
1)MAHINDRA & MAHINDRA LIMITED
Address of Applicant :R & D CENTER, AUTOMOTIVE SECTOR, 89, M.I.D.C., SATPUR, NASHIK - 422 007, MAHARASHTRA, INDIA. Maharashtra India
(72)**Name of Inventor :**
1)HEMANT MURALIDHAR PATIL
2)SHAILESH ULHAS VAIDYA
3)AJAY SHIWNATH SHEJWAL

(57) Abstract :
The invention relates to a self positioning apparatus for hydraulic lash adjuster in engine assembly. The said apparatus comprises a longitudinal member (5) with top flat surface with flat ends (10) having in between throughout the length downwardly extended ribs (6) so as to provided at lower side a longitudinal slot formed by the said ribs. A number vertical slot,(B) both side, matching with the bridges in the cylinder head and number of pair of lash slots(L) .adjacent to said bridge slot, both sides, matching with valve lash positions in such a way that when the said self positioning apparatus placed on the cylinder head with said ends resting on the cylinder head faces the profile of the said ribbings (6) fits in the bridges of the cylinder head and guides the hydraulic lash adjuster till the valve tip of cylinder head.

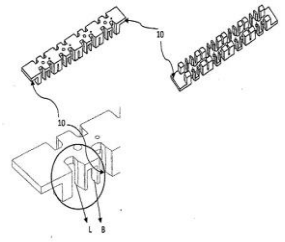

Fig. 6

No. of Pages : 15 No. of Claims : 4

(12) PATENT APPLICATION PUBLICATION
(19) INDIA
(22) Date of filing of Application :25/02/2014
(21) Application No.665/MUM/2014 A
(43) Publication Date : 23/10/2015

(54) Title of the invention : AN ORO-DISPERSIBLE TABLET AND A PROCESS FOR PREPRARING THE SAME.

(51) International classification :A61K9/20
(31) Priority Document No :NA
(32) Priority Date :NA
(33) Name of priority country :NA
(86) International Application No :NA
Filing Date :NA
(87) International Publication No : NA
(61) Patent of Addition to Application Number :NA
Filing Date :NA
(62) Divisional to Application Number :NA
Filing Date :NA

(71)**Name of Applicant :**
1)MR. PRASANT DILIPKUMAR JADAV
Address of Applicant :GOVERNMENT HOUSE, SEC.-3, TYPE 4, ROOM NO. 5, ZANDA CHOWK, SILVASA, UT OF DADRA AND NAGAR HAVELI-396 230, INDIA. Maharashtra India
2)MRS. VISHAKHA SAMIR HASTAK
(72)**Name of Inventor :**
1)MR. PRASANT DILIPKUMAR JADAV
2)MRS. VISHAKHA SAMIR HASTAK

(57) Abstract :
The present disclosure relates to an oro-dispersible tablet comprising: at least one calcium containing compound; at least one binder; at least one disintegrant; and at least one pharmaceutically acceptable excipient. The tablet is characterized in that, the ratio of the binder to the calcium containing compound ranges between 1:20 and 1:25; the ratio of the disintegrant to the calcium containing compound ranges between 1:2 and 1:4; and the ratio of the binder to the disintegrant ranges between 1:6 and 1:11. The present disclosure relates to a process for preparing the oro-dispersible tablet.

No. of Pages : 32 No. of Claims : 23

(12) PATENT APPLICATION PUBLICATION
(19) INDIA
(22) Date of filing of Application :25/02/2014

(21) Application No.666/MUM/2014 A
(43) Publication Date : 23/10/2015

(54) Title of the invention : PHARMACEUTICAL COMPOSITIONS OF VILAZODONE

(51) International classification	:C07D405/12	(71)**Name of Applicant :**
(31) Priority Document No	:NA	**1)Intas Pharmaceuticals Ltd.**
(32) Priority Date	:NA	Address of Applicant :Intas Pharmaceuticals Ltd. 2nd Floor,
(33) Name of priority country	:NA	Chinubhai Centre, Ashram Road, Ahmedabad 380009 Gujarat
(86) International Application No	:NA	ndia
Filing Date	:NA	(72)**Name of Inventor :**
(87) International Publication No	: NA	**1)Ashish Sehgal**
(61) Patent of Addition to Application Number	:NA	**2)Satyavan Shivajirao Dhavale**
Filing Date	:NA	**3)Alpesh Kirtilal Chhunchha**
(62) Divisional to Application Number	:NA	**4)Sumit Kumar Verma**
Filing Date	:NA	**5)Mrugesh Jitendrabhai Shah**

(57) Abstract :
The present invention relates to a pharmaceutical composition comprising vilazodone hydrochloride, wherein the blend uniformity of the said composition is between 95% and 105%. Further it relates to the process for the preparation of the said composition and uses thereof.

Abstract

The present invention relates to a pharmaceutical composition comprising vilazodone hydrochloride, wherein the blend uniformity of the said composition is between 95% and 105%. Further it relates to the process for the preparation of the said composition and uses thereof.

No. of Pages : 10 No. of Claims : 9

(12) PATENT APPLICATION PUBLICATION
(19) INDIA
(22) Date of filing of Application :24/02/2014
(21) Application No.634/MUM/2014 A
(43) Publication Date : 23/10/2015

(54) Title of the invention : CLAMPING DEVICE.

(51) International classification :B66F 9/18
(31) Priority Document No :13177415.0
(32) Priority Date :22/07/2013
(33) Name of priority country :EPO
(86) International Application No :NA
Filing Date :NA
(87) International Publication No : NA
(61) Patent of Addition to Application Number :NA
Filing Date :NA
(62) Divisional to Application Number :NA
Filing Date :NA

(71)**Name of Applicant :**
1)NARR BETEILIGUNGS GMBH
Address of Applicant :DETTINGER STRASSE 129, 73230 KIRCHHEIM/TECK, GMRMANY Germany
(72)**Name of Inventor :**
1)MAUCH PETER

(57) Abstract :
The clamping device (1) according to the invention is used for the clamping of a work piece and comprises a chuck (2) and a collet (3) that is positioned inside the chuck (2). A bayonet fastener is provided for mounting the collet in or dismounhng it from the chuck (2) without the aid of tools.

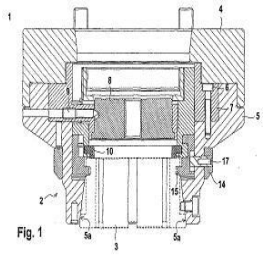

Fig. 1

No. of Pages : 18 No. of Claims : 12

(12) PATENT APPLICATION PUBLICATION
(19) INDIA
(22) Date of filing of Application :24/02/2014
(21) Application No.635/MUM/2014 A
(43) Publication Date : 23/10/2015

(54) Title of the invention : OPTICAL DEVICE.

(51) International classification :G02B21/00
(31) Priority Document No :102013003660.7
(32) Priority Date :02/03/2013
(33) Name of priority country :Germany
(86) International Application No :NA
Filing Date :NA
(87) International Publication No : NA
(61) Patent of Addition to Application Number :NA
Filing Date :NA
(62) Divisional to Application Number :NA
Filing Date :NA

(71)**Name of Applicant :**
1)MBDA DEUTSCHLAND GMBH
Address of Applicant :HAGENAUER FORST 27, 86529 SCHROBENHAUSEN, GERMANY Germany
(72)**Name of Inventor :**
1)CHRISTOPH SENFT
2)ALFRED FENDT
3)JUERGEN ZOZ

(57) Abstract :
The present invention relates to an optical device (1), in particular, for a seeker head (2) of a missile, said optical device comprising at least one optical sensor (3) with a plurality of pixels, at least one light source (4), at least one detection device (5), and an optical system (6), wherein the light source (4) is configured to illuminate by means of the optical system (6) an object that can be mapped by means of the optical system (6) on at least one subarea of a predefined pixel of the optical sensor (3); and wherein the detection device (5) is configured to detect the light that is emitted from the light source (4) and is reflected at the object.

Fig. 1

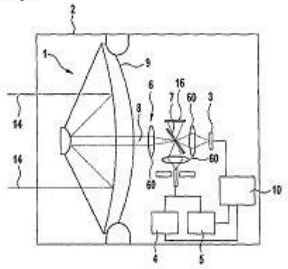

No. of Pages : 15 No. of Claims : 10

(12) PATENT APPLICATION PUBLICATION
(21) Application No.644/MUM/2014 A
(19) INDIA
(22) Date of filing of Application :25/02/2014
(43) Publication Date : 23/10/2015

(54) Title of the invention : PRELOAD ADJUSTMENT FOR FRONT FORK

(51) International classification :B62K25/08
(31) Priority Document No :NA
(32) Priority Date :NA
(33) Name of priority country :NA
(86) International Application No :NA
Filing Date :NA
(87) International Publication No : NA
(61) Patent of Addition to Application Number :NA
Filing Date :NA
(62) Divisional to Application Number :NA
Filing Date :NA

(71)**Name of Applicant :**
1)ENDURANCE TECHNOLOGIES PRIVATE LIMITED
Address of Applicant :E 93, M.I.D.C INDUSTRIAL AREA, WALUJ, AURANGABAD 431 136 MAHARASHTRA. Maharashtra India
(72)**Name of Inventor :**
1)GIRISH KOKANE
2)NIZAR AHAMED
3)KHARUL RAVINDRA VYANKATRAO

(57) Abstract :
A preload adjustment forfront fork with a main spring and a damper of a two wheeler comprising an actuation mechanism, a preload adjuster, a non return valve wherein said nonreturn valve is mounted on said main spring of the front fork through said preload adjuster and a spacer. The actuation mechanism comprises an actuation lever, a reservoir having a main hole, a microhole, a return spring, a piston, hydraulic lines and a banjo bolt. When pressure from hydraulic mechanism is transmitted to said preload adjuster through said nonreturn valve where said nonreturn valves acts as a hydraulic lock and said preload adjuster pushes main spring of said front fork via said spacer˜. The stroke of the grooved preload adjuster is restricted by the fork bolt on top and a washer mounted on circlip on bottom.

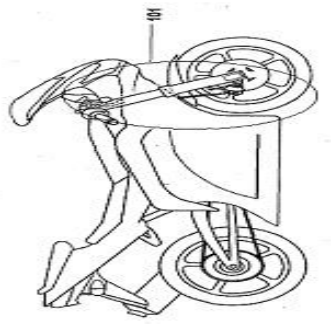

Figure 1

No. of Pages : 20 No. of Claims : 8

(12) PATENT APPLICATION PUBLICATION
(19) INDIA
(22) Date of filing of Application :25/02/2014
(21) Application No.645/MUM/2014 A
(43) Publication Date : 23/10/2015

(54) Title of the invention : DRY SANITATION SYSTEM

(51) International classification :B08B3/14
(31) Priority Document No :NA
(32) Priority Date :NA
(33) Name of priority country :NA
(86) International Application No :NA
Filing Date :NA
(87) International Publication No : NA
(61) Patent of Addition to Application Number :3711/MUM/2013
Filed on :26/11/2013
(62) Divisional to Application Number :NA
Filing Date :NA

(71)**Name of Applicant :**
1)INDIAN INSTITUTE OF TECHNOLOGY,BOMBAY.
Address of Applicant :INDIAN INSTITUTE OF TECHNOLOGY BOMBAY, POWAI MUMBAI 400076, MAHARASHTRA, INDIA Maharashtra India
(72)**Name of Inventor :**
1)KISHORILAL MUNSHI

(57) Abstract :
The present invention is a dry sanitation system which comprises of a squat type seat portion comprising a front port for collecting urine, a first rear port and a second rear port for collecting solids and washing water respectively. A separator below the seat portion to separate solid and washing water into solid pit and washing water pit respectively and a urine pit to collect urine and a compositing space to carry out aerobic decomposition of the solid waste. The pits can be totally underground, partially underground or totally above the ground, with provision of access to empty the pits whenever required. The dry sanitation system is also useful to dispose disposable sanitary pads and disposable diapers. This system has foot rest with inclination to support heel of the users especially elderly person and making the squatting position comfortable.

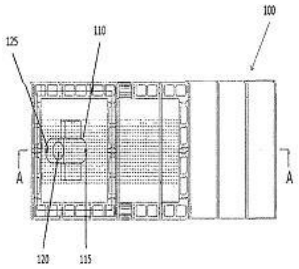

FIG 1

No. of Pages : 21 No. of Claims : 14

(12) PATENT APPLICATION PUBLICATION
(19) INDIA
(22) Date of filing of Application :24/02/2014

(21) Application No.639/MUM/2014 A
(43) Publication Date : 23/10/2015

(54) Title of the invention : DISPLAYING ADVERTISEMENTS ON A MOBILE DEVICE

(51) International classification :H04M3/00
(31) Priority Document No :NA
(32) Priority Date :NA
(33) Name of priority country :NA
(86) International Application No :NA
Filing Date :NA
(87) International Publication No : NA
(61) Patent of Addition to Application Number :NA
Filing Date :NA
(62) Divisional to Application Number :NA
Filing Date :NA

(71)**Name of Applicant :**
1)Jay Jain
Address of Applicant :88, Jaora Compound Indore, Madhya Pradesh, India- 452001 Madhya Pradesh India
(72)**Name of Inventor :**
1)Jay Jain

(57) Abstract :
The embodiments herein disclose methods and system for enabling users to view advertisements on a User Equipment (UE) before availing a service from a network operator associated with the mobile communication device, wherein the user may avail the service at a discounted rate on viewing an advertisement.

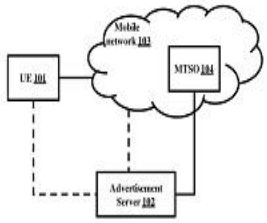

FIG.1

No. of Pages : 42 No. of Claims : 23

(12) PATENT APPLICATION PUBLICATION
(19) INDIA
(22) Date of filing of Application :25/02/2014
(21) Application No.646/MUM/2014 A
(43) Publication Date : 23/10/2015

(54) Title of the invention : A CYLINDER HEAD COMPRISING A SHROUD

(51) International classification :F01P1/02
(31) Priority Document No :13/863,743
(32) Priority Date :16/04/2013
(33) Name of priority country :U.S.A.
(86) International Application No :NA
Filing Date :NA
(87) International Publication No : NA
(61) Patent of Addition to Application Number :NA
Filing Date :NA
(62) Divisional to Application Number :NA
Filing Date :NA

(71)**Name of Applicant :**
1)DEERE & COMPANY
Address of Applicant :ONE JOHN DEERE PLACE, MOLINE, IIIINOIS, 61265-8098, USA U.S.A.
(72)**Name of Inventor :**
1)WARRINGTON DANNY A
2)GONSOWSKI JOSEPH R
3)HAALAND ERIC J

(57) Abstract :
Disclosed is an engine that comprises an engine block, and the engine block comprises a cylinder. The engine further comprises a cylinder head mounted to the engine block, and the cylinder head comprises an intake valve seat and a shroud. Further yet, the engine comprises a combustion chamber formed at least partially by the cylinder and the cylinder head. The intake valve is configured to travel between a fully closed position seated against the; intake valve seat and an opened position displaced from the intake valve seat, thus allowing intake flow through the intake valve seat into the combustion chamber. The shroud only partially surrounds a periphery of the valve and extends along at least a portion of the travel of the intake valve so as to restrict intake flow along only a portion of the intake valve.

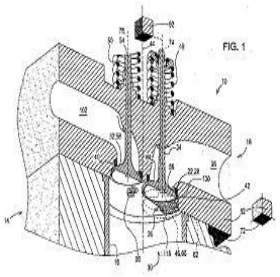

No. of Pages : 19 No. of Claims : 20

(12) PATENT APPLICATION PUBLICATION
(21) Application No.647/MUM/2014 A
(19) INDIA
(22) Date of filing of Application :25/02/2014
(43) Publication Date : 23/10/2015

(54) Title of the invention : A KERNEL EXTRACTION MECHANISM FOR A WORK VEHICLE

(51) International classification	:B01J 19/08	(71)**Name of Applicant :**
(31) Priority Document No	:NA	**1)DEERE & COMPANY**
(32) Priority Date	:NA	Address of Applicant :ONE JOHN DEERE PLACE, MOLINE, IIIINOIS, 61265-8098, USA U.S.A.
(33) Name of priority country	:NA	(72)**Name of Inventor :**
(86) International Application No	:NA	**1)JADHAV SNEHALRAO**
Filing Date	:NA	**2)BECKER KLAUS E**
(87) International Publication No	: NA	**3)PATIL PRAMOD**
(61) Patent of Addition to Application Number	:NA	
Filing Date	:NA	
(62) Divisional to Application Number	:NA	
Filing Date	:NA	

(57) Abstract :
The present invention discloses a kernel extraction mechanism (10), for a work vehicle, which functionally cooperates with a conveyor arrangement for conveying articles to a delivery end. The kernel extraction mechanism (10) includes an elongated housing (12) formed by an arcuate surface (22) configured between adjacent planar surfaces and a pair of mounting plates (14) to define an enclosed space therebetween. Each of the arcuate surfaces (22) defines a plurality of recesses. An eccentric shaft is positioned within the enclosed space to support a plurality of displaceable members (16), associated with one of the arcuate surfaces (22). The displaceable members (16) are displaceable between a projected configuration and a retracted configuration. Optionally, a plurality of fixed member (18) is provided so as to project from each of the planar surfaces.

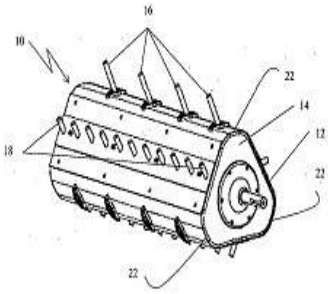

FIGURE 2

No. of Pages : 19 No. of Claims : 19

(12) PATENT APPLICATION PUBLICATION
(21) Application No.651/MUM/2014 A
(19) INDIA
(22) Date of filing of Application :25/02/2014
(43) Publication Date : 23/10/2015

(54) Title of the invention : PHARMACEUTICAL COMPOSITIONS OF SITAGLIPTIN

(51) International classification :A61K31/4985
(31) Priority Document No :NA
(32) Priority Date :NA
(33) Name of priority country :NA
(86) International Application No :NA
Filing Date :NA
(87) International Publication No : NA
(61) Patent of Addition to Application Number :NA
Filing Date :NA
(62) Divisional to Application Number :NA
Filing Date :NA

(71)**Name of Applicant :**
1)CADILA HEALTHCARE LIMITED
Address of Applicant :ZYDUS TOWER, SATELLITE CROSS ROAD, AHMEDABAD - 380015, GUJARAT, INDIA Gujarat India
(72)**Name of Inventor :**
1)KHERA BRIJ

(57) Abstract :
The present invention relates to stable oral pharmaceutical compositions of sitagliptin base and processes for the preparation thereof.

No. of Pages : 28 No. of Claims : 10

(12) PATENT APPLICATION PUBLICATION
(19) INDIA
(22) Date of filing of Application :25/02/2014

(21) Application No.661/MUM/2014 A
(43) Publication Date : 23/10/2015

(54) Title of the invention : A COMPUTER IMPLEMENTED SYSTEM AND METHOD TO NON-INTRUSIVELY SENSE WORK PROCESSES

(51) International classification	:G06F 12/00
(31) Priority Document No	:NA
(32) Priority Date	:NA
(33) Name of priority country	:NA
(86) International Application No	:NA
Filing Date	:NA
(87) International Publication No	: NA
(61) Patent of Addition to Application Number	:NA
Filing Date	:NA
(62) Divisional to Application Number	:NA
Filing Date	:NA

(71)**Name of Applicant :**
1)TATA CONSULTANCY SERVICES LIMITED
Address of Applicant :Nirmal Building, 9th Floor, Nariman Point, Mumbai 400 021, Maharashtra, India. Maharashtra India
(72)**Name of Inventor :**
1)KUMAR, Anand
2)NORI Kesav Vithal
3)ZOPE Nikhil Ravindranath

(57) Abstract :

A method(s) and system(s) provide a non-intrusive sensing and instrumentation of work processes performed in computing environment. The method includes providing a pre-defined collection of work processes covering the entire activities to be performed by the end user on the IT system (604). Each of the process steps of the work processes are assigned with a meta-data. The method further includes obtaining a plurality of measures for each of the process step and obtaining task performance metrics by analyzing the plurality of measures. Furthermore, the method includes collecting a set of actions being performed by the user on the IT system (604). The method further includes identifying the work processes performed by the user and subsequently, identifying the task performance measures of the user by comparing the identified work processes with the task performance metrics.

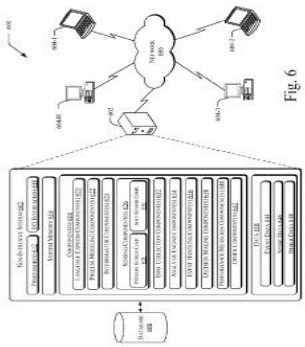

Fig. 6

No. of Pages : 38 No. of Claims : 21

(12) PATENT APPLICATION PUBLICATION
(19) INDIA
(22) Date of filing of Application :25/02/2014

(21) Application No.662/MUM/2014 A
(43) Publication Date : 23/10/2015

(54) Title of the invention : A COMPUTER IMPLEMENTED SYSTEM AND METHOD OF INSTRUMENTATION FOR SOFTWARE APPLICATIONS

(51) International classification	:G06F17/00	(71)**Name of Applicant :**
(31) Priority Document No	:NA	**1)TATA CONSULTANCY SERVICES LIMITED**
(32) Priority Date	:NA	Address of Applicant :Nirmal Building, 9th Floor, Nariman
(33) Name of priority country	:NA	Point, Mumbai 400 021.Maharashtra, India Maharashtra India
(86) International Application No	:NA	(72)**Name of Inventor :**
Filing Date	:NA	**1)KUMAR, Anand**
(87) International Publication No	: NA	**2)KULKARNI, Vinay**
(61) Patent of Addition to Application Number	:NA	
Filing Date	:NA	
(62) Divisional to Application Number	:NA	
Filing Date	:NA	

(57) Abstract :
A method(s) and system(s) of monitoring and logging of various identified events of the operating system or the software application hosted on the operating system is disclosed. The method includes configuring the events associated with at least one event handler for monitoring. The method further includes assigning the at least one event handler to active processes of an operating system for handling of the events. Further, the method includes capturing of events by a different daemons and collecting the captured events. To this end, the captured similar events are grouped in one or more groups. The method further includes filtering of collected events based on a definable filter configuration and generating a dashboard representation of the filtered events. The dashboard representations of filtered events are then reported to the user.

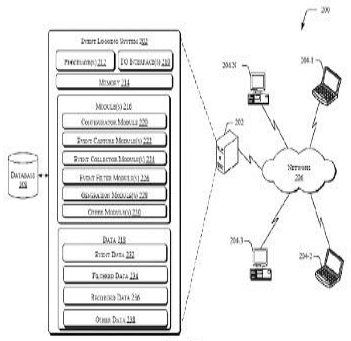

Fig. 2

No. of Pages : 29 No. of Claims : 19

(12) PATENT APPLICATION PUBLICATION
(19) INDIA
(22) Date of filing of Application :25/02/2014

(21) Application No.649/MUM/2014 A
(43) Publication Date : 23/10/2015

(54) Title of the invention : CHAISE LONGUE CUM BAGGAGE CARRIER

(51) International classification	:B62B5/00	
(31) Priority Document No	:NA	
(32) Priority Date	:NA	
(33) Name of priority country	:NA	
(86) International Application No	:NA	
Filing Date	:NA	
(87) International Publication No	: NA	
(61) Patent of Addition to Application Number	:NA	
Filing Date	:NA	
(62) Divisional to Application Number	:NA	
Filing Date	:NA	

(71)**Name of Applicant :**
1)ANKIT NAYAK
Address of Applicant :C/O SHARAD PRADHAN H.NO - 1 SURUCHI NAGAR, KOTRA ROAD, BHOPAL-462003 Madhya Pradesh India
(72)**Name of Inventor :**
1)ANKIT NAYAK
2)SHARAD K. PRADHAN

(57) Abstract :
The invention relates to convertible luggage trolley which includes vertically placed back rest frame providing support to luggage, foldable tubular horizontal rest frame onto which canvas cloth is mounted providing chair like structure, foldable luggage carrier base for holding luggage on trolley, belts to provide more holding grip to the luggage and the entire structure is designed in such a way that anytime invention can be used as simple luggage trolley by folding horizontal rest frame or can be used as chair by unfolding horizontal rest frame and simultaneously both as chair and luggage carrier by unfolding horizontal rest frame and luggage carrier base.

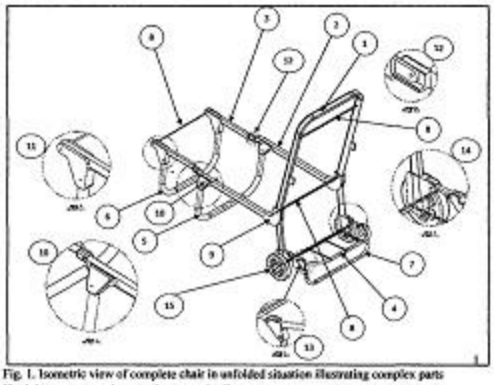

Fig. 1. Isometric view of complete chair in unfolded situation illustrating complex parts like joints are zoomed out to give more details.

No. of Pages : 15 No. of Claims : 6

(12) PATENT APPLICATION PUBLICATION
(21) Application No.2016/CHE/2014 A
(19) INDIA
(22) Date of filing of Application :18/04/2014
(43) Publication Date : 23/10/2015

(54) Title of the invention : A METHOD FOR SELECTING A CHARACTER ASSOCIATED WITH A KEY IN AN ELECTRONIC DEVICE

(51) International classification :G06F3/00
(31) Priority Document No :NA
(32) Priority Date :NA
(33) Name of priority country :NA
(86) International Application No :NA
Filing Date :NA
(87) International Publication No : NA
(61) Patent of Addition to Application Number :NA
Filing Date :NA
(62) Divisional to Application Number :NA
Filing Date :NA

(71)**Name of Applicant :**
1)Samsung R & D Institute India- Bangalore
Address of Applicant :# 2870, Orion Building, Bagmane Constellation Business Park, Outer Ring Road, Doddanekundi Circle, Marathahalli Post, Bangalore-560037 Karnataka India
(72)**Name of Inventor :**
1)Nagaraju Samudrala
2)Ashutosh Kumar

(57) Abstract :
A method select a character based on an extent level identified in a gesture performed on a key displayed in an electronic device is provided. Each key is associated with one or more characters. Further, the method includes displaying the pre-defined direction and the associated characters in a matrix keypad. When a user performs a gesture to input a character, then the method determines the character associated with the extent level of the performed gesture and displays the character. FIG. 3

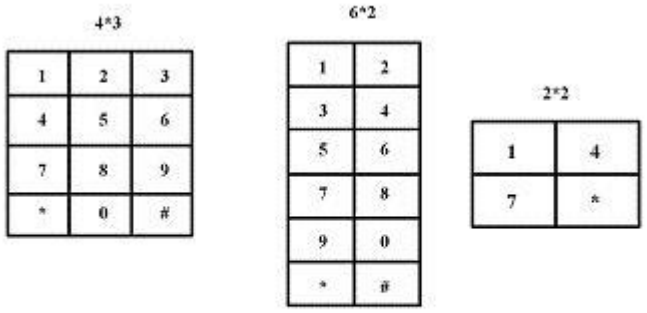

FIG. 3

No. of Pages : 52 No. of Claims : 21

(12) PATENT APPLICATION PUBLICATION
(19) INDIA
(22) Date of filing of Application :27/05/2014
(21) Application No.3967/CHENP/2014 A
(43) Publication Date : 23/10/2015

(54) Title of the invention : SYSTEM AND METHOD FOR MANUFACTURING A HONEYCOMB BODY

(51) International classification :F01N3/28,B01J35/04
(31) Priority Document No :NA
(32) Priority Date :NA
(33) Name of priority country :NA
(86) International Application No :PCT/CN2011/081618
Filing Date :01/11/2011
(87) International Publication No :WO 2013/063754
(61) Patent of Addition to Application Number :NA
Filing Date :NA
(62) Divisional to Application Number :NA
Filing Date :NA

(71)**Name of Applicant :**
1)BASF CORPORATION
Address of Applicant :100 Campus Drive Florham Park New Jersey 07932 U.S.A.
(72)**Name of Inventor :**
1)CHU Gengsheng
2)DENG Shuiping
3)ZHANG Yuqin
4)LIU Ye
5)TAO Weichang
6)BARTHOLOMAEUS Peter

(57) Abstract :
A system and method for manufacturing a honeycomb body is provided. Said system comprising: a forming mold (1) with a plurality of sub molds which are movable so that they can be opened and closed; a tightening mold (6) for tightening said forming mold (1); rolling pin(s) (2) which can be inserted into and pulled out of the inner volume of said forming mold (1) and can rotate around a rotation axis; wherein said tightening mold (6) has a shape that cooperates with the shape of said forming mold (1) so that an action of said tightening mold (6) causes tightening of said forming mold (1).

No. of Pages : 16 No. of Claims : 9

(12) PATENT APPLICATION PUBLICATION
(21) Application No.3968/CHENP/2014 A
(19) INDIA
(22) Date of filing of Application :27/05/2014
(43) Publication Date : 23/10/2015

(54) Title of the invention : FLUOROIMMUNOASSAY METHOD USING POLYPEPTIDE COMPLEX CONTAINING FLUOROLABELED ANTIBODY VARIABLE REGION

(51) International classification	:G01N33/533,G01N21/64,G01N21/78
(31) Priority Document No	:2011241402
(32) Priority Date	:02/11/2011
(33) Name of priority country	:Japan
(86) International Application No	:PCT/JP2012/007025
Filing Date	:01/11/2012
(87) International Publication No	:WO 2013/065314
(61) Patent of Addition to Application Number	:NA
Filing Date	:NA
(62) Divisional to Application Number	:NA
Filing Date	:NA

(71)**Name of Applicant :**
1)USHIO DENKI KABUSHIKI KAISHA
Address of Applicant :2 6 1 Ote machi Chiyoda ku Tokyo 1008150 Japan
(72)**Name of Inventor :**
1)UEDA Hiroshi
2)ABE Ryoji
3)TAKAGI Hiroaki

(57) Abstract :
This invention addresses the problem of providing an immunoassay method that does not require a solid phase immobilization step or a washing step makes it possible to quantitatively measure the target substance in liquid phase in a speedy and simple manner makes it possible to visualize antigens and has high detection sensitivity. This problem is resolved by: sequentially performing (a) a step for bringing in liquid phase into contact with antigens in the measurement sample a complex comprising a polypeptide containing an antibody heavy chain variable region and a polypeptide containing an antibody light chain variable region in which the polypeptide containing an antibody heavy chain variable region and/or the polypeptide containing an antibody light chain variable region is labeled by a fluorochrome (b) a step for detecting the fluorescence of the fluorochrome or measuring the fluorescence intensity and (c) a step for calculating the amount of antigens contained in the test subject or visualizing the antigens using as an indicator the fact that the antigen concentration and the fluorescence intensity of the fluorochrome are positively correlated; and measuring the concentration of the target antigen present in the tested substance.

No. of Pages : 104 No. of Claims : 17

(12) PATENT APPLICATION PUBLICATION
(21) Application No.3969/CHENP/2014 A
(19) INDIA
(22) Date of filing of Application :27/05/2014
(43) Publication Date : 23/10/2015

(54) Title of the invention : ELECTRIC MOTOR FOR VEHICLE

(51) International classification :H02K9/06,H02K5/10,H02K9/26
(31) Priority Document No :2011265688
(32) Priority Date :05/12/2011
(33) Name of priority country :Japan
(86) International Application No :PCT/JP2012/079802
Filing Date :16/11/2012
(87) International Publication No:WO 2013/084695
(61) Patent of Addition to Application Number :NA
Filing Date :NA
(62) Divisional to Application Number :NA
Filing Date :NA

(71)**Name of Applicant :**
1)TOYO ELECTRIC MFG. CO. LTD.
Address of Applicant :4 16 Yaesu 1 chome Chuo ku Tokyo 1030028 Japan
(72)**Name of Inventor :**
1)YAMAGUCHI Toshihiro
2)IBARAKI Tamotsu

(57) Abstract :
An electric motor (1) for a vehicle to which a fan (3) integrally rotatable with a rotor (2) is provided on one end in the axial direction (AX1) of the rotor (2) a bracket (6) for accommodating the fan (3) being joined on one end in the axial direction (AX1) of a stator frame (5) for accommodating a stator (4) and an outside air inlet (6a) for introducing air from the outside toward the fan (3) and a dust emission outlet (6b) for emitting dust contained in the air which has been led to the outer peripheral side of the fan (3) being provided to the bracket (6). An expanded section (6e) having an inner peripheral surface (6d) bulging on the outer peripheral side in the radial direction beyond the inner peripheral surface (5a) of the stator frame (5) is provided to the bracket (6) and at least part of the dust emission outlet (6b) opens on the inner peripheral surface (6d) of the expanded section (6e).

No. of Pages : 17 No. of Claims : 6

(12) PATENT APPLICATION PUBLICATION
(19) INDIA
(22) Date of filing of Application :15/04/2014
(21) Application No.1963/CHE/2014 A
(43) Publication Date : 23/10/2015

(54) Title of the invention : BROOM STICK MILL

(51) International classification :B02C
(31) Priority Document No :NA
(32) Priority Date :NA
(33) Name of priority country :NA
(86) International Application No :NA
Filing Date :NA
(87) International Publication No : NA
(61) Patent of Addition to Application Number :NA
Filing Date :NA
(62) Divisional to Application Number :NA
Filing Date :NA

(71)**Name of Applicant :**
1)PRAHLAD, N. JOSHI
Address of Applicant :SONA ELECTRICAL BUILDING, GROUND FLOOR, NEAR ANJANEYASWAMY TEMPLE, AT SHETTIHALLI, JALAHALLI WEST, BENGALURU - 560 015 Karnataka India
(72)**Name of Inventor :**
1)PRAHLAD, N. JOSHI

(57) Abstract :
The present invention discloses a broomstick manufacturing device with high output speed. The device comprises a supporting stand, a bearing assembly, a main shaft, a wheel, a O-ring, a catch plate, a key, a washer, a split pin, a wooden crusher, a crusher plate, a tracing pad, a motor drive, a sheet metal spacer, a delivery pipe and a main base platform. The raw material is pressed through the wooden crushes and reshaped into a broom through the nitrile O-ring wrapped over the wooden wheel. The wooden wheel rotates through the main shaft which further connected to a single phase AC motor. FIG. 1

No. of Pages : 46 No. of Claims : 6

(12) PATENT APPLICATION PUBLICATION
(21) Application No.4015/CHENP/2014 A
(19) INDIA
(22) Date of filing of Application :28/05/2014
(43) Publication Date : 23/10/2015

(54) Title of the invention : RADIO BASE STATION APPARATUS USER TERMINAL WIRELESS COMMUNICATION SYSTEM AND WIRELESS COMMUNICATION METHOD

(51) International classification :H04J99/00,H04J11/00,H04W28/06
(31) Priority Document No :2011244006
(32) Priority Date :07/11/2011
(33) Name of priority country :Japan
(86) International Application No :PCT/JP2012/078795
Filing Date :07/11/2012
(87) International Publication No :WO 2013/069663
(61) Patent of Addition to Application Number :NA
Filing Date :NA
(62) Divisional to Application Number :NA
Filing Date :NA

(71)**Name of Applicant :**
1)NTT DOCOMO INC.
Address of Applicant :11 1 Nagatacho 2 chome Chiyoda ku Tokyo 1006150 Japan
(72)**Name of Inventor :**
1)TAKEDA Kazuaki
2)KISHIYAMA Yoshihisa
3)NAGATA Satoshi

(57) Abstract :
The objective of the invention is to appropriately perform in a structure wherein a downstream control channel has been extended the allocation of downstream control signals for radio resources used for the extended control channel. There are included: an allocation unit for allocating downstream control signals to both a first control area extending from a front end of a frame that is a transmission time interval to a predetermined OFDM symbol and a plurality of second control areas that have been frequency division multiplexed with data areas in an area following the predetermined OFDM symbol and that have been structured in a predetermined resource block size or only to the plurality of second control areas; and a transmission unit for transmitting the downstream control signals to user terminals. The allocation unit arranges that a plurality of extension control channel elements each of which is a unit of allocation of downstream control information be included in each of the plurality of second control areas. Further the allocation unit divides the extension control channel elements and then performs a dispersion mapping in such a manner that the divided extension control channel elements are dispersed in each of the plurality of second control areas having different frequency bands.

No. of Pages : 88 No. of Claims : 10

(12) PATENT APPLICATION PUBLICATION
(21) Application No.4016/CHENP/2014 A
(19) INDIA
(22) Date of filing of Application :28/05/2014
(43) Publication Date : 23/10/2015

(54) Title of the invention : TURBOMACHINE HAVING ONE OR MORE BLADE WHEELS WITH POSITIVELY DRIVEN MOVING BLADES.

(51) International classification :F03B17/06,F03D3/06
(31) Priority Document No :BZ2011A000058
(32) Priority Date :21/11/2011
(33) Name of priority country :Italy
(86) International Application No :PCT/EP2012/073130
Filing Date :20/11/2012
(87) International Publication No :WO 2013/076094
(61) Patent of Addition to Application Number :NA
Filing Date :NA
(62) Divisional to Application Number :NA
Filing Date :NA

(71)**Name of Applicant :**
1)BARONI Carlo
Address of Applicant :via del Bergamino 20/03 I 34139 Trieste Italy
(72)**Name of Inventor :**
1)PASETTO Piergiorgio

(57) Abstract :
A turbomachine is described comprising a housing (2) at least two blade wheels (3 4) rotatably accommodated by the housing (2) at least two rotatably arranged blades (6) which are evenly distributed along a circle of the at least two blade wheels (3 4) and mounted with an axle parallel to the axis of the corresponding blade wheel. According to the invention each blade axle (6) is connected to an adjusting element (22 23) which can be displaced relative to the shaft of the second blade wheel (4) via a four bar link which lies in a plane perpendicular to the blade axle and consists mainly of a square arm that is fixed to the axle of the blades wherein a square arm is articulated to the bottom of the blade wheel whereas the other end is connected to the end of the first square arm via a connecting axle wherein the arm articulated to the bottom of the blade wheel is articulated to a sliding block in a positively driven manner said sliding block being displaceable in a guide which is fixed to the adjusting element wherein the sliding block guide system combined with the rotation of the blade wheel permits a control of the corresponding blade with a harmonic profile according to a curvature which can be altered similar to a sinusoidal line with an axis that coincides with the pitch circle of the blade wheel.

No. of Pages : 32 No. of Claims : 8

(12) PATENT APPLICATION PUBLICATION
(21) Application No.3954/CHENP/2014 A
(19) INDIA
(22) Date of filing of Application :26/05/2014
(43) Publication Date : 23/10/2015

(54) Title of the invention : WIRELESS TAG DEVICE WIRELESS COMMUNICATION SYSTEM AND RESEND CONTROL METHOD

(51) International classification	:G06K19/07,G06K17/00,H04B1/59
(31) Priority Document No	:2011236670
(32) Priority Date	:28/10/2011
(33) Name of priority country	:Japan
(86) International Application No	:PCT/JP2012/006831
Filing Date	:25/10/2012
(87) International Publication No	:WO 2013/061589
(61) Patent of Addition to Application Number	:NA
Filing Date	:NA
(62) Divisional to Application Number	:NA
Filing Date	:NA

(71)**Name of Applicant :**
1)PANASONIC CORPORATION
Address of Applicant :1006 Oaza Kadoma Kadoma shi Osaka 5718501 Japan
(72)**Name of Inventor :**
1)TAKIGUCHI Takeshi

(57) Abstract :
A wireless tag device (2) receives a response request signal from a wireless reader device (3) and measures the receiving strength thereof. In response to the response request signal the wireless tag device (2) determines whether a communication with the wireless reader device (3) was successful. The wireless tag device (2) carries out a movement determination on the basis of the increase or decrease of the receiving strength compares the receiving strength with a threshold and carries out a distance determination and carries out an area determination on the basis of the results of the movement determination and the distance determination. When the communication with the wireless reader device (3) fails the wireless tag device (2) controls on the basis of the result of the area determination resend timing according to priorities which are determined for each area (long distance separation: maximum; near distance separation: high; near distance approach: medium; long distance approach: low). It is thus possible when communication with the wireless reader device has failed to set appropriate priorities according to the number of future resend opportunities and to appropriately control resending on the basis of the priorities.

No. of Pages : 59 No. of Claims : 6

(12) PATENT APPLICATION PUBLICATION
(21) Application No.3955/CHENP/2014 A
(19) INDIA
(22) Date of filing of Application :26/05/2014
(43) Publication Date : 23/10/2015

(54) Title of the invention : CARBONITRIDING METHOD HAVING A FINAL NITRIDATION STEP DURING TEMPERATURE DECREASE

(51) International classification :C23C8/02,C23C8/22,C23C8/26
(31) Priority Document No :1159878
(32) Priority Date :31/10/2011
(33) Name of priority country :France
(86) International Application No :PCT/EP2012/069890
Filing Date :08/10/2012
(87) International Publication No :WO 2013/064337
(61) Patent of Addition to Application Number :NA
Filing Date :NA
(62) Divisional to Application Number :NA
Filing Date :NA

(71)**Name of Applicant :**
1)ECM TECHNOLOGIES
Address of Applicant :46 Rue Jean Vaujany Technisud F 38029 Grenoble Cedex France
(72)**Name of Inventor :**
1)LAPIERRE Philippe
2)LARDINOIS Jr´me
3)GIRAUD Yves
4)RALLO Alfred

(57) Abstract :
The invention relates to a method for the carbonitriding of steel parts in particular parts used in the manufacture of automobiles comprising: a heating step that includes a simple heating phase (M) followed by an initial nitridation phase (Ni) from a temperature between 700°C and 750° C to a temperature between 860° C and 1000° C and is carried out using a reduced temperature gradient compared to the simple heating phase; and alternate cementing (C1 Cn) and nitridation (N1 Nn) steps at constant temperature; wherein the final nitridation step is accompanied with a decrease in temperature immediately before quenching (T).

No. of Pages : 12 No. of Claims : 10

(12) PATENT APPLICATION PUBLICATION
(19) INDIA
(22) Date of filing of Application :30/05/2014
(21) Application No.4053/CHENP/2014 A
(43) Publication Date : 23/10/2015

(54) Title of the invention : OVEN FOR MANUFACTURING A MINERAL WOOL PRODUCT

(51) International classification :F27B9/10,F27B9/24,B29C35/06
(31) Priority Document No :1162034
(32) Priority Date :20/12/2011
(33) Name of priority country :France
(86) International Application No :PCT/FR2012/053004
Filing Date :19/12/2012
(87) International Publication No :WO 2013/093348
(61) Patent of Addition to Application Number :NA
Filing Date :NA
(62) Divisional to Application Number :NA
Filing Date :NA

(71)**Name of Applicant :**
1)SAINT GOBAIN ISOVER
Address of Applicant :18 avenue dAlsace F 92400 Courbevoie France
(72)**Name of Inventor :**
1)CELLE Pierre
2)BAUDOUIN Bernard

(57) Abstract :
Oven (12) for curing a thermosetting binder present in a pad (11) of mineral fibres comprising a series of vessels (21 27) successively traversed by said fibre pad said pad being compressed and transported through said vessels by gas permeable upper (13) and lower (14) conveyors each vessel having in the pad s direction of motion (50) a length L and further comprising means of introducing (28) a hot air flow arranged either below or above said fibre pad and means of discharging (29) air after said pad has passed through respectively arranged either above or below the side opposite said pad in such a way that the binder is gradually brought to a temperature greater than its setting temperature said oven being characterised in that it comprises at least one vessel (30) wherein said means of introducing (28) hot air comprise air intakes that partly empty into openings (31a 31b) built into a first lateral side (33) of said vessel and partly empty into openings built into the opposite lateral side (34) of said vessel.

No. of Pages : 37 No. of Claims : 14

(12) PATENT APPLICATION PUBLICATION
(21) Application No.4054/CHENP/2014 A
(19) INDIA
(22) Date of filing of Application :30/05/2014
(43) Publication Date : 23/10/2015

(54) Title of the invention : CONTROL METHOD AND CONTROL SYSTEM BASED ON SINGLE POWER CACHING MECHANISM

(51) International classification :G07D11/00,B65H5/06,F16H7/02
(31) Priority Document No :201210168762.3
(32) Priority Date :25/05/2012
(33) Name of priority country :China
(86) International Application No :PCT/CN2013/073168
Filing Date :26/03/2013
(87) International Publication No :WO 2013/174176
(61) Patent of Addition to Application Number :NA
Filing Date :NA
(62) Divisional to Application Number :NA
Filing Date :NA

(71)**Name of Applicant :**
1)GRG BANKING EQUIPMENT CO. LTD.
Address of Applicant :9 Kelin Road Science City Luogang District Guangzhou Guangdong 510663 China
(72)**Name of Inventor :**
1)YIN Fazhi
2)LIANG Guoyou
3)HA Yanwen

(57) Abstract :
A control method based on a single power caching mechanism. The single power caching mechanism comprises an active coiling block (11) a driving motor (10) passive coiling blocks (4 8) and a tape coiling (2). The active coiling block (11) is disposed on the driving motor (10). The active roiling block (11) and the passive coiling blocks (4 8) are connected through the tape coiling (2). The control method comprises the following steps: 1) when the driving motor (10) needs to be shut down detecting a rotational inertia I of the active coiling block (11) a semidiameter R of the active coiling block (11) a semidiameter r of the passive coiling blocks (4 8) and a rotational inertia I2 of the passive coiling blocks (4 8); and 2) controlling a breaking torque of the driving motor to be =I—r—M/(I—R) M being a torsional moment of the passive coiling blocks. Also disclosed is a control system based on a single power caching mechanism. When the breaking torque M1 of the driving motor is controlled to be smaller than or equal to I—r—M/(I—R) it can be ensured that the active coiling block and the passive coiling blocks remain a same operation state in a process of reducing the speed until they are static completely rotational distances are equal and the tape coiling is straightened.

No. of Pages : 16 No. of Claims : 4

(12) PATENT APPLICATION PUBLICATION
(21) Application No.314/CHE/2014 A
(19) INDIA
(22) Date of filing of Application :25/01/2014
(43) Publication Date : 23/10/2015

(54) Title of the invention : APPARATUS TO SCRAPE COCONUT

(51) International classification :A47J
(31) Priority Document No :NA
(32) Priority Date :NA
(33) Name of priority country :NA
(86) International Application No :NA
Filing Date :NA
(87) International Publication No : NA
(61) Patent of Addition to Application Number :NA
Filing Date :NA
(62) Divisional to Application Number :NA
Filing Date :NA

(71)**Name of Applicant :**
1)MATTATHIL WILSON VARGHESE
Address of Applicant :E115, Brigade Gardenia, J P Nagar 8th Phase, Bangalore 560078, Karnataka, India Karnataka India
(72)**Name of Inventor :**
1)MATTATHIL WILSON VARGHESE

(57) Abstract :
The present disclosure provides an apparatus to scrape to extract coconut meat from a half coconut with minimal human intervention and convenient to use. The apparatus to scrape coconut generally includes 1. Variable-Width-Scraper-Apparatus which considers and accommodates the variability in width of a half coconut and scrapes it accordingly, 2. Vertical-Movement-Control-Apparatus which considers and accommodates the variability in length of a half coconut and moves the Variable-Width-Scraper-Apparatus length-wise through the half coconut to scrape the half coconut fully, 3 Variable-Opening-Entry-Mechanism which considers and accommodates the variability in the diameter of the cut face opening of half coconut and guides the entry of the Variable-Width-Scraper-Apparatus into the half coconut optimally, 3.1. Scraped-coconut-meat-expeller which expels the scraped coconut meat from the scraping area so that it can be collected efficiently. 4. Coconut-holding-mechanism which optimally holds the half coconut to be scraped and 5. Optimal-Operations-Mechanism which controls the starting, scraping and stopping process of the overall apparatus to scrape coconut. Refer FIG. 6a

No. of Pages : 229 No. of Claims : 95

(12) PATENT APPLICATION PUBLICATION
(19) INDIA
(22) Date of filing of Application :27/05/2014
(21) Application No.3965/CHENP/2014 A
(43) Publication Date : 23/10/2015

(54) Title of the invention : MODULATING FUNCTION OF NEURAL STRUCTURES NEAR THE EAR

(51) International classification :A61N1/40
(31) Priority Document No :61/630150
(32) Priority Date :06/12/2011
(33) Name of priority country :U.S.A.
(86) International Application No :PCT/US2012/067801
Filing Date :04/12/2012
(87) International Publication No :WO 2013/085924
(61) Patent of Addition to Application Number :NA
Filing Date :NA
(62) Divisional to Application Number :NA
Filing Date :NA

(71)**Name of Applicant :**
1)NERVIVE INC.
Address of Applicant :88 Tarry Lane Orinda CA 94563 U.S.A.
(72)**Name of Inventor :**
1)BORSODY Mark Klingler

(57) Abstract :
Stimulation of the facial nerve system (e.g. electrically electromagnetically etc.) in ischemic stroke patients will cause dilation of occluded arteries and dilation of surrounding arteries allowing for blood flow to circumvent the obstruction and reach previously deprived tissue. The device approaches the facial nerve and its branches in the vicinity of the ear. In use the device can be inserted into the ear canal and/or placed in proximity to the ear in order to stimulate the facial nerve system non invasively (e.g. using an electromagnetic field). The device can be used in the emergency treatment of acute stroke or chronically variations for long term maintenance of blood flow to the brain and stroke prevention. Additional embodiments of the device may be adapted for use on different regions of the body.

No. of Pages : 57 No. of Claims : 50

(12) PATENT APPLICATION PUBLICATION
(21) Application No.3966/CHENP/2014 A
(19) INDIA
(22) Date of filing of Application :27/05/2014
(43) Publication Date : 23/10/2015

(54) Title of the invention : METHOD FOR PRODUCING INSULATED CASING PIPES IN A CONTINUOUS PRODUCTION PROCESS

(51) International classification :F16L59/02
(31) Priority Document No :11190970.1
(32) Priority Date :28/11/2011
(33) Name of priority country :EPO
(86) International Application No :PCT/EP2012/073658
Filing Date :27/11/2012
(87) International Publication No :WO 2013/079455
(61) Patent of Addition to Application Number :NA
Filing Date :NA
(62) Divisional to Application Number :NA
Filing Date :NA

(71)**Name of Applicant :**
1)BASF SE
Address of Applicant :67056 Ludwigshafen Germany
(72)**Name of Inventor :**
1)ELLERSIEK Carsten

(57) Abstract :
The invention relates to a continuous method for producing insulated pipes comprising a medium pipe (3) a casing pipe a layer of at least one polyurethane between the medium pipe and the casing pipe and a film tube (5) between the at least one polyurethane and the casing pipe comprising at least the steps of (A) providing a medium pipe and a film tube which is continuously formed from a film in a jaw conveyor wherein the medium pipe is arranged within the film tube in such a way that an annular gap is formed between the medium pipe and the film tube (B) injecting a polyurethane system comprising at least one isocyanate component (a) and at least one polyol mixture (b) into the annular gap (C) foaming and curing the polyurethane system and (D) applying a layer of at least one thermoplastic plastic to the film tube by means of extrusion in order to form the casing pipe wherein the injection as per step (B) is performed by means of a multi nozzle bent according to the radius of the annular gap.

No. of Pages : 19 No. of Claims : 8

(12) PATENT APPLICATION PUBLICATION
(21) Application No.4066/CHENP/2014 A
(19) INDIA
(22) Date of filing of Application :30/05/2014
(43) Publication Date : 23/10/2015

(54) Title of the invention : SUBMERGED ARC WELDING METHOD FOR STEEL SHEETS

(51) International classification :B23K9/18
(31) Priority Document No :2011260281
(32) Priority Date :29/11/2011
(33) Name of priority country :Japan
(86) International Application No :PCT/JP2012/007611
Filing Date :28/11/2012
(87) International Publication No :WO 2013/080524
(61) Patent of Addition to Application Number :NA
Filing Date :NA
(62) Divisional to Application Number :NA
Filing Date :NA

(71)**Name of Applicant :**
1)JFE STEEL CORPORATION
Address of Applicant :2 3 Uchisaiwai cho 2 chome Chiyoda ku Tokyo 1000011 Japan
(72)**Name of Inventor :**
1)ISHIGAMI Atsushi
2)HAYAKAWA Naoya
3)YANO Koji

(57) Abstract :
Provided is a submerged arc welding method enables: welds with high toughness to be provided with low input heat; deep penetration; and a wide bead width to be sufficiently obtained in the welding of thick materials such that the welding speed is not more than 3 m/minute. The wire diameter of a first electrode at the head in the welding direction is established at 3.9 to 4.1 mm. Two electrodes are positioned on both sides of a weld line at the tail end in the welding direction. Wire tip positions of the two electrodes on the surface of a steel sheet are positioned on the same line which is perpendicular to the weld line and the distance (W) (mm) between the wire tip positions and the weld line is established at 5 to 20 mm.

No. of Pages : 25 No. of Claims : 3

(12) PATENT APPLICATION PUBLICATION
(21) Application No.4010/CHENP/2014 A
(19) INDIA
(22) Date of filing of Application :28/05/2014
(43) Publication Date : 23/10/2015

(54) Title of the invention : WOODY ODORANTS

(51) International classification :C07C49/553,A61Q13/00
(31) Priority Document No :11194756.0
(32) Priority Date :21/12/2011
(33) Name of priority country :EPO
(86) International Application No :PCT/EP2012/076257
Filing Date :20/12/2012
(87) International Publication No :WO 2013/092781
(61) Patent of Addition to Application Number :NA
Filing Date :NA
(62) Divisional to Application Number :NA
Filing Date :NA

(71)**Name of Applicant :**
1)FIRMENICH SA
Address of Applicant :1 route des Jeunes P. O. Box 239 CH 1211 Geneva 8 Switzerland
(72)**Name of Inventor :**
1)BIRKBECK Anthony A.

(57) Abstract :
1 The present invention concerns compounds of formula (I) in the form of any one of its stereoisomers or a mixture thereof and wherein one dotted line represents a carbon carbon single or double bond and the others a carbon carbon single bond; each R independently from each other represents a hydrogen atom or a methyl or ethyl group provided that at least one of said R groups represents a methyl or ethyl group; and Rrepresents a methyl or ethyl group; and their use in perfumery to impart odor notes of the woody type having cedar ambery patchouli and/or rooty aspect.

No. of Pages : 29 No. of Claims : 10

(12) PATENT APPLICATION PUBLICATION
(21) Application No.4011/CHENP/2014 A
(19) INDIA
(22) Date of filing of Application :28/05/2014
(43) Publication Date : 23/10/2015

(54) Title of the invention : ELECTRICAL MACHINES AND ELECTRICAL MACHINE ROTORS

(51) International classification :H02K1/27,H02K1/28,F16C3/02
(31) Priority Document No :61/565066
(32) Priority Date :30/11/2011
(33) Name of priority country :U.S.A.
(86) International Application No :PCT/US2012/054183
Filing Date :07/09/2012
(87) International Publication No :WO 2013/081703
(61) Patent of Addition to Application Number :NA
Filing Date :NA
(62) Divisional to Application Number :NA
Filing Date :NA

(71)**Name of Applicant :**
1)ABB RESEARCH LTD.
Address of Applicant :Affolternstrasse 44 CH 8050 Zurich Switzerland
(72)**Name of Inventor :**
1)TREMELLING Darren D.

(57) Abstract :
Electrical machine rotors and electrical machines are disclosed. The electrical machine rotors may include a shaft a pair of permanent magnets arranged to form a magnetic pole on the rotor a pole iron and a pair of opposed inter pole irons. The pole iron may retain the pair of magnets against the inter pole irons and relative to the shaft. The electrical machine rotors may be assembled into electrical machines that include the rotor and a stator that includes a stator iron and at least one coil. In some examples the shaft may be hollow nonmagnetic fiber reinforced and/or fabricated at least partially from a composite material.

No. of Pages : 19 No. of Claims : 29

(12) PATENT APPLICATION PUBLICATION
(19) INDIA
(22) Date of filing of Application :28/05/2014
(21) Application No.4012/CHENP/2014 A
(43) Publication Date : 23/10/2015

(54) Title of the invention : SENSOR ARRANGEMENT FOR A PACKAGING OF A MEDICAMENT

(51) International classification :G01N27/04,G01N27/12,G01K7/01
(31) Priority Document No :11195529.0
(32) Priority Date :23/12/2011
(33) Name of priority country :EPO
(86) International Application No :PCT/EP2012/076318
Filing Date :20/12/2012
(87) International Publication No :WO 2013/092823
(61) Patent of Addition to Application Number :NA
Filing Date :NA
(62) Divisional to Application Number :NA
Filing Date :NA

(71)**Name of Applicant :**
1)SANOFI AVENTIS DEUTSCHLAND GMBH
Address of Applicant :Br¼ningstrae 50 65929 Frankfurt Germany
(72)**Name of Inventor :**
1)KIETZMANN Hardy
2)GROESCHKE Jasmin
3)JUHNKE Hanno
4)SPENGLER Jan Peter

(57) Abstract :
The present invention relates to a sensor arrangement to monitor at least one ambient parameter (24) the sensor arrangement comprising: a first layer (12) exhibiting a first electrical conductivity and at least a second layer (14) exhibiting a second electrical conductivity different than the first electrical conductivity and being at least partially in direct contact with the first layer (12) wherein the first and the second layer (12 14) in an initial configuration comprise different concentrations of a diffusible component (22) having an impact on the conductivity of the first and/or the second layer (12 14).

No. of Pages : 34 No. of Claims : 15

(12) PATENT APPLICATION PUBLICATION
(21) Application No.4013/CHENP/2014 A
(19) INDIA
(22) Date of filing of Application :28/05/2014
(43) Publication Date : 23/10/2015

(54) Title of the invention : NEW ALDEHYDE AS PERFUMING INGREDIENT

(51) International classification :C11B9/00
(31) Priority Document No :11194414.6
(32) Priority Date :20/12/2011
(33) Name of priority country :EPO
(86) International Application No :PCT/EP2012/074703
Filing Date :06/12/2012
(87) International Publication No :WO 2013/092240
(61) Patent of Addition to Application Number :NA
Filing Date :NA
(62) Divisional to Application Number :NA
Filing Date :NA

(71)**Name of Applicant :**
1)FIRMENICH SA
Address of Applicant :1 route des Jeunes P. O. Box 239 CH 1211 Geneva 8 Switzerland
(72)**Name of Inventor :**
1)KNOPFF Oliver

(57) Abstract :
The present invention relates to the use as perfuming ingredient of 4 methyl 8 methylene 4 9 decadienal in particular to impart aldehydic notes evoking cardamon and/or floral notes evoking the lily of the valley.

No. of Pages : 14 No. of Claims : 9

(12) PATENT APPLICATION PUBLICATION
(19) INDIA
(22) Date of filing of Application :28/05/2014
(21) Application No.4008/CHENP/2014 A
(43) Publication Date : 23/10/2015

(54) Title of the invention : NOVEL COMPOSITION

(51) International classification :A61K
(31) Priority Document No :1121300.6
(32) Priority Date :12/12/2011
(33) Name of priority country :U.K.
(86) International Application No :PCT/EP2012/075082
Filing Date :11/12/2012
(87) International Publication No :WO 2013/087623
(61) Patent of Addition to Application Number :NA
Filing Date :NA
(62) Divisional to Application Number :NA
Filing Date :NA

(71)**Name of Applicant :**
1)GLAXO GROUP LIMITED
Address of Applicant :980 Great West Road Brentford Middlesex TW8 9GS U.K.
(72)**Name of Inventor :**
1)EDWARDS Mark Ieuan
2)KING Simon
3)PATEL Nisha

(57) Abstract :
Oral care compositions comprising one or more active agents and hydroxypropyl cellulose and that are liquid at or below room temperature and which form a two phase cloudy system at body temperature. In certain embodiments the active agent is a mineralizing agent an anti caries agent an anti inflammatory agent an antibacterial agent an antifungal agent an anti malodour agent or a mixture thereof.

No. of Pages : 20 No. of Claims : 22

(12) PATENT APPLICATION PUBLICATION
(21) Application No.4009/CHENP/2014 A
(19) INDIA
(22) Date of filing of Application :28/05/2014
(43) Publication Date : 23/10/2015

(54) Title of the invention : APOAEQUORIN FOR REDUCING NEURONAL INJURY DUE TO ISCHEMIA

(51) International classification :A61K38/17,A61P25/28
(31) Priority Document No :61/559816
(32) Priority Date :15/11/2011
(33) Name of priority country :U.S.A.
(86) International Application No :PCT/US2012/065291
Filing Date :15/11/2012
(87) International Publication No :WO 2013/074798
(61) Patent of Addition to Application Number :NA
Filing Date :NA
(62) Divisional to Application Number :NA
Filing Date :NA

(71)**Name of Applicant :**
1)QUINCY BIOSCIENCE LLC
Address of Applicant :301 S. Westfield Rd. Suite 200 Madison WI 53717 U.S.A.
(72)**Name of Inventor :**
1)UNDERWOOD Mark Y.
2)MOYER James R.

(57) Abstract :
The present invention provides apoaequorin based compositions and methods for preconditioning neurons in a subject to reduce neuronal injury due to brain ischemia. Methods include the step of administering apoaequorin to neurons in a subject wherein the apoaequorin initiates a change in cytokine expression levels resulting in a reduction of neuronal injury due to brain ischemia as compared to neurons not administered the apoaequorin. Various formulations including injectable dosages are described.

No. of Pages : 34 No. of Claims : 11

(12) PATENT APPLICATION PUBLICATION
(21) Application No.4076/CHENP/2014 A
(19) INDIA
(22) Date of filing of Application :30/05/2014
(43) Publication Date : 23/10/2015

(54) Title of the invention : A PROKARYOTE BASED CELL FREE SYSTEM FOR THE SYNTHESIS OF GLYCOPROTEINS

(51) International classification :C12P21/06,C12P19/18,C12N9/10
(31) Priority Document No :61/555854
(32) Priority Date :04/11/2011
(33) Name of priority country :U.S.A.
(86) International Application No :PCT/US2012/063590
Filing Date :05/11/2012
(87) International Publication No :WO 2013/067523
(61) Patent of Addition to Application Number :NA
Filing Date :NA
(62) Divisional to Application Number :NA
Filing Date :NA

(71)**Name of Applicant :**
1)CORNELL UNIVERSITY
Address of Applicant :395 Pine Tree Road Suite 310 CCTEC Ithaca NY 14850 U.S.A.
(72)**Name of Inventor :**
1)DELISA Matthew

(57) Abstract :
The present invention is directed to a cell free system for producing a glycosylated protein. This system comprises an isolated oligosaccharyltransferase capable of transferring a glycan from a lipid carrier molecule to a glycoprotein target one or more isolated glycans where each glycan is linked to a lipid carrier molecule and a glycoprotein target comprising one or more glycan acceptor amino acid residues or a nucleic acid molecule encoding said glycoprotein target. The present invention further relates to kits and methods for producing a glycosylated protein in this cell free system.

No. of Pages : 211 No. of Claims : 34

(12) PATENT APPLICATION PUBLICATION
(21) Application No.4070/CHENP/2014 A
(19) INDIA
(22) Date of filing of Application :30/05/2014
(43) Publication Date : 23/10/2015

(54) Title of the invention : VEHICLE OPERATOR DISPLAY AND ASSISTIVE MECHANISMS

(51) International classification :B60T8/17,G01C23/00
(31) Priority Document No :61/587802
(32) Priority Date :18/01/2012
(33) Name of priority country :U.S.A.
(86) International Application No :PCT/US2013/020710
Filing Date :09/01/2013
(87) International Publication No :WO 2013/109434
(61) Patent of Addition to Application Number :NA
Filing Date :NA
(62) Divisional to Application Number :NA
Filing Date :NA

(71)**Name of Applicant :**
1)ENGINEERED ARRESTING SYSTEMS CORPORATION
Address of Applicant :2550 Market Street Aston PA 19014 U.S.A.
(72)**Name of Inventor :**
1)GADZINSKI John

(57) Abstract :
Detailed are assistive mechanisms for vehicle operators designed to reduce risks associated with degraded landing and other situations. Some mechanisms may include a display with a visual indicator located within the peripheral field of view of an operator. Aural alerts may also be employed. Information suggesting degradation of for example ground deceleration performance may alert the operator to perform unusual or abnormal actions to mitigate hazards produced by the performance degradation.

No. of Pages : 20 No. of Claims : 16

(12) PATENT APPLICATION PUBLICATION
(19) INDIA
(22) Date of filing of Application :30/05/2014
(21) Application No.4071/CHENP/2014 A
(43) Publication Date : 23/10/2015

(54) Title of the invention : CLOSTRIDIUM DIFFICILE TOXIN BASED VACCINE

(51) International classification :A61K39/08,C07K14/33
(31) Priority Document No :1121149.7
(32) Priority Date :08/12/2011
(33) Name of priority country :U.K.
(86) International Application No :PCT/IB2012/002955
Filing Date :07/12/2012
(87) International Publication No :WO 2013/084071
(61) Patent of Addition to Application Number :NA
Filing Date :NA
(62) Divisional to Application Number :NA
Filing Date :NA

(71)**Name of Applicant :**
1)NOVARTIS AG
Address of Applicant :Lichtstrasse 35 4056 Basel Switzerland
(72)**Name of Inventor :**
1)SCARSELLI Maria
2)PIZZA Mariagrazia
3)LEUZZI Rosanna
4)ARICO Maria
5)MARTINELLI Manuele
6)DOUCE Gillian

(57) Abstract :
The present invention relates to recombinant fragments of C. difficile TcdA and TcdB that may be used in the development of vaccines against C. difficile associated disease. More particularly it relates to combinations comprising a ToxB GT antigen and a TcdA antigen or a ToxA GT antigen and a TcdB antigen.

No. of Pages : 167 No. of Claims : 23

(12) PATENT APPLICATION PUBLICATION
(19) INDIA
(22) Date of filing of Application :02/06/2014
(21) Application No.2690/CHE/2014 A
(43) Publication Date : 23/10/2015

(54) Title of the invention : PRESAGE DETECTION AND RECOVERY SUPPORT SYSTEMFOR PLANT FAILURE

(51) International classification	:C02F1/00
(31) Priority Document No	:JP2013-119397
(32) Priority Date	:06/06/2013
(33) Name of priority country	:Japan
(86) International Application No	:NA
Filing Date	:NA
(87) International Publication No	: NA
(61) Patent of Addition to Application Number	:NA
Filing Date	:NA
(62) Divisional to Application Number	:NA
Filing Date	:NA

(71)**Name of Applicant :**
1)Hitachi, Ltd.
Address of Applicant :6-6, Marunouchi 1-chome, Chiyoda-ku, Tokyo 100-8280 Japan Japan
(72)**Name of Inventor :**
1)Yukinori KATAGIRI
2)Yoshinobu MIYAKE
3)Kouji KAGEYAMA
4)Takahiro TACHI

(57) Abstract :
In order to detect failures or abnormalities of devices earlier in a seawater desalination plant and to determine their causes based on the detected content so as to present appropriate measures to an operator, a presage detection and recovery support system for plant failure includes a unit that detects failures of devices which constitute the seawater desalination plant, a unit that detects abnormality of water quality of fluid (seawater, desalinated water) flowing through insides of the devices, and a unit that displays for the operator based on respective detected results, a plurality of measure methods for recovering the seawater desalination plant. Most Illustrative Drawing: Fig. 1

No. of Pages : 34 No. of Claims : 4

(12) PATENT APPLICATION PUBLICATION
(21) Application No.4030/CHENP/2014 A
(19) INDIA
(22) Date of filing of Application :29/05/2014
(43) Publication Date : 23/10/2015

(54) Title of the invention : AN AUXILIARY CONTACT BLOCK

(51) International classification :H01H50/54,H02B1/26,H05K5/00
(31) Priority Document No :NA
(32) Priority Date :NA
(33) Name of priority country :NA
(86) International Application No :PCT/EP2011/069322
Filing Date :03/11/2011
(87) International Publication No :WO 2013/064186
(61) Patent of Addition to Application Number :NA
Filing Date :NA
(62) Divisional to Application Number :NA
Filing Date :NA

(71)**Name of Applicant :**
1)ABB AB
Address of Applicant :Kopparbergsvgen 2 S 721 83 Vsters Sweden
(72)**Name of Inventor :**
1)ERIKSSON Lars

(57) Abstract :
The present invention relates to an auxiliary contact block (1) for a low voltage contactor (100) wherein the contactor (100) has a side wall (150 160) including a first (110) and a second (140) recesses. The auxiliary contact block comprises a first (11) and a second housing (12) connected in parallel to each other an actuation nipple (20) extending out from the second housing (12) and a connecting mechanism for connecting the auxiliary contact block (1) to the contactor (100). The connecting mechanism comprises a snap fit element (40) for locking the auxiliary contact block (1) to the contactor (100) when it is at a latched position and being adapted to engage in the second recess (140) provided on the side wall of the contactor and a releasing member (30) for unlocking the snap fit element (40) to an unlatched position and comprising a releasing bar (32) arranged for receiving a pressing force. The releasing member (30) is arranged on the second housing (12) and further comprises a wedge element (34) connected to the pressing element. An inlet (60) is provided on the second housing (12) for receiving the wedge element (34). Furthermore the snap fit element (40) is arranged on the first housing (11) and protrudes out from the inlet (60) and the wedge element (34) is arranged upon pressing the releasing bar (32) the latched snap fit element (40) is pushed aside to the unlatched position so that the auxiliary contact block (1) is unlocked from the contactor (100).

No. of Pages : 15 No. of Claims : 4

(12) PATENT APPLICATION PUBLICATION
(19) INDIA
(22) Date of filing of Application :29/05/2014
(21) Application No.4032/CHENP/2014 A
(43) Publication Date : 23/10/2015

(54) Title of the invention : OXIDIZING SYSTEM CONTAINING HYDROGEN PEROXIDE ACID/PERACID STABILIZER AMINE OXIDE AND ESSENTIAL OIL COMPOSITION COMPRISING SUCH A SYSTEM AND USE IN THE FIELD OF DISINFECTION

(51) International classification	:A01N37/16,A01N59/00,A01N33/24
(31) Priority Document No	:1160989
(32) Priority Date	:30/11/2011
(33) Name of priority country	:France
(86) International Application No	:PCT/EP2012/072408
Filing Date	:12/11/2012
(87) International Publication No	:WO 2013/079308
(61) Patent of Addition to Application Number	:NA
Filing Date	:NA
(62) Divisional to Application Number	:NA
Filing Date	:NA

(71)**Name of Applicant :**
1)SILVER INTERVEST INC.
Address of Applicant :325 Waterfront Drive Omar Hodge Bld 2nd Floor Wickhams Cay Road Town Tortola Iles Vierges Britanniques VIRGIN ISLANDS
(72)**Name of Inventor :**
1)GUIOT Pierre

(57) Abstract :
The present invention relates to as a novel industrial product an aqueous system usable in the field of disinfection said system which comprises hydrogen peroxide acids an amine N oxide substance and an essential oil component being characterized in that: (1) it is homogeneous and consists of a single phase and (2) said essential oil component is chosen from the collection consisting of (a) water soluble essential oils (b) terpinen 4 ol and (c) mixtures thereof. The invention also relates to a process for preparing such a system.

No. of Pages : 33 No. of Claims : 13

(12) PATENT APPLICATION PUBLICATION
(19) INDIA
(22) Date of filing of Application :02/06/2014
(21) Application No.2693/CHE/2014 A
(43) Publication Date : 23/10/2015

(54) Title of the invention : METHOD AND DEVICE FOR DESULPHURIZING AN EXHAUST-GAS RECIRCULATION FLOW

(51) International classification :F02M25/00
(31) Priority Document No :10 2013 009 578.6
(32) Priority Date :07/06/2013
(33) Name of priority country :Germany
(86) International Application No :NA
Filing Date :NA
(87) International Publication No : NA
(61) Patent of Addition to Application Number :NA
Filing Date :NA
(62) Divisional to Application Number :NA
Filing Date :NA

(71)**Name of Applicant :**
1)MAN Truck & Bus AG
Address of Applicant :of Dachauer Str. 667, 80995 M¼nchen, Germany Germany
(72)**Name of Inventor :**
1)D–RING, Andreas

(57) Abstract :
The invention proposes a method and a device for desulphurizing an exhaustgas recirculation flow of an internal combustion engine, said exhaustgas 15 recirculation flow being supplied to the internal combustion engine (1) on the freshair side (8) thereof, wherein ammonia is used for the desulphurization in the exhaustgas recirculation flow (7), and wherein at least one partial exhaust-gas flow (7, 17) is branched off from 20 the exhaust-gas flow (2) of the internal combustion engine (1) . It is proposed according to the invention that a partial exhaustgas flow (7) which is branched off from the exhaust-gas flow (2) of the internal combustion engine (1) has supplied thereto at least one reactant 25 (12) that splits to form ammonia, and the thus laden partial exhaustgas flow (7) is supplied partially, as an exhaust-gas recirculation flow (7), to the freshair side (8) and partially, as an aftertreatment partial flow (9), to an exhaustgas aftertreatment system. The flow SO rate of the exhaustgas recirculation flow supplied to the freshair side (8) and the flow rate of the aftertreatment partial flow (9) supplied to the exhaust gas aftertreatment system are predefined and/or varied by means of a control and/or regulating device as a function SE of at least one operating parameter that defines the respective operating situation of the internal combustion engine (1) (Figure 1)

No. of Pages : 26 No. of Claims : 15

(12) PATENT APPLICATION PUBLICATION
(19) INDIA
(22) Date of filing of Application :02/06/2014
(21) Application No.4098/CHENP/2014 A
(43) Publication Date : 23/10/2015

(54) Title of the invention : TUBE FOR STORING UNIT DOSES OF A DRUG METHOD AND DEVICE FOR FILLING SAME AND DISPENSING CABINET USING SAME

(51) International classification :A61J7/00,G06K17/00,G07F17/00
(31) Priority Document No :NA
(32) Priority Date :NA
(33) Name of priority country :NA
(86) International Application No :PCT/ES2011/000326
Filing Date :08/11/2011
(87) International Publication No :WO 2013/068604
(61) Patent of Addition to Application Number :NA
Filing Date :NA
(62) Divisional to Application Number :NA
Filing Date :NA

(71)**Name of Applicant :**
1)ISISH HEALTHCARE SYSTEM S.L.
Address of Applicant :C/ Juan Bravo 20 bajo derecha E 28006 Madrid Spain
(72)**Name of Inventor :**
1)LOPEZ LOSADA Rafael Maria
2)ARGELLO MARTINEZ Jos Maria
3)MONTERDE JUNYENT Josep
4)MARTINEZ CUTILLAS Julio

(57) Abstract :
TUBE FOR STORING UNIT DOSES OF A DRUG, METHOD AND DEVICE FOR FILLING SAME AND DISPENSING CABINET USING SAME The invention relates to a tube for storing unit doses of drugs which includes an elongate outer casing having two open ends; an inner structure inside said casing, which includes two opposite symmetrical walls connected at the ends thereof and ribbed on the inner surfaces thereof such as to enable the insertion and fastening of a blister pack containing a unit dose of a drug in channels opposite to said walls; and a pulling means for inserting and extracting the inner structure from the outer casing. The invention also relates to a device and a method for filling said tube with unit doses of drugs, and to a cabinet for dispensing unit doses of drugs from said storage tube. Figure 1A

No. of Pages : 28 No. of Claims : 33

(12) PATENT APPLICATION PUBLICATION
(21) Application No.3991/CHENP/2014 A
(19) INDIA
(22) Date of filing of Application :28/05/2014
(43) Publication Date : 23/10/2015

(54) Title of the invention : INTEGRATING SENSATION FUNCTIONALITIES INTO A MOBILE DEVICE USING A HAPTIC SLEEVE

(51) International classification :G06F3/01,G06F3/041
(31) Priority Document No :61/577615
(32) Priority Date :19/12/2011
(33) Name of priority country :U.S.A.
(86) International Application No :PCT/US2012/070178
Filing Date :17/12/2012
(87) International Publication No :WO 2013/096227
(61) Patent of Addition to Application Number :NA
Filing Date :NA
(62) Divisional to Application Number :NA
Filing Date :NA

(71)**Name of Applicant :**
1)QUALCOMM INCORPORATED
Address of Applicant :Attn: International IP Administration 5775 Morehouse Drive San Diego California 92121 1714 U.S.A.
(72)**Name of Inventor :**
1)SHEYNBLAT Leonid
2)SRIDHARA Vinay
3)DAS Saumitra Mohan

(57) Abstract :
Methods apparatuses systems and computer readable media for integrating sensation functionalities into a mobile device using a haptic sleeve are presented. According to one or more aspects of the disclosure a computing device may receive via a haptic sleeve sensation input captured by one or more haptic components of the haptic sleeve. Subsequently the computing device may store haptic data corresponding to the received sensation input. For example in storing such haptic data the computing device may store information describing one or more electrical signals received via the one or more haptic components of the haptic sleeve during a period of time corresponding to a particular event and this stored information may reflect various characteristics of the sensation input received by the computing device in connection with the particular event such as the magnitude(s) position(s) duration and/or type(s) of sensation(s) captured during the period of time.

No. of Pages : 52 No. of Claims : 44

(12) PATENT APPLICATION PUBLICATION
(19) INDIA
(22) Date of filing of Application :15/04/2014
(21) Application No.1964/CHE/2014 A
(43) Publication Date : 23/10/2015

(54) Title of the invention : SELF GENERATED ELECTRICAL AUTOMATIC PUMP SYSTEM

(51) International classification :F04F
(31) Priority Document No :NA
(32) Priority Date :NA
(33) Name of priority country :NA
(86) International Application No :NA
Filing Date :NA
(87) International Publication No : NA
(61) Patent of Addition to Application Number :NA
Filing Date :NA
(62) Divisional to Application Number :NA
Filing Date :NA

(71)**Name of Applicant :**
1)PRAHLAD, N. JOSHI
Address of Applicant :SONA ELECTRICAL BUILDING, GROUND FLOOR, NEAR ANJANEYASWAMY TEMPLE, AT SHETTIHALLI, JALAHALLI WEST, BENGALURU - 560 015 Karnataka India
(72)**Name of Inventor :**
1)PRAHLAD, N. JOSHI

(57) Abstract :
The present invention relates to a self generated electrical automatic pump system comprising a nozzle, a water wheel, an alternator assembly, a pump, a plurality of wells and a flood gate. The nozzle is fitted inside a predetermined area. The water wheel is present in front of the nozzle. The alternator assembly is connected with the water wheel. The predetermined area is dug under the earth at a predetermined angle having a predetermined slope down the earth. The predetermined angle is 5°C to 15°C horizontally and the slope is 15°C to 25°C. The nozzle is parallel to the slope of the predetermined area. The water wheel rotates when water coming out of the nozzle hits at a perpendicular direction to the vane present on the water wheel. The water wheel is mounted on a pair of supporting stands over a shaft. FIG. 1

No. of Pages : 52 No. of Claims : 16

(12) PATENT APPLICATION PUBLICATION
(21) Application No.4055/CHENP/2014 A
(19) INDIA
(22) Date of filing of Application :30/05/2014
(43) Publication Date : 23/10/2015

(54) Title of the invention : METHODS AND COMPOSITIONS FOR MODULATING GASTROINTESTINAL BACTERIA TO PROMOTE HEALTH

(51) International classification :A61K31/70
(31) Priority Document No :61/555800
(32) Priority Date :04/11/2011
(33) Name of priority country :U.S.A.
(86) International Application No :PCT/US2012/063008
Filing Date :01/11/2012
(87) International Publication No :WO 2013/067146
(61) Patent of Addition to Application Number :NA
Filing Date :NA
(62) Divisional to Application Number :NA
Filing Date :NA

(71)**Name of Applicant :**
1)GENERAL MILLS INC.
Address of Applicant :Number One General Mills Boulevard Minneapolis MN 55426 U.S.A.
(72)**Name of Inventor :**
1)BOILEAU Thomas W.
2)BRULC Jennifer
3)MENON Ravindranath Sreedhar

(57) Abstract :
Methods and compositions for treating medical conditions or improving health in which the composition is ingested in an amount sufficient to modify the proportion of bacteria in a gut microbiome of the individual ingesting the composition. The composition may comprise polydextrose or soluble corn fiber for example. The proportion of Coriobacteriaceae may be decreased to treat conditions such as elevated serum triglycerides nonalcoholic fatty liver disease metabolic syndrome obesity or type 2 diabetes. The proportion of Veillonellaceae may be increased to decrease serum cholesterol. The proportion of Faecalibacterium may be increased to treat inflammatory bowel disease or Chrohn s disease.

No. of Pages : 27 No. of Claims : 38

(12) PATENT APPLICATION PUBLICATION
(19) INDIA
(22) Date of filing of Application :29/05/2014
(21) Application No.4033/CHENP/2014 A
(43) Publication Date : 23/10/2015

(54) Title of the invention : PHOSPHORUS MODIFIED CRACKING CATALYSTS WITH ENHANCED ACTIVITY AND HYDROTHERMAL STABILITY

(51) International classification :B01J37/16,B01J37/04,B01J29/08
(31) Priority Document No :61/555637
(32) Priority Date :04/11/2011
(33) Name of priority country :U.S.A.
(86) International Application No :PCT/US2012/063526
Filing Date :05/11/2012
(87) International Publication No :WO 2013/067481
(61) Patent of Addition to Application Number :NA
Filing Date :NA
(62) Divisional to Application Number :NA
Filing Date :NA

(71)**Name of Applicant :**
1)BASF CORPORATION
Address of Applicant :100 Park Avenue Florham Park New Jersey 07932 U.S.A.
(72)**Name of Inventor :**
1)KELKAR Chandrashekhar Pandurang
2)FU Qi
3)SMITH Gary
4)YILMAZ Bilge

(57) Abstract :
A phosphorus modification of an FCC catalyst is provided by reducing the sodium content of the as formed catalyst a first treatment with a phosphate solution a second ammonium exchange to further reduce the sodium content of the phosphorus solution treated catalyst and a second treatment with a phosphate solution.

No. of Pages : 19 No. of Claims : 10

(12) PATENT APPLICATION PUBLICATION
(19) INDIA
(22) Date of filing of Application :29/05/2014
(21) Application No.4034/CHENP/2014 A
(43) Publication Date : 23/10/2015

(54) Title of the invention : BOTANICAL ANTIMICROBIAL COMPOSITION

(51) International classification :A01N65/00,A61K36/00
(31) Priority Document No :61/555367
(32) Priority Date :03/11/2011
(33) Name of priority country :U.S.A.
(86) International Application No :PCT/US2012/037135
Filing Date :09/05/2012
(87) International Publication No :WO 2013/066403
(61) Patent of Addition to Application Number :NA
Filing Date :NA
(62) Divisional to Application Number :NA
Filing Date :NA

(71)**Name of Applicant :**
1)THE TRUSTEES OF COLUMBIA UNIVERSITY IN THE CITY OF NEW YORK
Address of Applicant :116 Street And Broadway New York NY 10027 U.S.A.
(72)**Name of Inventor :**
1)MODAK Shanta M.
2)DONGRE Santoshkumar
3)CARAOS Lauserpina
4)BAIJU Nayana
5)RAMACHANDRAN Hari Krishnan

(57) Abstract :
Disclosed are compositions comprising antimicrobially effective low concentrations of benzyl alcohol one or more essential oil and one or more botanical extract. The compositions of the application may be used in personal care products including wound care products or in veterinary use. In certain embodiments compositions are provided having antimicrobial active agents that are substantially or essentially entirely derived from natural sources thereby allowing the user to avoid harsh and/or toxic chemicals. This may be particularly advantageous in products for use by or on children or pets or for use in households or other environments occupied by children or animals.

No. of Pages : 92 No. of Claims : 17

(12) PATENT APPLICATION PUBLICATION
(19) INDIA
(22) Date of filing of Application :29/05/2014
(21) Application No.4028/CHENP/2014 A
(43) Publication Date : 23/10/2015

(54) Title of the invention : DEVICE FOR MELT SPINNING AND COOLING SYNTHETIC FILAMENTS

(51) International classification :D01D5/084
(31) Priority Document No :10 2011 117 458.7
(32) Priority Date :02/11/2011
(33) Name of priority country :Germany
(86) International Application No :PCT/EP2012/071646
Filing Date :01/11/2012
(87) International Publication No :WO 2013/064588
(61) Patent of Addition to Application Number :NA
Filing Date :NA
(62) Divisional to Application Number :NA
Filing Date :NA

(71)**Name of Applicant :**
1)OERLIKON TEXTILE GMBH & CO. KG
Address of Applicant :Leverkuser Strasse 65 42897 Remscheid Germany
(72)**Name of Inventor :**
1)REICHWEIN Markus
2)FISCHER Martin
3)NITSCHKE Roland
4)HEGENBARTH Jrg
5)SCHIPPEL Jrg

(57) Abstract :
The invention relates to a device for melt spinning and cooling synthetic filaments. The device has a heated spinning beam which on the underside thereof carries at least one spinneret for extruding the filaments. A cooling device is arranged below the spinning beam which cooling device has a blowing chamber and a perforated cylinder which is arranged inside the blowing chamber and has a gas permeable wall. The perforated cylinder is arranged with an upper end at the spacing below the spinneret for receiving the filaments. In order to avoid deposits and condensation at the upper end of the perforated cylinder a separate heating means is provided according to the invention by way of which heating means the upper end of the perforated cylinder can be warmed.

No. of Pages : 24 No. of Claims : 10

(12) PATENT APPLICATION PUBLICATION
(19) INDIA
(22) Date of filing of Application :29/05/2014
(21) Application No.4029/CHENP/2014 A
(43) Publication Date : 23/10/2015

(54) Title of the invention : PROCESS FOR THE PRODUCTION OF CHLORINATED ALKANES

(51) International classification :C07C17/10,C07C19/01
(31) Priority Document No :61/566213
(32) Priority Date :02/12/2011
(33) Name of priority country :U.S.A.
(86) International Application No :PCT/US2012/067268
Filing Date :30/11/2012
(87) International Publication No :WO 2013/082410
(61) Patent of Addition to Application Number :NA
Filing Date :NA
(62) Divisional to Application Number :NA
Filing Date :NA

(71)**Name of Applicant :**
1)DOW GLOBAL TECHNOLOGIES LLC
Address of Applicant :2040 Dow Center Midland Michigan 48674 U.S.A.
(72)**Name of Inventor :**
1)GRANDBOIS Matthew Lee
2)CHEN Xiaoyun
3)KRUPER William J. Jr.

(57) Abstract :
Processes for the production of chlorinated alkanes are provided. The present processes comprise catalyzing the chlorination of a feedstream comprising one or more alkanes and/or alkenes with a catalyst system comprising one or more inorganic iodine salts and/or lower than conventional levels of elemental iodine and at least one Lewis acid. The processes are conducted in a nonaqueous media and so the one or more inorganic iodine salts are recoverable and/or reusable in whole or in part.

No. of Pages : 15 No. of Claims : 13

(12) PATENT APPLICATION PUBLICATION
(19) INDIA
(22) Date of filing of Application :28/05/2014
(21) Application No.4007/CHENP/2014 A
(43) Publication Date : 23/10/2015

(54) Title of the invention : AUTOINJECTOR

(51) International classification :A61M5/20,A61M5/32
(31) Priority Document No :11190592.3
(32) Priority Date :24/11/2011
(33) Name of priority country :EPO
(86) International Application No :PCT/EP2012/073468
Filing Date :23/11/2012
(87) International Publication No :WO 2013/076247
(61) Patent of Addition to Application Number :NA
Filing Date :NA
(62) Divisional to Application Number :NA
Filing Date :NA

(71)**Name of Applicant :**
1)SANOFI AVENTIS DEUTSCHLAND GMBH
Address of Applicant :Br¼ningstrae 50 65929 Frankfurt am Main Germany
(72)**Name of Inventor :**
1)HENLEY Thomas
2)CROSS David
3)JENNINGS Douglas Ivan
4)MCGINLEY Ryan Anthony

(57) Abstract :
Described is an autoinjector (1) comprising a case (2.1 2.2) a drive carriage (22) disposed in the case (2.1 2.2) and a plunger (11) coupled to the drive carriage (22). The plunger (11) is adapted to releasably engage a needle retraction mechanism in a syringe (3). Translation of the drive carriage (22) in a distal direction (D) relative to the case (2.1 2.2) causes the plunger (11) to engage the needle retraction mechanism and translation of the drive carriage (22) in a proximal direction (P) relative to the casing (2.1 2.2) case the plunger (11) to needle retraction mechanism the stopper (5).

No. of Pages : 40 No. of Claims : 15

(12) PATENT APPLICATION PUBLICATION
(19) INDIA
(22) Date of filing of Application :28/05/2014
(21) Application No.4000/CHENP/2014 A
(43) Publication Date : 23/10/2015

(54) Title of the invention : ACCURATE DOSE CONTROL MECHANISMS AND DRUG DELIVERY SYRINGES

(51) International classification :A61M5/28,A61M5/315
(31) Priority Document No :61/568509
(32) Priority Date :08/12/2011
(33) Name of priority country :U.S.A.
(86) International Application No :PCT/US2012/068210
Filing Date :06/12/2012
(87) International Publication No :WO 2013/086167
(61) Patent of Addition to Application Number :NA
Filing Date :NA
(62) Divisional to Application Number :NA
Filing Date :NA

(71)**Name of Applicant :**
1)UNITRACT SYRINGE PTY LTD
Address of Applicant :Suite 3 Level 11 1 Chifley Square Sydney New South Wales 2000 Australia
(72)**Name of Inventor :**
1)SHETTY Gautam N.
2)CASTAGNA Lou

(57) Abstract :
A dose control mechanism 10 for a syringe includes a plunger 14 having a coarse pitch screw 14B on its exterior surface a housing 20 having a corresponding coarse pitch guide 20C along the interior surface of the housing 20 a screw 30 having a fine pitch screw 30B which interfaces with a fine pitch nut 18B of an adapter 18 wherein the plunger 14 has an internal annular space 14C within which screw 30 at least partially resides. An accurate dose drug delivery syringe includes such a dose control mechanism 10 a barrel 140 a plunger seal 136 and a barrel adapter assembly 150 having a barrel tip 152 and a needle 154. The syringe may be a fill at time of use syringe 100 a pre filled syringe 200 or a safety syringe 300 having integrated needle retraction or needle sheathing safety features or a combination thereof. Methods of assembly manufacturing and operation are similarly disclosed.

No. of Pages : 37 No. of Claims : 18

(12) PATENT APPLICATION PUBLICATION
(21) Application No.4001/CHENP/2014 A
(19) INDIA
(22) Date of filing of Application :28/05/2014
(43) Publication Date : 23/10/2015

(54) Title of the invention : IMAGE CODING APPARATUS IMAGE CODING METHOD IMAGE DECODING APPARATUS IMAGE DECODING METHOD AND PROGRAM

(51) International classification :H04N7/26
(31) Priority Document No :2011243940
(32) Priority Date :07/11/2011
(33) Name of priority country :Japan
(86) International Application No :PCT/JP2012/007065
Filing Date :05/11/2012
(87) International Publication No :WO 2013/069245
(61) Patent of Addition to Application Number :NA
Filing Date :NA
(62) Divisional to Application Number :NA
Filing Date :NA

(71)**Name of Applicant :**
1)CANON KABUSHIKI KAISHA
Address of Applicant :30 2 Shimomaruko 3 chome Ohta ku Tokyo 1468501 Japan
(72)**Name of Inventor :**
1)OKAWA Koji

(57) Abstract :
An image coding apparatus configured to divide an image into one or more slices each including a plurality of blocks and to code each slice on a block by block basis includes a first coding unit configured to code blocks included in a first portion of the slice and a second coding unit configured to code blocks included in a second portion of the slice wherein when the second coding unit codes an initial block in the second portion the second coding unit codes the initial included in the second portion by referring to a first quantization parameter provided to the slice as an initial value and referred to by the first coding unit when the first coding units codes the initial block in the first portion.

No. of Pages : 61 No. of Claims : 10

(12) PATENT APPLICATION PUBLICATION
(19) INDIA
(22) Date of filing of Application :28/05/2014
(21) Application No.4002/CHENP/2014 A
(43) Publication Date : 23/10/2015

(54) Title of the invention : METHOD FOR SECRETING AND PRODUCING PROTEINS

(51) International classification :C12N1/21,C12N15/09,C12P21/02
(31) Priority Document No :2011240745
(32) Priority Date :02/11/2011
(33) Name of priority country :Japan
(86) International Application No :PCT/JP2012/078285
Filing Date :01/11/2012
(87) International Publication No :WO 2013/065772
(61) Patent of Addition to Application Number :NA
Filing Date :NA
(62) Divisional to Application Number :NA
Filing Date :NA

(71)**Name of Applicant :**
1)AJINOMOTO CO. INC.
Address of Applicant :15 1 Kyobashi 1 chome Chuo ku Tokyo 1048315 Japan
(72)**Name of Inventor :**
1)MATSUDA Yoshihiko
2)BEPPU Haruki

(57) Abstract :
Provided is a method for secreting and producing polymeric proteins which exploits novel techniques for improving the polymeric protein secretion and production capabilities of coryneform bacteria. Polymeric proteins are secreted and produced using as expression hosts coryneform bacteria which have polymeric protein secretion and production capabilities and which have been modified so as to have improved expression of genes for coding metallopeptidase.

No. of Pages : 152 No. of Claims : 13

(12) PATENT APPLICATION PUBLICATION
(19) INDIA
(22) Date of filing of Application :29/05/2014
(21) Application No.4035/CHENP/2014 A
(43) Publication Date : 23/10/2015

(54) Title of the invention : A METHOD AND AN APPARATUS TO OPTIMIZE MONITORING FOR A NEW EMBMS SESSION IN LTE NETWORKS

(51) International classification	:H04W72/00,H04W4/06,H04W48/16
(31) Priority Document No	:13/309540
(32) Priority Date	:01/12/2011
(33) Name of priority country	:U.S.A.
(86) International Application No	:PCT/US2012/065714
Filing Date	:16/11/2012
(87) International Publication No	:WO 2013/081866
(61) Patent of Addition to Application Number	:NA
Filing Date	:NA
(62) Divisional to Application Number	:NA
Filing Date	:NA

(71)**Name of Applicant :**
1)QUALCOMM INCORPORATED
Address of Applicant :ATTN: International IP Administration 5775 Morehouse Drive San Diego California 92121 1714 U.S.A.
(72)**Name of Inventor :**
1)AMERGA Daniel
2)MUHAMMAD Imran
3)KAPALLI Giri
4)LEE Kuo Chun
5)MAHESHWARI Shailesh
6)NAGARAJ Thadi M.
7)NARAYANAN Rajesh
8)SHAUH Jack S.

(57) Abstract :
A method an apparatus and a computer program product for wireless communication are provided. The apparatus is configured to monitor for a notification of MCCH information change associated with an MBSFN area without having previously performed an MCCH information acquisition procedure to acquire MCCH information in the MBSFN area. Furthermore the apparatus is configured to acquire the MCCH information while monitoring for the notification of the MCCH information change that indicates a change of MCCH information.

No. of Pages : 55 No. of Claims : 44

(12) PATENT APPLICATION PUBLICATION
(21) Application No.4036/CHENP/2014 A
(19) INDIA
(22) Date of filing of Application :29/05/2014
(43) Publication Date : 23/10/2015

(54) Title of the invention : APPLICATION IMPLEMENTATION METHOD AND DEVICE

(51) International classification :G06F9/445
(31) Priority Document No :201110348337.8
(32) Priority Date :07/11/2011
(33) Name of priority country :China
(86) International Application No :PCT/CN2012/081650
Filing Date :20/09/2012
(87) International Publication No :WO 2013/067856
(61) Patent of Addition to Application Number :NA
Filing Date :NA
(62) Divisional to Application Number :NA
Filing Date :NA

(71)**Name of Applicant :**
1)TENCENT TECHNOLOGY (SHENZHEN) COMPANY LIMITED
Address of Applicant :Room 403 East Block 2 SEG Park Zhenxing Road Futian District Shenzhen Guangdong 518044 China
(72)**Name of Inventor :**
1)ZHANG Ru
2)WANG Qing
3)WU Yu
4)ZENG Xing
5)DAI Yunfeng

(57) Abstract :
Disclosed are an application implementation method and device belonging to the field of communications. The method includes: receiving a behaviour configuration list of an application to be implemented sent by a serving end with the behaviour configuration list including identification and configuration information about an application program interface (API) corresponding to a behaviour contained in the application to be implemented (101); and implementing the application to be implemented according to the identification and configuration information about the API corresponding to the behaviour contained in the application to be implemented (102). The device includes: a receiving module and an implementation module. The present solution can improve the flexibility of application modification and reduce the development costs of application modification.

No. of Pages : 25 No. of Claims : 10

(12) PATENT APPLICATION PUBLICATION
(19) INDIA
(22) Date of filing of Application :29/05/2014
(21) Application No.4037/CHENP/2014 A
(43) Publication Date : 23/10/2015

(54) Title of the invention : PHARMACEUTICAL COMPOSITIONS OF 7 (6 (2 HYDROXYPROPAN 2 YL)PYRIDIN 3 YL) 1 ((TRANS) 4 METHOXYCYCLOHEXYL) 3 4 DIHYDROPYRAZINO [2 3 *B*]PYRAZIN 2(1*H*) ONE A SOLID FORM THEREOF AND METHODS OF THEIR USE

(51) International classification :A61K9/00,A61K9/20,A61K9/28
(31) Priority Document No :61/566109
(32) Priority Date :02/12/2011
(33) Name of priority country :U.S.A.
(86) International Application No :PCT/US2012/067172
Filing Date :30/11/2012
(87) International Publication No:WO 2013/082344
(61) Patent of Addition to Application Number :NA
Filing Date :NA
(62) Divisional to Application Number :NA
Filing Date :NA

(71)**Name of Applicant :**
1)SIGNAL PHARMACEUTICALS LLC
Address of Applicant :4550 Towne Centre Court San Diego CA 92121 U.S.A.
(72)**Name of Inventor :**
1)ASSAF Mahmoud S.
2)CONNOLLY Terrence Joseph
3)JAMES Angela Joubert
4)KLOPFER Kevin Joseph
5)LEONG William Wei Hwa
6)MENON Anil
7)MIKLOS Amanda Nicole

(57) Abstract :
tran)SbHProvided herein are compositions of 7 (6 (2 hydroxypropan 2 yl)pyridin 3 yl) l ((4 methoxycyclohexyl) 3 4 dihydropyrazino[2 3]pyrazin 2(1) one solid forms isotopologues and metabolites thereof and methods of their use for the treatment of a disease disorder or condition.

No. of Pages : 199 No. of Claims : 32

(12) PATENT APPLICATION PUBLICATION
(19) INDIA
(22) Date of filing of Application :29/05/2014
(21) Application No.4039/CHENP/2014 A
(43) Publication Date : 23/10/2015

(54) Title of the invention : METHOD FOR SECRETORY PRODUCTION OF PROTEIN

(51) International classification	:C12R1/15,C07K14/34,C12N15/77
(31) Priority Document No	:2011144497
(32) Priority Date	:02/11/2011
(33) Name of priority country	:Russia
(86) International Application No	:PCT/JP2012/078906
Filing Date	:01/11/2012
(87) International Publication No	:WO 2013/065869
(61) Patent of Addition to Application Number	:NA
Filing Date	:NA
(62) Divisional to Application Number	:NA
Filing Date	:NA

(71)**Name of Applicant :**
1)AJINOMOTO CO.INC.
Address of Applicant :15 1 Kyobashi 1 chome Chuo ku Tokyo 1048315 Japan
(72)**Name of Inventor :**
1)MATSUDA Yoshihiko
2)ITAYA Hiroshi
3)KIKUCHI Yoshimi
4)BEPPU Haruki
5)JOMANTAS Jurgis Antanas Vladovich
6)KUTUKOVA Ekaterina Aleksandrovna

(57) Abstract :
A method for secretory production of a heterologous protein is provided by developing a novel technique for improving ability of a coryneform bacterium to produce a heterologous protein by secretory production. By utilizing a coryneform bacterium having an ability to produce a heterologous protein by secretory production which has been modified so that activity of a penicillin binding protein is reduced and in which activity of a cell surface layer protein has been reduced as an expression host a heterologous protein is produced by secretory production.

No. of Pages : 132 No. of Claims : 13

(12) PATENT APPLICATION PUBLICATION
(21) Application No.4040/CHENP/2014 A
(19) INDIA
(22) Date of filing of Application :29/05/2014
(43) Publication Date : 23/10/2015

(54) Title of the invention : COMPOSITION FOR POLYMERIC FOAM COMPRISING STYRENIC POLYMER POLYETHYLENE WAX AND BROMINATED VINYLAROMATIC/BUTADIEN COPOLYMER

(51) International classification :C08L25/06,C08J9/00,C08L53/02
(31) Priority Document No :2011264399
(32) Priority Date :02/12/2011
(33) Name of priority country :Japan
(86) International Application No :PCT/US2012/066508
Filing Date :26/11/2012
(87) International Publication No :WO 2013/081958
(61) Patent of Addition to Application Number :NA
Filing Date :NA
(62) Divisional to Application Number :NA
Filing Date :NA

(71)**Name of Applicant :**
1)DOW GLOBAL TECHNOLOGIES LLC
Address of Applicant :2040 Dow Center Midland MI 48674 U.S.A.
(72)**Name of Inventor :**
1)MATSUE Kenji
2)NISHIOKA Naganori

(57) Abstract :
A polymer composition containing a polymer component containing styrenic polymer a brominated vinyl aromatic / butadiene copolymer and a polyethylene wax concentration of the polyethylene wax is 0.02 to 1.0 weight percent based on weight of the polymer component the polyethylene wax has average molecular weight of 10 000 g/mol or less than 10 000 g/mol. The polymer composition can be a polymeric foam.

No. of Pages : 19 No. of Claims : 7

(12) PATENT APPLICATION PUBLICATION
(21) Application No.4042/CHENP/2014 A
(19) INDIA
(22) Date of filing of Application :29/05/2014
(43) Publication Date : 23/10/2015

(54) Title of the invention : METHOD FOR PAPER POLISHING GRAVURE PLATE MAKING ROLL AND PAPER POLISHING DEVICE

(51) International classification :B41C1/02,B24B5/36,B24B21/00
(31) Priority Document No :2012024263
(32) Priority Date :07/02/2012
(33) Name of priority country :Japan
(86) International Application No :PCT/JP2013/052031
Filing Date :30/01/2013
(87) International Publication No :WO 2013/118620
(61) Patent of Addition to Application Number :NA
Filing Date :NA
(62) Divisional to Application Number :NA
Filing Date :NA

(71)**Name of Applicant :**
1)THINK LABORATORY CO. LTD.
Address of Applicant :1201 11 Takada Kashiwa shi Chiba 2778525 Japan
(72)**Name of Inventor :**
1)SUZUKI Shigeru
2)SHIGETA Tatsuo

(57) Abstract :
Provided are a paper polishing method and a paper polishing device configured to prevent any incidence of doctor blade induced scratching adhesion of soiling or other adverse events during printing after a plate has been manufactured. A paper polishing method in which a paper polishing device of a fully automated gravure plate making processing system is used a polishing cloth being pressed on the circumferential surface of a plate making roll and polishing indentations due to the coated abrasive are formed on the non coverage portions of a plate surface at a predetermined angle relative to the normal to the circumferential surface of the plate making roll. The polishing indentations include those at an inclination of ±46 90°.

No. of Pages : 26 No. of Claims : 10

(12) PATENT APPLICATION PUBLICATION
(21) Application No.4043/CHENP/2014 A
(19) INDIA
(22) Date of filing of Application :29/05/2014
(43) Publication Date : 23/10/2015

(54) Title of the invention : CONCRETE MIX COMPOSITION MORTAR MIX COMPOSITION AND METHOD OF MAKING AND CURING CONCRETE OR MORTAR AND CONCRETE OR MORTAR OBJECTS AND STRUCTURES

(51) International classification :C04B7/14,C04B7/19,C04B11/00
(31) Priority Document No :61/558467
(32) Priority Date :11/11/2011
(33) Name of priority country :U.S.A.
(86) International Application No :PCT/US2012/057103
Filing Date :25/09/2012
(87) International Publication No :WO 2013/070328
(61) Patent of Addition to Application Number :NA
Filing Date :NA
(62) Divisional to Application Number :NA
Filing Date :NA

(71)**Name of Applicant :**
1)CIUPERCA Romeo Ilarian
Address of Applicant :4363 Whitecap Lane Norcross GA 30092 U.S.A.
(72)**Name of Inventor :**
1)CIUPERCA Romeo Ilarian

(57) Abstract :
The invention comprises a method of making a cement based object or structure having a compressive strength greater than about 1 000 psi. The method comprises placing a cement based material in an insulated concrete form wherein the insulated concrete form has an R value of at least 1.5 wherein the cement based material comprises approximately 10% to approximately 80% by weight portland cement and at least one of approximately 10% to approximately 90% by weight slag cement and approximately 5% to approximately 80% by weight fly ash. The invention also comprises a method of making a cement based object or structure. The invention further comprises objects or structures made by the foregoing methods.

No. of Pages : 112 No. of Claims : 30

(12) PATENT APPLICATION PUBLICATION
(19) INDIA
(22) Date of filing of Application :26/05/2014
(21) Application No.3961/CHENP/2014 A
(43) Publication Date : 23/10/2015

(54) Title of the invention : FACILITATING SYSTEM SERVICE REQUEST INTERACTIONS FOR HARDWARE PROTECTED APPLICATIONS

(51) International classification :G06F21/60,G06F15/16,G06F9/44
(31) Priority Document No :13/323562
(32) Priority Date :12/12/2011
(33) Name of priority country :U.S.A.
(86) International Application No :PCT/US2012/067660
Filing Date :04/12/2012
(87) International Publication No :WO 2013/090044
(61) Patent of Addition to Application Number :NA
Filing Date :NA
(62) Divisional to Application Number :NA
Filing Date :NA

(71)**Name of Applicant :**
1)MICROSOFT CORPORATION
Address of Applicant :One Microsoft Way Redmond Washington 98052 6399 U.S.A.
(72)**Name of Inventor :**
1)BAUMANN Andrew A.
2)HUNT Galen C.
3)PEINADO Marcus

(57) Abstract :
Described herein are implementations for providing a platform adaptation layer that enables applications to execute inside a user mode hardware protected isolation container while utilizing host platform resources that reside outside of the isolation container. The platform adaptation layer facilitates a system service request interaction between the application and the host platform. As part of the facilitating a secure services component of the platform adaptation layer performs a security relevant action.

No. of Pages : 27 No. of Claims : 10

(12) PATENT APPLICATION PUBLICATION
(19) INDIA
(22) Date of filing of Application :26/05/2014
(21) Application No.3962/CHENP/2014 A
(43) Publication Date : 23/10/2015

(54) Title of the invention : DISPLAY OF SHADOWS VIA SEE THROUGH DISPLAY

(51) International classification :G06T17/00,G02B27/01
(31) Priority Document No :13/323403
(32) Priority Date :12/12/2011
(33) Name of priority country :U.S.A.
(86) International Application No :PCT/US2012/069316
Filing Date :12/12/2012
(87) International Publication No :WO 2013/090474
(61) Patent of Addition to Application Number :NA
Filing Date :NA
(62) Divisional to Application Number :NA
Filing Date :NA

(71)**Name of Applicant :**
1)MICROSOFT CORPORATION
Address of Applicant :One Microsoft Way Redmond Washington 98052 6399 U.S.A.
(72)**Name of Inventor :**
1)LAMB Mathew

(57) Abstract :
Various embodiments are disclosed that relate to the presentation of images of shadows cast over a real world background by images of objects displayed on a see through display. For example one disclosed embodiment provides a method of operating a display device having a see through display screen The method comprises displaying on the see through display screen an image of an object and while displaying the image of the object displaying an image of a shadow cast by the object onto the background scene by acquiring an image of a background scene determining a location of the shadow in the image of the background scene rendering an enhanced image of the background scene by increasing a relative brightness in a region adjacent to the shadow compared to a brightness within the shadow and displaying the enhanced image of the background scene.

No. of Pages : 21 No. of Claims : 20

(12) PATENT APPLICATION PUBLICATION
(19) INDIA
(22) Date of filing of Application :26/05/2014
(21) Application No.3952/CHENP/2014 A
(43) Publication Date : 23/10/2015

(54) Title of the invention : METHOD FOR LOW PRESSURE CARBONITRIDING USING A REDUCED TEMPERATURE GRADIENT IN AN INITIAL NITRIDATION PHASE

(51) International classification :C23C8/02,C23C8/32,C23C8/34
(31) Priority Document No :1159877
(32) Priority Date :31/10/2011
(33) Name of priority country :France
(86) International Application No :PCT/EP2012/069889
Filing Date :08/10/2012
(87) International Publication No :WO 2013/064336
(61) Patent of Addition to Application Number :NA
Filing Date :NA
(62) Divisional to Application Number :NA
Filing Date :NA

(71)**Name of Applicant :**
1)ECM TECHNOLOGIES
Address of Applicant :46 Rue Jean Vaujany TECHNISUD F 38029 Grenoble Cedex France
(72)**Name of Inventor :**
1)LAPIERRE Philippe
2)LARDINOIS Jr´me
3)GIRAUD Yves
4)RALLO Alfred

(57) Abstract :
The invention relates to a method for the low pressure carbonitriding of steel parts in particular parts used in the manufacture of automobiles comprising: a heating step that includes a simple heating phase (M) followed by an initial nitridation phase (Ni) from a temperature between 700°C and 750° C to a temperature between 860° C and 1000° C and is carried out using a reduced temperature gradient relative to the simple heating phase; and alternate cementing (C1 Cn) and nitridation (N1 Nn) steps at constant temperature; wherein the final nitridation step is accompanied with a decrease in temperature immediately before a quenching step (T).

No. of Pages : 13 No. of Claims : 10

(12) PATENT APPLICATION PUBLICATION
(19) INDIA
(22) Date of filing of Application :27/05/2014
(21) Application No.3970/CHENP/2014 A
(43) Publication Date : 23/10/2015

(54) Title of the invention : COOLANT SUPPLY DEVICE AND SUPPLY METHOD

(51) International classification :B23Q11/10,B23B47/00,F04B49/06
(31) Priority Document No :NA
(32) Priority Date :NA
(33) Name of priority country :NA
(86) International Application No :PCT/JP2011/075038
Filing Date :31/10/2011
(87) International Publication No :WO 2013/065097
(61) Patent of Addition to Application Number :NA
Filing Date :NA
(62) Divisional to Application Number :NA
Filing Date :NA

(71)**Name of Applicant :**
1)Nippon Oil Pump Co.Ltd.
Address of Applicant :634 Kubojima Kumagaya shi Saitama 3600831 Japan
(72)**Name of Inventor :**
1)KAWANO Yuji

(57) Abstract :
The purpose of the invention is to provide a coolant supply device and supply method that can appropriately control the spraying of coolant using a single parameter. To that end the invention is provided with a pump (101) that supplies coolant to a tool (D) a measurement device (22) that measures the discharge pressure of the pump (101) and a control device (50). The control device (50) has a function for determining from the rotation rate of the pump (101) the coolant flow path diameter for the tool (D) and the target value for the pump discharge pressure (target pressure) when the tool (D) is drilling.

No. of Pages : 41 No. of Claims : 4

(12) PATENT APPLICATION PUBLICATION
(19) INDIA
(22) Date of filing of Application :30/05/2014
(21) Application No.4067/CHENP/2014 A
(43) Publication Date : 23/10/2015

(54) Title of the invention : DUAL INHIBITOR OF MET AND VEGF FOR TREATING CANCER

(51) International classification :A61K31/47,A61K31/517,A61P35/00
(31) Priority Document No :61/557358
(32) Priority Date :08/11/2011
(33) Name of priority country :U.S.A.
(86) International Application No :PCT/US2012/064116
Filing Date :08/11/2012
(87) International Publication No :WO 2013/070890
(61) Patent of Addition to Application Number :NA
Filing Date :NA
(62) Divisional to Application Number :NA
Filing Date :NA

(71)**Name of Applicant :**
1)EXELIXIS INC.
Address of Applicant :210 East Grand Ave. South San Francisco CA 94080 U.S.A.
(72)**Name of Inventor :**
1)AFTAB Dana T
2)SCHIMMOLLER Frauke

(57) Abstract :
This invention is directed to the treatment of cancer particularly castration resistant prostate cancer and bone metastases with a dual inhibitor of MET and VEGF.

No. of Pages : 54 No. of Claims : 10

(12) PATENT APPLICATION PUBLICATION
(19) INDIA
(22) Date of filing of Application :30/05/2014
(21) Application No.4068/CHENP/2014 A
(43) Publication Date : 23/10/2015

(54) Title of the invention : BOTTLING LINE AND METHOD

(51) International classification :B29C49/46,B29L31/56,B65B3/02
(31) Priority Document No :BO2011A000691
(32) Priority Date :02/12/2011
(33) Name of priority country :Italy
(86) International Application No :PCT/IB2012/056922
Filing Date :03/12/2012
(87) International Publication No :WO 2013/080189
(61) Patent of Addition to Application Number :NA
Filing Date :NA
(62) Divisional to Application Number :NA
Filing Date :NA

(71)**Name of Applicant :**
1)SACMI COOPERATIVA MECCANICI IMOLA SOCIETA COOPERATIVA
Address of Applicant :Via Selice Provinciale 17/A I 40026 Imola Italy
(72)**Name of Inventor :**
1)MARASTONI Daniele

(57) Abstract :
A continuous cycle bottling line (1) for containers of thermoplastic material comprises: a parison (4) moulding unit (3); a thermal conditioning unit (6) for the parisons (4); a blow moulding unit (10); a filling unit (12) configured to receive the blow moulded containers (11) from the blow moulding unit (10) and to fill them with liquid or semi liquid food products; a moulding unit (13) for making caps (14) of plastic material; a capping unit (15); a storage system (2) which is configured to contain the parisons (4) and the caps (14) which is interconnected with the units making up the line and which defines inside it a controlled atmosphere environment; the line defines an integrated system where the connections of the different units with each other and with the storage system (2) are located in a controlled atmosphere environment.

No. of Pages : 49 No. of Claims : 21

(12) PATENT APPLICATION PUBLICATION
(19) INDIA
(22) Date of filing of Application :30/05/2014
(21) Application No.4069/CHENP/2014 A
(43) Publication Date : 23/10/2015

(54) Title of the invention : GENIPIN RICH MATERIAL AND ITS USE

(51) International classification :A23L1/00,A23L1/015,A23L1/275
(31) Priority Document No :61/556441
(32) Priority Date :07/11/2011
(33) Name of priority country :U.S.A.
(86) International Application No :PCT/US2012/063836
Filing Date :07/11/2012
(87) International Publication No :WO 2013/070682
(61) Patent of Addition to Application Number :NA
Filing Date :NA
(62) Divisional to Application Number :NA
Filing Date :NA

(71)**Name of Applicant :**
1)WILD FLAVORS INC.
Address of Applicant :1261 Pacific Avenue Erlanger KY 41018 U.S.A.
(72)**Name of Inventor :**
1)WU Shaowen
2)HORN Gregory

(57) Abstract :
Genipa americanaA method of preparing genipin rich materials from the fruit of fruit for their use as a cross linking agent and as a raw material to produce colors is disclosed. The genipin rich materials can be used in a broad range of applications including personal care cosmetics dietary supplements packaging textiles beverages foodstuffs drugs and animal feeds.

No. of Pages : 26 No. of Claims : 21

(12) PATENT APPLICATION PUBLICATION
(21) Application No.2021/CHE/2014 A
(19) INDIA
(22) Date of filing of Application :19/04/2014
(43) Publication Date : 23/10/2015

(54) Title of the invention : IMPROVED PROCESSES FOR THE PREPARATION OF RIFAXIMIN

(51) International classification :C07D498/00
(31) Priority Document No :NA
(32) Priority Date :NA
(33) Name of priority country :NA
(86) International Application No :NA
Filing Date :NA
(87) International Publication No : NA
(61) Patent of Addition to Application Number :NA
Filing Date :NA
(62) Divisional to Application Number :NA
Filing Date :NA

(71)**Name of Applicant :**
1)Granules India Limited
Address of Applicant :2nd Floor, 3rd Block, My Home Hub, Madhapur Hyderabad, Andhra Pradesh India. Andhra Pradesh India
(72)**Name of Inventor :**
1)VETUKURI VENKATA NAGA KALI VARA PRASADA RAJU
2)BOINI AMBAIAH
3)CHIGURUPATI KRISHNA PRASAD

(57) Abstract :
Improved processes for the preparation of Rifaximin. Particularly, improved processes for the preparation of Rifaximin from Rifamycin O and S. More particularly a novel polymorph of Rifaximin and process for its preparation are provided.

No. of Pages : 18 No. of Claims : 20

(12) PATENT APPLICATION PUBLICATION
(19) INDIA
(22) Date of filing of Application :28/05/2014
(21) Application No.3988/CHENP/2014 A
(43) Publication Date : 23/10/2015

(54) Title of the invention : NON AQUEOUS WHITE INKJET INKS

(51) International classification :C09D11/10
(31) Priority Document No :11191663.1
(32) Priority Date :02/12/2011
(33) Name of priority country :EPO
(86) International Application No :PCT/EP2012/073060
Filing Date :20/11/2012
(87) International Publication No :WO 2013/079355
(61) Patent of Addition to Application Number :NA
Filing Date :NA
(62) Divisional to Application Number :NA
Filing Date :NA

(71)**Name of Applicant :**
1)AGFA GRAPHICS NV
Address of Applicant :IP Department 3622 Septestraat 27 B 2640 Mortsel Belgium
(72)**Name of Inventor :**
1)SMET Stefaan
2)ANDRE Xavier

(57) Abstract :
333A white inkjet ink including a liquid ink vehicle; a first inorganic pigment with a refractive index greater than 1.60 having an average particle size A larger than 200 nm; and a second inorganic pigment having an average particle size B between 40 nm and 90 nm; wherein the number of particles per mm NAB complies with the relation : Formula (I) with NA representing the number of particles per mm having a particle size in the range of A 20 nm to A + 20 nm; NB representing the number of particles per mm having a particle size in the range of B 20 nm to B + 20 nm; and wherein the average particle size A is measured by transmission electron microscopy at a 13 500x magnification on a 10 pm thick coated layer of the white inkjet ink for all inorganic particles having a particle size larger than 100 nm; the average particle size B is measured by transmission electron microscopy at a 58 000x magnification on the same 10 pm thick coated layer of the white inkjet ink for all inorganic particles having a particle size of no more than 100 nm.

No. of Pages : 47 No. of Claims : 15

(12) PATENT APPLICATION PUBLICATION
(19) INDIA
(22) Date of filing of Application :28/05/2014
(21) Application No.3989/CHENP/2014 A
(43) Publication Date : 23/10/2015

(54) Title of the invention : METHOD AND APPARATUS FOR OPTIMIZING CBS SERVICE IN A MULTIPLE SIM ENVIRONMENT

(51) International classification :H04W4/06,H04W88/06
(31) Priority Document No :61/569056
(32) Priority Date :09/12/2011
(33) Name of priority country :U.S.A.
(86) International Application No :PCT/US2012/068042
Filing Date :05/12/2012
(87) International Publication No :WO 2013/086055
(61) Patent of Addition to Application Number :NA
Filing Date :NA
(62) Divisional to Application Number :NA
Filing Date :NA

(71)**Name of Applicant :**
1)QUALCOMM INCORPORATED
Address of Applicant :Attn: International IP Administration 5775 Morehouse Drive San Diego California 92121 U.S.A.
(72)**Name of Inventor :**
1)HANCHATE Naveen Kumar
2)KULAKCHERLA Sudheer

(57) Abstract :
In a mobile communication device having multiple subscriber identification modules (SIMs) the processing of cell broadcast service (CBS) messages is optimized. It is determined whether both a first SIM (SIM1) and a second SIM (SIM2) camp on the same PLMN. If this is the case then a combined CBS message list comprising message IDs of CBS messages to be received is generated. This combined CBS message list includes message IDs from the individual CBS message lists of SIM1 and SIM2. Then it is determined whether SIM1 and SIM2 moreover camp on the same cell. If this is the case then it is sufficient when only one of SIM1 and SIM2 monitors and processes CBS messages from the combined CBS message list and a selected one of SIM1 and SIM2 is correspondingly instructed. If however SIM1 and SIM2 camp on the same PLMN but on different cells then the geographic scope indication of a received CBS message is analyzed and only if the geographic scope indicates PLMN wide then the same handling as described above is carried out.

No. of Pages : 26 No. of Claims : 22

(12) PATENT APPLICATION PUBLICATION
(19) INDIA
(22) Date of filing of Application :28/05/2014
(21) Application No.3983/CHENP/2014 A
(43) Publication Date : 23/10/2015

(54) Title of the invention : SHORT CHAIN ALKYL SULFONATES IN PESTICIDE FORMULATIONS AND APPLICATIONS

(51) International classification	:A01N25/22,A01N25/30,A01N57/20
(31) Priority Document No	:61/567702
(32) Priority Date	:07/12/2011
(33) Name of priority country	:U.S.A.
(86) International Application No	:PCT/EP2012/074296
Filing Date	:04/12/2012
(87) International Publication No	:WO 2013/083537
(61) Patent of Addition to Application Number	:NA
Filing Date	:NA
(62) Divisional to Application Number	:NA
Filing Date	:NA

(71)**Name of Applicant :**
1)AKZO NOBEL CHEMICALS INTERNATIONAL B.V.
Address of Applicant :Stationsstraat 77 NL 3811 MH Amersfoort Netherlands
(72)**Name of Inventor :**
1)ALEXANDER Mark

(57) Abstract :
The present invention relates to pesticide formulations containing at least one pesticide active a hydrotrope comprising a short chain alkyl sulfonate and an adjuvant wherein the weight ratio of the pesticide active to the adjuvant is from about 1:1 to about 1:5. The present invention also relates to herbicide formulations containing at least one herbicidal active comprising glufosinate ammonium a hydrotrope comprising sodium octane sulfonate and an adjuvant comprising a sodium salt of C8 ether sulfate wherein the weight ratio of the herbicide active to the adjuvant is about 1:1. The present invention also further relates to methods of providing pesticide protection to an agricultural crop by applying the pesticide formulations of the present invention to the crop.

No. of Pages : 19 No. of Claims : 10

(12) PATENT APPLICATION PUBLICATION
(19) INDIA
(22) Date of filing of Application :28/05/2014
(21) Application No.3984/CHENP/2014 A
(43) Publication Date : 23/10/2015

(54) Title of the invention : GATE ROUNDING FOR REDUCED TRANSISTOR LEAKAGE CURRENT

(51) International classification :H01L29/78,H01L21/336
(31) Priority Document No :NA
(32) Priority Date :NA
(33) Name of priority country :NA
(86) International Application No :PCT/CN2011/083934
Filing Date :14/12/2011
(87) International Publication No :WO 2013/086693
(61) Patent of Addition to Application Number :NA
Filing Date :NA
(62) Divisional to Application Number :NA
Filing Date :NA

(71)**Name of Applicant :**
1)QUALCOMM INCORPORATED
Address of Applicant :International IP Administration 5775 Morehouse Drive San Diego California 92121 1714 U.S.A.
(72)**Name of Inventor :**
1)CAI Yanfei
2)LI Ji

(57) Abstract :
Gate rounding fabrication techniques can be implemented to increase an effective channel length of a transistor and to consequently reduce the leakage current and static power consumption associated with the transistor. The transistor comprises a substrate region that includes a source region and a drain region. The transistor can also comprise a gate region that includes a main gate portion one or more gate tips and one or more corresponding gate rounded portions. Each of the one or more gate tips is formed at a suitable position along the side of the main gate portion. During fabrication the junction between the main gate region and each of the gate tips takes on a rounded shape to form a corresponding gate rounded region. The gate rounded regions increase the average length of the gate region and the effective channel length of the transistor.

No. of Pages : 32 No. of Claims : 29

(12) PATENT APPLICATION PUBLICATION
(21) Application No.3987/CHENP/2014 A
(19) INDIA
(22) Date of filing of Application :28/05/2014
(43) Publication Date : 23/10/2015

(54) Title of the invention : COMPOSITION FOR DISSOLVING AND/OR INHIBITING DEPOSITION OF SCALE ON A SURFACE OF A SYSTEM

(51) International classification :C23F14/02,C11D11/00,C02F5/10
(31) Priority Document No :61/565090
(32) Priority Date :30/11/2011
(33) Name of priority country :U.S.A.
(86) International Application No :PCT/IB2012/002815
Filing Date :29/11/2012
(87) International Publication No :WO 2013/080043
(61) Patent of Addition to Application Number :NA
Filing Date :NA
(62) Divisional to Application Number :NA
Filing Date :NA

(71)**Name of Applicant :**
1)BASF SE
Address of Applicant :67056 Ludwigshafen Germany
(72)**Name of Inventor :**
1)BORST Joseph P.
2)HIRSCH Keith
3)GROSS Stephen F.

(57) Abstract :
A composition for dissolving and/or inhibiting deposition of scale on a surface of a system comprises an acidic component a wetting agent and a corrosion inhibitor. The composition may further comprise water. The acidic component comprises an alkanesulfonic acid e.g. methanesulfonic acid (MSA). The wetting agent comprises a surfactant. The corrosion inhibitor comprises an amphoteric surfactant. The alkanesulfonic acid is present in an amount of at least about 50 weight percent (wt%) the surfactant is present in an amount of from about 0.1 to about 30 wt% and the amphoteric surfactant is present in an amount of from about 0.025 to about 20 wt% each based on 100 wt% of the alkanesulfonic acid the surfactant and the amphoteric surfactant combined. A method of dissolving and/or inhibiting deposition of scale on the surface of the system comprises the step of contacting the surface of the system with the composition.

No. of Pages : 41 No. of Claims : 20

(12) PATENT APPLICATION PUBLICATION
(19) INDIA
(22) Date of filing of Application :14/07/2014
(21) Application No.1476/KOLNP/2014 A
(43) Publication Date : 23/10/2015

(54) Title of the invention : BANDWIDTH MANAGEMENT IN A HOME NETWORK

(51) International classification :H04W28/20
(31) Priority Document No :13/330070
(32) Priority Date :19/12/2011
(33) Name of priority country :U.S.A.
(86) International Application No :PCT/IB2012/057495
Filing Date :19/12/2012
(87) International Publication No :WO 2013/093810
(61) Patent of Addition to Application Number :NA
Filing Date :NA
(62) Divisional to Application Number :NA
Filing Date :NA

(71)**Name of Applicant :**
1)TELEFONAKTIEBOLAGET LM ERICSSON (PUBL)
Address of Applicant :S 164 83 Stockholm Sweden
(72)**Name of Inventor :**
1)KATYAL Ganish
2)GODIN Andre
3)GAVITA Edoardo

(57) Abstract :
A node in home network serves as a coordinator to coordinate the use of bandwidth by clients that voluntarily cooperate with one another to share bandwidth on different network connections. Specifically the coordinator maintains information for these network connections that logically represents the different connections as independent pools of usable bandwidth. This bandwidth information also indicates the amount of bandwidth available for use from each pool. The coordinator receives advertisements from clients advertising tentative use of a specified amount of bandwidth drawn from each of one or more pools. Responsive to these advertisements the coordinator notifies clients regarding whether or not according to the bandwidth information the one or more pools from which their respective advertised uses would draw from each have the specified amount of bandwidth available. Finally the coordinator independently updates each pool to indicate that any bandwidth notified as being available from that pool is now unavailable.

No. of Pages : 25 No. of Claims : 23

(12) PATENT APPLICATION PUBLICATION
(19) INDIA
(22) Date of filing of Application :14/07/2014
(21) Application No.1477/KOLNP/2014 A
(43) Publication Date : 23/10/2015

(54) Title of the invention : PREPARATION OF AN AQUEOUS REAGENT FOR THE ABSORPTION OR DESTRUCTION OF POLLUTANTS

(51) International classification :B09C1/08,B01D53/62,C01B15/043
(31) Priority Document No :61/577894
(32) Priority Date :20/12/2011
(33) Name of priority country :U.S.A.
(86) International Application No :PCT/IL2012/000394
Filing Date :20/12/2012
(87) International Publication No :WO 2013/093903
(61) Patent of Addition to Application Number :NA
Filing Date :NA
(62) Divisional to Application Number :NA
Filing Date :NA

(71)**Name of Applicant :**
1)YISSUM RESEARCH DEVELOPMENT COMPANY OF THE HEBREW UNIVERSITY OF JERUSALEM LTD.
Address of Applicant :Hi tech Park Edmond J Safra Campus Givat Ram P.O. Box 39135 91390 Jerusalem
(72)**Name of Inventor :**
1)SASSON Yoel
2)STOIN Uri
3)BARNEA Zach

(57) Abstract :
Process for treating a medium by the removal or destruction of one or more undesired substances present in said medium comprising combining hydrogen peroxide and alkali hydroxide in an aqueous solution to form superoxide and bringing the resultant superoxide containing solution into contact with said medium. The process is useful for the destruction of halogenated organic pollutants and also for carbon dioxide removal from flue gases. The process can also be applied for soil remediation.

No. of Pages : 43 No. of Claims : 18

(12) PATENT APPLICATION PUBLICATION
(21) Application No.1478/KOLNP/2014 A
(19) INDIA
(22) Date of filing of Application :14/07/2014
(43) Publication Date : 23/10/2015

(54) Title of the invention : MULTI BAND CREST FACTOR REDUCTION

(51) International classification :H04L27/26
(31) Priority Document No :13/333736
(32) Priority Date :21/12/2011
(33) Name of priority country :U.S.A.
(86) International Application No :PCT/SE2012/051124
Filing Date :19/10/2012
(87) International Publication No :WO 2013/095251
(61) Patent of Addition to Application Number :NA
Filing Date :NA
(62) Divisional to Application Number :NA
Filing Date :NA

(71)**Name of Applicant :**
1)TELEFONAKTIEBOLAGET L M ERICSSON (PUBL)
Address of Applicant :SE 164 83 Stockholm Sweden
(72)**Name of Inventor :**
1)REXBERG Leonard
2)MALMQVIST Håkan

(57) Abstract :
Clipping a widely separated multi carrier signal is effectively performed without having to use a high sampling speed. Clipping is performed in a first stage at a combined signal level but with a predetermined carrier separation of at least twice the channel bandwidth (2CBW) followed by repositioning the carriers at baseband zero frequency. After clipping carriers are placed at their respective center frequencies with full carrier separation reintroduced in a second stage. Iterative clipping stages smooth out signal reshaping and re settled amplitudes for combined carriers.

No. of Pages : 35 No. of Claims : 18

(12) PATENT APPLICATION PUBLICATION
(21) Application No.1479/KOLNP/2014 A
(19) INDIA
(22) Date of filing of Application :14/07/2014
(43) Publication Date : 23/10/2015

(54) Title of the invention : METHOD AND RADIO NODE FOR CONTROLLING CHANGE OF COMMUNICATION MODE

(51) International classification :H04B1/04,H04B1/44
(31) Priority Document No :NA
(32) Priority Date :NA
(33) Name of priority country :NA
(86) International Application No :PCT/SE2011/051564
Filing Date :21/12/2011
(87) International Publication No :WO 2013/095229
(61) Patent of Addition to Application Number :NA
Filing Date :NA
(62) Divisional to Application Number :NA
Filing Date :NA

(71)**Name of Applicant :**
1)TELEFONAKTIEBOLAGET LM ERICSSON (publ)
Address of Applicant :S 164 83 Stockholm Sweden
(72)**Name of Inventor :**
1)NEJATIAN Alireza
2)SU Youping

(57) Abstract :
Method and radio node(500) for controlling a change of communication mode between transmit mode and receive mode according to a Time Division Duplex TDD scheme. The radio node has at least two parallel branches (504 06) for transmission and reception of radio signals wherein the branches currently operate in a first communication mode. The radio node obtains one or more indication signals (S1A S1B) generated by one or more of the branches to indicate that the first mode has been turned off. When it is determined that the first communication mode has not been turned off in a faulty branch e.g. by not receiving an indication signal in time from that branch the first mode is disabled in the faulty branch and/or the faulty branch is reported to a supervision centre (510). Thereby it can be discovered when one of the branches is misaligned or otherwise faulty and suitable actions can be taken for repairing or replacing the faulty branch.

No. of Pages : 29 No. of Claims : 18

(12) PATENT APPLICATION PUBLICATION
(19) INDIA
(22) Date of filing of Application :03/07/2014
(21) Application No.1410/KOLNP/2014 A
(43) Publication Date : 23/10/2015

(54) Title of the invention : METHODS AND APPARATUS FOR LINK ADAPTATION FOR SINGLE USER AND MULTI USER MIMO

(51) International classification :H04L1/00,H04L5/00,H04W72/12
(31) Priority Document No :13/342650
(32) Priority Date :03/01/2012
(33) Name of priority country :U.S.A.
(86) International Application No :PCT/IB2013/000001
Filing Date :03/01/2013
(87) International Publication No :WO 2013/102839
(61) Patent of Addition to Application Number :NA
Filing Date :NA
(62) Divisional to Application Number :NA
Filing Date :NA

(71)**Name of Applicant :**
1)TELEFONAKTIEBOLAGET LM ERICSSON (PUBL)
Address of Applicant :Torshamngatan 23 S 164 83 Stockholm Sweden
(72)**Name of Inventor :**
1)YU Ping
2)FANTAYE Girum Alebachew
3)CHEN Xixian
4)REN Hong

(57) Abstract :
Methods of performing link adaptation in a wireless communication system for simultaneous transmission of codewords include selecting initial modulation and coding scheme (MCS) levels for the codewords estimating a size ratio of the codewords determining a number of scheduling blocks (SB) for the codewords with the initial MCS levels and determining revised MCS levels for the codewords in response to the determined number of SBs. Transport block sizes are computed for the codewords and it is determined if there is a need to increase the number of scheduling blocks in at least one of the codewords. If there is a need to increase the number of scheduling blocks in a codeword scheduling blocks are added to the codeword and the transport block size for the codeword is recomputed. The codewords are then simultaneously transmitted over different multiple input multiple output (MIMO) communication channels using the same time and frequency resources.

No. of Pages : 66 No. of Claims : 23

(12) PATENT APPLICATION PUBLICATION
(19) INDIA
(22) Date of filing of Application :04/07/2014
(21) Application No.1411/KOLNP/2014 A
(43) Publication Date : 23/10/2015

(54) Title of the invention : APPLICATION OF FLUOXETINE TO TREATMENT OF DEPIGMENTATION DISEASES

(51) International classification :A61K31/138,A61P17/00
(31) Priority Document No :201110403173.4
(32) Priority Date :07/12/2011
(33) Name of priority country :China
(86) International Application No :PCT/CN2012/085929
Filing Date :05/12/2012
(87) International Publication No :WO 2013/083040
(61) Patent of Addition to Application Number :NA
Filing Date :NA
(62) Divisional to Application Number :NA
Filing Date :NA

(71)**Name of Applicant :**
1)CHINA PHARMACEUTICAL UNIVERSITY
Address of Applicant :No. 24 Tongjiaxiang Nanjing Jiangsu 210009 China
(72)**Name of Inventor :**
1)SHANG Jing
2)LIAO Sha
3)JIN Yu
4)TIAN Xiaoli
5)ZHAO Guorui
6)ZHOU Jia
7)WANG Qian
8)CHONG Silin

(57) Abstract :
Disclosed is an application of fluoxetine to treatment of depigmentation diseases and particularly to treatment of vitiligo and white hair.

No. of Pages : 23 No. of Claims : 3

(12) PATENT APPLICATION PUBLICATION
(19) INDIA
(22) Date of filing of Application :17/07/2014
(21) Application No.1511/KOLNP/2014 A
(43) Publication Date : 23/10/2015

(54) Title of the invention : DEVICE AND METHOD FOR MACHINING ANODE PLATE FOR ELECTROLYSIS

(51) International classification :B23C3/00,B23Q7/14,C25C1/12
(31) Priority Document No :201110441289.7
(32) Priority Date :26/12/2011
(33) Name of priority country :China
(86) International Application No :PCT/CN2012/083459
Filing Date :24/10/2012
(87) International Publication No :WO 2013/097527
(61) Patent of Addition to Application Number :NA
Filing Date :NA
(62) Divisional to Application Number :NA
Filing Date :NA

(71)**Name of Applicant :**
1)JIANGXI NERIN EQUIPMENT CO. LTD.
Address of Applicant :No. 1 Shuanggang Avenue Economic Technological Development Area Nanchang Jiangxi 330013 China
(72)**Name of Inventor :**
1)DENG Aimin
2)YU Zhiyan
3)SHAO Xiaoguang

(57) Abstract :
A device and method for machining anode plate for electrolysis comprising a transverse movement device (3) a panel shaping press and thickness measuring device (4) a bottom milling device (6) and a lateral milling device (5). The bottom milling device (6) is arranged on one side of the transverse movement device (3) and downstream the panel shaping press and thickness measuring device (4) in transverse direction. The lateral milling device (5) is arranged on the other side of the transverse movement device (3) and downstream the panel shaping press and thickness measuring device (4) in transverse direction. The lateral milling device (5) and bottom milling device (6) can be operated individually and the efficiency of anode plate machining is improved.

No. of Pages : 19 No. of Claims : 10

(12) PATENT APPLICATION PUBLICATION
(19) INDIA
(22) Date of filing of Application :17/07/2014
(21) Application No.1512/KOLNP/2014 A
(43) Publication Date : 23/10/2015

(54) Title of the invention : KNOTLESS SUTURE AND KIT CONTAINING SAME

(51) International classification :A61B17/04,A61L17/14,D02J3/00
(31) Priority Document No :1020110143929
(32) Priority Date :27/12/2011
(33) Name of priority country :Republic of Korea
(86) International Application No :PCT/KR2012/011361
Filing Date :24/12/2012
(87) International Publication No :WO 2013/100513
(61) Patent of Addition to Application Number :NA
Filing Date :NA
(62) Divisional to Application Number :NA
Filing Date :NA

(71)**Name of Applicant :**
1)JOHN JACOBS MEDICAL INC.
Address of Applicant :6F. Sanggyung Bldg. 241 7 Nonhyeon dong Gangnam gu Seoul 135 010 Republic of Korea
(72)**Name of Inventor :**
1)KIM Young Jae

(57) Abstract :
The present invention relates to a suture which is firmly maintained and fixed to an operational site to stably sustain suturing or lifting effects for a long time. More specifically the present invention provides a suture having a conic or pyramidal shape with a cut top wherein a suture support comprising a communication hole penetrating the both ends is provided at one end. The suture support can have one or more portions which are cut vertically from a lower end at a lower end portion having a larger diameter between the both ends or a part of a lower end can be removed so as to form one or more gaps formed from the end at a wall of the end portion.

No. of Pages : 30 No. of Claims : 24

(12) PATENT APPLICATION PUBLICATION
(19) INDIA
(22) Date of filing of Application :17/07/2014
(21) Application No.1513/KOLNP/2014 A
(43) Publication Date : 23/10/2015

(54) Title of the invention : FRACTIONAL FREQUENCY RE USE AND BEAMFORMING IN RELAY NODES OF A HETEROGENEOUS NETWORK

(51) International classification	:H04W16/26,H04W72/04,H04W84/04
(31) Priority Document No	:13/353926
(32) Priority Date	:19/01/2012
(33) Name of priority country	:U.S.A.
(86) International Application No	:PCT/IB2013/000059
Filing Date	:17/01/2013
(87) International Publication No	:WO 2013/108116
(61) Patent of Addition to Application Number	:NA
Filing Date	:NA
(62) Divisional to Application Number	:NA
Filing Date	:NA

(71)**Name of Applicant :**
1)TELEFONAKTIEBOLAGET LM ERICSSON (PUBL)
Address of Applicant :Torshamngatan 23 S 164 83 Stockholm Sweden
(72)**Name of Inventor :**
1)BOUDREAU Gary
2)DIMOU Konstantinos

(57) Abstract :
Methods of operating a base station serving a cell in a heterogeneous network and at least one relay node serving a subcell of the cell in which a user equipment unit connects to the network via the base station or the relay node are provided. The methods include receiving uplink access (Uu) signals at the relay node from the user equipment unit in a first frequency range and transmitting uplink backhaul (Un) signals from the relay node to the base station in a second frequency range that is different from the first frequency range.

No. of Pages : 41 No. of Claims : 25

(12) PATENT APPLICATION PUBLICATION
(21) Application No.1585/KOLNP/2014 A
(19) INDIA
(22) Date of filing of Application :28/07/2014
(43) Publication Date : 23/10/2015

(54) Title of the invention : NETWORK ELEMENT STATE PROCESSING METHOD AND DEVICE

(51) International classification :H04W52/02
(31) Priority Document No :201210019190.2
(32) Priority Date :20/01/2012
(33) Name of priority country :China
(86) International Application No :PCT/CN2013/070596
Filing Date :17/01/2013
(87) International Publication No :WO 2013/107360
(61) Patent of Addition to Application Number :NA
Filing Date :NA
(62) Divisional to Application Number :NA
Filing Date :NA

(71)**Name of Applicant :**
1)HUAWEI TECHNOLOGIES CO. LTD.
Address of Applicant :Huawei Administration Building Bantian Longgang Shenzhen Guangdong 518129 China
(72)**Name of Inventor :**
1)ZHAO Dong

(57) Abstract :
Disclosed are a network element state processing method and device. The method comprises: obtaining a network element by monitoring network element performance data or accepting an operation request the network element being a base station or a cell or a subnetwork and obtaining target data corresponding to the network element the target data comprising at least one of trace data minimized manual drive test data wireless link failure data user equipment error report alarm data and performance data; then judging whether the network element has failed in accordance with the target data or needs to compensate for other network elements; and finally indicating whether the network element can enter an energy saving state when the network element has failed or needs to compensate other network elements. The present invention is applied to the field of communication systems.

No. of Pages : 33 No. of Claims : 40

(12) PATENT APPLICATION PUBLICATION
(21) Application No.1586/KOLNP/2014 A
(19) INDIA
(22) Date of filing of Application :28/07/2014
(43) Publication Date : 23/10/2015

(54) Title of the invention : MEDICAMENT CONTAINING TARAXACUM PLANT ROOT EXTRACT FOR TREATMENT OR PREVENTION OF CANCER AND METHOD FOR PREPARING SAME

(51) International classification :A61K36/288,A61P35/00
(31) Priority Document No :61/597453
(32) Priority Date :10/02/2012
(33) Name of priority country :U.S.A.
(86) International Application No :PCT/CA2013/000114
Filing Date :08/02/2013
(87) International Publication No :WO 2013/116936
(61) Patent of Addition to Application Number :NA
Filing Date :NA
(62) Divisional to Application Number :NA
Filing Date :NA

(71)**Name of Applicant :**
1)UNIVERSITY OF WINDSOR
Address of Applicant :401 Sunset Avenue Windsor Ontario N9B 3P4 Canada
(72)**Name of Inventor :**
1)PANDEY Siyaram
2)HAMM Caroline Marie
3)OVADJE Pamela Uzuazo

(57) Abstract :
TaraxacumTaraxacumThe present invention relates to an improved method for preparing a medicament comprising a plant root extract for the treatment or prevention of a cancer. In one aspect the method comprises freezing plant root to obtain a frozen root stock said freezing step being selected to effect at least partial disruption of one or more root cells; dry grinding the frozen root stock to obtain a ground root powder wherein during said dry grinding step the frozen root stock is maintained at a grinding temperature below about 40°C; steeping the ground root powder with a solvent to obtain a suspension having a liquid extract portion and a solid particle portion; and separating the liquid extract portion from the solid particle portion to provide a separated liquid extract for use in the medicament.

No. of Pages : 74 No. of Claims : 41

(12) PATENT APPLICATION PUBLICATION
(21) Application No.1587/KOLNP/2014 A
(19) INDIA
(22) Date of filing of Application :28/07/2014
(43) Publication Date : 23/10/2015

(54) Title of the invention : DOWN CONVERSION CIRCUIT WITH INTERFERENCE DETECTION

(51) International classification :H04B1/10,H04B1/28,H03D7/18
(31) Priority Document No :12153827.6
(32) Priority Date :03/02/2012
(33) Name of priority country :EPO
(86) International Application No :PCT/EP2013/051254
Filing Date :23/01/2013
(87) International Publication No :WO 2013/113599
(61) Patent of Addition to Application Number :NA
Filing Date :NA
(62) Divisional to Application Number :NA
Filing Date :NA

(71)**Name of Applicant :**
1)TELEFONAKTIEBOLAGET L M ERICSSON (PUBL)
Address of Applicant :SE 164 83 Stockholm Sweden
(72)**Name of Inventor :**
1)DIN Imad Ud
2)ANDERSSON Stefan
3)SJÖLAND Henrik
4)WERNEHAG Johan
5)TILLMAN Fredrik

(57) Abstract :
A down conversion circuit (30) for a receiver circuit (10) is disclosed. It comprises a first mixer (70) arranged to down convert an RF signal with a first LO signal (LO1) thereby generating a first down converted signal. It further comprises a second mixer (80) arranged to down convert the RF signal with a second LO signal (LO2) having the same LO frequency as the first LO signal (LO1) but a different and a second duty cycle thereby generating a second down converted signal. The second mixer (80) has an enabled and a disabled mode. The down conversion circuit (30) also comprises a third mixer (140) arranged to down convert the RF signal with the second LO signal (LO2) thereby generating a third down converted signal. A passive output combiner network is used to combine the first and the second down converted signals such that harmonically down converted signal content present in the first down converted signal and harmonically down converted signal content present in the second down converted signal cancel in a combined output signal of the down conversion circuit. The down conversion circuit further comprises a detection unit (150) adapted to detect interference based on the first and third down converted signals and to selectively set the second passive switching mixer (80) in the enabled mode for counteracting the interference or in the disabled mode for saving power compared with the enabled mode based on the detection. A corresponding receiver circuit a corresponding communication device and a corresponding method are also disclosed.

No. of Pages : 27 No. of Claims : 16

(12) PATENT APPLICATION PUBLICATION
(19) INDIA
(22) Date of filing of Application :01/07/2014
(21) Application No.1390/KOLNP/2014 A
(43) Publication Date : 23/10/2015

(54) Title of the invention : PARTING AND GROOVING TOOL WITH CLAMPING ARRANGEMENTS

(51) International classification :B23B29/04
(31) Priority Document No :12151086.1
(32) Priority Date :13/01/2012
(33) Name of priority country :EPO
(86) International Application No :PCT/EP2013/050231
Filing Date :08/01/2013
(87) International Publication No :WO 2013/104630
(61) Patent of Addition to Application Number :NA
Filing Date :NA
(62) Divisional to Application Number :NA
Filing Date :NA

(71)**Name of Applicant :**
1)SECO TOOLS AB
Address of Applicant :SE 737 82 Fagersta Sweden
(72)**Name of Inventor :**
1)GUSTAVSSON Björn

(57) Abstract :
A parting and grooving tool comprising a toolholder (21) and a cutting insert (31) the toolholder comprising a toolholder body (23) including a main body portion (25) and an elastic clamping arm (27) the main body portion (25) and the clamping arm (27) defining an insert receiving pocket (29) the pocket (29) having a top surface (33) formed by the clamping arm (27) and a bottom surface formed by the main body portion (25) for contacting a top and a bottom surface of a cutting insert (31). The toolholder body (23) comprises a second arm (43) the second arm (43) and the clamping arm (27) defining a slot (45) a threaded hole (47) extending through the second arm (43) to the slot (45) the toolholder (21) comprising a screw (49) having threads that mate with threads in the threaded hole (47) so that the clamping arm (27) is movable into and out of contact with the top surface (37) of the insert. An axis (AT) of the threaded hole (47) is substantially perpendicular to a longitudinal axis (AP) of the insert receiving pocket (29). An axis (AT) of the threaded hole (47) intersects the cutting insert (31). A parting and grooving tool is also disclosed.

No. of Pages : 14 No. of Claims : 13

(12) PATENT APPLICATION PUBLICATION
(19) INDIA
(22) Date of filing of Application :02/07/2014
(21) Application No.1391/KOLNP/2014 A
(43) Publication Date : 23/10/2015

(54) Title of the invention : PHARMACEUTICAL COMPOSITIONS OF SODIUM ION AND CALCIUM ION AND METHODS FOR TREATING CANCER TUMOR AND NON MALIGNANCY

(51) International classification :A61K33/00,A61K33/06,A61P35/00
(31) Priority Document No :61/566655
(32) Priority Date :04/12/2011
(33) Name of priority country :U.S.A.
(86) International Application No :PCT/US2012/067802
Filing Date :04/12/2012
(87) International Publication No :WO 2013/133873
(61) Patent of Addition to Application Number :NA
Filing Date :NA
(62) Divisional to Application Number :NA
Filing Date :NA

(71)**Name of Applicant :**
1)LIU David L.
Address of Applicant :242 Dorchester Street South Boston MA 02127 U.S.A.
(72)**Name of Inventor :**
1)LIU David L.

(57) Abstract :
The invention relates to a unique formulated pharmaceutical composition and a novel treatment method of intratumoral injection. The pharmaceutical composition of the invention is the saturated ionic solution of sodium ions and calcium ions (the medicinal ion bomb). The invention of intratumoral injection with the medicinal ion bomb can be used as the first line treatment in treating cancer and tumor in nine human organs (carcinoma and tumor of the skin and subcutaneous tissue breast prostate thyroid lung liver genital organ brain and pancreas) and certain other benign diseases (skin and subcutaneous neoplasm breast fibrocystic change benign prostatic hyperplasia and thyroid nodules).

No. of Pages : 61 No. of Claims : 40

(12) PATENT APPLICATION PUBLICATION
(21) Application No.1590/KOLNP/2014 A
(19) INDIA
(22) Date of filing of Application :28/07/2014
(43) Publication Date : 23/10/2015

(54) Title of the invention : A COVER DEVICE FOR A DRAINAGE APPARATUS FOR A PAPERMAKING MACHINE

(51) International classification :D21F1/66
(31) Priority Document No :61/632782
(32) Priority Date :30/01/2012
(33) Name of priority country :U.S.A.
(86) International Application No :PCT/US2013/023935
Filing Date :30/01/2013
(87) International Publication No :WO 2013/116397
(61) Patent of Addition to Application Number :NA
Filing Date :NA
(62) Divisional to Application Number :NA
Filing Date :NA

(71)**Name of Applicant :**
1)PAPERCHINE INC.
Address of Applicant :1155 Prairie Hill Rd. Rockton IL 61072 U.S.A.
(72)**Name of Inventor :**
1)MCPHERSON Douglas

(57) Abstract :
A cover device (10) is disclosed for use in a dewatering shoe or other drainage device of a papermaking machine. The cover device (10) includes a plate (12) of expanded metal which defines a plurality of elongate holes (14 15 16 17 18 19 20 and 21) for the passage therethrough of water as indicated by the arrow (22) removed from a web W disposed on a dewatering screen (24) moving in a machine direction MD relative to the cover device (10). The arrangement is such that the dewatering screen (24) is disposed between the web W and the cover device (10) so that the water (22) is removed from the web W through the dewatering screen (24) and then through the elongate holes (14 to 21).

No. of Pages : 27 No. of Claims : 12

(12) PATENT APPLICATION PUBLICATION
(21) Application No.1591/KOLNP/2014 A
(19) INDIA
(22) Date of filing of Application :29/07/2014
(43) Publication Date : 23/10/2015

(54) Title of the invention : A CELL AND A TRAY FOR PLANT PROPAGATION

(51) International classification :A01G9/10,A01G9/02
(31) Priority Document No :NA
(32) Priority Date :NA
(33) Name of priority country :NA
(86) International Application No :PCT/SE2012/050103
Filing Date :02/02/2012
(87) International Publication No :WO 2013/115689
(61) Patent of Addition to Application Number :NA
Filing Date :NA
(62) Divisional to Application Number :NA
Filing Date :NA

(71)**Name of Applicant :**
1)BJÖRKEMAR CONSTRUCTION & CONSULTING BCC AB
Address of Applicant :Profilgatan 15 SE 261 35 Landskrona Sweden
(72)**Name of Inventor :**
1)BJÖRKEMAR Hans
2)PERSSON Tobias

(57) Abstract :
A cell (1) for a seedling tray has a tubular body (2) with cell sides (3 6) forming an open upper end (7) and an at least partly open lower end (8) and cell corner portions (9 12) between each of said cell sides whereby inwardly facing channels (13 16) extend along said cell sides from the upper end and to the lower end of the cell and are provided at least mainly outside a main plane (P3 P6) of the respective cell side. Trays for such cells are also provided.

No. of Pages : 20 No. of Claims : 11

(12) PATENT APPLICATION PUBLICATION
(19) INDIA
(22) Date of filing of Application :03/07/2014
(21) Application No.1407/KOLNP/2014 A
(43) Publication Date : 23/10/2015

(54) Title of the invention : FLUID COOLED BATTERY MODULE CONTAINING BATTERY CELLS

(51) International classification :H01M2/00,H01M10/50,H01M2/02
(31) Priority Document No :61/631455
(32) Priority Date :05/01/2012
(33) Name of priority country :U.S.A.
(86) International Application No :PCT/CA2013/000005
Filing Date :07/01/2013
(87) International Publication No :WO 2013/102268
(61) Patent of Addition to Application Number :NA
Filing Date :NA
(62) Divisional to Application Number :NA
Filing Date :NA

(71)**Name of Applicant :**
1)ELECTROVAYA INC.
Address of Applicant :2645 Royal Windsor Drive Mississauga ON L5J 1K9 Canada
(72)**Name of Inventor :**
1)BHOLA Rakesh
2)DAS GUPTA Rajshekar

(57) Abstract :
A battery module for receiving battery cells provides cooling through a cooling fluid. Chilled fluid travels first to the hottest part of the battery module and then continues to gradually less hot areas. As the chilled cooling fluid absorbs heat and travels to cooler parts of the battery module the heat transfer between the fluid and the battery cells decreases because the temperature differential between the cells and cooling fluid decreases providing a more even temperature distribution across the battery module. The cooling fluid may be contained in a conduit associated with one or more cooling plates. A plurality of slots provide a precise mechanical support for each battery cell increasing the heat conduction from the cell to the battery module protecting the battery module from vibration and decreasing contamination in case of thermal runaway or other damage to the cells.

No. of Pages : 26 No. of Claims : 23

(12) PATENT APPLICATION PUBLICATION
(21) Application No.1408/KOLNP/2014 A
(19) INDIA
(22) Date of filing of Application :03/07/2014
(43) Publication Date : 23/10/2015

(54) Title of the invention : THIN FILM ELECTROCHEMICAL CELL WITH A POLYMER DOUBLE SEAL

(51) International classification :H01M2/02,H01M2/08
(31) Priority Document No :61/631453
(32) Priority Date :05/01/2012
(33) Name of priority country :U.S.A.
(86) International Application No :PCT/CA2013/000006
Filing Date :07/01/2013
(87) International Publication No :WO 2013/102269
(61) Patent of Addition to Application Number :NA
Filing Date :NA
(62) Divisional to Application Number :NA
Filing Date :NA

(71)**Name of Applicant :**
1)ELECTROVAYA INC.
Address of Applicant :2645 Royal Windsor Drive Mississauga Ontario L5J 1K9 Canada
(72)**Name of Inventor :**
1)BHOLA Rakesh
2)DAS GUPTA Rajshekar
3)DAS GUPTA Sankar

(57) Abstract :
A double sealed thin film electrochemical pouch cell comprising a cathode current collector a cathode an electrolyte an anode and an anode current collector which is double sealed by a first inner laminate layer forming a primary seal covered by a second outer polymer layer forming a secondary seal The second outer polymer layer comprises embedded particles to increase the thermal conductivity of the second outer polymer layer.

No. of Pages : 29 No. of Claims : 33

(12) PATENT APPLICATION PUBLICATION
(21) Application No.1409/KOLNP/2014 A
(19) INDIA
(22) Date of filing of Application :03/07/2014
(43) Publication Date : 23/10/2015

(54) Title of the invention : IN VITRO CELL COLONY CULTIVATION DEVICE AND USE THEREOF

(51) International classification :C12M3/00,C12N5/00
(31) Priority Document No :201110403987.8
(32) Priority Date :07/12/2011
(33) Name of priority country :China
(86) International Application No :PCT/CN2012/086149
Filing Date :07/12/2012
(87) International Publication No :WO 2013/083073
(61) Patent of Addition to Application Number :NA
Filing Date :NA
(62) Divisional to Application Number :NA
Filing Date :NA

(71)**Name of Applicant :**
1)TSINGHUA UNIVERSITY
Address of Applicant :Qinghuayuan Haidian District Beijing 100084 China
(72)**Name of Inventor :**
1)DU Yanan
2)YAO Rui
3)WANG Jingyu

(57) Abstract :
Provided are an in vitro cell colony cultivation device and use thereof the in vitro cell colony cultivation device comprising: a micro patterned template having a micro pattern cavity and adhesive hydrogel formed on the lower surface of the micro patterned template the micro pattern cavity defining the growth space of the cell colony. An upper template can be retained or removed as required to form a monolayer cell micro pattern or a multilayer cell micro cluster.

No. of Pages : 52 No. of Claims : 28

(12) PATENT APPLICATION PUBLICATION
(21) Application No.1594/KOLNP/2014 A
(19) INDIA
(22) Date of filing of Application :29/07/2014
(43) Publication Date : 23/10/2015

(54) Title of the invention : AN EFFICIENT CONTINUOUS PROCESS FOR MANUFACTURING OF 4 AMINODIPHENYLAMINE FROM ANILINE AND NITROBENZENE

(51) International classification :C07C209/60
(31) Priority Document No :NA
(32) Priority Date :NA
(33) Name of priority country :NA
(86) International Application No :PCT/IB2012/051829
Filing Date :13/04/2012
(87) International Publication No :WO 2013/153419
(61) Patent of Addition to Application Number :NA
Filing Date :NA
(62) Divisional to Application Number :NA
Filing Date :NA

(71)**Name of Applicant :**
1)NOCIL LIMITED
Address of Applicant :Mafatlal House H.T. Parekh Marg Backbay Reclamation Churchgate Mumbai 400 020 Maharashtra India
(72)**Name of Inventor :**
1)NANDI Chinmoy
2)GANGAL Narendra
3)PUROHIT Pramod
4)KETKAR Vinay
5)RAO Prahlad

(57) Abstract :
An efficient continuous manufacturing process for 4 aminodiphenylamine by coupling aniline with nitrobenzene in the presence of tetramethylammonium hydroxide (TMAH) as a base using flow reactors wherein base decomposition is considerably reduced by optimizing base quantity process conditions and process equipment. Accordingly in brief summary one embodiment of the present invention is a process which comprises one or more of the steps of reacting aniline and nitrobenzene in the presence of water and TMAH as a base in a continuous manner by feeding the reactants to a series of continuous flow reactors while continuously distilling off an aniline water mixture under reduced pressure such that the water to total base molar ratio is less than 0.6:1 at the flow reactors outlet and the water to unbound TMAH molar ratio is about 4: 1 in the reaction product.

No. of Pages : 35 No. of Claims : 23

(12) PATENT APPLICATION PUBLICATION
(19) INDIA
(22) Date of filing of Application :29/07/2014
(21) Application No.1595/KOLNP/2014 A
(43) Publication Date : 23/10/2015

(54) Title of the invention : TURBOCHARGER HAVING A CONNECTOR FOR CONNECTING AN IMPELLER TO A SHAFT

(51) International classification :F01D5/02,F04D29/26,F16D1/08
(31) Priority Document No :1200403.2
(32) Priority Date :10/01/2012
(33) Name of priority country :U.K.
(86) International Application No :PCT/GB2012/053082
Filing Date :11/12/2012
(87) International Publication No:WO 2013/104880
(61) Patent of Addition to Application Number :NA
Filing Date :NA
(62) Divisional to Application Number :NA
Filing Date :NA

(71)**Name of Applicant :**
1)NAPIER TURBOCHARGERS LIMITED
Address of Applicant :PO Box 1 Ruston House Waterside South Lincoln Lincolnshire LN5 7FD U.K.
(72)**Name of Inventor :**
1)PINKNEY Ian
2)OKHUAHESOGIE Osarobo Famous
3)ROACH Paul Eifion
4)THOMAS Neil Ryan
5)BROWN Ian Patrick Clare
6)KAY Peter
7)WILSON Stephen
8)SMITH David Leslie
9)GEORGE Robert Neil
10)JACKLIN Paul Leslie
11)NGAO Geoff Kinpoy
12)MUSSON Kevin John
13)MOORE Matthew Elijah
14)CLARE Jamie
15)MURRAY Thomas Jarlath
16)POTTER Stuart Michael
17)MONAGHAN Christopher John
18)TAYLOR Alan Martin
19)HEYES Francis Joseph Geoffrey
20)KNIGHTON Trevor

(57) Abstract :
A turbocharger is provided having a connector (3) for connecting an impeller (1) to a shaft (2). The impeller has a shaft side hub extension (H) with a central recess. The impeller is formed of a material having a greater coefficient of thermal expansion than the material of the shaft. The connector is inserted into the recess to frictionally connect an outwardly facing surface (14) of the connector with a radially inner surface of the hub extension. The connector has a threaded portion (11) carrying a thread which screws onto a corresponding threaded portion (7) of the shaft such that the connector provides a rotationally fixed connection between the impeller and the shaft. The connector is formed of a material having a coefficient of thermal expansion which is greater than the coefficient of thermal expansion of the material of the shaft.

No. of Pages : 17 No. of Claims : 13

(12) PATENT APPLICATION PUBLICATION
(19) INDIA
(22) Date of filing of Application :17/07/2014
(21) Application No.1514/KOLNP/2014 A
(43) Publication Date : 23/10/2015

(54) Title of the invention : METHOD FOR PRODUCING PUDDING

(51) International classification :A23L1/187
(31) Priority Document No :2011287708
(32) Priority Date :28/12/2011
(33) Name of priority country :Japan
(86) International Application No :PCT/JP2012/083409
Filing Date :25/12/2012
(87) International Publication No :WO 2013/099838
(61) Patent of Addition to Application Number :NA
Filing Date :NA
(62) Divisional to Application Number :NA
Filing Date :NA

(71)**Name of Applicant :**
1)MEIJI CO. LTD.
Address of Applicant :2 10 Shinsuna 1 chome Koto ku Tokyo 1368908 Japan
(72)**Name of Inventor :**
1)NARAHARA Yoshiharu
2)INABA Atsuko
3)KISHI Mariko

(57) Abstract :
The present invention addresses the problem of providing a pudding which has a higher meltability in mouth than the conventional puddings. A method for producing a pudding according to the present invention comprises a preparative step and a homogenization step. In the preparative step a starting material solution is prepared. In the homogenization step the starting material solution is homogenized so as to give a median diameter of a dispersoid in the starting material solution of 1.0 6.0 μm inclusive and a standard deviation of the median diameter of the dispersoid of not more than 0.30. In this step it is preferred that the homogenization pressure is within the range of 1 15 MPa inclusive.

No. of Pages : 34 No. of Claims : 7

(12) PATENT APPLICATION PUBLICATION
(21) Application No.1515/KOLNP/2014 A
(19) INDIA
(22) Date of filing of Application :17/07/2014
(43) Publication Date : 23/10/2015

(54) Title of the invention : ADJUSTING LASER ENERGY IN ACCORDACE WITH OPTICAL DENSITY

(51) International classification :A61F9/008
(31) Priority Document No :NA
(32) Priority Date :NA
(33) Name of priority country :NA
(86) International Application No :PCT/EP2012/000224
Filing Date :18/01/2012
(87) International Publication No :WO 2013/107468
(61) Patent of Addition to Application Number :NA
Filing Date :NA
(62) Divisional to Application Number :NA
Filing Date :NA

(71)**Name of Applicant :**
1)WAVELIGHT GMBH
Address of Applicant :Am Wolfsmantel 5 91058 Erlangen Germany
(72)**Name of Inventor :**
1)LEMONIS Sissimos
2)WENDL Stefan

(57) Abstract :
In certain embodiments a device comprises a laser device and a control computer. The laser device directs a laser beam with laser energy through an outer portion of an eye to a target portion of the eye. The control computer receives an optical density measurement of the outer portion determines the laser energy according to the optical density measurement and instructs the laser device to direct the laser beam with the laser energy through the outer portion of the eye to the target portion of the eye.

No. of Pages : 28 No. of Claims : 36

(12) PATENT APPLICATION PUBLICATION
(19) INDIA
(22) Date of filing of Application :17/07/2014
(21) Application No.1516/KOLNP/2014 A
(43) Publication Date : 23/10/2015

(54) Title of the invention : COMPOSITIONS COMPRISING C5 AND C6 OLIGOSACCHARIDES

(51) International classification :C07H3/06,C07H3/02,C07H1/08
(31) Priority Document No :61/581890
(32) Priority Date :30/12/2011
(33) Name of priority country :U.S.A.
(86) International Application No:PCT/US2012/067644
Filing Date :03/12/2012
(87) International Publication No :WO 2013/101403
(61) Patent of Addition to Application Number :NA
Filing Date :NA
(62) Divisional to Application Number :NA
Filing Date :NA

(71)**Name of Applicant :**
1)RENMATIX INC.
Address of Applicant :660 Allendale Road King of Prussia Pennsylvania 19406 U.S.A.
(72)**Name of Inventor :**
1)FLOYD Daniel Clay
2)KADAM Kiran L.
3)KILAMBI Srinivas

(57) Abstract :
Compositions comprising C5 and C6 saccharides of varying degrees of polymerization and low levels of undesirable impurities such as compounds containing sulfur nitrogen or metals are disclosed.

No. of Pages : 51 No. of Claims : 41

(12) PATENT APPLICATION PUBLICATION
(21) Application No.1517/KOLNP/2014 A
(19) INDIA
(22) Date of filing of Application :17/07/2014
(43) Publication Date : 23/10/2015

(54) Title of the invention : COMPOSITIONS COMPRISING C5 AND C6 MONOSACCHARIDES

(51) International classification :C07H3/02,C07H1/08
(31) Priority Document No :61/581922
(32) Priority Date :30/12/2011
(33) Name of priority country :U.S.A.
(86) International Application No :PCT/US2012/067538
Filing Date :03/12/2012
(87) International Publication No :WO 2013/101399
(61) Patent of Addition to Application Number :NA
Filing Date :NA
(62) Divisional to Application Number :NA
Filing Date :NA

(71)**Name of Applicant :**
1)RENMATIX INC.
Address of Applicant :660 Allendale Road King of Prussia Pennsylvania 19406 U.S.A.
(72)**Name of Inventor :**
1)FLOYD Daniel Clay
2)KADAM Kiran
3)KILAMBI Srinivas

(57) Abstract :
Compositions comprising C5 and C6 monosaccharides and low levels of undesirable impurities such as compounds containing sulfur nitrogen or metals are disclosed.

No. of Pages : 29 No. of Claims : 25

(12) PATENT APPLICATION PUBLICATION
(19) INDIA
(22) Date of filing of Application :31/07/2014
(21) Application No.1610/KOLNP/2014 A
(43) Publication Date : 23/10/2015

(54) Title of the invention : DUAL CIRCULATION DRILLING SYSTEM

(51) International classification :E21B21/12,E21B17/18,E21B7/18
(31) Priority Document No :2012900235
(32) Priority Date :20/01/2012
(33) Name of priority country :Australia
(86) International Application No :PCT/AU2013/000044
Filing Date :21/01/2013
(87) International Publication No :WO 2013/106890
(61) Patent of Addition to Application Number :NA
Filing Date :NA
(62) Divisional to Application Number :NA
Filing Date :NA

(71)**Name of Applicant :**
1)SPEER Ian
Address of Applicant :26 Lascelles Parade Gooseberry Hill WA 6076 Australia
2)STRANGE Warren
(72)**Name of Inventor :**
1)SPEER Ian
2)STRANGE Warren

(57) Abstract :
A ground drill system (10) has a drill string 14 which forms first and second mutually isolated fluid paths (16 and 18) respectively. The drill string (14) has an up hole end (20) coupled to a dual circulation rotation head (22) and a down hole end (24) which is coupled to a drilling tool (12). The drilling tool (12) is operated by the flow of fluid delivered through the first flow path (16). A second fluid outlet (26) is provided intermediate the up hole end (20) and the drilling tool (12). The outlet (26) is in fluid communication with the second fluid flow path (18) and located a constant or fixed distance from the drilling toll (2). The second fluid outlet (26) discharges a flushing fluid flowing through the flushing flow path (18) into a hole being drilled by the drilling system (10). The rotation head (22) provides torque to the drill string (14) and thus the drilling tool (12).

No. of Pages : 26 No. of Claims : 36

(12) PATENT APPLICATION PUBLICATION
(21) Application No.1613/KOLNP/2014 A
(19) INDIA
(22) Date of filing of Application :01/08/2014
(43) Publication Date : 23/10/2015

(54) Title of the invention : HIGH-STRENGTH HOT-DIP GALVANIZED STEEL SHEET AND METHOD FOR PRODUCING SAME

(51) International classification :C23C2/06,C21D9/46
(31) Priority Document No :2012-046472
(32) Priority Date :02/03/2012
(33) Name of priority country :Japan
(86) International Application No :PCT/JP2013/001038
Filing Date :25/02/2013
(87) International Publication No :WO 2013/128867
(61) Patent of Addition to Application Number :NA
Filing Date :NA
(62) Divisional to Application Number :NA
Filing Date :NA

(71)**Name of Applicant :**
1)JFE STEEL CORPORATION
Address of Applicant :2-3, UCHISAIWAI-CHO 2-CHOME, CHIYODA-KU, TOKYO 100-0011, JAPAN
(72)**Name of Inventor :**
1)HARAKO, DAISUKE
2)SUZUKI, YOSHITSUGU
3)NAGATAKI, YASUNOBU

(57) Abstract :
An object of the present invention is to provide a high strength galvanized steel sheet excellent in terms of formability, coating adhesiveness in a portion subjected to bending forming, corrosion resistance in a portion subjected to stretch flange forming and surface appearance. The steel sheet has a chemical composition comprising, C: 0.02% or more and 0.30% or less, Si: 0.01% or more and 2.5% or less, Mn: 0.1% or more and 3.0% or less, P: 0.003% or more and 0.08% or less, S: 0.01% or less, Al: 0.001% or more and 0.20% or less, Ti: 0.03% or more and 0.40% or less and the balance being Fe and inevitable impurities, and a zinc- coated layer on both surfaces of the base steel sheet having a coating weight per surface of 20 g/m2 or more and 120 g/m2 or less. The concentration ratio of C to Ti (C/Ti) in a portion within 10 μm from the surface of the base steel sheet immediately under the zinc-coated layer is, in terms of atomic ratio, 0.8 or more and 1.5 or less, and the total amount of oxides of one or more selected from Fe, Si, Mn, P, Al and Ti formed in a surface portion within 100 μm from the surface of the base steel sheet immediately under the zinc- coated layer is, in terms of oxygen amount, 0.05 g/m2 or less per surface.

No. of Pages : 41 No. of Claims : 7

(12) PATENT APPLICATION PUBLICATION
(21) Application No.1429/KOLNP/2014 A
(19) INDIA
(22) Date of filing of Application :07/07/2014
(43) Publication Date : 23/10/2015

(54) Title of the invention : METHODS AND APPARATUS FOR SHORT MESSAGE SERVICE OVER A PACKET SWITCHED DOMAIN

(51) International classification :H04W8/06
(31) Priority Document No :61/568892
(32) Priority Date :09/12/2011
(33) Name of priority country :U.S.A.
(86) International Application No :PCT/EP2012/074843
Filing Date :07/12/2012
(87) International Publication No :WO 2013/083803
(61) Patent of Addition to Application Number :NA
Filing Date :NA
(62) Divisional to Application Number :NA
Filing Date :NA

(71)**Name of Applicant :**
1)TELEFONAKTIEBOLAGET L M ERICSSON (publ)
Address of Applicant :SE 164 83 Stockholm Sweden
(72)**Name of Inventor :**
1)HEDMAN Peter
2)RÖNNEKE Hans
3)KARLSSON Magnus
4)OLSSON Magnus

(57) Abstract :
A wireless communication device can provide an indication that its registration in a circuit switched domain of a network is intended only for a short message service that is included in or accompanies a registration request such as a combined registration for both the CS domain and a packet switched (PS) domain. The device can also change a conventional order of its domain registrations e.g. by performing a PS domain registration before a CS domain registration when it will send SMS messages over the PS domain. The device can indicate its intention to use or support for SMS over the PS domain and/or be informed about network support for SMS over the PS domain before the UE attempts a network registration.

No. of Pages : 28 No. of Claims : 32

(12) PATENT APPLICATION PUBLICATION
(19) INDIA
(22) Date of filing of Application :18/07/2014
(21) Application No.1526/KOLNP/2014 A
(43) Publication Date : 23/10/2015

(54) Title of the invention : A METHOD AND SYSTEM FOR ESTIMATING MOMENTARY CARDIOVASCULAR PERFORMANCE RESERVE

(51) International classification :A61B5/026,A61B5/0245
(31) Priority Document No :218088
(32) Priority Date :13/02/2012
(33) Name of priority country :Israel
(86) International Application No :PCT/IL2013/050090
Filing Date :31/01/2013
(87) International Publication No :WO 2013/121414
(61) Patent of Addition to Application Number :NA
Filing Date :NA
(62) Divisional to Application Number :NA
Filing Date :NA

(71)**Name of Applicant :**
1)CARDIO SCALE LTD.
Address of Applicant :45 Yam Hamelach Street 55900 Ganey Tikva Israel
(72)**Name of Inventor :**
1)GABBAY Uri
2)BOBROVSKY Ben Zion

(57) Abstract :
The invention relates to a method for determining a cardiovascular performance reserve for each individual patient comprising the steps of: a) receiving input physiological data from the patient for obtaining a parameter Z which is or approximates the product of the Stroke Volume (SV) by the Systemic Vascular Resistance (SVR); b) providing a value representing the Respiratory Rate (RR) of said patient wherein the Respiratory Rate (RR) value is provided by measurements using dedicated device(s) calculations from the input physiological data or manually by using best estimate; c) providing anthropometric data of said patient for calculating the Body Surface Area (BSA) of said individual wherein the anthropometric data includes at least body dimensions (such as height and weight) of said patient; d) calculating the Cardiovascular Reserve (CVR) by using said Z parameter and said RR according to following formula: CVR = (Z/RR); e) calculating a Cardiovascular Reserve Index (CVRI) by standardizing said CVR (by said BSA) and normalizing it to a scale of 1 according to the following formula: CVRI = CVR/(BSA4); and outputting said Cardiovascular Reserve Index.

No. of Pages : 54 No. of Claims : 14

(12) PATENT APPLICATION PUBLICATION
(19) INDIA
(22) Date of filing of Application :18/07/2014
(21) Application No.1527/KOLNP/2014 A
(43) Publication Date : 23/10/2015

(54) Title of the invention : UNESTABLISHED COMMUNICATION LINKS IN COMMUNICATION SYSTEMS

(51) International classification :H04M3/436,H04M3/42,H04W4/16
(31) Priority Document No :NA
(32) Priority Date :NA
(33) Name of priority country :NA
(86) International Application No :PCT/EP2011/074156
Filing Date :28/12/2011
(87) International Publication No :WO 2013/097893
(61) Patent of Addition to Application Number :NA
Filing Date :NA
(62) Divisional to Application Number :NA
Filing Date :NA

(71)**Name of Applicant :**
1)OPTIS WIRELESS TECHNOLOGY LLC
Address of Applicant :P.O. Box 250649 Plano TX 75025 U.S.A.
(72)**Name of Inventor :**
1)MUKHERJEE Subrata

(57) Abstract :
A switching entity in a communication system configured to obtain characteristics of a terminal submitting a request to establish a communication link in the communication system and to start to establish the communication link while preventing a feedback signal from reaching the terminal based on the obtained characteristics.

No. of Pages : 27 No. of Claims : 24

(12) PATENT APPLICATION PUBLICATION
(19) INDIA
(22) Date of filing of Application :18/07/2014
(21) Application No.1528/KOLNP/2014 A
(43) Publication Date : 23/10/2015

(54) Title of the invention : TROLLEY FOR A MILKING APPARATUS

(51) International classification :B62B1/26,B62B1/22,B62B5/06
(31) Priority Document No :TO2012A000041
(32) Priority Date :20/01/2012
(33) Name of priority country :Italy
(86) International Application No :PCT/IB2012/056975
Filing Date :05/12/2012
(87) International Publication No :WO 2013/108095
(61) Patent of Addition to Application Number :NA
Filing Date :NA
(62) Divisional to Application Number :NA
Filing Date :NA

(71)**Name of Applicant :**
1)INTERPULS S.P.A.
Address of Applicant :Via F. Maritano 11 I 42020 Albinea (RE) Italy
(72)**Name of Inventor :**
1)SICURI Roberto
2)NICOLINI Gabriele

(57) Abstract :
Trolley (11) for a milking apparatus (17) said trolley comprising a supporting structure (13) provided with wheels (15) and capable of carrying a milking apparatus (17) and a handle (19; 119) for allowing the trolley to be transported by a user wherein the supporting structure (13) comprises at least two sections (21a 21b 21c) firmly associated to each other at least one of which defines at its inside a cavity (23) capable of cooperating with the vacuum circuit of the milking apparatus (17).

No. of Pages : 23 No. of Claims : 10

(12) PATENT APPLICATION PUBLICATION
(21) Application No.1620/KOLNP/2014 A
(19) INDIA
(22) Date of filing of Application :01/08/2014
(43) Publication Date : 23/10/2015

(54) Title of the invention : COVER COUPLING ELEMENT AND FOLDER

(51) International classification :B42B5/00,B42D1/10
(31) Priority Document No :2008193
(32) Priority Date :27/01/2012
(33) Name of priority country :Netherlands
(86) International Application No :PCT/NL2013/050046
Filing Date :28/01/2013
(87) International Publication No :WO 2013/125946
(61) Patent of Addition to Application Number :NA
Filing Date :NA
(62) Divisional to Application Number :NA
Filing Date :NA

(71)**Name of Applicant :**
1)INNOBIND HOLDING B.V.
Address of Applicant :Reaumurstraat 36 NL 1097 RH Amsterdam Netherlands
(72)**Name of Inventor :**
1)GOKKEL Paul

(57) Abstract :
The present invention relates to a cover for at least partially enclosing a stack the stack comprising at least two sheets the cover comprising: a front cover member for placing at the front side of the stack; a rear cover member for placing at the rear side of the stack and connected to the front cover member a spine crease or spine part on a spine side for connecting the front cover member and the rear cover member at least in the assembled state with the stack and front coupling means for coupling the front cover member to the respective side of the stack.

No. of Pages : 38 No. of Claims : 16

(12) PATENT APPLICATION PUBLICATION
(19) INDIA
(22) Date of filing of Application :09/07/2014
(21) Application No.1442/KOLNP/2014 A
(43) Publication Date : 23/10/2015

(54) Title of the invention : BOOM OF CONCRETE PUMP TRUCK AND CONCRETE PUMP TRUCK

(51) International classification :E04G21/04
(31) Priority Document No :201110414082.0
(32) Priority Date :13/12/2011
(33) Name of priority country :China
(86) International Application No :PCT/CN2012/082697
Filing Date :10/10/2012
(87) International Publication No :WO 2013/086893
(61) Patent of Addition to Application Number :NA
Filing Date :NA
(62) Divisional to Application Number :NA
Filing Date :NA

(71)**Name of Applicant :**
1)ZOOMLION HEAVY INDUSTRY SCIENCE AND TECHNOLOGY CO. LTD.
Address of Applicant :No. 361 Yinpen South Road Yuelu District Changsha Hunan 410013 China
2)HUNAN ZOOMLION INTELLIGENT TECHNOLOGY CO. LTD
(72)**Name of Inventor :**
1)WU Binxing
2)HUANG Ke
3)ZHOU Lingjing

(57) Abstract :
A boom of a concrete pump truck and a concrete pump truck having the boom. The boom has a folded state and an unfolded state and comprises seven boom sections (1 to 7) hinged in sequence. When the boom is in the folded state the seven boom sections (1 to 7) are basically arranged into five mutually staggered straight lines and at least the last two boom sections (6 7) are on the same straight line. Due to such configuration the overall size of the boom sections can be greatly reduced and the requirements of the road running condition can be easily met. In addition when the boom is in the folded state at least last two boom sections (6 7) are on the same straight line; so that the flexibility and the operability of a boom fabric can be greatly improved.

No. of Pages : 18 No. of Claims : 10

(12) PATENT APPLICATION PUBLICATION
(19) INDIA
(22) Date of filing of Application :09/07/2014
(21) Application No.1443/KOLNP/2014 A
(43) Publication Date : 23/10/2015

(54) Title of the invention : HANDOVER RESTRICTION

(51) International classification :H04W48/02,H04W36/00
(31) Priority Document No :NA
(32) Priority Date :NA
(33) Name of priority country :NA
(86) International Application No :PCT/EP2011/072430
Filing Date :12/12/2011
(87) International Publication No :WO 2013/087087
(61) Patent of Addition to Application Number :NA
Filing Date :NA
(62) Divisional to Application Number :NA
Filing Date :NA

(71)**Name of Applicant :**
1)OPTIS WIRELESS TECHNOLOGY LLC
Address of Applicant :P.O. Box 250649 Plano TX 75025 U.S.A.
(72)**Name of Inventor :**
1)RAMLE Peter
2)FORSMAN Maud
3)JOHANSSON Mathias

(57) Abstract :
This disclosure is directed to a source radio access node and a method in the source radio access node for executing a handover of a radio terminal 315 to a target neighboring radio access node 316b from the source radio access node being controlled by a mobility management node 310 which method comprises the actions of: obtaining 401 topology data TD comprising information indicative of at least one neighboring radio access node 316b 316c that is neighboring with respect to the source radio access node 316a and providing 402 the topology data to the mobility management node and receiving 404 from the mobility management node a filtered restriction list FRL comprising information indicative of at least one restricted neighboring radio access node 316c for the radio terminal enabling a handover decision 405 to be made based on the filtered restriction list FRL.

No. of Pages : 55 No. of Claims : 20

(12) PATENT APPLICATION PUBLICATION
(19) INDIA
(22) Date of filing of Application :09/07/2014
(21) Application No. 1444/KOLNP/2014 A
(43) Publication Date : 23/10/2015

(54) Title of the invention : CONSTRUCTION PANEL AND MANUFACTURE THEREOF

(51) International classification :E04C2/04
(31) Priority Document No :1121246.1
(32) Priority Date :12/12/2011
(33) Name of priority country :U.K.
(86) International Application No :PCT/EP2012/075251
Filing Date :12/12/2012
(87) International Publication No :WO 2013/087705
(61) Patent of Addition to Application Number :NA
Filing Date :NA
(62) Divisional to Application Number :NA
Filing Date :NA

(71)**Name of Applicant :**
1)SAINT GOBAIN PLACO SAS
Address of Applicant :34 Avenue Franklin Roosevelt F 92150 Suresnes France
(72)**Name of Inventor :**
1)VIVIER Guillaume
2)BARRAUD Thomas
3)DODSON Valentina
4)JONES Nicholas
5)YOUNG Jonathan

(57) Abstract :
A panel for use in building construction comprises a substrate board having two opposed faces. A lamina is secured to a first one of the faces of the substrate board by means of one or more regions of bonding between the lamina and the board. The one or more regions of bonding cover a total area that is less than 20% of the total interfacial area between the lamina and the board.

No. of Pages : 29 No. of Claims : 21

(12) PATENT APPLICATION PUBLICATION
(19) INDIA
(22) Date of filing of Application :22/07/2014
(21) Application No.1541/KOLNP/2014 A
(43) Publication Date : 23/10/2015

(54) Title of the invention : SUBSEA HEAT EXCHANGER CLEANING TOOL AND APPURTENANT METHOD

(51) International classification :F28F9/02,F28G1/02,E21B36/00
(31) Priority Document No :20120173
(32) Priority Date :20/02/2012
(33) Name of priority country :Norway
(86) International Application No:PCT/NO2013/050031
Filing Date :19/02/2013
(87) International Publication No :WO 2013/125960
(61) Patent of Addition to Application Number :NA
Filing Date :NA
(62) Divisional to Application Number :NA
Filing Date :NA

(71)**Name of Applicant :**
1)AKER SUBSEA AS
Address of Applicant :P.O.Box 94 N 1325 Lysaker Norway
(72)**Name of Inventor :**
1)ANDERSEN Per Karsten
2)STINESSEN Kjell Olav

(57) Abstract :
Subsea heat exchanger (1) cooling a hydrocarbon containing fluid by flowing seawater through it. Cooling pipes (4) are arranged in a convection section (11). The heat exchanger has an inlet (5a) and an outlet (5b) for the hydrocarbon containing fluid and an inlet (21) and outlet (22) for seawater. The seawater inlet (21) is connected to the cooling pipes (4). The inlet (5a) and the outlet (5b) of the hydrocarbon containing fluid are connected to the convection section (11). The seawater can flow through the cooling pipes (4) and the hydrocarbon containing fluid can flow in the convection section (11) in contact with the outer walls of the cooling pipes (4). The heat exchanger comprises also a cap (6) at at least one end of the cooling pipes (4) wherein the cap (6) comprises one or more receiving arrangements (8) for anodes (7) and/or one or more anodes (7).

No. of Pages : 26 No. of Claims : 14

(12) PATENT APPLICATION PUBLICATION
(19) INDIA
(22) Date of filing of Application :06/08/2014
(21) Application No.1638/KOLNP/2014 A
(43) Publication Date : 23/10/2015

(54) Title of the invention : METHOD AND DEVICE FOR PRODUCING PREFORMS

(51) International classification :B29B11/08,B29C49/06,B29C49/64
(31) Priority Document No :10 2012 004 613.8
(32) Priority Date :24/02/2012
(33) Name of priority country :Germany
(86) International Application No :PCT/DE2013/000111
Filing Date :22/02/2013
(87) International Publication No :WO 2013/123931
(61) Patent of Addition to Application Number :NA
Filing Date :NA
(62) Divisional to Application Number :NA
Filing Date :NA

(71)**Name of Applicant :**
1)AKTAS Mahir
Address of Applicant :Mithat Pasa Cad. No. 183 35330 Balcova Izmir Turkey
(72)**Name of Inventor :**
1)AKTAS Mahir

(57) Abstract :
The invention relates to a device and a method for producing a preform (3) having a base geometry optimized for the subsequent stretch blow moulding process. The preform produced in the injection moulding tool is removed in a cooled removal sleeve (7) and cooled in the shaft by intensive contact cooling while as far as possible no cooling contact is made with the top of the preform on account of a special contour of the cooling sleeve. On account of the reheating of this top which is possible as a result the latter can be mechanically deformed into a new geometry which is more advantageous for the blow moulding process and thus the wall thickness of said top can also be influenced. In the subsequent blow moulding process such a deformed preform has primarily the advantage that the plastics material distributed better in the bottle can result in considerable material savings and higher quality bottle bases.

No. of Pages : 34 No. of Claims : 20

(12) PATENT APPLICATION PUBLICATION
(19) INDIA
(22) Date of filing of Application :10/07/2014
(21) Application No.1445/KOLNP/2014 A
(43) Publication Date : 23/10/2015

(54) Title of the invention : METHOD AND APPARATUS FOR DEPLOYING AND SUPPORTING A FLEXIBLE OBJECT

(51) International classification :G09F17/00,E04H12/32
(31) Priority Document No :61/570216
(32) Priority Date :13/12/2011
(33) Name of priority country :U.S.A.
(86) International Application No :PCT/NZ2012/000237
Filing Date :13/12/2012
(87) International Publication No :WO 2013/089566
(61) Patent of Addition to Application Number :NA
Filing Date :NA
(62) Divisional to Application Number :NA
Filing Date :NA

(71)**Name of Applicant :**
1)WOOLLETT John Joseph
Address of Applicant :Nexus Developments Ltd Unit 18 Grenada Business Park 16 Jamaica Drive Grenada North Wellington New Zealand
2)HUME Peter John
(72)**Name of Inventor :**
1)WOOLLETT John Joseph
2)HUME Peter John

(57) Abstract :
An apparatus (1) for deploying and supporting a flexible object (7). The apparatus comprises an elongate support (3) comprising a longitudinal first guide (4) an elongate flexible member (5) longitudinally slidable relative to the first guide (4) a first connector (9) connected to the flexible elongate member (5) and adapted to be attached to the flexible object (7) a longitudinal second guide 6 and at least one sliding connector (9 11 13); (106 111 113; 209 211 213) longitudinally slidable relative to the second guide (6) and adapted to be attached to the flexible object (7). The flexible elongate member (5) is adapted to be pushed along the first guide (4) via an externally applied longitudinal force transferred as a compressive internal force along the flexible member (5) to move the flexible object (7) from a first position to a deployed position.

No. of Pages : 29 No. of Claims : 46

(12) PATENT APPLICATION PUBLICATION
(19) INDIA
(22) Date of filing of Application :10/07/2014
(21) Application No.1446/KOLNP/2014 A
(43) Publication Date : 23/10/2015

(54) Title of the invention : METHOD AND NETWORK NODE FOR HANDLING TCP TRAFFIC

(51) International classification :H04L12/56
(31) Priority Document No :NA
(32) Priority Date :NA
(33) Name of priority country :NA
(86) International Application No :PCT/EP2011/072965
Filing Date :15/12/2011
(87) International Publication No :WO 2013/087116
(61) Patent of Addition to Application Number :NA
Filing Date :NA
(62) Divisional to Application Number :NA
Filing Date :NA

(71)**Name of Applicant :**
1)TELEFONAKTIEBOLAGET L M ERICSSON (PUBL)
Address of Applicant :S 164 83 Stockholm Sweden
(72)**Name of Inventor :**
1)ZHANG Jiangtao
2)JOHANSSON Bengt
3)PETTERSSON Sten

(57) Abstract :
The embodiments herein relate to a method in a network node (110) for handling TCP traffic in a packet switched network (100). The network node (110) receives TCP traffic from a mobile node (101). The TCP traffic comprises an original window size. The network node (110) replaces the original window size with an optimized window size when the network node (110) comprises information about dropped TCP traffic and when the original window size is larger than the optimized window size. The network node (110) sends the TCP traffic comprising the optimized window size to a correspondent node (105) in the packet switched network (100) indicating an amount of TCP traffic receivable by the mobile node (101).

No. of Pages : 41 No. of Claims : 18

(12) PATENT APPLICATION PUBLICATION
(21) Application No.1447/KOLNP/2014 A
(19) INDIA
(22) Date of filing of Application :10/07/2014
(43) Publication Date : 23/10/2015

(54) Title of the invention : BUFFER RESOURCE MANAGEMENT METHOD AND TELECOMMUNICATION EQUIPMENT

(51) International classification :H04L12/58,G06F12/00
(31) Priority Document No :NA
(32) Priority Date :NA
(33) Name of priority country :NA
(86) International Application No :PCT/CN2011/083973
Filing Date :14/12/2011
(87) International Publication No :WO 2013/086702
(61) Patent of Addition to Application Number :NA
Filing Date :NA
(62) Divisional to Application Number :NA
Filing Date :NA

(71)**Name of Applicant :**
1)OPTIS CELLULAR TECHNOLOGY LLC
Address of Applicant :P.O. Box 250649 Plano Texas 75025 U.S.A.
(72)**Name of Inventor :**
1)WANG Jun

(57) Abstract :
The present disclosure relates to a lockless buffer resource management scheme. In the proposed scheme a buffer pool is configured to have an allocation list and a de allocation list. The allocation list includes one or more buffer objects linked by a next pointer in a previous buffer object to a next buffer object and a head pointer pointing to a buffer object at the head of the allocation list. The de allocation list includes one or more buffer objects linked by a next pointer in a previous buffer object to a next buffer object a head pointer pointing to a buffer object at the head of the de allocation list and a tail pointer pointing to a next pointer of a buffer object at the end of the de allocation list wherein the tail pointer is a pointer s pointer.

No. of Pages : 33 No. of Claims : 21

(12) PATENT APPLICATION PUBLICATION
(21) Application No.1641/KOLNP/2014 A
(19) INDIA
(22) Date of filing of Application :06/08/2014
(43) Publication Date : 23/10/2015

(54) Title of the invention : PISTON RING WITH CHROMIUM SOLID PARTICLE WEAR PREVENTION LAYER AND CORROSION RESISTANT FLANK SURFACE

(51) International classification :C23C8/02,C23C8/80,F16J9/26
(31) Priority Document No :10 2012 204 156.7
(32) Priority Date :16/03/2012
(33) Name of priority country :Germany
(86) International Application No :PCT/EP2012/074839
Filing Date :07/12/2012
(87) International Publication No :WO 2013/135325
(61) Patent of Addition to Application Number :NA
Filing Date :NA
(62) Divisional to Application Number :NA
Filing Date :NA

(71)**Name of Applicant :**
1)FEDERAL MOGUL BURSCHEID GMBH
Address of Applicant :Bürgermeister Schmidt Straße 17 51399 Burscheid Germany
(72)**Name of Inventor :**
1)HERBST DEDERICHS Christian
2)URBATZKA Waldemar
3)DÜRDOTH Stefan
4)ESSER Peter Klaus

(57) Abstract :
There is provided a coated piston ring having a main body composed of chromium steel with more than 10 wt.% of chromium which main body has an inner circumferential surface a first flank surface a second flank surface and an outer circumferential surface wherein the first flank surface comprises a nitride diffusion layer with a layer thickness of 5 300 µm a nitride connecting layer arranged immediately above the latter with a layer thickness of 0.5 15 µm and an oxide layer arranged immediately above the latter with a layer thickness of 0.05 3 µm the second flank surface comprises the nitride diffusion layer and the outer circumferential surface comprises the nitride diffusion layer and a chromium solid particle layer arranged above said nitride diffusion layer with 0.1 30 vol.% of solid particles in relation to the total volume of the chromium solid particle layer.

No. of Pages : 18 No. of Claims : 12

(12) PATENT APPLICATION PUBLICATION
(21) Application No.1539/KOLNP/2014 A
(19) INDIA
(22) Date of filing of Application :21/07/2014
(43) Publication Date : 23/10/2015

(54) Title of the invention : RELAY METHOD OF WIRELESS RELAY APPARATUS AND WIRELESS RELAY APPARATUS THEREOF

(51) International classification :H04W76/02
(31) Priority Document No :201110437651.3
(32) Priority Date :23/12/2011
(33) Name of priority country :China
(86) International Application No :PCT/CN2012/086406
Filing Date :12/12/2012
(87) International Publication No :WO 2013/091494
(61) Patent of Addition to Application Number :NA
Filing Date :NA
(62) Divisional to Application Number :NA
Filing Date :NA

(71)**Name of Applicant :**
1)HUAWEI DEVICE CO. LTD.
Address of Applicant :Building B2 Huawei Industrial Base Bantian Longgang Shenzhen Guangdong 518129 China
(72)**Name of Inventor :**
1)ZHU Chong
2)DU Wei

(57) Abstract :
The present invention applies to the communication technology and provides a relay method and wireless relay apparatus thereof. The method comprises the following steps: synchronizing network connection information of the uplink AP (Access Point) with the downlink WLAN AP interface of the wireless relay apparatus; according to the downlink WLAN AP interface corresponding with the synchronized uplink AP obtaining MAC address information of a downlink wireless STA and establishing the uplink WLAN Client interface mapping to the STA MAC address; according to the mapping relationship between the STA MAC and the established uplink WLAN Client interface managing data forwarded between the uplink AP and the downlink wireless STA. The relay technology solution provided by the present invention realizes that the AAA authentication or the billing parties could differently charge to the STA MAC of each STA which is managed by the AAA authentication or the billing parties and meets requirements of the united authentication/billing based on the MAC address.

No. of Pages : 34 No. of Claims : 18

(12) PATENT APPLICATION PUBLICATION
(19) INDIA
(22) Date of filing of Application :21/07/2014
(21) Application No.1540/KOLNP/2014 A
(43) Publication Date : 23/10/2015

(54) Title of the invention : GASIFICATION APPARATUS

(51) International classification :C10J3/02,C10J3/26
(31) Priority Document No :2012000737
(32) Priority Date :05/01/2012
(33) Name of priority country :Japan
(86) International Application No :PCT/JP2012/078961
Filing Date :08/11/2012
(87) International Publication No :WO 2013/103049
(61) Patent of Addition to Application Number :NA
Filing Date :NA
(62) Divisional to Application Number :NA
Filing Date :NA

(71)**Name of Applicant :**
1)YANMAR CO. LTD.
Address of Applicant :1 9 Tsurunocho Kita ku Osaka shi Osaka 5308311 Japan
(72)**Name of Inventor :**
1)WAKIZAKA Hiroaki
2)AKASAKA Futoshi

(57) Abstract :
This gasification apparatus is provided with a gasification furnace for gasifying fuel and a fuel supply device for supplying the fuel to the gasification furnace gas that has been generated within the gasification furnace being supplied to an engine via a gas channel. Also this gasification apparatus is provided with a detecting means for monitoring a furnace atmosphere state arising due to generation of tar in the gasification furnace and a control device for stopping the supply of the gas to the engine when the furnace atmosphere state is determined to necessitate tar avoidance.

No. of Pages : 34 No. of Claims : 3

(12) PATENT APPLICATION PUBLICATION
(19) INDIA
(22) Date of filing of Application :04/08/2014
(21) Application No.1635/KOLNP/2014 A
(43) Publication Date : 23/10/2015

(54) Title of the invention : PREFORMED FORMWORK FOR FORMING CONCRETE FLOOR SLAB FOR A HEIGHT ADJUSTABLE SHIPPING CONTAINER BUILDING STRUCTURE

(51) International classification :E04G11/36,E04B1/343,E04B5/16
(31) Priority Document No :2012900570
(32) Priority Date :17/02/2012
(33) Name of priority country :Australia
(86) International Application No :PCT/AU2013/000127
Filing Date :15/02/2013
(87) International Publication No :WO 2013/120136
(61) Patent of Addition to Application Number :NA
Filing Date :NA
(62) Divisional to Application Number :NA
Filing Date :NA

(71)**Name of Applicant :**
1)LIFTING POINT PTY LTD
Address of Applicant :81 Henry St Penrith New South Wales 2750 Australia
(72)**Name of Inventor :**
1)MULLANEY Nicholas Bruce

(57) Abstract :
A preformed formwork for forming concrete floor slab for a height adjustable shipping container building structure. The preformed formwork (100) includes a frame having spaced apart side beams (102 104) spaced apart end beams (101 103) and fork lifting supports (106) that equally spaced apart from the centre of the frame extending between the spaced apart side beams (102 104). Reinforcing (107) is situated within the internal area of the frame and attached to internal surface of the side and end beams (101 102 103 104). Wall receiving feature on the external surface of the side and end beams to accommodate support and attach a portion of wall panel to the end and side beams. Columns (105) are engaged and supported at the corners of the frame. The preformed formwork is dimensioned to equal the floor area of a standard shipping container such that the preformed formwork is able to be readily and easily transported within a height adjustable shipping container containing building components and able to be readily and easily erected and assembled as ether a ground floor or upper level floor of a building structure prior to been formed in to a concrete slab.

No. of Pages : 20 No. of Claims : 11

(12) PATENT APPLICATION PUBLICATION
(21) Application No.1637/KOLNP/2014 A
(19) INDIA
(22) Date of filing of Application :04/08/2014
(43) Publication Date : 23/10/2015

(54) Title of the invention : DEVICE FOR BEVERAGE PRODUCTION

(51) International classification :A47J19/00
(31) Priority Document No :201230163 U
(32) Priority Date :15/02/2012
(33) Name of priority country :Spain
(86) International Application No :PCT/EP2013/052709
Filing Date :11/02/2013
(87) International Publication No :WO 2013/120813
(61) Patent of Addition to Application Number :NA
Filing Date :NA
(62) Divisional to Application Number :NA
Filing Date :NA

(71)**Name of Applicant :**
1)MONFORTE DUART Andoni
Address of Applicant :Pol. Ind NIII Calle 12 (Calle Picapedrer) Nave 10 E 46120 Alboraya (Valencia) Spain
(72)**Name of Inventor :**
1)MONFORTE DUART Andoni

(57) Abstract :
Device for producing beverages compatible with any hand held domestic blender which enables producing beverages either by crushing a solid element from which the juice is extracted and at the same time filtering the same or enabling mixing a solid element with a liquid one at the same time that it is being filtered the device comprises at least one filtering beaker (2) a pestle (6) for inserting into the filtering beaker and means (1) for holding the filtering beaker.

No. of Pages : 15 No. of Claims : 20

(12) PATENT APPLICATION PUBLICATION
(19) INDIA
(22) Date of filing of Application :08/07/2014
(21) Application No.1437/KOLNP/2014 A
(43) Publication Date : 23/10/2015

(54) Title of the invention : ADAPTING OUTPUT POWER OF A RADIO TRANSMITTING ENTITY

(51) International classification :H04B7/155,H04W52/04
(31) Priority Document No :NA
(32) Priority Date :NA
(33) Name of priority country :NA
(86) International Application No :PCT/EP2011/072283
Filing Date :09/12/2011
(87) International Publication No :WO 2013/083198
(61) Patent of Addition to Application Number :NA
Filing Date :NA
(62) Divisional to Application Number :NA
Filing Date :NA

(71)**Name of Applicant :**
1)TELEFONAKTIEBOLAGET L M ERICSSON (PUBL)
Address of Applicant :S 164 83 Stockholm Sweden
(72)**Name of Inventor :**
1)MEYER Michael
2)SACHS Joachim
3)FURUSKÄR Anders

(57) Abstract :
A method of adapting the output power of a radio transmitting entity (2) within a cage having at least one aperture (7 8) said method comprising the steps of providing at least one sensor (6 5) operable to sense the condition of the at least one aperture (7 8) providing a controller (21) operable to adjust the output power of the radio transmitting entity (2) in accordance with the sensed condition of the at least one aperture (7 8).

No. of Pages : 13 No. of Claims : 14

(12) PATENT APPLICATION PUBLICATION
(21) Application No.1438/KOLNP/2014 A
(19) INDIA
(22) Date of filing of Application :08/07/2014
(43) Publication Date : 23/10/2015

(54) Title of the invention : A DRILL BIT FOR A PERCUSSIVE HAMMER AND SHANK THEREFORE

(51) International classification :E21B10/36,E21B17/07
(31) Priority Document No :12150466.6
(32) Priority Date :09/01/2012
(33) Name of priority country :EPO
(86) International Application No :PCT/EP2012/074791
Filing Date :07/12/2012
(87) International Publication No :WO 2013/104470
(61) Patent of Addition to Application Number :NA
Filing Date :NA
(62) Divisional to Application Number :NA
Filing Date :NA

(71)**Name of Applicant :**
1)SANDVIK INTELLECTUAL PROPERTY AB
Address of Applicant :S 811 81 Sandviken Sweden
(72)**Name of Inventor :**
1)SEPPÄLÄ Conny
2)JANSSON Tomas Sh

(57) Abstract :
This invention relates to a bit (1) for a percussive hammer and shank therefore. The bit comprises an elongated shank (2) a head (4) at a first end of the shank (2) and an array of lengthwise extending spline portions defining outwardly extending retention lugs (20) at or toward a further end of the shank (2). At least a side face (30) of at least one lug (20) is blended into the shank (2) of the bit (1).

No. of Pages : 14 No. of Claims : 10

(12) PATENT APPLICATION PUBLICATION
(21) Application No.1633/KOLNP/2014 A
(19) INDIA
(22) Date of filing of Application :04/08/2014
(43) Publication Date : 23/10/2015

(54) Title of the invention : METHODS AND APPARATUS FOR CONFIGURING AND IMPLEMENTING ANNOUNCEMENTS FOR IP MULTIMEDIA SUBSYSTEM SUPPLEMENTARY SERVICES

(51) International classification	:H04L29/06
(31) Priority Document No	:NA
(32) Priority Date	:NA
(33) Name of priority country	:NA
(86) International Application No	:PCT/EP2012/050527
Filing Date	:13/01/2012
(87) International Publication No	:WO 2013/104429
(61) Patent of Addition to Application Number	:NA
Filing Date	:NA
(62) Divisional to Application Number	:NA
Filing Date	:NA

(71)**Name of Applicant :**
1)TELEFONAKTIEBOLAGET L M ERICSSON (PUBL)
Address of Applicant :SE 164 83 Stockholm Sweden
(72)**Name of Inventor :**
1)FORSBERG Mikael
2)OLSSON John

(57) Abstract :
According to a first aspect of the present invention there is provided a method of operating an Application Server (AS) that implements an IP Multimedia Subsystem (IMS) supplementary service for a user. The method comprises configuring a rule for the user the rule having an action specifying whether or not an announcement is to be provided and if an announcement is to be provided defining media to be used for the announcement. The method further comprises determining if a condition of the rule is met by a Session Initiation Protocol (SIP) message relating to the user and if so implementing an announcement in accordance with the action.

No. of Pages : 33 No. of Claims : 26

(12) PATENT APPLICATION PUBLICATION
(19) INDIA
(22) Date of filing of Application :04/08/2014
(21) Application No.1634/KOLNP/2014 A
(43) Publication Date : 23/10/2015

(54) Title of the invention : HEIGHT ADJUSTABLE COLUMN FOR A SHIPPING CONTAINER BUILDING STRUCTURE

(51) International classification :E04B1/343,E04B1/18,B65D90/20
(31) Priority Document No :2012900570
(32) Priority Date :17/02/2012
(33) Name of priority country :Australia
(86) International Application No :PCT/AU2013/000129
Filing Date :15/02/2013
(87) International Publication No :WO 2013/120138
(61) Patent of Addition to Application Number :NA
Filing Date :NA
(62) Divisional to Application Number :NA
Filing Date :NA

(71)**Name of Applicant :**
1)LIFTING POINT PTY LTD
Address of Applicant :81 Henry St Penrith New South Wales 2750 Australia
(72)**Name of Inventor :**
1)MULLANEY Nicholas Bruce
2)HOWELL James Richard

(57) Abstract :
A height adjustable column 100 for a shipping container building structure. The height adjustable column has an upper sleeve portion 105 a middle sleeve portion 104 and a lower sleeve 101. The middle sleeve portion 104 is able slide and be positioned within the lower and upper sleeve portions 101 105. The upper sleeve portion 105 is able to slide and be positioned within the lower sleeve portion 101 so that when the column is in the non extended position the middle sleeve portion 104 is fully slid within the lower and upper sleeve portions 101 105 and a substantive length of the upper sleeve portion 105 is slid within the lower sleeve portion 101 such that the ISO apertures 1031 of the middle sleeve portion 104 is aligned and coincides with the ISO apertures 1011 of the lower sleeve portion 101 and the upper ISO apertures 1041 of the middle sleeve portion 104 is aligned and coincides with the ISO apertures 1071 of the upper sleeve portion 101 whereby the height of the column 100 is at a reduced height compared to that that of a standard shipping container. When the column 100 is in the extended position locking means 1044 on the middle sleeve portion 104 engage and lock with the corresponding slotted apertures 1025 1055 on the lower and upper sleeve portions 101 105 as to support and retain the column 100 at a height equal to or greater than the height of a standard shipping container.

No. of Pages : 39 No. of Claims : 21

(12) PATENT APPLICATION PUBLICATION
(19) INDIA
(22) Date of filing of Application :11/07/2014
(21) Application No.1463/KOLNP/2014 A
(43) Publication Date : 23/10/2015

(54) Title of the invention : A METHOD OF FORMING A GYPSUM BASED PRODUCT

(51) International classification :C04B11/032,C04B28/14
(31) Priority Document No :1121589.4
(32) Priority Date :15/12/2011
(33) Name of priority country :U.K.
(86) International Application No :PCT/EP2012/075353
Filing Date :13/12/2012
(87) International Publication No :WO 2013/087754
(61) Patent of Addition to Application Number :NA
Filing Date :NA
(62) Divisional to Application Number :NA
Filing Date :NA

(71)**Name of Applicant :**
1)SAINT GOBAIN PLACO SAS
Address of Applicant :34 Avenue Franklin Roosevelt F 92150 Suresnes France
(72)**Name of Inventor :**
1)MONGROLLE Jean Louis
2)GERMAIN Jean Luc

(57) Abstract :
A method of forming a gypsum based product is disclosed. The method comprises the steps of: calcining a mixture of water and gypsum under conditions of raised temperature and pressure within a vessel to produce an alpha hemihydrate slurry therein; passing the alpha hemihydrate slurry from the vessel to a mixer for mixing with additional water to produce a settable slurry which is arranged to set to form the gypsum based product.

No. of Pages : 13 No. of Claims : 17

(12) PATENT APPLICATION PUBLICATION
(19) INDIA
(22) Date of filing of Application :11/07/2014
(21) Application No.1464/KOLNP/2014 A
(43) Publication Date : 23/10/2015

(54) Title of the invention : METHOD AND SYSTEM FOR GENERATING ODD ORDER PREDISTORTIONS FOR A POWER AMPLIFIER RECEIVING CONCURRENT DUAL BAND INPUTS

(51) International classification :H03F1/32
(31) Priority Document No :13/351121
(32) Priority Date :16/01/2012
(33) Name of priority country :U.S.A.
(86) International Application No :PCT/IB2012/056807
Filing Date :28/11/2012
(87) International Publication No :WO 2013/108094
(61) Patent of Addition to Application Number :NA
Filing Date :NA
(62) Divisional to Application Number :NA
Filing Date :NA

(71)**Name of Applicant :**
1)TELEFONAKTIEBOLAGET L M ERICSSON (PUBL)
Address of Applicant :S 164 83 Stockholm Sweden
(72)**Name of Inventor :**
1)BAI Chunlong

(57) Abstract :
A method and system for pre distorting a dual band signal to compensate for distortion of a non linear power amplifier in a radio transmitter are disclosed. In one embodiment a first and second signal of the dual band signal are up sampled at a sampling rate that is based at least in part on the bandwidth of at least one of the first and second signals and based at least in part on an intermediate frequency by which the first and second signal are tuned before pre distortion of the tuned signals.

No. of Pages : 58 No. of Claims : 26

(12) PATENT APPLICATION PUBLICATION
(19) INDIA
(22) Date of filing of Application :11/07/2014
(21) Application No.1465/KOLNP/2014 A
(43) Publication Date : 23/10/2015

(54) Title of the invention : CIRCUIT SWITCHED FALLBACK PROXY

(51) International classification :H04W36/00,H04W76/02
(31) Priority Document No :61/576608
(32) Priority Date :16/12/2011
(33) Name of priority country :U.S.A.
(86) International Application No :PCT/EP2012/072312
Filing Date :09/11/2012
(87) International Publication No :WO 2013/087318
(61) Patent of Addition to Application Number :NA
Filing Date :NA
(62) Divisional to Application Number :NA
Filing Date :NA

(71)**Name of Applicant :**
1)TELEFONAKTIEBOLAGET L M ERICSSON (PUBL)
Address of Applicant :S 16483 Stockholm Sweden
(72)**Name of Inventor :**
1)GEMSKI Sven
2)ARVIDSSON ke

(57) Abstract :
The present invention relates to proxy (100) handling messages of a mobile user entity in a mobile communications network the mobile communications network comprising a first switching control node (15) supporting a Circuit Switched Fallback CSFB functionality and a second switching control node (18) not supporting the Circuit Switched Fallback CSFB functionality. The proxy comprises an interface configured to receive a message containing an Circuit Switched Fallback Mobile Originated CSMO call indicator or a Circuit Switched Fallback Mobile Terminated CSMT call indicator from the mobile user entity; the proxy also comprises a control unit configured to determine whether the Circuit Switched Fallback Mobile Originated CSMO call indicator or the Circuit Switched Fallback Mobile Terminated CSMT call indicator is set in the received message wherein the control unit is configured to initiate a routing of the received message to the first switching control node (15) if the Circuit Switched Fallback Mobile Originated CSMO call indicator or the Circuit Switched Fallback Mobile Terminated CSMT call indicator is set wherein the control unit is configured to initiate a routing of the received message to the second switching control node (18) if neither the Circuit Switched Fallback Mobile Originated CSMO call indicator nor the Circuit Switched Fallback Mobile Terminated CSMT call indicator is set.

No. of Pages : 68 No. of Claims : 30

(12) PATENT APPLICATION PUBLICATION
(19) INDIA
(22) Date of filing of Application :11/08/2014
(21) Application No.1664/KOLNP/2014 A
(43) Publication Date : 23/10/2015

(54) Title of the invention : MULTI LAYER NICOTINE CONTAINING PHARMACEUTICAL COMPOSITION

(51) International classification :A61K31/465,A61K9/00,A61K9/20
(31) Priority Document No :13/370505
(32) Priority Date :10/02/2012
(33) Name of priority country :U.S.A.
(86) International Application No :PCT/US2013/025067
Filing Date :07/02/2013
(87) International Publication No :WO 2013/119760
(61) Patent of Addition to Application Number :NA
Filing Date :NA
(62) Divisional to Application Number :NA
Filing Date :NA

(71)**Name of Applicant :**
1)NICONOVUM USA INC.
Address of Applicant :401 North Main Street Winston Salem North Carolina 27101 3804 U.S.A.
(72)**Name of Inventor :**
1)DUGGINS Donna Walker
2)MUA John Paul
3)HOLTON Darrell Eugene Jr.
4)CANTRELL Daniel Verdin

(57) Abstract :
The invention provides a multi layered pharmaceutical composition comprising two or more formulations with varying properties. In some embodiments the pharmaceutical compositions provide combinations of different organoleptic properties within the same product. In certain embodiment these combinations allow for a modified release profile of active ingredients as the user enjoys the pharmaceutical composition. The invention further provides methods for making and using the pharmaceutical composition.

No. of Pages : 58 No. of Claims : 33

(12) PATENT APPLICATION PUBLICATION
(21) Application No.1467/KOLNP/2014 A
(19) INDIA
(22) Date of filing of Application :12/07/2014
(43) Publication Date : 23/10/2015

(54) Title of the invention : POCKET SIZED PACKET TO CONTAIN SMALL SIZED PRODUCTS

(51) International classification :B65D5/66,B65D85/10
(31) Priority Document No :MI2012A000006
(32) Priority Date :03/01/2012
(33) Name of priority country :Italy
(86) International Application No :PCT/IB2013/000003
Filing Date :02/01/2013
(87) International Publication No :WO 2013/102841
(61) Patent of Addition to Application Number :NA
Filing Date :NA
(62) Divisional to Application Number :NA
Filing Date :NA

(71)**Name of Applicant :**
1)GIMA TT S.R.L.
Address of Applicant :Via Tolara di Sotto 121/A I 40064 Ozzano dellEmillia (Bologna) Italy
(72)**Name of Inventor :**
1)DRAGHETTI Fiorenzo

(57) Abstract :
Pocket sized packet comprising a container (11) having a plurality of walls (15 16 18 19) that define an internal compartment (20) suitable to contain small goods and a lid (12 112) hinged on said container (11). A tongue (25) is hinged on an upper edge (26) of the container (11).

No. of Pages : 14 No. of Claims : 12

(12) PATENT APPLICATION PUBLICATION
(21) Application No.1565/KOLNP/2014 A
(19) INDIA
(22) Date of filing of Application :24/07/2014
(43) Publication Date : 23/10/2015

(54) Title of the invention : ADJUSTMENT OF A CAPACITOR CHARGE VOLTAGE

(51) International classification :H02J7/04,H02J7/00
(31) Priority Document No :NA
(32) Priority Date :NA
(33) Name of priority country :NA
(86) International Application No :PCT/EP2012/050563
Filing Date :16/01/2012
(87) International Publication No :WO 2013/107497
(61) Patent of Addition to Application Number :NA
Filing Date :NA
(62) Divisional to Application Number :NA
Filing Date :NA

(71)**Name of Applicant :**
1)SCHNEIDER ELECTRIC BUILDINGS LLC
Address of Applicant :One High Street North Andover MA 02845 U.S.A.
(72)**Name of Inventor :**
1)GÖTH Fredrik

(57) Abstract :
There is provided a method and arrangements for adjusting a charge voltage of a capacitor which is used as a power back up in a system having a required energy level. The method comprises adjusting the charge voltage of the capacitor based on a received capacitance value and a received value of the required energy level. The adjustment is performed such that an energy level stored in the capacitor is kept essentially constant. The invention is advantageous in that it extends the lifetime of the capacitor.

No. of Pages : 29 No. of Claims : 15

(12) PATENT APPLICATION PUBLICATION
(19) INDIA
(22) Date of filing of Application :24/07/2014
(21) Application No.1566/KOLNP/2014 A
(43) Publication Date : 23/10/2015

(54) Title of the invention : METHOD AND DEVICE FOR SECURELY PROCESSING SHORT MESSAGES

(51) International classification :H04W4/14
(31) Priority Document No :201210018183.0
(32) Priority Date :19/01/2012
(33) Name of priority country :China
(86) International Application No :PCT/CN2013/070447
Filing Date :15/01/2013
(87) International Publication No :WO 2013/107330
(61) Patent of Addition to Application Number :NA
Filing Date :NA
(62) Divisional to Application Number :NA
Filing Date :NA

(71)**Name of Applicant :**
1)HUAWEI TECHNOLOGIES CO. LTD.
Address of Applicant :Huawei Administration Building Bantian Longgang Shenzhen Guangdong 518129 China
(72)**Name of Inventor :**
1)ZHANG Lijia
2)CHEN Jing
3)XIONG Chunshan

(57) Abstract :
Disclosed are a method and device for securely processing short messages which relate to the technical field of wireless communications. The method comprises: a second device receiving identification information sent by a first device; the second device sending a reject indication or a query result to the first device if confirming that a receiver is a machine type communication (MTC) device in accordance with the identification information or confirming that the identification information is not in an authorization list; and alternatively the second device sending a confirmation indication or a query result to the first device if confirming that the receiver is a device other than the MTC device in accordance with the identification information or confirming that the identification information is in the authorization list. The embodiments of the present invention are mainly applied to the secure processing procedure of short messages.

No. of Pages : 56 No. of Claims : 38

(12) PATENT APPLICATION PUBLICATION
(21) Application No.1567/KOLNP/2014 A
(19) INDIA
(22) Date of filing of Application :24/07/2014
(43) Publication Date : 23/10/2015

(54) Title of the invention : STANDALONE HS DPCCH ESTABLISHMENT METHOD AND DEVICE

(51) International classification :H04W74/00,H04W88/00
(31) Priority Document No :201210049951.9
(32) Priority Date :29/02/2012
(33) Name of priority country :China
(86) International Application No :PCT/CN2012/084509
Filing Date :13/11/2012
(87) International Publication No :WO 2013/127194
(61) Patent of Addition to Application Number :NA
Filing Date :NA
(62) Divisional to Application Number :NA
Filing Date :NA

(71)**Name of Applicant :**
1)HUAWEI TECHNOLOGIES CO. LTD.
Address of Applicant :Huawei Administration Building Bantian Longgang Shenzhen Guangdong 518129 China
(72)**Name of Inventor :**
1)PANG Lingli
2)ZHENG Xiaoxiao

(57) Abstract :
Disclosed are a standalone high speed dedicated physical control channel (HS DPCCH) establishment method and related device the method comprising: a base station receives downlink data transmitted by a wireless network controller the downlink data containing the indication information used to indicate that a user equipment (UE) supports the standalone HS DPCCH; transmitting trigger information to the UE supporting the standalone HS DPCCH and triggering the establishment of the standalone HS DPCCH. Also disclosed in an embodiment of the present invention are a corresponding base station and wireless network controller. In the technical solution of the present invention a base station is not required to transmit the trigger information to a UE not supporting the standalone HS DPCCH thus avoiding the waste of HS DPCCH resource and reducing the scheduling delay for UE downlink data.

No. of Pages : 35 No. of Claims : 26

(12) PATENT APPLICATION PUBLICATION
(19) INDIA
(22) Date of filing of Application :11/08/2014
(21) Application No.1663/KOLNP/2014 A
(43) Publication Date : 23/10/2015

(54) Title of the invention : MULTI LAYER SMOKELESS TOBACCO COMPOSITION

(51) International classification :A24B13/00,A23G3/54,A23G4/20
(31) Priority Document No :13/370600
(32) Priority Date :10/02/2012
(33) Name of priority country :U.S.A.
(86) International Application No :PCT/US2013/025129
Filing Date :07/02/2013
(87) International Publication No :WO 2013/119799
(61) Patent of Addition to Application Number :NA
Filing Date :NA
(62) Divisional to Application Number :NA
Filing Date :NA

(71)**Name of Applicant :**
1)R. J. REYNOLDS TOBACCO COMPANY
Address of Applicant :401 North Main Street Winston Salem North Carolina 27101 3804 U.S.A.
(72)**Name of Inventor :**
1)DUGGINS Donna Walker
2)MUA John Paul
3)HOLTON JR. Darrell Eugene
4)CANTRELL Daniel Verdin

(57) Abstract :
The invention provides a multi layered smokeless tobacco product comprising two or more formulations with varying properties. In some embodiments the smokeless tobacco products provide combinations of different organoleptic properties within the same product. In certain embodiment these combinations allow for a modified release profile of active ingredients as the user enjoys the smokeless tobacco product. The invention further provides methods for making and using the smokeless tobacco product.

No. of Pages : 59 No. of Claims : 31

(12) PATENT APPLICATION PUBLICATION
(19) INDIA
(22) Date of filing of Application :24/07/2014
(21) Application No.1568/KOLNP/2014 A
(43) Publication Date : 23/10/2015

(54) Title of the invention : OFFLINE CHARGING OF M2M INTERACTIONS

(51) International classification	:H04W4/00,H04W4/24,H04L12/14
(31) Priority Document No	:61/583813
(32) Priority Date	:06/01/2012
(33) Name of priority country	:U.S.A.
(86) International Application No	:PCT/IB2013/050104
Filing Date	:04/01/2013
(87) International Publication No	:WO 2013/102890
(61) Patent of Addition to Application Number	:NA
Filing Date	:NA
(62) Divisional to Application Number	:NA
Filing Date	:NA

(71)**Name of Applicant :**
1)TELEFONAKTIEBOLAGET LM ERICSSON (PUBL)
Address of Applicant :S 164 83 Stockholm Sweden
(72)**Name of Inventor :**
1)FOTI George

(57) Abstract :
An M2M CDF is used to allow the creation of charging records in an M2M domain that can be correlated to charging records in a transport domain. This correlation of data can be used to provide a network access provider with the ability to provide M2M based charging in a variety of scenarios using different network topologies.

No. of Pages : 29 No. of Claims : 20

(12) PATENT APPLICATION PUBLICATION
(19) INDIA
(22) Date of filing of Application :24/07/2014
(21) Application No.1569/KOLNP/2014 A
(43) Publication Date : 23/10/2015

(54) Title of the invention : COATED CUTTING TOOL AND METHOD OF MAKING THE SAME

(51) International classification :C23C30/00,C23C28/04,B23B27/00
(31) Priority Document No :12155313.5
(32) Priority Date :14/02/2012
(33) Name of priority country :EPO
(86) International Application No :PCT/EP2013/000438
Filing Date :14/02/2013
(87) International Publication No :WO 2013/120614
(61) Patent of Addition to Application Number :NA
Filing Date :NA
(62) Divisional to Application Number :NA
Filing Date :NA

(71)**Name of Applicant :**
1)SANDVIK INTELLECTUAL PROPERTY AB
Address of Applicant :S 811 81 Sandviken Sweden
(72)**Name of Inventor :**
1)AHLGREN Mats
2)GHAFOOR Naureen
3)ODÉN Magnus
4)ROGSTRÖM Lina

(57) Abstract :
The present invention relates to a coated cutting tool with a coating comprising a multilayer structure consisting of alternating layers A and B forming the sequence A/B/A/B/A... or alternating layers A and B and an intermediate layer C between the alternating layers A and B forming the sequence A/C/B/C/A/C/B.... Layer A consists of ZrAIN and layer B consists of TiN. Layer C comprises one or more metal elements from each of layers A and B and is of different composition and structure than layers A and B. A method for forming the coated cutting tool is also provided. The method comprises heat treatment of the coated cutting tool prior to use.

No. of Pages : 18 No. of Claims : 17

(12) PATENT APPLICATION PUBLICATION
(19) INDIA
(22) Date of filing of Application :12/08/2014
(21) Application No.1671/KOLNP/2014 A
(43) Publication Date : 23/10/2015

(54) Title of the invention : DUAL PREVENTION LOCK DEVICE FOR LOCKING BOLT AND METHOD FOR LOCKING BOLT

(51) International classification :E05B65/00,E05B63/00,E05B15/00
(31) Priority Document No :201210237949.4
(32) Priority Date :09/07/2012
(33) Name of priority country :China
(86) International Application No :PCT/CN2013/077557
Filing Date :20/06/2013
(87) International Publication No :WO 2014/008805
(61) Patent of Addition to Application Number :NA
Filing Date :NA
(62) Divisional to Application Number :NA
Filing Date :NA

(71)**Name of Applicant :**
1)GUO Chunping
Address of Applicant :No.79 Wenming South Street Jiexiu Shanxi 032000 China
(72)**Name of Inventor :**
1)GUO Chunping

(57) Abstract :
A dual prevention lock device for locking a bolt and a method for locking a bolt. The dual prevention lock device comprises: a lower lock body (6); an upper lock body (1) mounted on the lower lock body (6) an accommodation space for placing a bolt (3) to be locked being formed between the upper lock body (1) and the lower lock body (6); and a lock core (11) mounted on the lower lock body (6). A lower fastening component extending into the accommodation space is arranged on the lower lock body (6) and an upper fastening component extending into the accommodation space is arranged on the upper lock body (1). Under the action of a key the lock core (11) actuates the fastening components so that the bolt (3) to be locked is locked in the accommodation space by the lower fastening component and the upper fastening component. With the upper and lower fastening components for locking a bolt the dual prevention lock device has a reliable performance and simple structural design.

No. of Pages : 14 No. of Claims : 12

(12) PATENT APPLICATION PUBLICATION
(19) INDIA
(22) Date of filing of Application :12/08/2014
(21) Application No.1672/KOLNP/2014 A
(43) Publication Date : 23/10/2015

(54) Title of the invention : FLUIDICS MODULE DEVICE AND METHOD FOR PUMPING A LIQUID

(51) International classification :F04F1/02,F04B19/00,B01F13/00
(31) Priority Document No :10 2012 202 775.0
(32) Priority Date :23/02/2012
(33) Name of priority country :Germany
(86) International Application No :PCT/EP2013/053243
Filing Date :19/02/2013
(87) International Publication No :WO 2013/124258
(61) Patent of Addition to Application Number :NA
Filing Date :NA
(62) Divisional to Application Number :NA
Filing Date :NA

(71)**Name of Applicant :**
1)HAHN SCHICKARD GESELLSCHAFT FÜR ANGEWANDTE FORSCHUNG E.V.
Address of Applicant :Wilhelm Schickard Straße 10 78052 Villingen Schwenningen Germany
(72)**Name of Inventor :**
1)PAUST Nils
2)ZEHNLE Steffen
3)VON STETTEN Felix

(57) Abstract :
A fluidics module (10) rotatable about a rotational center (52) comprises a first chamber (60) a second chamber (64) and a compression chamber (62). A first fluid channel (68) is provided between the first chamber (60) and the compression chamber (62) and a second fluid channel (74) is provided between the second chamber (64) and the compression chamber (62). The flow resistance of the second fluid channel (74) is smaller for a flow of liquid from the compression chamber to the second chamber than a flow resistance of the first fluid channel (68) for a flow of liquid from the compression chamber to the first chamber. Upon rotation at a high rotational frequency liquid is initially introduced from the first chamber (60) into the compression chamber (62) via the first fluid channel (68) so that a compressible medium is compressed within the compression chamber. Subsequently the rotational frequency is reduced so that the compressible medium within the compression chamber will expand and so that thereby liquid is driven into the second chamber (64) via the second fluid channel (74).

No. of Pages : 23 No. of Claims : 14

(12) PATENT APPLICATION PUBLICATION
(19) INDIA
(22) Date of filing of Application :15/07/2014
(21) Application No.1487/KOLNP/2014 A
(43) Publication Date : 23/10/2015

(54) Title of the invention : ELASTOMERIC DEPTH FILTER

(51) International classification :B01D39/14,B01D39/08
(31) Priority Document No :61/583157
(32) Priority Date :04/01/2012
(33) Name of priority country :U.S.A.
(86) International Application No :PCT/US2013/020220
Filing Date :04/01/2013
(87) International Publication No :WO 2013/103765
(61) Patent of Addition to Application Number :NA
Filing Date :NA
(62) Divisional to Application Number :NA
Filing Date :NA

(71)**Name of Applicant :**
1)NORTH CAROLINA STATE UNIVERSITY
Address of Applicant :1021 Main Campus Drive Raleigh North Carolina 27606 U.S.A.
(72)**Name of Inventor :**
1)POURDEYHIMI Behnam

(57) Abstract :
The present disclosure provides a depth filter medium comprising at least one elastomeric nonwoven web strengthened by combination with one or more structural support layers. The resulting material is particularly useful in the field of filtration wherein particulates captured within the elastomeric nonwoven web can be readily released such as by applying pressure to the web through backwashing. The elastomeric nonwoven web advantageously can stretch under such pressure and return substantially to its original structure and shape upon the removal of the pressure rendering the filter available for reuse.

No. of Pages : 31 No. of Claims : 25

(12) PATENT APPLICATION PUBLICATION
(19) INDIA
(22) Date of filing of Application :15/07/2014
(21) Application No.1489/KOLNP/2014 A
(43) Publication Date : 23/10/2015

(54) Title of the invention : AUSTENITIC ALLOY

(51) International classification :C22C38/42,C22C38/44,C22C38/58
(31) Priority Document No :12151566.2
(32) Priority Date :18/01/2012
(33) Name of priority country :EPO
(86) International Application No :PCT/EP2013/050723
Filing Date :16/01/2013
(87) International Publication No :WO 2013/107763
(61) Patent of Addition to Application Number :NA
Filing Date :NA
(62) Divisional to Application Number :NA
Filing Date :NA

(71)**Name of Applicant :**
1)SANDVIK INTELLECTUAL PROPERTY AB
Address of Applicant :SE 811 81 Sandviken Sweden
(72)**Name of Inventor :**
1)CHAI Guocai
2)HÖGBERG Jan
3)KESSON Sofia
4)FORSBERG Urban

(57) Abstract :
An austenitic alloy comprising (in weight%): C: 0.01 0.05 Si: 0.05 0.80 Mn: 1.5 2 Cr: 26 34.5 Ni: 30 35 Mo: 3 4 Cu: 0.5 1.5 N: 0.05 0.15 V: =0.15 the balance Fe and unavoidable impurities characterized in that 40 = %Ni + 100%N = 50

No. of Pages : 17 No. of Claims : 6

(12) PATENT APPLICATION PUBLICATION
(19) INDIA
(22) Date of filing of Application :25/07/2014
(21) Application No.1578/KOLNP/2014 A
(43) Publication Date : 23/10/2015

(54) Title of the invention : DEVICE FOR OPENING/CLOSING WINGS IN WING BODY VEHICLE

(51) International classification :B60P7/02,B60P7/00
(31) Priority Document No :1020120007322
(32) Priority Date :25/01/2012
(33) Name of priority country :Republic of Korea
(86) International Application No :PCT/KR2013/000601
Filing Date :25/01/2013
(87) International Publication No :WO 2013/111987
(61) Patent of Addition to Application Number :NA
Filing Date :NA
(62) Divisional to Application Number :NA
Filing Date :NA

(71)**Name of Applicant :**
1)LEE Soon Chae
Address of Applicant :104 203 Geobo mansion Bugae dong 42 Subyeon ro 85beon gil Bupyeong gu Incheon 403 807 Republic of Korea
(72)**Name of Inventor :**
1)LEE Soon Chae

(57) Abstract :
The present invention relates to a device for opening/closing wings in a wing body vehicle and the device for opening/closing comprises: one pair of wings which are installed so as to rotate with respect to a frame that is formed on an outer edge of a loading box; and the wing body vehicle comprising an opening/closing device for binding together lower ends of the wings and the frame wherein the opening/closing device comprises a forward/reverse motor which is seated on the frame; an elevating plate which is elevated and lowered vertically by driving the forward/reverse motor for blocking a portion of lower end portions of the wings a close button for elevating the elevating plate and an open button for lowering the elevating plate. According to the present invention an actuation button is operated when the wings are lowered thereby securely fixing the wings and a user can solidly fix or release the wings by using the open button and the close button.

No. of Pages : 15 No. of Claims : 5

(12) PATENT APPLICATION PUBLICATION
(19) INDIA
(22) Date of filing of Application :25/07/2014
(21) Application No.1579/KOLNP/2014 A
(43) Publication Date : 23/10/2015

(54) Title of the invention : OPENING/CLOSING DEVICE FOR LOAD BOX GATE ON FREIGHT VEHICLE

(51) International classification :B60P1/26,B62D33/023
(31) Priority Document No :1020120007326
(32) Priority Date :25/01/2012
(33) Name of priority country :Republic of Korea
(86) International Application No :PCT/KR2013/000606
Filing Date :25/01/2013
(87) International Publication No :WO 2013/111988
(61) Patent of Addition to Application Number :NA
Filing Date :NA
(62) Divisional to Application Number :NA
Filing Date :NA

(71)**Name of Applicant :**
1)LEE Soon Chae
Address of Applicant :104 203(Geobo mansion Buage dong) 42Subyeon ro 85beon gil Bupyeong gu Incheon 403 807 Republic of Korea
(72)**Name of Inventor :**
1)LEE Soon Chae

(57) Abstract :
The present invention relates to an opening/closing device for a load box gate on a freight vehicle and the opening/closing device comprises: the load box defined by a front gate a rear gate and side gates on both sides with a bottom surface at the center a front connection member for connecting the front gate and the side gates and a rear connection member for connecting the rear gate and the side gates. According to the present invention operation of opening or binding the rear gate or the side gates can be automated and random release of the rear gate or the side gates can be prevented.

No. of Pages : 17 No. of Claims : 6

(12) PATENT APPLICATION PUBLICATION
(21) Application No.1679/KOLNP/2014 A
(19) INDIA
(22) Date of filing of Application :13/08/2014
(43) Publication Date : 23/10/2015

(54) Title of the invention : COMPOSITION FOR ENZYMATIC OIL DEGUMMING

(51) International classification :C11B3/00,C11B3/04
(31) Priority Document No :10 2012 003 031.2
(32) Priority Date :17/02/2012
(33) Name of priority country :Germany
(86) International Application No :PCT/EP2013/053199
Filing Date :18/02/2013
(87) International Publication No :WO 2013/121047
(61) Patent of Addition to Application Number :NA
Filing Date :NA
(62) Divisional to Application Number :NA
Filing Date :NA

(71)**Name of Applicant :**
1)CLARIANT PRODUKTE (DEUTSCHLAND) GMBH
Address of Applicant :Brüningstrasse 50 65929 Frankfurt / Main Germany
(72)**Name of Inventor :**
1)SOHLING Ulrich
2)BUBENHEIM Paul
3)SUCK Kirstin

(57) Abstract :
The invention relates to a composition comprising at least one phospholipid cleaving enzyme. The invention further relates to a method for degumming raw oils using the composition according to the invention and to the use of the composition according to the invention to degum raw oils.

No. of Pages : 52 No. of Claims : 10

(12) PATENT APPLICATION PUBLICATION
(21) Application No.1400/KOLNP/2014 A
(19) INDIA
(22) Date of filing of Application :02/07/2014
(43) Publication Date : 23/10/2015

(54) Title of the invention : ANALOG PHASE LOCKED LOOP WITH ENHANCED ACQUISITION

(51) International classification :H03L7/087,H03L7/089,H03L7/10
(31) Priority Document No :11192433.8
(32) Priority Date :07/12/2011
(33) Name of priority country :EPO
(86) International Application No :PCT/EP2012/072638
Filing Date :14/11/2012
(87) International Publication No :WO 2013/083376
(61) Patent of Addition to Application Number :NA
Filing Date :NA
(62) Divisional to Application Number :NA
Filing Date :NA

(71)**Name of Applicant :**
1)TELEFONAKTIEBOLAGET L M ERICSSON (publ)
Address of Applicant :S 164 83 Stockholm Sweden
(72)**Name of Inventor :**
1)EK Staffan

(57) Abstract :
An analog phase locked loop PLL (100 200) is disclosed comprising a voltage controlled oscillator (102 202); a frequency divider (104 204) having its input connected to an output of the VCO; a first phase detector (106 206) arranged to detect a phase difference between an output signal of the frequency divider and a reference frequency signal and provide an output signal based on the phase difference wherein the detectable phase difference is within one cycle of the reference frequency; a first charge pump (108 208) connected to an output of the first phase detector and arranged to output a charge per detected phase error based on the output of the first phase detector; and an analog loop filter (110 210) connected to the first charge pump and arranged to provide a voltage based on the output of the first charge pump to the VCO. The PLL further comprises a second phase detector (112 212 300 400 500) arranged to detect a number of cycles in phase difference between the output signal of the frequency divider and the reference frequency signal and provide an output signal based on the number of cycles in phase difference; and a second charge pump (114 214 600 700) connected to an output of the second phase detector and arranged to provide a charge per detected phase error based on the output of the second phase detector to the loop filter. A radio circuit a communication device and a communication node are also disclosed.

No. of Pages : 26 No. of Claims : 15

(12) PATENT APPLICATION PUBLICATION
(19) INDIA
(22) Date of filing of Application :03/07/2014
(21) Application No.1401/KOLNP/2014 A
(43) Publication Date : 23/10/2015

(54) Title of the invention : DEVICE FOR PREHEATING A FLUID NOTABLY A COMBUSTION ENGINE COOLANT FLUID

(51) International classification :F24H1/12,F02N19/10
(31) Priority Document No :2012/0006
(32) Priority Date :04/01/2012
(33) Name of priority country :Belgium
(86) International Application No :PCT/EP2013/050015
Filing Date :02/01/2013
(87) International Publication No :WO 2013/102629
(61) Patent of Addition to Application Number :NA
Filing Date :NA
(62) Divisional to Application Number :NA
Filing Date :NA

(71)**Name of Applicant :**
1)VOLANTE Nino
Address of Applicant :184 rue de lamitié B 4041 Milmort Belgium
(72)**Name of Inventor :**
1)ZUNE Jean François
2)CARLENS Jean Claude

(57) Abstract :
The invention relates to a device for heating a fluid essentially comprising a heating body with a solid element and one or more electric resistors of rectangular section of the PTC type which are arranged in grooves on the exterior surface of the solid element. The latter comprises a U shaped passage for fluid. The invention also relates to a vehicle engine fitted with such a device for preheating or heating the coolant. The invention also relates to a method for preheating or heating using such a device.

No. of Pages : 15 No. of Claims : 18

(12) PATENT APPLICATION PUBLICATION
(19) INDIA
(22) Date of filing of Application :15/07/2014
(21) Application No.1490/KOLNP/2014 A
(43) Publication Date : 23/10/2015

(54) Title of the invention : PHARMACEUTICAL COMPOSITION CONTAINING CRYSTALLINE SORAFENIB TOSYLATE

(51) International classification :A61K9/20,A61K31/4412,A61K47/20
(31) Priority Document No :61/589518
(32) Priority Date :23/01/2012
(33) Name of priority country :U.S.A.
(86) International Application No :PCT/EP2013/051219
Filing Date :23/01/2013
(87) International Publication No :WO 2013/110644
(61) Patent of Addition to Application Number :NA
Filing Date :NA
(62) Divisional to Application Number :NA
Filing Date :NA

(71)**Name of Applicant :**
1)SANDOZ AG
Address of Applicant :Lichtstrasse 35 CH 4056 Basel Switzerland
(72)**Name of Inventor :**
1)SCHELER Stefan
2)DEGENDORFER Heiko
3)RANEBURGER Johannes
4)SCHWARZ Franz

(57) Abstract :
The present invention relates to an oral solid dosage form in particular a tablet comprising sorafenib tosylate polymorphic form III.

No. of Pages : 39 No. of Claims : 15

(12) PATENT APPLICATION PUBLICATION
(19) INDIA
(22) Date of filing of Application :15/07/2014
(21) Application No.1491/KOLNP/2014 A
(43) Publication Date : 23/10/2015

(54) Title of the invention : SYNTHESIS OF TRIAZOLOPYRIMIDINE COMPOUNDS

(51) International classification	:C07D239/46,C07D317/44,C07D487/04
(31) Priority Document No	:11195508.4
(32) Priority Date	:23/12/2011
(33) Name of priority country	:EPO
(86) International Application No	:PCT/EP2012/076458
Filing Date	:20/12/2012
(87) International Publication No	:WO 2013/092900
(61) Patent of Addition to Application Number	:NA
Filing Date	:NA
(62) Divisional to Application Number	:NA
Filing Date	:NA

(71)**Name of Applicant :**
1)LEK PHARMACEUTICALS D.D.
Address of Applicant :Verovskova 57 1526 Ljubljana Slovenia
(72)**Name of Inventor :**
1)MARAS Nenad
2)GAZIC SMILOVIC Ivana
3)STERK Damjan

(57) Abstract :
The present invention relates to the field of organic synthesis and describes the synthesis of specific intermediates suitable for the preparation of triazolopyrimidine compounds such as ticagrelor.

No. of Pages : 78 No. of Claims : 20

(12) PATENT APPLICATION PUBLICATION
(19) INDIA
(22) Date of filing of Application :13/08/2014
(21) Application No.1681/KOLNP/2014 A
(43) Publication Date : 23/10/2015

(54) Title of the invention : METHOD AND APPARATUS FOR CONTROLLING LOCK/UNLOCK STATE OF TERMINAL THROUGH VOICE RECOGNITION

(51) International classification :H04B1/40,G06F3/16,G10L15/00
(31) Priority Document No :1020120019092
(32) Priority Date :24/02/2012
(33) Name of priority country :Republic of Korea
(86) International Application No :PCT/KR2013/001472
Filing Date :25/02/2013
(87) International Publication No :WO 2013/125916
(61) Patent of Addition to Application Number :NA
Filing Date :NA
(62) Divisional to Application Number :NA
Filing Date :NA

(71)**Name of Applicant :**
1)SAMSUNG ELECTRONICS CO. LTD.
Address of Applicant :129 Samsung ro Yeongtong gu Suwon si Gyeonggi do 443 742 Republic of Korea
(72)**Name of Inventor :**
1)AHN Yu Mi
2)KIM Seon Hwa
3)KIM Hee Woon
4)JEON Ha Young

(57) Abstract :
A method for controlling a terminal through a voice input is provided. The method includes receiving a voice input when the terminal is in a state in which the terminal is locked and performing an operation corresponding to the voice input if the voice input corresponds to a preset command.

No. of Pages : 32 No. of Claims : 30

(12) PATENT APPLICATION PUBLICATION
(19) INDIA
(22) Date of filing of Application :13/08/2014
(21) Application No.1682/KOLNP/2014 A
(43) Publication Date : 23/10/2015

(54) Title of the invention : ADENOVIRAL BASED BIOLOGICAL DELIVERY AND EXPRESSION SYSTEM FOR USE IN THE TREATMENT OF OSTEOARTHRITIS

(51) International classification :C12N15/86,A61K48/00
(31) Priority Document No :12 000 703.4
(32) Priority Date :02/02/2012
(33) Name of priority country :EPO
(86) International Application No :PCT/IB2013/000198
Filing Date :23/01/2013
(87) International Publication No :WO 2013/114199
(61) Patent of Addition to Application Number :NA
Filing Date :NA
(62) Divisional to Application Number :NA
Filing Date :NA

(71)**Name of Applicant :**
1)BAYLOR COLLEGE OF MEDICINE
Address of Applicant :One Baylor Plaza Houston Texas 77030 U.S.A.
(72)**Name of Inventor :**
1)LEE Brendan
2)GUSE Kilian
3)RUAN Zhechao

(57) Abstract :
The invention relates to an adenoviral based biological delivery and expression system for use in the treatment or prevention of osteoathritis in human or mammalian joints by long term inducible gene expression of human or mammalian interleukin 1 receptor antagonist (II 1 Ra) in synovial cells comprising a helper dependent adenoviral vector containing a nucleic acid sequence encoding for human or mammalian interleukin 1 receptor antagonist (II 1 Ra) left and right inverted terminal repeats (L ITR and R ITR) the adenoviral packaging signal and non viral non coding stuffer nucleic acid sequences wherein the expression of the human or mammalian interleukin 1 receptor antagonist (II 1 Ra) gene within synovial cells is regulated by an inflammation inducible promoter.

No. of Pages : 54 No. of Claims : 16

(12) PATENT APPLICATION PUBLICATION
(19) INDIA
(22) Date of filing of Application :28/07/2014
(21) Application No.1588/KOLNP/2014 A
(43) Publication Date : 23/10/2015

(54) Title of the invention : METHOD AND SYSTEM FOR GENERATING SULFUR SEEDS IN A MOVING LIQUID

(51) International classification :B01J2/00,B29B9/00,C01B17/00
(31) Priority Document No :13/363235
(32) Priority Date :31/01/2012
(33) Name of priority country :U.S.A.
(86) International Application No :PCT/US2013/023423
Filing Date :28/01/2013
(87) International Publication No :WO 2013/116148
(61) Patent of Addition to Application Number :NA
Filing Date :NA
(62) Divisional to Application Number :NA
Filing Date :NA

(71)**Name of Applicant :**
1)BRIMROCK INTERNATIONAL INC.
Address of Applicant :P.O. Box 191 Kilgore TX 75663 U.S.A.
(72)**Name of Inventor :**
1)BRIMROCK INTERNATIONAL INC.

(57) Abstract :
Sulfur seeds may be produced by spraying liquid molten sulfur from a sulfur spray nozzle into a moving stream of liquid. Some of the sulfur may pass through the liquid and some of the sulfur may be entrained in and transported by the stream of liquid or all of the sulfur may be entrained in the stream of liquid. The sulfur droplets that are entrained in the stream of liquid may be carried by the liquid to a cooling tank which may be a spiral dewaterer tank with an angled bottom and a screw conveyor. An opening may be made in the bottom surface of the screw conveyor housing of the spiral dewaterer tank for liquid to drain from the screw conveyor as it moves sulfur seeds from the tank to a the drum. A screen may be disposed across the opening and a drain trough attached to the screw conveyor housing to capture any liquid and solids that move through the screen. A wash line may assist in moving solids that pass through the screen.

No. of Pages : 56 No. of Claims : 20

(12) PATENT APPLICATION PUBLICATION
(21) Application No.1589/KOLNP/2014 A
(19) INDIA
(22) Date of filing of Application :28/07/2014
(43) Publication Date : 23/10/2015

(54) Title of the invention : QUALITY OF SERVICE SUPPORT FOR MACHINE TO MACHINE APPLICATIONS

(51) International classification :H04L29/06,H04L29/08
(31) Priority Document No :61/583876
(32) Priority Date :06/01/2012
(33) Name of priority country :U.S.A.
(86) International Application No :PCT/IB2013/050106
Filing Date :04/01/2013
(87) International Publication No :WO 2013/102891
(61) Patent of Addition to Application Number :NA
Filing Date :NA
(62) Divisional to Application Number :NA
Filing Date :NA

(71)**Name of Applicant :**
1)TELEFONAKTIEBOLAGET LM ERICSSON (PUBL)
Address of Applicant :S 164 83 Stockholm Sweden
(72)**Name of Inventor :**
1)FOTI George

(57) Abstract :
A Quality of Service functionality is provided for Machine to machine device communications that allows a single IMS session to support a plurality of different data streams. In one embodiment a single IMS session is used to support a plurality of different data streams that arise from a single application type while in another embodiment a single IMS session is used to support a plurality of different data streams across a plurality of different devices and applications. Through the use of a single IMS session signaling is reduced and QoS can be offered without impacting a large number of nodes. An IMS User Agent is deployed to aid in providing this functionality.

No. of Pages : 28 No. of Claims : 17

(12) PATENT APPLICATION PUBLICATION
(19) INDIA
(22) Date of filing of Application :13/08/2014
(21) Application No.1694/KOLNP/2014 A
(43) Publication Date : 23/10/2015

(54) Title of the invention : INTERACTIVE INTERFACE DISPLAY CONTROL METHOD INSTANT COMMUNICATION TOOL AND COMPUTER STORAGE MEDIUM

(51) International classification :H04L12/58
(31) Priority Document No :201210061874.9
(32) Priority Date :09/03/2012
(33) Name of priority country :China
(86) International Application No :PCT/CN2013/071867
Filing Date :26/02/2013
(87) International Publication No :WO 2013/131434
(61) Patent of Addition to Application Number :NA
Filing Date :NA
(62) Divisional to Application Number :NA
Filing Date :NA

(71)**Name of Applicant :**
1)TENCENT TECHNOLOGY (SHENZHEN) COMPANY LIMITED
Address of Applicant :Room 403 East Block2 SEG Park Zhenxing Road Futian District Shenzhen Guangdong 518044 China
(72)**Name of Inventor :**
1)LI Zhongnan
2)JIN Xin
3)LI Lei
4)WANG Wenxiang
5)DING Yida
6)WANG Wentao
7)ZENG Shourun
8)CHEN Yan
9)CHEN Junbiao
10)YANG Guang
11)XIAN Yecheng
12)WU Zurong
13)GAO Shundong
14)LIN Yehui

(57) Abstract :
An interactive interface display control method comprises the following steps: obtaining a contact person list and information about each friend in the contact person list; generating a segment corresponding to the friend in the contact person list; and displaying the information about the friend in the segment. The interactive interface display control method the instant communication tool and the computer storage medium generate a corresponding segment for each friend in a contact person list and then display the information about the friend in the segment. A user can directly view the information about the friend through the segment in an interface thereby simplifying operations and increasing the operation convenience.

No. of Pages : 31 No. of Claims : 15

(12) PATENT APPLICATION PUBLICATION
(19) INDIA
(22) Date of filing of Application :13/08/2014
(21) Application No.1695/KOLNP/2014 A
(43) Publication Date : 23/10/2015

(54) Title of the invention : TURBOCHARGER

(51) International classification :F01D21/04,F02C6/12
(31) Priority Document No :1203111.8
(32) Priority Date :23/02/2012
(33) Name of priority country :U.K.
(86) International Application No :PCT/GB2013/050197
Filing Date :30/01/2013
(87) International Publication No :WO 2013/124614
(61) Patent of Addition to Application Number :NA
Filing Date :NA
(62) Divisional to Application Number :NA
Filing Date :NA

(71)**Name of Applicant :**
1)NAPIER TURBOCHARGERS LIMITED
Address of Applicant :PO Box 1 Ruston House Waterside South Lincoln Lincolnshire LN5 7FD U.K.
(72)**Name of Inventor :**
1)PINKEY Ian
2)KAY Peter
3)MOORE Matthew Elijah
4)HEYES Francis Joseph Geoffrey

(57) Abstract :
A turbocharger has a casing system which houses a centrifugal impeller connected to a turbine by a shaft. The casing system includes an insert casing which forms a duct for feeding air to and through the impeller and a volute casing which forms a volute for receiving compressed air from the impeller the insert casing inserting into the volute casing. The casing system further includes a main casing which forms a housing for the shaft and for the shaft side end of the impeller. The impeller includes a hub which has a radially outer annular rim and has a front face and a rear face which converge towards the rim from respectively the inlet side and the shaft side of the hub. The impeller further includes a plurality of circumferentially arranged vanes on the front face of the hub. The impeller further includes a seal formation formed on the rear face at the rim. The casing system further includes a seal plate having a corresponding seal formation which sealingly interacts with the impeller seal formation. The seal plate extends inboard from the rim to an attachment flange which attaches to the main casing and extends outboard from the rim to carry or form a rear wall of an annular passage directing compressed air from the impeller to the volute. The thickness of the seal plate is narrowed in an annular waist region adjacent the rim. The thickness of the waist region is less than 2.5 times the minimum thickness as measured in the axial direction of the rim.

No. of Pages : 17 No. of Claims : 11

(12) PATENT APPLICATION PUBLICATION
(19) INDIA
(22) Date of filing of Application :30/07/2014
(21) Application No.1596/KOLNP/2014 A
(43) Publication Date : 23/10/2015

(54) Title of the invention : TIME DIFFERENCE SAFETY BRAKE

(51) International classification :B62L3/08,B62L1/00
(31) Priority Document No :201210169884.4
(32) Priority Date :28/05/2012
(33) Name of priority country :China
(86) International Application No :PCT/CN2012/083352
Filing Date :23/10/2012
(87) International Publication No :WO 2013/177892
(61) Patent of Addition to Application Number :NA
Filing Date :NA
(62) Divisional to Application Number :NA
Filing Date :NA

(71)**Name of Applicant :**
1)CHANG Jui Lung
Address of Applicant :19F No.13 Sec. 3 Dongmen Road East District Tainan City Taiwan China
(72)**Name of Inventor :**
1)CHANG Jui Lung

(57) Abstract :
A time difference safety brake (100) comprises a first bearing type braking mechanism (1) and a second bearing type braking mechanism (2). The first bearing type braking mechanism (1) comprises a first bearing member (11) a first cushion sliding member (12) and a first brake pulling member (13). The first bearing type braking mechanism (1) rotates from a first start position (P1) as a result of pulling of the first brake pulling member (13). The second bearing type braking mechanism (2) comprises a second bearing member (21) a second cushion sliding member (22) and a second brake pulling member (23). The second bearing type braking mechanism (2) rotates from a second start position (P1) as a result of pulling of the second brake pulling member (23) to implement brake. The first cushion sliding member (12) and the second cushion sliding member (22) slide relative to each other and there is a sliding cushion space therebetween so that the first cushion sliding member (12) rotates and slides to an end lock (S1) of the sliding cushion space as a result of the pulling thereby braking through the lock.

No. of Pages : 12 No. of Claims : 10

(12) PATENT APPLICATION PUBLICATION
(19) INDIA
(22) Date of filing of Application :14/08/2014
(21) Application No.1697/KOLNP/2014 A
(43) Publication Date : 23/10/2015

(54) Title of the invention : METAL MATERIAL AND SURFACE TREATMENT METHOD AND DEVICE

(51) International classification :C23C26/00,B23H1/00,C25D3/02
(31) Priority Document No :2012038553
(32) Priority Date :24/02/2012
(33) Name of priority country :Japan
(86) International Application No :PCT/JP2013/054413
Filing Date :21/02/2013
(87) International Publication No :WO 2013/125658
(61) Patent of Addition to Application Number :NA
Filing Date :NA
(62) Divisional to Application Number :NA
Filing Date :NA

(71)**Name of Applicant :**
1)JFE STEEL CORPORATION
Address of Applicant :2 3 Uchisaiwai cho 2 chome Chiyoda ku Tokyo 1000011 Japan
(72)**Name of Inventor :**
1)NAGOSHI Masayasu
2)SATO Kaoru
3)NORO Hisato
4)BABA Kazuhiko
5)WATANABE Seiichi
6)YOSHIDA Souki

(57) Abstract :
22A metal material is provided with a metal material base (2) and a reforming layer formed on the surface of the metal material base (2) wherein the reforming layer has an average of three or more protrusions (3) in a 10 µm range the protrusions protruding from the surface of the metal material base (2) and having an average diameter of 1 µm or less when viewed from a direction that is perpendicular to the surface of the metal material base (2). Preferably the reforming layer is provided with an average of one or more of the following protrusions in a 10 µm range that is a protrusion provided with a base part protruding from the surface of the metal material base (2) and a tip part formed on the end of the base part and having a constricted structure in which the outer diameter of the base part is smaller than the outer diameter of the tip part and an average diameter of 1 µm or less when viewed from a direction that is perpendicular to the surface of the metal material base (2). As a consequence it is possible to provide a metal material exhibiting new features such as hydrophilic property and light emitting property.

No. of Pages : 68 No. of Claims : 18

(12) PATENT APPLICATION PUBLICATION
(21) Application No.1699/KOLNP/2014 A
(19) INDIA
(22) Date of filing of Application :14/08/2014
(43) Publication Date : 23/10/2015

(54) Title of the invention : CODING CONCEPT ALLOWING PARALLEL PROCESSING TRANSPORT DEMULTIPLEXER AND VIDEO BITSTREAM

(51) International classification :H04N7/26
(31) Priority Document No :61/588849
(32) Priority Date :20/01/2012
(33) Name of priority country :U.S.A.
(86) International Application No :PCT/EP2013/051043
Filing Date :21/01/2013
(87) International Publication No :WO 2013/107906
(61) Patent of Addition to Application Number :NA
Filing Date :NA
(62) Divisional to Application Number :NA
Filing Date :NA

(71)**Name of Applicant :**
1)FRAUNHOFER GESELLSCHAFT ZUR FÖRDERUNG DER ANGEWANDTEN FORSCHUNG E.V.
Address of Applicant :Hansastraße 27c 80686 München Germany
(72)**Name of Inventor :**
1)SCHIERL Thomas
2)GEORGE Valeri
3)GRÜNEBERG Karsten
4)KIRCHHOFFER Heiner
5)HENKEL Anastasia
6)MARPE Detlev

(57) Abstract :
A raw byte sequence payload describing a picture in slices WPP substreams or tiles and coded using context adaptive binary arithmetic coding is subdivided or chopped into tranches with continuing the context adaptive binary arithmetic coding probability adaptation across tranche boundaries. By this measure tranche boundaries additionally introduced within slices WPP substreams or tiles do not lead to a reduction in the entropy coding efficiency of these elements. On the other hand however the tranches are smaller than the original slices WPP substreams or tiles and accordingly they may be transmitted earlier i.e. with lower delay than the un chopped original entities i.e. slices WPP substreams or tiles. In accordance with another aspect which is combinable with the first aspect substream marker NAL units are used within a sequence of NAL units of a video bitstream in order to enable a transport demultiplexer to assign data of slices within NAL units to the corresponding substreams or tiles so as to be able to in parallel serve a multithreaded decoder with the corresponding substreams or tiles.

No. of Pages : 49 No. of Claims : 29

(12) PATENT APPLICATION PUBLICATION
(19) INDIA
(22) Date of filing of Application :29/07/2014
(21) Application No.1592/KOLNP/2014 A
(43) Publication Date : 23/10/2015

(54) Title of the invention : COATED CUTTING TOOL

(51) International classification :C23C14/06,C23C28/00,C23C30/00
(31) Priority Document No :12157471.9
(32) Priority Date :29/02/2012
(33) Name of priority country :EPO
(86) International Application No :PCT/EP2013/053807
Filing Date :26/02/2013
(87) International Publication No :WO 2013/127786
(61) Patent of Addition to Application Number :NA
Filing Date :NA
(62) Divisional to Application Number :NA
Filing Date :NA

(71)**Name of Applicant :**
1)SANDVIK INTELLECTUAL PROPERTY AB
Address of Applicant :S 811 81 Sandviken Sweden
(72)**Name of Inventor :**
1)ERICSSON Björn

(57) Abstract :
zone Czone BThe present invention relates to a coated cutting tool comprising a substrate and a multilayered (Ti AI)N coating. The coating comprises three zones: a first zone (A) closest to the substrate a second zone (B) adjacent to the first zone and a third outermost zone (C). All three zones each comprises a multilayered aperiodic structure of (Ti AI)N where the average composition for each zone is different from each other and where the ratio between the thickness of the zone C and zone B is between 1.3 and 2.2 and where z >Z where z is the average composition for each zone of the ratio z=Ti/AI. The coating has a low residual stress.

No. of Pages : 16 No. of Claims : 11

(12) PATENT APPLICATION PUBLICATION
(19) INDIA
(22) Date of filing of Application :29/07/2014
(21) Application No.1593/KOLNP/2014 A
(43) Publication Date : 23/10/2015

(54) Title of the invention : IMPROVED PROCESS FOR PREPARING 4 AMINODIPHENYLAMINE

(51) International classification :C07C209/78
(31) Priority Document No :NA
(32) Priority Date :NA
(33) Name of priority country :NA
(86) International Application No :PCT/IB2012/051059
Filing Date :07/03/2012
(87) International Publication No :WO 2013/132290
(61) Patent of Addition to Application Number :NA
Filing Date :NA
(62) Divisional to Application Number :NA
Filing Date :NA

(71)**Name of Applicant :**
1)NOCIL LIMITED
Address of Applicant :Mafatlal House H.T. Parekh Marg Backbay Reclamation Churchgate Mumbai 400 020 Maharashtra India
(72)**Name of Inventor :**
1)NANDI Chinmoy
2)GANGAL Narendra
3)PUROHIT Pramod
4)KETKAR Vinay
5)KASHELIKAR Dilip

(57) Abstract :
A process for preparing 4 aminodiphenylamine (4 ADPA) comprising steps of coupling of aniline with nitrobenzene in presence of a suitable base e.g. tetramethylammonium hydroxide (TMAH) hydrogenation of the coupling mass phase separation hydrogenation of azobenzene in the separated organic mass and fractional distillation for 4 ADPA recovery. An improvement in 4 ADPA recovery and a lowering of tar formation are obtained due to azobenzene reduction prior to 4 ADPA isolation. Also a gain in volume productivity of 4 ADPA is obtained by suitably altering the batch cycle time of the coupling reaction.

No. of Pages : 35 No. of Claims : 47

(12) PATENT APPLICATION PUBLICATION
(19) INDIA
(22) Date of filing of Application :14/08/2014
(21) Application No.1701/KOLNP/2014 A
(43) Publication Date : 23/10/2015

(54) Title of the invention : FUNNEL PART AND METHOD FOR MANUFACTURING PACKAGING CONTAINER USING FUNNEL PART

(51) International classification :B65D83/06,B31B49/00,B31C1/06
(31) Priority Document No :2012020021
(32) Priority Date :01/02/2012
(33) Name of priority country :Japan
(86) International Application No :PCT/JP2012/008418
Filing Date :28/12/2012
(87) International Publication No :WO 2013/114516
(61) Patent of Addition to Application Number :NA
Filing Date :NA
(62) Divisional to Application Number :NA
Filing Date :NA

(71)**Name of Applicant :**
1)TOPPAN PRINTING CO. LTD.
Address of Applicant :1 5 1 Taito Taito ku Tokyo 1108560 Japan
(72)**Name of Inventor :**
1)SAITO Takeshi
2)KANEYUKI Shinji
3)SASAKI Noriyuki
4)SADA Jyun

(57) Abstract :
Provided are a funnel part and a method for manufacturing a packaging container in which the funnel part is used. The funnel part is manufactured using: a step for curving a blank to form a tapered first intermediate body; a step for folding back and welding the opening on the narrow opening side of the first intermediate body to form a second intermediate body; a step for folding back the opening on the wide opening side of the second intermediate body to the outer side to form a third intermediate body having a side wall portion; and a step for drawing the third intermediate body and forming a cylindrical exhaust part constituting the narrow opening side opening a first tapered taper part connected to the exhaust part and a second tapered taper part having a taper angle smaller than that of the first taper part. The packaging container is manufactured using: a step for forming a cup shaped container body having a cylindrical side wall a bottom and an open end; and a step for orienting the wide opening side opening of the funnel part toward the bottom of the container body inserting the funnel part from through the open end of the container body toward the interior and joining the outer surface of the side wall to the inner circumferential surface of the funnel part.

No. of Pages : 60 No. of Claims : 14

(12) PATENT APPLICATION PUBLICATION
(19) INDIA
(22) Date of filing of Application :14/08/2014
(21) Application No.1702/KOLNP/2014 A
(43) Publication Date : 23/10/2015

(54) Title of the invention : FABRIC FOR USE IN COMPOSITE MATERIALS AND METHOD FOR PRODUCING SAID FABRIC AND A COMPOSITE MATERIAL BODY

(51) International classification	:D03D19/00,B29C70/22,D04H3/04
(31) Priority Document No	:NA
(32) Priority Date	:NA
(33) Name of priority country	:NA
(86) International Application No	:PCT/EP2012/053569
Filing Date	:01/03/2012
(87) International Publication No	:WO 2013/127460
(61) Patent of Addition to Application Number	:NA
Filing Date	:NA
(62) Divisional to Application Number	:NA
Filing Date	:NA

(71)**Name of Applicant :**
1)GROZ BECKERT KG
Address of Applicant :Parkweg 2 72458 Albstadt Germany
(72)**Name of Inventor :**
1)BISCHOFF Thomas
2)AFSAR Melike

(57) Abstract :
The present invention relates to a fabric (10) for use in composite materials and composite material bodies. The fabric (10) has a reinforcing system (11) made of reinforcing warp threads (13) and reinforcing weft threads (14) which are placed on top of one other in two different reinforcing layers (16) (17) without binding and represent a core so to speak. The reinforcing threads (13) (14) are formed from a reinforcing yarn (15). A binding system (12) of binding warp threads (20) and binding weft threads (21) is formed from a binding yarn (30) with a lower yarn count than the reinforcing yarn (15). The fabric is bound exclusively within the binding system (12). The reinforcing system (11) is enclosed between the binding warp threads (20) on the one side and the binding weft threads (21) on the other side and thus held in place. Binding points (22) are provided in the binding system (12). At each binding point (22) a binding warp thread (20) is guided and held between a stationary warp thread (25) and a regular warp thread (24) of a warp thread pair (23) of binding warp threads (20). Between two adjacent binding points of a warp thread pair (23) the stationary warp thread (25) and the regular warp thread (24) have at least one intersecting point (26). All warp threads (13) (20) run in one warp thread direction (K) substantially parallel to one another. All weft threads (14) (21) run in one weft thread direction (S) substantially parallel to one another and transverse to the warp thread direction (K).

No. of Pages : 30 No. of Claims : 15

(12) PATENT APPLICATION PUBLICATION
(19) INDIA
(22) Date of filing of Application :02/07/2014
(21) Application No.1398/KOLNP/2014 A
(43) Publication Date : 23/10/2015

(54) Title of the invention : A RADIO COMMUNICATION SYSTEM FOR ASSIGNING A SHORT LIVED C RNTI

(51) International classification :H04W8/26
(31) Priority Document No :NA
(32) Priority Date :NA
(33) Name of priority country :NA
(86) International Application No :PCT/EP2012/050041
Filing Date :03/01/2012
(87) International Publication No :WO 2013/102489
(61) Patent of Addition to Application Number :NA
Filing Date :NA
(62) Divisional to Application Number :NA
Filing Date :NA

(71)**Name of Applicant :**
1)TELEFONAKTIEBOLAGET L M ERICSSON (publ)
Address of Applicant :SE 164 83 Stockholm Sweden
(72)**Name of Inventor :**
1)MIKLÓS György
2)ERIKSSON Erik
3)RUNE Johan
4)SACHS Joachim
5)TURÁNYI Zoltán
6)WIBERG Niclas

(57) Abstract :
A radio communication system (100) and a method in therein for assigning a short lived Cell Radio Network Temporary Identifier C RNTI to a first user equipment (110) performing random access to a radio network node (130) are provided. The radio communication system (100) registers (303 312) the first user equipment (110) as connected to the radio network node (130). A message for synchronizing the radio network node (130) and the first user equipment (110) with respect to the first time period is transferred. After the first time period has elapsed the radio communication system (100) maintains (305 314) the first user equipment (110) connected to the radio network node (130) and allows (306) the short lived C RNTI to be assigned to a second user equipment (120). Furthermore a first user equipment (110) for enabling assignment of a short lived C RNTI to the first user equipment (110) performing random access to a radio network node (130) and a method therein and a radio network node for assigning a short lived C RNTI to a first user equipment (110) performing random access to the radio network node (130) and a method therein are provided.

No. of Pages : 52 No. of Claims : 20

(12) PATENT APPLICATION PUBLICATION
(19) INDIA
(22) Date of filing of Application :02/07/2014

(21) Application No.1399/KOLNP/2014 A
(43) Publication Date : 23/10/2015

(54) Title of the invention : INTEGRATED MICROWAVE BACKHAUL SUPPORT IN CELLULAR PRODUCTS

(51) International classification	:H04W88/08,H04W92/04,H04W72/12
(31) Priority Document No	:13/313611
(32) Priority Date	:07/12/2011
(33) Name of priority country	:U.S.A.
(86) International Application No	:PCT/IB2012/056027
Filing Date	:30/10/2012
(87) International Publication No	:WO 2013/084088
(61) Patent of Addition to Application Number	:NA
Filing Date	:NA
(62) Divisional to Application Number	:NA
Filing Date	:NA

(71)**Name of Applicant :**
1)TELEFONAKTIEBOLAGET L M ERICSSON (PUBL)
Address of Applicant :SE 164 83 S 164 83 Stockholm Sweden
(72)**Name of Inventor :**
1)COMEAU Adrien Joseph

(57) Abstract :
A method for integrating functions of a cellular radio controller and a microwave backhaul radio controller are disclosed. In some embodiments a cellular baseband unit is coupled to a cellular radio unit and a microwave backhaul radio unit The cellular baseband unit includes a digital signal processor that performs modulation demodulation and scheduling for both the cellular radio signals and the microwave backhaul radio signals.

No. of Pages : 23 No. of Claims : 20

(12) PATENT APPLICATION PUBLICATION
(19) INDIA
(22) Date of filing of Application :14/08/2014
(21) Application No.1708/KOLNP/2014 A
(43) Publication Date : 23/10/2015

(54) Title of the invention : METHOD FOR ROLLING A MATERIAL STRIP

(51) International classification :B21B37/22,B21B37/50
(31) Priority Document No :12161767.4
(32) Priority Date :28/03/2012
(33) Name of priority country :EPO
(86) International Application No :PCT/EP2013/055656
Filing Date :19/03/2013
(87) International Publication No :WO 2013/143914
(61) Patent of Addition to Application Number :NA
Filing Date :NA
(62) Divisional to Application Number :NA
Filing Date :NA

(71)**Name of Applicant :**
1)SIEMENS AKTIENGESELLSCHAFT
Address of Applicant :Wittelsbacherplatz 2 80333 München Germany
(72)**Name of Inventor :**
1)BURGER Rainer
2)KOTZIAN Daniel

(57) Abstract :
The invention relates to a method for rolling a material strip (4) by means of a plurality of rolling stands (2.1 to 2.7) arranged one behind another and loop lifters (3.1 to 3.6) arranged between the rolling stands (2.1 to 2.7). In this case during the transport of the material strip (4) through the rolling stands (2.1 to 2.7) for at least one strip end section of the material strip (4) at least one width difference (b10 to b60) between a current width (b0 to b6 b10 to b60) of the strip end section and a current width (b0 to b6 b10 to b60) of a strip section of the material strip (4) that is adjacent to the strip end section is continuously determined. If the strip end section is located entirely or partially between two rolling stands (2.1 to 2.7) a strip tension (s1 to s6) in the strip end section is set by means of a loop lifter (3.1 to 3.6) arranged there depending on a determined width difference (b10 to b60) in such a manner that said width difference (b10 to b60) is reduced.

No. of Pages : 23 No. of Claims : 8

(12) PATENT APPLICATION PUBLICATION
(21) Application No.1709/KOLNP/2014 A
(19) INDIA
(22) Date of filing of Application :14/08/2014
(43) Publication Date : 23/10/2015

(54) Title of the invention : SHIFT SELECT DEVICE FOR A TRANSMISSION

(51) International classification :F16H61/36
(31) Priority Document No :61/633,813
(32) Priority Date :17/02/2012
(33) Name of priority country :U.S.A.
(86) International Application No :PCT/IB2013/000209
Filing Date :18/02/2013
(87) International Publication No :WO 2013/121278
(61) Patent of Addition to Application Number :NA
Filing Date :NA
(62) Divisional to Application Number :NA
Filing Date :NA

(71)**Name of Applicant :**
1)KONGSBERG AUTOMOTIVE AS
Address of Applicant :Dyrmyrgata 48, NO-3611 Kongsberg NORWAY Norway
(72)**Name of Inventor :**
1)NORHEIM, Daniel

(57) Abstract :
A transmission for a vehicle includes a gearbox and a shift select. The gearbox includes a plurality of gears and a shift select shaft. The shift select device includes a housing and a shift lever engaging the shift select shaft. The shift select device also includes a select lever including a spindle coupled to the housing and extending along a spindle axis. The select lever also includes an exterior lever coupled to the spindle. The select lever further includes an interior lever having a first end coupled to the spindle and movable along the spindle axis between an installation position and an operational position. The interior lever also has a second end coupled to the shift select shaft when the first end is in the operational and a second end spaced from the shift select shaft when the first end is in the installation position.

No. of Pages : 37 No. of Claims : 31

(12) PATENT APPLICATION PUBLICATION
(19) INDIA
(22) Date of filing of Application :17/07/2014
(21) Application No.1509/KOLNP/2014 A
(43) Publication Date : 23/10/2015

(54) Title of the invention : ELECTROSPUN POROUS MEDIA

(51) International classification :B01D69/10,B01D69/06,B01D71/36
(31) Priority Document No :61/591555
(32) Priority Date :27/01/2012
(33) Name of priority country :U.S.A.
(86) International Application No :PCT/US2013/023073
Filing Date :25/01/2013
(87) International Publication No :WO 2013/112793
(61) Patent of Addition to Application Number :NA
Filing Date :NA
(62) Divisional to Application Number :NA
Filing Date :NA

(71)**Name of Applicant :**
1)ZEUS INDUSTRIAL PRODUCTS INC.
Address of Applicant :3737 Industrial Blvd. Orangeburg SC 29118 U.S.A.
(72)**Name of Inventor :**
1)BALLARD Robert L.
2)ANNEAUX Bruce L.
3)MANASCO Joshua L.
4)GARNER David P.
5)HAO Ping

(57) Abstract :
Espun material may function as a filtration medium or be put to other uses. The espun material may comprise espun poly (tetrafluoroethylene) (espun PTFE). One or more layers of the espun material may be included. The properties of the espun material can be tailored. For example a gradient fabric may include espun PTFE. The gradient fabric may include two or more layers of espun PTFE.

No. of Pages : 79 No. of Claims : 65

(12) PATENT APPLICATION PUBLICATION
(21) Application No.1510/KOLNP/2014 A
(19) INDIA
(22) Date of filing of Application :17/07/2014
(43) Publication Date : 23/10/2015

(54) Title of the invention : TUNNELLING OR EXTRACTION MACHINE WITH AN ANCHOR SETTING DEVICE AND SUPPORT MANIPULATOR OR SUPPORTING DEVICE

(51) International classification :E21C27/24,E21D9/10,E21D11/40
(31) Priority Document No :A 75/2012
(32) Priority Date :24/01/2012
(33) Name of priority country :Austria
(86) International Application No :PCT/AT2013/000011
Filing Date :24/01/2013
(87) International Publication No :WO 2013/110104
(61) Patent of Addition to Application Number :NA
Filing Date :NA
(62) Divisional to Application Number :NA
Filing Date :NA

(71)**Name of Applicant :**
1)SANDVIK MINING AND CONSTRUCTION G.M.B.H.
Address of Applicant :Alpinestrasse 1 A 8740 Zeltweg Austria
(72)**Name of Inventor :**
1)WELS Franz
2)PIRKER Bernd

(57) Abstract :
In a tunnelling or extraction machine comprising cutting tools (4) which are movable over the heading face and are arranged on a boom (2) and a platform (10) which is movable in the longitudinal direction of the machine and carries roof support devices the roof support devices comprise a support manipulator (13) or a supporting device (40) and an anchor boring and anchor setting device (14) wherein the anchor boring and anchor setting device (14) is fastened to the movable platform (10) so as to be pivotable between a parked position and an operating position and the support manipulator (13) or the supporting device (40) has a telescopic arm (16) which is fastened to the movable platform (10) in a vertically pivotable manner wherein the support manipulator (13) or the supporting device (40) and the anchor boring and anchor setting device (14) are fastened to the movable platform (10) at a predefined fixed distance apart from one another and are displaceable together with the movable platform (10) between a retracted position and a forwardly displaced position.

No. of Pages : 25 No. of Claims : 15

(12) PATENT APPLICATION PUBLICATION
(19) INDIA
(22) Date of filing of Application :31/07/2014
(21) Application No.1604/KOLNP/2014 A
(43) Publication Date : 23/10/2015

(54) Title of the invention : TANDEM BICYCLE

(51) International classification :B62K 3/12
(31) Priority Document No :61/593,718
(32) Priority Date :01/02/2012
(33) Name of priority country :U.S.A.
(86) International Application No :PCT/US2013/024315
Filing Date :01/02/2013
(87) International Publication No :WO 2013/116626
(61) Patent of Addition to Application Number :NA
Filing Date :NA
(62) Divisional to Application Number :NA
Filing Date :NA

(71)**Name of Applicant :**
1)RAYMOND, SHAWN, C.
Address of Applicant :460 ALGER DRIVE, PALO ALTO, CA 93406 UNITED STATES OF AMERICA U.S.A.
(72)**Name of Inventor :**
1)RAYMOND, SHAWN, C.

(57) Abstract :
A tandem bicycle is provided that have a shortened wheel base between the front and rear wheels that allows a rider to ride comfortably alone from either the front or rear seats, or with a passenger in the front seat. The frame length of the inventive tandem bicycle is comparable to a standard single seat bicycle. The reduced proximity between riders, and the ability to steer for both the front or rear seats on the inventive tandem bicycle improves the level of participation and interaction between the riders. The wheelbase is reduced by bringing the front wheel closer to the front seat position. A reduced diameter front wheel is provided to accommodate rotational clearance of the front pedals thereby allowing two riders to ride on bicycle frame with a length common to single rider bicycle.

No. of Pages : 19 No. of Claims : 15

(12) PATENT APPLICATION PUBLICATION
(19) INDIA
(22) Date of filing of Application :18/08/2014
(21) Application No.1714/KOLNP/2014 A
(43) Publication Date : 23/10/2015

(54) Title of the invention : PHARMACEUTICAL COMPOSITION FOR TREATMENT AND/OR PREVENTION OF CANCER

(51) International classification :C07K16/30,A61K39/395,A61P35/00
(31) Priority Document No :2012035342
(32) Priority Date :21/02/2012
(33) Name of priority country :Japan
(86) International Application No :PCT/JP2013/054312
Filing Date :21/02/2013
(87) International Publication No :WO 2013/125630
(61) Patent of Addition to Application Number :NA
Filing Date :NA
(62) Divisional to Application Number :NA
Filing Date :NA

(71)**Name of Applicant :**
1)TORAY INDUSTRIES INC.
Address of Applicant :1 1 Nihonbashi Muromachi 2 chome Chuo ku Tokyo 1038666 Japan
(72)**Name of Inventor :**
1)KOBAYASHI Shinichi
2)OKANO Fumiyoshi
3)SAITO Takanori

(57) Abstract :
The present invention discloses an antibody that targets a cancer antigen protein expressed specifically on the surface of cancer cells and the application of the antibody in a treatment and/or preventative agent for said cancer. Specifically disclosed are: an antibody or a fragment thereof said antibody being immunologically reactive with a partial polypeptide of CAPRIN 1 comprising the amino acid sequence represented by SEQ ID NO: 5 or an amino acid sequence having 80% or more sequence identity to the amino acid sequence represented by SEQ ID NO: 5; and a pharmaceutical composition for the treatment and/or prevention of cancer said pharmaceutical composition being characterized by containing as an active ingredient the antibody or a fragment thereof.

No. of Pages : 86 No. of Claims : 11

(12) PATENT APPLICATION PUBLICATION
(19) INDIA
(22) Date of filing of Application :18/07/2014
(21) Application No.1525/KOLNP/2014 A
(43) Publication Date : 23/10/2015

(54) Title of the invention : USER EQUIPMENT NETWORK NODE AND METHOD FOR APPLYING POWER SCALING TO UPLINK TRANSMISSIONS

(51) International classification :H04W52/34,H04W52/28
(31) Priority Document No :61/591940
(32) Priority Date :29/01/2012
(33) Name of priority country :U.S.A.
(86) International Application No :PCT/SE2012/050629
Filing Date :12/06/2012
(87) International Publication No :WO 2013/112089
(61) Patent of Addition to Application Number :NA
Filing Date :NA
(62) Divisional to Application Number :NA
Filing Date :NA

(71)**Name of Applicant :**
1)TELEFONAKTIEBOLAGET L M ERICSSON (PUBL)
Address of Applicant :S 164 83 Stockholm Sweden
(72)**Name of Inventor :**
1)BALDEMAIR Robert
2)LARSSON Daniel
3)CHENG Jung Fu
4)FRENNE Mattias

(57) Abstract :
Embodiments herein relate to a method in a user equipment (900) for applying power scaling to uplink transmissions in a multiple cell communications network which user equipment (900) is configured to transmit over a plurality of aggregated cells in uplink to a network node (800). The user equipment (900) receives from the network node (800) timing advance information for uplink one or more aggregated cells of the plurality of aggregated cells. The user equipment (900) applies a power scaling to uplink transmissions of at least one aggregated cell based on the received timing advance information The at least one aggregated cell is associated with the user equipment (900) and is a cell of the multiple cell communications network.

No. of Pages : 53 No. of Claims : 36

(12) PATENT APPLICATION PUBLICATION
(21) Application No.1727/KOLNP/2014 A
(19) INDIA
(22) Date of filing of Application :18/08/2014
(43) Publication Date : 23/10/2015

(54) Title of the invention : FIR/IIR FILTER PREDISTORTER FOR POWER AMPLIFIERS EXHIBITING SHORT TERM AND/OR LONG TERM MEMORY EFFECTS

(51) International classification :H04B1/04
(31) Priority Document No :13/407205
(32) Priority Date :28/02/2012
(33) Name of priority country :U.S.A.
(86) International Application No :PCT/IB2013/050279
Filing Date :11/01/2013
(87) International Publication No :WO 2013/128300
(61) Patent of Addition to Application Number :NA
Filing Date :NA
(62) Divisional to Application Number :NA
Filing Date :NA

(71)**Name of Applicant :**
1)TELEFONAKTIEBOLAGET L M ERICSSON (PUBL)
Address of Applicant :164 83 Stockholm Stockholm Sweden
(72)**Name of Inventor :**
1)KILAMBI Sai Mohan
2)ZHANG Yuxing
3)BAI Chunlong

(57) Abstract :
The present disclosure generally relates to predistortion that compensates for non linearity of a power amplifier as well as short term and long term memory effects of the power amplifier. In one embodiment a transmitter includes a power amplifier that amplifies a power amplifier input signal to provide a power amplifier output signal a predistortion sub system that effects predistortion of the power amplifier input signal to compensate for non linearity of the power amplifier and memory effects of the power amplifier and a adaptation sub system that adaptively configures the predistortion sub system. The predistortion sub system includes a memory less predistortion component that compensates for the non linearity of the power amplifier a Finite Impulse Response (FIR) filter that compensates for short term memory effects of the power amplifier and an Infinite Impulse Response (IIR) filter that compensates for long term memory effects of the power amplifier.

No. of Pages : 23 No. of Claims : 25

(12) PATENT APPLICATION PUBLICATION
(19) INDIA
(22) Date of filing of Application :18/08/2014
(21) Application No.1728/KOLNP/2014 A
(43) Publication Date : 23/10/2015

(54) Title of the invention : A TRANSMITTING RADIO NODE A RECEIVING RADIO NODE AND METHODS THEREIN FOR HANDLING DATA PACKETS WITHIN A RADIO BEARER

(51) International classification :H04W72/00
(31) Priority Document No :NA
(32) Priority Date :NA
(33) Name of priority country :NA
(86) International Application No :PCT/SE2012/050078
Filing Date :26/01/2012
(87) International Publication No :WO 2013/112084
(61) Patent of Addition to Application Number :NA
Filing Date :NA
(62) Divisional to Application Number :NA
Filing Date :NA

(71)**Name of Applicant :**
1)TELEFONAKTIEBOLAGET L M ERICSSON (PUBL)
Address of Applicant :S 164 83 Stockholm Sweden
(72)**Name of Inventor :**
1)ERIKSSON Ann Christine
2)STJERNHOLM Paul
3)VOIGT Lotta

(57) Abstract :
Embodiments herein relate to a method in a transmitting radio node (12) for handling data packets within a radio bearer in a radio communications network (1). The transmitting radio node (12) sets up within a radio bearer a logical sub channel for each of at least two identified packet flows. The transmitting radio node (12) associates an identity to each data packet of respective identified packet flow where the identity is indicating the logical sub channel of the respective identified traffic flow. The transmitting radio node (12) transfers the data packets of respective identified packet flow in an order over a channel in the radio communications network (1) where the order of transferring is based on the identity of each data packet.

No. of Pages : 41 No. of Claims : 28

(12) PATENT APPLICATION PUBLICATION
(19) INDIA
(22) Date of filing of Application :18/08/2014
(21) Application No.1729/KOLNP/2014 A
(43) Publication Date : 23/10/2015

(54) Title of the invention : METHODS FOR SELECTING PRECODING VECTORS FOR MULTI POINT MIMO (MULTIPLE INPUT MULTIPLE OUTPUT) COMMUNICATIONS AND RELATED WIRELESS TERMINALS AND RADIO NETWORK NODES

(51) International classification :H04B7/06,H04B7/04,H04B7/02
(31) Priority Document No :61/591307
(32) Priority Date :27/01/2012
(33) Name of priority country :U.S.A.
(86) International Application No:PCT/SE2013/050022
Filing Date :15/01/2013
(87) International Publication No :WO 2013/112097
(61) Patent of Addition to Application Number :NA
Filing Date :NA
(62) Divisional to Application Number :NA
Filing Date :NA

(71)**Name of Applicant :**
1)TELEFONAKTIEBOLAGET L M ERICSSON (PUBL)
Address of Applicant :S 164 83 Stockholm Sweden
(72)**Name of Inventor :**
1)NAMMI Sairamesh
2)VON WRYCZA Peter
3)MIAO Qingyu

(57) Abstract :
A wireless terminal may receive multiple input multiple output (MIMO) downlink communications from a wireless communication network including a plurality of base station sector antenna arrays using a codebook of precoding vectors. MIMO downlink communications may be received from the wireless communication. When receiving the MIMO downlink communications as multi point MIMO downlink communications from first and second base station sector antenna arrays of the plurality of base station sector antenna arrays a precoding vector may be selected for the multi point MIMO downlink communications from only a subset of the precoding vectors of the codebook.

No. of Pages : 70 No. of Claims : 20

(12) PATENT APPLICATION PUBLICATION
(21) Application No.1436/KOLNP/2014 A
(19) INDIA
(22) Date of filing of Application :08/07/2014
(43) Publication Date : 23/10/2015

(54) Title of the invention : AUDIO DATA PROCESSING METHOD DEVICE AND SYSTEM

(51) International classification :G10L19/00,G10L21/02
(31) Priority Document No :201110455836.7
(32) Priority Date :30/12/2011
(33) Name of priority country :China
(86) International Application No :PCT/CN2012/087812
Filing Date :28/12/2012
(87) International Publication No :WO 2013/097764
(61) Patent of Addition to Application Number :NA
Filing Date :NA
(62) Divisional to Application Number :NA
Filing Date :NA

(71)**Name of Applicant :**
1)HUAWEI TECHNOLOGIES CO. LTD.
Address of Applicant :Huawei Administration Building Bantian Longgang Shenzhen Guangdong 518129 China
(72)**Name of Inventor :**
1)WANG Zhe

(57) Abstract :
The present invention relates to the technical field of communications. Disclosed are an audio data processing method device and system. The method comprises: obtaining a noise frame of an audio signal and resolving the current noise frame into a noise low band signal and a noise high band signal; coding and transmitting the low band signal according to a first discontinuous transmission mechanism; and coding and transmitting the high band signal according to a second discontinuous transmission mechanism. According to the present invention by processing the high band signal and low band signal in different manners the computation complexity is lowered and coding bits are saved without reducing the subjective quality of a codec; the saved bits contribute to a lower transmission bandwidth or higher overall coding quality.

No. of Pages : 86 No. of Claims : 45

(12) PATENT APPLICATION PUBLICATION
(19) INDIA
(22) Date of filing of Application :20/08/2014
(21) Application No.1743/KOLNP/2014 A
(43) Publication Date : 23/10/2015

(54) Title of the invention : FIBER OPTIC CONNECTOR FIBER OPTIC CONNECTOR AND CABLE ASSEMBLY AND METHODS FOR MANUFACTURING

(51) International classification :G02B6/38,G02B6/02
(31) Priority Document No :61/600915
(32) Priority Date :20/02/2012
(33) Name of priority country :U.S.A.
(86) International Application No :PCT/US2013/026904
Filing Date :20/02/2013
(87) International Publication No :WO 2013/126429
(61) Patent of Addition to Application Number :NA
Filing Date :NA
(62) Divisional to Application Number :NA
Filing Date :NA

(71)**Name of Applicant :**
1)ADC TELECOMMUNICATIONS INC.
Address of Applicant :1050 Westlakes Drive Berwyn PA 19312 U.S.A.
(72)**Name of Inventor :**
1)OTT Michael James
2)HUEGERICH Thomas P.
3)ZIMMEL Steven C.
4)NHEP Ponharith

(57) Abstract :
A fiber optic cable and connector assembly including a fiber optic connector mounted at the end of a fiber optic cable. The fiber optic connector includes a ferrule assembly including a stub fiber supported within a ferrule. The stub fiber is fusion spliced to an optical fiber of the fiber optic cable at a location within the fiber optic connector.

No. of Pages : 141 No. of Claims : 117

(12) PATENT APPLICATION PUBLICATION
(21) Application No.1744/KOLNP/2014 A
(19) INDIA
(22) Date of filing of Application :20/08/2014
(43) Publication Date : 23/10/2015

(54) Title of the invention : PROCESS AND DEVICE FOR TREATING VOLATILE ORGANIC COMPOUND

(51) International classification :B01D5/00
(31) Priority Document No :201210092287.6
(32) Priority Date :31/03/2012
(33) Name of priority country :China
(86) International Application No :PCT/CN2012/001485
Filing Date :02/11/2012
(87) International Publication No :WO 2013/143044
(61) Patent of Addition to Application Number :NA
Filing Date :NA
(62) Divisional to Application Number :NA
Filing Date :NA

(71)**Name of Applicant :**
1)CHENG YUAN ENVIRONMENTAL TECHNOLOGY CO. LTD.
Address of Applicant :1F.NO. 7 Alley 10 Lane 88 Yongsing Street Taoyuan Taoyuan City Taiwan 33055 China
(72)**Name of Inventor :**
1)LIN Yicheng

(57) Abstract :
Disclosed are a process and a device for treating a volatile organic compound. The process comprises a dew point temperature sensing step for sensing the dew point temperature of the atmosphere as a reference temperature; a humidifying and condensing step for spraying water mist such that the waste gas flow is humidified and condensed so as to generate a condensed liquid comprising the volatile organic compound; a condensed dew point temperature sensing step for sensing the temperature of the condensed gas flow; a liquid droplet collecting step for collecting liquid droplets dripping from the humidifying and condensing step and using the collected liquid droplets for cyclic spraying so as to humidify and condense; and a controlling step for controlling the temperature of the condensed gas flow close to the reference temperature. The present invention has the effect of improving the recovered concentration of the volatile organic compound for recycling with nearly no production of waste water and also the effect of washing the suspension particles.

No. of Pages : 17 No. of Claims : 8

(12) PATENT APPLICATION PUBLICATION
(19) INDIA
(22) Date of filing of Application :20/08/2014
(21) Application No.1745/KOLNP/2014 A
(43) Publication Date : 23/10/2015

(54) Title of the invention : ODOR ADSORBENT MATERIAL ODOR DETECTION KIT AND METHOD FOR USING SAME

(51) International classification :G01N33/00,B01D53/04,B01J20/26
(31) Priority Document No :2012204369
(32) Priority Date :18/09/2012
(33) Name of priority country :Japan
(86) International Application No :PCT/JP2013/002038
Filing Date :26/03/2013
(87) International Publication No :WO 2014/045478
(61) Patent of Addition to Application Number :NA
Filing Date :NA
(62) Divisional to Application Number :NA
Filing Date :NA

(71)**Name of Applicant :**
1)SUNTORY HOLDINGS LIMITED
Address of Applicant :2 1 40 Dojimahama Kita ku Osaka shi Osaka 5308203 Japan
2)TOPPAN PRINTING CO. LTD.
(72)**Name of Inventor :**
1)NAKADA Takiko
2)TAJIMA Ryoichi
3)YOSHINAGA Masanobu

(57) Abstract :
The present invention provides an odor adsorbent material an odor detection kit and a method for using the same and allows for quicker identification of equipment to which an odor component is adhering among equipment used in a distribution channel for goods. An odor adsorbing kit is disposed in the equipment said odor adsorbing kit including at least two pieces of odor adsorbent material a package which is formed by at least two storage portions and stores the odor adsorbent material and a sheet. At least one piece of the odor adsorbent material is exposed to the space inside the equipment and is sealed and stored after recovery. During inspection odor components adsorbed by each piece of odor adsorbent material are compared and the presence of an odor in the equipment is determined.

No. of Pages : 21 No. of Claims : 16

(12) PATENT APPLICATION PUBLICATION
(19) INDIA
(22) Date of filing of Application :10/07/2014
(21) Application No.1448/KOLNP/2014 A
(43) Publication Date : 23/10/2015

(54) Title of the invention : APPARATUS AND METHOD FOR USE WITH AN AMPLIFIER CIRCUIT

(51) International classification :H03F1/02
(31) Priority Document No :61/576065
(32) Priority Date :15/12/2011
(33) Name of priority country :U.S.A.
(86) International Application No :PCT/EP2012/060322
Filing Date :31/05/2012
(87) International Publication No :WO 2013/087232
(61) Patent of Addition to Application Number :NA
Filing Date :NA
(62) Divisional to Application Number :NA
Filing Date :NA

(71)**Name of Applicant :**
1)TELEFONAKTIEBOLAGET LM ERICSSON (publ)
Address of Applicant :SE 164 83 Stockholm Sweden
(72)**Name of Inventor :**
1)HELLBERG Richard

(57) Abstract :
An output network for use with a multi transistor amplifier circuit comprises N transistors configured to provide a Chireix outphasing behaviour. The N transistors coupled to receive different amplitude and/or phase signals relative to a source signal. The output network comprises: a plurality of branches arranged in a hierarchical structure between N input nodes and an output node; at least one branch connection arranged between the input nodes and the output node wherein each branch connection is arranged to couple first and second branches from an input side to a single branch on an output side. The hierarchical structure is arranged asymmetrically such that at least one branch connection comprises a different number of input nodes ultimately connected to its first branch compared to the number of input nodes ultimately connected to its second branch.

No. of Pages : 37 No. of Claims : 14

(12) PATENT APPLICATION PUBLICATION
(21) Application No.1651/KOLNP/2014 A
(19) INDIA
(22) Date of filing of Application :08/08/2014
(43) Publication Date : 23/10/2015

(54) Title of the invention : METAL MATERIAL SURFACE TREATMENT METHOD AND METAL MATERIAL

(51) International classification :C23C26/00,B23H1/00,C25D5/26
(31) Priority Document No :2012038556
(32) Priority Date :24/02/2012
(33) Name of priority country :Japan
(86) International Application No :PCT/JP2013/054412
Filing Date :21/02/2013
(87) International Publication No :WO 2013/125657
(61) Patent of Addition to Application Number :NA
Filing Date :NA
(62) Divisional to Application Number :NA
Filing Date :NA

(71)**Name of Applicant :**
1)JFE STEEL CORPORATION
Address of Applicant :2 3 Uchisaiwai cho 2 chome Chiyoda ku Tokyo 1000011 Japan
(72)**Name of Inventor :**
1)NAGOSHI Masayasu
2)SATO Kaoru
3)BABA Kazuhiko
4)NORO Hisato
5)WATANABE Seiichi
6)YOSHIDA Souki

(57) Abstract :
A metal material surface treatment method involves: a step for immersing in an electrolyte solution an anode electrode and a material to be treated functioning as a cathode electrode and formed from a metal material having a surface to be treated; a step for applying between the cathode electrode and the anode electrode a voltage (A) equal to or greater than 70 V and within a voltage range in which the cathode electrode does not oxidize or dissolve; and a step for applying between the cathode electrode and the anode electrode a voltage (B) which is within the aforementioned voltage range and which is different from voltage (A) by 5 V or more. As a consequence it is possible to impart new functions to the surface of a metal material without expending much effort or cost.

No. of Pages : 37 No. of Claims : 7

(12) PATENT APPLICATION PUBLICATION
(19) INDIA
(22) Date of filing of Application :08/08/2014

(21) Application No.1652/KOLNP/2014 A
(43) Publication Date : 23/10/2015

(54) Title of the invention : ROTARY PISTON

(51) International classification :F01C21/08,F04C2/12,F04C13/00
(31) Priority Document No :10 2012 003 287.0
(32) Priority Date :20/02/2012
(33) Name of priority country :Germany
(86) International Application No :PCT/EP2013/053271
Filing Date :19/02/2013
(87) International Publication No :WO 2013/124269
(61) Patent of Addition to Application Number :NA
Filing Date :NA
(62) Divisional to Application Number :NA
Filing Date :NA

(71)**Name of Applicant :**
1)NETZSCH PUMPEN & SYSTEME GMBH
Address of Applicant :Gebrueder Netzsch Strasse 19 95100 Selb Germany
2)SÜDDEUTSCHE GELENKSCHEIBENFABRIK GMBH & CO. KG
(72)**Name of Inventor :**
1)ROLAND Liessel
2)NINDEL Wolfgang
3)MURRENHOFF Bernhard
4)KURZ Robert
5)DENK Reinhard
6)STRASSL Josef
7)BOEHME Thomas
8)KAMAL Hisham
9)WEIGL Stefan
10)WILLIS Roger
11)KERN Stefan
12)KREIDL Johann
13)HERR Gunther
14)VERHOEVEN Marcel
15)KNEIDL Franz
16)TEKNEYAN Mikael
17)GRADL Matthias
18)WEBER Erwin

(57) Abstract :
The present invention relates to a rotary piston (10) for a rotary piston pump wherein the rotary piston (10) comprises at least one supporting body (12) through which the axis of rotation D of the rotary piston (10) extends and at least one end cap portion (14 16) which is arranged radially outwards of the at least one supporting body (12) and is connected flexibly preferably elastically to the at least one supporting body (12).

No. of Pages : 43 No. of Claims : 15

(12) PATENT APPLICATION PUBLICATION
(19) INDIA
(22) Date of filing of Application :21/08/2014
(21) Application No.1758/KOLNP/2014 A
(43) Publication Date : 23/10/2015

(54) Title of the invention : POWER SUPPLY CONTROL DEVICE

(51) International classification :H02P29/02
(31) Priority Document No :2012025097
(32) Priority Date :08/02/2012
(33) Name of priority country :Japan
(86) International Application No :PCT/JP2013/051195
Filing Date :22/01/2013
(87) International Publication No :WO 2013/118574
(61) Patent of Addition to Application Number :NA
Filing Date :NA
(62) Divisional to Application Number :NA
Filing Date :NA

(71)**Name of Applicant :**
1)DAIKIN INDUSTRIES LTD.
Address of Applicant :Umeda Center Building 4 12 Nakazaki Nishi 2 Chome Kita ku Osaka shi Osaka 5308323 Japan
(72)**Name of Inventor :**
1)NAKASHITA Yuuko
2)YAGI Satoshi

(57) Abstract :
The purpose of the invention is to provide a power supply control device that reliably stops the operation of a compressor when an abnormality occurs in the compressor. A compressor inverter (28) has a plurality of transistors (Q28a to Q28f) and turns on or off the transistors (Q28a to Q28f) to generate driving voltages (SU1 to SW1) for driving a compressor motor (M2) and output the driving voltages (SU1 to SW1) to the compressor motor (M2). A compressor microcomputer (30) controls the compressor inverter (28). A switching power supply unit (24) generates a first power supply (V1) supplied to the compressor microcomputer (30). When an abnormality occurs in a compressor a power supply control switch (S25) stops the switching power supply unit (24) from generating the first power supply (V1) thereby stopping the control by the compressor microcomputer (30).

No. of Pages : 32 No. of Claims : 4

(12) PATENT APPLICATION PUBLICATION
(19) INDIA
(22) Date of filing of Application :07/08/2014
(21) Application No.1645/KOLNP/2014 A
(43) Publication Date : 23/10/2015

(54) Title of the invention : POLYPROPYLENE COMPOSITION COMBINING SOFTNESS TOUGHNESS LOW HAZE AND HIGH THERMAL RESISTANCE

(51) International classification :C08L23/10,C08L23/12,C08L23/14
(31) Priority Document No :12157066.7
(32) Priority Date :27/02/2012
(33) Name of priority country :EPO
(86) International Application No :PCT/EP2013/053767
Filing Date :26/02/2013
(87) International Publication No :WO 2013/127760
(61) Patent of Addition to Application Number :NA
Filing Date :NA
(62) Divisional to Application Number :NA
Filing Date :NA

(71)**Name of Applicant :**
1)BOREALIS AG
Address of Applicant :IZD Tower Wagramerstraße 17 19 A 1220 Vienna Austria
(72)**Name of Inventor :**
1)REICHELT Kristin
2)HAKOLA Sameli
3)RESCONI Luigi

(57) Abstract :
5 12The present invention relates to a polypropylene composition comprising comonomer units derived from ethylene in an amount of from 1.5 wt% to 35wt% and from at least one C alpha olefin in an amount of from 1.0 mol% to 3.0 mol% wherein the polypropylene composition has an amount of xylene solubles XS of at least 40 wt% and the xylene solubles have an amount of ethylene derived comonomer units of from 4.0 wt% to 70 wt%.

No. of Pages : 34 No. of Claims : 13

(12) PATENT APPLICATION PUBLICATION
(19) INDIA
(22) Date of filing of Application :07/08/2014
(21) Application No.1646/KOLNP/2014 A
(43) Publication Date : 23/10/2015

(54) Title of the invention : PAD RETENTION SYSTEM OF A DISC BRAKE OF A MOTOR VEHICLE

(51) International classification :F16D55/226,F16D65/097
(31) Priority Document No :10 2012 002 734.6
(32) Priority Date :10/02/2012
(33) Name of priority country :Germany
(86) International Application No :PCT/EP2013/052276
Filing Date :06/02/2013
(87) International Publication No :WO 2013/117561
(61) Patent of Addition to Application Number :NA
Filing Date :NA
(62) Divisional to Application Number :NA
Filing Date :NA

(71)**Name of Applicant :**
1)KNORR BREMSE SYSTEME FÜR NUTZFAHRZEUGE GMBH
Address of Applicant :Moosacher Str. 80 80809 München Germany
(72)**Name of Inventor :**
1)BAUMGARTNER Johann
2)PESCHEL Michael
3)WERTH Alexander

(57) Abstract :
A pad retention system of a disc brake of a motor vehicle in particular of a utility vehicle has a brake caliper (1) which engages over a brake disc a brake carrier (1) which is positionally fixed on the vehicle said brake carrier having entry side and exit side carrier lugs (2 3) and having a bridge part (4) which connects the carrier lugs (2 3) to one another at least one brake pad (5) which is provided with a pad carrier plate (51) and a friction pad fastened thereto and which is guided in a pad slot (7) formed by the carrier lugs (2 3) and by the bridge part (4) wherein at least one of the carrier lugs (2 3) of the pad carrier (1) and the support surface adjacent thereto of the pad carrier plate (51) can be fixed to one another in a positively locking manner with play wherein the at least one brake pad (5) is held in the pad slot (7) under spring loading exerted by a pad retention spring (6) which extends transversely with respect to the axial direction of the brake disc and which is radially deflectable on the brake pad (5) wherein the at least one pad retention spring (6) is arranged such that the pad retention spring (6) in the assembled state presses the brake pad (5) away from the bridge part (4) of the brake carrier (1) and against the carrier lugs (2 3) without play.

No. of Pages : 17 No. of Claims : 8

(12) PATENT APPLICATION PUBLICATION
(21) Application No.1649/KOLNP/2014 A
(19) INDIA
(22) Date of filing of Application :07/08/2014
(43) Publication Date : 23/10/2015

(54) Title of the invention : METHOD AND DEVICE FOR SUPPLYING FILTER MATERIAL TO A FILTER ROD FORMING MACHINE

(51) International classification :A24D3/02
(31) Priority Document No :BO2012A000106
(32) Priority Date :05/03/2012
(33) Name of priority country :Italy
(86) International Application No :PCT/IB2013/051745
Filing Date :05/03/2013
(87) International Publication No :WO 2013/132434
(61) Patent of Addition to Application Number :NA
Filing Date :NA
(62) Divisional to Application Number :NA
Filing Date :NA

(71)**Name of Applicant :**
1)MONTRADE S.R.L.
Address of Applicant :Via Armando Sarti 6 I 40132 Bologna Italy
(72)**Name of Inventor :**
1)GIANNINI Antonella
2)MONZONI Alberto

(57) Abstract :
A method and a device for supplying filter material to a filter rod forming machine (5) having a peripheral axial portion and a central axial portion according to which a flat band (7) of filter material obtained working a single tow is longitudinally cut in at least two strips (39) each of which is fed to a respective pneumatic device (31) adapted to transform the respective strip (39) in a respective cord; the cords (40) being then fed to an inlet (4) of the forming machine (5) at positions evenly distributed about the central axial portion for forming the peripheral axial portion.

No. of Pages : 23 No. of Claims : 25

(12) PATENT APPLICATION PUBLICATION
(19) INDIA
(22) Date of filing of Application :21/08/2014
(21) Application No.1762/KOLNP/2014 A
(43) Publication Date : 23/10/2015

(54) Title of the invention : AIR CHARGING AND DISCHARGING CONTROL DEVICE FOR AIR SPRING SUPPORT SYSTEM

(51) International classification :G05D16/20
(31) Priority Document No :NA
(32) Priority Date :NA
(33) Name of priority country :NA
(86) International Application No :PCT/CN2012/072244
Filing Date :13/03/2012
(87) International Publication No :WO 2013/134921
(61) Patent of Addition to Application Number :NA
Filing Date :NA
(62) Divisional to Application Number :NA
Filing Date :NA

(71)**Name of Applicant :**
1)QINGDAO SIFANG ROLLING STOCK RESEARCH INSTITUTE CO. LTD
Address of Applicant :231 Ruichang Road Sifang District Qingdao Shandong 266031 China
(72)**Name of Inventor :**
1)SHI Jun
2)ZHENG Hui
3)ZHANG Hua
4)WANG Lei

(57) Abstract :
Disclosed is an air charging and discharging control device for an air spring support system the control device comprising a site control box (1) and an indoor control box (2). An air charging electromagnetic valve (3) and an air discharging electromagnetic valve (4) are mounted in the site control box (1). A PLC controller is mounted in the indoor control box (2) and the PLC controller is electrically connected with the air charging electromagnetic valve (3) and the air discharging electromagnetic valve (4) respectively and is electrically connected with a pressure transmitter (5) which is arranged on an additional air chamber (9) of the air spring support system. By controlling the actions of the air charging electromagnetic valve (3) and the air discharging electromagnetic valve (4) with the PLC controller air is charged into and discharged from the air spring support system so that the air spring support system has different inflation pressures and static support for different vehicle weights is realized.

No. of Pages : 16 No. of Claims : 8

(12) PATENT APPLICATION PUBLICATION
(19) INDIA
(22) Date of filing of Application :20/08/2014
(21) Application No.1753/KOLNP/2014 A
(43) Publication Date : 23/10/2015

(54) Title of the invention : USER EQUIPMENT RADIO BASE STATION AND METHODS FOR CONTROLLING A TIME ALIGNMENT TIMER

(51) International classification :H04W56/00
(31) Priority Document No :61/592055
(32) Priority Date :30/01/2012
(33) Name of priority country :U.S.A.
(86) International Application No :PCT/SE2013/050074
Filing Date :30/01/2013
(87) International Publication No :WO 2013/115715
(61) Patent of Addition to Application Number :NA
Filing Date :NA
(62) Divisional to Application Number :NA
Filing Date :NA

(71)**Name of Applicant :**
1)TELEFONAKTIEBOLAGET L M ERICSSON (PUBL)
Address of Applicant :SE 164 83 Stockholm Sweden
(72)**Name of Inventor :**
1)BERGSTRÖM Mattias
2)WITTBERG Mikael

(57) Abstract :
Embodiments herein relate to a method performed by a user equipment (10) for controlling a time alignment timer associated with at least one secondary cell SCell wherein the user equipment (10) being configured with a primary cell PCell and the at least one SCell. The user equipment (10) prevents a TA timer associated with the at least one SCell from starting if a TA timer associated with the PCell is not running.

No. of Pages : 52 No. of Claims : 6

(12) PATENT APPLICATION PUBLICATION
(19) INDIA
(22) Date of filing of Application :20/08/2014
(21) Application No.1754/KOLNP/2014 A
(43) Publication Date : 23/10/2015

(54) Title of the invention : DATA TRANSMISSION SCHEDULING USING ENERGY CONSUMPTION PROFILE OF TERMINAL DEVICE

(51) International classification :H04W72/12
(31) Priority Document No :NA
(32) Priority Date :NA
(33) Name of priority country :NA
(86) International Application No :PCT/EP2012/052946
Filing Date :21/02/2012
(87) International Publication No :WO 2013/123978
(61) Patent of Addition to Application Number :NA
Filing Date :NA
(62) Divisional to Application Number :NA
Filing Date :NA

(71)**Name of Applicant :**
1)TELEFONAKTIEBOLAGET L M ERICSSON (PUBL)
Address of Applicant :S 16483 Stockholm Sweden
(72)**Name of Inventor :**
1)RUNE Johan
2)WALLÉN Anders
3)WILHELMSSON Leif

(57) Abstract :
For controlling energy consumption associated with data transmission between a terminal device (200) and a mobile network a node of the mobile network which is responsible for scheduling the data transmission e.g. a base station (100) or a control node (300) obtains an energy consumption profile of the terminal device (200). The energy consumption profile specifies characteristics of multiple energy sinks in the terminal device (200). On the basis of the energy consumption profile the node performs scheduling of the data transmission.

No. of Pages : 37 No. of Claims : 32

(12) PATENT APPLICATION PUBLICATION
(19) INDIA
(22) Date of filing of Application :21/08/2014
(21) Application No.1755/KOLNP/2014 A
(43) Publication Date : 23/10/2015

(54) Title of the invention : INTEGRATED STRUCTURE ELECTRO HYDRAULIC VALVE

(51) International classification :F15B13/04,F15B13/044,F16K31/04
(31) Priority Document No :61/602583
(32) Priority Date :23/02/2012
(33) Name of priority country :U.S.A.
(86) International Application No :PCT/US2012/065545
Filing Date :16/11/2012
(87) International Publication No :WO 2013/126105
(61) Patent of Addition to Application Number :NA
Filing Date :NA
(62) Divisional to Application Number :NA
Filing Date :NA

(71)**Name of Applicant :**
1)MOOG INC.
Address of Applicant :Seneca Jamison Road East Aurora NY 14052 U.S.A.
(72)**Name of Inventor :**
1)KOPP John
2)MAZURKIEWICZ Christopher

(57) Abstract :
The improved servovalve broadly (20) includes: a body (21) having an axis of elongation (y y) a portion of the body defining a cylinder (43) having an axis (x x) substantially perpendicular to the body axis; a valve member (44) movably mounted in the cylinder and adapted to be moved off null in either direction along the cylinder axis to selectively meter the flows of fluid between a plurality of ports defined between the spool and cylinder; a rotor (58) mounted on the body for rotation about the body axis; a motor (69) acting between the body and rotor and selectively operable to cause the rotor to rotate in a desired angular direction relative to the body; and a quill like transfer member (64) acting between the rotor and valve spool.

No. of Pages : 17 No. of Claims : 26

(12) PATENT APPLICATION PUBLICATION
(21) Application No.1756/KOLNP/2014 A
(19) INDIA
(22) Date of filing of Application :21/08/2014
(43) Publication Date : 23/10/2015

(54) Title of the invention : METHOD FOR INHIBITING GENERATION OF METHANE CONTAINING GAS FROM SEDIMENT OF WATER AREA

(51) International classification :C02F11/00,B09B1/00,E02B1/00
(31) Priority Document No :2012067777
(32) Priority Date :23/03/2012
(33) Name of priority country :Japan
(86) International Application No :PCT/JP2013/001555
Filing Date :11/03/2013
(87) International Publication No:WO 2013/140742
(61) Patent of Addition to Application Number :NA
Filing Date :NA
(62) Divisional to Application Number :NA
Filing Date :NA

(71)**Name of Applicant :**
1)JFE STEEL CORPORATION
Address of Applicant :2 3 Uchisaiwai cho 2 chome Chiyoda ku Tokyo 1000011 Japan
(72)**Name of Inventor :**
1)MIYATA Yasuhito
2)HAYASHI Akio

(57) Abstract :
Provided is a method in which the sediment in a water area where a methane containing gas is apt to generate from the sediment can be stably inhibited from generating a methane containing gas over a long period by laying a sediment modifier on the sediment. The method which is for inhibiting the generation of a methane containing gas by laying a sediment modifier on the sediment of a water area where a methane containing gas generates comprises laying a sediment modifier on the sediment of the water area the sediment modifier comprising steelmaking slag that has a total iron content of 10 mass% or higher and having a content of granulated blast furnace slag of 0 mass% or higher but less than 20 mass%.

No. of Pages : 43 No. of Claims : 9

(12) PATENT APPLICATION PUBLICATION
(19) INDIA
(22) Date of filing of Application :21/08/2014
(21) Application No.1757/KOLNP/2014 A
(43) Publication Date : 23/10/2015

(54) Title of the invention : SINTERING MACHINE IGNITION APPARATUS AND SINTERING MACHINE

(51) International classification :F27B21/08,C22B1/20,F23D14/22
(31) Priority Document No :2012076358
(32) Priority Date :29/03/2012
(33) Name of priority country :Japan
(86) International Application No :PCT/JP2013/000371
Filing Date :25/01/2013
(87) International Publication No :WO 2013/145515
(61) Patent of Addition to Application Number :NA
Filing Date :NA
(62) Divisional to Application Number :NA
Filing Date :NA

(71)**Name of Applicant :**
1)JFE STEEL CORPORATION
Address of Applicant :2 3 Uchisaiwai cho 2 chome Chiyoda ku Tokyo 1000011 Japan
(72)**Name of Inventor :**
1)MIYATA Hiroomi
2)TAKEUCHI Shinobu
3)SOUMA Fuyuki

(57) Abstract :
A sintering machine ignition apparatus having: a fuel gas passage extending in the width direction of the pallet of a sintering machine; air gas passages extending on both sides of the fuel gas passage with the fuel gas passage therebetween; burners having multiple pairs of nozzle holes which open in the direction in which the outflow of fuel gas from the fuel gas passage and the outflow of combustion air from the air passage intermingle and are provided separated in the lengthwise direction of the fuel gas passage and the air passage; and a burner hood covering the combustion environment beneath the nozzle holes. The burners are formed by welding stainless steel plates.

No. of Pages : 27 No. of Claims : 5

(12) PATENT APPLICATION PUBLICATION
(21) Application No.1658/KOLNP/2014 A
(19) INDIA
(22) Date of filing of Application :08/08/2014
(43) Publication Date : 23/10/2015

(54) Title of the invention : ENCODING HYBRID AUTOMATIC REPEAT REQUEST ACKNOWLEDGEMENTS IN A MULTI ANTENNA WIRELESS COMMUNICATIONS SYSTEM

(51) International classification :H04L1/16
(31) Priority Document No :61/706845
(32) Priority Date :28/09/2012
(33) Name of priority country :U.S.A.
(86) International Application No :PCT/SE2013/050624
Filing Date :30/05/2013
(87) International Publication No :WO 2014/051491
(61) Patent of Addition to Application Number :NA
Filing Date :NA
(62) Divisional to Application Number :NA
Filing Date :NA

(71)**Name of Applicant :**
1)TELEFONAKTIEBOLAGET L M ERICSSON (PUBL)
Address of Applicant :SE 164 83 Stockholm Sweden
(72)**Name of Inventor :**
1)NAMMI Sairamesh
2)LIDIAN Namir

(57) Abstract :
There is provided a method performed by a User Equipment UE for encoding Hybrid Automatic Repeat Request HARQ Acknowledgements ACK/NACK in a multi antenna wireless communications system. The method comprises the step (S1) of bundling also referred to as co representing a HARQ ACK/NACK to be sent in response for a transport block of information with a HARQ ACK/NACK to be sent in response for another transport block of information when more than two transport blocks of information are used. The method also comprises the step (S2) of encoding the bundled HARQ ACK/NACK information.

No. of Pages : 93 No. of Claims : 32

(12) PATENT APPLICATION PUBLICATION
(19) INDIA
(22) Date of filing of Application :11/08/2014
(21) Application No.1659/KOLNP/2014 A
(43) Publication Date : 23/10/2015

(54) Title of the invention : PLATINUM/PALLADIUM ZEOLITE CATALYST

(51) International classification :B01J29/068,B01J35/00,B01J37/02
(31) Priority Document No :10 2012 003 032.0
(32) Priority Date :17/02/2012
(33) Name of priority country :Germany
(86) International Application No :PCT/EP2013/053185
Filing Date :18/02/2013
(87) International Publication No :WO 2013/121041
(61) Patent of Addition to Application Number :NA
Filing Date :NA
(62) Divisional to Application Number :NA
Filing Date :NA

(71)**Name of Applicant :**
1)CLARIANT PRODUKTE (DEUTSCHLAND) GMBH
Address of Applicant :Brüningstrasse 50 65929 Frankfurt / Main Germany
(72)**Name of Inventor :**
1)TISSLER Arno
2)ENDLER Mika
3)MÜLLER Patrick
4)REZNIKOV Grigory
5)WEILERMANN Florian
6)SCHUSCHKE Margit
7)STEIN Andane
8)KLOSE Frank

(57) Abstract :
The invention relates to a method for producing a bimetallic catalyst containing palladium and platinum on a zeolitic carrier material to a bimetallic catalyst that can be obtained by means of the method and to the use of the catalyst in oxidation catalysis.

No. of Pages : 26 No. of Claims : 17

(12) PATENT APPLICATION PUBLICATION
(21) Application No.1765/KOLNP/2014 A
(19) INDIA
(22) Date of filing of Application :22/08/2014
(43) Publication Date : 23/10/2015

(54) Title of the invention : CATALYST ELECTRODE LAYER AND METHOD FOR PRODUCING SAME

(51) International classification :H01M4/86,H01M4/88,H01M8/02
(31) Priority Document No :2012044209
(32) Priority Date :29/02/2012
(33) Name of priority country :Japan
(86) International Application No :PCT/JP2013/055141
Filing Date :27/02/2013
(87) International Publication No :WO 2013/129478
(61) Patent of Addition to Application Number :NA
Filing Date :NA
(62) Divisional to Application Number :NA
Filing Date :NA

(71)**Name of Applicant :**
1)TOKUYAMA CORPORATION
Address of Applicant :1 1 Mikage cho Shunan shi Yamaguchi 7458648 Japan
(72)**Name of Inventor :**
1)WATANABE Shin
2)FUKUTA Kenji
3)INOUE Fumie

(57) Abstract :
[Problem] To provide a catalyst electrode layer which has excellent durability and is easily controlled with respect to the crosslinking degree. [Solution] Provided is a catalyst electrode layer which is characterized by containing a catalyst for electrodes and an anion conducting elastomer that is obtained by introducing a quaternary base type anion exchange group into at least some aromatic rings in a copolymer of an aromatic vinyl compound and a conjugated diene compound or in a copolymer that is obtained by saturating some or all of the double bonds in the main chain by hydrogenating the conjugated diene part of the above mentioned copolymer in said anion conducting elastomer at least some quaternary base type anion exchange groups forming a crosslinked structure.

No. of Pages : 53 No. of Claims : 10

(12) PATENT APPLICATION PUBLICATION
(19) INDIA
(22) Date of filing of Application :22/08/2014
(21) Application No.1766/KOLNP/2014 A
(43) Publication Date : 23/10/2015

(54) Title of the invention : PHASE COHERENCE CONTROL FOR HARMONIC SIGNALS IN PERCEPTUAL AUDIO CODECS

(51) International classification :G10L19/02
(31) Priority Document No :61/603773
(32) Priority Date :27/02/2012
(33) Name of priority country :U.S.A.
(86) International Application No :PCT/EP2013/053831
Filing Date :26/02/2013
(87) International Publication No :WO 2013/127801
(61) Patent of Addition to Application Number :NA
Filing Date :NA
(62) Divisional to Application Number :NA
Filing Date :NA

(71)**Name of Applicant :**
1)FRAUNHOFER GESELLSCHAFT ZUR FÖRDERUNG DER ANGEWANDTEN FORSCHUNG E.V.
Address of Applicant :Hansastraße 27c 80686 München Germany
(72)**Name of Inventor :**
1)DISCH Sascha
2)HERRE Jürgen
3)EDLER Bernd
4)NAGEL Frederik

(57) Abstract :
A decoder for decoding an encoded audio signal to obtain a phase adjusted audio signal is provided. The decoder comprises a decoding unit (1 10) and a phase adjustment unit (120). The decoding unit (110) is adapted to decode the encoded audio signal to obtain a decoded audio signal. The phase adjustment unit (120) is adapted to adjust the decoded audio signal to obtain the phase adjusted audio signal. The phase adjustment unit (120) is configured to receive control information depending on a vertical phase coherence of the encoded audio signal. Moreover the phase adjustment unit (120) is adapted to adjust the decoded audio signal based on the control information.

No. of Pages : 41 No. of Claims : 19

(12) PATENT APPLICATION PUBLICATION
(21) Application No.1767/KOLNP/2014 A
(19) INDIA
(22) Date of filing of Application :22/08/2014
(43) Publication Date : 23/10/2015

(54) Title of the invention : METHOD AND APPARATUS FOR OBJECT SIZE ADJUSTMENT ON A SCREEN

(51) International classification :G06F3/048,G06F3/14
(31) Priority Document No :1020120019310
(32) Priority Date :24/02/2012
(33) Name of priority country :Republic of Korea
(86) International Application No :PCT/KR2013/001468
Filing Date :25/02/2013
(87) International Publication No :WO 2013/125914
(61) Patent of Addition to Application Number :NA
Filing Date :NA
(62) Divisional to Application Number :NA
Filing Date :NA

(71)**Name of Applicant :**
1)SAMSUNG ELECTRONICS CO. LTD.
Address of Applicant :129 Samsung ro Yeongtong gu Suwon si Gyeonggi do 443 742 Republic of Korea
(72)**Name of Inventor :**
1)KANG Ji Young
2)KWAK Se Jin
3)PARK Mi Jung
4)OH Sae Gee
5)LEE Chi Hoon

(57) Abstract :
A method and apparatus for adjusting sizes of objects displayed on a screen. The method includes recognizing one or more objects appearing on a screen. Alternatively the method includes receiving a selection command for a region on the screen and recognizing the selected region as an object. The method further includes: displaying guides indicating the or each recognized object on the screen; receiving a selection command for at least one recognized object; receiving a size adjustment command; adjusting upon reception of the size adjustment command a size of the at least one selected object with respect to a first axis or a second axis perpendicular to the first axis of the guide associated with the at least one selected object; and displaying the size adjusted object.

No. of Pages : 27 No. of Claims : 14

(12) PATENT APPLICATION PUBLICATION
(21) Application No.1656/KOLNP/2014 A
(19) INDIA
(22) Date of filing of Application :08/08/2014
(43) Publication Date : 23/10/2015

(54) Title of the invention : DEMODULATION PILOT SIGNAL PROCESSING METHOD BASE STATION AND USER EQUIPMENT

(51) International classification :H04L25/02
(31) Priority Document No :201210022525.6
(32) Priority Date :01/02/2012
(33) Name of priority country :China
(86) International Application No :PCT/CN2013/071266
Filing Date :01/02/2013
(87) International Publication No :WO 2013/113286
(61) Patent of Addition to Application Number :NA
Filing Date :NA
(62) Divisional to Application Number :NA
Filing Date :NA

(71)**Name of Applicant :**
1)HUAWEI TECHNOLOGIES CO. LTD.
Address of Applicant :Huawei Administration Building Bantian Longgang Shenzhen Guangdong 518129 China
(72)**Name of Inventor :**
1)LIU Kunpeng
2)LIU Jianghua

(57) Abstract :
Provided are a demodulation pilot signal processing method a base station and user equipment. The processing method comprises: a base station generating a DMRS corresponding to an E PDCCH in accordance with information that can be learnt by UE before receiving the E PDCCH sent by the base station; the base station mapping the DMRS onto a time frequency resource of a transmission pilot frequency corresponding to a downlink control channel region and sending same to the UE. In the technical solution of the present invention the base station and the UE no longer use an SCID to generate a DMRS thereby solving the problem that the SCID cannot be obtained and the DMRS cannot be generated before the UE receives the E PDCCH and then the E PDCCH cannot be demodulated and solving the demodulation problem of the E PDCCH.

No. of Pages : 59 No. of Claims : 39

(12) PATENT APPLICATION PUBLICATION
(19) INDIA
(22) Date of filing of Application :08/08/2014
(21) Application No.1657/KOLNP/2014 A
(43) Publication Date : 23/10/2015

(54) Title of the invention : METHOD AND APPARATUS IN A WIRELESS COMMUNICATION SYSTEM

(51) International classification :H04L1/18,H04B7/06,H04L1/06
(31) Priority Document No :61/703940
(32) Priority Date :21/09/2012
(33) Name of priority country :U.S.A.
(86) International Application No :PCT/SE2013/050686
Filing Date :13/06/2013
(87) International Publication No :WO 2014/046592
(61) Patent of Addition to Application Number :NA
Filing Date :NA
(62) Divisional to Application Number :NA
Filing Date :NA

(71)**Name of Applicant :**
1)TELEFONAKTIEBOLAGET L M ERICSSON (PUBL)
Address of Applicant :S 164 83 Stockholm Sweden
(72)**Name of Inventor :**
1)LIDIAN Namir
2)LARSSON Erik
3)CAVERNI Alessandro
4)VON WRYCZA Peter
5)KONUSKAN Cagatay

(57) Abstract :
There is disclosed a method performed by a User Equipment UE for Hybrid Automatic Repeat Request HARQ retransmission of data in a multi antenna wireless communication system. The method comprises receiving Acknowledgement/Negative Acknowledgement ACK/NACK feedback information relating to data transmitted on two streams and performing upon rank reduction where only one stream is available for transmission retransmission of data on a cancelled stream over the remaining stream. There is furthermore disclosed a UE configured for performing the method. A transmission method together with an arrangement for a UE is also disclosed.

No. of Pages : 60 No. of Claims : 34

(12) PATENT APPLICATION PUBLICATION
(19) INDIA
(22) Date of filing of Application :22/08/2014
(21) Application No.1769/KOLNP/2014 A
(43) Publication Date : 23/10/2015

(54) Title of the invention : LEFT HANDED AND RIGHT HANDED CUTTING TOOL

(51) International classification :B23B29/04,B23B27/00,B23B27/04
(31) Priority Document No :13/443565
(32) Priority Date :10/04/2012
(33) Name of priority country :U.S.A.
(86) International Application No :PCT/IL2013/050258
Filing Date :19/03/2013
(87) International Publication No :WO 2013/153548
(61) Patent of Addition to Application Number :NA
Filing Date :NA
(62) Divisional to Application Number :NA
Filing Date :NA

(71)**Name of Applicant :**
1)ISCAR LTD.
Address of Applicant :P.O. Box 11 24959 Tefen Israel
(72)**Name of Inventor :**
1)HECHT Gil

(57) Abstract :
In a cutting tool (20) used for internal machining operations a cutting insert (22) with a single cutting portion (24) is removably secured to an insert holder (26). The cutting insert (22) has two opposing end surfaces (30a 30b) and an insert peripheral surface (32) extending therebetween having three spaced apart abutment surfaces (34 36 38). The insert holder (26) has a holder portion (26) with a holder peripheral surface (48) and an adjacent seating surface (50). At least one protuberance (54a 54b) having four spaced apart reaction surfaces (56a 56b 56c 56d) protrudes from the seating surface (50). The cutting insert (20) is securable to the holding portion (26) in left hand and right hand assembly positions with the three abutment surfaces (34 36 38) in clamping contact with three of the four reaction surfaces. In the left hand assembly position a first end surface (30a) is in clamping contact with the seating surface (50) and in the right hand assembly position a second end surface (30b) is in clamping contact with the seating surface (50).

No. of Pages : 19 No. of Claims : 26

(12) PATENT APPLICATION PUBLICATION
(19) INDIA
(22) Date of filing of Application :22/08/2014
(21) Application No.1770/KOLNP/2014 A
(43) Publication Date : 23/10/2015

(54) Title of the invention : LEVERAGING INHERENT REDUNDANCY IN A MULTIFUNCTION IED

(51) International classification :G08B21/00
(31) Priority Document No :13/430391
(32) Priority Date :26/03/2012
(33) Name of priority country :U.S.A.
(86) International Application No :PCT/US2012/068966
Filing Date :11/12/2012
(87) International Publication No :WO 2013/147941
(61) Patent of Addition to Application Number :NA
Filing Date :NA
(62) Divisional to Application Number :NA
Filing Date :NA

(71)**Name of Applicant :**
1)SCHWEITZER ENGINEERING LABORATORIES INC.
Address of Applicant :2350 Ne Hopkins Court Pullman WA 99163 U.S.A.
(72)**Name of Inventor :**
1)FINNEY Dale S.
2)KASZTENNY Bogdan Z.
3)FISCHER Normann

(57) Abstract :
Disclosed herein are systems and methods for leveraging the inherent redundancy of electrical measurement inputs available to microprocessor based intelligent electronic devices (lEDs). Specifically an IED may receive a plurality of electrical measurements associated with an electric power delivery system such as measurements associated with a generator. A first protection module may be configured to detect a first type of electrical disturbance using a first subset of the plurality of electrical measurements. A second protection module may be configured to detect a second type of electrical disturbance using a second subset of the plurality of electrical measurements. A first redundant protection module may be configured to verify the detection of the first type of electrical disturbance using at least a portion of the second subset of the plurality of electrical measurements.

No. of Pages : 44 No. of Claims : 36

(12) PATENT APPLICATION PUBLICATION
(19) INDIA
(22) Date of filing of Application :14/07/2014
(21) Application No.1480/KOLNP/2014 A
(43) Publication Date : 23/10/2015

(54) Title of the invention : CONNECTOR

(51) International classification :F01D5/02,F04D29/26,F16D1/08
(31) Priority Document No :1122236.1
(32) Priority Date :23/12/2011
(33) Name of priority country :U.K.
(86) International Application No :PCT/GB2012/053097
Filing Date :12/12/2012
(87) International Publication No:WO 2013/093424
(61) Patent of Addition to Application Number :NA
Filing Date :NA
(62) Divisional to Application Number :NA
Filing Date :NA

(71)**Name of Applicant :**
1)NAPIER TURBOCHARGERS LIMITED
Address of Applicant :PO Box 1 Ruston House Waterside South Lincoln Lincolnshire LN5 7FD U.K.
(72)**Name of Inventor :**
1)PINKNEY Ian
2)OKHUAHESOGIE Osarobo Famous
3)ROACH Paul Eifion
4)THOMAS Neil Ryan
5)BROWN Ian Patrick Clare
6)KAY Peter
7)WILSON Stephen
8)SMITH David Leslie
9)GEORGE Robert Neil
10)JACKLIN Paul Leslie
11)NGAO Geoff Kinpoy
12)MUSSON Kevin John
13)MOORE Matthew Elijah
14)CLARE Jamie
15)MURRAY Thomas Jarlath
16)POTTER Stuart Michael
17)MONAGHAN Christopher John
18)TAYLOR Alan Martin
19)HEYES Francis Joseph Geoffrey
20)KNIGHTON Trevor

(57) Abstract :
A connector for connecting an impeller (1) to a shaft (2) is provided. The connector is formed as a unitary body. The connector has a sleeve portion (14) which is frictionally connected on a radially outer surface of a shaft side hub extension (H) of the impeller. The connector further has a threaded portion (12) carrying a thread which screws onto a corresponding threaded portion (7) of the shaft such that the connector provides a rotationally fixed connection between the impeller and the shaft. The hub extension has a central recess and a part (3) of the connector is inserted into the recess. The frictional connection between the sleeve portion and the radially outer surface of the hub extension transmits in use substantially all of the torque be¬ tween the shaft and the impeller.

No. of Pages : 18 No. of Claims : 14

(12) PATENT APPLICATION PUBLICATION
(19) INDIA
(22) Date of filing of Application :12/08/2014
(21) Application No.1674/KOLNP/2014 A
(43) Publication Date : 23/10/2015

(54) Title of the invention : DESCALING SYSTEM

(51) International classification :B21B45/08
(31) Priority Document No :2012054632
(32) Priority Date :12/03/2012
(33) Name of priority country :Japan
(86) International Application No :PCT/JP2013/001456
Filing Date :07/03/2013
(87) International Publication No :WO 2013/136734
(61) Patent of Addition to Application Number :NA
Filing Date :NA
(62) Divisional to Application Number :NA
Filing Date :NA

(71)**Name of Applicant :**
1)JFE STEEL CORPORATION
Address of Applicant :2 3 Uchisaiwai cho 2 chome Chiyoda ku Tokyo 1000011 Japan
(72)**Name of Inventor :**
1)KARUBE Kenta
2)NISHIYAMA Takashi
3)TANIGAKI Akihiko

(57) Abstract :
Provided is a descaling system capable of removing scale more efficiently. The descaling devices (40 50 60) in the descaling system (1) have descaling nozzles (41 51 61) for spraying water on the surface of a steel plate (K) thereby removing scale formed on said surface. The descaling nozzles (41 51 61) are connected to pumps (70) that pressurize water from a water supply source (100) and spray water pressurized in the pumps (70) onto the surface of the steel plate (K). The entry side of the pumps (70) is provided with a de aerating device (90) that reduces the dissolved oxygen concentration in the water to be delivered to the pumps (70) below the dissolved oxygen concentration in the raw water from the water supply source (100).

No. of Pages : 29 No. of Claims : 5

(12) PATENT APPLICATION PUBLICATION
(19) INDIA
(22) Date of filing of Application :25/08/2014
(21) Application No.1782/KOLNP/2014 A
(43) Publication Date : 23/10/2015

(54) Title of the invention : OUTDOOR UNIT FOR REFRIGERATION DEVICE

(51) International classification :F24F1/16,F25B39/00,F28D1/053
(31) Priority Document No :2012028387
(32) Priority Date :13/02/2012
(33) Name of priority country :Japan
(86) International Application No :PCT/JP2013/052594
Filing Date :05/02/2013
(87) International Publication No :WO 2013/121933
(61) Patent of Addition to Application Number :NA
Filing Date :NA
(62) Divisional to Application Number :NA
Filing Date :NA

(71)**Name of Applicant :**
1)DAIKIN INDUSTRIES LTD.
Address of Applicant :Umeda Center Building 4 12 Nakazaki Nishi 2 Chome Kita ku Osaka shi Osaka 5308323 Japan
(72)**Name of Inventor :**
1)MASUI Tomohiro
2)KUROISHI Masashi
3)KAZUSA Takuya
4)HAMADATE Junichi

(57) Abstract :
An outdoor unit for a refrigeration device is configured so that the heat exchange efficiency of the heat exchanger is not reduced by the gaps between header collecting tubes and fins adjacent to the header collecting tubes. Seal members (51 52 53 54) are respectively applied to an air blower chamber side front plate (25) an air flow protection plate (60) a machine chamber side side plate (24) and a partition plate (28). The seal members (51 52 53 54) are pressed by the air blower chamber side front plate (25) the air flow protection plate (60) the machine chamber side side plate (24) and the partition plate (28) against header collecting tubes (34 35) and against heat transfer fins (32) the tubes (34 35) and fins (32) being located around gaps (IS1 IS2) facing the air blower chamber side front plate (25) the air flow protection plate (60) the machine chamber side side plate (24) and the partition plate (28). As a result the seal members (51 52 53 54) are deformed and close the gaps (IS1 IS2).

No. of Pages : 32 No. of Claims : 8

(12) PATENT APPLICATION PUBLICATION
(19) INDIA
(22) Date of filing of Application :25/08/2014
(21) Application No.1783/KOLNP/2014 A
(43) Publication Date : 23/10/2015

(54) Title of the invention : CUTTING TOOL ASSEMBLY WITH REMOVABLE TOOL HEAD

(51) International classification :B23B29/04
(31) Priority Document No :13/450711
(32) Priority Date :19/04/2012
(33) Name of priority country :U.S.A.
(86) International Application No :PCT/IL2013/050273
Filing Date :21/03/2013
(87) International Publication No :WO 2013/156993
(61) Patent of Addition to Application Number :NA
Filing Date :NA
(62) Divisional to Application Number :NA
Filing Date :NA

(71)**Name of Applicant :**
1)ISCAR LTD.
Address of Applicant :P.O. Box 11 24959 Tefen Israel
(72)**Name of Inventor :**
1)HECHT Gil

(57) Abstract :
A cutting tool assembly (100 200 300) has a tool holder (102 202 302) a tool head (104 204 304) and a tool head fastening member. The tool holder has a holder mating surface (114 314) and a holder clamping portion (112) spaced apart in the rearward direction from the holder mating surface (114 314). The tool head (104 204 304) is provided with a tool head mating surface (132 316) and a tool head clamping recess (124). In an assembled position of the cutting tool assembly (100 200 300) the tool head mating surface (132 316) forms a dovetail connection with the holder mating surface (114 314) and the tool head fastening member (106) clamps the tool head clamping recess (124) thereby externally clamping the tool head (104 204 304) to the tool holder (102 202 302).

No. of Pages : 26 No. of Claims : 33

(12) PATENT APPLICATION PUBLICATION
(21) Application No.1666/KOLNP/2014 A
(19) INDIA
(22) Date of filing of Application :11/08/2014
(43) Publication Date : 23/10/2015

(54) Title of the invention : AIR DEFLECTOR DRIVE MEANS AND INDOOR AIR CONDITIONING UNIT USING DRIVE MEANS

(51) International classification :F24F1/00,F24F13/10
(31) Priority Document No :201220070564.9
(32) Priority Date :29/02/2012
(33) Name of priority country :China
(86) International Application No :PCT/CN2013/071287
Filing Date :01/02/2013
(87) International Publication No :WO 2013/127290
(61) Patent of Addition to Application Number :NA
Filing Date :NA
(62) Divisional to Application Number :NA
Filing Date :NA

(71)**Name of Applicant :**
1)GREE ELECTRIC APPLIANCES INC. OF ZHUHAI
Address of Applicant :Qianshan Jinji West Road Zhuhai Guangdong 519070 China
(72)**Name of Inventor :**
1)ZHANG Hui
2)CHEN Shaolin
3)WANG Xianlin
4)MENG Zhi

(57) Abstract :
Disclosed is an air deflector drive means comprising a drive case and a connecting rod (3). One side of the drive case is provided with a protruding opening (11) the connecting rod (3) is slidably provided in the drive case and a tip (31) of the connecting rod (3) protrudes from the protruding opening (11). A limiting structure is provided in the drive case and the displacement of the connecting rod (3) is limited in the direction perpendicular to the direction of movement of the connecting rod by means of the limiting structure. Furthermore also disclosed is an indoor air conditioning unit using the drive means.

No. of Pages : 15 No. of Claims : 10

(12) PATENT APPLICATION PUBLICATION
(19) INDIA
(22) Date of filing of Application :11/08/2014
(21) Application No.1667/KOLNP/2014 A
(43) Publication Date : 23/10/2015

(54) Title of the invention : SYSTEM AND METHOD FOR MIXED CODEBOOK EXCITATION FOR SPEECH CODING

(51) International classification :G10L19/00
(31) Priority Document No :13/768814
(32) Priority Date :15/02/2013
(33) Name of priority country :U.S.A.
(86) International Application No :PCT/CN2013/080268
Filing Date :29/07/2013
(87) International Publication No :WO 2014/124577
(61) Patent of Addition to Application Number :NA
Filing Date :NA
(62) Divisional to Application Number :NA
Filing Date :NA

(71)**Name of Applicant :**
1)HUAWEI TECHNOLOGIES CO. LTD.
Address of Applicant :Huawei Administration Building Bantian Longgang Shenzhen Guangdong 518129 China
(72)**Name of Inventor :**
1)GAO Yang

(57) Abstract :
In accordance with an embodiment a method of encoding an audio/speech signal includes determining a mixed codebook vector based on an incoming audio/speech signal where the mixed codebook vector includes a sum of a first codebook entry from a first codebook and a second codebook entry from a second codebook. The method further includes generating an encoded audio signal based on the determined mixed codebook vector and transmitting a coded excitation index of the determined mixed codebook vector.

No. of Pages : 57 No. of Claims : 24

(12) PATENT APPLICATION PUBLICATION
(19) INDIA
(22) Date of filing of Application :11/08/2014
(21) Application No.1668/KOLNP/2014 A
(43) Publication Date : 23/10/2015

(54) Title of the invention : DATA PROCESSING METHOD COMPUTATIONAL NODE AND SYSTEM

(51) International classification :G06F17/30
(31) Priority Document No :201210460097.5
(32) Priority Date :15/11/2012
(33) Name of priority country :China
(86) International Application No :PCT/CN2013/074507
Filing Date :22/04/2013
(87) International Publication No :WO 2014/075425
(61) Patent of Addition to Application Number :NA
Filing Date :NA
(62) Divisional to Application Number :NA
Filing Date :NA

(71)**Name of Applicant :**
1)HUAWEI TECHNOLOGIES CO. LTD.
Address of Applicant :Huawei Administration Building Bantian Longgang District Shenzhen Guangdong 518129 China
(72)**Name of Inventor :**
1)ZHANG Tianhu

(57) Abstract :
The embodiments of the present invention provide a data processing method a computational node and a system. The method comprises: a BPE registering an algorithm to a CEP instance; when the CEP instance detects an event concerned by an algorithm meets a condition of computation triggered by the algorithm the CEP instance transferring the event required by the computation to the BPE; the BPE obtaining a computation result; if the BPE determines that the computation result needs to be further computed the CPE writing the computation result in the CEP instance as an intermediate event; and when the CEP instance detects that an event concerned by another algorithm meets the condition of the computation triggered by another algorithm and the intermediate event is the event required for computation the CEP instance transferring the intermediate event to the BPE registered with another algorithm. The multi event and multi algorithm association is implemented by the CEP instance thereby simplifying the computational procedure and improving the timeliness.

No. of Pages : 60 No. of Claims : 20

(12) PATENT APPLICATION PUBLICATION
(19) INDIA
(22) Date of filing of Application :22/08/2014
(21) Application No.1781/KOLNP/2014 A
(43) Publication Date : 23/10/2015

(54) Title of the invention : CS/PS COORDINATION FOR CSFB/SRVCC

(51) International classification :H04W36/00
(31) Priority Document No :61/592621
(32) Priority Date :31/01/2012
(33) Name of priority country :U.S.A.
(86) International Application No :PCT/EP2012/070752
Filing Date :19/10/2012
(87) International Publication No :WO 2013/113414
(61) Patent of Addition to Application Number :NA
Filing Date :NA
(62) Divisional to Application Number :NA
Filing Date :NA

(71)**Name of Applicant :**
1)TELEFONAKTIEBOLAGET L M ERICSSON (PUBL)
Address of Applicant :S 164 83 Stockholm Sweden
(72)**Name of Inventor :**
1)RAMLE Peter
2)RYDNELL Gunnar

(57) Abstract :
The embodiments herein relate to a method in an SGSN (313) in a communications network (300). A user equipment (301) has moved from a source PS domain to a CS domain due to SRVCC or due to CSFB. The SGSN (313) determines that the SGSN (313) comprises information about a CS/PS coordination indicator and a CS operator indicator. The SGSN (313) evaluates whether a target PS operator is the same as a CS operator when the SGSN (313) is determined to comprises the CS/PS coordination indicator and the CS operator indicator. The SGSN (313) determines that the user equipment (301) shall remain connected to the SGSN (313) in the target PS domain when the CS operator is the same as the target PS operator. The SGSN (313) sends a reject command to the controller node (315) when the CS operator is different from the target PS operator.

No. of Pages : 40 No. of Claims : 28

(12) PATENT APPLICATION PUBLICATION
(19) INDIA
(22) Date of filing of Application :19/08/2014
(21) Application No.1740/KOLNP/2014 A
(43) Publication Date : 23/10/2015

(54) Title of the invention : OPTICAL PHYSICAL INTERFACE MODULE

(51) International classification :H04B10/40,H04B10/80,F21V8/00
(31) Priority Document No :13/360236
(32) Priority Date :27/01/2012
(33) Name of priority country :U.S.A.
(86) International Application No :PCT/IB2013/050586
Filing Date :23/01/2013
(87) International Publication No :WO 2013/111071
(61) Patent of Addition to Application Number :NA
Filing Date :NA
(62) Divisional to Application Number :NA
Filing Date :NA

(71)**Name of Applicant :**
1)TELEFONAKTIEBOLAGET LM ERICSSON (PUBL)
Address of Applicant :S 164 83 Stockholm Sweden
(72)**Name of Inventor :**
1)JULIEN Martin
2)BRUNNER Robert

(57) Abstract :
An optical physical interface module is provided which includes a first optical physical interface a second optical physical interface and one or more optical components. The first optical physical interface is configured to plug into a first connector and communicate optical signals toward the first connector. The second optical physical interface is configured to receive a second connector and communicate optical signals toward the second connector. The one or more optical components are operable to process optical signals between the first and second optical physical interfaces. The optical physical interface module may be provided at the edge of a circuit board so that the circuit board has an optical interface for external communication. The optical physical interface module may be a stand alone module or integrated into a connector of an optical cable among other configurations.

No. of Pages : 22 No. of Claims : 20

(12) PATENT APPLICATION PUBLICATION
(19) INDIA
(22) Date of filing of Application :20/08/2014
(21) Application No.1741/KOLNP/2014 A
(43) Publication Date : 23/10/2015

(54) Title of the invention : DISPENSING CLOSURE

(51) International classification :B65D47/08
(31) Priority Document No :NA
(32) Priority Date :NA
(33) Name of priority country :NA
(86) International Application No :PCT/EP2012/002269
Filing Date :29/05/2012
(87) International Publication No :WO 2013/178234
(61) Patent of Addition to Application Number :NA
Filing Date :NA
(62) Divisional to Application Number :NA
Filing Date :NA

(71)**Name of Applicant :**
1)APTAR FREYUNG GMBH
Address of Applicant :Löfflerstrasse 1 94078 Freyung Germany
(72)**Name of Inventor :**
1)WOHLGENANNT Herbert
2)KÖNIGSEDER Bruno
3)PRINZ Katrin

(57) Abstract :
The present invention relates to a dispensing closure (10) comprising a base (200) and a cover (100) being attached to said base by a hinge (400) and being movable between an opened and a closed position said cover comprising an outer side wall wherein said dispensing closure (10) also comprises tamper evident elements indicating whether said cover had been opened or not. The tamper evident elements comprise a first latch element (160) and a second latch element (2609 engaging with each other when said cover (100) is in its closed position. The cover comprises a push button region being arranged such that when being pushed by a user at least partly in a radial inward direction the first latch element (160) will be brought out of engagement with said second latch element (260).

No. of Pages : 22 No. of Claims : 15

(12) PATENT APPLICATION PUBLICATION
(21) Application No.1742/KOLNP/2014 A
(19) INDIA
(22) Date of filing of Application :20/08/2014
(43) Publication Date : 23/10/2015

(54) Title of the invention : ROLLER LEVELER AND METHOD FOR CORRECTING SHEET MATERIAL

(51) International classification :B21D1/05
(31) Priority Document No :2012028973
(32) Priority Date :13/02/2012
(33) Name of priority country :Japan
(86) International Application No :PCT/JP2013/052262
Filing Date :31/01/2013
(87) International Publication No :WO 2013/121891
(61) Patent of Addition to Application Number :NA
Filing Date :NA
(62) Divisional to Application Number :NA
Filing Date :NA

(71)**Name of Applicant :**
1)JP STEEL PLANTECH CO.
Address of Applicant :3 1 Kinko cho Kanagawa ku Yokohama shi Kanagawa 2210056 Japan
(72)**Name of Inventor :**
1)ABE Keizo

(57) Abstract :
This roller leveler (100) for correcting a sheet material (S) is equipped with: a leveling roll unit (20) having a plurality of leveling rolls (6,8) that rotate so as to thread the sheet material through while also taking in and pressing on the sheet material (S); pressure cylinders (4a,4b) for pressing on the sheet material (S) via the leveling rolls (6,8) at an entry side and exit side of the leveling roll unit (20); and a driving mechanism (15) for rotating the leveling rolls (6,8) to thread the sheet material (S) through. The diameter (D) of the plurality of leveling rolls (6,8) is given a value satisfying $0.5 < D/P < 0.9$ in relation to a between roll pitch (P) of the leveling rolls (6,8) determined by the maximum required yield stress and maximum required sheet thickness for a sheet material that must be corrected.

No. of Pages : 52 No. of Claims : 16

(12) PATENT APPLICATION PUBLICATION
(21) Application No.737/KOL/2014 A
(19) INDIA
(22) Date of filing of Application :07/07/2014
(43) Publication Date : 23/10/2015

(54) Title of the invention : VEHICLE BACK DOOR STRUCTURE.

(51) International classification	:B60J5/10
(31) Priority Document No	:2013-147946
(32) Priority Date	:16/07/2013
(33) Name of priority country	:Japan
(86) International Application No	:NA
Filing Date	:NA
(87) International Publication No	: NA
(61) Patent of Addition to Application Number	:NA
Filing Date	:NA
(62) Divisional to Application Number	:NA
Filing Date	:NA

(71)**Name of Applicant :**
1)SUZUKI MOTOR CORPORATION
Address of Applicant :300,TAKATSUKA-CHO, MINAMI-KU,HAMAMATSU, SHIZUOKA, 432-8611, JAPAN.
(72)**Name of Inventor :**
1)UMEDA YOSHIYUKI

(57) Abstract :
A vehicle back door structure according to which a balancer does not protrude into a vehicle room despite having interior placement, and dead space in the vehicle interior can be reduced is provided. A representative configuration of a vehicle back door structure according to the present invention is a vehicle back door structure in which the upper end of a back door is rotatably attached to the vehicle body, the back door includes an inner panel made of resin, a balancer 130 is arranged on the vehicle interior side, the balancer is arranged in the vehicle up-down direction when the back door is closed, one end of the balancer, which is the upper end side when the back door is closed, is coupled to the vehicle body, and another end of the balancer, which is the lower end side when the back door is closed, is coupled to the inner panel, wherein a recessed portion 124 that accommodates the balancer when the back door is closed is provided on the inner panel, and a coupling member (ball stud 126) that is coupled to the other end of the balancer is arranged in the recessed portion.

No. of Pages : 25 No. of Claims : 6

(12) PATENT APPLICATION PUBLICATION
(21) Application No.2655/KOLNP/2009 A
(19) INDIA
(22) Date of filing of Application :21/07/2009
(43) Publication Date : 23/10/2015

(54) Title of the invention : AN ISOLATED NUCLEIC ACID ENCODING AN ANTI-INTERFERON ALPHA MONOCLONAL ANTIBODY

(51) International classification :A61K39/00
(31) Priority Document No :60/528,757
(32) Priority Date :10/12/2003
(33) Name of priority country :U.S.A.
(86) International Application No :PCT/2004/041777
Filing Date :10/12/2004
(87) International Publication No : NA
(61) Patent of Addition to Application Number :NA
Filing Date :NA
(62) Divisional to Application Number :1300/KOLNP/2006
Filed on :17/05/2006

(71)**Name of Applicant :**
1)MEDAREX, INC.
Address of Applicant :707 STATE ROAD, PRINCETON, NJ 08540 U.S.A.
(72)**Name of Inventor :**
1)WITTE, ALISON
2)WILLIAMS, DENISE
3)CARDARELLI, JOSEPHINE, M
4)KING, DAVID
5)PASSMORE DAVID

(57) Abstract :
The instant invention discloses an isolated nucleic acid encoding an anti-interferon alpha monoclonal antibody, or antigen binding portion thereof, wherein the anti-interferon alpha monoclonal antibody, or antigen binding portion thereof, comprises: (a) a heavy chain variable region CDR1 comprising SEQ ED NO: 1; (b) a heavy chain variable region CDR2 comprising SEQ ED NO: 4; (c) a heavy chain variable region CDR3 comprising SEQ ID NO: 7; (d) a light chain variable region CDR1 comprising SEQ ID NO: 10; (e) a light chain variable region CDR2 comprising SEQ ED NO: 13; and (f) a light chain variable region CDR3 comprising SEQ ID NO: 16.

No. of Pages : 96 No. of Claims : 15

(12) PATENT APPLICATION PUBLICATION
(19) INDIA
(22) Date of filing of Application :01/08/2014
(21) Application No.1621/KOLNP/2014 A
(43) Publication Date : 23/10/2015

(54) Title of the invention : METHOD AND DEVICE FOR PRODUCING A SOLAR MODULE AND A SOLAR MODULE HAVING FLEXIBLE THIN FILM SOLAR CELLS

(51) International classification	:H01L31/0392,B32B37/20,H01L31/048
(31) Priority Document No	:10 2012 003 455.5
(32) Priority Date	:22/02/2012
(33) Name of priority country	:Germany
(86) International Application No	:PCT/EP2013/053599
Filing Date	:22/02/2013
(87) International Publication No	:WO 2013/124438
(61) Patent of Addition to Application Number	:NA
Filing Date	:NA
(62) Divisional to Application Number	:NA
Filing Date	:NA

(71)**Name of Applicant :**
1)MUEHLBAUER AG
Address of Applicant :Josef Muehlbauer Platz 1 93426 Roding Germany
(72)**Name of Inventor :**
1)SCHLEMPER Klaus
2)BERGMANN Dieter
3)BROD Volker

(57) Abstract :
A thin film solar module can have the following features: a first film web; a sequence of electrically conductive contact points arranged at a distance from one another on the first film web with respective first and second regions; a sequence of flexible thin film solar cells which has a first side that is designed as a first pole at least in certain regions and a second side that is designed as a second pole at least in certain regions a photovoltaically active layer structure a flexible sealing layer located on the first side of the layer structure and at least one electrical conductor located between the layer structure and the sealing layer and contacting the first pole wherein the flexible sealing layer and the electric conductor protrude laterally past the photovoltaically active layer structure; wherein the thin film solar cells are arranged on the first film web such that the second pole contacts a first contact point of the contact points on the first film web in the first region and the electric conductor contacting the first pole contacts a second contact point adjacent to the first contact point on the first film web in the second region.

No. of Pages : 42 No. of Claims : 31

(12) PATENT APPLICATION PUBLICATION
(19) INDIA
(22) Date of filing of Application :19/08/2014
(21) Application No.1730/KOLNP/2014 A
(43) Publication Date : 23/10/2015

(54) Title of the invention : MERCAPTOSILANE CARBON BLACK BLEND

(51) International classification :C08K3/04,C08K13/00
(31) Priority Document No :10 2012 205 642.4
(32) Priority Date :05/04/2012
(33) Name of priority country :Germany
(86) International Application No :PCT/EP2013/054847
Filing Date :11/03/2013
(87) International Publication No :WO 2013/149790
(61) Patent of Addition to Application Number :NA
Filing Date :NA
(62) Divisional to Application Number :NA
Filing Date :NA

(71)**Name of Applicant :**
1)EVONIK INDUSTRIES AG
Address of Applicant :Rellinghauser Straße 1 11 45128 Essen Germany
(72)**Name of Inventor :**
1)BLUME Anke
2)KLOCKMANN Oliver

(57) Abstract :
The invention relates to mercaptosilane carbon black blends containing at least 20% by weight of mercaptosilane of general formula (I) and carbon black wherein the mercaptosilane carbon black blend has an iron content of < 9 ppm. The blends are produced by mixing the mercaptosilane of general formula (I) with the carbon black. The blends can be used in rubber mixtures.

No. of Pages : 47 No. of Claims : 9

(12) PATENT APPLICATION PUBLICATION
(19) INDIA
(22) Date of filing of Application :19/08/2014
(21) Application No.1731/KOLNP/2014 A
(43) Publication Date : 23/10/2015

(54) Title of the invention : PROCESS FOR REMOVING SALTS FROM A PROCESSING LIQUID

(51) International classification :B01D3/10
(31) Priority Document No :61/600854
(32) Priority Date :20/02/2012
(33) Name of priority country :U.S.A.
(86) International Application No :PCT/US2013/026729
Filing Date :19/02/2013
(87) International Publication No :WO 2013/126346
(61) Patent of Addition to Application Number :NA
Filing Date :NA
(62) Divisional to Application Number :NA
Filing Date :NA

(71)**Name of Applicant :**
1)CCR TECHNOLOGIES LTD.
Address of Applicant :5 Richard Way SW Suite 300 Calgary Alberta T3E 7M8 Canada
(72)**Name of Inventor :**
1)CARLSON Stephen W.
2)ABRY Raymond G.F.

(57) Abstract :
A process for removing acid decomposable contaminants from a processing liquid wherein an acid is admixed with a processing liquid and the mixture of acid and processing liquid are introduced into a degassing vessel such that the gas formed by the reaction of the acids and the decomposable gases is released and a processing liquid freed of acid decomposable contaminants is removed from the degassing vessel.

No. of Pages : 15 No. of Claims : 9

(12) PATENT APPLICATION PUBLICATION
(19) INDIA
(22) Date of filing of Application :11/07/2014
(21) Application No.1462/KOLNP/2014 A
(43) Publication Date : 23/10/2015

(54) Title of the invention : APPARATUS AND METHOD FOR STRIPPING SOLDER METALS DURING THE RECYCLING OF WASTE ELECTRICAL AND ELECTRONIC EQUIPMENT

(51) International classification :B09B3/00,B09B5/00
(31) Priority Document No :61/576,035
(32) Priority Date :15/12/2011
(33) Name of priority country :U.S.A.
(86) International Application No :PCT/US2012/069404
Filing Date :13/12/2012
(87) International Publication No :WO 2013/090517
(61) Patent of Addition to Application Number :NA
Filing Date :NA
(62) Divisional to Application Number :NA
Filing Date :NA

(71)**Name of Applicant :**
1)ADVANCED TECHNOLOGY MATERIALS,INC.
Address of Applicant :7 COMMERCE DRIVE, DANBURY, CONNECTICUT 06810 UNITED STATES OF AMERICA U.S.A.
(72)**Name of Inventor :**
1)CHEN, TIANNIU
2)KORZENSKI, MICHAEL B.
3)JIANG, PING

(57) Abstract :
Apparatuses and processes for recycling printed wire boards, wherein electronic components, precious metals and base metals may be collected for reuse and recycling. The apparatuses generally include a mechanical solder removal module and/or a thermal module, a chemical solder removal module, and a precious metal leaching module, wherein the modules are attached for continuous passage of the e-waste from module to module.

No. of Pages : 62 No. of Claims : 33

(12) PATENT APPLICATION PUBLICATION
(19) INDIA
(22) Date of filing of Application :07/08/2014
(21) Application No.1650/KOLNP/2014 A
(43) Publication Date : 23/10/2015

(54) Title of the invention : METHOD AND APPARATUS FOR PILOT POWER ALLOCATION IN A MULTI ANTENNA COMMUNICATION SYSTEM

(51) International classification :H04W52/34,H04W72/12
(31) Priority Document No :61/592319
(32) Priority Date :30/01/2012
(33) Name of priority country :U.S.A.
(86) International Application No :PCT/SE2013/050047
Filing Date :22/01/2013
(87) International Publication No :WO 2013/115706
(61) Patent of Addition to Application Number :NA
Filing Date :NA
(62) Divisional to Application Number :NA
Filing Date :NA

(71)**Name of Applicant :**
1)OPTIS CELLULAR TECHNOLOGY LLC
Address of Applicant :P.O. Box 250649 Plano TX 75025 U.S.A.
(72)**Name of Inventor :**
1)GÖRANSSON Bo
2)LARSSON Erik
3)MIAO Qingyu
4)NAMMI Sairamesh

(57) Abstract :
The embodiments herein relate to a method in abase station (301) for determining adjustment of common pilot power in a four way transmit antenna 4Tx communications system (300). The base station (301) comprises a first transmit antenna (1201) a second transmit antenna (1202) a third transmit antenna (1203) and a fourth transmit antenna (1204). The base station (301) identifies a set of scheduled user equipments (310) in the communications system (300). The base station (301) determines that the common pilot power should be adjusted based on a criterion associated with the set of scheduled user equipments (310).

No. of Pages : 56 No. of Claims : 38

(12) PATENT APPLICATION PUBLICATION
(21) Application No.1673/KOLNP/2014 A
(19) INDIA
(22) Date of filing of Application :12/08/2014
(43) Publication Date : 23/10/2015

(54) Title of the invention : HIGH STRENGTH COLD ROLLED STEEL SHEET AND PROCESS FOR MANUFACTURING SAME

(51) International classification :C22C38/00,C21D9/46,C22C38/14
(31) Priority Document No :2012050591
(32) Priority Date :07/03/2012
(33) Name of priority country :Japan
(86) International Application No :PCT/JP2013/001217
Filing Date :28/02/2013
(87) International Publication No :WO 2013/132796
(61) Patent of Addition to Application Number :NA
Filing Date :NA
(62) Divisional to Application Number :NA
Filing Date :NA

(71)**Name of Applicant :**
1)JFE STEEL CORPORATION
Address of Applicant :2 3 Uchisaiwai cho 2 chome Chiyoda ku Tokyo 1000011 Japan
(72)**Name of Inventor :**
1)KAWABE Hidetaka
2)YOKOTA Takeshi
3)SUGIHARA Reiko
4)AIZAWA Shigeyuki
5)NAKAZATO Kazuki

(57) Abstract :
The present invention addresses the problem of providing a high strength cold rolled steel sheet which has a tensile strength (TS) of 1180MPa or more and exhibits improved elongation stretch flangeability and bendability by adjusting the metal structure of a cold rolled steel sheet which does not contain any expensive alloying element. In order to solve the problem this high strength cold rolled steel sheet has a specific composition and a structure which comprises in volume fraction 40 to 60% of ferrite 10 to 30% of bainite 20 to 40% of tempered martensite and 5 to 20% of retained austenite and in which tempered martensite phases having major axis lengths of 5μm or less account for 80 to 100% of the total volume fraction of the tempered martensite.

No. of Pages : 28 No. of Claims : 2

(12) PATENT APPLICATION PUBLICATION
(19) INDIA
(22) Date of filing of Application :25/07/2014
(21) Application No.1580/KOLNP/2014 A
(43) Publication Date : 23/10/2015

(54) Title of the invention : ADAPTIVE ACCESS CHANNEL OVERLOAD CONTROL

(51) International classification :H04W48/06
(31) Priority Document No :13/343526
(32) Priority Date :04/01/2012
(33) Name of priority country :U.S.A.
(86) International Application No :PCT/IB2012/055888
Filing Date :25/10/2012
(87) International Publication No :WO 2013/102801
(61) Patent of Addition to Application Number :NA
Filing Date :NA
(62) Divisional to Application Number :NA
Filing Date :NA

(71)**Name of Applicant :**
1)TELEFONAKTIEBOLAGET L M ERICSSON (PUBL)
Address of Applicant :S 164 83 Stockholm Sweden
(72)**Name of Inventor :**
1)YE Erning
2)TAPADAR Indranil Bob

(57) Abstract :
A device for use in a communication network having an access channel is provided. The device includes a memory that stores access class (AC) barring parameters. The AC barring parameters establish rules to determine whether to transmit an access message on the access channel. The device includes a processor that determines whether the access channel is in an overload condition and determines of overload levels in response to the access channel being in an overload condition. A value of at least one AC barring parameter is defined based on the determined one of the plurality of overload levels. The device includes a transmitter that transmits an update message. The update message includes the defined value of the AC barring parameter corresponding to the determined one of the plurality of overload levels.

No. of Pages : 42 No. of Claims : 29

(12) PATENT APPLICATION PUBLICATION
(21) Application No.1689/KOLNP/2014 A
(19) INDIA
(22) Date of filing of Application :13/08/2014
(43) Publication Date : 23/10/2015

(54) Title of the invention : METHODS FOR MAKING POLYMER PARTICULATES IN GEL FORM

(51) International classification :C08J3/12,C08F2/00,C08F2/22
(31) Priority Document No :61/597,118
(32) Priority Date :09/02/2012
(33) Name of priority country :U.S.A.
(86) International Application No :PCT/US2013/025448
Filing Date :08/02/2013
(87) International Publication No :WO 2013/120028
(61) Patent of Addition to Application Number :NA
Filing Date :NA
(62) Divisional to Application Number :NA
Filing Date :NA

(71)**Name of Applicant :**
1)GEORGIA PACIFIC CHEMICALS LLC
Address of Applicant :133 Peachtree Street NE, Atlanta, Georgia 30303 UNITED STATES OF AMERICA
(72)**Name of Inventor :**
1)LUDVIK, Joseph
2)DONG, Xing

(57) Abstract :
Methods for making polymer particles in gel form via an emulsion and/or suspension process are provided. The method can include preparing a reactant mixture comprising a carrier fluid and a monomer component containing one or more phenolic compounds and optionally one or more crosslinking compounds, a mixture of Maillard reactants, or a combination thereof. The monomer component can polymerize to form the polymer particles in gel form. The reactant mixture can be located within a reactor having one or more inner surfaces in contact with the reactant mixture during polymerization of the monomer component. The one or more inner surfaces limit a release of metal, metal ions, or a combination thereof into the reactant mixture to produce the polymer particles in gel form containing less than 1 wt% metal atoms, metal ions, or a combination thereof, based on the total weight of the polymer particles in gel form.

No. of Pages : 85 No. of Claims : 20

(12) PATENT APPLICATION PUBLICATION
(19) INDIA
(22) Date of filing of Application :22/08/2014
(21) Application No.1771/KOLNP/2014 A
(43) Publication Date : 23/10/2015

(54) Title of the invention : APPARATUS FOR PROVIDING AN AUDIO SIGNAL FOR REPRODUCTION BY A SOUND TRANSDUCER SYSTEM METHOD AND COMPUTER PROGRAM

(51) International classification :H04R3/04,H03G5/16,H04S7/00
(31) Priority Document No :61/602767
(32) Priority Date :24/02/2012
(33) Name of priority country :U.S.A.
(86) International Application No :PCT/EP2013/053743
Filing Date :25/02/2013
(87) International Publication No :WO 2013/124490
(61) Patent of Addition to Application Number :NA
Filing Date :NA
(62) Divisional to Application Number :NA
Filing Date :NA

(71)**Name of Applicant :**
1)FRAUNHOFER GESELLSCHAFT ZUR FÖRDERUNG DER ANGEWANDTEN FORSCHUNG E.V.
Address of Applicant :Hansastraße 27c 80686 München Germany
(72)**Name of Inventor :**
1)LESCHKA Florian
2)FLEISCHMANN Felix
3)PLOGSTIES Jan
4)SILZLE Andreas

(57) Abstract :
An apparatus (100) for processing an input audio signal (122) for reproduction by a sound transducer (130) comprises an equalization parameter determinator (110) for determining a set of equalization parameters (112) and an equalizer (120) configured to equalize the input audio signal (122) to obtain an equalized audio signal (124). Different concepts for the determination of the set of equalization parameters (112) comprise an image recognition an evaluation of an identification signal which is provided by the sound transducer via an audio connection and a measurement of the impedance of the sound transducer over frequency. Also an upload functionality and a download functionality are provided.

No. of Pages : 65 No. of Claims : 16

(12) PATENT APPLICATION PUBLICATION
(19) INDIA
(22) Date of filing of Application :22/08/2014
(21) Application No.1772/KOLNP/2014 A
(43) Publication Date : 23/10/2015

(54) Title of the invention : HER3 INHIBITOR FOR MODULATING RADIOSENSITIVITY

(51) International classification :C07K16/32,A61K39/00,A61P35/00
(31) Priority Document No :61/602239
(32) Priority Date :23/02/2012
(33) Name of priority country :U.S.A.
(86) International Application No :PCT/EP2013/053562
Filing Date :22/02/2013
(87) International Publication No :WO 2013/124419
(61) Patent of Addition to Application Number :NA
Filing Date :NA
(62) Divisional to Application Number :NA
Filing Date :NA

(71)**Name of Applicant :**
1)U3 PHARMA GMBH
Address of Applicant :Fraunhoferstr.22 82152 Martinsried Germany
(72)**Name of Inventor :**
1)WHEELER Deric L
2)HETTMANN Thore

(57) Abstract :
The present invention relates to the use of an inhibitor of HER 3 for the treatment of a hyperproliferative disease in combination with radiation treatment.

No. of Pages : 226 No. of Claims : 20

(12) PATENT APPLICATION PUBLICATION
(21) Application No.1773/KOLNP/2014 A
(19) INDIA
(22) Date of filing of Application :22/08/2014
(43) Publication Date : 23/10/2015

(54) Title of the invention : ELECTRICAL STEEL SHEET WITH INSULATION COATING METHOD OF MANUFACTURING SAME AND COATING MATERIAL FOR FORMING INSULATING COATING

(51) International classification :C23C22/00,H01F1/18,C21D9/46
(31) Priority Document No :2012043512
(32) Priority Date :29/02/2012
(33) Name of priority country :Japan
(86) International Application No :PCT/JP2013/054674
Filing Date :25/02/2013
(87) International Publication No :WO 2013/129282
(61) Patent of Addition to Application Number :NA
Filing Date :NA
(62) Divisional to Application Number :NA
Filing Date :NA

(71)**Name of Applicant :**
1)JFE STEEL CORPORATION
Address of Applicant :2 3 Uchisaiwai cho 2 chome Chiyoda ku Tokyo 1000011 Japan
2)DAI NIPPON TORYO CO. LTD.
(72)**Name of Inventor :**
1)NAKAGAWA Nobuko
2)SHIGEKUNI Tomofumi
3)KUBOTA Takahiro
4)TANIDA Osamu

(57) Abstract :
A coating material for forming an insulation coating includes in addition to a solvent: an aqueous carboxy group containing resin as component (A) in an amount of 100 parts by mass in terms of solid content; an aluminium containing oxide as component (B) in an amount of more than 40 parts by mass but less than 150 parts by mass in terms of solid content based on the component (A) present in an amount of 100 parts by mass in terms of solid content; and at least one crosslinking agent as component (C) selected from the group consisting of melamine isocyanate and oxazoline in an amount of more than 20 parts by mass but less than 100 parts by mass in terms of solid content based on the component (A) present in an amount of 100 parts by mass in terms of solid content. An electrical steel sheet in which the coating material is used and which has a large interlaminar insulation resistance when laminated. A manufacturing method therefor.

No. of Pages : 77 No. of Claims : 8

(12) PATENT APPLICATION PUBLICATION
(21) Application No.1784/KOLNP/2014 A
(19) INDIA
(22) Date of filing of Application :25/08/2014
(43) Publication Date : 23/10/2015

(54) Title of the invention : INFORMATION FEEDBACK METHOD AND DEVICE AND TERMINAL

(51) International classification :H04L1/00,H04B7/06
(31) Priority Document No :201210039559.6
(32) Priority Date :21/02/2012
(33) Name of priority country :China
(86) International Application No :PCT/CN2013/071295
Filing Date :02/02/2013
(87) International Publication No :WO 2013/123850
(61) Patent of Addition to Application Number :NA
Filing Date :NA
(62) Divisional to Application Number :NA
Filing Date :NA

(71)**Name of Applicant :**
1)HUAWEI TECHNOLOGIES CO. LTD.
Address of Applicant :Huawei Administration Building Bantian Longgang Shenzhen Guangdong 518129 China
(72)**Name of Inventor :**
1)GONG Zhengwei

(57) Abstract :
An information feedback method comprises: measuring CQI about a link between each coordinated transmission node in a coordinated transmission node set and a terminal the coordinated transmission nodes being deployed around a current primary service transmission node of the terminal; using the CQI about the link between each coordinated transmission node and the terminal and a corresponding RI value as spectrum effectiveness calculation function parameters to obtain a spectrum effectiveness value corresponding to the link between each coordinated transmission node and the terminal; using a spectrum effectiveness value corresponding to the link between the current primary service transmission node and the terminal and the spectrum effectiveness value corresponding to the link between each coordinated transmission node and the terminal as selection criterion function parameters and selecting the coordinated transmission node as a preferred coordinated transmission node when the value of a selection criterion function is smaller than or equal to a preconfigured comparison threshold value; and sending information about the preferred coordinated transmission node to a transmitting end for making a selection. The uplink feedback overhead can be reduced and the transmitting end can quickly obtain an preferred coordinated transmission node.

No. of Pages : 33 No. of Claims : 21

(12) PATENT APPLICATION PUBLICATION
(19) INDIA
(22) Date of filing of Application :25/08/2014
(21) Application No.1785/KOLNP/2014 A
(43) Publication Date : 23/10/2015

(54) Title of the invention : PORTABLE DEVICE FOR ELECTRONIC PAYMENTS

(51) International classification	:G06Q20/06,G06Q20/22,G06Q20/32
(31) Priority Document No	:106125
(32) Priority Date	:31/01/2012
(33) Name of priority country	:Portugal
(86) International Application No	:PCT/PT2013/000005
Filing Date	:30/01/2013
(87) International Publication No	:WO 2013/115663
(61) Patent of Addition to Application Number	:NA
Filing Date	:NA
(62) Divisional to Application Number	:NA
Filing Date	:NA

(71)**Name of Applicant :**
1)FERNANDES DE SOUSA CRUZ Orlando
Address of Applicant :Avenida Heróis de Angola n°67 1°Esq. 2400 154 Leiria Portugal
(72)**Name of Inventor :**
1)FERNANDES DE SOUSA CRUZ Orlando

(57) Abstract :
The present invention called Portable device for electronic payments or Electronic wallet calculator for cashless transactions refers to a combined system of conversion calculation and transmission of processed data for immediate and presencial payments and revenues through portable or fixed devices of close but contactless communication which in most models is similar to a wallet calculator or a mobile phone in which the basic functions of arithmetic operations designed to be subtraction (debit) or addition (credit) are only performed whenever two similar or compatible devices establish a link of connectivity and synchronization of the processed encoded and encrypted data between themselves in a secure and off line way using infrared radio frequency of short distance or other forms of contactless transmission.

No. of Pages : 16 No. of Claims : 9

(12) PATENT APPLICATION PUBLICATION
(19) INDIA
(22) Date of filing of Application :13/08/2014
(21) Application No.1680/KOLNP/2014 A
(43) Publication Date : 23/10/2015

(54) Title of the invention : ARYLALKYLOXY PYRIMIDINE DERIVATIVE PESTICIDE FOR AGRICULTURAL AND HORTICULTURAL USE CONTAINING ARYLALKYLOXY PYRIMIDINE DERIVATIVE AS ACTIVE INGREDIENT AND USE OF SAME

(51) International classification :C07D239/34,A01N43/54,A01N43/653
(31) Priority Document No:2012019768
(32) Priority Date :01/02/2012
(33) Name of priority country :Japan
(86) International Application No :PCT/JP2013/052421
Filing Date :01/02/2013
(87) International Publication No :WO 2013/115391
(61) Patent of Addition to Application Number :NA
Filing Date :NA
(62) Divisional to Application Number :NA
Filing Date :NA

(71)**Name of Applicant :**
1)NIHON NOHYAKU CO. LTD.
Address of Applicant :19 8 Kyobashi 1 chome Chuo ku Tokyo 1048386 Japan
(72)**Name of Inventor :**
1)SATOH Eikou
2)MURATA Tetsuya
3)HARAYAMA Hiroto
4)NAKANO Motofumi
5)FUKATSU Kosuke
6)INUKAI Kayo
7)KASAHARA Ryota
8)ABE Yutaka
9)HAYASHI Nobuyuki
10)FUJITA Naoya

(57) Abstract :
An arylalkyloxy pyrimidine derivative represented by general formula (I) or a salt thereof; a pesticide for agricultural and horticultural use which contains the compound as an active ingredient; and a use of the pesticide for agricultural and horticultural use. (In the formula R represents an alkyl group a cycloalkyl group an alkenyl group an alkynyl group a haloalkyl group a haloalkenyl group a haloalkynyl group an alkoxyalkyl group a dioxolane group or the like; each of R and R represents a hydrogen atom an alkyl group or the like; X represents an alkyl group a cycloalkyl group an alkenyl group an alkynyl group a haloalkyl group a haloalkenyl group a haloalkynyl group a trialkylsilyl group or the like; Y represents CH or a nitrogen atom; q represents an integer of 1 3; m represents an integer of 0 5; and n represents 0 or 1.)

No. of Pages : 204 No. of Claims : 8

(12) PATENT APPLICATION PUBLICATION
(21) Application No.270/KOL/2014 A
(19) INDIA
(22) Date of filing of Application :06/03/2014
(43) Publication Date : 23/10/2015

(54) Title of the invention : A STATIC FLUID DRIVEN PISTON DEVICE

(51) International classification :F16J1/02
(31) Priority Document No :NA
(32) Priority Date :NA
(33) Name of priority country :NA
(86) International Application No :NA
Filing Date :NA
(87) International Publication No : NA
(61) Patent of Addition to Application Number :NA
Filing Date :NA
(62) Divisional to Application Number :NA
Filing Date :NA

(71)**Name of Applicant :**
1)BHATTACHARYA SUMANTA
Address of Applicant :34, CREEK ROW, 4TH FLOOR, KOLKATA-700014. INDIA West Bengal India
(72)**Name of Inventor :**
1)BHATTACHARYA SUMANTA

(57) Abstract :
This Invention comprises of multiple embodiments of a special type of piston device or apparatus the primary purpose of which is to ensure that the piston device is capable of delivering a net thrust or net force in the direction of the piston-head or piston-heads from the force exerted by compressed and/or pressurized fluids, particularly static (non-moving and/or non-flowing) fluid(s) . contained within the piston cylinder or housing.

No. of Pages : 29 No. of Claims : 5

(12) PATENT APPLICATION PUBLICATION
(19) INDIA
(22) Date of filing of Application :21/07/2014
(21) Application No.779/KOL/2014 A
(43) Publication Date : 23/10/2015

(54) Title of the invention : DOOR STRUCTURE FOR VEHICLE

(51) International classification :B60J5/10
(31) Priority Document No :2013-152868
(32) Priority Date :23/07/2013
(33) Name of priority country :Japan
(86) International Application No :NA
Filing Date :NA
(87) International Publication No : NA
(61) Patent of Addition to Application Number :NA
Filing Date :NA
(62) Divisional to Application Number :NA
Filing Date :NA

(71)**Name of Applicant :**
1)SUZUKI MOTOR CORPORATION
Address of Applicant :300 TAKATSUKA-CHO, MINAMI-KU, HAMAMATSU, SHIZUOKA, 432-8611, JAPAN
(72)**Name of Inventor :**
1)KIFUNE TARO
2)SASAGAWA TAKAFUMI
3)UCHIGATA MITSURU

(57) Abstract :
A vehicle door structure that can suppress deformation of a door sash made of resin is provided. A vehicle door structure (100) includes a vehicle door (102), a door sash (110) made of resin with an elongated shape that guides a door glass (114) that can be raised and lowered inside the vehicle door and accommodates the door glass when the door glass is lowered, and an elastic glass run (112) that is assembled to an inside of the door sash and is in contact with an edge of the door glass. The door sash includes an inner wall (116) and an outer wall (118) that are in contact with the glass run respectively from a vehicle inner side and a vehicle outer side, a coupling wall (120) that couples the inner wall and the outer wall and surrounds the glass run together with the inner wall and the outer wall, an outward-projecting wall (140) that projects outward from the inner wall, the outer wall and the coupling wall and surrounds the walls, and a fixed portion (142) that extends from the outward-projecting wall toward a vehicle inner side and is fixed to an inner door panel (146) constituting the vehicle door.

No. of Pages : 26 No. of Claims : 5

(12) PATENT APPLICATION PUBLICATION
(19) INDIA
(22) Date of filing of Application :25/07/2014
(21) Application No.1570/KOLNP/2014 A
(43) Publication Date : 23/10/2015

(54) Title of the invention : SWAGE INDICATING COLLAR

(51) International classification :F16B19/05
(31) Priority Document No :13/832,974
(32) Priority Date :15/03/2013
(33) Name of priority country :U.S.A.
(86) International Application No :PCT/US2014/020250
Filing Date :04/03/2014
(87) International Publication No : NA
(61) Patent of Addition to Application Number :NA
Filing Date :NA
(62) Divisional to Application Number :NA
Filing Date :NA

(71)**Name of Applicant :**
1)ALCOA INC.
Address of Applicant :201 ISABELLA STREET PITTSBURGH, PENNSYLVANIA 15212-5858 UNITED STATES OF AMERICA.
2)CORBETT, ROBERT J.
(72)**Name of Inventor :**
1)CORBETT, ROBERT J.

(57) Abstract :
A swage collar (114) including a shank (130) having a first end (132), a second end (134) opposite the first end (132), and an outside diameter, a flange (136) extending circumferentialiy from the first end (132) of the shank (130) and having a outer diameter, and a scalloped shoulder (140) formed at a location where the first end (132) of the shank (130) transitions to the flange (136). When the swage collar (114) is swaged, the shouider (140) is deformed from an undeformed state to a deformed state such that the shoulder (140) is blended with the outside diameter of the shank (130) and the outer diameter of the flange (136). When the shoulder (130) is in its deformed state, it includes multiple curved portions each having a radius of curvature that visually indicates all around the outside diameter of the collar (114) a complete swage of the collar (114). Knurling (231) located on the outside diameter of the shank (230) and proximate to the second end (234) is deformabie and provides a visual indication of the application of an installation tool.

No. of Pages : 21 No. of Claims : 15

(12) PATENT APPLICATION PUBLICATION
(21) Application No.1669/KOLNP/2014 A
(19) INDIA
(22) Date of filing of Application :11/08/2014
(43) Publication Date : 23/10/2015

(54) Title of the invention : DETERMINATION OF AN IMPAIRMENT COMPENSATION MATRIX FOR AN ANTENNA ARRAY

(51) International classification :H04B17/00
(31) Priority Document No :61/597903
(32) Priority Date :13/02/2012
(33) Name of priority country :U.S.A.
(86) International Application No :PCT/IB2013/051146
Filing Date :12/02/2013
(87) International Publication No :WO 2013/124762
(61) Patent of Addition to Application Number :NA
Filing Date :NA
(62) Divisional to Application Number :NA
Filing Date :NA

(71)**Name of Applicant :**
1)OPTIS CELLULAR TECHNOLOGY LLC
Address of Applicant :P.O. Box 250649 Plano Texas 75025 U.S.A.
(72)**Name of Inventor :**
1)MCGOWAN Neil
2)DA SILVEIRA Marthinus W.
3)GORANSSON Bo
4)DEANE Peter

(57) Abstract :
Determination of an impairment compensation matrix for compensation of impairments in an antenna array is disclosed. A plurality of different combinations of multi signal transmissions which form at least one null at a respective location of a plurality of locations is determined. Each combination includes a multi signal transmission that comprises at least two concurrent signal transmissions from at least two antenna subarrays of N antenna subarrays and the respective location. Based on signal characteristics associated with the plurality of different combinations of multi signal transmissions and an expected signal reception at the plurality of locations an impairment matrix that identifies an effect of impairments among the N antenna subarrays is determined. The impairment compensation matrix is determined based on the impairment matrix.

No. of Pages : 46 No. of Claims : 21

(12) PATENT APPLICATION PUBLICATION
(21) Application No.1776/KOLNP/2014 A
(19) INDIA
(22) Date of filing of Application :22/08/2014
(43) Publication Date : 23/10/2015

(54) Title of the invention : METHOD AND APPARATUS FOR PROCESSING INFORMATION OF IMAGE INCLUDING A FACE

(51) International classification :H04N5/262,G06K9/20
(31) Priority Document No :1020120018636
(32) Priority Date :23/02/2012
(33) Name of priority country :Republic of Korea
(86) International Application No :PCT/KR2013/001469
Filing Date :25/02/2013
(87) International Publication No :WO 2013/125915
(61) Patent of Addition to Application Number :NA
Filing Date :NA
(62) Divisional to Application Number :NA
Filing Date :NA

(71)**Name of Applicant :**
1)SAMSUNG ELECTRONICS CO. LTD.
Address of Applicant :129 Samsung ro Yeongtong gu Suwon si Gyeonggi do 443 742 Republic of Korea
(72)**Name of Inventor :**
1)PARK Mi Jung
2)KANG Ji Young
3)LEE Chi Hoon
4)OH Sae Gee

(57) Abstract :
An image processing method and apparatus are provided. The method includes obtaining a first image including a face obtaining information indicating whether a pre set condition is satisfied obtaining location information for a face part within the first image when the pre set condition is satisfied and generating a synthesised image by adding a second image corresponding to the satisfied condition to the first image at the location of the face part.

No. of Pages : 23 No. of Claims : 18

(12) PATENT APPLICATION PUBLICATION
(19) INDIA
(22) Date of filing of Application :22/08/2014
(21) Application No.1777/KOLNP/2014 A
(43) Publication Date : 23/10/2015

(54) Title of the invention : STROMAL STEM CELLS

(51) International classification :C12N5/071,A61K35/28
(31) Priority Document No :1202319.8
(32) Priority Date :10/02/2012
(33) Name of priority country :U.K.
(86) International Application No :PCT/EP2013/052692
Filing Date :11/02/2013
(87) International Publication No :WO 2013/117761
(61) Patent of Addition to Application Number :NA
Filing Date :NA
(62) Divisional to Application Number :NA
Filing Date :NA

(71)**Name of Applicant :**
1)ORBSEN THERAPEUTICS LIMITED
Address of Applicant :Orbsen Building, University Road, Galway Ireland
(72)**Name of Inventor :**
1)ELLIMAN, Stephen Joseph

(57) Abstract :
Stromal stem cells are prospectively isolated from human bone marrow then expanded into clonal populations and cultured and used, the isolation being on the basis of expression of a cell surface marker, wherein the cell surface marker binds an antibody and wherein said antibody cross reacts with a cell surface marker found on mouse stromal stem cells or rat stromal stem cells, and optionally also on a cell of at least one other mammalian species selected from mouse, rat, horse, rabbit and pig cells. Useful stromal stem cell populations are positive for SDC2.

No. of Pages : 55 No. of Claims : 49

(12) PATENT APPLICATION PUBLICATION
(19) INDIA
(22) Date of filing of Application :13/08/2014
(21) Application No.1684/KOLNP/2014 A
(43) Publication Date : 23/10/2015

(54) Title of the invention : DRIVE CONTROL APPARATUS ELECTRONIC DEVICE AND DRIVE CONTROL METHOD

(51) International classification :G06F3/048,G06F3/01
(31) Priority Document No :NA
(32) Priority Date :NA
(33) Name of priority country :NA
(86) International Application No :PCT/JP2013/076054
Filing Date :26/09/2013
(87) International Publication No :WO 2015/045059
(61) Patent of Addition to Application Number :NA
Filing Date :NA
(62) Divisional to Application Number :NA
Filing Date :NA

(71)**Name of Applicant :**
1)FUJITSU LIMITED
Address of Applicant :1 1 Kamikodanaka 4 chome Nakahara ku Kawasaki shi Kanagawa 2118588 Japan
(72)**Name of Inventor :**
1)KAMATA Yuichi
2)TANINAKA Kiyoshi
3)ENDO Yasuhiro

(57) Abstract :
This invention addresses the problem of providing a drive control apparatus an electronic device and a drive control method that can provide good tactile feedback. This drive control apparatus drives a first vibrating element in an electronic device that has a display panel a touch panel provided on the display surface side of said display panel and the aforementioned first vibrating element which vibrates a touch operation surface via which touch operations are inputted to the touch panel. Said drive control apparatus has a drive control unit that drives the vibrating element using a drive signal that produces ultrasonic resonance in the touch operation surface. Said drive control unit drives the vibrating element such that the intensity of the ultrasonic resonance varies in accordance with the location of touch operation input to the touch operation surface and the degree to which said location varies over time.

No. of Pages : 58 No. of Claims : 9

(12) PATENT APPLICATION PUBLICATION
(19) INDIA
(22) Date of filing of Application :13/08/2014
(21) Application No.1685/KOLNP/2014 A
(43) Publication Date : 23/10/2015

(54) Title of the invention : MODELLING OF A CAST ROLLING DEVICE

(51) International classification :B22D11/18,B22D11/22,B22D11/06
(31) Priority Document No :12157728.2
(32) Priority Date :01/03/2012
(33) Name of priority country :EPO
(86) International Application No :PCT/EP2013/054129
Filing Date :01/03/2013
(87) International Publication No :WO 2013/127982
(61) Patent of Addition to Application Number :NA
Filing Date :NA
(62) Divisional to Application Number :NA
Filing Date :NA

(71)**Name of Applicant :**
1)SIEMENS AKTIENGESELLSCHAFT
Address of Applicant :Wittelsbacherplatz 2 80333 München Germany
(72)**Name of Inventor :**
1)DAGNER Johannes
2)MATSCHULLAT Thomas
3)WINTER Günther

(57) Abstract :
A computer (11) determines the temperatures (TO) occurring along a respective rotation part of the respective surface elements (6) of the rotary elements (3 5) and a rotary element shape (dU) which forms in the region of a draw off point (P2) on the respective surface element (6) by means of a respective rotary element model (16) and using an exchanged enthalpy quantity (E1 + E2) the respective contact time (t2) with a metal (8) and a respective cycle time (t1) exchanged per time unit of a respective rotary element (3 5) of a casting device with the environment thereof. The computer (11) determines the temperature (TM) of the metal (8) situated in the die region (2) and adjoining the respective surface element (6) and the heat flow (F) from the metal (8) adjoining the respective surface element (6) to the respective surface element (6) by means of a respective metallurgical solidification model (17) and using a metal temperature (T) the temperatures (TO) of the surface elements (6) occurring the rotary element shape (dU) and the characteristic values (K) specifying the metal (8) as such and further using a respective heat transfer model (19) that models the heat transfer from the die region (2) to the respective surface element (6). From all said values the computer determines in conjunction with the circumferential speed (v) of the surface elements (6) the respective strand shell thickness (dS) which forms at the draw off point (P2). The computer (11) determines the thickness (d) and/or the temperature (T) of the metal band (1) withdrawn from the die region (2) by means of a band formation model (20) and using the temperatures (TM) the strand shell thicknesses (dS) and the rotary element shapes (dU).

No. of Pages : 43 No. of Claims : 14

(12) PATENT APPLICATION PUBLICATION
(19) INDIA
(22) Date of filing of Application :07/07/2014
(21) Application No.1430/KOLNP/2014 A
(43) Publication Date : 23/10/2015

(54) Title of the invention : GASIFICATION SYSTEM

(51) International classification :C10J3/02,C10J3/26,C10J3/30
(31) Priority Document No :2011282094
(32) Priority Date :22/12/2011
(33) Name of priority country :Japan
(86) International Application No :PCT/JP2012/075604
Filing Date :03/10/2012
(87) International Publication No :WO 2013/094279
(61) Patent of Addition to Application Number :NA
Filing Date :NA
(62) Divisional to Application Number :NA
Filing Date :NA

(71)**Name of Applicant :**
1)YANMAR CO. LTD.
Address of Applicant :1 9 Tsurunocho Kita ku Osaka shi Osaka 5308311 Japan
(72)**Name of Inventor :**
1)WAKIZAKA Hiroaki
2)AKASAKA Futoshi
3)SATO Kazuo
4)NARUMI Yoshinari

(57) Abstract :
The present invention is provided with a gasification furnace for gasifying a fuel and a fuel supply device for supplying fuel to the gasification furnace. The gasification furnace is provided with an inner cylinder for introducing fuel and air inside the gasification furnace. In addition a detection means and a control device are provided. The detection means sets a predetermined height position from a lower end opening inside the inner cylinder to an inner furnace level target value (H1) and detects the accumulation height of fuel that has accumulated inside the inner cylinder as an inner furnace level (H). The control device determines the deviation between the inner furnace level target value (H1) and the inner furnace level (H) and controls the fuel supply device according to the deviation in such a manner that the inner furnace level coincides with the inner furnace target value.

No. of Pages : 29 No. of Claims : 5

(12) PATENT APPLICATION PUBLICATION
(19) INDIA
(22) Date of filing of Application :31/07/2014
(21) Application No.1607/KOLNP/2014 A
(43) Publication Date : 23/10/2015

(54) Title of the invention : PREPARATION OF OPTICALLY PURE ß AMINO ACID TYPE ACTIVE PHARMACEUTICAL INGREDIENTS AND INTERMEDIATES THEREOF

(51) International classification	:C07C211/27,C07C231/06,C07C239/20
(31) Priority Document No	:12150892.3
(32) Priority Date	:12/01/2012
(33) Name of priority country	:EPO
(86) International Application No	:PCT/EP2013/050518
Filing Date	:11/01/2013
(87) International Publication No	:WO 2013/104774
(61) Patent of Addition to Application Number	:NA
Filing Date	:NA
(62) Divisional to Application Number	:NA
Filing Date	:NA

(71)**Name of Applicant :**
1)LEK PHARMACEUTICALS D.D.
Address of Applicant :Verovskova 57 1526 Ljubljana Slovenia
(72)**Name of Inventor :**
1)STAVBER Gaj
2)CASAR Zdenko

(57) Abstract :
The present invention relates to the preparation of optically resolved chiral compounds of ß amino acid type active pharmaceutical ingredients (API) more specifically to ß aminobutyryl substituted compounds and especially ß aminobutyryl compounds having bound aryl groups. The present invention more particularly relates to the preparation of enantiomerically enriched chiral compounds useful as intermediates for the preparation of anti diabetic agents preferably sitagliptin.

No. of Pages : 39 No. of Claims : 17

(12) PATENT APPLICATION PUBLICATION
(21) Application No.1710/KOLNP/2014 A
(19) INDIA
(22) Date of filing of Application :14/08/2014
(43) Publication Date : 23/10/2015

(54) Title of the invention : MME RESTORATION

(51) International classification :H04W24/04
(31) Priority Document No :61/589883
(32) Priority Date :24/01/2012
(33) Name of priority country :U.S.A.
(86) International Application No :PCT/EP2012/060080
Filing Date :30/05/2012
(87) International Publication No :WO 2013/110352
(61) Patent of Addition to Application Number :NA
Filing Date :NA
(62) Divisional to Application Number :NA
Filing Date :NA

(71)**Name of Applicant :**
1)TELEFONAKTIEBOLAGET L M ERICSSON (PUBL)
Address of Applicant :S 164 83 Stockholm Sweden
(72)**Name of Inventor :**
1)OLSSON Lars Bertil
2)SUNDELL Hans Olof

(57) Abstract :
There is provided a method for a mobility management entity MME (MME_1) in a pool of MMEs (MME_1; MME_2; MME_3) being adapted for communicating with at least one other MME (MME_2) in the pool of MMEs the MME (MME_1) moreover being adapted for communicating with a serving gateway SGW (S_GW) the MME (MME_1) managing the mobility of user entities (UE) for establishing packet data communication between the serving gateway and user entities UEs via at least a base station (eNB). The method comprises the steps of establishing (400) a UE context for a user entity; appointing (404) a back up MME for holding a duplicate context of the user entity; informing (406) the SGW in which MME a duplicate context is held or is to be held; and transmitting (408) a duplicate context to the appointed MME. Further a method for serving gateway SGW is provided as well as MME and a SGW.

No. of Pages : 40 No. of Claims : 30

(12) PATENT APPLICATION PUBLICATION
(21) Application No.1759/KOLNP/2014 A
(19) INDIA
(22) Date of filing of Application :21/08/2014
(43) Publication Date : 23/10/2015

(54) Title of the invention : METHOD FOR PREVENTING AND RECOGNISING COOLANT DISCHARGES FROM COMPLEX HYDRAULIC SYSTEMS

(51) International classification :B60H1/00,F25B45/00,F25B49/00
(31) Priority Document No :10 2012 001 906.8
(32) Priority Date :27/01/2012
(33) Name of priority country :Germany
(86) International Application No :PCT/DE2013/000050
Filing Date :23/01/2013
(87) International Publication No :WO 2013/110265
(61) Patent of Addition to Application Number :NA
Filing Date :NA
(62) Divisional to Application Number :NA
Filing Date :NA

(71)**Name of Applicant :**
1)DÜRR SOMAC GMBH
Address of Applicant :Zwickauer Strasse 30 09366 Stollberg Germany
(72)**Name of Inventor :**
1)NEUBERT Dieter
2)DIETEL Dany
3)ULBRICHT Olaf
4)GRIMM Andre
5)ACHATZ Thomas
6)WIELAND Frank

(57) Abstract :
The invention relates to a method for preventing and recognising coolant discharges from complex hydraulic systems. The aim of the invention is to configure such a method in such a way that said method in particular meets requirements for preventing/limiting the production of explosive atmospheres in working areas and for reducing measures previously customarily required for Ex zones. Said aim is achieved in that a circuit conveying coolant is divided into small volumes that have closing valves (1) and a safety valve (4) wherein a leak recognition diagnosis can be carried out by means of a pressure sensor (3) that can be integrated.

No. of Pages : 8 No. of Claims : 5

(12) PATENT APPLICATION PUBLICATION
(21) Application No.1760/KOLNP/2014 A
(19) INDIA
(22) Date of filing of Application :21/08/2014
(43) Publication Date : 23/10/2015

(54) Title of the invention : CLOSED FORCE TRANSMISSION DEVICE AND SAFETY DOOR LOCK USING SAME

(51) International classification :E05B55/14,E05B59/04
(31) Priority Document No :10-2012-0019232
(32) Priority Date :24/02/2012
(33) Name of priority country :Republic of Korea
(86) International Application No :PCT/KR2012/001874
Filing Date :15/03/2012
(87) International Publication No :WO 2013/125746
(61) Patent of Addition to Application Number :NA
Filing Date :NA
(62) Divisional to Application Number :NA
Filing Date :NA

(71)**Name of Applicant :**
1)KIM, YOUNG HEE
Address of Applicant :105-1201 DAEU APT DADAE-DONG SAHA-GU BUSAN-SI S 640-050 REPUBLIC OF KOREA.
(72)**Name of Inventor :**
1)KIM, YOUNG HEE

(57) Abstract :
The present invention relates to a closed force transmission device in which an insertion depth of a latch bolt inserted into a latch bolt insertion groove can be adjusted to improve safety and components are simplified to allow for ease of assembly and to improve durability. The present invention also relates to a safety door lock using the device. The closed force transmission device of the present invention comprises: a cylindrical body housing of which both sides are opened to penetrate a door; a main body slidably arranged within the body housing such that the main body moves in a straight line direction by the force applied from an external source, the main body having at least one tilt surface and a main body movement space formed orthogonally to the straight movement direction in a portion corresponding to the tilt surface; a handle connected to the main body and protruded outwardly from both sides of the door; and a latch bolt assembly one end of which passes through the main body movement space and is coupled to the main body such that one end is vertically movable relatively to the movement direction of the main body and the other end of which is elastically supported at the body housing such that the other end is movable orthogonally to the movement direction of the main body in interlock with the straight line movement of the main body.

No. of Pages : 43 No. of Claims : 19

(12) PATENT APPLICATION PUBLICATION
(19) INDIA
(22) Date of filing of Application :14/08/2014
(21) Application No.1700/KOLNP/2014 A
(43) Publication Date : 23/10/2015

(54) Title of the invention : PROCESS FOR PREPARING 2 CHLORO 3 3 3 TRIFLUOROPROPENE

(51) International classification :C07C17/20,C07C17/25
(31) Priority Document No :61/614102
(32) Priority Date :22/03/2012
(33) Name of priority country :U.S.A.
(86) International Application No :PCT/JP2013/059161
Filing Date :21/03/2013
(87) International Publication No :WO 2013/141409
(61) Patent of Addition to Application Number :NA
Filing Date :NA
(62) Divisional to Application Number :NA
Filing Date :NA

(71)**Name of Applicant :**
1)DAIKIN INDUSTRIES LTD.
Address of Applicant :Umeda Center Building 4 12 Nakazaki Nishi 2 Chome Kita ku Osaka shi Osaka 5308323 Japan
(72)**Name of Inventor :**
1)KISHIMOTO Masayuki
2)KOMATSU Yuzo

(57) Abstract :
Provided is a process for preparing 2 chloro 3 3 3 trifluoropropene wherein at least one chlorine containing compound selected from the group consisting of chloropropane represented by formula (1): CXCHClCHCl wherein each X is the same or different and each represents Cl or F chloropropene represented by formula (2): CClYCCl=CH wherein each Y is the same or different and each represents Cl or F and chloropropene represented by formula (3): CZ=CClCHCl wherein each Z is the same or different and each represents Cl or F is used as a starting compound and said at least one chlorine containing compound is reacted with hydrogen fluoride while being heated in a gaseous state in the presence of 50 ppm or more of water relative to the chlorine containing compound. The process of the present invention makes it possible to produce 2 chloro 3 3 3 trifluoropropene (HCFO 1233xf) in a manner that is easily conducted economically advantageous and suitable for industrial scale production.

No. of Pages : 17 No. of Claims : 3

(12) PATENT APPLICATION PUBLICATION
(19) INDIA
(22) Date of filing of Application :31/07/2014
(21) Application No.1608/KOLNP/2014 A
(43) Publication Date : 23/10/2015

(54) Title of the invention : BATTERY POWERED LIGHT LEVEL SENSING DEVICE

(51) International classification :H05B37/02
(31) Priority Document No :1200999.9
(32) Priority Date :20/01/2012
(33) Name of priority country :U.K.
(86) International Application No :PCT/GB2013/050133
Filing Date :21/01/2013
(87) International Publication No :WO 2013/108053
(61) Patent of Addition to Application Number :NA
Filing Date :NA
(62) Divisional to Application Number :NA
Filing Date :NA

(71)**Name of Applicant :**
1)C.P. ELECTRONICS LIMITED
Address of Applicant :Brent Crescent London Greater London NW10 7XR U.K.
(72)**Name of Inventor :**
1)MANS Paul
2)MILNER Merlin

(57) Abstract :
A battery powered light level sensing device comprises a light level sensor 1 and a wireless transmitter 3 in data communication with the light level sensor and configured to transmit light level information from the light level sensor 1 to a lighting controller for a room. The sensing device also includes attachment means adapted to attach the sensing device to the glass of a window defining a boundary of the room with the light level sensor positioned to sense the ambient light level outside the room.

No. of Pages : 15 No. of Claims : 7

(12) PATENT APPLICATION PUBLICATION
(19) INDIA
(22) Date of filing of Application :31/07/2014
(21) Application No.1609/KOLNP/2014 A
(43) Publication Date : 23/10/2015

(54) Title of the invention : DETECTOR

(51) International classification :G08B13/19,H05B37/02
(31) Priority Document No :1201002.1
(32) Priority Date :20/01/2012
(33) Name of priority country :U.K.
(86) International Application No :PCT/GB2013/050132
Filing Date :21/01/2013
(87) International Publication No :WO 2013/108052
(61) Patent of Addition to Application Number :NA
Filing Date :NA
(62) Divisional to Application Number :NA
Filing Date :NA

(71)**Name of Applicant :**
1)C.P. ELECTRONICS LIMITED
Address of Applicant :Brent Crescent London Greater London NW10 7XR U.K.
(72)**Name of Inventor :**
1)MANS Paul
2)MILNER Merlin

(57) Abstract :
Embodiments of the present invention relate to a detector (100) suitable for attaching to a light fitting. The detector comprises a passive infrared sensor (102) and a clip (128) suitable for suspending the detector from a light fitting.

No. of Pages : 12 No. of Claims : 9

(12) PATENT APPLICATION PUBLICATION
(19) INDIA
(22) Date of filing of Application :18/08/2014
(21) Application No.1712/KOLNP/2014 A
(43) Publication Date : 23/10/2015

(54) Title of the invention : TRANSFORM COEFFICIENT CODING

(51) International classification :H03M7/40
(31) Priority Document No :61/588846
(32) Priority Date :20/01/2012
(33) Name of priority country :U.S.A.
(86) International Application No :PCT/EP2013/051053
Filing Date :21/01/2013
(87) International Publication No :WO 2013/107908
(61) Patent of Addition to Application Number :NA
Filing Date :NA
(62) Divisional to Application Number :NA
Filing Date :NA

(71)**Name of Applicant :**
1)FRAUNHOFER GESELLSCHAFT ZUR FÖRDERUNG DER ANGEWANDTEN FORSCHUNG E.V.
Address of Applicant :Hansastraße 27c 80686 München Germany
(72)**Name of Inventor :**
1)NGUYEN Tung
2)KIRCHHOFFER Heiner
3)MARPE Detlev

(57) Abstract :
An idea used herein is to use the same function for the dependency of the context and the dependency of the symbolization parameter on previously coded/decoded transform coefficients. Using the same function with varying function parameter may even be used with respect to different transform block sizes and/or frequency portions of the transform blocks in case of the transform coefficients being spatially arranged in transform blocks. A further variant of this idea is to use the same function for the dependency of a symbolization parameter on previously coded/decoded transform coefficients for different sizes of the current transform coefficient s transform block different information component types of the current transform coefficient s transform block and/or different frequency portions the current transform coefficient is located within the transform block.

No. of Pages : 75 No. of Claims : 57

(12) PATENT APPLICATION PUBLICATION
(19) INDIA
(22) Date of filing of Application :18/08/2014
(21) Application No.1713/KOLNP/2014 A
(43) Publication Date : 23/10/2015

(54) Title of the invention : PHARMACEUTICAL COMPOSITION FOR TREATMENT AND/OR PREVENTION OF CANCER

(51) International classification	:C07K16/30,A61K39/395,A61P35/00
(31) Priority Document No	:2012035484
(32) Priority Date	:21/02/2012
(33) Name of priority country	:Japan
(86) International Application No	:PCT/JP2013/054337
Filing Date	:21/02/2013
(87) International Publication No	:WO 2013/125636
(61) Patent of Addition to Application Number	:NA
Filing Date	:NA
(62) Divisional to Application Number	:NA
Filing Date	:NA

(71)**Name of Applicant :**
1)TORAY INDUSTRIES INC.
Address of Applicant :1 1 Nihonbashi Muromachi 2 chome Chuo ku Tokyo 1038666 Japan
(72)**Name of Inventor :**
1)KOBAYASHI Shinichi
2)OKANO Fumiyoshi
3)SAITO Takanori

(57) Abstract :
The present invention discloses an antibody that targets a cancer antigen protein expressed specifically on the surface of cancer cells and the application of the antibody in a treatment and/or preventative agent for said cancer. Specifically disclosed are: an antibody or a fragment thereof said antibody being immunologically reactive with a partial polypeptide of CAPRIN 1 comprising the amino acid sequence represented by SEQ ID NO: 5 or an amino acid sequence having 80% or more sequence identity to the amino acid sequence represented by SEQ ID NO: 5; and a pharmaceutical composition for the treatment and/or prevention of cancer said pharmaceutical composition being characterized by containing as an active ingredient the antibody or a fragment thereof.

No. of Pages : 89 No. of Claims : 11

(12) PATENT APPLICATION PUBLICATION
(21) Application No.1739/KOLNP/2014 A
(19) INDIA
(22) Date of filing of Application :19/08/2014
(43) Publication Date : 23/10/2015

(54) Title of the invention : VOICE FREQUENCY SIGNAL PROCESSING METHOD AND DEVICE

(51) International classification :G10L19/00
(31) Priority Document No :201210051672.6
(32) Priority Date :01/03/2012
(33) Name of priority country :China
(86) International Application No :PCT/CN2013/072075
Filing Date :01/03/2013
(87) International Publication No :WO 2013/127364
(61) Patent of Addition to Application Number :NA
Filing Date :NA
(62) Divisional to Application Number :NA
Filing Date :NA

(71)**Name of Applicant :**
1)HUAWEI TECHNOLOGIES CO. LTD.
Address of Applicant :Huawei Administration Building Bantian Longgang Shenzhen Guangdong 518129 China
(72)**Name of Inventor :**
1)LIU Zexin
2)MIAO Lei

(57) Abstract :
Disclosed in an embodiment of the present invention are a voice frequency signal processing method and device the voice frequency signal processing method in the embodiment comprising: when a voice frequency signal switches bandwidth acquiring an initial high frequency band signal corresponding to the current frame of the voice frequency signal; acquiring the time domain global gain parameter of the initial high frequency band signal; weighting an energy ratio and the time domain global gain parameter and using the obtained weighted value as a predicted global gain parameter the energy ratio being the ratio between the energy of a historical frame of the high frequency band time domain signal and the energy of the current frame of the initial high frequency band signal; utilizing the predicted global gain parameter to correct the initial high frequency band signal and acquiring a corrected high frequency band time domain signal; synthesizing a current frame of narrow frequency band time domain signal and the corrected high frequency band time domain signal and outputting the synthesized result.

No. of Pages : 49 No. of Claims : 23

(12) PATENT APPLICATION PUBLICATION
(19) INDIA
(22) Date of filing of Application :21/08/2014
(21) Application No.1763/KOLNP/2014 A
(43) Publication Date : 23/10/2015

(54) Title of the invention : CONTROLLING A SWITCHED MODE POWER SUPPLY WITH MAXIMISED POWER EFFICIENCY

(51) International classification :H02M3/156,H02M3/335
(31) Priority Document No :NA
(32) Priority Date :NA
(33) Name of priority country :NA
(86) International Application No :PCT/EP2012/051429
Filing Date :30/01/2012
(87) International Publication No :WO 2013/113354
(61) Patent of Addition to Application Number :NA
Filing Date :NA
(62) Divisional to Application Number :NA
Filing Date :NA

(71)**Name of Applicant :**
1)TELEFONAKTIEBOLAGET LM ERICSSON (PUBL)
Address of Applicant :S 164 83 Stockholm Sweden
(72)**Name of Inventor :**
1)KARLSSON Magnus
2)PERSSON Oscar

(57) Abstract :
A control circuit (200) operable to generate a control signal (D) to control the duty cycle of a switched mode power supply (100). The control circuit (200) comprises a reference voltage generator (201) operable in a first mode to generate a predetermined reference signal (V Rdes) and operable in a second mode to receive a signal indicative of an input voltage (Vin) of the switched mode power supply (100) and generate a variable reference signal (V Rvar) dependent upon the input voltage (V in) the reference voltage generator (201) being configured to operate in the first mode when the input voltage (V in) exceeds a threshold value and to operate in the second mode when the input voltage (Vin) is equal to or smaller than said threshold value. The control circuit (200) further comprises an error signal generator (202) operable to receive a signal indicative of an output voltage (V out) of the switched mode power supply (100) and operable to generate an error signal (V) based on the reference signal (V R; V Rvar V Rdes) generated by the reference voltage generator (201) and based on the output voltage (V out). The control circuit (200) also includes a duty cycle control signal generator (204) operable to generate the control signal (D) to control the duty cycle of the switched mode power supply (100) in dependence upon the error signal (V E).

No. of Pages : 47 No. of Claims : 19

(12) PATENT APPLICATION PUBLICATION
(19) INDIA
(22) Date of filing of Application :21/08/2014
(21) Application No.1764/KOLNP/2014 A
(43) Publication Date : 23/10/2015

(54) Title of the invention : METHOD APPARATUS AND SYSTEM FOR USING COMMON AND DEMODULATION PILOT SIGNALS IN MULTI ANTENNA WIRELESS COMMUNICATIONS

(51) International classification	:H04L5/00,H04B7/06,H04L25/02
(31) Priority Document No	:61/592151
(32) Priority Date	:30/01/2012
(33) Name of priority country	:U.S.A.
(86) International Application No	:PCT/SE2013/050054
Filing Date	:24/01/2013
(87) International Publication No	:WO 2013/115708
(61) Patent of Addition to Application Number	:NA
Filing Date	:NA
(62) Divisional to Application Number	:NA
Filing Date	:NA

(71)**Name of Applicant :**
1)TELEFONAKTIEBOLAGET L M ERICSSON (PUBL)
Address of Applicant :SE 164 83 Stockholm Sweden
(72)**Name of Inventor :**
1)NAMMI Sairamesh
2)CHAPMAN Thomas
3)GÖRANSSON Bo

(57) Abstract :
Multiple antennas employed at transmitting and receiving nodes (410,420) can significantly increase a MIMO system capacity especially when channel knowledge of link(s) between the transmitting and receiving nodes (410,420) is available at the transmitting node (410). Channel knowledge may be acquired through feedback provided by the receiving node (420) based on a plurality of common pilots transmitted by the transmitting node (410). The common pilots may include legacy and non legacy pilots. If the feedback indicates that data demodulation at the receiving node (420) can be enhanced the transmitting node (410) may also transmit demodulation pilot signal(s) which may coincide with the transmission of data. The receiving node (420) can use the demodulation pilot signal(s) alone or with the common pilot signal(s) to demodulate data received from the transmitting node (420). The transmitting node (410) may notify the receiving node (420) to monitor for the demodulation pilot signal(s) through higher layer signaling and/or scheduling orders over a control channel.

No. of Pages : 71 No. of Claims : 32

(12) PATENT APPLICATION PUBLICATION
(21) Application No.1703/KOLNP/2014 A
(19) INDIA
(22) Date of filing of Application :14/08/2014
(43) Publication Date : 23/10/2015

(54) Title of the invention : METHOD FOR DETERMINING A BRAKE PRESSURE VALUE ON THE BASIS OF CHARACTERISTIC CURVES

(51) International classification :B60T7/12,B60T8/32,B60T8/88
(31) Priority Document No :10 2012 003 106.8
(32) Priority Date :16/02/2012
(33) Name of priority country :Germany
(86) International Application No :PCT/EP2013/052926
Filing Date :14/02/2013
(87) International Publication No :WO 2013/120928
(61) Patent of Addition to Application Number :NA
Filing Date :NA
(62) Divisional to Application Number :NA
Filing Date :NA

(71)**Name of Applicant :**
1)KNORR BREMSE SYSTEME FÜR NUTZFAHRZEUGE GMBH
Address of Applicant :Moosacher Str. 80 80809 München Germany
(72)**Name of Inventor :**
1)SCHREITER Markus

(57) Abstract :
The invention relates to a method for determining the brake pressure value of the brake pressure in a braking device of a motor vehicle without using a brake pressure sensor said brake pressure being controlled by a pneumatic channel (12) of a braking value provider (10) that also has at least one electrical channel (14) wherein electrical signals representing desired brake pressure values are produced by at least one electrical sensor associated with the electrical channel in accordance with actuations of the brake value provider (10) wherein a) a first characteristic curve (28) is determined and stored in which the dependency of the electrical signals controlled by the at least one electrical sensor of the electrical channel (14) on the degree of actuation of the brake value provider (10) is represented and b) a second characteristic curve (30) is determined and stored in which the dependency of the brake pressure values controlled by the at least one pneumatic channel (12) on the electrical signals detected by the electrical sensor is represented wherein c) the brake pressure value corresponding to a certain brake request by actuation of the brake value provider (10) is determined on the basis of the first characteristic curve (28) and the second characteristic curve (30).

No. of Pages : 24 No. of Claims : 14

(12) PATENT APPLICATION PUBLICATION
(19) INDIA
(22) Date of filing of Application :22/08/2014
(21) Application No.870/KOL/2014 A
(43) Publication Date : 23/10/2015

(54) Title of the invention : PLASTIC FILM PUNCHING APPARATUS

(51) International classification	:B31B1/14 B31B23/14
(31) Priority Document No	:2013-179442
(32) Priority Date	:30/08/2013
(33) Name of priority country	:Japan
(86) International Application No	:NA
Filing Date	:NA
(87) International Publication No	: NA
(61) Patent of Addition to Application Number	:NA
Filing Date	:NA
(62) Divisional to Application Number	:NA
Filing Date	:NA

(71)**Name of Applicant :**
1)TOTANI CORPORATION
Address of Applicant :4-44, NAKAKUZE-CHO, KUZE, MINAMI-KU, KYOTO-SHI, KYOTO 601-8213 JAPAN
(72)**Name of Inventor :**
1)YUJI OHNISHI
2)SHOICHI SAWADA

(57) Abstract :
A plastic film punching apparatus is improved to prevent a waste 15 from being caught in a cylindrical punch blade 2. The apparatus includes a punch blade 2 comprising a saw-toothed edge which includes mountain portions and valley portions formed alternately with each other. A protrusion 5 is disposed internally of the punch blade 2 to protrude beyond the position of height H1 of the bottoms 7 of valley portions and toward the position of height H2 of the tops 6 of mountain portions. An annular clearance 8 is formed between the punch blade 2 and the protrusion 5.

No. of Pages : 16 No. of Claims : 6

(12) PATENT APPLICATION PUBLICATION
(19) INDIA
(22) Date of filing of Application :04/07/2014
(21) Application No.1420/KOLNP/2014 A
(43) Publication Date : 23/10/2015

(54) Title of the invention : NOVEL ANTIBIOTIC PREPARATION METHOD AND PLATFORM SYSTEM BASED ON SAME

(51) International classification	:C07K19/00,C12N15/62,C12N15/63
(31) Priority Document No	:201110405775.3
(32) Priority Date	:08/12/2011
(33) Name of priority country	:China
(86) International Application No	:PCT/CN2012/086296
Filing Date	:10/12/2012
(87) International Publication No	:WO 2013/083095
(61) Patent of Addition to Application Number	:NA
Filing Date	:NA
(62) Divisional to Application Number	:NA
Filing Date	:NA

(71)**Name of Applicant :**
1)PROTEIN DESIGN LAB LTD.
Address of Applicant :East 1000 Meters Qianshajiancun Sujiatuozhen Haidian District Beijing 100095 China
(72)**Name of Inventor :**
1)QIU Xiaoqing

(57) Abstract :
Provided are a novel antibiotic preparation method and platform system based on the method belonging to a novel drug development method. The method is based on a fixed structural formula: F R wherein F is an effect area and R is an identification area. At the prior art level the present invention can quickly develop a specific novel antibiotic for most pathogenic microorganisms or biological cells. Also provided is a platform for implementing the method ensuring that the novel antibiotic is developed in an efficient streamlined process.

No. of Pages : 72 No. of Claims : 11

(12) PATENT APPLICATION PUBLICATION
(21) Application No.1639/KOLNP/2014 A
(19) INDIA
(22) Date of filing of Application :06/08/2014
(43) Publication Date : 23/10/2015

(54) Title of the invention : POLYPROPYLENE COMPOSITION WITH IMPROVED SEALING AND THERMAL PROPERTIES

(51) International classification :C08L23/10
(31) Priority Document No :12157060.0
(32) Priority Date :27/02/2012
(33) Name of priority country :EPO
(86) International Application No :PCT/EP2013/053761
Filing Date :26/02/2013
(87) International Publication No :WO 2013/127758
(61) Patent of Addition to Application Number :NA
Filing Date :NA
(62) Divisional to Application Number :NA
Filing Date :NA

(71)**Name of Applicant :**
1)BOREALIS AG
Address of Applicant :IZD Tower Wagramerstraße 17 19 A 1220 Vienna Austria
(72)**Name of Inventor :**
1)REICHELT Kristin
2)PAAVILAINEN Juha
3)PARKINSON Matthew

(57) Abstract :
The present invention relates to a polypropylene composition comprising comonomer units derived from ethylene in an amount of from 0.5 wt% to 25 wt% and from at least one C 5-12 alpha olefin in an amount of from 1.0 mol% to 3.0 mol% wherein the polypropylene composition has an amount of xylene solubles XS of at least 20 wt% and the xylene solubles have an amount of ethylene derived comonomer units of from 4 wt% to 50 wt%.

No. of Pages : 36 No. of Claims : 13

(12) PATENT APPLICATION PUBLICATION
(19) INDIA
(22) Date of filing of Application :06/08/2014
(21) Application No.1640/KOLNP/2014 A
(43) Publication Date : 23/10/2015

(54) Title of the invention : ROTOR AND RELUCTANCE MOTOR

(51) International classification :H02K1/24,H02K15/02,H02K19/06
(31) Priority Document No :10 2012 202 017.9
(32) Priority Date :10/02/2012
(33) Name of priority country :Germany
(86) International Application No :PCT/EP2013/051886
Filing Date :31/01/2013
(87) International Publication No :WO 2013/117480
(61) Patent of Addition to Application Number :NA
Filing Date :NA
(62) Divisional to Application Number :NA
Filing Date :NA

(71)**Name of Applicant :**
1)KSB AKTIENGESELLSCHAFT
Address of Applicant :Johann Klein Strasse 9 67227 Frankenthal Germany
(72)**Name of Inventor :**
1)GONTERMANN Daniel
2)SCHAAB Jochen
3)SCHULLERER Joachim

(57) Abstract :
The invention relates to a rotor for a synchronous machine in particular a reluctance machine comprising a cylindrically structured magnetically soft element wherein the magnetically soft element has openings for forming magnetic flux barriers which form an even number of salient magnetic poles wherein at least one opening is at least partially filled with a diamagnetic or paramagnetic medium. The invention also relates to a method for producing such a rotor and to the use of a rotor. The invention further relates to a reluctance motor in particular a synchronous reluctance motor that uses the rotor according to the invention.

No. of Pages : 21 No. of Claims : 13

(12) PATENT APPLICATION PUBLICATION
(19) INDIA
(22) Date of filing of Application :22/08/2014
(21) Application No.1768/KOLNP/2014 A
(43) Publication Date : 23/10/2015

(54) Title of the invention : CONCEALABLE FILM LAMINATE AND PACKAGING MATERIAL

(51) International classification :C08L77/00,B32B27/34,B65D65/02
(31) Priority Document No :2012038837
(32) Priority Date :24/02/2012
(33) Name of priority country :Japan
(86) International Application No :PCT/JP2013/054442
Filing Date :22/02/2013
(87) International Publication No :WO 2013/125665
(61) Patent of Addition to Application Number :NA
Filing Date :NA
(62) Divisional to Application Number :NA
Filing Date :NA

(71)**Name of Applicant :**
1)UNITIKA LTD.
Address of Applicant :50 Higashi Hommachi 1 chome Amagasaki shi Hyogo 6600824 Japan
(72)**Name of Inventor :**
1)MAEHARA Atsushi
2)NISHIMURA Hiroshi
3)ARAHIRA Atsushi

(57) Abstract :
This concealable film is characterized by containing 10 94 mass% of a crystalline polyamide resin 1 40 mass% of an amorphous polyamide resin and 5 50 mass% of titanium oxide the total thereof being 100 mass%.

No. of Pages : 46 No. of Claims : 13

(12) PATENT APPLICATION PUBLICATION
(19) INDIA
(22) Date of filing of Application :13/08/2014
(21) Application No.1696/KOLNP/2014 A
(43) Publication Date : 23/10/2015

(54) Title of the invention : METHOD AND APPARATUS FOR PREDISTORTING A SIGNAL

(51) International classification :H04B1/04,H03F1/32,H03F1/26
(31) Priority Document No :13/396250
(32) Priority Date :14/02/2012
(33) Name of priority country :U.S.A.
(86) International Application No :PCT/IB2013/050496
Filing Date :18/01/2013
(87) International Publication No :WO 2013/121308
(61) Patent of Addition to Application Number :NA
Filing Date :NA
(62) Divisional to Application Number :NA
Filing Date :NA

(71)**Name of Applicant :**
1)TELEFONAKTIEBOLAGET L M ERICSSON (PUBL)
Address of Applicant :Telefonplan 164 83 Stockholm Sweden
(72)**Name of Inventor :**
1)LOKAS Jadran

(57) Abstract :
A circuit (10) herein compensates an input signal (12) for distortion introduced to that signal by a nonlinear device (14). A predistorter (16) predistorts the input signal (12) based on a predistortion model to compensate for distortion introduced by the nonlinear device (14). When this predistorted input signal (22) is input into the nonlinear device (14) the device (14) produces an output signal (24) as a function of the predistorted input signal (22). From this output signal (24) a feedback generation circuit (18) generates a feedback signal (26) that includes one or more input signal components (26A) and one or more distortion components (26B). A selective attenuation circuit (30) selectively attenuates the input signal components (26A) in this feedback signal (26) to generate a modified version (32) of the feedback signal (26) with a reduced magnitude difference between the input signal components (26A) and the distortion components (26B). Finally a model adaptation circuit (20) dynamically adapts model parameters of the predistortion model based on the modified version (32) of the feedback signal (26).

No. of Pages : 22 No. of Claims : 22

(12) PATENT APPLICATION PUBLICATION
(19) INDIA
(22) Date of filing of Application :18/08/2014
(21) Application No.1715/KOLNP/2014 A
(43) Publication Date : 23/10/2015

(54) Title of the invention : MEDICINAL COMPOSITION FOR TREATING AND/OR PREVENTING CANCER

(51) International classification	:C07K16/30,A61K39/395,A61P35/00
(31) Priority Document No	:2012035238
(32) Priority Date	:21/02/2012
(33) Name of priority country	:Japan
(86) International Application No	:PCT/JP2013/054403
Filing Date	:21/02/2013
(87) International Publication No	:WO 2013/125654
(61) Patent of Addition to Application Number	:NA
Filing Date	:NA
(62) Divisional to Application Number	:NA
Filing Date	:NA

(71)**Name of Applicant :**
1)TORAY INDUSTRIES INC.
Address of Applicant :1 1 Nihonbashi Muromachi 2 chome Chuo ku Tokyo 1038666 Japan
(72)**Name of Inventor :**
1)OKANO Fumiyoshi
2)SAITO Takanori
3)IDO Takayoshi
4)MINAMIDA Yoshitaka

(57) Abstract :
The present invention provides an antibody targeting a cancer antigen protein that is specifically expressed on the surface of a cancer cell and the use of the antibody as a therapeutic and/or prophylactic agent for cancer. More specifically the present invention provides: an antibody or a fragment thereof that has an immunological reactivity with a CAPRIN 1 partial polypeptide comprising an amino acid sequence represented by SEQ ID NO:5 or an amino acid sequence having a sequence identity of 80% or greater with said amino acid sequence; and a medicinal composition for treating and/or preventing cancer said medicinal composition being characterized by comprising the aforesaid antibody or a fragment thereof as the active ingredient.

No. of Pages : 139 No. of Claims : 22

(12) PATENT APPLICATION PUBLICATION
(19) INDIA
(22) Date of filing of Application :18/08/2014
(21) Application No.1716/KOLNP/2014 A
(43) Publication Date : 23/10/2015

(54) Title of the invention : PHARMACEUTICAL COMPOSITION FOR TREATMENT AND/OR PREVENTION OF CANCER

(51) International classification :C07K16/30,A61K39/395,A61P35/00
(31) Priority Document No :2012035491
(32) Priority Date :21/02/2012
(33) Name of priority country :Japan
(86) International Application No :PCT/JP2013/054345
Filing Date :21/02/2013
(87) International Publication No :WO 2013/125640
(61) Patent of Addition to Application Number :NA
Filing Date :NA
(62) Divisional to Application Number :NA
Filing Date :NA

(71)**Name of Applicant :**
1)TORAY INDUSTRIES INC.
Address of Applicant :1 1 Nihonbashi Muromachi 2 chome Chuo ku Tokyo 1038666 Japan
(72)**Name of Inventor :**
1)KOBAYASHI Shinichi
2)OKANO Fumiyoshi
3)SAITO Takanori

(57) Abstract :
The present invention discloses an antibody that targets a cancer antigen protein expressed specifically on the surface of cancer cells and the application of the antibody in a treatment and/or preventative agent for said cancer. Specifically disclosed are: an antibody or a fragment thereof said antibody being immunologically reactive with a partial polypeptide of CAPRIN 1 comprising the amino acid sequence represented by SEQ ID NO: 5 or an amino acid sequence having 80% or more sequence identity to the amino acid sequence represented by SEQ ID NO: 5; and a pharmaceutical composition for the treatment and/or prevention of cancer said pharmaceutical composition being characterized by containing as an active ingredient the antibody or a fragment thereof.

No. of Pages : 102 No. of Claims : 12

(12) PATENT APPLICATION PUBLICATION
(19) INDIA
(22) Date of filing of Application :18/08/2014
(21) Application No.1717/KOLNP/2014 A
(43) Publication Date : 23/10/2015

(54) Title of the invention : HIGH SPEED COMMUNICATION JACK

(51) International classification :H01R13/6466
(31) Priority Document No :61/598288
(32) Priority Date :13/02/2012
(33) Name of priority country :U.S.A.
(86) International Application No :PCT/US2013/022919
Filing Date :24/01/2013
(87) International Publication No :WO 2013/122727
(61) Patent of Addition to Application Number :NA
Filing Date :NA
(62) Divisional to Application Number :NA
Filing Date :NA

(71)**Name of Applicant :**
1)SENTINEL CONNECTOR SYSTEMS INC.
Address of Applicant :1953 Stanton Street York Pennsylvania 17404 U.S.A.
(72)**Name of Inventor :**
1)ROBINSON Brett D.

(57) Abstract :
A high speed communication jack including a housing including a port for accepting a plug the port including a plurality of pins each connected to a corresponding signal line in the plug and a shielding case surrounding the housing. A flexible circuit board between the shielding case and the housing having a substrate a plurality of vias extending through the substrate with each via being configured to accommodate a pin on the housing a plurality of traces on a first side of the substrate with each trace extending from a corresponding one of the plurality of vias and a shielding plane on a second side of the substrate opposite the first side of the substrate.

No. of Pages : 27 No. of Claims : 20

Publication Under Section 43(2) in Respect of the Grant

Following Patents have been granted and any person interested in opposing these patents under Section 25(2) may at any time within one year from the date of this issue, give notice to the Controller of Patents at the appropriate office, on the prescribed form-7 along with written statement and evidence, if any.

Serial Number	Patent Number	Application Number	Date of Application	Date of Priority	Title of Invention	Name of Patentee	Date of Publication of Abstract u/s 11(A)	Appropriate Office
1	269334	2697/DELNP/2009	30/11/2007	01/12/2006	LIQUID FORMULATIONS OF CARBOXAMIDE ARTHROPODICIDES	E. I. DU PONT DE NEMOURS AND COMPANY	19/06/2009	DELHI
2	269336	4346/DELNP/2008	22/12/2006	22/12/2005	POLYPROPYLENE COMPOSITION COMPRISING A PROPYLENE HOMOPOLYMER COMPONENT	BOREALIS TECHNOLOGY OY	15/08/2008	DELHI
3	269337	3550/DELNP/2004	13/05/2003	13/05/2002	A DEVICE FOR VAPORIZING A DRUG	ALEXZA PHARMACEUTICALS INC.	04/12/2009	DELHI
4	269338	280/DELNP/2008	30/06/2006	11/07/2005	METHODS AND SYSTEMS TO ENHANCE FOAM GENERATION AND QUALITY THROUGH DISPENSER	NESTEC S.A	08/08/2008	DELHI
5	269343	6053/DELNP/2008	19/01/2007	03/02/2006	ACRYLIC RESIN FOR USE IN FLUOROCARBON COATING COMPOSITIONS AND METHOS OF FORMING THE SAME	BASF CORPORATION	15/08/2008	DELHI
6	269346	6717/DELNP/2008	02/02/2007	02/02/2006	ENGINEERED ANTIBODY-STRESS PROTEIN FUSIONS	THE GENERAL HOSPITAL CORPORATION	24/10/2008	DELHI
7	269353	3137/DELNP/2006	06/12/2004	16/12/2003	STAGED COMBUSTION METHOD WITH OPTIMIZED INJECTION OF PRIMARY OXIDANT	L'AIR LIQUIDE SOCIETE ANONYME A DIRECTOIRE ET CONSEIL DE SURVEILLANCE POUR L'ETUDE ET	24/08/2007	DELHI
8	269357	920/DELNP/2007	17/08/2004	17/08/2004	HANDOVER OF A MOBILE STATION.	NOKIA CORPORATION	03/08/2007	DELHI
9	269358	9885/DELNP/2007	26/05/2006	27/05/2005	BONE MORPHOGENETIC PROTEIN 4 AND OSTEOGENIC DEVICES AND PHARMACEUTICAL PRODUCTS CONTAINING THEREOF	BBS-BIOACTIVE BONE SUBSTITUTES OY	20/06/2008	DELHI
10	269359	5212/DELNP/2007	22/12/2005	22/12/2004	AUTOMATED PHARMACY ADMIXTURE SYSTEM (APAS)	INTELLIGENT HOSPITAL SYSTEMS INC.	17/08/2007	DELHI
11	269362	2492/DELNP/2004	31/01/2003	11/03/2002	A PROJECTILE	RAYTHEON COMPANY	09/10/2009	DELHI

12	269363	1488/DEL/2006	23/06/2006		BIO DIESEL MANUFACTURING PROCESS	SANJEEV SHARMA	11/06/2010	DELHI
13	269364	7020/DELNP/2008	22/02/2007	22/02/2006	POLYETHYLENE COMPOSITIONS AND PIPE MADE FROM SAME	CHEVRON PHILLIPS CHEMICAL COMPANY, LP	03/10/2008	DELHI
14	269365	7368/DELNP/2007	23/03/2006	24/03/2005	CONTROL SYSTEM METHOD AND APPARATUS FOR CONTINUOUS LIQUID PHASE HYDROPROCESSING	PROCESS DYNAMICS, INC.,	14/12/2007	DELHI
15	269366	7168/DELNP/2007	26/01/2004	28/01/2003	THIN AQUEOUS CATAPLASM	TEIKOKU SEIYAKU CO.,LTD.	14/12/2007	DELHI
16	269367	2166/DELNP/2009	03/09/2007	04/09/2006	ALUMINUM ALLOY AND METHOD FOR PRODUCING IT	ALUMINIUM LEND GESELLSCHAFT M.B.H.	20/08/2010	DELHI
17	269368	1978/DELNP/2009	03/10/2007	03/10/2006	PROCESS	INEOS FLOUR HOLDINGS LIMITED	19/06/2009	DELHI
18	269369	5345/DELNP/2009	21/02/2008	30/03/2007	SYSTEMS AND METHODS FOR FABRICATING POLYOLEFINS	UNIVATION TECHNOLOGIES, LLC.	23/04/2010	DELHI
19	269370	2378/DEL/2007	13/11/2007 15:39:23		A ENZYME COMPOSITION FOR CONTROLLING INVESTATION OF WOOLY APHID AND SOOTY MOULD ON SUGARCANE PLANT AND A METHOD OF TREATMENT THEREOF	COUNCIL OF SCIENTIFIC & INDUSTRIAL RESEARCH	19/06/2009	DELHI
20	269372	IN/PCT/2000/00411 /DEL	08/04/2000	10/04/1999	ANTIVIRAL PYRIMIDINEDIONE DERIVATIVES AND BPROCESS FOR THE PREPARATION THEREOF	SAMJIN PHARMACEUTICAL CO., LTD,	11/03/2005	DELHI
21	269373	2619/DEL/2009	16/12/2009 12:37:45	24/12/2008	NEW PROCESS FOR THE SYNTHESIS OF IVABRADINE AND ADDITION SALTS THEREOF WITH A PHARMACEUTICALLY ACCEPTABLE ACID	LES LABORATOIRES SERVIER,	16/07/2010	DELHI
22	269374	1508/DELNP/2010	26/08/2008	27/08/2007	ANTIVIRAL DRUGS FOR TREATMENT OF ARENA VIRUS INFECTION	SIGA TECHNOLOGIES, INC.	06/08/2010	DELHI
23	269375	7167/DELNP/2010	28/04/2009	29/04/2008	PERPROPIONIC ACID COMPOSITION THAT IS STABLE IN A BASIC MEDIUM	ARKEMA FRANCE	24/02/2012	DELHI
24	269376	2587/DELNP/2010	04/11/2008	09/11/2007	ORAL STANNOUS COMPOSITIONS	THE PROCTER & GAMBLE COMPANY	01/10/2010	DELHI

Publication Under Section 43(2) in Respect of the Grant

Following Patents have been granted and any person interested in opposing these patents under Section 25(2) may at any time within one year from the date of this issue, give notice to the Controller of Patents at the appropriate office, on the prescribed form-7 along with written statement and evidence, if any.

Serial Number	Patent Number	Application Number	Date of Application	Date of Priority	Title of Invention	Name of Patentee	Date of Publication of Abstract u/s 11(A)	Appropriate Office
1	269348	1943/MUMNP/2008	30/03/2007	31/03/2006	MULTIMODE, UNIFORM-LATENCY CLOCK GENERATION CIRCUIT	QUALCOMM INCORPORATED	26/06/2009	MUMBAI
2	269351	1881/MUMNP/2007	12/05/2006	13/05/2005	TRAFFIC ANALYSIS ON HIGH - SPEED NETWORKS	QOSMOS	07/12/2007	MUMBAI
3	269352	244/MUMNP/2009	03/07/2007	03/07/2006	A METHOD FOR COATING A STENT	HEMOTEQ AG	15/05/2009	MUMBAI
4	269355	1369/MUMNP/2009	23/01/2008	23/01/2007	ELECTRODE ARRAY FOR INSERTION INTO SOFT TISSUE OF AN ANIMAL	NEURONANO AB	08/01/2010	MUMBAI
5	269371	1678/MUMNP/2008	25/07/2007	25/07/2006	CELL SEARCH METHOD, FORWARD LINK FRAME TRANSMISSION METHOD, APPARATUS USING THE SAME AND FORWARD LINK FRAME STRUCTURE	ELECTRONICS AND TELECOMMUNICATIONS RESEARCH INSTITUTE	19/12/2008	MUMBAI

Publication Under Section 43(2) in Respect of the Grant

Following Patents have been granted and any person interested in opposing these patents under Section 25(2) may at any time within one year from the date of this issue, give notice to the Controller of Patents at the appropriate office, on the prescribed form-7 along with written statement and evidence, if any.

Serial Number	Patent Number	Application Number	Date of Application	Date of Priority	Title of Invention	Name of Patentee	Date of Publication of Abstract u/s 11(A)	Appropriate Office
1	269335	5716/CHENP/2008	20/04/2007	24/04/2006	METHOD OF PERFORMING A SYSTEM LEVEL TEST OF A FIRST INTELLIGENT ELECTRONIC DEVICE OF SUBSTATION AUTOMATION SYSTEM AND TEST ENVIRONMENT THEREFOR	ABB RESEARCH LTD.	27/03/2009	CHENNAI
2	269342	4885/CHENP/2007	16/03/2006	30/03/2005	AUDIO ENCODING AND DECODING	KONINKLIJKE PHILIPS ELECTRONICS N.V.	25/01/2008	CHENNAI
3	269344	1508/CHE/2007	13/07/2007 11:32:12		METHOD AND SYSTEM FOR STORING AND RETRIEVING DATA	ANURADHA VAIDYANATHAN	19/06/2009	CHENNAI
4	269356	1348/CHENP/2008	26/09/2006	28/09/2005	REACTOR AND METHOD FOR ANOXIC TREATMENT OF A MATERIAL IN A FLUID REACTION MEDIUM	COMMISSARIAT A L'ENERGIE ATOMIQUE	28/11/2008	CHENNAI

Publication Under Section 43(2) in Respect of the Grant

Following Patents have been granted and any person interested in opposing these patents under Section 25(2) may at any time within one year from the date of this issue, give notice to the Controller of Patents at the appropriate office, on the prescribed form-7 along with written statement and evidence, if any.

Serial Number	Patent Number	Application Number	Date of Application	Date of Priority	Title of Invention	Name of Patentee	Date of Publication of Abstract u/s 11(A)	Appropriate Office
1	269333	2652/KOLNP/2008	09/12/2006	23/12/2005	CONVEYOR BELT	TRANSNORM SYSTEM GMBH	30/01/2009	KOLKATA
2	269339	60/KOLNP/2010	07/07/2008	18/07/2007	A PROCESS FOR LIQUOR-PARTICULARLY WASTEWATER - AGITATION AND/OR AERATION	BIOWORKS VERFAHRENSTECHNIK GMBH	23/04/2010	KOLKATA
3	269340	3951/KOLNP/2008	26/05/2007	31/05/2006	NEW SYNTHESIS OF SUBSTITUTED HYDROXYMETHYL PHENOLS	SCHWARZ PHARMA LTD	27/02/2009	KOLKATA
4	269341	2717/KOLNP/2009	23/02/2008	19/03/2007	PALLADIUM-RHODIUM SINGLE-LAYER CATALYST	UMICORE AG & CO.KG	13/11/2009	KOLKATA
5	269345	784/KOLNP/2009	11/12/2007	18/12/2006	METHOD FOR THE HYDRO-PROCESSING OF A GAS OIL FEEDSTOCK AND CORRESPONDING HYDRO-REFINING UNIT	TOTAL RAFFINAGE MARKETING	15/05/2009	KOLKATA
6	269347	1343/KOLNP/2009	11/10/2007	11/10/2006	LIQUID RESIN AND METHOD OF PREPARING THE SAME	SAINT-GOBAIN ISOVER	29/05/2009	KOLKATA
7	269349	1275/KOL/2007	11/09/2007 15:54:38	11/09/2006	METHOD FOR TESTING AN ELECTRONIC CONTROL UNIT	DSPACE DIGITAL SIGNAL PROCESSING AND CONTROL ENGINEERING GMBH	01/05/2009	KOLKATA
8	269350	176/KOL/2007	06/02/2007	06/04/2006	METHOD FOR ESTIMATING POWER CAPABILITY OF A PRIMARY POWER SOURCE OF A HYBRID VEHICLE	GM GLOBAL TECHNOLOGY OPERATIONS, INC.	26/10/2007	KOLKATA
9	269354	2116/KOLNP/2010	31/12/2008	31/12/2007	HIGHLY PURE AMPHIPHILIC COPOLYMER COMPRISING HYDROPHOBIC BLOCK FROM ALPHA-HYDROXY ACID AND PROCESS FOR THE PREPARATION THEREOF	SAMYANG BIOPHARMACEUTICALS CORPORATION	25/11/2011	KOLKATA
10	269360	2945/KOLNP/2009	22/01/2008	22/01/2007	NUCLEAR RECEPTOR BINDING AGENTS	GTX, INC.	06/11/2009	KOLKATA
11	269361	2906/KOLNP/2008	24/11/2006	21/12/2005	SIZING OF PAPER	KEMIRA OYJ	06/02/2009	KOLKATA

CONTINUED TO PART- 2

CONTINUED FROM PART- 1

INTRODUCTION

In view of the recent amendment made in the Designs (Amendment) Rules, 2008 with effect from 17/06/2008, Publication of the matter relating to Designs is being published in the Official Journal of The Patent Office. This Journal is being published on weekly basis on every Friday covering the various proceedings on Designs as required according to the provisions of under Rule 22, 25, 27 and 39 of the Design (Amendment) Rules, 2008. All the enquiries on this Official Journal and other information as required by the public should be addressed to the Controller General of Patents, Designs & Trade Marks. Suggestions and comments are requested from all quarters so that the content can be enriched.

DESIGN
CORRIGENDUM

The Registered Design No. 266852 which has been erroneously published in the official Journal of India dated 17/07/2015, part –I , at page 45513, column 1 in the name of COVIDIEN LP, A LEGAL ENTITY OF THE STATE OF DELAWARE, 15 HAMPSHIRE STREET, MANSFIELD MA02048, UNITED STATES OF AMERICA Class 14-03, Date of Registration 21/10/2014, Titled as SENSOR CONNECTOR, Priority Number 29/488,944 Date 24/04/2014, Country USA should read as COVIDIEN LP, A LEGAL ENTITY OF THE STATE OF DELAWARE, 15 HAMPSHIRE STREET, MANSFIELD MA02048, UNITED STATES OF AMERICA Class 14-02, Date of Registration 21/10/2014, Titled as SENSOR CONNECTOR, Priority Number 29/488,944 Date 24/04/2014, Country USA

CANCELLATION PROCEEDINGS
under Section 19 (1) of the Designs Act, 2000 &
Designs (Amendment) Rules, 2008

(01)

"**Carlsberg Breweries A/S** , a corporation organized and existing under the laws of Denmark with its address at NY Carlsberg VEJ 100, 1799 Copenhagen V, Denmark has filed a petition on 7/10/2015 **(Petition No. Can/044/2015)** for cancellation of registration of registered Design No. **267817** dated 28/11/2014 under Class 09-01 titled as "Bottle" in the name of **Som Distilleries & Breweries Limited**, of 23, Zone II, Maharana Pratap Nagar, Bhopal – 462011, Madhya Predesh."

(02)

"Vinod Kanji Shah, Harshit Vinod Shah and Nishit Vinod Shah, all Indian national partners of **M/s. Ratan Polyplast,** a partnership firm, having principal place of business at A001, Kanakia, 215 Atrium, Next to Courtyard Marriott, Andheri Kurla Road, J.B. Nagar, Andheri (East), Mumbai 400093 have filed a petition on 5/10/2015 **(Petition No. Can/045/2015)** for cancellation of registration of registered Design No. **265486** dated 8/9/2014 under Class 09-04 titled as "Basket" in the name of **Bharat Cottage Industries**, a registered partnership firm at 1st Floor, Vakil Industrial Estate,Walbhat Road, Goregaon (E), Mumbai – 400063, Maharashtra, India, whose partners are 1. Priyank M Jain, 2. Mahendra M. Jain and 3. Mrs. Madhubala M Jain, all Indian nationals."

COPYRIGHT PUBLICATION

SL NO	REGISTERED DESIGN NUMBERS	RENEWED ON
1.	235235	13.10.2015
2.	224623	13.10.2015
3.	224621	13.10.2015
4.	224228	13.10.2015
5.	202800	13.10.2015
6.	202360	13.10.2015
7.	202590	24.08.2015
8.	202591	24.08.2015
9.	202592	24.08.2015
10.	202593	24.08.2015
11.	202594	24.08.2015

REGISTRATION OF DESIGNS

The following designs have been registered. They are now open for public inspection. In the following each entry the Date of Registration is shown. The Priority Number, Priority Date and Priority Country are also shown

DESIGN NUMBER	268764
CLASS	06-04
1)JOYFUL PLASTICS PRIVATE LIMITED, A COMPANY REGISTERED IN INDIA, HAVING ITS REGISTERED OFFICE AT 20, A/F, NEW EMPIRE INDUSTRIAL ESTATE, KONDIVITA ROAD, J.B.NAGAR, ANDHERI(E), MUMBAI-400059 STATE OF MAHARASHTRA, INDIA, OF ABOVE ADDRESS	
DATE OF REGISTRATION	09/01/2015
TITLE	SHELVES
PRIORITY NA	

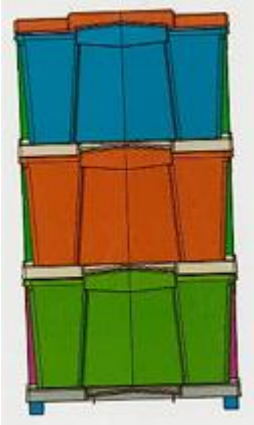

DESIGN NUMBER	269311
CLASS	10-04
1)M/S. ACTUS LABS PVT. LTD. (AN INDIAN COMPANY), NEW NO. 28, OLD NO. 22, ARCOT STREET, T. NAGAR, CHENNAI-600017, TAMIL NADU, INDIA	
DATE OF REGISTRATION	05/02/2015
TITLE	MEASURING CUP
PRIORITY NA	

DESIGN NUMBER	270268
CLASS	23-04
1)GROUPE SEB INDIA PRIVATE LIMITED, A-25, FIRST FLOOR, MOHAN CO-OPERATIVE INDUSTRIAL AREA, NEW DELHI-110044, DELHI, INDIA	
DATE OF REGISTRATION	11/03/2015
TITLE	AIR COOLER
PRIORITY NA	

DESIGN NUMBER	267842
CLASS	13-03

1)HAVELLS INDIA LIMITED, AN INDIAN NATIONAL COMPANY, HAVING REGISTERED OFFICE AT
1, RAJ NARAIN MARG, CIVIL LINES, DELHI 110054

DATE OF REGISTRATION	01/12/2014
TITLE	FUSE TERMINAL

PRIORITY NA

DESIGN NUMBER	270271
CLASS	06-01

1)GIUSEPPE DINUNZIO VIA ARTURO TOSCANINI 92 - 46019 VIADANA (MANTOVA) ITALY A CITIZEN OF ITALY, DEBORAH PEZZI VIA PICCININI 20 - 46019 VIADANA (MANTOVA) ITALY A CITIZEN OF ITALY AND
FRANCESCO PEZZI, VIA GIOSUÉ CARDUCCI 73 I.2 - 46019 VIADANA (MANTOVA) ITALY A CITIZEN OF ITALY

DATE OF REGISTRATION	11/03/2015
TITLE	CHAIR

PRIORITY

PRIORITY NUMBER	DATE	COUNTRY
002536169-0002	11/09/2014	OHIM

DESIGN NUMBER	269062
CLASS	24-01

1)COVIDIEN LP, A COMPANY ORGANIZED AND EXISTING UNDER THE LAWS OF UNITED STATES OF AMERICA, HAVING PLACE OF BUSINESS AT
15 HAMPSHIRE STREET, MANSFIELD MA 02048, UNITED STATES OF AMERICA

DATE OF REGISTRATION	23/01/2015
TITLE	GENERATOR FOR MEDICAL TREATMENT DEVICES

PRIORITY

PRIORITY NUMBER	DATE	COUNTRY
29/497,548	25/07/2014	U.S.A.

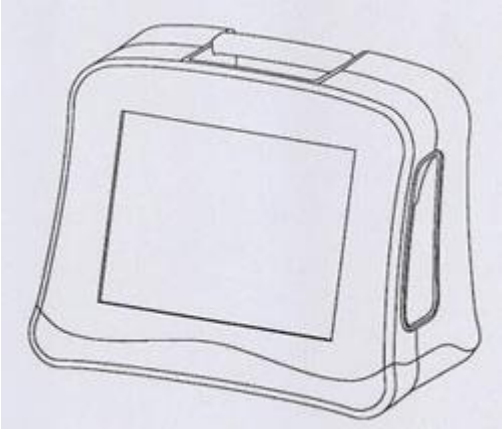

DESIGN NUMBER	272531
CLASS	19-06

1)ROLEX WRITING INSTRUMENTS, (A PARTNERSHIP FIRM REGISTERED UNDER INDIAN PARTNERSHIP ACT, 1932),
AT PLOT NO. L 720/2, GIDC SARIGAM TA. UMARGAON, DIST-VALSAD (GUJARAT), PINCODE-396155. WHOSE PARTNERS ARE (1) MADAN NENKATREDDY CHAVAKULA (INDIAN NATIONAL), (2) SHAILESH HIRJI VEERA (INDIAN NATIONAL), (3) KIRAN ANIL NAGDA (INDIAN NATIONAL) & (4) ABHAY RAMESH SHAH (INDIAN NATIONAL) ALL ARE HAVING ABOVE ADDRESS

DATE OF REGISTRATION	04/06/2015
TITLE	BALL PEN

PRIORITY NA

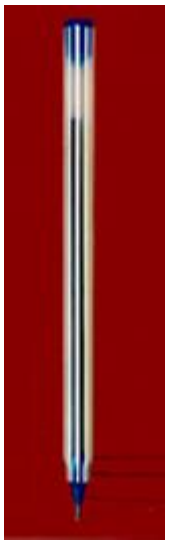

DESIGN NUMBER	269326
CLASS	24-02

1)BECTON, DICKINSON AND COMPANY, A COMPANY INCORPORATED UNDER THE LAWS OF THE UNITED STATES OF AMERICA HAVING ITS REGISTERED OFFICE AT
1 BECTON DRIVE, FRANKLIN LAKES, NEW JERSEY 07417, UNITED STATES OF AMERICA

DATE OF REGISTRATION	05/02/2015
TITLE	SAMPLE TUBE HOLDER

PRIORITY

PRIORITY NUMBER	DATE	COUNTRY
29/498782	07/08/2014	U.S.A.

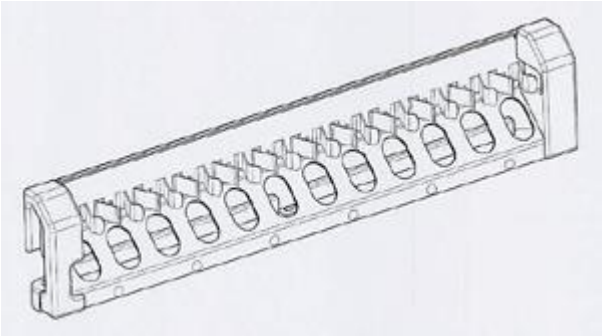

DESIGN NUMBER	268852
CLASS	12-16

1)ICON AIRCRAFT, INC., INCORPORATED IN THE STATE OF DELAWARE, USA, OF
12511 BEATRICE STREET, LOS ANGELES, CA 90066, UNITED STATES OF AMERICA

DATE OF REGISTRATION	14/01/2015
TITLE	AIRCRAFT STICK GRIP

PRIORITY

PRIORITY NUMBER	DATE	COUNTRY
29/496,689	16/07/2014	U.S.A.

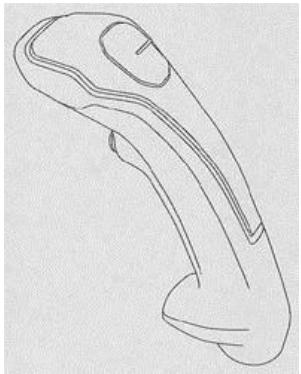

DESIGN NUMBER	267929
CLASS	04-04
1)ANURAG SANGHI, SOLE PROPRIETOR OF M/S. SANGHI BRUSHWARES, M-281, SETOR-1, BAWANA INDUSTRIAL AREA, BAWANA, DELHI-110039	
DATE OF REGISTRATION	05/12/2014
TITLE	PAINTBRUSH
PRIORITY NA	

DESIGN NUMBER	269079
CLASS	12-15
1)TVS SRICHAKRA LIMITED, AN INDIAN COMPANY, 7B, WEST VELI STREET, MADURAI 625001, TAMIL NADU, INDIA	
DATE OF REGISTRATION	27/01/2015
TITLE	TYRE
PRIORITY NA	

DESIGN NUMBER	271310
CLASS	29-02
1)GIRGLA INTERNATIONAL, AN INDIAN PROPRIETORSHIP FIRM, WHOSE PROPRIETOR IS BHUPENDER KUMAR AN INDIAN NATIONAL HAVING ITS ADDRESS AT 103-B, RAJENDRA PARK, MAIN ROHTAK ROAD, NANGLOI, NEW DELHI-110041, INDIA	
DATE OF REGISTRATION	10/04/2015
TITLE	SAFETY BELT BUCKLE SET
PRIORITY NA	

DESIGN NUMBER	268797
CLASS	09-03

1)THE GILLETTE COMPANY, A COMPANY INCORPORATED UNDER THE LAWS OF UNITED STATES OF AMERICA HAVING ITS OFFICE AT
IP/LEGAL PATENT DEPARTMENT - 3E, ONE GILLETTE PARK, BOSTON, MASSACHUSETTS 02127, UNITED STATES OF AMERICA

DATE OF REGISTRATION	12/01/2015
TITLE	CONTAINER

PRIORITY

PRIORITY NUMBER	DATE	COUNTRY
29/496617	15/07/2014	U.S.A.

DESIGN NUMBER	268869
CLASS	09-05

1)CADILA HEALTHCARE LIMITED, AN INDIAN COMPANY INCORPORATED UNDER THE COMPANIES ACT, 1956, OF
SARKHEJ-BAVLA, N.H. NO. 08A, MORAIYA, TAL. SANAD, AHMEDABAD-382210, INDIA

DATE OF REGISTRATION	14/01/2015
TITLE	BLISTER PACK

PRIORITY NA

DESIGN NUMBER	269082
CLASS	07-99

1)WHIRLPOOL S.A., A BRAZILIAN COMPANY, OF
AVENIDA DAS NAÇÕES UNIDAS, 12.995 - 32º ANDAR, BROOKLIN NOVO-04578-000-SÃO PAULO - SP - BRAZIL

DATE OF REGISTRATION	28/01/2015
TITLE	STAND FOR CONTAINER

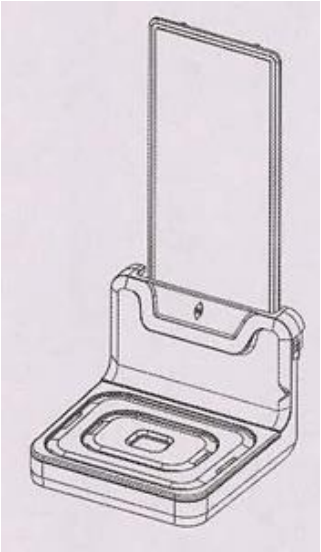

PRIORITY

PRIORITY NUMBER	DATE	COUNTRY
BR 30 2014 003476 6	28/07/2014	BRAZIL

DESIGN NUMBER	271876
CLASS	12-11
1)TUBE INVESTMENTS OF INDIA LIMITED, AN INDIAN COMPANY INCORPORATED UNDER THE COMPANIES ACT OF 1956, HAVING ITS PRINCIPAL PLACE OF BUSINESS AT "DARE HOUSE", 234, N. S. C. BOSE ROAD, CHENNAI - 600001, STATE OF TAMIL NADU, INDIA	
DATE OF REGISTRATION	05/05/2015
TITLE	SAREEGUARD FOR BICYCLE
PRIORITY NA	

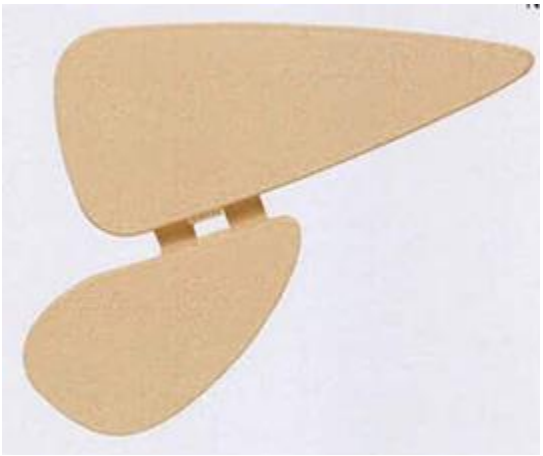

DESIGN NUMBER	268870
CLASS	09-05
1)CADILA HEALTHCARE LIMITED, AN INDIAN COMPANY INCORPORATED UNDER THE COMPANIES ACT, 1956, OF SARKHEJ-BAVLA, N.H. NO. 08A, MORAIYA, TAL. SANAD, AHMEDABAD-382210, INDIA	
DATE OF REGISTRATION	14/01/2015
TITLE	BLISTER PACK
PRIORITY NA	

DESIGN NUMBER	272048
CLASS	28-03
1)(1) MANOJKUMAR CHANDULAL RANPARA (2) TUSHARBHAI MANOJKUMAR RANPARA (3) DEVANGBHAI MANOJKUMAR RANPARA (ALL THE PARTNERS ARE ADULT AND INDIAN NATIONALS) PARTNER OF NEW RANPARA INDUSTRIES (INDIAN PARTNERSHIP FIRM) HAVING PLACE OF BUSINESS AT- PANCHASAR ROAD, B/H. GEETA OIL MILL, MORBI-363641 DISTRICT-RAJKOT-GUJARAT (INDIA)	
DATE OF REGISTRATION	12/05/2015
TITLE	TONGUE CLEANER
PRIORITY NA	

DESIGN NUMBER	267841
CLASS	13-03
1)HAVELLS INDIA LIMITED, AN INDIAN NATIONAL COMPANY, HAVING REGISTERED OFFICE AT 1, RAJ NARAIN MARG, CIVIL LINES, DELHI 110054	
DATE OF REGISTRATION	01/12/2014
TITLE	FUSE TERMINAL
PRIORITY NA	

DESIGN NUMBER	269313
CLASS	28-03
1)WAHL CLIPPER CORPORATION, A COMPANY OF USA OF 2900 NORTH LOCUST STREET, STERLING, ILLINOIS 61081-0578, USA	
DATE OF REGISTRATION	05/02/2015
TITLE	HAIR CUTTING DEVICE HOUSING

PRIORITY

PRIORITY NUMBER	DATE	COUNTRY
29/498,886	08/08/2014	U.S.A.

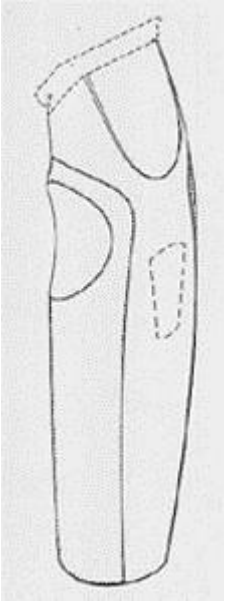

DESIGN NUMBER	270269
CLASS	23-04
1)GROUPE SEB INDIA PRIVATE LIMITED, A-25, FIRST FLOOR, MOHAN CO-OPERATIVE INDUSTRIAL AREA, NEW DELHI-110044, DELHI, INDIA	
DATE OF REGISTRATION	11/03/2015
TITLE	AIR COOLER
PRIORITY NA	

DESIGN NUMBER	269105
CLASS	13-03
1)MR. KAPIL JAIN AN INDIVIDUAL - INDIAN RESIDENT OF A-302, VASTU PARK, EVERSHINE NAGAR, MALAD (WEST), MUMBAI-400064	
DATE OF REGISTRATION	28/01/2015
TITLE	SWITCH COVER PLATE
PRIORITY NA	

DESIGN NUMBER	267498
CLASS	23-04
1)RAJINDER KUMAR PROP. OF ADVANCE REFRIGERATION & WATER TECHNOLOGY SHOP NO. 8 MAIN MARKET, DEEP NAGAR, GURUDWARA SINGH SABHA, LUDHIANA (PB.) INDIA, AN INDIAN NATIONAL	
DATE OF REGISTRATION	18/11/2014
TITLE	AIR CONDITIONER
PRIORITY NA	

DESIGN NUMBER	268913
CLASS	10-04
1)PRASANT RANJAN VERMA, INDIAN, OF THE ADDRESS, C36, NEW TOWNSHIP, NTPC BADARPUR, NEW DELHI-110044, INDIA	
DATE OF REGISTRATION	16/01/2015
TITLE	RUPEE CHECKER FOR VISUALLY IMPAIRED
PRIORITY NA	

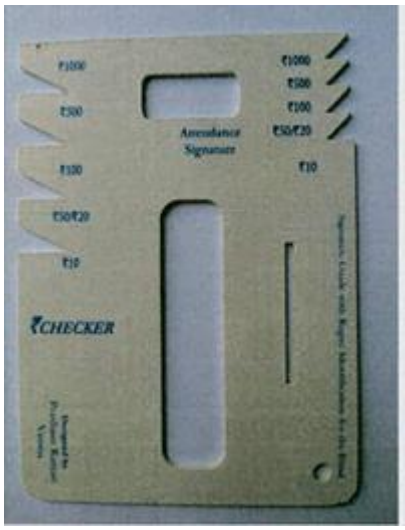

DESIGN NUMBER	269878
CLASS	12-16
1)TATA MOTORS LIMITED, AN INDIAN COMPANY OF BOMBAY HOUSE, 24 HOMI MODY STREET, HUTATMA CHOWK, MUMBAI 400001, MAHARASHTRA, INDIA	
DATE OF REGISTRATION	26/02/2015
TITLE	FENDER VENT OF A VEHICLE
PRIORITY NA	

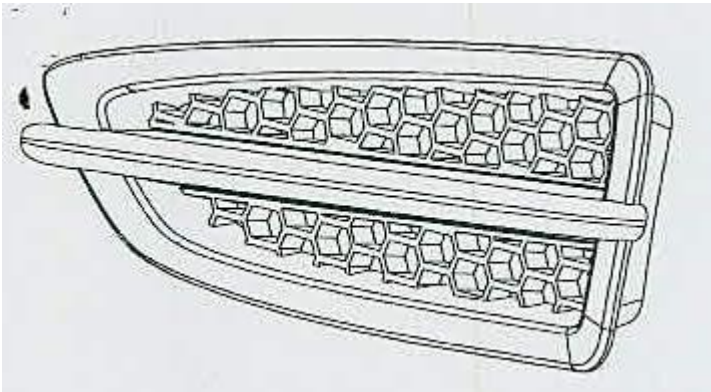

DESIGN NUMBER	271006
CLASS	12-11
1)TUBE INVESTMENTS OF INDIA LIMITED, AN INDIAN COMPANY INCORPORATED UNDER THE COMPANIES ACT OF 1956, HAVING ITS PRINCIPAL PLACE OF BUSINESS AT "DARE HOUSE", 234, N. S. C. BOSE ROAD, CHENNAI - 600001, STATE OF TAMIL NADU, INDIA	
DATE OF REGISTRATION	06/04/2015
TITLE	FRAME FOR BICYCLE
PRIORITY NA	

DESIGN NUMBER	271058
CLASS	15-06
1)MYLSAMY RANGA RAMANUJAM, AN INDIAN NATIONAL, WHOSE ADDRESS IS COATS NO: 13/24, SITRA KALAPATTI ROAD, CIVIL AERODROME POST, COIMBATORE-641014, TAMILNADU, INDIA	
DATE OF REGISTRATION	06/04/2015
TITLE	A BOBBIN HOLDER
PRIORITY NA	

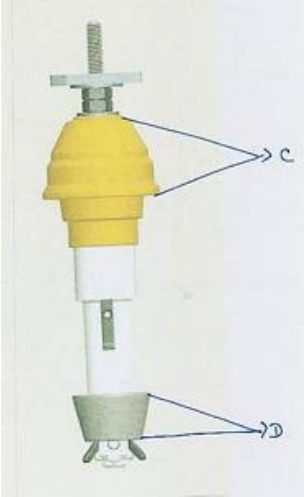

DESIGN NUMBER	271218
CLASS	21-01
1)VARUN JAIN (INDIVIDUAL), C-3/22, RAJASTHALI APARTMENTS, MADHUBAN CHOWK, PITAM PURA, DELHI-110034, AN INDIAN NATIONAL	
DATE OF REGISTRATION	08/04/2015
TITLE	TOY CAR
PRIORITY NA	

DESIGN NUMBER	268212
CLASS	08-06
1)(1) RAJNIKANT MANSUKHBHAI DUDHATRA (2) KALPESHBHAI MANSUKHBHAI DUDHATRA (BOTH THE PARTNERS ARE ADULT & INDIAN NATIONAL) PARTNERS OF JAY BALAJI INDUSTRIES (INDIAN PARTNERSHIP FIRM) HAVING PLACE OF BUSINESS AT- SHIVAM INDUSTRIAL AREA, B/H. PETROL PUMP, KOTHARIYA RING ROAD, RAJKOT-360002-GUJARAT-(INDIA)	
DATE OF REGISTRATION	15/12/2014
TITLE	HANDLE
PRIORITY NA	

DESIGN NUMBER	269881
CLASS	12-16
1)TATA MOTORS LIMITED, AN INDIAN COMPANY OF BOMBAY HOUSE, 24 HOMI MODY STREET, HUTATMA CHOWK, MUMBAI 400001, MAHARASHTRA, INDIA	
DATE OF REGISTRATION	26/02/2015
TITLE	REAR BUMPER PF A VEHICLE
PRIORITY NA	

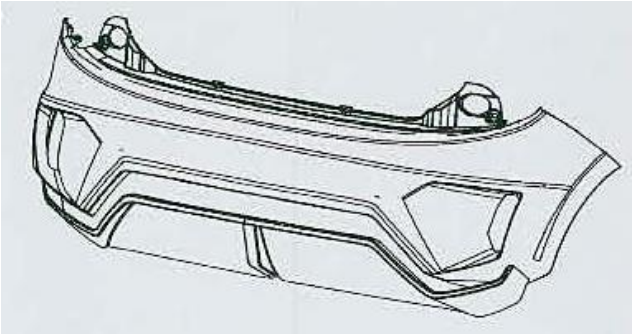

DESIGN NUMBER	268492
CLASS	15-05
1)OY HALTON GROUP LTD., ESTERINPORTTI 2, HELSINKI 02240, FINLAND, NATIONALITY: FINLAND	
DATE OF REGISTRATION	30/12/2014
TITLE	EXHAUST HOOD

PRIORITY

PRIORITY NUMBER	DATE	COUNTRY
29/496,341	11/07/2014	U.S.A.

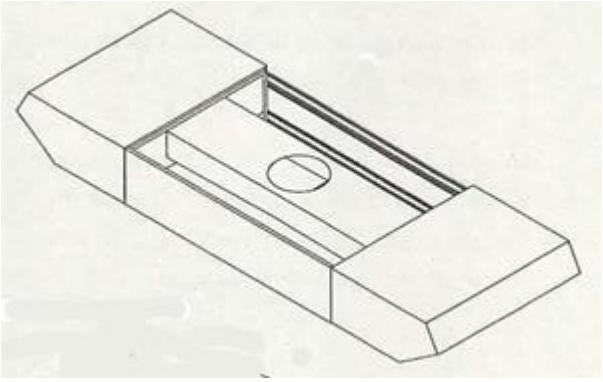

DESIGN NUMBER	268851
CLASS	26-06
1)ICON AIRCRAFT, INC., INCORPORATED IN THE STATE OF DELAWARE, USA, OF 12511 BEATRICE STREET, LOS ANGELES, CA 90066, UNITED STATES OF AMERICA	
DATE OF REGISTRATION	14/01/2015
TITLE	AIRCRAFT HEADLIGHT LENS

PRIORITY

PRIORITY NUMBER	DATE	COUNTRY
29/496,950	18/07/2014	U.S.A.

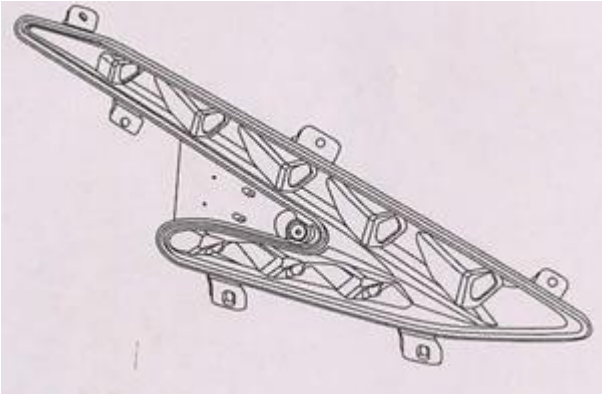

DESIGN NUMBER	270381
CLASS	09-01
1)MUKESH KHANNA, SOLE PROPRIETOR OF PINAAZ PERSONAL CARE WHOSE ADDRESS IS PLOT NO. 45, POCKET H, SECTOR-5, BAWANA INDUSTRIAL AREA, DELHI-110039, INDIA AN INDIAN NATIONAL OF ABOVE ADDRESS	
DATE OF REGISTRATION	16/03/2015
TITLE	BOTTLE

PRIORITY NA

DESIGN NUMBER	271297
CLASS	06-11
1)RAJEEV MANUJA, AN INDIAN NATIONAL RESIDING AT 81, SAINIK VIHAR, PITAMPURA, NEW DELHI-110034, INDIA	
DATE OF REGISTRATION	10/04/2015
TITLE	FOOT MAT FOR AUTOMOBILES
PRIORITY NA	

DESIGN NUMBER	268872
CLASS	09-05
1)CADILA HEALTHCARE LIMITED, AN INDIAN COMPANY INCORPORATED UNDER THE COMPANIES ACT, 1956, OF SARKHEJ-BAVLA, N.H. NO. 08A, MORAIYA, TAL. SANAD, AHMEDABAD-382210, INDIA	
DATE OF REGISTRATION	14/01/2015
TITLE	BLISTER PACK
PRIORITY NA	

DESIGN NUMBER	269100
CLASS	13-03
1)MR. KAPIL JAIN AN INDIVIDUAL - INDIAN RESIDENT OF A-302, VASTU PARK, EVERSHINE NAGAR, MALAD (WEST), MUMBAI-400064	
DATE OF REGISTRATION	28/01/2015
TITLE	SWITCH COVER PLATE
PRIORITY NA	

DESIGN NUMBER	267294
CLASS	23-04
1)CROMPTON GREAVES LIMITED, CG HOUSE, 6TH FLOOR, DR. ANNIE BESANT ROAD, WORLI, MUMBAI - 400030, MAHARASHTRA, INDIA; AN INDIAN COMPANY	
DATE OF REGISTRATION	10/11/2014
TITLE	FAN
PRIORITY NA	

DESIGN NUMBER	268278
CLASS	13-99
1)TATA POWER SOLAR SYSTEMS LIMITED, AN INDIAN COMPANY OF 78, ELECTRONIC CITY, HOSUR ROAD, BANGALORE 560100, KARNATAKA, INDIA	
DATE OF REGISTRATION	18/12/2014
TITLE	BRACKET FOR FORMING SOLAR PANEL MOUNTING FRAME
PRIORITY NA	

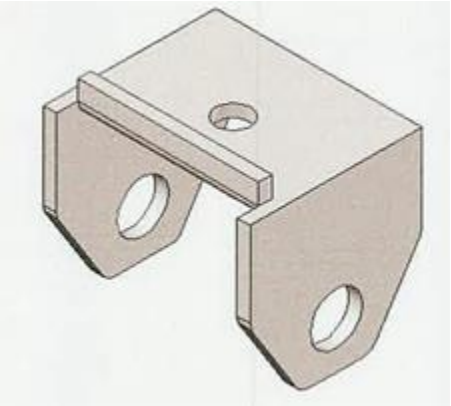

DESIGN NUMBER	269422
CLASS	09-01
1)UNILEVER PLC, A COMPANY REGISTERED IN ENGLAND AND WALES UNDER COMPANY NO. 41424 OF UNILEVER HOUSE, 100 VICTORIA EMBANKMENT, LONDON, EC4Y 0DY, UNITED KINGDOM	
DATE OF REGISTRATION	09/02/2015
TITLE	DISPENSER REFILL

PRIORITY

PRIORITY NUMBER	DATE	COUNTRY
29/500611	27/08/2014	U.S.A.

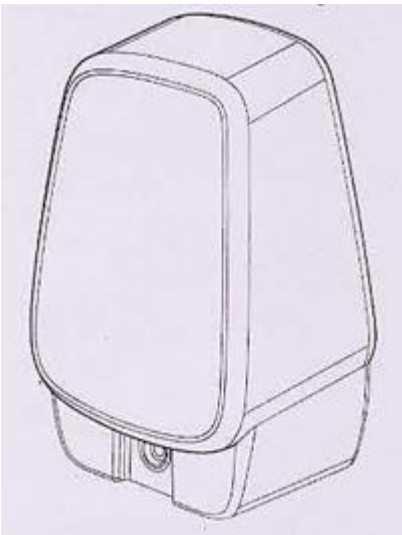

DESIGN NUMBER	270029
CLASS	05-05
1)M/S BOOK MY WISH E-COMMERCE PVT. LTD. WHOSE ADDRESS IS- BASEMENT, MIHIR TOWER, OPP. HIRABHAI TOWER, JAWAHAR CHOWK, MANINAGAR, AHMEDABAD-380008, GUJARAT, INDIA	
DATE OF REGISTRATION	02/03/2015
TITLE	TEXTILE FABRIC
PRIORITY NA	

DESIGN NUMBER	268967
CLASS	12-15
1)M/S GOVIND RUBBER LIMITED AN INDIAN COMPANY DULY INCORPORATED UNDER THE COMPANIES ACT, 1956 OF 418, CREATIVE INDUSTRIAL ESTATE, SITARAM MILLS COMPOUND, N.M. JOSHI MARG, LOWER PAREL, MUMBAI-400011, MAHARASHTRA, INDIA	
DATE OF REGISTRATION	20/01/2015
TITLE	TYRE
PRIORITY NA	

DESIGN NUMBER	270664
CLASS	15-09
1)TATA STEEL LIMITED, RESEARCH AND DEVELOPMENT DIVISION, JAMSHEDPUR 831 001, INDIA, AN INDIAN COMPANY	
DATE OF REGISTRATION	27/03/2015
TITLE	INSER FOR USE IN GLEEBLE EQUIPMENT
PRIORITY NA	

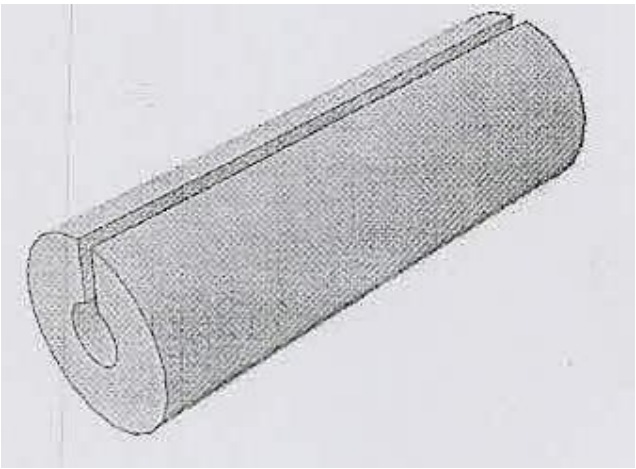

DESIGN NUMBER	268600
CLASS	14-03

1)DAIKIN INDUSTRIES LTD. A JAPANESE COMPANY OF THE
ADDRESS:
UMEDA CENTER BUILDING, 4-12 NAKAZAKI-NISHI 2-CHOME, KITA-KU, OSAKA-SHI, OSAKA-FU, JAPAN

DATE OF REGISTRATION	01/01/2015
TITLE	REMOTE CONTROLLER FOR AIR CONDITIONER

PRIORITY

PRIORITY NUMBER	DATE	COUNTRY
2014-015284	14/07/2014	JAPAN

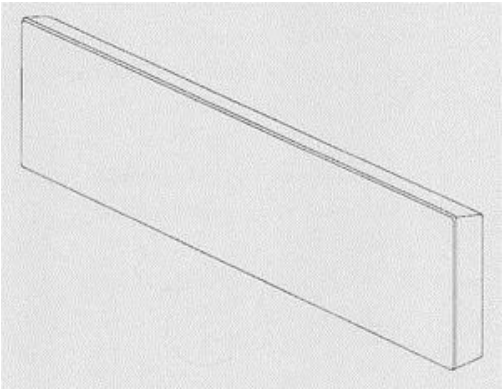

DESIGN NUMBER	267317
CLASS	08-06

1)SANVI ENTERPRISE, AN INDIAN ENTITY HAVING ITS PRINCIPAL PLACE OF BUSINESS AT
NATIONAL HIGHWAY 8-B, OPPOSITE PARIN FURNITURE, KOTHARIYA SOLVENT AREA, NEAR DHOKIYA MOTORS, KOTHARIYA, DIST: RAJKOT-360004, GUJARAT, INDIA

DATE OF REGISTRATION	11/11/2014
TITLE	CABINET HANDLE

PRIORITY NA

DESIGN NUMBER	268281
CLASS	13-99

1)TATA POWER SOLAR SYSTEMS LIMITED, AN INDIAN COMPANY OF
78, ELECTRONIC CITY, HOSUR ROAD, BANGALORE 560100, KARNATAKA, INDIA

DATE OF REGISTRATION	18/12/2014
TITLE	BRACKET FOR FORMING SOLAR PANEL MOUNTING FRAME

PRIORITY NA

DESIGN NUMBER	268980
CLASS	24-01
1)MR. SACHIN G. LOKAPURE (INDIA). A THE PROPRIETOR OF SAGLO® RESEARCH EQUIPMENT HAVING ITS PRINCIPAL PLACE OF BUSINESS 5099, NEAR ASHA TALKIES, OPP. OMKAR APARTMENT, SHANIWAR PETH, MIRAJ-416410, DIST-SANGLI, MAHARASHTRA, INDIA.	
DATE OF REGISTRATION	21/01/2015
TITLE	BODY PANEL SUB-ASSEMBLY FOR DIGITAL MICRO-IMAGING ADAPTOR
PRIORITY NA	

DESIGN NUMBER	271573
CLASS	02-04
1)M/S. AEROBOK SHOE PVT. LTD., 1459, M.I.E., PART-II, BAHADURGARH-124507 [HARYANA], INDIA [AN INDIAN PRIVATE LIMITED COMPANY]	
DATE OF REGISTRATION	21/04/2015
TITLE	FOOTWEAR
PRIORITY NA	

DESIGN NUMBER	269929
CLASS	12-16
1)TATA MOTORS LIMITED, AN INDIAN COMPANY OF BOMBAY HOUSE, 24 HOMI MODY STREET, HUTATMA CHOWK, MUMBAI 400001, MAHARASHTRA, INDIA	
DATE OF REGISTRATION	27/02/2015
TITLE	WHEEL OF A VEHICLE
PRIORITY NA	

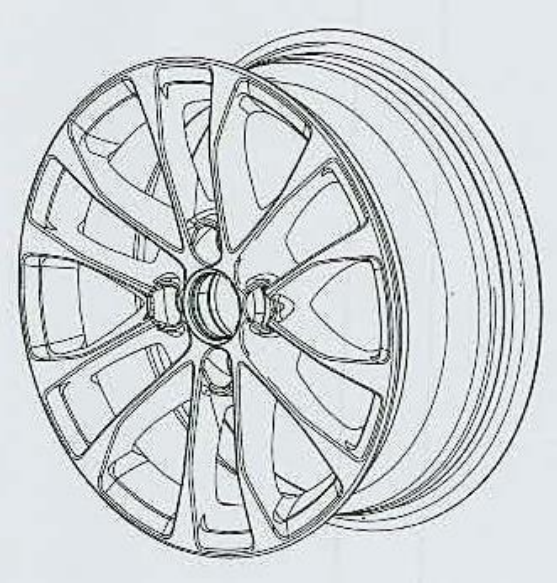

DESIGN NUMBER	267675
CLASS	11-01
1)RISHI VERMA; AN INDIAN NATIONAL WHOSE ADDRESS IS 6352/2, ALEXANDRA ROAD, AMBALA CANTT-133001, HARYANA, INDIA	
DATE OF REGISTRATION	25/11/2014
TITLE	JEWELLERY
PRIORITY NA	

DESIGN NUMBER	268611
CLASS	04-02
1)COLGATE-PALMOLIVE COMPANY, A DELAWARE CORPORATION, 300 PARK AVENUE, NEW YORK, NEW YORK 10022, USA & OMRON HEALTHCARE CO., LTD., A JAPANESE CORPORATION, 53, KUNOTSUBO, TERADO-CHO, MUKO-SHI, KYOTO, 617-0002, JAPAN	
DATE OF REGISTRATION	02/01/2015
TITLE	ELECTRIC TOOTHBRUSH WITH CAP

PRIORITY

PRIORITY NUMBER	DATE	COUNTRY
29/497,639	25/07/2014	U.S.A.

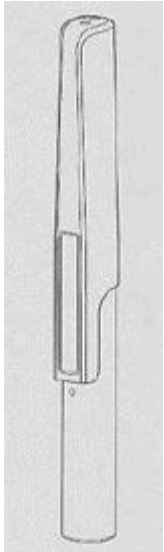

DESIGN NUMBER	267318
CLASS	08-06
1)SANVI ENTERPRISE, AN INDIAN ENTITY HAVING ITS PRINCIPAL PLACE OF BUSINESS AT NATIONAL HIGHWAY 8-B, OPPOSITE PARIN FURNITURE, KOTHARIYA SOLVENT AREA, NEAR DHOKIYA MOTORS, KOTHARIYA, DIST: RAJKOT-360004, GUJARAT, INDIA	
DATE OF REGISTRATION	11/11/2014
TITLE	CABINET HANDLE
PRIORITY NA	

DESIGN NUMBER	268282
CLASS	13-99
1)TATA POWER SOLAR SYSTEMS LIMITED, AN INDIAN COMPANY OF 78, ELECTRONIC CITY, HOSUR ROAD, BANGALORE 560100, KARNATAKA, INDIA	
DATE OF REGISTRATION	18/12/2014
TITLE	BRACKET FOR FORMING SOLAR PANEL MOUNTING FRAME
PRIORITY NA	

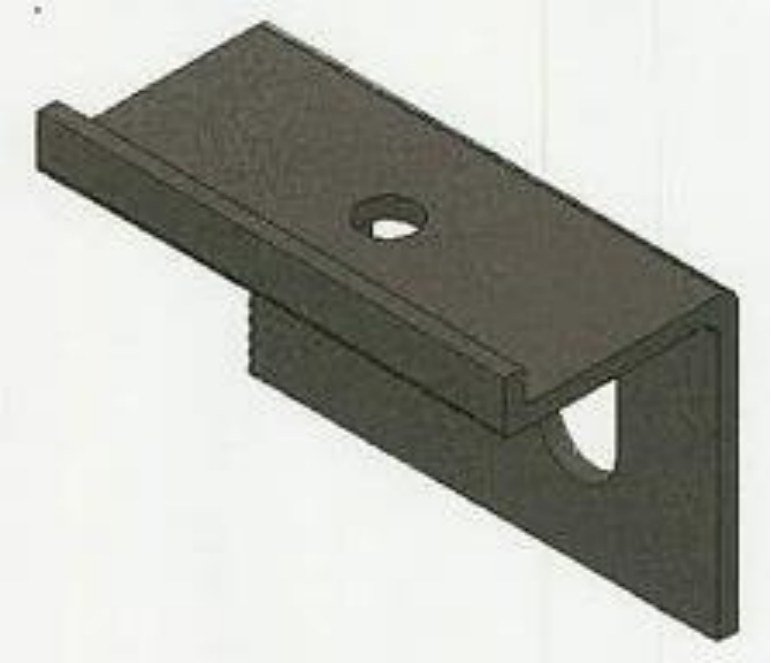

DESIGN NUMBER	269680
CLASS	12-11
1)MR. KUMAR NATARAJAN RESIDING AT #44, MAHADEVAN STREET, WEST MAMBALAM, CHENNAI-600033, TAMIL NADU, INDIA	
DATE OF REGISTRATION	19/02/2015
TITLE	CYCLE
PRIORITY NA	

DESIGN NUMBER	269932
CLASS	26-06
1)TATA MOTORS LIMITED, AN INDIAN COMPANY OF BOMBAY HOUSE, 24 HOMI MODY STREET, HUTATMA CHOWK, MUMBAI 400001, MAHARASHTRA, INDIA	
DATE OF REGISTRATION	27/02/2015
TITLE	HEADLAMP LENS OF A VEHICLE
PRIORITY NA	

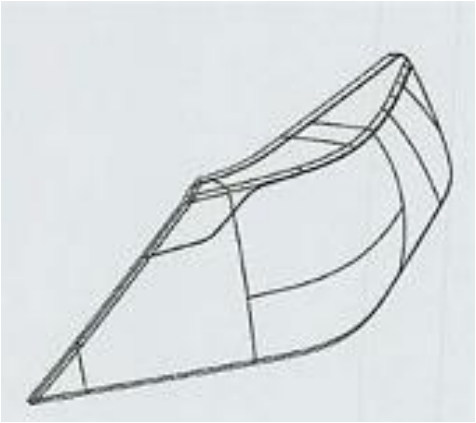

DESIGN NUMBER	267194
CLASS	07-04
1)SIDDHARTHA ENTERPRISES, A COMPANY REGISTERED UNDER THE COMPANIES ACT, 1956 HAVING ITS REGISTERED OFFICE AT # 37/3, GOWDANPALYA, SUBRAMANYAPURA MAIN ROAD, BANGALORE-560061, KARNATAKA, INDIA; NATIONALITY: INDIAN	
DATE OF REGISTRATION	03/11/2014
TITLE	VEGETABLE CUTTER
PRIORITY NA	

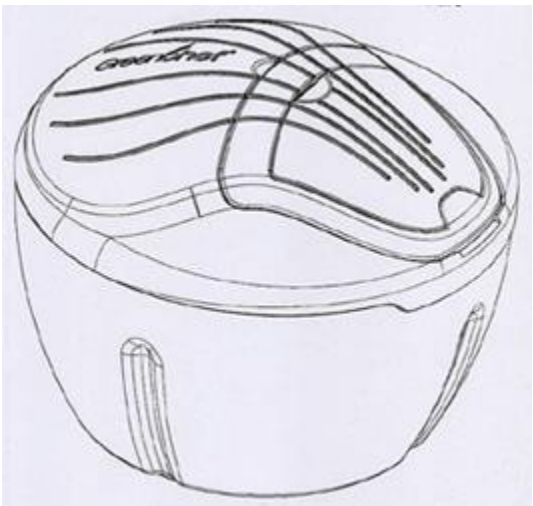

DESIGN NUMBER	227351
CLASS	08-07
1)SUNIL TRIKAMLAL PANCHAL SHREEJI INDUSTRIES, 23, MADHURAM COMPLEX, SUBHASHBRIDGE, AHMEDABAD-380027, GUJARAT, INDIA	
DATE OF REGISTRATION	22/02/2010
TITLE	SEAL
PRIORITY NA	

DESIGN NUMBER	268912
CLASS	03-01
1)PRASANT RANJAN VERMA, INDIAN, OF THE ADDRESS, C36, NEW TOWNSHIP, NTPC BADARPUR, NEW DELHI-110044, INDIA	
DATE OF REGISTRATION	16/01/2015
TITLE	WALLET
PRIORITY NA	

DESIGN NUMBER	269120
CLASS	13-03
1)MR. KAPIL JAIN AN INDIVIDUAL - INDIAN RESIDENT OF A-302, VASTU PARK, EVERSHINE NAGAR, MALAD (WEST), MUMBAI-400064	
DATE OF REGISTRATION	28/01/2015
TITLE	SWITCH COVER PLATE
PRIORITY NA	

DESIGN NUMBER	268669
CLASS	09-01
1)SHALIMAR CHEMICAL WORKS LIMITED, OF 92E, ALIPORE ROAD, KOLKATA - 700027, WEST BENGAL, INDIA, AN INDIAN PUBLIC LIMITED COMPANY	
DATE OF REGISTRATION	07/01/2015
TITLE	BOTTLE
PRIORITY NA	

DESIGN NUMBER	268114
CLASS	24-02
1)KONINKLIJKE PHILIPS N.V., A COMPANY ORGANIZED AND EXISTING UNDER THE LAWS OF THE KINGDOM OF THE NETHERLANDS, RESIDING AT EINDHOVEN, WHOSE POST-OFFICE ADDRESS IS HIGH TECH CAMPUS 5, 5656 AE EINDHOVEN, THE NETHERLANDS	
DATE OF REGISTRATION	10/12/2014
TITLE	FRAME FOR A PATIENT INTERFACE DEVICE

PRIORITY

PRIORITY NUMBER	DATE	COUNTRY
002485151-0003	18/06/2014	OHIM

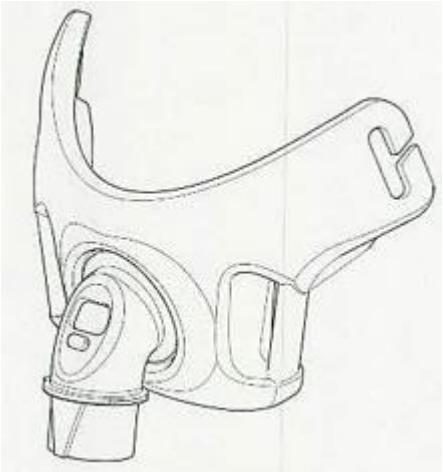

DESIGN NUMBER	267364
CLASS	15-04
1)MAHINDRA & MAHINDRA LIMITED, A COMPANY INCORPORATED UNDER THE COMPANIES ACT, 1956 WHOSE ADDRESS IS GATEWAY BUILDING, APOLLO BUNDER, MUMBAI 400001, MAHARASHTRA, INDIA	
DATE OF REGISTRATION	13/11/2014
TITLE	SIDE CUTTER FOR BACKHOE LOADER
PRIORITY NA	

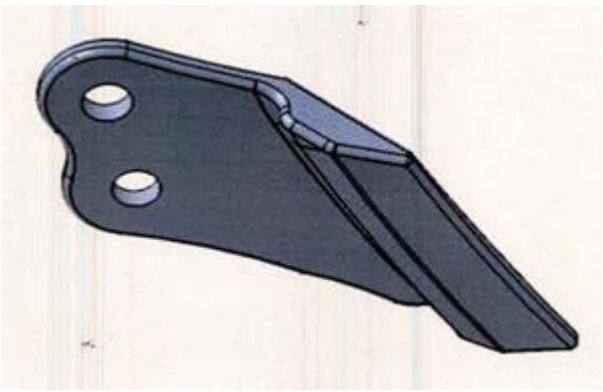

DESIGN NUMBER	268331
CLASS	13-03
1)YAZAKI CORPORATION, A JAPANESE CORPORATION OF 4-28, MITA 1-CHOME, MINATO-KU, TOKYO 108-0073, JAPAN	
DATE OF REGISTRATION	22/12/2014
TITLE	ELECTRICAL CONNECTOR HOUSING

PRIORITY

PRIORITY NUMBER	DATE	COUNTRY
2014-013999	26/06/2014	JAPAN

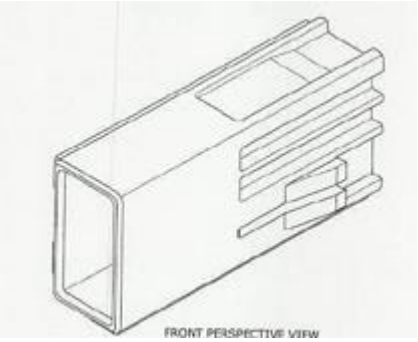

DESIGN NUMBER	270499
CLASS	12-16
1)AUDI AG, A JOINT STOCK COMPANY ESTABLISHED UNDER GERMAN LAW OF AUTO-UNION-STR. 1, D-85045 INGOLSTADT, GERMANY	
DATE OF REGISTRATION	23/03/2015
TITLE	WHEEL RIM FOR VEHICLES

PRIORITY

PRIORITY NUMBER	DATE	COUNTRY
002542191-0003	22/09/2014	OHIM

DESIGN NUMBER	271580
CLASS	02-04
1)M/S. AEROBOK SHOE PVT. LTD., 1459, M.I.E., PART-II, BAHADURGARH-124 507 [HARYANA], INDIA [AN INDIAN PRIVATE LIMITED COMPANY]	
DATE OF REGISTRATION	21/04/2015
TITLE	FOOTWEAR
PRIORITY NA	

DESIGN NUMBER	268112
CLASS	13-03
1)WÖHNER GMBH & CO. KG ELEKTROTECHNISCHE SYSTEME, A COMPANY EXISTING UNDER THE LAWS OF GERMANY, MÖNCHRÖDENER STR. 10, 86472 RÖDENTAL, GERMANY	
DATE OF REGISTRATION	10/12/2014
TITLE	FUSE SWITCH DISCONNECTION MODULE

PRIORITY

PRIORITY NUMBER	DATE	COUNTRY
002513424-0002	01/08/2014	EUROPEAN UNION

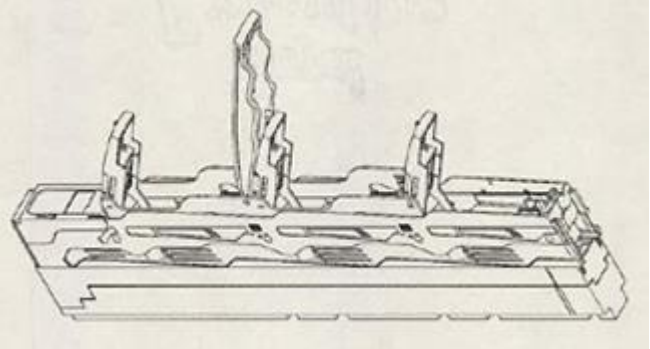

DESIGN NUMBER	267350
CLASS	14-01
1)ROBERT BOSCH GMBH, A GERMAN COMPANY OF POSTFACH 30 02 20, 70442 STUTTGART, GERMANY	
DATE OF REGISTRATION	12/11/2014
TITLE	EQUIPMENT FOR REPRODUCTION OF SOUNDS

PRIORITY

PRIORITY NUMBER	DATE	COUNTRY
002490250	25/06/2014	OHIM

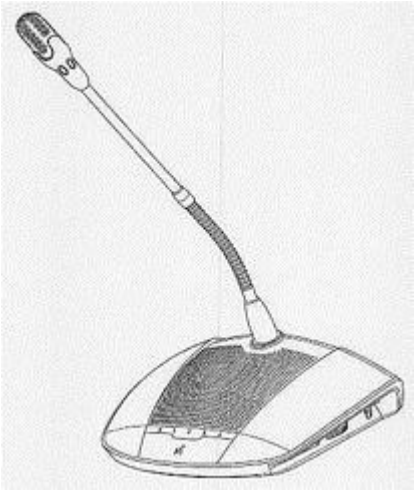

DESIGN NUMBER	268314
CLASS	27-99

1)PHILIP MORRIS PRODUCTS S.A. (THE ''APPLICANT''), HAVING ADDRESS AT
QUAI JEANRENAUD 3, CH-2000 NEUCHÂTEL, SWITZERLAND

DATE OF REGISTRATION	22/12/2014
TITLE	TOBACCO STICK FOR INSERTING IN A TOBACCO HEATING DEVICE

PRIORITY

PRIORITY NUMBER	DATE	COUNTRY
002490557-0003	25/06/2014	OHIM

DESIGN NUMBER	270247
CLASS	13-03

1)VIJAYA ENTERPRISES, AN INDIAN PARTNERSHIP FIRM, REPRESENTED BY ITS PARTNERS KUPPA DEVENDRAIYER NAGASAMY, KUPPA NAGASAMY UDAYAKUMAR AND KUPPA NAGASAMY SIVAKUMAR, AT
OLD NO. 18-B/1, NEW NO. 16, NEW RAMNAD ROAD, MADURAI-625009, TAMIL NADU

DATE OF REGISTRATION	10/03/2015
TITLE	JUNCTION BOX

PRIORITY NA

DESIGN NUMBER	270677
CLASS	05-05

1)CHAMUNDI TEXTILES (SILK MILLS) LTD., A COMPANY INCORPORATED UNDER THE INDIAN COMPANIES ACT, 1956, HAVING ITS BUSINESS AT
B 206, BRIGADE MAJESTIC, NO. 26, 1ST MAIN ROAD, GANDHI NAGAR, BANGALORE 560009

DATE OF REGISTRATION	27/03/2015
TITLE	TEXTILE FABRIC

PRIORITY NA

DESIGN NUMBER	271729
CLASS	07-01

1)RAHUL JOHAR (AN INDIAN NATIONAL) TRADING AS M/S JOHAR ENTERPRISES,
T-311, AHATA KIDARA, BEHIND FILMISTAN HALL, LAKSHMI NARAYAN MANDIR, DELHI-110006.

DATE OF REGISTRATION	27/04/2015
TITLE	WATER JUG

PRIORITY NA

DESIGN NUMBER	267198
CLASS	26-03

1)SCHREDER S.A. OF
RUE DE LUSAMBO, 67, B. 1190 BRUXELLES, BELGIUM, A BELGIUM COMPANY

DATE OF REGISTRATION	03/11/2014
TITLE	BRACKET FOR LIGHTING FIXTURE

PRIORITY

PRIORITY NUMBER	DATE	COUNTRY
002471375-0002	27/05/2014	OHIM

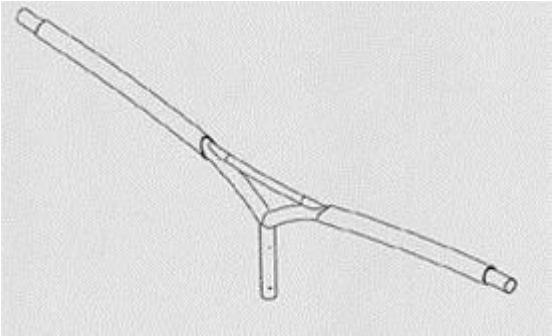

DESIGN NUMBER	268116
CLASS	24-02

1)KONINKLIJKE PHILIPS N.V., A COMPANY ORGANIZED AND EXISTING UNDER THE LAWS OF THE KINGDOM OF THE NETHERLANDS, RESIDING AT EINDHOVEN, WHOSE POST-OFFICE ADDRESS IS
HIGH TECH CAMPUS 5, 5656 AE EINDHOVEN, THE NETHERLANDS

DATE OF REGISTRATION	10/12/2014
TITLE	PATIENT INTERFACE DEVICE

PRIORITY

PRIORITY NUMBER	DATE	COUNTRY
002485151-0001	18/06/2014	OHIM

DESIGN NUMBER	268685
CLASS	12-05

1)MARTIN ENGINEERING COMPANY, A CORPORATION OF THE STATE OF ILLINOIS, OF
ONE MARTIN PLACE, NEPONSET, ILLINOIS 61345, UNITED STATES OF AMERICA

DATE OF REGISTRATION	07/01/2015
TITLE	BASE PORTION OF A CONVEYOR BELT SCRAPER BLADE

PRIORITY

PRIORITY NUMBER	DATE	COUNTRY
29/496,391	11/07/2014	U.S.A.

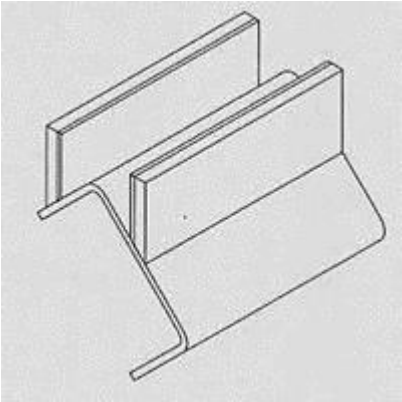

DESIGN NUMBER	267372
CLASS	14-03

1)LG ELECTRONICS INC. 128 YEOUI-DAERO, YEONGDEUNGPO - GU, SEOUL 150 - 721, REPUBLIC OF KOREA
A CORPORATION INCORPORATED UNDER THE LAWS OF THE REPUBLIC OF KOREA

DATE OF REGISTRATION	13/11/2014
TITLE	TELEVISION

PRIORITY

PRIORITY NUMBER	DATE	COUNTRY
30-2014-0023892	14/05/2014	REPUBLIC OF KOREA

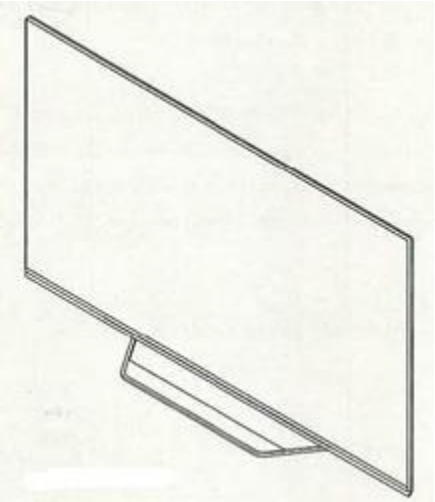

DESIGN NUMBER	268334
CLASS	29-02

1)DIRECTOR GENERAL, DEFENCE RESEARCH & DEVELOPMENT ORGANISATION, MINISTRY OF DEFENCE, GOVT. OF INDIA,
ROOM NO. 348, B-WING, DRDO BHAWAN, RAJAJI MARG, NEW DELHI-110011 INDIA; NATIONALITY: INDIAN

DATE OF REGISTRATION	22/12/2014
TITLE	CASUALTY EVACUATING BAG

PRIORITY NA

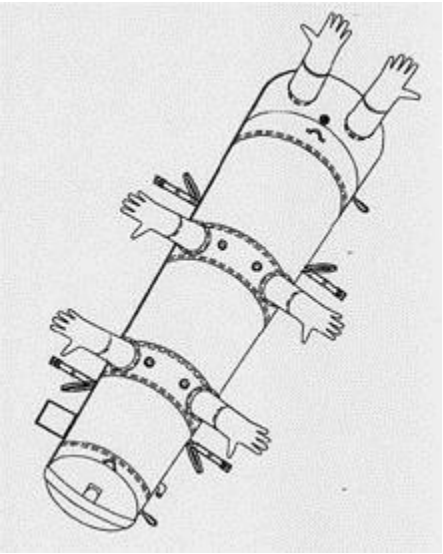

DESIGN NUMBER	270571
CLASS	31-00

1)ROKSAM ENTERPRISES PVT. LTD., A PRIVATE LIMITED COMPANY INCORPORATED UNDER INDIAN COMPANIES ACT, HAVING ITS ADDRESS AT
C-701, MARATHON NEXTGEN PIRAMAL MILL COMPOUND, GANPATRAO KADAM MARG, LOWER PAREL, MUMBAI-400013, INDIA

DATE OF REGISTRATION	25/03/2015
TITLE	CAP OF MIXER BLENDER JAR

PRIORITY NA

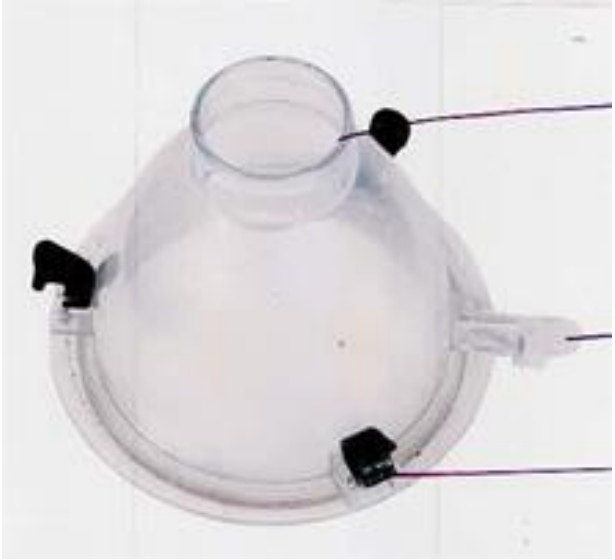

DESIGN NUMBER	268686
CLASS	24-02

1)LIFE TECHNOLOGIES CORPORATION, OF
5791 VAN ALLEN WAY, CARLSBAD, CA 92008, USA

DATE OF REGISTRATION	07/01/2015
TITLE	CELL COUNTER

PRIORITY

PRIORITY NUMBER	DATE	COUNTRY
29/496,665	16/07/2014	U.S.A.

DESIGN NUMBER	269700
CLASS	15-09

1)VILAS CHHIKARA, AN INDIAN CITIZEN ADDRESS AT
V.P.O. LADRAWAN, DISTRICT-JHAJJAR, TEHSIL-BHADURGARH, PINCODE-124507, HARYANA, INDIA

DATE OF REGISTRATION	20/02/2015
TITLE	MOBILE BRICK MAKING MACHINE

PRIORITY NA

DESIGN NUMBER	270572
CLASS	31-00
1)ROKSAM ENTERPRISES PVT. LTD., A PRIVATE LIMITED COMPANY INCORPORATED UNDER INDIAN COMPANIES ACT, HAVING ITS ADDRESS AT C-701, MARATHON NEXTGEN PIRAMAL MILL COMPOUND, GANPATRAO KADAM MARG, LOWER PAREL, MUMBAI-400013, INDIA	
DATE OF REGISTRATION	25/03/2015
TITLE	CAP OF MIXER GRINDER JAR
PRIORITY NA	

DESIGN NUMBER	271457
CLASS	05-05
1)PARRY MURRAY & CO. LTD., COMPANY REGISTERED UNDER THE LAWS OF ENGLAND AND WALES, HAVING ITS PRINCIPAL PLACE OF BUSINESS AT 3RD FLOOR, SIMPSON HOUSE, 6 CHERRY ORCHARD ROAD, CROYDON, CRO 6BA, UNITED KINGDOM	
DATE OF REGISTRATION	16/04/2015
TITLE	TEXTILE FABRIC
PRIORITY NA	

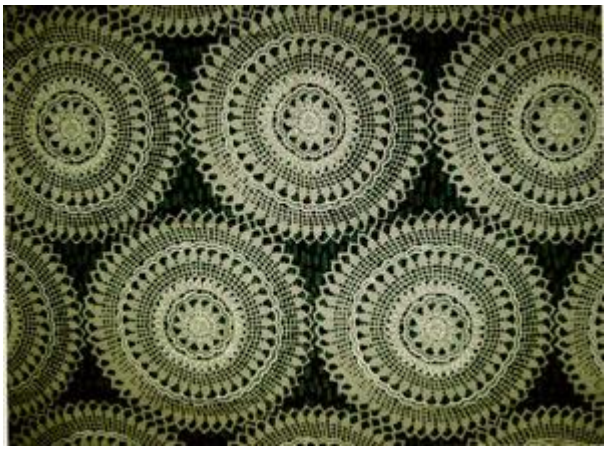

DESIGN NUMBER	267300
CLASS	12-08
1)RCJ AUTO FORGE PVT LTD., E-756-757, PHASE-VII, FOCAL POINT, LUDHIANA-141010 (PUNJAB) INDIA (AN INDIAN COMPANY DULY REGISTERED UNDER THE COMPANIES ACT, 1956) OF THE ABOVE ADDRESS	
DATE OF REGISTRATION	10/11/2014
TITLE	BODY FOR AUTO RICKSHAW
PRIORITY NA	

DESIGN NUMBER	268280
CLASS	13-99
1)TATA POWER SOLAR SYSTEMS LIMITED, AN INDIAN COMPANY OF 78, ELECTRONIC CITY, HOSUR ROAD, BANGALORE 560100, KARNATAKA, INDIA	
DATE OF REGISTRATION	18/12/2014
TITLE	BRACKET FOR FORMING SOLAR PANEL MOUNTING FRAME
PRIORITY NA	

DESIGN NUMBER	271572
CLASS	19-06
1)ANIS AHMED, 7815/9, ILYAS BUILDING, NAI BASTI, BARA HINDU RAO, DELHI-110006 (INDIA), (AN INDIAN NATIONAL)	
DATE OF REGISTRATION	21/04/2015
TITLE	PENCIL BOX
PRIORITY NA	

DESIGN NUMBER	268602
CLASS	14-03
1)DAIKIN INDUSTRIES LTD. A JAPANESE COMPANY OF THE ADDRESS: UMEDA CENTER BUILDING, 4-12 NAKAZAKI-NISHI 2-CHOME, KITA-KU, OSAKA-SHI, OSAKA-FU, JAPAN	
DATE OF REGISTRATION	01/01/2015
TITLE	REMOTE CONTROLLER FOR AIR CONDITIONER

PRIORITY

PRIORITY NUMBER	DATE	COUNTRY
2014-015286	14/07/2014	JAPAN

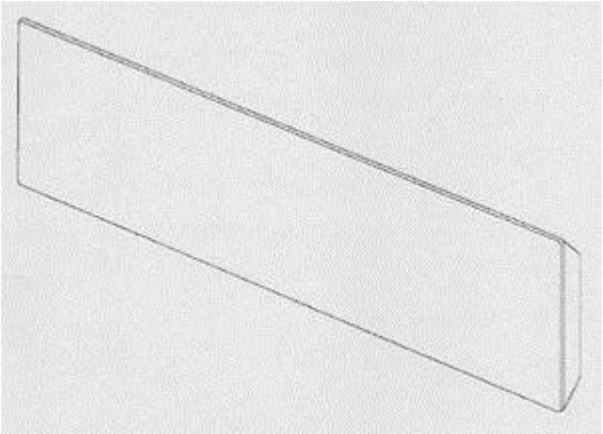

DESIGN NUMBER	268688
CLASS	14-03

1)GIONEE COMMUNICATION EQUIPMENT CO., LTD. SHENZHEN, A COMPANY INCORPORATED UNDER THE LAWS OF CHINA, NATIONALITY: P.R.CHINA, ADDRESS AT
21/F, TIMES TECHNOLOGY BUILDING, 7028 SHENNAN ROAD, FUTIAN DISTRICT, SHENZHEN, GUANGDONG, CHINA

DATE OF REGISTRATION	07/01/2015
TITLE	MOBILE PHONE

PRIORITY

PRIORITY NUMBER	DATE	COUNTRY
201430279514.6	08/08/2014	CHINA

DESIGN NUMBER	269703
CLASS	21-02

1)POWERWAVE SPORT LIMITED, OF THE ADDRESS
7 SOUTHBANK, HEXTABLE, BR8 7PP UNITED KINGDOM

DATE OF REGISTRATION	20/02/2015
TITLE	FITNESS EQUIPMENT

PRIORITY

PRIORITY NUMBER	DATE	COUNTRY
002529131-0002	01/09/2014	OHIM

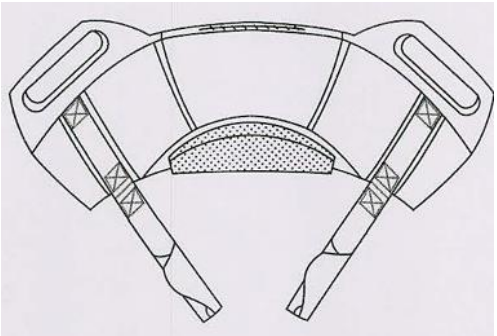

DESIGN NUMBER	270573
CLASS	31-00

1)ROKSAM ENTERPRISES PVT. LTD., A PRIVATE LIMITED COMPANY INCORPORATED UNDER INDIAN COMPANIES ACT, HAVING ITS ADDRESS AT
C-701, MARATHON NEXTGEN PIRAMAL MILL COMPOUND, GANPATRAO KADAM MARG, LOWER PAREL, MUMBAI-400013, INDIA

DATE OF REGISTRATION	25/03/2015
TITLE	BLENDER JAR

PRIORITY NA

DESIGN NUMBER	269051
CLASS	14-03

1)GIONEE COMMUNICATION EQUIPMENT CO., LTD. SHENZHEN, A COMPANY INCORPORATED UNDER THE LAWS OF CHINA, NATIONALITY: P.R.CHINA, ADDRESS AT
21/F, TIMES TECHNOLOGY BUILDING, 7028 SHENNAN ROAD, FUTIAN DISTRICT, SHENZHEN, GUANGDONG, CHINA

DATE OF REGISTRATION	23/01/2015
TITLE	MOBILE PHONE

PRIORITY

PRIORITY NUMBER	DATE	COUNTRY
201430483104.3	28/11/2014	CHINA

DESIGN NUMBER	270574
CLASS	31-00

1)ROKSAM ENTERPRISES PVT. LTD., A PRIVATE LIMITED COMPANY INCORPORATED UNDER INDIAN COMPANIES ACT, HAVING ITS ADDRESS AT
C-701, MARATHON NEXTGEN PIRAMAL MILL COMPOUND, GANPATRAO KADAM MARG, LOWER PAREL, MUMBAI-400013, INDIA

DATE OF REGISTRATION	25/03/2015
TITLE	BASE OF MIXER

PRIORITY NA

DESIGN NUMBER	271460
CLASS	05-05

1)PARRY MURRAY & CO. LTD., COMPANY REGISTERED UNDER THE LAWS OF ENGLAND AND WALES, HAVING ITS PRINCIPAL PLACE OF BUSINESS AT
3RD FLOOR, SIMPSON HOUSE, 6 CHERRY ORCHARD ROAD, CROYDON, CRO 6BA, UNITED KINGDOM

DATE OF REGISTRATION	16/04/2015
TITLE	TEXTILE FABRIC

PRIORITY NA

DESIGN NUMBER	270899
CLASS	11-01
1)MR. JIGNESH RAMESHBHAI SHAH; AN INDIAN NATIONAL WHOSE ADDRESS IS 3RD FLOOR, PANNA MANEK BUILDING, OPP MAA ASHAPURA TEMPLE, PALACE ROAD, RAJKOT-360001, GUJARAT, INDIA	
DATE OF REGISTRATION	01/04/2015
TITLE	PENDANT AND EARRING SET
PRIORITY NA	

DESIGN NUMBER	267479
CLASS	09-09
1)PRADIP BAISHYA, H. NO. 112, INDRAPUR PATH, JYOTINAGAR, P.O.-BAMUNIMAIDAN, GUWAHATI-781021, ASSAM, NATIONALITY-INDIAN	
DATE OF REGISTRATION	18/11/2014
TITLE	WASTE SEGREGATION BIN
PRIORITY NA	

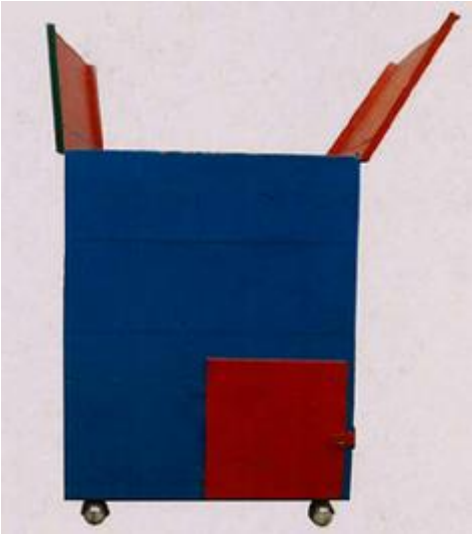

DESIGN NUMBER	270766
CLASS	12-11
1)HERO CYCLES LIMITED, HERO NAGAR, G. T. ROAD, LUDHIANA-141003 (PUNJAB), INDIA, (AN INDIAN COMPANY DULY INCORPORATED UNDER THE PROVISIONS OF INDIAN COMPANIES ACT, 1956)	
DATE OF REGISTRATION	30/03/2015
TITLE	BOTTOM BRACKET AXLE FOR BICYCLE
PRIORITY NA	

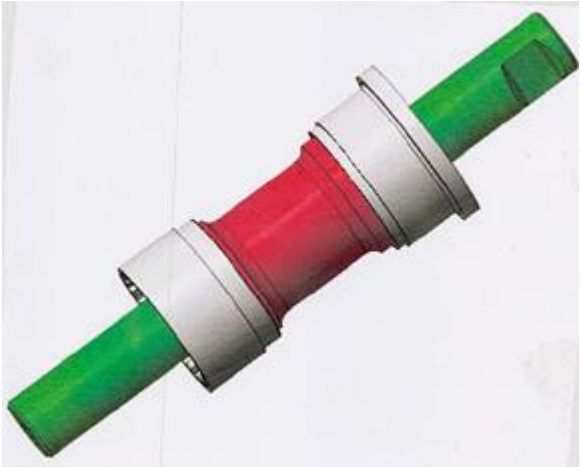

DESIGN NUMBER	270365
CLASS	06-01
1)MR. MOHAMMED ADATTIL, (INDIAN) MANAGING PARTNER OF M/S CLASSY FURNITURE, OPP. TOWN HALL, MUNICIPAL SHOPPING COMPLEX, KALAMASSERY, COCHIN KERALA, INDIA	
DATE OF REGISTRATION	16/03/2015
TITLE	CHAIR
PRIORITY NA	

DESIGN NUMBER	271463
CLASS	05-05
1)PARRY MURRAY & CO. LTD., COMPANY REGISTERED UNDER THE LAWS OF ENGLAND AND WALES, HAVING ITS PRINCIPAL PLACE OF BUSINESS AT 3RD FLOOR, SIMPSON HOUSE, 6 CHERRY ORCHARD ROAD, CROYDON, CRO 6BA, UNITED KINGDOM	
DATE OF REGISTRATION	16/04/2015
TITLE	TEXTILE FABRIC
PRIORITY NA	

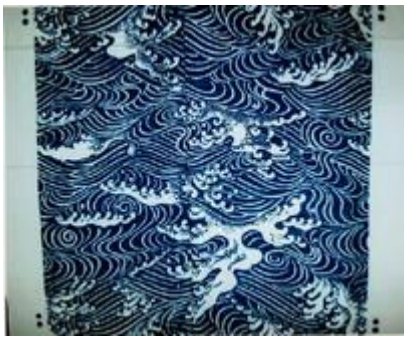

DESIGN NUMBER	268096
CLASS	09-05
1)HECTOR BEVERAGES PRIVATE LIMITED, A COMPANY INCORPORATED IN INDIA HAVING ADDRESS AS B-82, SOUTH CITY 1, GURGAON, HARYANA-122001, INDIA	
DATE OF REGISTRATION	10/12/2014
TITLE	POUCH WITH CAP
PRIORITY NA	

DESIGN NUMBER	267319
CLASS	08-06
1)SANVI ENTERPRISE, AN INDIAN ENTITY HAVING ITS PRINCIPAL PLACE OF BUSINESS AT NATIONAL HIGHWAY 8-B, OPPOSITE PARIN FURNITURE, KOTHARIYA SOLVENT AREA, NEAR DHOKIYA MOTORS, KOTHARIYA, DIST: RAJKOT-360004, GUJARAT, INDIA	
DATE OF REGISTRATION	11/11/2014
TITLE	CABINET HANDLE
PRIORITY NA	

DESIGN NUMBER	268293
CLASS	13-03
1)ANCHOR ELECTRICALS PRIVATE LIMITED, AN INDIAN COMPANY STEEL HOUSE, B WING, PLOT NO. 24, MAHAL INDUSTRIAL ESTATE, MAHAKALI CAVES ROAD, NEAR PAPER BOX, ANDHERI (E), MUMBAI, 400093, INDIA	
DATE OF REGISTRATION	19/12/2014
TITLE	MINIATURE CIRCUIT BREAKER CHANGEOVER SWITCH
PRIORITY NA	

DESIGN NUMBER	271576
CLASS	02-04
1)M/S. AEROBOK SHOE PVT. LTD., 1459, M.I.E., PART-II, BAHADURGARH-124507 [HARYANA], INDIA [AN INDIAN PRIVATE LIMITED COMPANY]	
DATE OF REGISTRATION	21/04/2015
TITLE	FOOTWEAR
PRIORITY NA	

DESIGN NUMBER	267197
CLASS	26-03

1)SCHREDER S.A. OF
RUE DE LUSAMBO, 67, B. 1190 BRUXELLES, BELGIUM, A BELGIUM COMPANY

DATE OF REGISTRATION	03/11/2014
TITLE	BRACKET FOR LIGHTING FIXTURE

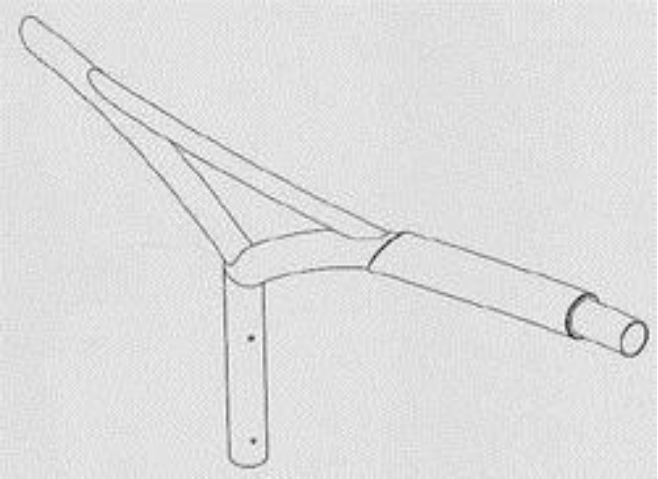

PRIORITY

PRIORITY NUMBER	DATE	COUNTRY
002471375-0001	27/05/2014	OHIM

DESIGN NUMBER	268743
CLASS	14-01

1)HARMAN INTERNATIONAL INDUSTRIES, INCORPORATED, A CORPORATION ORGANIZED AND EXISTING UNDER THE US LAW, OF
8500 BALBOA BOULEVARD, NORTHRIDGE, CA 91329, UNITED STATES OF AMERICA

DATE OF REGISTRATION	09/01/2015
TITLE	PORTABLE LOUDSPEAKER

PRIORITY

PRIORITY NUMBER	DATE	COUNTRY
29/496291	11/07/2014	U.S.A.

DESIGN NUMBER	270166
CLASS	08-07

1)RAVINDRA ARVIND YEOLEKAR HAVING ADDRESS AS
RAVIRAJ, 7B, ANUREKHA SOCIETY, NAVSAHYADRI, PUNE-411052, MAHARASHTRA

DATE OF REGISTRATION	09/03/2015
TITLE	HYDRAULIC DOOR CLOSER

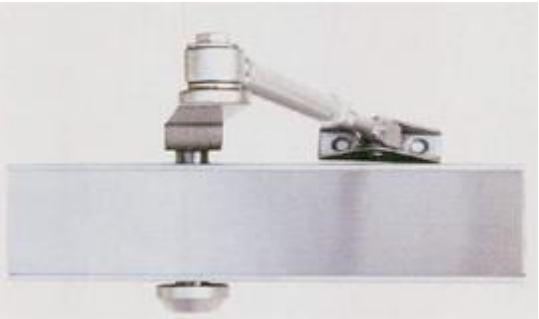

PRIORITY NA

DESIGN NUMBER	269226
CLASS	09-01
1)GENMEDIC HEALTHCARE PVT LTD, AT SURVEY NO. 58 & 61, FLAT NO. 502, P.No: 4 & 5 SHILPA PARK, KONDAPUR, HYDERABAD 500084,	
DATE OF REGISTRATION	02/02/2015
TITLE	JAR
PRIORITY NA	

DESIGN NUMBER	269055
CLASS	14-99
1)EON INFOTECH LIMITED AN INDIAN COMPANY CARRYING ON ITS BUSINESS AT C-180, PHASE 8-B, MOHALI, PUNJAB, INDIA	
DATE OF REGISTRATION	23/01/2015
TITLE	ELECTRONIC VEHICLE TRACKING SYSTEM
PRIORITY NA	

DESIGN NUMBER	270367
CLASS	06-03
1)MR. MOHAMMED ADATTIL, (INDIAN) MANAGING PARTNER OF M/S CLASSY FURNITURE, OPP. TOWN HALL, MUNICIPAL SHOPPING COMPLEX, KALAMASSERY, COCHIN KERALA, INDIA	
DATE OF REGISTRATION	16/03/2015
TITLE	TEAPOY
PRIORITY NA	

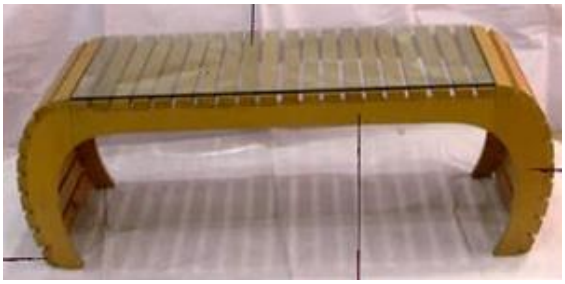

DESIGN NUMBER	270901
CLASS	11-01
1)MR. JIGNESH RAMESHBHAI SHAH; AN INDIAN NATIONAL WHOSE ADDRESS IS 3RD FLOOR, PANNA MANEK BUILDING, OPP MAA ASHAPURA TEMPLE, PALACE ROAD, RAJKOT-360001, GUJARAT, INDIA	
DATE OF REGISTRATION	01/04/2015
TITLE	PENDANT AND EARRING SET
PRIORITY NA	

DESIGN NUMBER	271747
CLASS	08-06
1)PARESHBHAI VALLABHBHAI VIRADIA (ADULT & INDIAN NATIONAL) HAVING PLACE OF BUSINESS AT- PARSANA SOCIETY, STREET NO. 3-A, 50 FEET ROAD, KOTHARIYA MAIN ROAD, RAJKOT-360002-GUJARAT-(INDIA)	
DATE OF REGISTRATION	28/04/2015
TITLE	HANDLE
PRIORITY NA	

DESIGN NUMBER	268115
CLASS	24-02
1)KONINKLIJKE PHILIPS N.V., A COMPANY ORGANIZED AND EXISTING UNDER THE LAWS OF THE KINGDOM OF THE NETHERLANDS, RESIDING AT EINDHOVEN, WHOSE POST-OFFICE ADDRESS IS HIGH TECH CAMPUS 5, 5656 AE EINDHOVEN, THE NETHERLANDS	
DATE OF REGISTRATION	10/12/2014
TITLE	CUSHION FOR A PATIENT INTERFACE DEVICE

PRIORITY

PRIORITY NUMBER	DATE	COUNTRY
002485151-0002	18/06/2014	OHIM

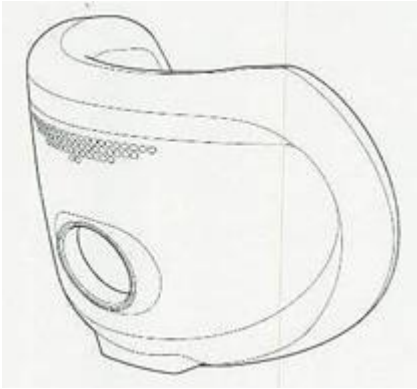

DESIGN NUMBER	268682
CLASS	14-01

1)AKG ACOUSTICS GMBH, A CORPORATION ORGANIZED AND EXISTING UNDER THE AUSTRIAN LAW, OF
LAXENBURGER STRAßE 254, 1230 VIENNA, AUSTRIA

DATE OF REGISTRATION	07/01/2015
TITLE	HEADPHONE

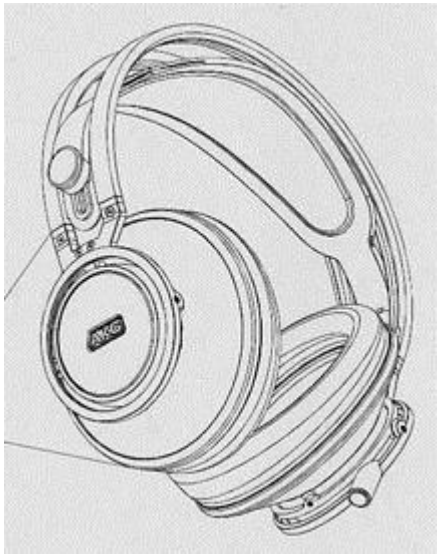

PRIORITY

PRIORITY NUMBER	DATE	COUNTRY
29/496,016	08/07/2014	U.S.A.

DESIGN NUMBER	267365
CLASS	15-04

1)MAHINDRA & MAHINDRA LIMITED, A COMPANY INCORPORATED UNDER THE COMPANIES ACT, 1956 WHOSE ADDRESS IS
GATEWAY BUILDING, APOLLO BUNDER, MUMBAI 400001, MAHARASHTRA, INDIA

DATE OF REGISTRATION	13/11/2014
TITLE	TOOTH FOR A BUCKET OF A BACKHOE LOADER

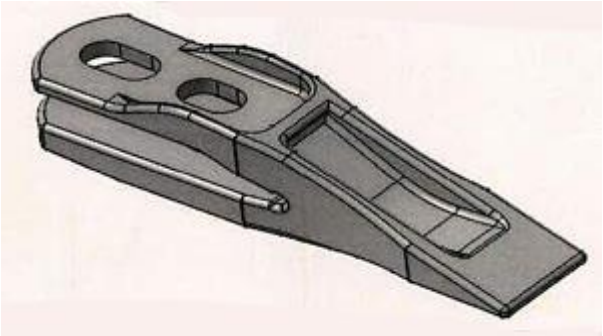

PRIORITY NA

DESIGN NUMBER	268332
CLASS	13-03

1)YAZAKI CORPORATION, A JAPANESE CORPORATION OF
4-28, MITA 1-CHOME, MINATO-KU, TOKYO 108-0073, JAPAN

DATE OF REGISTRATION	22/12/2014
TITLE	ELECTRICAL CONNECTOR HOUSING

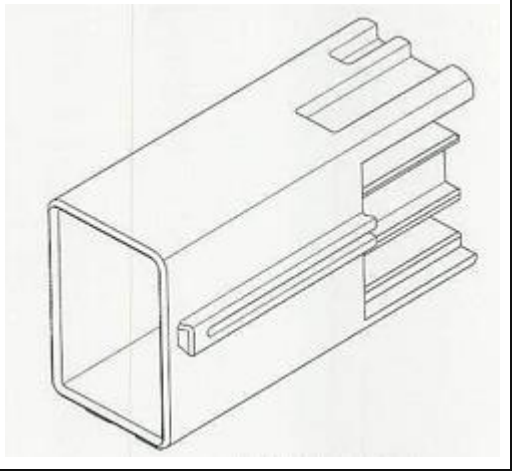

PRIORITY

PRIORITY NUMBER	DATE	COUNTRY
2014-014000	26/06/2014	JAPAN

DESIGN NUMBER	270570
CLASS	31-00
1)ROKSAM ENTERPRISES PVT. LTD., A PRIVATE LIMITED COMPANY INCORPORATED UNDER INDIAN COMPANIES ACT, HAVING ITS ADDRESS AT C-701, MARATHON NEXTGEN PIRAMAL MILL COMPOUND, GANPATRAO KADAM MARG, LOWER PAREL, MUMBAI-400013, INDIA	
DATE OF REGISTRATION	25/03/2015
TITLE	GRINDER JAR
PRIORITY NA	

DESIGN NUMBER	271454
CLASS	05-05
1)PARRY MURRAY & CO. LTD., COMPANY REGISTERED UNDER THE LAWS OF ENGLAND AND WALES, HAVING ITS PRINCIPAL PLACE OF BUSINESS AT 3RD FLOOR, SIMPSON HOUSE, 6 CHERRY ORCHARD ROAD, CROYDON, CRO 6BA, UNITED KINGDOM	
DATE OF REGISTRATION	16/04/2015
TITLE	TEXTILE FABRIC
PRIORITY NA	

DESIGN NUMBER	271581
CLASS	02-04
1)M/S. AEROBOK SHOE PVT. LTD., 1459, M.I.E., PART-II, BAHADURGARH-124507 [HARYANA], INDIA [AN INDIAN PRIVATE LIMITED COMPANY]	
DATE OF REGISTRATION	21/04/2015
TITLE	FOOTWEAR
PRIORITY NA	

DESIGN NUMBER	271732
CLASS	02-04
1)AMBIKA FOOTWEAR PVT. LTD., A COMPANY DULY INCORPORATED UNDER THE INDIAN COMPANIES ACT, 1956 HAVING ITS OFFICE AT J-4, UDYOG NAGAR, INDUSTRIAL AREA, DELHI-110041	
DATE OF REGISTRATION	27/04/2015
TITLE	SLIPPER
PRIORITY NA	

DESIGN NUMBER	268763
CLASS	19-06
1)JOYFUL PLASTICS PRIVATE LIMITED, A COMPANY REGISTERED IN INDIA, HAVING ITS REGISTERED OFFICE AT 20, A/F, NEW EMPIRE INDUSTRIAL ESTATE, KONDIVITA ROAD, J.B.NAGAR, ANDHERI(E), MUMBAI-400059 STATE OF MAHARASHTRA, INDIA, OF ABOVE ADDRESS	
DATE OF REGISTRATION	09/01/2015
TITLE	PENCIL BOX
PRIORITY NA	

DESIGN NUMBER	268380
CLASS	29-01
1)HONEYWELL INTERNATIONAL INC., A CORPORATION ORGANIZED AND EXISTING UNDER THE LAWS OF THE STATE OF DELAWARE, OF 101 COLUMBIA ROAD, P.O. BOX 2245, MORRISTOWN NEW JERSEY 07962-2245, USA	
DATE OF REGISTRATION	24/12/2014
TITLE	OPTICAL BLOCK FOR SMOKE DETECTORS

PRIORITY

PRIORITY NUMBER	DATE	COUNTRY
29/495,060	26/06/2014	U.S.A.

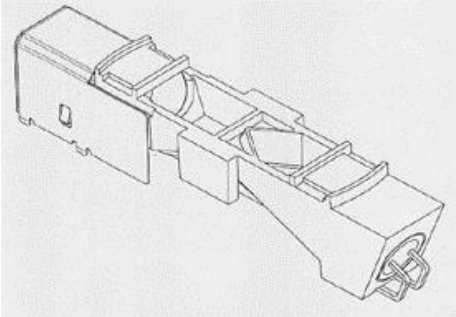

DESIGN NUMBER	269296
CLASS	08-07

1)SIDDHARTH SUSHIL VAID, AN INDIAN NATIONAL,
RAHEJA WILLOWS, 1803 SILVER OAK, AKURLI ROAD, KANDIVALI(E), MUMBAI-400101, MAHARASHTRA, INDIA

DATE OF REGISTRATION	04/02/2015
TITLE	INTERLOCKING SEAL

PRIORITY NA

DESIGN NUMBER	268749
CLASS	08-03

1)SUMITOMO ELECTRIC HARDMETAL CORP., A JAPANESE CORPORATION, OF
1-1, KOYAKITA 1-CHOME, ITAMI-SHI, HYOGO 664-0016, JAPAN

DATE OF REGISTRATION	09/01/2015
TITLE	TIP FOR CUTTING TOOL

PRIORITY

PRIORITY NUMBER	DATE	COUNTRY
2014-015038	09/07/2014	JAPAN

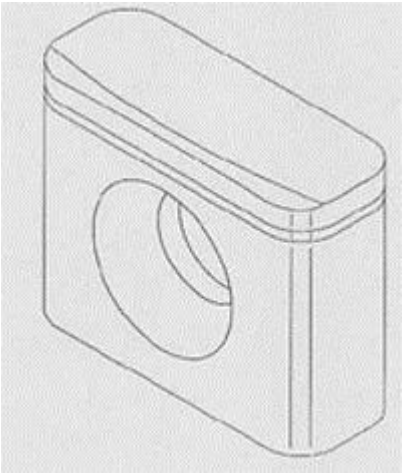

DESIGN NUMBER	268379
CLASS	29-01

1)HONEYWELL INTERNATIONAL INC., A CORPORATION ORGANIZED AND EXISTING UNDER THE LAWS OF THE STATE OF DELAWARE, OF
101 COLUMBIA ROAD, P.O. BOX 2245, MORRISTOWN NEW JERSEY 07962-2245, USA

DATE OF REGISTRATION	24/12/2014
TITLE	OPTICAL BLOCK FOR SMOKE DETECTORS

PRIORITY

PRIORITY NUMBER	DATE	COUNTRY
29/495,060	26/06/2014	U.S.A.

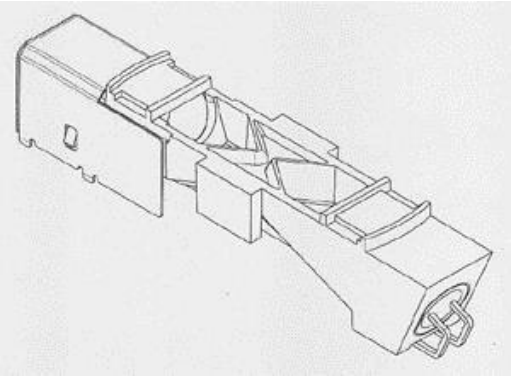

DESIGN NUMBER	269780
CLASS	09-01
1)DHARAMPAL SATYAPAL SONS PVT. LTD. A COMPANY INCORPORATED UNDER THE INDIAN COMPANIES ACT, 1956, NATIONALITY-INDIAN COMPANY, ADDRESS- 4828/24, PRAHLAD LANE, ANSARI ROAD, DARYAGANJ, DELHI	
DATE OF REGISTRATION	23/02/2015
TITLE	POT
PRIORITY NA	

DESIGN NUMBER	268113
CLASS	13-03
1)WÖHNER GMBH & CO. KG ELEKTROTECHNISCHE SYSTEME, A COMPANY EXISTING UNDER THE LAWS OF GERMANY, MÖNCHRÖDENER STR. 10, 86472 RÖDENTAL, GERMANY.	
DATE OF REGISTRATION	10/12/2014
TITLE	FUSE SWITCH DISCONNECTION MODULE

PRIORITY

PRIORITY NUMBER	DATE	COUNTRY
002513424-0005	01/08/2014	EUROPEAN UNION

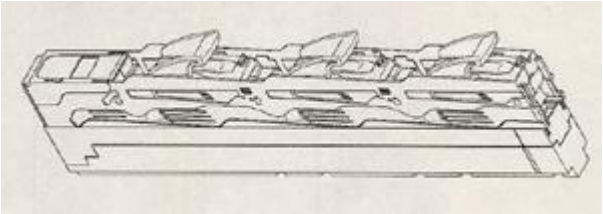

DESIGN NUMBER	267358
CLASS	24-02
1)KARL STORZ GMBH & CO. KG, A GERMAN COMPANY OF MITTELSTRASSE 8, D-78532 TUTTLINGEN, GERMANY	
DATE OF REGISTRATION	13/11/2014
TITLE	VIDEO ENDOSCOPE

PRIORITY

PRIORITY NUMBER	DATE	COUNTRY
002465609-0001	16/05/2014	OHIM

DESIGN NUMBER	268330
CLASS	13-03

1)YAZAKI CORPORATION, A JAPANESE CORPORATION OF
4-28, MITA 1-CHOME, MINATO-KU, TOKYO 108-0073, JAPAN

DATE OF REGISTRATION	22/12/2014
TITLE	ELECTRICAL CONNECTOR HOUSING

PRIORITY

PRIORITY NUMBER	DATE	COUNTRY
2014-013994	26/06/2014	JAPAN

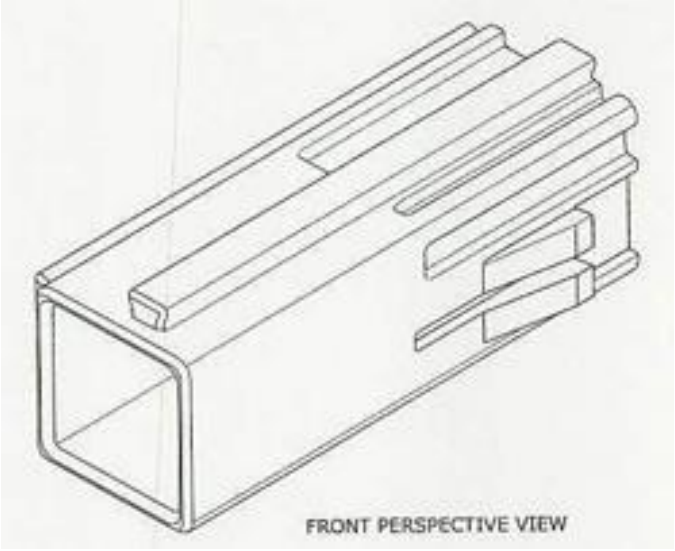

DESIGN NUMBER	271451
CLASS	05-05

1)PARRY MURRAY & CO. LTD., COMPANY REGISTERED UNDER THE LAWS OF ENGLAND AND WALES, HAVING ITS PRINCIPAL PLACE OF BUSINESS AT
3RD FLOOR, SIMPSON HOUSE, 6 CHERRY ORCHARD ROAD, CROYDON, CRO 6BA, UNITED KINGDOM

DATE OF REGISTRATION	16/04/2015
TITLE	TEXTILE FABRIC

PRIORITY NA

DESIGN NUMBER	271579
CLASS	02-04

1)M/S. AEROBOK SHOE PVT. LTD.,
1459, M.I.E., PART-II, BAHADURGARH-124507 [HARYANA], INDIA [AN INDIAN PRIVATE LIMITED COMPANY]

DATE OF REGISTRATION	21/04/2015
TITLE	FOOTWEAR

PRIORITY NA

DESIGN NUMBER	271730
CLASS	09-01
1)M/S. SSP PLASTIPACK PVT. LTD., A COMPANY DULY INCORPORATED UNDER THE INDIAN COMPANIES ACT, 1956, HAVING ITS OFFICE AT K-13, SECTOR-1, DSIIDC, BAWANA, DELHI	
DATE OF REGISTRATION	27/04/2015
TITLE	BOTTLE
PRIORITY NA	

DESIGN NUMBER	267293
CLASS	10-02
1)TURLEN HOLDING SA, A SWISS COMPANY, C/O SIPO S.A., CHEMIN DU CHÂTEAU 26A, 2805 SOYHIÈRES, SWITZERLAND	
DATE OF REGISTRATION	10/11/2014
TITLE	WRIST WATCH WITHOUT BRACELET

PRIORITY

PRIORITY NUMBER	DATE	COUNTRY
824980801	08/07/2014	WIPO

DESIGN NUMBER	269420
CLASS	24-01
1)CHRISTOPHER JOHN FARRELL, AUSTRALIAN NATIONAL, OF 44 SIGANTO DRIVE, HELENSVALE QUEENSLAND, 4212, AUSTRALIA.	
DATE OF REGISTRATION	09/02/2015
TITLE	ORTHODONTIC APPLIANCE
PRIORITY NA	

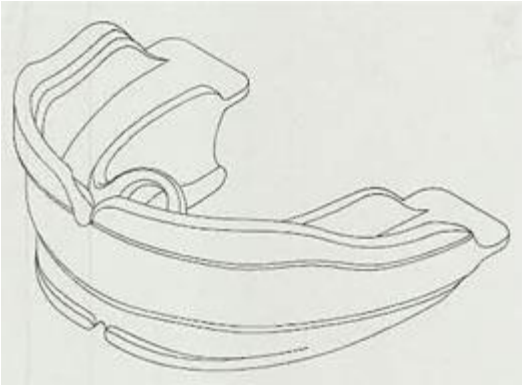

DESIGN NUMBER	268966
CLASS	12-15
1)M/S GOVIND RUBBER LIMITED AN INDIAN COMPANY DULY INCORPORATED UNDER THE COMPANIES ACT, 1956 OF 418, CREATIVE INDUSTRIAL ESTATE, SITARAM MILLS COMPOUND, N.M. JOSHI MARG, LOWER PAREL, MUMBAI-400011, MAHARASHTRA, INDIA	
DATE OF REGISTRATION	20/01/2015
TITLE	TYRE
PRIORITY NA	

DESIGN NUMBER	269611
CLASS	07-02
1)ANANTHA NARAYAN AND JOSEPH BABIN, INDIAN NATIONALS, HAVING ADDRESS AT WANNAWILL INVENTORIUM, 85/89, GROUND FLOOR, ASPIRAN GARDEN SECOND STREET, KILPAUK, CHENNAI-10, TAMILNADU, INDIA	
DATE OF REGISTRATION	13/02/2015
TITLE	COOKING UTENSIL
PRIORITY NA	

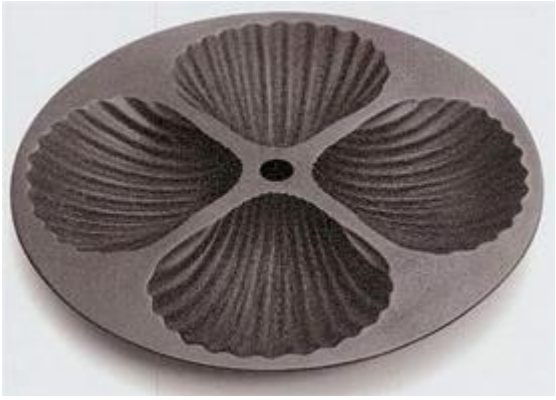

DESIGN NUMBER	267296
CLASS	09-03
1)INTERNATIONAL BUSINESS STRUCTURING, D-925, NEW FRIENDS COLONY, NEW DELHI-110025, INDIA (AN INDIAN PROPRIETORSHIP FIRM WHOSE PROPRIETOR IS:- RASSIK WOODWORTH LIMITED AN INDIAN NATIONAL OF THE ABOVE ADDRESS	
DATE OF REGISTRATION	10/11/2014
TITLE	BOX
PRIORITY NA	

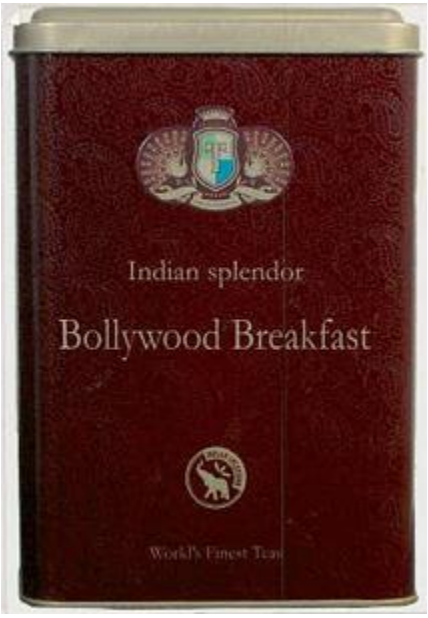

DESIGN NUMBER	268279
CLASS	13-99
1)TATA POWER SOLAR SYSTEMS LIMITED, AN INDIAN COMPANY OF 78, ELECTRONIC CITY, HOSUR ROAD, BANGALORE 560100, KARNATAKA, INDIA	
DATE OF REGISTRATION	18/12/2014
TITLE	BRACKET FOR FORMING SOLAR PANEL MOUNTING FRAME
PRIORITY NA	

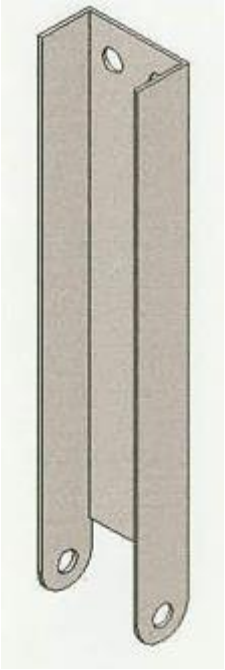

DESIGN NUMBER	269423
CLASS	09-01
1)UNILEVER PLC, A COMPANY REGISTERED IN ENGLAND AND WALES UNDER COMPANY NO. 41424 OF UNILEVER HOUSE, 100 VICTORIA EMBANKMENT, LONDON, EC4Y 0DY, UNITED KINGDOM	
DATE OF REGISTRATION	09/02/2015
TITLE	DISPENSER REFILL

PRIORITY

PRIORITY NUMBER	DATE	COUNTRY
29/500611	27/08/2014	U.S.A.

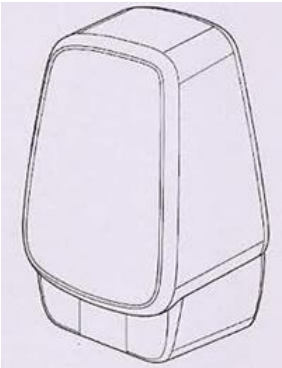

DESIGN NUMBER	270030
CLASS	02-02
1)M/S BOOK MY WISH E-COMMERCE PVT. LTD. WHOSE ADDRESS IS- BASEMENT, MIHIR TOWER, OPP. HIRABHAI TOWER, JAWAHAR CHOWK, MANINAGAR, AHMEDABAD-380008, GUJARAT, INDIA	
DATE OF REGISTRATION	02/03/2015
TITLE	GARMENT
PRIORITY NA	

DESIGN NUMBER	268968
CLASS	12-15

1)M/S GOVIND RUBBER LIMITED AN INDIAN COMPANY DULY INCORPORATED UNDER THE COMPANIES ACT, 1956 OF
418, CREATIVE INDUSTRIAL ESTATE, SITARAM MILLS COMPOUND, N.M. JOSHI MARG, LOWER PAREL, MUMBAI-400011, INDIA

DATE OF REGISTRATION	20/01/2015
TITLE	TYRE

PRIORITY NA

DESIGN NUMBER	271571
CLASS	23-04

1)PAWAN JAIN,
304/6, JACUBPURA, (BEHIND SAMRAT FURNITURE) GURGAON-122001 [HARYANA] (INDIA), (AN INDIAN NATIONAL)

DATE OF REGISTRATION	21/04/2015
TITLE	COOLER

PRIORITY NA

DESIGN NUMBER	268601
CLASS	14-03

1)DAIKIN INDUSTRIES LTD. A JAPANESE COMPANY OF THE ADDRESS:
UMEDA CENTER BUILDING, 4-12 NAKAZAKI-NISHI 2-CHOME, KITA-KU, OSAKA-SHI, OSAKA-FU, JAPAN

DATE OF REGISTRATION	01/01/2015
TITLE	REMOTE CONTROLLER FOR AIR CONDITIONER

PRIORITY

PRIORITY NUMBER	DATE	COUNTRY
2014-015285	14/07/2014	JAPAN