पेटेंट कार्यालय
शासकीय जर्नल

OFFICIAL JOURNAL
OF
THE PATENT OFFICE

निर्गमन सं. 35/2015	शुक्रवार	दिनांक: 28/08/2015
ISSUE NO. 35/2015	FRIDAY	DATE: 28/08/2015

पेटेंट कार्यालय का एक प्रकाशन

PUBLICATION OF THE PATENT OFFICE

INTRODUCTION

In view of the recent amendment made in the Patents Act, 1970 by the Patents (Amendment) Act, 2005 effective from 01st January 2005, the Official Journal of The Patent Office is required to be published under the Statute. This Journal is being published on weekly basis on every Friday covering the various proceedings on Patents as required according to the provision of Section 145 of the Patents Act 1970. All the enquiries on this Official Journal and other information as required by the public should be addressed to the Controller General of Patents, Designs & Trade Marks. Suggestions and comments are requested from all quarters so that the content can be enriched.

(Rajiv Aggarwal)
CONTROLLER GENERAL OF PATENTS, DESIGNS & TRADE MARKS

28th AUGUST, 2015

CONTENTS

THE PATENT OFFICE
KOLKATA, 28/08/2015
Address of the Patent Offices/Jurisdictions
The following are addresses of all the Patent Offices located at different places having their Territorial Jurisdiction on a Zonal basis as shown below:-

1	Office of the Controller General of Patents, Designs & Trade Marks, Boudhik Sampada Bhavan, Near Antop Hill Post Office,S.M.Road,Antop Hill, Mumbai – 400 037 Phone: (91)(22) 24123311, Fax : (91)(22) 24123322 E-mail: cgpdtm@nic.in	4	The Patent Office, Government of India, Intellectual Property Rights Building, G.S.T. Road, Guindy, Chennai – 600 032. Phone: (91)(44) 2250 2081-84 Fax : (91)(44) 2250 2066 E-mail: chennai-patent@nic.in ❖ The States of Andhra Pradesh, Telangana, Karnataka, Kerala, Tamil Nadu and the Union Territories of Puducherry and Lakshadweep.
2	The Patent Office, Government of India, Boudhik Sampada Bhavan, Near Antop Hill Post Office,S.M.Road,Antop Hill, Mumbai – 400 037 Phone: (91)(22) 24137701 Fax: (91)(22) 24130387 E-mail: mumbai-patent@nic.in ❖ The States of Gujarat, Maharashtra, Madhya Pradesh, Goa and Chhattisgarh and the Union Territories of Daman and Diu & Dadra and Nagar Haveli	5	The Patent Office (Head Office), Government of India, Boudhik Sampada Bhavan, CP-2, Sector –V, Salt Lake City, Kolkata- 700 091 Phone: (91)(33) 2367 1943/44/45/46/87 Fax: (91)(33) 2367 1988 E-Mail: kolkata-patent@nic.in ❖ Rest of India
3	The Patent Office, Government of India, Boudhik Sampada Bhavan, Plot No. 32., Sector-14, Dwarka, New Delhi – 110075 Phone: (91)(11) 2808 1921 – 25 Fax: (91)(11) 2808 1920 & 2808 1940 E.mail: delhi-patent@nic.in ❖ The States of Haryana, Himachal Pradesh, Jammu and Kashmir, Punjab, Rajasthan, Uttar Pradesh, Uttaranchal, Delhi and the Union Territory of Chandigarh.		

Website: www.ipindia.nic.in
www.patentoffice.nic.in

All applications, notices, statements or other documents or any fees required by the Patents Act, 1970 and The Patents (Amendment) Act, 2005 or by the Patents (Amendment) Rules, 2006 will be received only at the appropriate offices of the Patent Office.

Fees: The Fees may either be paid in cash or may be sent by Bank Draft or Cheques payable to the Controller of Patents drawn on a scheduled Bank at the place where the appropriate office is situated.

पेटेंट कार्यालय

कोलकाता, दिनांक 28/08/2015

• कार्यालयों के क्षेत्राधिकार के पते

विभिन्न जगहों पर स्थित पेटेंट कार्यालय के पते आंचलिक आधार पर दर्शित उनके प्रादेशिक अधिकार क्षेत्र के साथ नीचे दिए गए है:-

1	कार्यालय : महानियंत्रक, एकस्व, अभिकल्प तथा व्यापार चिहन, एंटोप हिल डाकघर के समीप, एस. एम. रोड, एंटोप हिल, मुम्बई- 400 037, भारत, फोन: (91) (22) 24123311 फ़ैक्स: (91) (22) 24123322 ई. मेल: cgpdtm@nic.in	4	पेटेंट कार्यालय, भारत सरकार इंटेलेक्चुअल प्रॉपर्टी राइट्स बिल्डिंग, इंडस्ट्रियल इस्टेट एसआईडीसीओ आरएमडी गोडाउन एरिया एडजसेन्ट टु ईगल फ्लास्क, जी. एस. टी. रोड, गायन्डी चेन्नई - 600 032. फोन: (91)(44) 2250 2081-84 फ़ैक्स: (91)(44) 2250-2066 ई. मेल: chennai-patent@nic.in ❖ आन्ध्र प्रदेश, तेलंगाना, कर्नाटक, केरल, तमिलनाडु तथा पुडुचेरी राज्य क्षेत्र एवं संघ शासित क्षेत्र, लक्षदीप
2	पेटेंट कार्यालय, भारत सरकार बौद्धिक संपदा भवन, एंटोप हिल डाकघर के समीप, एस. एम. रोड, एंटोप हिल, मुम्बई- 400 037, फोन: (91) (22) 24137701 फ़ैक्स: (91) (22) 24130387 ई. मेल: Mumbai-patent@nic.in ❖ गुजरात, महाराष्ट्र, मध्य प्रदेश, गोवा तथा छत्तीसगढ़ राज्य क्षेत्र एवं संघ शासित क्षेत्र, दमन तथा दीव, दादर और नगर हवेली•	5	पेटेंट कार्यालय, भारत सरकार कोलकाता, (प्रधान कार्यालय) बौद्धिक संपदा भवन, सीपी-2, सेक्टर- V, साल्ट लेक सिटी, कोलकाता-700 091, भारत. फोन: (91)(33) 2367 1943/44/45/46/87 फ़ैक्स:/Fax: (91)(33) 2367 1988 ई. मेल: kolkata-patent@nic.in ❖ भारत का अवशेष क्षेत्र
3	पेटेंट कार्यालय, भारत सरकार बौद्धिक संपदा भवन, प्लॉट सं. 32, सेक्टर- 14, द्वारका, नई दिल्ली- 110 075. फोन: (91)(11) 2808 1921-25 फ़ैक्स: (91)(11) 2808 1920, 2808 1940 ई. मेल: delhi-patent@nic.in हरियाणा, हिमाचल प्रदेश, जम्मू तथा कश्मीर, पंजाब,राजस्थान, उत्तर प्रदेश, दिल्ली तथा उत्तरांचल राज्य क्षेत्रों, एवं संघ शासित क्षेत्र चंडीगढ़		

वेबसाइट: http://www.ipindia.nic.in

www.patentoffice.nic.in

पेटेंट अधिनियम, 1970 तथा पेटेंट (संशोधन) अधिनियम, 2005 अथवा पेटेंट (संशोधन) नियम, 2006 द्वारा वांछित सभी आवेदन, सूचनाए, विवरण या अन्य दस्तावेज़ या कोई शुल्क पेटेंट कार्यालय के केवल उपयुक्त कार्यालय में स्वीकृत होंगे।

शुल्क: शुल्क या तो नगद रूप में या Controller of Patents के नाम में देय बैंक ड्राफ्ट या चेक के द्वारा भेजी जा सकती है जो उसी स्थान के किसी अनुसूचित बैंक में प्रदत्त हो जहाँ उपयुक्त कार्यालय स्थित है ।

SPECIAL NOTICE

18 Months publication as required under Section 11A of the Patents Act, 1970 as amended by the Patents (Amendment) Act, 2005.

Notice is hereby given that any person at any time before the grant of Patent may give representation by way of opposition to the Controller of Patents at appropriate office on the ground and in a manner specified under section 25(1) of the Patents (Amendment) Act, 2005 read with Rule 55 of the Patents (Amendment) Rules, 2006.

Notice is also given that if any interested person requests for copies of the complete specification, drawing and abstract of any application already published, the photocopy of the same can be supplied by the Patent Office as per the jurisdiction on payment of prescribed fees of Rs.8/- per page. If any further details are required to be obtained, the same can be provided by the respective Patent Offices on request.

(Rajiv Aggarwal)
CONTROLLER GENERAL OF PATENTS, DESIGNS & TRADE MARKS

SPECIAL NOTICE

Under the new provision of the Patents Act, 1970 as amended by the Patents (Amendment) Act, 2005 and Rules there under, Publication of the matter relating to Patents in the Official Gazette of India Part III, Section 2 has been discontinued and instead The Official Journal of the Patent Office is being published containing all the activities of The Patent Office such as publication of all the patent applications after 18th months , grant of patents & all other information in respect of the proceedings as required under the provisions of the Patents (Amendment) Act, 2005 and Rules thereunder on weekly basis on every **Friday**.

The Journal is uploaded in the website every Friday. So Paper form and CD-ROM form of the Journal are discontinued from 01/01/2009.

SPECIAL NOTICE

Every effort is being taken to publish all the patent applications under section 11(A) of the Patents Act. However, if duplication of publication of any application is found, then earlier date of publication will be taken for the purpose of provisional protection for applicant and Patent Office will grant Patent not before six months from the date of second publication, provided that there is there is no third party representation.

Early Publication:

The following patent applications have been published under section 11A (2) of The Patents (Amendment) Act 2005 and rule 24A of The Patents (Amendment) Rules, 2006. Any person may file representation by way of opposition to the Controller of Patents at the appropriate office against the grant of the patent in the prescribed manner under section 25(1) of the Patents (Amendment) Act 2005 read with the rule 55 of The Patents (Amendment) Rules, 2006:

(12) PATENT APPLICATION PUBLICATION

(21) Application No.1753/DEL/2015 A

(19) INDIA

(22) Date of filing of Application :11/06/2015

(43) Publication Date : 28/08/2015

(54) Title of the invention : POTENTATE: A CRYPTOGRAPHY-OBFUSCATING, SELF-POLICING, PERVASIVE DISTRIBUTION SYSTEM FOR DIGITAL CONTENT

(51) International classification	:G06F12/14	(71)**Name of Applicant :**
(31) Priority Document No	:NA	**1)VARMA, PRADEEP**
(32) Priority Date	:NA	Address of Applicant :634, SECTOR -21, GURGAON,
(33) Name of priority country	:NA	HARYANA-122016. INDIA. Haryana India
(86) International Application No	:NA	(72)**Name of Inventor :**
Filing Date	:NA	**1)VARMA PRADEEP**
(87) International Publication No	: NA	
(61) Patent of Addition to Application Number	:NA	
Filing Date	:NA	
(62) Divisional to Application Number	:NA	
Filing Date	:NA	

(57) Abstract :
Using commonplace networking or browser software, commonplace hardware (e.g. laptops, servers, mobiles, multimedia players) and content provision over a secure website (https standard), we disclose a system for self-policed, authenticated, offline/online, viral marketing and distribution of content such as software, text, and multimedia with effective copyright and license enforcement and secure selling. The system is based on key, and cryptography hiding techniques, using source-to-source transformation for efficient, holistic steganography that systematically inflates and hides critical code by: computation interleaving; flattening procedure calls and obfuscating stack by de-stacking arguments; obfuscating memory management; and encoding scalars as pointers to managed structures that may be distributed and migrated all over the heap using garbage collection. Multimedia/text content may be partitioned and sold with expiry dates for protection and updates for long life. Authenticity of software installed on a machine may be monitored and ensured, supporting even authentic software deployment in an unknown environment. Figure 1

No. of Pages : 99 No. of Claims : 84

(12) PATENT APPLICATION PUBLICATION
(21) Application No.7079/DELNP/2015 A
(19) INDIA
(22) Date of filing of Application :12/08/2015
(43) Publication Date : 28/08/2015

(54) Title of the invention : ADJUSTABLE RAIL FASTENING ASSEMBLY

(51) International classification :E01B9/46
(31) Priority Document No :13154986.7
(32) Priority Date :12/02/2013
(33) Name of priority country :EPO
(86) International Application No :PCT/EP2014/052643
Filing Date :11/02/2014
(87) International Publication No :WO 2014/124935
(61) Patent of Addition to Application Number :NA
Filing Date :NA
(62) Divisional to Application Number :NA
Filing Date :NA

(71)**Name of Applicant :**
1)HF HOLDING SA
Address of Applicant :Rue du Commerce 19 B 1400 Nivelles Belgium
(72)**Name of Inventor :**
1)AWI ABALO Bolom
2)LENS Michel

(57) Abstract :
Assembly (10) for fastening a railway rail (1) comprising a lower platen (11) provided with through holes (111) for anchoring the lower platen to ground (40) by means of anchoring means (15) an upper platen (12) superposable on the lower platen for supporting the rail (1) and a pair of rail fastening clips (142) for fastening the rail to the upper platen (12). The lower and upper platens comprise a pair of corresponding first holes (112, 121) distinct from the through holes (111) for removably securing the upper platen (12) to the lower platen (11) by first fastening means (16) independent of the ground anchoring means (15). The upper platen (12) and the rail fastening clips (142) comprise a pair of corresponding second holes (122, 144) distinct from the first holes and from the through holes for securing the rail fastening clips (142) to the upper platen (12) by means of second independent fastening means (17). The first holes (121) of the upper platen (12) have oblong shape with a longer axis oriented transverse to the rail (1) so as to allow for lateral adjustment of the upper platen (12) relative to the lower platen (11).

No. of Pages : 32 No. of Claims : 15

(12) PATENT APPLICATION PUBLICATION
(21) Application No.2412/DEL/2015 A
(19) INDIA
(22) Date of filing of Application :06/08/2015
(43) Publication Date : 28/08/2015

(54) Title of the invention : PISTON ROTARY MOTION ENGINE

(51) International classification :F02B71/00
(31) Priority Document No :NA
(32) Priority Date :NA
(33) Name of priority country :NA
(86) International Application No :NA
Filing Date :NA
(87) International Publication No : NA
(61) Patent of Addition to Application Number :NA
Filing Date :NA
(62) Divisional to Application Number :NA
Filing Date :NA

(71)**Name of Applicant :**
1)DHEERAJ SHARMA
Address of Applicant :S/o Sh. Brij Lal Sharma V.P.O. Shamti Distt. & Teh. Solan (Himachal Pradesh) India Pin Code 173212 Himachal Pradesh India
(72)**Name of Inventor :**
1)DHEERAJ SHARMA

(57) Abstract :
This invention relates to a rotary motion piston engine which generates power in highly efficient manner by applying perpendicular force on cuboids shaped pistons. According to instant invention, maximum face of piston and maximum perpendicular length has been increased before the expansion of gas which is necessary for maximum torque and by which maximum pressure of gas has been converted into mechanical energy. The force on piston lies perpendicularly and rotor converts small amount of force to the rotary motion, therefore water or air can be used to convert heat energy into mechanical energy with successfully. Water injection unit also presents on the combustion chamber to inject the water into combustion chamber. Water injection unit is operated by the heat sensor.Every two power stroke during running time, one stroke is taken air or evaporating water injecting in compressed air to maintain the engine temperature.

No. of Pages : 29 No. of Claims : 10

(12) PATENT APPLICATION PUBLICATION
(21) Application No.2493/DEL/2015 A
(19) INDIA
(22) Date of filing of Application :12/08/2015
(43) Publication Date : 28/08/2015

(54) Title of the invention : OINTMENT FOR RELIEF OF BURNS

(51) International classification	:A61K9/06	(71)**Name of Applicant :**
(31) Priority Document No	:NA	**1)SINGH Sant Parkash**
(32) Priority Date	:NA	Address of Applicant :H.no-80, Phase 3B1, Mohali, Punjab
(33) Name of priority country	:NA	Delhi India
(86) International Application No	:NA	(72)**Name of Inventor :**
Filing Date	:NA	**1)SINGH Sant Parkash**
(87) International Publication No	: NA	
(61) Patent of Addition to Application Number	:NA	
Filing Date	:NA	
(62) Divisional to Application Number	:NA	
Filing Date	:NA	

(57) Abstract :
The present invention relates to novel topical base composition having a unique combination of ingredients for treatment of burns, cuts, wounds, inflammation and skin allergy. The composition comprises Sesamum Indicum, Olea Europaea, Sea Buckthorn oil, Arnebia Nobilis.

No. of Pages : 11 No. of Claims : 14

(12) PATENT APPLICATION PUBLICATION
(21) Application No.2315/DEL/2014 A
(19) INDIA
(22) Date of filing of Application :14/08/2014
(43) Publication Date : 28/08/2015

(54) Title of the invention : DIGITALIZATION OF LOST AND FOUND ITEM

(51) International classification :H04B1/66
(31) Priority Document No :NA
(32) Priority Date :NA
(33) Name of priority country :NA
(86) International Application No :NA
Filing Date :NA
(87) International Publication No : NA
(61) Patent of Addition to Application Number :NA
Filing Date :NA
(62) Divisional to Application Number :NA
Filing Date :NA

(71)**Name of Applicant :**
1)LUKSHYA MADAN
Address of Applicant :28 AGCR ENCLAVE, OPP. KARKARDDOOMA COURT, NEW DELHI Delhi India
(72)**Name of Inventor :**
1)LUKSHYA MADAN

(57) Abstract :
A method for lost and found item comprises enabling information about lost and found items to be stored at a database. The method may include multiple tagging, tracking, and storing information stored by the user for the lost or found item, multiple locations may be mapped to a plurality of time values representative of when the user traversed the multiple locations. Further in, when a lost item is found or recovered by another user, the method enables these two users to exchange textual information. The method also allows search results to be displayed on the map.

No. of Pages : 10 No. of Claims : 7

(12) PATENT APPLICATION PUBLICATION
(21) Application No.3109/DEL/2014 A
(19) INDIA
(22) Date of filing of Application :30/10/2014
(43) Publication Date : 28/08/2015

(54) Title of the invention : INSULATED BUILDING BLOCKS

(51) International classification :E04C1/41
(31) Priority Document No :NA
(32) Priority Date :NA
(33) Name of priority country :NA
(86) International Application No :NA
Filing Date :NA
(87) International Publication No : NA
(61) Patent of Addition to Application Number :NA
Filing Date :NA
(62) Divisional to Application Number :NA
Filing Date :NA

(71)**Name of Applicant :**
1)SHARMA KESHAVE PRASAD
Address of Applicant :256, RAJEEV NAGAR, BASNI JODHPUR (RAJ.) Rajasthan India
(72)**Name of Inventor :**
1)SHARMA KESHAVE PRASAD

(57) Abstract :
Keeping in view the disastrous effect of climate change; due to emissions of green house gases, and its increasing continuity; through the various human I activities along with natural instincts, to develop hrther and more, it has become essential to chequelreduce the emissions of green house gases in the 1 atmosphere, in the interest of the EARTH PLANET i.e. our HOME. I I With this view, economically, relevant, and time effective PROCESS, of manufacturing of THERMAL BUILDING BLOCKS, now, INSULATED BUILDING BLOCKS has been developedlinvented to build various types of buildings, using INSULATED BUILDING BLOCKS to construct, insulated external walls of buildings as well as to develop them as Green buildings, specially high rise residential buildings and to provide affordable cheap houseslflats to all the members of our society. And, thus, conserving scare energy, water and effective comfortable living, economically.

No. of Pages : 9 No. of Claims : 1

(12) PATENT APPLICATION PUBLICATION
(21) Application No.6599/DELNP/2015 A
(19) INDIA
(22) Date of filing of Application :27/07/2015
(43) Publication Date : 28/08/2015

(54) Title of the invention : DISPOSABLE WEARABLE ARTICLE

(51) International classification :A61F13/496
(31) Priority Document No :2014206769
(32) Priority Date :07/10/2014
(33) Name of priority country :Japan
(86) International Application No :PCT/JP2014/077861
Filing Date :20/10/2014
(87) International Publication No :WO 2015/076047
(61) Patent of Addition to Application Number :NA
Filing Date :NA
(62) Divisional to Application Number :NA
Filing Date :NA

(71)**Name of Applicant :**
1)UNICHARM CORPORATION
Address of Applicant :182 Shimobun Kinsei cho Shikokuchuo shi Ehime 7990111 Japan
(72)**Name of Inventor :**
1)KATSURAGAWA Kunihiko
2)BABA Toshimitsu
3)FUKUZAWA Masumi

(57) Abstract :
Provided is a disposable wearable article wherein a front rear waist area and a crotch area are formed from differently shaped panels. The wearable article has color applied to approximately the entire area thereof and thereby has improved design properties and can achieve an underwear like outward appearance. Color is applied to approximately the entire area of a waist panel (14) and a crotch panel (15). Among a first region (61) that is on the waist panel and that does not overlap the crotch panel when seen in plan view a second region (62) that is on the crotch panel and does not overlap the waist panel when seen in plan view and a third region (63) where the waist panel and the crotch panel overlap when seen in plan view the color difference as seen from the outside between the region that has the highest color density and the region that has the lowest color density is 0.1-10.0 when waist flexible bodies (41, 42) are in a natural contracted state.

No. of Pages : 62 No. of Claims : 11

(12) PATENT APPLICATION PUBLICATION
(21) Application No.1952/MUMNP/2015 A
(19) INDIA
(22) Date of filing of Application :20/07/2015
(43) Publication Date : 28/08/2015

(54) Title of the invention : METHODS FOR CONTROLLING THE INTER CHANNEL COHERENCE OF UPMIXED AUDIO SIGNALS

(51) International classification :G10L19/008
(31) Priority Document No :61/764,857
(32) Priority Date :14/02/2013
(33) Name of priority country :U.S.A.
(86) International Application No :PCT/US2014/012599
Filing Date :22/01/2014
(87) International Publication No :WO 2014/126689
(61) Patent of Addition to Application Number :NA
Filing Date :NA
(62) Divisional to Application Number :NA
Filing Date :NA

(71)**Name of Applicant :**
1)DOLBY LABORATORIES LICENSING CORPORATION
Address of Applicant :100 Potrero Avenue San Francisco California 94103 U.S.A.
(72)**Name of Inventor :**
1)YEN Kuan Chieh
2)MELKOTE Vinay
3)FELLERS Matthew
4)DAVIDSON Grant A.

(57) Abstract :
Audio characteristics of audio data corresponding to a plurality of audio channels may be determined. The audio characteristics may include spatial parameter data. Decorrelation filtering processes for the audio data may be based at least in part on the audio characteristics. The decorrelation filtering processes may cause a specific inter decorrelation signal coherence (IDC) between channel specific decorrelation signals for at least one pair of channels. The channel specific decorrelation signals may be received and/or determined. Inter channel coherence (ICC) between a plurality of audio channel pairs may be controlled. Controlling ICC may involve at receiving an ICC value and/or determining an ICC value based at least partially on the spatial parameter data. A set of IDC values may be based at least partially on the set of ICC values. A set of channel specific decorrelation signals corresponding with the set of IDC values may be synthesized by performing operations on the filtered audio data.

No. of Pages : 146 No. of Claims : 96

(12) PATENT APPLICATION PUBLICATION
(19) INDIA
(22) Date of filing of Application :20/07/2015
(21) Application No.1954/MUMNP/2015 A
(43) Publication Date : 28/08/2015

(54) Title of the invention : SIGNAL DECORRELATION IN AN AUDIO PROCESSING SYSTEM

(51) International classification :G10L19/008,G10L19/02,H04S5/00
(31) Priority Document No :61/764,837
(32) Priority Date :14/02/2013
(33) Name of priority country :U.S.A.
(86) International Application No :PCT/US2014/012453
Filing Date :22/01/2014
(87) International Publication No :WO 2014/126682
(61) Patent of Addition to Application Number :NA
Filing Date :NA
(62) Divisional to Application Number :NA
Filing Date :NA

(71)**Name of Applicant :**
1)DOLBY LABORATORIES LICENSING CORPORATION
Address of Applicant :100 Potrero Avenue San Francisco CA 94103 U.S.A.
(72)**Name of Inventor :**
1)MELKOTE Vinay
2)YEN Kuan Chieh
3)DAVIDSON Grant A.
4)FELLERS Matthew
5)VINTON Mark S.
6)KUMAR Vivek

(57) Abstract :
Audio processing methods may involve receiving audio data corresponding to a plurality of audio channels. The audio data may include a frequency domain representation corresponding to filterbank coefficients of an audio encoding or processing system. A decorrelation process may be performed with the same filterbank coefficients used by the audio encoding or processing system. The decorrelation process may be performed without converting coefficients of the frequency domain representation to another frequency domain or time domain representation. The decorrelation process may involve selective or signal adaptive decorrelation of specific channels and/or specific frequency bands. The decorrelation process may involve applying a decorrelation filter to a portion of the received audio data to produce filtered audio data. The decorrelation process may involve using a non hierarchal mixer to combine a direct portion of the received audio data with the filtered audio data according to spatial parameters.

No. of Pages : 132 No. of Claims : 41

(12) PATENT APPLICATION PUBLICATION
(19) INDIA
(22) Date of filing of Application :20/07/2015
(21) Application No.1955/MUMNP/2015 A
(43) Publication Date : 28/08/2015

(54) Title of the invention : AUDIO SIGNAL ENHANCEMENT USING ESTIMATED SPATIAL PARAMETERS

(51) International classification :G10L19/008,G10L19/02
(31) Priority Document No :61/764,869
(32) Priority Date :14/02/2013
(33) Name of priority country :U.S.A.
(86) International Application No :PCT/US2014/012457
Filing Date :22/01/2014
(87) International Publication No :WO 2014/126683
(61) Patent of Addition to Application Number :NA
Filing Date :NA
(62) Divisional to Application Number :NA
Filing Date :NA

(71)**Name of Applicant :**
1)DOLBY LABORATORIES LICENSING CORPORATION
Address of Applicant :100 Potrero Avenue San Francisco California 94103 U.S.A.
(72)**Name of Inventor :**
1)FELLERS Matthew
2)MELKOTE Vinay
3)YEN Kuan Chieh
4)DAVIDSON Grant A.
5)DAVIS Mark F.

(57) Abstract :
Received audio data may include a first set of frequency coefficients and a second set of frequency coefficients. Spatial parameters for at least part of the second set of frequency coefficients may be estimated based at least in part on the first set of frequency coefficients. The estimated spatial parameters may be applied to the second set of frequency coefficients to generate a modified second set of frequency coefficients. The first set of frequency coefficients may correspond to a first frequency range (for example an individual channel frequency range) and the second set of frequency coefficients may correspond to a second frequency range (for example a coupled channel frequency range). Combined frequency coefficients of a composite coupling channel may be based on frequency coefficients of two or more channels. Cross correlation coefficients between frequency coefficients of a first channel and the combined frequency coefficients may be computed.

No. of Pages : 137 No. of Claims : 64

(12) PATENT APPLICATION PUBLICATION
(21) Application No.2855/MUM/2015 A
(19) INDIA
(22) Date of filing of Application :28/07/2015
(43) Publication Date : 28/08/2015

(54) Title of the invention : PUBLIC ADDRESS SYSTEM (PAS-A 100 SYSTEM) FOR MASS TRANSPORT PASSENGER VEHICLES

(51) International classification	:B61C11/06, B61B13/00, B61B5/02
(31) Priority Document No	:NA
(32) Priority Date	:NA
(33) Name of priority country	:NA
(86) International Application No	:NA
Filing Date	:NA
(87) International Publication No	: NA
(61) Patent of Addition to Application Number	:NA
Filing Date	:NA
(62) Divisional to Application Number	:NA
Filing Date	:NA

(71)**Name of Applicant :**
1)MOHAN V KAMAT
Address of Applicant :466, FARMAC HOUSE, 14TH ROAD, CHEMBUR, MUMBAI-400071. Maharashtra India
2)RAJESH S. KUNDER
3)ANIL M. KAMAT
4)SUDHA M. KAMAT PARTNERS TRADING AS M/S. MG GREY ENGINE LLP
(72)**Name of Inventor :**
1)RAJESH S. KUNDER

(57) Abstract :
The invention comprises amongst other of microphone fixed to the protuberance on the enclosure via fixing screw, protuberance for the mic, auxiliary input, auxiliary output, main electronic circuit mounted on a base plate, digital audio processor circuit, microprocessor circuit, power supply circuit, amplifier, power supply cable, power source, enclosure fixed to the base plate using the mounting holes, membrane key pad mounted on enclosure comprising of +/- keys, mic keys, cable connecting goose neck mic to the electronic circuit, auxiliary input cable, right hand side speaker cable, left hand side speaker cable, base plate, mounting holes, mounting screw, such that when the driver of the vehicle wants to communicate to the passengers, mic button is pressed by him, leading to capturing of the verbatim audio from the driver by the microphone, causing amplification of the signal by digital audio processor circuit and toggling of the digital audio processor circuit between microphone and auxiliary input so that amplified audio signal is processed by the microprocessor circuit and fed to the audio speaker via cables and when the driver doesnt want to talk to the passenger the mic button is decompressed causing the output of the public address system toggle to the auxiliary output.

No. of Pages : 13 No. of Claims : 5

(12) PATENT APPLICATION PUBLICATION
(21) Application No.3089/MUM/2015 A
(19) INDIA
(22) Date of filing of Application :14/08/2015
(43) Publication Date : 28/08/2015

(54) Title of the invention : SYSTEM AND METHOD FOR MANAGING UNLAWFUL PARKING OF VEHICLES

(51) International classification :G08G1/017
(31) Priority Document No :NA
(32) Priority Date :NA
(33) Name of priority country :NA
(86) International Application No :NA
Filing Date :NA
(87) International Publication No : NA
(61) Patent of Addition to Application Number :NA
Filing Date :NA
(62) Divisional to Application Number :NA
Filing Date :NA

(71)**Name of Applicant :**
1)VISHAL PRABHULAL JOGI
Address of Applicant :A601, SERENITY CHS LTD, POONAM GARDEN, OFF. MIRA-BHAYANDER ROAD, MIRA ROAD (EAST) - 4011017, MAHARASHTRA, INDIA. Maharashtra India
(72)**Name of Inventor :**
1)VISHAL PRABHULAL JOGI

(57) Abstract :
A system 100 for managing unlawful parking of vehicles 106 is provided. The system includes a lock rack unit 104 capable of dispensing at least one electronic lock 104A upon valid authorization of a user 102. The user 102 locks the vehicle 106 upon access to the electronic lock 104A. The system also includes a portable handheld device 108 operated by the user 102 to acquire data like GPS co-ordinates of the locked vehicle 106 and the vehicle 106 and the user 102 data. The portable handheld device 108 is capable of sending at least one acquired data to a remote server 112 through a network 110. Further, the system includes a receiver unit 114 which is connected to a computer readable medium 408 and is capable of receiving acquired data from the portable handheld device 108. The receiver unit 114 authorizes and broadcast access code to unlock the electronic lock 104A upon receipt of payment from vehicle owner 106A.

No. of Pages : 36 No. of Claims : 16

(12) PATENT APPLICATION PUBLICATION
(21) Application No.3123/MUM/2015 A
(19) INDIA
(22) Date of filing of Application :17/08/2015
(43) Publication Date : 28/08/2015

(54) Title of the invention : DEVICE FOR DETECTING GLAUCOMA

(51) International classification	:A61B3/032	(71)**Name of Applicant :**
(31) Priority Document No	:NA	**1)Abhaykumar Kuthe**
(32) Priority Date	:NA	Address of Applicant :Visvesvaraya National Institute of Technology, South Ambazari Road, Nagpur 440 010, Maharashtra. Maharashtra India
(33) Name of priority country	:NA	
(86) International Application No	:NA	
Filing Date	:NA	**2)Mahesh B Mawale**
(87) International Publication No	: NA	(72)**Name of Inventor :**
(61) Patent of Addition to Application Number	:NA	**1)Abhaykumar Kuthe**
Filing Date	:NA	**2)Mahesh B Mawale**
(62) Divisional to Application Number	:NA	
Filing Date	:NA	

(57) Abstract :
ABSTRACT The present invention relates to anise to provide systems and methods for a device for the detection of the glaucoma by the screening based on applanation and indentation principles. Glaucoma is a disease mainly concerned with the damages of optic nerve which further results into the vision loss of a human eye. In early detection of glaucoma the increase in intraocular pressure (IOP) is the only risk factor, so accurate measurement of IOP become important in case of glaucoma. The methods and the devices those are used for the measurement of IOP are complex, needs expertise in the field and causing discomfort to the patient during measurement of IOP. The objective of developing a device is to find out directly the level of glaucoma in patient™s eye instead of measuring the IOP. The device is simple and it can be used comfortably by putting its plunger on patient™s eye with a closed eyelid. Following invention is described in detail with the help of Figure 1 of sheet 1 shows diagram for an isometric view of device for detecting glaucoma, Figure 2 of sheet 2 shows the sectional view of device for detecting glaucoma, Figure 3 of sheet 2 shows the complete plunger, Figure 4 of sheet 3shows the displacement cylinder, Figure 5 of sheet 3 shows the outer cylinder and Figure 6 of sheet 4 shows the compression spring.

No. of Pages : 22 No. of Claims : 6

(12) PATENT APPLICATION PUBLICATION
(19) INDIA
(22) Date of filing of Application :12/08/2014
(21) Application No.2594/MUM/2014 A
(43) Publication Date : 28/08/2015

(54) Title of the invention : METHODS FOR PREPARATION OF WATER-SOLUBLE AND WATER-INSOLUBLE DERIVATIVES OF SACCHARIDES AND ALKALI, ALKALINE EARTH, TRANSITION AND NOBEL METALS.

(51) International classification	:C08B 37/00, C08B 31/00
(31) Priority Document No	:NA
(32) Priority Date	:NA
(33) Name of priority country	:NA
(86) International Application No	:NA
Filing Date	:NA
(87) International Publication No	: NA
(61) Patent of Addition to Application Number	:NA
Filing Date	:NA
(62) Divisional to Application Number	:NA
Filing Date	:NA

(71)**Name of Applicant :**
1)DANDEKAR JAIN PRAJAKTA
Address of Applicant :DEPARTMENT OF PHARMACEUTICAL SCIENCES AND TECHNOLOGY, INSTITUTE OF CHEMICAL TECHNOLOGY (DEEMED UNIVERSITY), NATHALAL PAREKH MARG, MATUNGA (E), MUMBAI 400 019, INDIA. Maharashtra India
(72)**Name of Inventor :**
1)YADAV VIJAY DUKHRAN
2)DANDEKAR JAIN PRAJAKTA
3)JAIN RATNESH

(57) Abstract :
This invention describes a novel synthesis route for novel water-soluble and water-insoluble metal-saccharide derivatives, formulated using alkali metals, alkaline earth metals, heavy metals (transition and noble metals). Metal-saccharides were synthesized using monosaccharides (like but not limited to (C3-C6) sugars like glycerol, erythrose, ribose, ribulose, sorbose, xylose, arabinose glucose, fructose, hydroxyl methyl furfural, gluconic acid, saccharic acid), disaccharides (like but not limited to sucrose, lactose, maltose, galactose), polysaccharides (like but not limited to starch, malt dextrin, low molecular weight/high molecular weight chitosan, cellulose) and alkali, alkaline, transition (heavy and noble) metal salts (like but not limited to chlorides, sulphates, nitrates, phosphates, carbonates, acetates) as reactant. As compared to the current synthesis routes, our synthesis route and process possess benefits of being a greener approach due to the involvement of non-hazardous solvents, non-hazardous reactants, lower temperatures and being eco-friendly and sustainable. The synthesis process followed herein may be used for production of fine chemicals for use in pharmaceutical and biomedical applications.

No. of Pages : 8 No. of Claims : 23

(12) PATENT APPLICATION PUBLICATION
(21) Application No.3106/MUM/2015 A
(19) INDIA
(22) Date of filing of Application :17/08/2015
(43) Publication Date : 28/08/2015

(54) Title of the invention : INTEGRATED WIRELESS ONLINE OIL CONDITION AND OIL LEVEL MONITORING SYSTEM FOR I C ENGINE.

(51) International classification	:G06F19/00,G08G1/052, F01M11/10
(31) Priority Document No	:NA
(32) Priority Date	:NA
(33) Name of priority country	:NA
(86) International Application No	:NA
Filing Date	:NA
(87) International Publication No	: NA
(61) Patent of Addition to Application Number	:NA
Filing Date	:NA
(62) Divisional to Application Number	:NA
Filing Date	:NA

(71)**Name of Applicant :**
1)MR. VIKRANT ULHAS GARUD
Address of Applicant :PIMPRI CHINCHWAD COLLEGE OF ENGINEERING, SECTOR NO.26, PRADHIKARAN NIGDI, PUNE-411044, MAHARASHTRA, INDIA. Maharashtra India
(72)**Name of Inventor :**
1)MR. VIKRANT ULHAS GARUD

(57) Abstract :
The deterioration rate of Lubricating oil in internal combustion engines is strongly depends on the blow by gases, the fuel quality, the ambient conditions and engine parameters like speed, distance travelled Engine temperature etc. In order to avoid an engines thermal fatigue failure, the oil must be changed in regular intervals i.e. before it loses its protective properties like Viscosity, Total acidic number and total base number, soot concentration and water content etc. At the same time, an unnecessary oil change should be avoided for environmental and economical reasons as still active additives left in the oil may react with the environment and may cause harmful effects. Also in our experimental study, we have tested above said properties of oil after every 1000 km distance travelled and it is proved that engines lubricating oil losing its protective properties before completion of 3000 km which is reference set by oil manufacturer as oil changed interval. Today, in automotive applications, condition of the engine oil is monitored indirectly by measuring engines operating parameters and they do not physically measure the condition of lubricating oil in the crankcase. The same system cant tell if the oil is contaminated with coolant or soot, if additive packages are depleted and if it is low. Currently proposed wireless system uses Bluetooth technology which integrates oil condition and its level monitoring which uses temperature sensor, ultrasonic sensor and both the sensors are integrating with oil filling cap. Both the Sensor integrated with oil filling cap is put up in the engine crankcase. Programmable coding language will be developing for effectively analyzing the signals from sensors like oil level in engine crankcase and oil temperature to evaluate oils viscosity, soot concentration etc. and when different oil properties reaches its deterioration level or oil level falls below optimum level; corresponding indicator will indicates that the oil needs to be replace or fill.

No. of Pages : 11 No. of Claims : 3

(12) PATENT APPLICATION PUBLICATION
(21) Application No.1765/MUMNP/2015 A
(19) INDIA
(22) Date of filing of Application :02/07/2015
(43) Publication Date : 28/08/2015

(54) Title of the invention : AUDIO ENCODER AND DECODER WITH PROGRAM INFORMATION OR SUBSTREAM STRUCTURE METADATA

(51) International classification :G10L19/00
(31) Priority Document No :61/836,865
(32) Priority Date :19/06/2013
(33) Name of priority country :U.S.A.
(86) International Application No :PCT/US2014/042168
Filing Date :12/06/2014
(87) International Publication No :WO 2014/204783
(61) Patent of Addition to Application Number :NA
Filing Date :NA
(62) Divisional to Application Number :NA
Filing Date :NA

(71)**Name of Applicant :**
1)DOLBY LABORATORIES LICENSING CORPORATION
Address of Applicant :100 Potrero Avenue San Francisco California 94103 4813 U.S.A.
(72)**Name of Inventor :**
1)RIEDMILLER Jeffrey
2)WARD Michael

(57) Abstract :
Apparatus and methods for generating an encoded audio bitstream including by including substream structure metadata (SSM) and/or program information metadata (PIM) and audio data in the bitstream. Other aspects are apparatus and methods for decoding such a bitstream and an audio processing unit (e.g. an encoder decoder or post processor) configured (e.g. programmed) to perform any embodiment of the method or which includes a buffer memory which stores at least one frame of an audio bitstream generated in accordance with any embodiment of the method.

No. of Pages : 80 No. of Claims : 22

(12) PATENT APPLICATION PUBLICATION
(21) Application No.1766/MUMNP/2015 A
(19) INDIA
(22) Date of filing of Application :02/07/2015
(43) Publication Date : 28/08/2015

(54) Title of the invention : SYSTEM AND METHOD FOR OPTIMIZING LOUDNESS AND DYNAMIC RANGE ACROSS DIFFERENT PLAYBACK DEVICES

(51) International classification :H03G9/00
(31) Priority Document No :61/754,882
(32) Priority Date :21/01/2013
(33) Name of priority country :U.S.A.
(86) International Application No :PCT/US2014/011681
Filing Date :15/01/2014
(87) International Publication No :WO 2014/113471
(61) Patent of Addition to Application Number :NA
Filing Date :NA
(62) Divisional to Application Number :NA
Filing Date :NA

(71)**Name of Applicant :**
1)DOLBY LABORATORIES LICENSING CORPORATION
Address of Applicant :100 Potrero Avenue San Francisco California 94103 U.S.A.
2)DOLBY INTERNATIONAL AB
(72)**Name of Inventor :**
1)RIEDMILLER Jeffrey
2)NORCROSS Scott Gregory
3)ROEDEN Karl Jonas

(57) Abstract :
Embodiments are directed to a method and system for receiving in a bitstream metadata associated with the audio data and analyzing the metadata to determine whether a loudness parameter for a first group of audio playback devices are available in the bitstream. Responsive to determining that the parameters are present for the first group the system uses the parameters and audio data to render audio. Responsive to determining that the loudness parameters are not present for the first group the system analyzes one or more characteristics of the first group and determines the parameter based on the one or more characteristics.

No. of Pages : 56 No. of Claims : 25

(12) PATENT APPLICATION PUBLICATION
(21) Application No.448/MUM/2015 A
(19) INDIA
(22) Date of filing of Application :11/02/2015
(43) Publication Date : 28/08/2015

(54) Title of the invention : MULTIFUNCTIONAL RAILWAY TRACK SCAVENGING VEHICLE

(51) International classification	:E01B 27/00, E01B 5/00
(31) Priority Document No	:NA
(32) Priority Date	:NA
(33) Name of priority country	:NA
(86) International Application No	:NA
Filing Date	:NA
(87) International Publication No	: NA
(61) Patent of Addition to Application Number	:NA
Filing Date	:NA
(62) Divisional to Application Number	:NA
Filing Date	:NA

(71)**Name of Applicant :**
1)DR. S.K. PRADHAN
Address of Applicant :H.NO - 01, SURUCHI NAGAR KOTRA ROAD, BHOPAL - 462003 Madhya Pradesh India
(72)**Name of Inventor :**
1)DR. S.K. PRADHAN
2)RAJVARDHAN JAIDEVA
3)MUKESH BAGARIA
4)KULDEEP KUMAR

(57) Abstract :
A railway track scavenging system mounted on a trolley frame and comprising track rail cleaning air and water nozzles, suction pipes, bristles; water storage tank, disposal tank, control panel, motor and safety tools. The railway track scavenging system is so designed that it can clean up dry waste as well as wet garbage and debris. The disposal storage tank is also mounted on trolley frame as an integral part of the railway track scavenging system so that debris collected from railway tracks can be stored and off loaded at a suitable place. The railway track scavenging system is highly automated and easy to operate.

No. of Pages : 20 No. of Claims : 9

(12) PATENT APPLICATION PUBLICATION
(21) Application No.1874/MUMNP/2015 A
(19) INDIA
(22) Date of filing of Application :13/07/2015
(43) Publication Date : 28/08/2015

(54) Title of the invention : MODEL BASED PREDICTION IN A CRITICALLY SAMPLED FILTERBANK

(51) International classification :G10L19/093
(31) Priority Document No :61/750,052
(32) Priority Date :08/01/2013
(33) Name of priority country :U.S.A.
(86) International Application No :PCT/EP2014/050139
Filing Date :07/01/2014
(87) International Publication No :WO 2014/108393
(61) Patent of Addition to Application Number :NA
Filing Date :NA
(62) Divisional to Application Number :NA
Filing Date :NA

(71)**Name of Applicant :**
1)DOLBY INTERNATIONAL AB
Address of Applicant :Apollo Building 3E Herikerbergweg 1 35 NL 1101 CN Amsterdam Zuidoost Netherlands
(72)**Name of Inventor :**
1)VILLEMOES Lars

(57) Abstract :
The present document relates to audio source coding systems. In particular the present document relates to audio source coding systems which make use of linear prediction in combination with a filterbank. A method for estimating a first sample (615) of a first subband signal in a first subband of an audio signal is described. The first subband signal of the audio signal is determined using an analysis filterbank (612) comprising a plurality of analysis filters which provide a plurality of subband signals in a plurality of subbands from the audio signal respectively. The method comprises determining a model parameter (613) of a signal model;determining a prediction coefficient to be applied to a previous sample (614) of a first decoded subband signals derived from the first subband signal based on the signal model based on the model parameter (613) and based on the analysis filterbank (612); wherein a time slot of the previous sample (614) is prior to a time slot of the first sample (615); and determining an estimate of the first sample (615) by applying the prediction coefficient to the previous sample (614).

No. of Pages : 50 No. of Claims : 34

(12) PATENT APPLICATION PUBLICATION
(21) Application No.3170/MUM/2015 A
(19) INDIA
(22) Date of filing of Application :20/08/2015
(43) Publication Date : 28/08/2015

(54) Title of the invention : SYSTEM FOR CARRYING AND DISTRIBUTING MULTIPLE I/O SIGNALS THROUGH CONTROLLER BY REDUCING CABLE HARNESSING

(51) International classification	:G05B 19/00
(31) Priority Document No	:NA
(32) Priority Date	:NA
(33) Name of priority country	:NA
(86) International Application No	:NA
Filing Date	:NA
(87) International Publication No	: NA
(61) Patent of Addition to Application Number	:NA
Filing Date	:NA
(62) Divisional to Application Number	:NA
Filing Date	:NA

(71)**Name of Applicant :**
1)Katlax Enterprises Pvt. Ltd.
Address of Applicant :117-119, Santej - Vadsar Road, Kalol, Gandhinagar - 382 721 Gujarat, India Gujarat India
(72)**Name of Inventor :**
1)Hernwal Rajesh Kumar Umedsingh
2)Lokhande Vijay Prakash

(57) Abstract :
The present invention relates to a system (1) for carrying and distributing multiple I/O signals through the controller for reducing cable harnessing that provides End to End solution in industrial automation. Said system (1) comprises a hub (2) in which circuit board (3) is disposed. Said circuit board (3) comprises a plurality of contact holes (H) whereby wire assembly of conductor cable or distributed channels (4) is electrically connected for carrying signal from input devices (sensor) and distributing signals to the corresponding output devices (actuator) through the controller. Said circuit board (3) is configured to reduce the number of wires that carry the power signal of multiple I/O devices. The trunk line (5) is adapted that is connected with I/O modules of controller to carry the multiple signals of I/O devices without performing individual wiring with controller.

No. of Pages : 20 No. of Claims : 7

(12) PATENT APPLICATION PUBLICATION
(21) Application No.1790/MUMNP/2015 A
(19) INDIA
(22) Date of filing of Application :06/07/2015
(43) Publication Date : 28/08/2015

(54) Title of the invention : RENDERING OF AUDIO OBJECTS WITH APPARENT SIZE TO ARBITRARY LOUDSPEAKER LAYOUTS

(51) International classification :H04S3/00
(31) Priority Document No :P201330461
(32) Priority Date :28/03/2013
(33) Name of priority country :Spain
(86) International Application No :PCT/US2014/022793
Filing Date :10/03/2014
(87) International Publication No :WO 2014/159272
(61) Patent of Addition to Application Number :NA
Filing Date :NA
(62) Divisional to Application Number :NA
Filing Date :NA

(71)**Name of Applicant :**
1)DOLBY LABORATORIES LICENSING CORPORATION
Address of Applicant :100 Potrero Avenue San Francisco California 94103 4813 U.S.A.
2)DOLBY INTERNATIONAL AB
(72)**Name of Inventor :**
1)MATEOS SOLE Antonio
2)TSINGOS Nicolas R.

(57) Abstract :
Multiple virtual source locations may be defined for a volume within which audio objects can move. A set up process for rendering audio data may involve receiving reproduction speaker location data and pre computing gain values for each of the virtual sources according to the reproduction speaker location data and each virtual source location. The gain values may be stored and used during run time during which audio reproduction data are rendered for the speakers of the reproduction environment. During run time for each audio object contributions from virtual source locations within an area or volume defined by the audio object position data and the audio object size data may be computed. A set of gain values for each output channel of the reproduction environment may be computed based at least in part on the computed contributions. Each output channel may correspond to at least one reproduction speaker of the reproduction environment.

No. of Pages : 52 No. of Claims : 46

(12) PATENT APPLICATION PUBLICATION
(19) INDIA
(22) Date of filing of Application :23/06/2015
(21) Application No.1633/MUMNP/2015 A
(43) Publication Date : 28/08/2015

(54) Title of the invention : METADATA TRANSCODING

(51) International classification :H04H60/73,G10L19/16,H04N21/84
(31) Priority Document No :61/754,893
(32) Priority Date :21/01/2013
(33) Name of priority country :U.S.A.
(86) International Application No :PCT/US2014/011695
Filing Date :15/01/2014
(87) International Publication No :WO 2014/113478
(61) Patent of Addition to Application Number :NA
Filing Date :NA
(62) Divisional to Application Number :NA
Filing Date :NA

(71)**Name of Applicant :**
1)DOLBY LABORATORIES LICENSING CORPORATION
Address of Applicant :100 Potrero Avenue San Francisco California 94103 4813 U.S.A. U.S.A.
2)DOLBY INTERNATIONAL AB
(72)**Name of Inventor :**
1)SCHNEIDER Andreas
2)FERSCH Christof
3)WOLTERS Martin
4)RIEDMILLER Jeffrey
5)NORCROSS Scott Gregory
6)GRANT Michael

(57) Abstract :
The present document relates to transcoding of metadata and in particular to a method and system for transcoding metadata with reduced computational complexity. A transcoder configured to transcode an inbound bitstream comprising an inbound content frame and an associated inbound metadata frame into an outbound bitstream comprising an outbound content frame and an associated outbound metadata frame is described. The inbound content frame is indicative of a signal encoded according to a first codec system and the outbound content frame is indicative of the signal encoded according to a second codec system. The transcoder is configured to identify an inbound block of metadata from the inbound metadata frame the inbound block of metadata associated with an inbound descriptor indicative of one or more properties of metadata comprised within the inbound block of metadata and to generate the outbound metadata frame from the inbound metadata frame based on the inbound descriptor.

No. of Pages : 79 No. of Claims : 62

(12) PATENT APPLICATION PUBLICATION
(21) Application No.3023/MUM/2015 A
(19) INDIA
(22) Date of filing of Application :10/08/2015
(43) Publication Date : 28/08/2015

(54) Title of the invention : A CONTINUOUS PROCESS OF SIMULATION OF THE INDUSTRIAL PROCESS OF HEAT HARDENING OF THE PELLETS OF THE ORES AND EQUIPMENT THEREFOR

(51) International classification	:C22B 1/14, C22B 1/24
(31) Priority Document No	:NA
(32) Priority Date	:NA
(33) Name of priority country	:NA
(86) International Application No	:NA
Filing Date	:NA
(87) International Publication No	: NA
(61) Patent of Addition to Application Number	:NA
Filing Date	:NA
(62) Divisional to Application Number	:NA
Filing Date	:NA

(71)**Name of Applicant :**
1)SOUMITRA SUDHAKAR KOTHARI
Address of Applicant :C-23, MIDC, HINGNA INDUSTRIAL ESTATE, NAGPUR-440028, MAHARASHTRA, INDIA Maharashtra India
(72)**Name of Inventor :**
1)SOUMITRA SUDHAKAR KOTHARI

(57) Abstract :
A continuous process of simulation of the industrial process of heat hardening of the pellets of the ores and equipment there for comprising: a common oil or gas station for supply of fuel to the common oil or gas train which in turn supply the fuel to the oil or gas trains of the burners of the down draft heating furnace and hot gas generator respectively; a combustion air fan for supply of combustion air to the burner of the down draft heating furnace through combustion air train; a combustion air fan for supply of combustion air to the burner of the hot gas generator through combustion air train; a down draft heating furnace dully refractory lined fitted with a burner, spark plug with ignition transformer for firing the ignition fuel mixed with combustion air, flame failure protection device, thermocouple for indication, recording and controlling the process temperature and fitted with flange for connecting it to the top chamber; a hot gas generator dully refractory lined fitted with a burner, spark plug with ignition transformer for firing the ignition fuel mixed with combustion air, flame failure protection device, thermocouple for indication, recording and controlling the temperature of the process temperatures and fitted with flanges for connecting it to the pipe line receiving dilution air and to the pipe line delivering the hot gas for up draft heating respectively

No. of Pages : 27 No. of Claims : 8

(12) PATENT APPLICATION PUBLICATION
(21) Application No.3947/CHE/2015 A
(19) INDIA
(22) Date of filing of Application :31/07/2015
(43) Publication Date : 28/08/2015

(54) Title of the invention : DESIGN OF AN ALPHA-BETA DOUBLE PISTON HYBRID STIRLING ENGINE

(51) International classification :F02G
(31) Priority Document No :NA
(32) Priority Date :NA
(33) Name of priority country :NA
(86) International Application No :NA
Filing Date :NA
(87) International Publication No : NA
(61) Patent of Addition to Application Number :NA
Filing Date :NA
(62) Divisional to Application Number :NA
Filing Date :NA

(71)**Name of Applicant :**
1)SAKTHI KUMAR ARUL PRAKASH
Address of Applicant :315/100, VIVEKANANDHA STREET, M.G.ROAD, NEW FAIRLANDS, SALEM - 636 016, Tamil Nadu India
(72)**Name of Inventor :**
1)SAKTHI KUMAR ARUL PRAKASH
2)CALVIN ANTONY ANBARASU

(57) Abstract :
In this patent we disclosed the design details of a unique alpha-beta double piston hybrid Stirling Engine for enhancing the power output of the existing Stirling engines for the wide industrial applications. A laboratory model has been designed, manufactured and conducted in-house test to prove the ameliorated- efficiency of our proposed hybrid Stirling engine. In this design the existing alpha engine is kinematically linked with a piston cylinder arrangement, which works quite like a beta engine. The piston of the new cylinder is so designed that it replicates a glued displacer and power piston as similar to, that of a traditional beta engine. We observed that the alpha-beta double piston hybrid Stirling,Engine could produce 25 % increase in- power compare to a conventional alpha Stirling engine. This working model, is a pointer towards for the design and development of an alpha-beta double piston hybrid Stirling Engine for industrial applications enabling for producing electricity from the heat- producing exhaust gases.

No. of Pages : 27 No. of Claims : 8

(12) PATENT APPLICATION PUBLICATION
(21) Application No.3948/CHE/2015 A
(19) INDIA
(22) Date of filing of Application :31/07/2015
(43) Publication Date : 28/08/2015

(54) Title of the invention : MULTI-PURPOSE BOTTLE CUM SNACK BOX

(51) International classification :B65D
(31) Priority Document No :NA
(32) Priority Date :NA
(33) Name of priority country :NA
(86) International Application No :NA
Filing Date :NA
(87) International Publication No : NA
(61) Patent of Addition to Application Number :NA
Filing Date :NA
(62) Divisional to Application Number :NA
Filing Date :NA

(71)**Name of Applicant :**
1)SAKTHI KUMAR ARUL PRAKASH
Address of Applicant :315/100, VIVEKANANDHA STREET, M.G.ROAD, NEW FAIRLANDS, SALEM - 636 016, Tamil Nadu India
(72)**Name of Inventor :**
1)SAKTHI KUMAR ARUL PRAKASH

(57) Abstract :
In this patent two-lucrative designs of a paediatric kit featuring multi-purpose bottle cum snack box is.presented. This patent discloses the ergonomic design details of a unique kit (model, 1) which consists of four independent compartments with hermetically sealed dividers. The second model (model 2) consists of four compartments which are separately buckled to a central sliding, frame with a master lock. The box has. the advantages, of high compressive strength and can effectively prevent fluid leakage. It has an-attractive handle to open the skin, as, well as close it. It can be kept stable vertically and horizontally and in any angle about the horizontal as well. This is possible due to the innovative and unique design of the caps, handles.and the bases of the bottle. Additionally, the box is also characterized by simple structure design, high durability, easy to. open-and close and low production cost. This-kit assures more life and less maintenance. The invented multi-purpose bottle eum snack box is applicable to lucrative mass-production with both permanent and detachable compartments with and without thermal coating-for all seasons globally for meeting the needs of all age group:people. It is. economical because four kinds of fluids can be stored in-a single bottle. Through this, mothers can give their school going children healthy and nutritious diet. It caa be used to store tablets when it comes, to office going people or any other food items-they wish to have. The savings of 4 water bottlesand a snack box, all in one.

No. of Pages : 19 No. of Claims : 10

(12) PATENT APPLICATION PUBLICATION
(21) Application No.4050/CHE/2015 A
(19) INDIA
(22) Date of filing of Application :04/08/2015
(43) Publication Date : 28/08/2015

(54) Title of the invention : REVERSIBLY PHOTOLOCKABLE AZOBENZENE DERIVATIVES

(51) International classification :C09B
(31) Priority Document No :NA
(32) Priority Date :NA
(33) Name of priority country :NA
(86) International Application No :NA
Filing Date :NA
(87) International Publication No : NA
(61) Patent of Addition to Application Number :NA
Filing Date :NA
(62) Divisional to Application Number :NA
Filing Date :NA

(71)**Name of Applicant :**
1)BMS College Of Engineering
Address of Applicant :BMS College Of Engineering, Bull Temple Road, Basavangudi, Bangalore-560019, Karnataka, India. Karnataka India
(72)**Name of Inventor :**
1)Dr.Gurumurthy Hegde

(57) Abstract :
The invention provides a method for obtaining reversibly photolockable azobenzene derivatives. The method includes selecting a precursor molecule, diazotising the selected precursor molecule, coupling the diazotised precursor with an organic compound in presence of sodium hydroxide to obtain a para substitutable azobenzene compound, reacting the para substitutable azobenzene compound with 1-pentene to obtain an intermediate compound and reacting the intermediate compound with 4-substituted phenol to obtain a para substituted azobenzene derivatives.

No. of Pages : 15 No. of Claims : 9

(12) PATENT APPLICATION PUBLICATION
(21) Application No.3435/CHE/2015 A
(19) INDIA
(22) Date of filing of Application :06/07/2015
(43) Publication Date : 28/08/2015

(54) Title of the invention : METHOD OF POSITIONING OF SOLAR MODULE PANELS IN CONSONANCE WITH MOVEMENT OF THE SUN

(51) International classification :F24J
(31) Priority Document No :NA
(32) Priority Date :NA
(33) Name of priority country :NA
(86) International Application No :NA
Filing Date :NA
(87) International Publication No : NA
(61) Patent of Addition to Application Number :NA
Filing Date :NA
(62) Divisional to Application Number :NA
Filing Date :NA

(71)**Name of Applicant :**
1)TAVVALA ANANTHA KRISHNA KUMAR
Address of Applicant :PLOT NO. 762, 1ST FLOOR, CHITTARAMMA ROAD, V.V.NAGAR COLONY, KUKATPALLY, HYDERABAD - 500 072, Telangana India
(72)**Name of Inventor :**
1)TAVVALA ANANTHA KRISHNA KUMAR

(57) Abstract :
A system for positioning the solar module arrays in consonance with suns movement in the vertical and azimuth paths. The system comprise of a vertical and a horizontal tilting arrangements, operated from a central location by means of a vertical and a horizontal tilting controls. The current system will simultaneously adjust the position of multiple solar arrays in a solar power production unit thereby maintains the perpendicularity between solar rays and the solar array surface.

No. of Pages : 20 No. of Claims : 10

(12) PATENT APPLICATION PUBLICATION
(21) Application No.4154/CHE/2015 A
(19) INDIA
(22) Date of filing of Application :10/08/2015
(43) Publication Date : 28/08/2015

(54) Title of the invention : AUTOMATED ELECTRIC RICE MAKER WITH MULTIPLE COMPARTMENTS CONFIGURED TO PERFORM VARIOUS STAGES OF MAKING RICE

(51) International classification :A47J
(31) Priority Document No :NA
(32) Priority Date :NA
(33) Name of priority country :NA
(86) International Application No :NA
Filing Date :NA
(87) International Publication No : NA
(61) Patent of Addition to Application Number :3977/CHE/2014
Filed on :01/01/1900
(62) Divisional to Application Number :NA
Filing Date :NA

(71)**Name of Applicant :**
1)VEERA KANAKA GOURI KRISHNA TEJA ANASURI
Address of Applicant :H No 6-3/4, Plot No 4, Prashanth Nagar, Miyapur, Hyderabad-500049, Telangana, India. Telangana India
(72)**Name of Inventor :**
1)VEERA KANAKA GOURI KRISHNA TEJA ANASURI

(57) Abstract :
Exemplary embodiments are directed towards an automated electric rice maker. The automated electric rice maker comprising an electronic circuit box 149 comprising a wireless module connected to internet, whereby the wireless module configured to be remotely operated using a hand held unit of a user for enabling and disabling a power supply.

No. of Pages : 33 No. of Claims : 1

(12) PATENT APPLICATION PUBLICATION
(21) Application No.3702/CHE/2015 A
(19) INDIA
(22) Date of filing of Application :19/07/2015
(43) Publication Date : 28/08/2015

(54) Title of the invention : NON ELECTRIC PORTABLE CLOTHES CLEANING MACHINE

(51) International classification :D06F
(31) Priority Document No :NA
(32) Priority Date :NA
(33) Name of priority country :NA
(86) International Application No :NA
Filing Date :NA
(87) International Publication No : NA
(61) Patent of Addition to Application Number :NA
Filing Date :NA
(62) Divisional to Application Number :NA
Filing Date :NA

(71)**Name of Applicant :**
1)Dr.S.Ramani
Address of Applicant :1/S2, Thendral Apartments, 3rd seaward Road, Valmiki Nagar, Thiruvanmiyur, Chennai 600 041, Tamil Nadu Tamil Nadu India
(72)**Name of Inventor :**
1)Dr.S.Ramani

(57) Abstract :
The present invention discloses a Non electric portable clothes cleaning machine for cleaning of clothes. The present invention discloses a manually operated washing device comprises a cylindrical drum, one or more movable plungers, a lid, a provision for inlet water; a provision for outlet water, a mechanism to operate said movable plungers. The said plungers consists of a handle, a flexible bell shaped member that provides the plunging mechanism. The present inventions has provision for one or more plungers particularly, two plungers operating in tandem is a unique feature to the hand operated washing machine, which serves to save time of washing. Operations are also provided for rinse and drying of clothes in the said cleaning machine of the present invention.

No. of Pages : 12 No. of Claims : 8

(12) PATENT APPLICATION PUBLICATION
(21) Application No.4273/CHE/2015 A
(19) INDIA
(22) Date of filing of Application :14/08/2015
(43) Publication Date : 28/08/2015

(54) Title of the invention : A COMPOSITE POLYPECTOMY DEVICE COMPRISING AN ENDOLOOP APPLICATOR AND A FORCEPS

(51) International classification :A61B
(31) Priority Document No :NA
(32) Priority Date :NA
(33) Name of priority country :NA
(86) International Application No :NA
Filing Date :NA
(87) International Publication No : NA
(61) Patent of Addition to Application Number :1828/CHE/2015
Filed on :01/01/1900
(62) Divisional to Application Number :NA
Filing Date :NA

(71)**Name of Applicant :**
1)YALAKA RAMI REDDY
Address of Applicant :C/o Sree Reddy Bhaskar Reddy, H. No. 8-2-293/82/W/82, Road No. 7, Womens Cooperative Society, Jubilee Hills, Hyderabad-500023, Telangana, India. Telangana India
(72)**Name of Inventor :**
1)YALAKA RAMI REDDY

(57) Abstract :
Exemplary embodiments of the present disclosure are directed towards a composite polypectomy device 100 comprising a longitudinal tubular flexible body 103, wherein the longitudinal tubular flexible body 103 comprises of a first conduit 106 and a second conduit 107, wherein the first conduit 106 is hollow and configured to partly enclose an endoloop applicator 101 and the second conduit 107 is hollow and configured to partly enclose a forceps 102. This device is coaxially slidable within a channel of an endoscopic device 502 and the dimensions of the device are such that it can be accommodated and operated with ease through any channel of the endoscopic device 502. The composite polypectomy device 100 makes the process of snaring the polyps easier rendering the polypectomy procedure more efficient.

No. of Pages : 19 No. of Claims : 11

(12) PATENT APPLICATION PUBLICATION
(21) Application No.4070/CHE/2015 A
(19) INDIA
(22) Date of filing of Application :05/08/2015
(43) Publication Date : 28/08/2015

(54) Title of the invention : DOOR HINGES

(51) International classification :E05D
(31) Priority Document No :NA
(32) Priority Date :NA
(33) Name of priority country :NA
(86) International Application No :NA
Filing Date :NA
(87) International Publication No : NA
(61) Patent of Addition to Application Number :NA
Filing Date :NA
(62) Divisional to Application Number :NA
Filing Date :NA

(71)**Name of Applicant :**
1)PREM CHARLES I
Address of Applicant :S/o. IMMANUEL, 4/465 E, ADHIYAMAAN NAGAR MELSOMAR PETTAI, KRISHNAGIRI 635001 TAMILNADU. Tamil Nadu India
2)SUNDARPAUL S
(72)**Name of Inventor :**
1)PREM CHARLES I
2)SUNDARPAUL S
3)VENKATA MUTHU V P
4)SATEESKUMAR N
5)KARTHIKESAVAN J

(57) Abstract :
Present invention relates to a door or a window hinge. The device comprises a door / window stopping attachment which is composed with a manually engaging sliding mechanism which when engaged stops the door / window in a set position so that it does not rotate or dislocate from its set position due to wind and like other forces. The door hinge works as a door stopper through an integrated sliding spline shaft provided with a knob for operation to slide along its guide ways through a roller assembly and engage itself to a rotary internal splined knuckle stopping the rotation and locking the door / window in a position that the user requires it to be set, from an angle of 100to 2700with incremental values of 10degrees.

No. of Pages : 21 No. of Claims : 6

(12) PATENT APPLICATION PUBLICATION
(21) Application No.4189/CHE/2015 A
(19) INDIA
(22) Date of filing of Application :12/08/2015
(43) Publication Date : 28/08/2015

(54) Title of the invention : SAFETY ISOLATION BAGS FOR INTRA ABDOMINAL, ENDOSCOPIC PROCEDURES, POWER MORCELLATION AND VAGINAL MORCELLATION

(51) International classification :A61B
(31) Priority Document No :NA
(32) Priority Date :NA
(33) Name of priority country :NA
(86) International Application No :NA
Filing Date :NA
(87) International Publication No : NA
(61) Patent of Addition to Application Number :5813/CHE/2014
Filed on :01/01/1900
(62) Divisional to Application Number :NA
Filing Date :NA

(71)**Name of Applicant :**
1)JOSEPH, Lalu
Address of Applicant :13/756-A, Aradhana, Kunnel House, Thoppil, Thrikkara P.O., Ernakulum - 682 021, Kerala, India Kerala India
(72)**Name of Inventor :**
1)JOSEPH, Lalu

(57) Abstract :
A safety isolation bag is a pneumoperitoneum device for intra-abdominal, endoscopic procedures, power morcellation and vaginal morcellation for facilitating safe removal of body mass from within the abdominal cavity. It comprises of an expandable and collapsible enclosed internal space (5) having a neck portion (4) with mouth (3) having retractor means (2) and provided with markings, colour coded indicating how much the bag is to be pulled out for the removal of large, medium and small tissue mass, and also having one or more non-return valves (6) attached with long looped threads (8) on one of the surface in the wall of the safety isolation bag below the neck as a means for introducing the surgical instruments and accessories into the enclosed internal space at the right place and to close the puncture hole after the procedure. It is made of one or more layers of flexible biocompatible / medical grade plastic film.

No. of Pages : 40 No. of Claims : 14

(12) PATENT APPLICATION PUBLICATION
(21) Application No.3026/CHE/2015 A
(19) INDIA
(22) Date of filing of Application :17/06/2015
(43) Publication Date : 28/08/2015

(54) Title of the invention : PRODUCING CURRENT FROM SEA WAVES

(51) International classification :F03B
(31) Priority Document No :NA
(32) Priority Date :NA
(33) Name of priority country :NA
(86) International Application No :NA
Filing Date :NA
(87) International Publication No : NA
(61) Patent of Addition to Application Number :NA
Filing Date :NA
(62) Divisional to Application Number :NA
Filing Date :NA

(71)**Name of Applicant :**
1)E.LOGANATHAN
Address of Applicant :S/O. ETTYAPPAN, NO. 25, ERRIKKARAI STREET, NERKUNDRAM, CHENNAI - 600 107, Tamil Nadu India
(72)**Name of Inventor :**
1)E.LOGANATHAN

(57) Abstract :
Normally the Sea Waves rising certain height with a amount of forc, if we stop the waves of the Sea suddenly with a slope (V|), the waves of the sea raise itself again at certain level of the height, construct a water tank (1/4) side by the slope (V|) and collect the water and flow on a metal wheel (V3) which is fxed with a carnes (/4) and lifts (V5), The carries carry the water from the water tank and moves downwards and drained at centre of the wheel at lowest level of wheel, it means at the Sea level, The water Lift attached with water carries and it will be dip and fill the water and moves upward direction at the m¡ximum level of the metal wheel and will be drained well on the water dam (/6), gather the water as need as and allow flow on a generator wheel (V9) produce electric energy. Fix the units side by side and collect the huge amount of water like dam and produce huge amount of electric energy. The metal wheel (V3), radius should be minimum 25 feet, the water carriers (V4) capacity more than 20 times of the water lift (V5). The concrete slope placed at the m¡ximum forc of the waves of the Sea. The angle of the slope (V|) should be adjustable for the best results, the slope top side width musf be minimum, down side width must be m¡ximum, The distance between the slopes is must. The height of slope depending upon the Sea Wave forc and height, from the slope and generator forms a unit. For the best result use turbine get more and m¡ximum producing of electric energy. The device act as a automatic water pumps. This process happened endless and no dangerous signifcant, infiammable and expensive, safe and green atmosphere.

No. of Pages : 24 No. of Claims : 8

(12) PATENT APPLICATION PUBLICATION
(21) Application No.4093/CHE/2015 A
(19) INDIA
(22) Date of filing of Application :06/08/2015
(43) Publication Date : 28/08/2015

(54) Title of the invention : BUBBLED WATER ACOUSTIC NOISE REDUCING SYSTEM

(51) International classification :G10K
(31) Priority Document No :NA
(32) Priority Date :NA
(33) Name of priority country :NA
(86) International Application No :NA
Filing Date :NA
(87) International Publication No : NA
(61) Patent of Addition to Application Number :NA
Filing Date :NA
(62) Divisional to Application Number :NA
Filing Date :NA

(71)**Name of Applicant :**
1)P.PHILEMON
Address of Applicant :47, KUTTIAPPAN 2ND STREET, KILPAUK, CHENNAI - 600 010, Tamil Nadu India
2)N.NAVEETH IMRAN
(72)**Name of Inventor :**
1)P.PHILEMON
2)N.NAVEETH IMRAN

(57) Abstract :
BUBBLED WATER ACOUSTIC NOISE REDUCING SYSTEM is a method that can be used in industries to trap incoming high intensity sound waves by damping, this damping is done by entrapment of the sound waves by water bubbles.Industrial noise pollution has become a concern in industries for the past few years. The noise produced tends to penetrate the ear mufflers and cause irreversible damage to the ear drums.The devised system as illustrated in Fig 1 aims at reducing the noise levels in industries.

No. of Pages : 8 No. of Claims : 5

(12) PATENT APPLICATION PUBLICATION
(21) Application No.1181/CHE/2015 A
(19) INDIA
(22) Date of filing of Application :10/03/2015
(43) Publication Date : 28/08/2015

(54) Title of the invention : SMART PV SYSTEM

(51) International classification :H02J
(31) Priority Document No :NA
(32) Priority Date :NA
(33) Name of priority country :NA
(86) International Application No :NA
Filing Date :NA
(87) International Publication No : NA
(61) Patent of Addition to Application Number :NA
Filing Date :NA
(62) Divisional to Application Number :NA
Filing Date :NA

(71)**Name of Applicant :**
1)KHURRAM KHAN NAWAB
Address of Applicant :#8-2-629/1/2, Mulk Villa, Road No.12, Banjara Hills, Hyderabad 500 034, Telangana, India Telangana India
2)JUVERIA MA KHAN
(72)**Name of Inventor :**
1)JUVERIA MA KHAN
2)KHURRAM KHAN NAWAB

(57) Abstract :
This present invention relates to a Smart PV System which harness the solar energy and converts it into electric power that is built on Smart Platform Structure and uses the Smart mirror

No. of Pages : 15 No. of Claims : 6

(12) PATENT APPLICATION PUBLICATION
(21) Application No.5410/CHE/2014 A
(19) INDIA
(22) Date of filing of Application :30/10/2014
(43) Publication Date : 28/08/2015

(54) Title of the invention : NANOFILLER COMPOSITION AND MANUFACTURING METHOD FOR POLYMER HYBRID NANOCOMPOSITES

(51) International classification :C08K
(31) Priority Document No :NA
(32) Priority Date :NA
(33) Name of priority country :NA
(86) International Application No :NA
Filing Date :NA
(87) International Publication No : NA
(61) Patent of Addition to Application Number :NA
Filing Date :NA
(62) Divisional to Application Number :NA
Filing Date :NA

(71)**Name of Applicant :**
1)AMET UNIVERSITY
Address of Applicant :135 East Coast Road, Kanathur 603 112. Tel : 044-27472155 Tamil Nadu India
(72)**Name of Inventor :**
1)Dr.N.Manoharan
2)V.Selvakumar

(57) Abstract :
The present invention relates to a nanofiller composition of manufacturing method for polymer hybrid nanocomposites. In particular, the present invention relates to use of said hybrid nanocomposite as a master batch in a process for the preparation of a second hybrid nanocomposite.

No. of Pages : 7 No. of Claims : 3

(12) PATENT APPLICATION PUBLICATION
(21) Application No.3499/CHE/2015 A
(19) INDIA
(22) Date of filing of Application :08/07/2015
(43) Publication Date : 28/08/2015

(54) Title of the invention : AN ADVANCED DEVICE TO CONTROL ELECTRICAL APPLIANCES WITHOUT PHYSICAL CONNECTION

(51) International classification	:H05B	(71)**Name of Applicant :**
(31) Priority Document No	:NA	**1)JERRY. J. MARTIN**
(32) Priority Date	:NA	Address of Applicant :THUNDIL NO. 2, JISS NAGAR 202, KURISUMMOODU P.O, CHANGANASERRY - 686104, KOTTAYAM DIST, KERALA. Kerala India
(33) Name of priority country	:NA	
(86) International Application No	:NA	
Filing Date	:NA	(72)**Name of Inventor :**
(87) International Publication No	: NA	**1)JERRY. J. MARTIN**
(61) Patent of Addition to Application Number	:NA	
Filing Date	:NA	
(62) Divisional to Application Number	:NA	
Filing Date	:NA	

(57) Abstract :
The invention relates to a device used to control electrical appliances which is wireless and touch based. It comprises of switches, bell switches, fan regulators, dimmers etc. As it is wireless, no wires are required for connecting the device with the appliances but, instead they are connected via pairing both of them. The invention is modular and so the wall plate can house the required number of different types of control units like touch switches, touch regulators, touch dimmers, etc. The user can fix any combination of touch control units onto the device. These specially designed control units also come in various designs and attractive colored light indications that denote whether the switch is on or off and also the different levels of speeds of the fan, etc. By changing the colour and design of the indication from a wide variety of selection according to the user™s requirement, the colour and design of each control units can be changed.

No. of Pages : 20 No. of Claims : 10

(12) PATENT APPLICATION PUBLICATION
(21) Application No.5458/CHE/2014 A
(19) INDIA
(22) Date of filing of Application :31/10/2014
(43) Publication Date : 28/08/2015

(54) Title of the invention : SEWAGE TREATMENT FOR MARINE AND SHORE APPLICATIONS

(51) International classification :C02F3/00
(31) Priority Document No :NA
(32) Priority Date :NA
(33) Name of priority country :NA
(86) International Application No :NA
Filing Date :NA
(87) International Publication No : NA
(61) Patent of Addition to Application Number :NA
Filing Date :NA
(62) Divisional to Application Number :NA
Filing Date :NA

(71)**Name of Applicant :**
1)AMET UNIVERSITY
Address of Applicant :135 EAST COAST ROAD, KANATHUR - 603 112 Tamil Nadu India
(72)**Name of Inventor :**
1)PROFESSOR A. VISWESWARAN
2)PROFESSOR A. VENUGOPAL
3)PROFESSOR K.R. CHIDAMBARAM
4)PROFESSOR D. IMMANUEL THIAGARAJAN

(57) Abstract :
A compact sewage treatment plant consisting of three units to treat the sewage and the final effluent coming of third chamber can be recycled. It will comply with all IMO regulations and will satisfy MARPOL Annex IV regulations for Marine applications. The sewage that is separated out can be sent for Bio-Gas production on Shore installations. On board the ships this can be treated aerobically and dispensed thereafter. The Bio gas can be put to various uses thus saving money in the long run.

No. of Pages : 10 No. of Claims : 4

(12) PATENT APPLICATION PUBLICATION
(21) Application No.3918/CHE/2014 A
(19) INDIA
(22) Date of filing of Application :08/08/2014
(43) Publication Date : 28/08/2015

(54) Title of the invention : A SYSTEM FOR GENERATING HYDROKINETIC POWER FROM A SUBCRITICAL CHANNEL

(51) International classification :F16H
(31) Priority Document No :NA
(32) Priority Date :NA
(33) Name of priority country :NA
(86) International Application No :NA
Filing Date :NA
(87) International Publication No : NA
(61) Patent of Addition to Application Number :NA
Filing Date :NA
(62) Divisional to Application Number :NA
Filing Date :NA

(71)**Name of Applicant :**
1)CHALLA, Balaiah Mallikarjuna
Address of Applicant :#A1- 206, WHITE HOUSE APARTMENT, 6TH MAIN, 15TH CROSS, RT NAGAR, BANGALORE 560032, KARNATAKA, INDIA Karnataka India
(72)**Name of Inventor :**
1)CHALLA, Balaiah Mallikarjuna

(57) Abstract :
A system for generating hydrokinetic power from a subcritical channel is disclosed. The system comprises a power channel diverted from the subcritical channel for generating hydrokinetic power by changing one more flow parameters of water, wherein the power channel includes an intake section, one or more slope section, one or more power section and a recovery section, an intake spillway at the intake section of power channel, connecting the subcritical channel with the power channel for enhancing the velocity of water, wherein the intake spillway is designed based on rate of discharge of water to be drawn from the subcritical channel and an array of turbines located in the power channel for generating power using the diverted water from the subcritical channel, wherein the number of turbines are based on the length of the power channel. Figure 1A and 1B

No. of Pages : 39 No. of Claims : 16

(12) PATENT APPLICATION PUBLICATION
(21) Application No.5408/CHE/2014 A
(19) INDIA
(22) Date of filing of Application :30/10/2014
(43) Publication Date : 28/08/2015

(54) Title of the invention : EFFLUENT TREATMENT FOR MARINE AND SHORE BASED APPLICATIONS

(51) International classification :C02F
(31) Priority Document No :NA
(32) Priority Date :NA
(33) Name of priority country :NA
(86) International Application No :NA
Filing Date :NA
(87) International Publication No : NA
(61) Patent of Addition to Application Number :NA
Filing Date :NA
(62) Divisional to Application Number :NA
Filing Date :NA

(71)**Name of Applicant :**
1)AMET UNIVERSITY
Address of Applicant :135 East Coast Road, Kanathur 603 112. Tel : 044-27472155 Tamil Nadu India
(72)**Name of Inventor :**
1)Prof. A. Visweswaran
2)Professor A.Venugopal
3)Professor T.Mohan
4)Dr.N.Manoharan
5)Professor D.Immanuel Thiagarajan

(57) Abstract :
The unit is designed to treat Emulsified water to separate into Water, Sediments, and pinflocs. The discharge water coming out of the final stage has oil content less than 3ppm, colourless and odourless. This would meet stringent IMO regulations for overboard discharges from ships. This would also comply with all the requirements of National Anti-Pollution boards for effluent standards from Automobile service stations, Fabric manufacturing units etc whose discharges of waste water poses serious threat to environment. The unit consists of various stages of separation namely Flocculation and sedimentation, coalescence, filtration.

No. of Pages : 10 No. of Claims : 4

(12) PATENT APPLICATION PUBLICATION
(21) Application No.4124/CHE/2015 A
(19) INDIA
(22) Date of filing of Application :07/08/2015
(43) Publication Date : 28/08/2015

(54) Title of the invention : A NOVEL BI-AXIAL SOLAR TRACKER USING ONE MOTOR

(51) International classification :F24J
(31) Priority Document No :NA
(32) Priority Date :NA
(33) Name of priority country :NA
(86) International Application No :NA
Filing Date :NA
(87) International Publication No : NA
(61) Patent of Addition to Application Number :NA
Filing Date :NA
(62) Divisional to Application Number :NA
Filing Date :NA

(71)**Name of Applicant :**
1)DEVANURI JAYA KRISHNA
Address of Applicant :S/O.D.NAGESWARA RAO D.NO:26-20-37, SWAMY STREET GANDHINAGAR, VIJAYAWADA, PIN: 520 003 Andhra Pradesh India
(72)**Name of Inventor :**
1)SINGH PRASHANT KUMAR
2)DEVANURI JAYA KRISHNA

(57) Abstract :
A dual-axis solar tracking mechanism comprising of two transmission screws arranged in T form. Solar collector is connected to screws with a link and two dual degree of freedom couplings. Geneva mechanism, with, one driver wheel and two driven wheels are used to transmit power from motor to transmission screws. Driver wheel is connected to motor, one driven wheel is directly coupled to one transmission screw, and, another driven wheel is connected to a shaft via bevel gears, said shaft being parallel to other transmission screw and coupled to it via belt/chain drive. Cylindrical pins connected to a frame are used to transfer motion from driver wheel to driven Geneva wheels. A small two position linear actuator is provided to slide the said frame. Orientation of solar collector is dependent upon the position of said two couplings, which is controlled with the help of a microcontroller and shaft encoders.

No. of Pages : 21 No. of Claims : 12

(12) PATENT APPLICATION PUBLICATION
(21) Application No.4125/CHE/2015 A
(19) INDIA
(22) Date of filing of Application :07/08/2015
(43) Publication Date : 28/08/2015

(54) Title of the invention : AN INVESTIGATION ON MORPHOLOGY AND ANTICANCEROUS COMPOUND FROM ACTINOMYCETES

(51) International classification :C12N
(31) Priority Document No :NA
(32) Priority Date :NA
(33) Name of priority country :NA
(86) International Application No :NA
Filing Date :NA
(87) International Publication No : NA
(61) Patent of Addition to Application Number :NA
Filing Date :NA
(62) Divisional to Application Number :NA
Filing Date :NA

(71)**Name of Applicant :**
1)M.MASILAMANI SELVAM
Address of Applicant :DEPARTMENT OF BIOTECHNOLOGY, SATHYABAMA UNIVERSITY, JEPPIAAR NAGAR, CHENNAI, Tamil Nadu India
2)R.SUBBAIYA
(72)**Name of Inventor :**
1)M.MASILAMANI SELVAM
2)R.SUBBAIYA

(57) Abstract :
Actinomycetes is the gram positive bacteria which are most commonly isolated from the marine soil sample because the salt tolerant organism. In the initial stage of the appearance actinomycetes shows the white powdery in appearance. With the help of the specific media the actinomycetes are isolated successfully following different categories. Isolated actinomycetes shows the different characters of biochemical appearance. Biochemical appearance of actinomycetes resembles with different characters of the bioactive compound, with the different parameters. Isolation of actinomycetes subjected to different characters in morphology and also the resemblance of identification. Actinomycetes are the dominant group of soil population together with bacteria and fungi. Gram positive bacteria characters having the high G+C (>55%) content in their DNA.Bioactive compound isolated and identified characters are having the high amount of active compounds and also the biological characters. Bioactive compounds that may raises new possibilities in the diagnosis and treatment.With the outline of the compound it is easy to check the anticancer property of the isolated one.The study determines that the character of bioactiveagainst the cancer and shows the property of controlling the cancer cells.

No. of Pages : 9 No. of Claims : 3

(12) PATENT APPLICATION PUBLICATION
(21) Application No.1111/CHE/2015 A
(19) INDIA
(22) Date of filing of Application :06/03/2015
(43) Publication Date : 28/08/2015

(54) Title of the invention : PROELECTRON ENERGY

(51) International classification :H02J
(31) Priority Document No :NA
(32) Priority Date :NA
(33) Name of priority country :NA
(86) International Application No :NA
Filing Date :NA
(87) International Publication No : NA
(61) Patent of Addition to Application Number :NA
Filing Date :NA
(62) Divisional to Application Number :NA
Filing Date :NA

(71)**Name of Applicant :**
1)MR. C. A. SOMU
Address of Applicant :KHARKAANE STREET, KYATHANAHALLI, PANDAVAPURA TALUK, MANDYA DISTRICT-571427 Tamil Nadu India
(72)**Name of Inventor :**
1)MR. C. A. SOMU

(57) Abstract :
This new process technology details how electricity can be generated at any places and at any quantum irrespective of the availability of the resources and climatic conditions. This process does not require any fuel or does not require big investment thus it helps to protect the environment and also cut the cost of expenditure on power generation. It starts with DC Motor and then it starts working in the recycling pattern to generate electricity continuously without any interruption and the same DC Motor is kept recharging with the same power which is generated through this process and thus it works on the recycling pattern and electricity can be generated continuously.

No. of Pages : 8 No. of Claims : 3

Publication After 18 Months:

The following Patent Applications have been published under Section 11A (3) of The Patents (Amendment) Act, 2005. Any Person may file representation by way of opposition to the Controller of Patents at the appropriate office against the grant of the patent in the prescribed manner under section 25(1) of the Patents (Amendment) Act, 2005 read with the rule 55 of The Patents (Amendment) Rules, 2006:

(12) PATENT APPLICATION PUBLICATION

(21) Application No.10560/DELNP/2014 A

(19) INDIA

(22) Date of filing of Application :11/12/2014

(43) Publication Date : 28/08/2015

(54) Title of the invention : PROXIMITY VIEW MIRROR ASSEMBLY

(51) International classification	:B60R1/10,B60R1/08,B60R1/00
(31) Priority Document No	:2012901942
(32) Priority Date	:11/05/2012
(33) Name of priority country	:Australia
(86) International Application No	:PCT/AU2013/000479
Filing Date	:10/05/2013
(87) International Publication No	:WO 2013/166556
(61) Patent of Addition to Application Number	:NA
Filing Date	:NA
(62) Divisional to Application Number	:NA
Filing Date	:NA

(71)**Name of Applicant :**

1)ADVANCED VIEW SAFETY SYSTEMS PTY LTD

Address of Applicant :1/291 Wickham Road Moorabbin Victoria 3189 Australia

(72)**Name of Inventor :**

1)MACDOUGALL Craig Hart

2)KRATZER Oliver

(57) Abstract :

A proximity view mirror assembly (1) for a mobile vehicle (2) comprising a first mirror (3) adjustably mounted to said vehicle and adapted for direct viewing by a seated driver of said vehicle a second mirror (5) adjustably mounted relative to said first mirror wherein said first and second mirrors are generally opposed of a similar size and vertically offset so as to co operated and provide the seated driver with a generally forward proximity view of said vehicle.

No. of Pages : 25 No. of Claims : 19

(12) PATENT APPLICATION PUBLICATION
(21) Application No.10561/DELNP/2014 A
(19) INDIA
(22) Date of filing of Application :11/12/2014
(43) Publication Date : 28/08/2015

(54) Title of the invention : BAG3 AS BIOCHEMICAL SERUM AND TISSUE MARKER

(51) International classification :C07K16/18,C12Q1/68,G01N33/68
(31) Priority Document No :12172531.1
(32) Priority Date :19/06/2012
(33) Name of priority country :EPO
(86) International Application No :PCT/EP2013/061976
Filing Date :11/06/2013
(87) International Publication No :WO 2013/189778
(61) Patent of Addition to Application Number :NA
Filing Date :NA
(62) Divisional to Application Number :NA
Filing Date :NA

(71)**Name of Applicant :**
1)BIOUNIVERSA S.R.L.
Address of Applicant :at Difarma Universit di Salerno Via Giovanni Paolo II 132 I 84084 Fisciano (SA) Italy
(72)**Name of Inventor :**
1)TURCO Maria Caterina

(57) Abstract :
The present disclosure concerns the field of diagnostic biological markers. Specifically the disclosure relates to anti BAG3 antibodies for use as biological markers for the diagnosis of a pathological state. Furthermore the disclosure involves specific ELISA methods and kits for detecting and evaluating anti BAG3 antibodies or BAG3/antibody complexes in a biological sample.

No. of Pages : 84 No. of Claims : 18

(12) PATENT APPLICATION PUBLICATION
(21) Application No.10562/DELNP/2014 A
(19) INDIA
(22) Date of filing of Application :11/12/2014
(43) Publication Date : 28/08/2015

(54) Title of the invention : BAG3 AS BIOCHEMICAL SERUM AND TISSUE MARKER

(51) International classification :C12Q1/68,C07K16/18,G01N33/68
(31) Priority Document No :12172531.1
(32) Priority Date :19/06/2012
(33) Name of priority country :EPO
(86) International Application No :PCT/EP2013/061971
Filing Date :11/06/2013
(87) International Publication No :WO 2013/189775
(61) Patent of Addition to Application Number :NA
Filing Date :NA
(62) Divisional to Application Number :NA
Filing Date :NA

(71)**Name of Applicant :**
1)BIOUNIVERSA S.R.L.
Address of Applicant :at Difarma Universit di Salerno Via Giovanni Paolo II 132 I 84084 Fisciano (SA) Italy
(72)**Name of Inventor :**
1)TURCO Maria Caterina

(57) Abstract :
The present disclosure concerns the field of diagnostic biological markers. Specifically the invention relates to BAG3 RNA or a fragment thereof for use as biological markers for the diagnosis of a pathological state. Furthermore the disclosure involves specific kits and methods for detecting and/or evaluating the levels of BAG3 RNA or a fragment thereof in a biological sample.

No. of Pages : 93 No. of Claims : 25

(12) PATENT APPLICATION PUBLICATION
(19) INDIA
(22) Date of filing of Application :11/12/2014
(21) Application No.10563/DELNP/2014 A
(43) Publication Date : 28/08/2015

(54) Title of the invention : APPARATUS FOR CONVERTING ENERGY FROM FLUID FLOW

(51) International classification :F03B13/08
(31) Priority Document No :1210930.2
(32) Priority Date :20/06/2012
(33) Name of priority country :U.K.
(86) International Application No :PCT/GB2013/051612
Filing Date :20/06/2013
(87) International Publication No :WO 2013/190304
(61) Patent of Addition to Application Number :NA
Filing Date :NA
(62) Divisional to Application Number :NA
Filing Date :NA

(71)**Name of Applicant :**
1)VERDERG LTD
Address of Applicant :Lansbury Estate 102 Lower Guildford Road Knaphill Surrey GU21 2EP U.K.
(72)**Name of Inventor :**
1)ROBERTS Peter

(57) Abstract :
An apparatus (12) for generating electricity from water flow comprises a convergent section (14) a diffuser section (20) and tube (22) for locating within a body of water. The convergent section is connected to a first end of a mixing chamber (16)such that a venturi (18) is defined between the end of the convergent section and the mixing chamber. The diffuser section is connected to a second end of the mixing chamber the diffuser section configured such that in use the pressure at the exit of the diffuser section is greater than the pressure at the venturi. At least part of the tube is located in the convergent section such that an annulus is defined between the tube and the convergent section to form a first flow passage. The tube defines a second flow passage within the tube; and a turbine (26) connectable to a generator (28) is located within the tube.

No. of Pages : 36 No. of Claims : 36

(12) PATENT APPLICATION PUBLICATION
(21) Application No.10564/DELNP/2014 A
(19) INDIA
(22) Date of filing of Application :11/12/2014
(43) Publication Date : 28/08/2015

(54) Title of the invention : SYSTEM AND HEAT EXCHANGER FOR INCREASING THE TEMPERATURE OF A SUBSTANCE WHICH IS INITIALLY IN AN AT LEAST PARTLY SOLIDIFIED STATE IN A CONTAINER •

(51) International classification	:B65D 88/74, B67D 7/80	(71)**Name of Applicant :**
(31) Priority Document No	:PA 2004 00644	**1)AARHUSKARLSHAMN DENMARK A/S**
(32) Priority Date	:23/04/2004	Address of Applicant :M.P. BRUUNSGADE 27, DK-8000 AARHUS C, DENMARK Denmark
(33) Name of priority country	:Denmark	(72)**Name of Inventor :**
(86) International Application No	:PCT/DK2005/000268	**1)ANDERS KROMAND HANSEN**
Filing Date	:20/04/2005	
(87) International Publication No	: NA	
(61) Patent of Addition to Application Number	:NA	
Filing Date	:NA	
(62) Divisional to Application Number	:5655/DELNP/2006	
Filed on	:28/09/2006	

(57) Abstract :
A system comprising: a container adapted for storing a partly solidified substance and a melted liquid substance; a heat exchanger arranged with an oblong cylindrical section adapted for heat exchange with the substances inside the container; and a guiding means adapted to guide the substance along the oblong cylindrical section of the heat exchanger said guiding means comprising a housing, said housing comprising a plurality of openings arranged in a pattern along the length of said housing for distributing said flow of the substances and recirculating the substances; a pumping means connected to said guiding means, said pumping means comprising a pump positioned external to the container; where said pumping means and guiding means, displace the heat exchanged melted liquid substance through the plurality of openings thereby stirring the substance and circulating the melted liquid substance; and increasing flow speed and increasing heat exchange between the at least one heat exchanger and the substances; and further increasing heat exchange between the heat exchanged melted liquid substance and the remaining substance in the container. Fig: 6

No. of Pages : 33 No. of Claims : 10

(12) PATENT APPLICATION PUBLICATION
(21) Application No.10580/DELNP/2014 A
(19) INDIA
(22) Date of filing of Application :11/12/2014
(43) Publication Date : 28/08/2015

(54) Title of the invention : IMPROVEMENTS IN WASTE PROCESSING

(51) International classification :C10J3/02,C10K3/00,C10J3/62
(31) Priority Document No :1208656.7
(32) Priority Date :15/05/2012
(33) Name of priority country :U.K.
(86) International Application No :PCT/GB2013/051190
Filing Date :08/05/2013
(87) International Publication No :WO 2013/171457
(61) Patent of Addition to Application Number :NA
Filing Date :NA
(62) Divisional to Application Number :NA
Filing Date :NA

(71)**Name of Applicant :**
1)CHINOOK END STAGE RECYCLING LIMITED
Address of Applicant :No. 1 Nottingham Science Park Jesse Boot Avenue University Boulevard Nottingham Nottinghamshire NG7 2RU U.K.
(72)**Name of Inventor :**
1)CHALABI Rifat Al
2)PERRY Ophneil Henry

(57) Abstract :
This invention provides a system and method for pyrolysing and/or gasifying material such as organically coated waste and organic materials including biornass industrial waste municipal solid waste and sludge. In a first mode of operation the method/system heats the material in a processing chamber (10) by passing hot gas therethrough. This pyrolyses and/or gasifies the organic content it to produce syngas and invariably soot. In a second mode of operation the method/system increases the oxygen content of the hot gas such that the oxygen within the hot gas reacts with the heated soot to form carbon monoxide.

No. of Pages : 29 No. of Claims : 25

(12) PATENT APPLICATION PUBLICATION
(21) Application No.10581/DELNP/2014 A
(19) INDIA
(22) Date of filing of Application :11/12/2014
(43) Publication Date : 28/08/2015

(54) Title of the invention : A METHOD GUIDE GUIDE INDICIA GENERATION MEANS COMPUTER READABLE STORAGE MEDIUM REFERENCE MARKER AND IMPACTOR FOR ALIGNING AN IMPLANT

(51) International classification :A61F2/02,A61F2/30,A61F2/32
(31) Priority Document No :2012902337
(32) Priority Date :05/06/2012
(33) Name of priority country :Australia
(86) International Application No :PCT/AU2012/001198
Filing Date :03/10/2012
(87) International Publication No :WO 2013/181684
(61) Patent of Addition to Application Number :NA
Filing Date :NA
(62) Divisional to Application Number :NA
Filing Date :NA

(71)**Name of Applicant :**
1)OPTIMIZED ORTHO PTY LTD
Address of Applicant :Level 2 Pier 8/9 23 Hickson Road Walsh Bay New South Wales 2000 Australia
(72)**Name of Inventor :**
1)MILES Brad Peter
2)OCONNOR Peter Bede
3)ROE Justin
4)FRITSCH Brett
5)WALTER Len
6)MAREL Ed
7)SOLOMON Michael
8)CHEUNG Brian
9)BERGEON Milton Scott
10)PIERREPONT James William

(57) Abstract :
There is provided a method (100) for aligning and positioning an implant (305). The method (100) comprises creating a reference using a guide (500) configured in accordance with patient specific data; fixing the reference using a reference marker (920) and delivering the implant (305) with an impactor (1005) aligned in accordance with the reference. Guide light emission means (515a) may be employed to create the reference reference marker light emission means (515b) may be employed to fix the reference and impactor light emission means (515c) may be employed to align an impactor (1005).

No. of Pages : 61 No. of Claims : 113

(12) PATENT APPLICATION PUBLICATION
(21) Application No.10582/DELNP/2014 A
(19) INDIA
(22) Date of filing of Application :11/12/2014
(43) Publication Date : 28/08/2015

(54) Title of the invention : METHOD FOR PRODUCING SUBSTRATES FOR SUPERCONDUCTING LAYERS

(51) International classification :H01L39/14,H01L39/24
(31) Priority Document No :12168636.4
(32) Priority Date :21/05/2012
(33) Name of priority country :EPO
(86) International Application No :PCT/DK2013/050148
Filing Date :17/05/2013
(87) International Publication No :WO 2013/174380
(61) Patent of Addition to Application Number :NA
Filing Date :NA
(62) Divisional to Application Number :NA
Filing Date :NA

(71)**Name of Applicant :**
1)DANMARKS TEKNISKE UNIVERSITET
Address of Applicant :Anker Engelundsvej 1 Bygning 101A DK 2800 Lyngby Denmark
(72)**Name of Inventor :**
1)WULFF Anders Christian

(57) Abstract :
There is provided a method for producing a substrate (600) suitable for supporting an elongated superconducting element wherein e.g. a deformation process is utilized in order to form disruptive strips in a layered solid element and where etching is used to form undercut volumes (330 332) between an upper layer (316) and a lower layer (303) of the layered solid element. Such relatively simple steps enable providing a substrate which may be turned into a superconducting structure such as a superconducting tape having reduced AC losses since the undercut volumes (330 332) may be useful for separating layers of material. In a further embodiment there is placed a superconducting layer on top of the upper layer (316) and/or lower layer (303) so as to provide a superconducting structure with reduced AC losses.

No. of Pages : 60 No. of Claims : 18

(12) PATENT APPLICATION PUBLICATION
(21) Application No.10583/DELNP/2014 A
(19) INDIA
(22) Date of filing of Application :11/12/2014
(43) Publication Date : 28/08/2015

(54) Title of the invention : PROCESS FOR REDUCING THE NITROGEN OXIDE OFF GAS CONCENTRATION IN A NITRIC ACID PLANT DURING SHUT DOWN AND/OR START UP AND NITRIC ACID PLANT SUITABLE THEREFOR

(51) International classification :C01B21/26,B01D53/56,C01B21/40
(31) Priority Document No :102012010017.5
(32) Priority Date :22/05/2012
(33) Name of priority country :Germany
(86) International Application No :PCT/EP2013/001307
Filing Date :02/05/2013
(87) International Publication No :WO 2013/174475
(61) Patent of Addition to Application Number :NA
Filing Date :NA
(62) Divisional to Application Number :NA
Filing Date :NA

(71)**Name of Applicant :**
1)THYSSENKRUPP INDUSTRIAL SOLUTIONS AG
Address of Applicant :ThyssenKrupp Allee 1 45143 Essen Germany
(72)**Name of Inventor :**
1)PERBANDT Christian

(57) Abstract :
Process for reducing the nitrogen oxide off gas concentration in a nitric acid plant operated under pressure and equipped with residual gas purification during shut down and/or start up of the plant wherein the residual gas purification is designed for removing nitrogen oxides from the off gas for the steady state operation. The process is characterized in that during start up and/or during shut down of the nitric acid plant pressurized nitrogen oxide containing off gas from the nitric acid plant and gaseous reducing agent for the nitrogen oxides are passed into a reactor charged with catalyst which reactor is provided in addition to the reactor of the residual gas purification and in that the NOx content in the off gas is reduced by catalytic reduction or in that the NOx content in the off gas is reduced by catalytic reduction and the N2O content in the off gas is reduced by catalytic reduction and/or by catalytic decomposition in the additional reactor. Furthermore a nitric acid plant for carrying out this process is described. Using the process or using the plant a colourless start up and shut down of nitric acid plants is possible without problems and the nitrogen oxide content in the off gas during start up and/or shut down can be substantially lowered.

No. of Pages : 22 No. of Claims : 14

(12) PATENT APPLICATION PUBLICATION
(21) Application No.10570/DELNP/2014 A
(19) INDIA
(22) Date of filing of Application :11/12/2014
(43) Publication Date : 28/08/2015

(54) Title of the invention : MODULAR REAMER RETROGRADE ATTACHMENT

(51) International classification :A61B17/16,A61B17/04
(31) Priority Document No :61/660944
(32) Priority Date :18/06/2012
(33) Name of priority country :U.S.A.
(86) International Application No :PCT/US2013/046097
Filing Date :17/06/2013
(87) International Publication No :WO 2013/192080
(61) Patent of Addition to Application Number :NA
Filing Date :NA
(62) Divisional to Application Number :NA
Filing Date :NA

(71)**Name of Applicant :**
1)SMITH & NEPHEW INC.
Address of Applicant :1450 Brooks Road Memphis Tennessee 38116 U.S.A.
(72)**Name of Inventor :**
1)FERRAGAMO Michael Charles
2)SHORE Spencer William

(57) Abstract :
A surgical drill bit and retrograde reamer bit perform antegrade and retrograde drilling of a stepped diameter surgical tunnel employing a detachable reamer bit of a different diameter than the entry (antegrade) bit. The entry drill bit employs a cannulated shaft having a bore adapted to receive a guidewire and fluted cutting edges on an outer circumference of the shaft to define the surgical tunnel. A transverse receptacle across a diameter of the shaft extends substantially orthogonal to an axis of the bore is adapted to receive a reamer bit having a wider diameter for antegrade drilling the larger of the stepped diameters by withdrawing the reamer bit in the opposed direction from entry. The transverse receptacle is shaped for receiving the reamer bit and is adapted to secure the bit for retrograde cutting by intersecting with the bore for securing the reamer bit via engagement of a guidewire.

No. of Pages : 51 No. of Claims : 17

(12) PATENT APPLICATION PUBLICATION
(21) Application No.10572/DELNP/2014 A
(19) INDIA
(22) Date of filing of Application :11/12/2014
(43) Publication Date : 28/08/2015

(54) Title of the invention : MODIFIED HYDROPHILIC ACRYLIC RESIN FILM

(51) International classification :C08J7/12,C08J7/16
(31) Priority Document No :2012133074
(32) Priority Date :12/06/2012
(33) Name of priority country :Japan
(86) International Application No :PCT/JP2013/065722
Filing Date :06/06/2013
(87) International Publication No :WO 2013/187311
(61) Patent of Addition to Application Number :NA
Filing Date :NA
(62) Divisional to Application Number :NA
Filing Date :NA

(71)**Name of Applicant :**
1)MITSUI CHEMICALS INC.
Address of Applicant :5 2 Higashi Shimbashi 1 chome Minato ku Tokyo 1057117 Japan
(72)**Name of Inventor :**
1)OKAZAKI Koju

(57) Abstract :
A modified acrylic resin film of the present invention is obtained from an acrylic resin based film having an anionic hydrophilic group the film being obtained by treating the surface of an acrylic resin based film with a compound (A) having per molecule at least one anionic hydrophilic group and at least one group selected from the group consisting of a group having a polymerizable carbon carbon double bond an amino group a mercapto group and a hydroxyl group where the concentration of an anionic hydrophilic group on said surface is higher than the anionic hydrophilic group concentration of the half film thickness depth from the surface of the acrylic resin based film.

No. of Pages : 89 No. of Claims : 8

(12) PATENT APPLICATION PUBLICATION
(19) INDIA
(22) Date of filing of Application :11/12/2014
(21) Application No.10574/DELNP/2014 A
(43) Publication Date : 28/08/2015

(54) Title of the invention : VERMIN CONTROLLING AGENT

(51) International classification :A01N29/02,A01M7/00,A01N25/06
(31) Priority Document No :2012131329
(32) Priority Date :08/06/2012
(33) Name of priority country :Japan
(86) International Application No :PCT/JP2013/065796
Filing Date :07/06/2013
(87) International Publication No :WO 2013/183754
(61) Patent of Addition to Application Number :NA
Filing Date :NA
(62) Divisional to Application Number :NA
Filing Date :NA

(71)**Name of Applicant :**
1)EARTH CHEMICAL CO. LTD.
Address of Applicant :12 1 Kandatsukasamachi 2 chome Chiyoda ku Tokyo 1010048 Japan
2)HONEYWELL INTERNATIONAL INC.
(72)**Name of Inventor :**
1)ATARASHI Mikihiko
2)MATSUBARA Akira
3)ABE Ren

(57) Abstract :
Provided is a novel vermin controlling agent that is capable of quickly stopping the motions of vermin and killing the same is free from risk of explosion or ignition provides no fear of depletion of the ozone layer has a low global warming coefficient and therefore can be safely used. The vermin controlling agent comprises as an active ingredient 1-chloro -3,3,3 trifluoropropene.

No. of Pages : 29 No. of Claims : 17

(12) PATENT APPLICATION PUBLICATION
(21) Application No.10575/DELNP/2014 A
(19) INDIA
(22) Date of filing of Application :11/12/2014
(43) Publication Date : 28/08/2015

(54) Title of the invention : EJECTOR DEVICES METHODS DRIVERS AND CIRCUITS THEREFOR

(51) International classification :B41J2/045,H02N2/06
(31) Priority Document No :61/647359
(32) Priority Date :15/05/2012
(33) Name of priority country :U.S.A.
(86) International Application No :PCT/US2013/041208
Filing Date :15/05/2013
(87) International Publication No :WO 2013/173495
(61) Patent of Addition to Application Number :NA
Filing Date :NA
(62) Divisional to Application Number :NA
Filing Date :NA

(71)**Name of Applicant :**
1)CORINTHIAN OPHTHALMIC, INC.
Address of Applicant :148 Hwy 105 Extension, Suite 103, Boone, North Carolina 28607 U.S.A.
(72)**Name of Inventor :**
1)WILKERSON Jonathan Ryan
2)LYNCH Iyam
3)PARROTT Jeffrey
4)HUNTER Charles Eric

(57) Abstract :
In a piezoelectric ejector assembly a piezoelectric actuator is attached to an ejector mechanism while a drive signal generator and a controller are coupled to the actuator. The drive signal generator is configured to generate a drive signal for driving the actuator to oscillate the ejector assembly. The controller is configured to control the drive signal generator to drive the actuator at a resonant frequency of the ejector assembly and an auto tuning circuit is provided to define the optimum drive signal frequency.

No. of Pages : 103 No. of Claims : 67

(12) PATENT APPLICATION PUBLICATION
(21) Application No.10576/DELNP/2014 A
(19) INDIA
(22) Date of filing of Application :11/12/2014
(43) Publication Date : 28/08/2015

(54) Title of the invention : PYRIMIDINYL TYROSINE KINASE INHIBITORS

(51) International classification :A01N43/40,A61K31/435,A61K31/445
(31) Priority Document No :61/657360
(32) Priority Date :08/06/2012
(33) Name of priority country :U.S.A.
(86) International Application No :PCT/US2013/044800
Filing Date :07/06/2013
(87) International Publication No :WO 2013/185084
(61) Patent of Addition to Application Number :NA
Filing Date :NA
(62) Divisional to Application Number :NA
Filing Date :NA

(71)**Name of Applicant :**
1)BIOGEN IDEC MA INC.
Address of Applicant :133 Boston Post Road Weston Massachusetts 02493 U.S.A.
2)SUNESIS PHARMACEUTICALS INC.
(72)**Name of Inventor :**
1)HOPKINS Brian T.
2)CONLON Patrick
3)CHAN Timothy R.
4)JENKINS Tracy J.
5)CAI Xiongwei
6)HUMORA Michael
7)SHI Xianglin
8)MILLER Ross A.
9)THOMPSON Andrew

(57) Abstract :
The present invention provides compounds and compositions thereof which are useful as inhibitors of Bruton s tyrosine kinase and which exhibit desirable characteristics for the same.

No. of Pages : 94 No. of Claims : 27

(12) PATENT APPLICATION PUBLICATION
(21) Application No.10577/DELNP/2014 A
(19) INDIA
(22) Date of filing of Application :11/12/2014
(43) Publication Date : 28/08/2015

(54) Title of the invention : METHOD AND SYSTEM FOR THERMAL TREATMENTS OF RAILS

(51) International classification :C21D1/20,C21D9/04,C21D11/00
(31) Priority Document No :12425110.9
(32) Priority Date :11/06/2012
(33) Name of priority country :EPO
(86) International Application No :PCT/EP2013/061793
Filing Date :07/06/2013
(87) International Publication No :WO 2013/186137
(61) Patent of Addition to Application Number :NA
Filing Date :NA
(62) Divisional to Application Number :NA
Filing Date :NA

(71)**Name of Applicant :**
1)SIEMENS S.P.A.
Address of Applicant :Viale Piero e Alberto Pirelli 10 I 20126 Milano Italy
(72)**Name of Inventor :**
1)LAINATI Alberto Gioachino
2)LANGELLOTTO Luigi
3)MAZZARANO Andrea
4)PEGORIN Federico
5)SACCOCCI Alessio
6)SCIUCCATI Augusto

(57) Abstract :
Method of thermal treatment of hot rails to obtain a desired microstructure having enhanced mechanical properties the method comprising an active cooling phase wherein the rail is fast cooled from an austenite temperature and subsequently soft cooled to maintain a target transformation temperature between defined values the cooling treatment being performed by a plurality of cooling modules (12.n) each cooling module comprising a plurality of means spraying a cooling medium onto the rail the process being characterised in that during the active cooling phase each cooling means is driven to control the cooling rate of the rail such that the amount of transformed austenite within the rail is not lower than 50% on rail surface and not lower than 20% at rail head core.

No. of Pages : 30 No. of Claims : 14

(12) PATENT APPLICATION PUBLICATION
(21) Application No.10660/DELNP/2014 A
(19) INDIA
(22) Date of filing of Application :13/12/2014
(43) Publication Date : 28/08/2015

(54) Title of the invention : THERMOPLASTIC ELASTOMER TUBING AND METHOD TO MAKE AND USE SAME

(51) International classification :B29D23/00,C08L23/00,B29C47/26
(31) Priority Document No :61/656402
(32) Priority Date :06/06/2012
(33) Name of priority country :U.S.A.
(86) International Application No :PCT/US2013/043715
Filing Date :31/05/2013
(87) International Publication No :WO 2013/184517
(61) Patent of Addition to Application Number :NA
Filing Date :NA
(62) Divisional to Application Number :NA
Filing Date :NA

(71)**Name of Applicant :**
1)SAINT GOBAIN PERFORMANCE PLASTICS CORPORATION
Address of Applicant :1199 South Chillicothe Road Aurora Ohio 44202 U.S.A.
(72)**Name of Inventor :**
1)SIDDHAMALLI Sridhar Krishnamurthi
2)SIMON Mark W.
3)SCHRADER Steven
4)KUNDINGER Todd E.

(57) Abstract :
A thermoplastic elastomer tube can include a thermoplastic elastomer component disposed within a matrix. In an embodiment the thermoplastic elastomer component is disposed within the matrix in a thermoplastic elastomer phase having a number of domains. At least approximately 50% of the domains of the thermoplastic elastomer component have an aspect ratio of no greater than approximately 1.5. In a particular embodiment the thermoplastic elastomer tube comprises at least approximately 20 wt% of the thermoplastic elastomer component and no greater than approximately 50 wt% of a polyolefin component. In some embodiments the thermoplastic elastomer component includes styrene.

No. of Pages : 50 No. of Claims : 63

(12) PATENT APPLICATION PUBLICATION
(21) Application No.10661/DELNP/2014 A
(19) INDIA
(22) Date of filing of Application :13/12/2014
(43) Publication Date : 28/08/2015

(54) Title of the invention : METHOD OF REDUCING SAG OF A CEILING TILE AND CEILING TILE

(51) International classification :C04B28/14,C04B41/50,E04B9/04
(31) Priority Document No :13/490937
(32) Priority Date :07/06/2012
(33) Name of priority country :U.S.A.
(86) International Application No :PCT/US2013/042405
Filing Date :23/05/2013
(87) International Publication No :WO 2013/184376
(61) Patent of Addition to Application Number :NA
Filing Date :NA
(62) Divisional to Application Number :NA
Filing Date :NA

(71)**Name of Applicant :**
1)USG INTERIORS LLC
Address of Applicant :550 West Adams Street Chicago Illinois 60661 3676 U.S.A.
(72)**Name of Inventor :**
1)YEUNG Lee K.

(57) Abstract :
Sag in ceiling tiles is reduced by the present coated ceiling tile and method which decreases sag in the coated ceiling tiles. Calcined gypsum and water are combined to form a coating which is applied to the back side of a base ceiling tile in a thin layer of about 100 micrometer to about 1000 micrometers. The coating optionally includes a set time modifier. This method makes a coated ceiling tile from a base ceiling tile having a front side and a back side opposing the front side. The coating is applied to the back side of the base ceiling tile the coating comprising an interlocking matrix of calcium sulfate dihydrate. Optionally remnants of the set time modifier are present within interstices in the gypsum matrix. The remnants of the set time molecule include ions molecules particles or combinations thereof.

No. of Pages : 22 No. of Claims : 10

(12) PATENT APPLICATION PUBLICATION
(19) INDIA
(22) Date of filing of Application :13/12/2014
(21) Application No.10662/DELNP/2014 A
(43) Publication Date : 28/08/2015

(54) Title of the invention : INTRAOCULAR GAS INJECTOR

(51) International classification :A61D1/02,A61D7/00,A61F9/007
(31) Priority Document No :61/658765
(32) Priority Date :12/06/2012
(33) Name of priority country :U.S.A.
(86) International Application No :PCT/US2013/045515
Filing Date :12/06/2013
(87) International Publication No :WO 2013/188595
(61) Patent of Addition to Application Number :NA
Filing Date :NA
(62) Divisional to Application Number :NA
Filing Date :NA

(71)**Name of Applicant :**
1)ALTAVIZ LLC
Address of Applicant :2 Park Plaza Suite 450 Irvine CA 92614 U.S.A.
(72)**Name of Inventor :**
1)AULD Jack R.
2)HUCULAK John C.
3)McCOLLAM Christopher L.

(57) Abstract :
A gas mixture apparatus includes a measurement control system an activation system a pressurized chamber with one or more gases and a mixing chamber. The apparatus can also include additional pressure regulation control systems. The gas mixture apparatus can be used to introduce and automatically perform the steps to achieve a desired concentration of the one or more gases contained in the pressurized chamber. The gas mixture apparatus can include the pressurized chamber within the apparatus itself such that no external devices are necessary for introducing the one or more gases into the mixing chamber.

No. of Pages : 84 No. of Claims : 59

(12) PATENT APPLICATION PUBLICATION
(19) INDIA
(22) Date of filing of Application :13/12/2014
(21) Application No.10663/DELNP/2014 A
(43) Publication Date : 28/08/2015

(54) Title of the invention : METHOD AND DEVICE FOR MONITORING AN ENERGY FEED IN POINT OF AN ENERGY SUPPLY NETWORK

(51) International classification :H02J3/06,H02J3/32,H02J3/38
(31) Priority Document No :NA
(32) Priority Date :NA
(33) Name of priority country :NA
(86) International Application No :PCT/EP2012/063184
Filing Date :05/07/2012
(87) International Publication No :WO 2014/005642
(61) Patent of Addition to Application Number :NA
Filing Date :NA
(62) Divisional to Application Number :NA
Filing Date :NA

(71)**Name of Applicant :**
1)SIEMENS AKTIENGESELLSCHAFT
Address of Applicant :Wittelsbacherplatz 2 80333 M¼nchen Germany
(72)**Name of Inventor :**
1)LANGEMEYER Stefan
2)REINSCHKE Johannes

(57) Abstract :
The invention describes a method for monitoring an energy feed-in point (ESP) of an energy supply network (EVN), particularly in the low voltage rnge, a number of first and second nodes (Kl l , K12, K13, K2) being connected or connectable to the energy feed-in point, the respective nodes (Kl l , K12, Kl 3, K2) being an energy producer, an energy consumer or a prosumer. In the method according to the invention, an actual current which represents the current consumption or current Output is detected at the energy feed-in point (ESP) by a measuring and monitoring device. A piece of current information (SI) received from one of the first nodes (Kl 1, K12, Kl 3), which represents an intended and/or a maximum possible current consumption or Output of the first node (Kl l , K12, K13), is processed by checking whether a current value in the piece of current information (SI) fulfils a predetermined criterion in respect of a possible current value (MW) of the energy feed-in point o (ESP). The possible current value (MW) is o determined by a differential formed from the predetermined maximum current of the energy feed-in point (ESP) and the actual current. o Finally, depending on whether the criterion at the first node (Kl l , K12, K13) is fulfilled or not, a message is transferred which confirms or denies the current consumption or Output to the first node (Kl 1, K12, K13).

FIG 1

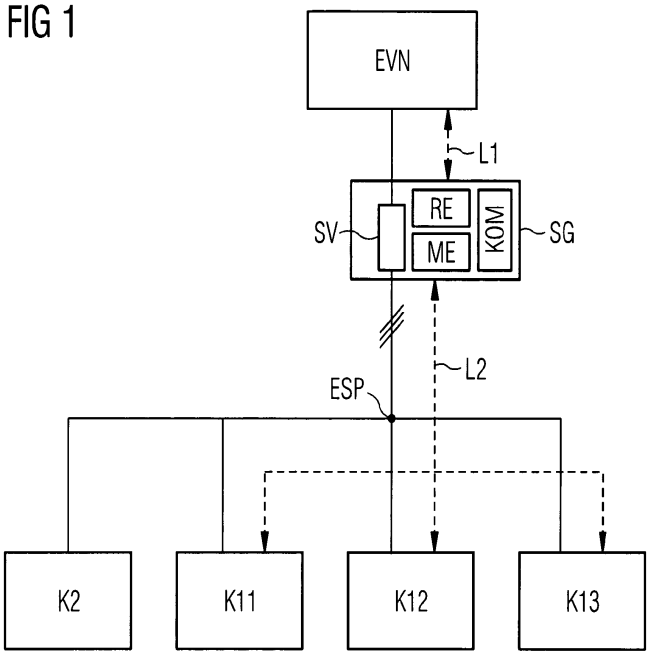

No. of Pages : 34 No. of Claims : 16

(12) PATENT APPLICATION PUBLICATION
(21) Application No.10673/DELNP/2014 A
(19) INDIA
(22) Date of filing of Application :15/12/2014
(43) Publication Date : 28/08/2015

(54) Title of the invention : PALIPERIDONE IMPLANT FORMULATION

(51) International classification :A61K47/34,A61K31/519,A61K9/00
(31) Priority Document No :12170366.4
(32) Priority Date :31/05/2012
(33) Name of priority country :EPO
(86) International Application No :PCT/EP2013/061319
Filing Date :31/05/2013
(87) International Publication No :WO 2013/178811
(61) Patent of Addition to Application Number :NA
Filing Date :NA
(62) Divisional to Application Number :NA
Filing Date :NA

(71)**Name of Applicant :**
1)LABORATORIOS FARMAC‰UTICOS ROVI S.A.
Address of Applicant :C/ Juli¡n Camarillo 35 E 28037 Madrid Spain
(72)**Name of Inventor :**
1)GUTIERRO ADURIZ Ibon
2)FRANCO RODR • GUEZ Guillermo

(57) Abstract :
An injectable intramuscular depot composition suitable for forming an in situ solid implant in a body comprising a drug which is paliperidone and/or its pharmaceutical acceptable salts in any combination thereof a biocompatible copolymer based on lactic and glycolic acid having a monomer ratio of lactic to glycolic acid in the range from 50:50 and a DMSO solvent wherein the composition releases the drug with an immediate onset of action and continuously for at least 8 weeks and wherein the composition has a pharmacokinetic profile suitable for the formulation to be administered each 8 weeks or even longer periods.

No. of Pages : 38 No. of Claims : 15

(12) PATENT APPLICATION PUBLICATION
(21) Application No.10674/DELNP/2014 A
(19) INDIA
(22) Date of filing of Application :15/12/2014
(43) Publication Date : 28/08/2015

(54) Title of the invention : METHOD FOR PREPARING VINYL CHLORIDE WITH ACETYLENE AND DICHLORETHANE

(51) International classification :C07C17/08,C07C17/25,C07C21/06
(31) Priority Document No :201210191433.0
(32) Priority Date :11/06/2012
(33) Name of priority country :China
(86) International Application No :PCT/CN2012/078540
Filing Date :12/07/2012
(87) International Publication No :WO 2013/185400
(61) Patent of Addition to Application Number :NA
Filing Date :NA
(62) Divisional to Application Number :NA
Filing Date :NA

(71)**Name of Applicant :**
1)SHANGHAI ADVANCED RESEARCH INSTITUTE CHINESE ACADEMY OF SCIENCES
Address of Applicant :No. 99 Haike Road Zhangjiang Hi Tech Park Pudong New Area Shanghai 201203 China
2)ZHONGKE YIGONG (SHANGHAI) CHEMICAL TECHNOLOGY CO. LTD.
(72)**Name of Inventor :**
1)JIANG Biao
2)ZHONG Jinguang

(57) Abstract :
The present invention provides a method for preparing vinyl chloride with acetylene and dichlorethane. The present invention is a method for preparing vinyl chloride with acetylene and dichlorethane for large scale industrial production. Acetylene dichlorethane vapor and hydrogen chloride gas at a molar ratio of 1:(0.3 1.0):(0 0.20) are mixed; the starting mixed gas is preheated; the preheated starting mixed gas is charged into a reactor containing a catalyst and reacts; the resultant mixed gas is cooled to 30 50oC and pressurized to 0.4 1.0 MPa and then cooled to ambient temperature and further frozen to 25 15oC for liquefaction isolation and unfluidified gas is recycled and reused; fluidified liquid is sent to a rectifying tower for rectification and vinyl chloride monomers meeting polymerization requirements are obtained. The present invention has the advantages of eliminating mercury contamination completely simplifying the reactor structure recycling hydrogen chloride and acetylene omitting waterwash process avoiding mass production of waste acid and improving utilization of chlorine.

No. of Pages : 20 No. of Claims : 10

(12) PATENT APPLICATION PUBLICATION
(21) Application No.10675/DELNP/2014 A
(19) INDIA
(22) Date of filing of Application :15/12/2014
(43) Publication Date : 28/08/2015

(54) Title of the invention : INSECTICIDAL N-SUBSTITUTED SULFILIMINE AND SULFOXIMINE PYRIDINE N-OXIDES

(51) International classification :A01N43/40
(31) Priority Document No :61/666814
(32) Priority Date :30/06/2012
(33) Name of priority country :U.S.A.
(86) International Application No :PCT/US2013/045333
Filing Date :12/06/2013
(87) International Publication No :WO 2014/004086
(61) Patent of Addition to Application Number :NA
Filing Date :NA
(62) Divisional to Application Number :NA
Filing Date :NA

(71)**Name of Applicant :**
1)DOW AGROSCIENCES LLC
Address of Applicant :9330 Zionsville Road Indianapolis IN 46268 1054 U.S.A.
(72)**Name of Inventor :**
1)BLAND Douglas C.
2)ROSS Ronald Jr.
3)JOHNSON Peter L.
4)JOHNSON Timothy C.

(57) Abstract :
N-substituted sulfilimine and sulfoximine pyridine N-oxides and their use in controlling insects and other inverteb - rates are provided. Further embodiments, forms, objects, features, advantages, aspects, and benefits shall become apparent from the description.

No. of Pages : 52 No. of Claims : 10

(12) PATENT APPLICATION PUBLICATION
(21) Application No.10676/DELNP/2014 A
(19) INDIA
(22) Date of filing of Application :15/12/2014
(43) Publication Date : 28/08/2015

(54) Title of the invention : DISPENSING HEAD AND DISPENSING DEVICE

(51) International classification :B05B11/00,B65D83/20,B65D83/34
(31) Priority Document No :10 2012 013 352.9
(32) Priority Date :06/07/2012
(33) Name of priority country :Germany
(86) International Application No :PCT/EP2013/002003
Filing Date :08/07/2013
(87) International Publication No :WO 2014/005723
(61) Patent of Addition to Application Number :NA
Filing Date :NA
(62) Divisional to Application Number :NA
Filing Date :NA

(71)**Name of Applicant :**
1)APTAR DORTMUND GMBH
Address of Applicant :Hildebrandstrae 20 44319 Dortmund Germany
(72)**Name of Inventor :**
1)NEUHAUS Reinhard
2)JORDAN Ralf
3)SCHMITZ Detlef
4)BARENHOFF Swen

(57) Abstract :
The invention relates to a dispensing device and to a dispensing head (6) and the use thereof. By pressing down on the dispensing head an associated dispensing valve (4) is opened and the product (2) to be dispensed can flow out and/or can be discharged by way of a discharge chamber (9) and a downstream dispensing valve. In order to avoid or at least minimize post dripping or foaming the volume of the discharge chamber is initially reduced when the dispensing head is actuated and once the actuation is finished particularly after the dispensing valve is closed is enlarged again so that the product is suctioned from the outlet that is the dispensing valve back into the discharge chamber.

No. of Pages : 38 No. of Claims : 15

(12) PATENT APPLICATION PUBLICATION
(19) INDIA
(22) Date of filing of Application :15/12/2014
(21) Application No.10677/DELNP/2014 A
(43) Publication Date : 28/08/2015

(54) Title of the invention : PYRIDINE N OXIDES AND PROCESSES FOR THEIR PREPARATION

(51) International classification :A01N43/40
(31) Priority Document No :61/666811
(32) Priority Date :30/06/2012
(33) Name of priority country :U.S.A.
(86) International Application No :PCT/US2013/045300
Filing Date :12/06/2013
(87) International Publication No :WO 2014/004080
(61) Patent of Addition to Application Number :NA
Filing Date :NA
(62) Divisional to Application Number :NA
Filing Date :NA

(71)**Name of Applicant :**
1)DOW AGROSCIENCES LLC
Address of Applicant :9330 Zionsville Road Indianapolis IA 46268 1054 U.S.A.
(72)**Name of Inventor :**
1)BLAND Douglas C.
2)ROSS Ronald Jr.
3)JOHNSON Peter L.
4)JOHNSON Timothy C.

(57) Abstract :
In one embodiment, processes for the preparation of certain functionalized pyridine N-oxides are provided. In one form, the functionalized pyridine N-oxides include 2-substituted-5-(l-alkylthio)alkyl-pyridine N-oxides. Further embodiments, forms, objects, features, advantages, aspects, and benefits shall become apparent from the description.

No. of Pages : 36 No. of Claims : 21

(12) PATENT APPLICATION PUBLICATION
(21) Application No.10681/DELNP/2014 A
(19) INDIA
(22) Date of filing of Application :15/12/2014
(43) Publication Date : 28/08/2015

(54) Title of the invention : POLYMERIZABLE COMPOSITION FOR OPTICAL MATERIAL OPTICAL MATERIAL AND PLASTIC LENS OBTAINED FROM SAID COMPOSITION

(51) International classification :G02B5/23,B29C39/02,C08G18/38
(31) Priority Document No :2012143125
(32) Priority Date :26/06/2012
(33) Name of priority country :Japan
(86) International Application No :PCT/JP2013/066812
Filing Date :19/06/2013
(87) International Publication No :WO 2014/002844
(61) Patent of Addition to Application Number :NA
Filing Date :NA
(62) Divisional to Application Number :NA
Filing Date :NA

(71)**Name of Applicant :**
1)MITSUI CHEMICALS INC.
Address of Applicant :5 2 Higashi Shimbashi 1 chome Minato ku Tokyo 1057117 Japan
(72)**Name of Inventor :**
1)RYU Akinori

(57) Abstract :
A polymerizable composition for an optical material of the present invention comprises (A) at least one isocyanate compound selected from an aliphatic isocyanate compound and an alicyclic isocyanate compound (B) a bi or higher functional active hydrogen compound and (C) a photochromic compound.

No. of Pages : 64 No. of Claims : 10

(12) PATENT APPLICATION PUBLICATION
(21) Application No.10682/DELNP/2014 A
(19) INDIA
(22) Date of filing of Application :15/12/2014
(43) Publication Date : 28/08/2015

(54) Title of the invention : METHOD FOR COMPACTING ANODIC PAINTS INCLUDING THE COLLISION OF SANDBLASTING JETS

(51) International classification :B24C1/10,B24C3/02,C23C30/00
(31) Priority Document No :1254921
(32) Priority Date :29/05/2012
(33) Name of priority country :France
(86) International Application No :PCT/FR2013/051192
Filing Date :29/05/2013
(87) International Publication No :WO 2013/178941
(61) Patent of Addition to Application Number :NA
Filing Date :NA
(62) Divisional to Application Number :NA
Filing Date :NA

(71)**Name of Applicant :**
1)SNECMA socit anonyme
Address of Applicant :2 Boulevard du Gnral Martial Valin F 75015 Paris France
(72)**Name of Inventor :**
1)BOULOGNE Jacques
2)POTEL Alain

(57) Abstract :
The invention relates to a method for compacting anodic paints by means of sandblasting which comprises directing at least two jets (3) of an abrasive material toward a part (1) covered with the paint said jets being directed in a convergent manner and meeting at a focal point (4) characterised in that said focal point is located upstream from the part (1).

No. of Pages : 11 No. of Claims : 5

(12) PATENT APPLICATION PUBLICATION
(21) Application No.10683/DELNP/2014 A
(19) INDIA
(22) Date of filing of Application :15/12/2014
(43) Publication Date : 28/08/2015

(54) Title of the invention : N-METHYL-4-BENZYLCARBAMIDOPYRIDINIUM CHLORIDE AND A PROCESS FOR ITS PREPARATION

(51) International classification :C07D213/81,A61K31/4425,A61P31/12
(31) Priority Document No :PCT/EP2012/059258
(32) Priority Date :18/05/2012
(33) Name of priority country :EPO
(86) International Application No:PCT/EP2013/060158
Filing Date :16/05/2013
(87) International Publication No :WO 2013/171307
(61) Patent of Addition to Application Number :NA
Filing Date :NA
(62) Divisional to Application Number :NA
Filing Date :NA

(71)**Name of Applicant :**
1)FARMAK INTERNATIONAL HOLDING GMBH
Address of Applicant :Mariahilferstrasse 136 Office TOP 1.15 A 1150 Vienna Austria
(72)**Name of Inventor :**
1)ZHEBROVSKA Filya
2)KOSTIUK Grygorii
3)VANAT Mykhailo
4)MARGITYCH Viktor

(57) Abstract :
The present application relates to a new salt of N-methyl-4-benzylcarbami- dopyridine, a process for its preparation, a pharmaceutical composition comprising this compound and its use for the treatment or prevention of viral diseases.

No. of Pages : 35 No. of Claims : 17

(12) PATENT APPLICATION PUBLICATION
(21) Application No.10684/DELNP/2014 A
(19) INDIA
(22) Date of filing of Application :15/12/2014
(43) Publication Date : 28/08/2015

(54) Title of the invention : HYDROGENATION OF DENE BASED POLYMER LATEX IN THE PRESENCE OF AN IN SITU SYNTHESIZED CATALYST

(51) International classification	:C08F8/04,C08F4/80	(71)**Name of Applicant :**
(31) Priority Document No	:12173162.4	**1)UNIVERSITY OF WATERLOO**
(32) Priority Date	:22/06/2012	Address of Applicant :200 University Ave W Waterloo Ontario N2L 3G1 Canada
(33) Name of priority country	:EPO	
(86) International Application No	:PCT/IB2013/001322	(72)**Name of Inventor :**
Filing Date	:21/06/2013	**1)REMPEL Garry L.**
(87) International Publication No	:WO 2013/190375	**2)PAN Qinmin**
(61) Patent of Addition to Application Number	:NA	**3)LIU Yin**
Filing Date	:NA	
(62) Divisional to Application Number	:NA	
Filing Date	:NA	

(57) Abstract :
A technique of improving the hydrogenation reaction of diene based polymers present in aqueous suspension by in situ synthesizing the catalyst in the presence of a specific aliphatic alcohol is disclosed. The process allows the selective hydrogenation of the carbon carbon double bonds in the diene based polymers with a high degree of hydrogenation and short reactions times. The improved process eliminates the complicated catalyst synthesis operations so far necessary.

No. of Pages : 36 No. of Claims : 15

(12) PATENT APPLICATION PUBLICATION
(21) Application No.10686/DELNP/2014 A
(19) INDIA
(22) Date of filing of Application :15/12/2014
(43) Publication Date : 28/08/2015

(54) Title of the invention : HYDROGENATION OF A DIENE BASED POLYMER LATEX

(51) International classification :C08F8/04,C08F4/80
(31) Priority Document No :12173165.7
(32) Priority Date :22/06/2012
(33) Name of priority country :EPO
(86) International Application No :PCT/IB2013/001319
Filing Date :21/06/2013
(87) International Publication No :WO 2013/190373
(61) Patent of Addition to Application Number :NA
Filing Date :NA
(62) Divisional to Application Number :NA
Filing Date :NA

(71)**Name of Applicant :**
1)UNIVERSITY OF WATERLOO
Address of Applicant :200 University Avenue West Waterloo Ontario N2L 3G1 Canada
(72)**Name of Inventor :**
1)REMPEL, Garry, L
2)PAN, Qinmin
3)LIU, Yin

(57) Abstract :
The present invention provides a novel process for selectively hydrogenating the carbon carbon double bonds in diene based polymers which are present in latex form this means as a suspension of diene based polymer particles in an aqueous medium using a Ruthenium or Osmium based complex catalyst without any organic solvent.

No. of Pages : 35 No. of Claims : 8

(12) PATENT APPLICATION PUBLICATION
(19) INDIA
(22) Date of filing of Application :15/12/2014
(21) Application No.10687/DELNP/2014 A
(43) Publication Date : 28/08/2015

(54) Title of the invention : CAP FOR CONTAINERS FOR EXAMPLE FOR BOTTLES OR FLEXIBLE POUCHES

(51) International classification :B65D41/04,B65D41/34,B65D51/24
(31) Priority Document No :BS2012A000110
(32) Priority Date :18/07/2012
(33) Name of priority country :Italy
(86) International Application No :PCT/IB2013/055109
Filing Date :21/06/2013
(87) International Publication No :WO 2014/013361
(61) Patent of Addition to Application Number :NA
Filing Date :NA
(62) Divisional to Application Number :NA
Filing Date :NA

(71)**Name of Applicant :**
1)GUALA PACK S.P.A.
Address of Applicant :Via Carlo Mussa 266 I 15073 Castellazzo Bormida ALESSANDRIA Italy
(72)**Name of Inventor :**
1)TAMARINDO Stefano

(57) Abstract :
A cap (1) for a container or for a straw for a flexible pouch in particular for containing liquid foods such as fruit juice and other similar drinks is provided with a guarantee seal (8) and an annular wall (10) having a lower free rim (10a) having a waved pattern so as to better observe the guarantee seal.

No. of Pages : 14 No. of Claims : 11

(12) PATENT APPLICATION PUBLICATION
(21) Application No.10688/DELNP/2014 A
(19) INDIA
(22) Date of filing of Application :15/12/2014
(43) Publication Date : 28/08/2015

(54) Title of the invention : WIND TURBINE AND METHOD FOR CONTROLLING A WIND TURBINE OR A WIND FARM

(51) International classification :F03D11/00
(31) Priority Document No :10 2012 210 150.0
(32) Priority Date :15/06/2012
(33) Name of priority country :Germany
(86) International Application No :PCT/EP2013/062030
Filing Date :11/06/2013
(87) International Publication No :WO 2013/186211
(61) Patent of Addition to Application Number :NA
Filing Date :NA
(62) Divisional to Application Number :NA
Filing Date :NA

(71)**Name of Applicant :**
1)WOBBEN PROPERTIES GMBH
Address of Applicant :Dreekamp 5 26605 Aurich Germany
(72)**Name of Inventor :**
1)STOLTENJOHANNES J¼rgen
2)BOHLEN Werner Hinrich
3)MELI William

(57) Abstract :
The invention relates to a wind turbine (100) comprising a nacelle (104) and a rotor (106) a first and/or second microwave and/or radar measuring unit (1100,1200) for emitting microwaves and/or radar waves and for detecting the reflections of the microwaves and/or radar waves in order to record wind data and/or meteorological data or information regarding a wind field in front of and/or behind the wind turbine and a controller of the wind turbine which controls the operation of the wind turbine (100) in dependence on the data recorded by the first and/or second measuring unit (1100,1200).

No. of Pages : 28 No. of Claims : 8

(12) PATENT APPLICATION PUBLICATION
(21) Application No.10690/DELNP/2014 A
(19) INDIA
(22) Date of filing of Application :15/12/2014
(43) Publication Date : 28/08/2015

(54) Title of the invention : CASTING MOLD AND CAST ARTICLE PRODUCED USING THE SAME

(51) International classification :B22D17/10,B22C3/00,B22C9/06
(31) Priority Document No :2012178870
(32) Priority Date :10/08/2012
(33) Name of priority country :Japan
(86) International Application No :PCT/IB2013/001697
Filing Date :02/08/2013
(87) International Publication No :WO 2014/024021
(61) Patent of Addition to Application Number :NA
Filing Date :NA
(62) Divisional to Application Number :NA
Filing Date :NA

(71)**Name of Applicant :**
1)TOYOTA JIDOSHA KABUSHIKI KAISHA
Address of Applicant :1 Toyota cho Toyota shi Aichi ken 471 8571 Japan
(72)**Name of Inventor :**
1)KOYAMA Tomohiro
2)OZAKI Motoaki
3)FURUKAWA Yuichi
4)SOTOZAKI Shuji
5)WAKAI Hiroaki

(57) Abstract :
A casting mold includes a carbon film with which at least a surface of the casting mold which forms a cavity is covered and mold oil with which a surface of the carbon film is coated. In the casting mold aluminum powder is added to the mold oil.

No. of Pages : 22 No. of Claims : 7

(12) PATENT APPLICATION PUBLICATION
(19) INDIA
(22) Date of filing of Application :15/12/2014
(21) Application No.10691/DELNP/2014 A
(43) Publication Date : 28/08/2015

(54) Title of the invention : METABOLITES OF (1R-TRANS)-N-[[2-(2,s-DIHYDRO-4-BENZOFURANn)CYCLOPROPYL]METHYL]PROPANAMIDE

(51) International classification :C07C233/18,C07C233/47,A61K31/165
(31) Priority Document No :61/649220
(32) Priority Date :18/05/2012
(33) Name of priority country :U.S.A.
(86) International Application No:PCT/US2013/041573
Filing Date :17/05/2013
(87) International Publication No :WO 2013/173707
(61) Patent of Addition to Application Number :NA
Filing Date :NA
(62) Divisional to Application Number :NA
Filing Date :NA

(71)**Name of Applicant :**
1)VANDA PHARMACEUTICALS INC.
Address of Applicant :Suite 300 e 2200 Pennsylvania Ave Nw Washington DC 20037 U.S.A.
(72)**Name of Inventor :**
1)DRESSMAN Marlene Michelle
2)PHADKE Deepak

(57) Abstract :
Isolated metabolites of (1 R trans) N [[2 (2 3 dihydro 4 benzofuranyl)cyclopropyl] methyl]propanamide methods for their use and compositions containing the metabolites.

No. of Pages : 18 No. of Claims : 10

(12) PATENT APPLICATION PUBLICATION
(21) Application No.10696/DELNP/2014 A
(19) INDIA
(22) Date of filing of Application :15/12/2014
(43) Publication Date : 28/08/2015

(54) Title of the invention : UPDATE OF SECURITY FOR GROUP BASED FEATURE IN M2M

(51) International classification :H04W4/00,H04L29/06,H04W12/08
(31) Priority Document No :2012147983
(32) Priority Date :29/06/2012
(33) Name of priority country :Japan
(86) International Application No :PCT/JP2013/002661
Filing Date :19/04/2013
(87) International Publication No :WO 2014/002351
(61) Patent of Addition to Application Number :NA
Filing Date :NA
(62) Divisional to Application Number :NA
Filing Date :NA

(71)**Name of Applicant :**
1)NEC CORPORATION
Address of Applicant :7 1 Shiba 5 chome Minato ku Tokyo 1088001 Japan
(72)**Name of Inventor :**
1)ZHANG Xiaowei
2)PRASAD Anand Raghawa

(57) Abstract :
A network node (21) which is placed within a core network receives a message from a transmission source (30) placed outside the core network. The message includes an indicator indicating whether or not the message is addressed to a group of one or more MTC devices attached to the core network. The network node (21) determines to authorize the transmission source (30) when the indicator indicates that the message is addressed to the group. Further the message includes an ID for identifying whether or not the message is addressed to the group. The MTC device determines to discard the message when the ID does not coincide with an ID allocated for the MTC device itself. Furthermore the MTC device communicates with the transmission source (30) by use of a pair of group keys shared therewith.

No. of Pages : 29 No. of Claims : 23

(12) PATENT APPLICATION PUBLICATION
(21) Application No.10697/DELNP/2014 A
(19) INDIA
(22) Date of filing of Application :15/12/2014
(43) Publication Date : 28/08/2015

(54) Title of the invention : RUBBER COMPOSITION FOR TIRE TREADS

(51) International classification :C08L9/06,C08C19/25,C08L15/00
(31) Priority Document No :2012148064
(32) Priority Date :30/06/2012
(33) Name of priority country :Japan
(86) International Application No :PCT/JP2013/065513
Filing Date :04/06/2013
(87) International Publication No :WO 2014/002706
(61) Patent of Addition to Application Number :NA
Filing Date :NA
(62) Divisional to Application Number :NA
Filing Date :NA

(71)**Name of Applicant :**
1)BRIDGESTONE CORPORATION
Address of Applicant :10 1 Kyobashi 1 chome Chuo ku Tokyo 1048340 Japan
(72)**Name of Inventor :**
1)KAWASHIMA Keisuke

(57) Abstract :
The present invention is a rubber composition for tire treads which is characterized in that: the temperature at the peak position of the temperature curve of tan d is within the range from 16.0°C to 6.0°C (inclusive); tan d at the peak position is larger than 1.13; tan d at 0°C is 0.95 or more; and the value obtained by dividing the absolute value of the difference between tan d at 5°C and tan d at 5°C by the temperature difference between 5°C and 5°C namely {|(tan d at 5°C) (tan d at 5°C)|/10} (/°C) is smaller than 0.045/°C. Specifically a rubber composition for tire treads which contains a filler and a rubber component that contains at least two kinds of styrene butadiene copolymer rubbers having different bonded styrene contents and which is characterized in that: the difference between the bonded styrene content (St(A)) of a styrene butadiene copolymer rubber (A) having a higher bonded styrene content and the bonded styrene content (St(B)) of a styrene butadiene copolymer rubber (B) having a lower bonded styrene content namely {St(A) St(B)} is 6 22% by mass; tan d at 0°C is 0.95 or more; and the value obtained by dividing the absolute value of the difference between tan d at 5°C and tan d at 5°C by the temperature difference between 5°C and 5°C namely {|(tan d at 5°C) (tan d at 5°C)|/10} (/°C) is smaller than 0.045/°C. The present invention provides a rubber composition for tire treads which achieves a better balance between low heat generation properties and wet braking performance.

No. of Pages : 49 No. of Claims : 7

(12) PATENT APPLICATION PUBLICATION
(21) Application No.10698/DELNP/2014 A
(19) INDIA
(22) Date of filing of Application :15/12/2014
(43) Publication Date : 28/08/2015

(54) Title of the invention : SYSTEM AND METHOD OF GREYWATER RECOVERY AND REUSE

(51) International classification :C02F9/04,C02F1/00,C02F1/50
(31) Priority Document No :2779705
(32) Priority Date :06/06/2012
(33) Name of priority country :Canada
(86) International Application No :PCT/CA2013/000551
Filing Date :05/06/2013
(87) International Publication No :WO 2013/181747
(61) Patent of Addition to Application Number :NA
Filing Date :NA
(62) Divisional to Application Number :NA
Filing Date :NA

(71)**Name of Applicant :**
1)CANPLAS INDUSTRIES LTD.
Address of Applicant :31 Patterson Road P.O. Box 1800 Barrie Ontario L4M 4V3 Canada
(72)**Name of Inventor :**
1)ROBB Carl L.
2)BALDWIN N. Scott
3)MANTYLA James Brian
4)GAY Stacey Charleen
5)POUPORE Timothy James Hendrie
6)VAN KAMPEN Leo Peter
7)WILSON Michael F.

(57) Abstract :
A greywater recovery and reuse system is shown including a body for collecting conditioning and discharging greywater. The body has an inlet connection to a source of greywater; a filter for filtering the greywater; a tank for receiving the filtered greywater; a disinfector for disinfecting the filtered greywater; a pump for discharging the conditioned greywater from said tank to a toilet that needs flushing water; a discharge connection to a sanitary sewer system; a fresh water connection and a control system for controlling the operation of the greywater recovery and reuse system. The system includes a controller for operating the system and dealing with certain alarm and status conditions. Methods of operating the system are also comprehended.

No. of Pages : 51 No. of Claims : 62

(12) PATENT APPLICATION PUBLICATION
(21) Application No.10585/DELNP/2014 A
(19) INDIA
(22) Date of filing of Application :11/12/2014
(43) Publication Date : 28/08/2015

(54) Title of the invention : OPTIMISED VERTICAL SHAFT KILN FOR PRODUCING SULFOALUMINOUS CLINKER

(51) International classification :F27B1/00,F27B1/21,C04B2/12
(31) Priority Document No :12/56891
(32) Priority Date :17/07/2012
(33) Name of priority country :France
(86) International Application No :PCT/FR2013/051682
Filing Date :12/07/2013
(87) International Publication No :WO 2014/013171
(61) Patent of Addition to Application Number :NA
Filing Date :NA
(62) Divisional to Application Number :NA
Filing Date :NA

(71)**Name of Applicant :**
1)VICAT
Address of Applicant :Tour Manhattan 6 Place de lIris F 92095 Paris La Defense France
(72)**Name of Inventor :**
1)JACOB Yvan Pierre
2)PASQUIER Michel
3)RENIE Dominique
4)BEAUVENT Guy

(57) Abstract :
The invention relates to a vertical shaft kiln (2) for producing a clinker comprising a tubular enclosure (4) comprising from top to bottom: a feeding section (14); a decarbonatation section (16) having an inclined inner surface (16a); a clinkerisation section (18) having an inclined inner surface (18a); a first collection section (20); first extraction means (42) arranged in such a way as to extract the clinker from the first collection section (20); means for generating a first gas having a temperature of between 950°C and 1250°C and for feeding same into the decarbonatation section (16); means for generating a second oxidising gas having a temperature of between 1250°C and 1450°C and for feeding same into the clinkerisation section (18); and first means for the intake of the first and second gases from the feeding section (14).

No. of Pages : 29 No. of Claims : 17

(12) PATENT APPLICATION PUBLICATION
(19) INDIA
(22) Date of filing of Application :11/12/2014
(21) Application No.10586/DELNP/2014 A
(43) Publication Date : 28/08/2015

(54) Title of the invention : SLIDE TYPE EXTRACTOR

(51) International classification :F27D3/06,F27B1/21,F27B7/33
(31) Priority Document No :12/56892
(32) Priority Date :17/07/2012
(33) Name of priority country :France
(86) International Application No :PCT/FR2013/051679
Filing Date :12/07/2013
(87) International Publication No :WO 2014/013169
(61) Patent of Addition to Application Number :NA
Filing Date :NA
(62) Divisional to Application Number :NA
Filing Date :NA

(71)**Name of Applicant :**
1)VICAT
Address of Applicant :Tour Manhattan 6 Place de lIris F 92095 Paris La Defense France
(72)**Name of Inventor :**
1)DE LA FOUCHARDIERE Ren
2)GAUDENZI Frdric
3)PASERI Jean Denis
4)BEAUVENT Guy

(57) Abstract :
The invention relates to a device (30) for extracting and transferring high temperature granular mineral materials contained in a first chamber comprising a fixed upper part (32) and a mobile lower part (34) delimiting a duct (36) the mobile lower part (34) being movable in a given direction (50) between a forward position and a recoiled position and vice versa so as to allow the granular mineral materials to flow in the duct (36). The device further comprises means (78 80) for moving and guiding the mobile part (34) relative to the fixed part (32). The fixed part (32) and the mobile part (34) each comprise an outer jacket (38; 58) made of metal and an inner jacket (40; 60) made by stacking at least a first coating (42; 62) made of a thermally insulating material mounted on the metal outer jacket (38; 58) and a second coating (44; 64) made of a refractory material mounted on the first coating (42; 62).

No. of Pages : 17 No. of Claims : 10

(12) PATENT APPLICATION PUBLICATION
(21) Application No.10587/DELNP/2014 A
(19) INDIA
(22) Date of filing of Application :11/12/2014
(43) Publication Date : 28/08/2015

(54) Title of the invention : ELECTRICAL CONNECTION TERMINAL

(51) International classification :H01R4/48
(31) Priority Document No :10 2012 011 794.9
(32) Priority Date :15/06/2012
(33) Name of priority country :Germany
(86) International Application No :PCT/EP2013/001662
Filing Date :06/06/2013
(87) International Publication No :WO 2013/185893
(61) Patent of Addition to Application Number :NA
Filing Date :NA
(62) Divisional to Application Number :NA
Filing Date :NA

(71)**Name of Applicant :**
1)PHOENIX CONTACT GMBH & CO. KG
Address of Applicant :flachsmarktstrasse 8 32825 Blomberg Germany
(72)**Name of Inventor :**
1)HOPPMANN Ralph
2)GEBHARDT Martin

(57) Abstract :
The subject matter of the invention is an electrical connection terminal comprising a housing (1) having a conductor insertion opening (2a, 2b) a busbar (3) arranged in the housing (1) a spring element (4a, 4b) which is mounted rotatably in the housing (1) and which is pivotable into an open position and into a closed position wherein in the closed position a conductor inserted into the conductor insertion opening (2a, 2b) can be clamped against the busbar (3) by means of the spring element (4a, 4b) and an actuating element (15a, 15b) which is mounted rotatably in the housing (1) and has an actuating arm (18a, 18b) and by means of which the spring element (4a, 4b) can be actuated so as to be transferred into the open position and into the closed position wherein the actuating element (15a, 15b) has a clearance (19a, 19b) matched to the spring element (4a, 4b) into which clearance the spring element (4a, 4b) can be pivoted during a pivoting movement from the closed position into the open position without a rotary movement of the actuating element (15a, 15b) being triggered.

No. of Pages : 20 No. of Claims : 7

(12) PATENT APPLICATION PUBLICATION
(21) Application No.2304/DELNP/2015 A
(19) INDIA
(22) Date of filing of Application :20/03/2015
(43) Publication Date : 28/08/2015

(54) Title of the invention : WIRELESS COMMUNICATION SYSTEM WIRELESS STATION WIRELESS TERMINAL NETWORK DEVICE BEARER CONTROL METHOD AND COMPUTER READABLE MEDIUM

(51) International classification :H04W72/04,H04W28/16
(31) Priority Document No :2012223178
(32) Priority Date :05/10/2012
(33) Name of priority country :Japan
(86) International Application No :PCT/JP2013/003805
Filing Date :19/06/2013
(87) International Publication No :WO 2014/054202
(61) Patent of Addition to Application Number :NA
Filing Date :NA
(62) Divisional to Application Number :NA
Filing Date :NA

(71)**Name of Applicant :**
1)NEC CORPORATION
Address of Applicant :7 1 Shiba 5 chome Minato ku Tokyo 1088001 Japan
(72)**Name of Inventor :**
1)NEC CORPORATION

(57) Abstract :
A wireless terminal (3) has a function in which a second wireless connection in a second cell (20) operated by a second wireless station (2) is established while a first wireless connection in a first cell (10) operated by a first wireless station (1) is being established. The first wireless station (1) sets a control bearer for forwarding a control signal related to at least the wireless terminal (3) between a higher level network (4) and the first wireless station (1). In addition the first wireless station (1) is configured so as to trigger a second bearer setting for forwarding user data of the wireless terminal (3) between the higher level network (4) and the second wireless station (2). Thus bearers can be simultaneously set for a plurality of wireless stations for one wireless terminal in order to achieve carrier aggregation of a plurality of cells operated by different wireless stations for example.

No. of Pages : 90 No. of Claims : 57

(12) PATENT APPLICATION PUBLICATION
(21) Application No.10668/DELNP/2014 A
(19) INDIA
(22) Date of filing of Application :15/12/2014
(43) Publication Date : 28/08/2015

(54) Title of the invention : METHOD FOR PRODUCING A MONO N ALKYL PIPERAZINE

(51) International classification :C07D295/088
(31) Priority Document No :12170580.0
(32) Priority Date :01/06/2012
(33) Name of priority country :EPO
(86) International Application No :PCT/EP2013/061092
Filing Date :29/05/2013
(87) International Publication No :WO 2013/178693
(61) Patent of Addition to Application Number :NA
Filing Date :NA
(62) Divisional to Application Number :NA
Filing Date :NA

(71)**Name of Applicant :**
1)BASF SE
Address of Applicant :67056 Ludwigshafen Germany
(72)**Name of Inventor :**
1)BOU CHEDID Roland
2)MELDER Johann Peter
3)ABEL Ulrich
4)DOSTALEK Roman
5)STEIN Bernd

(57) Abstract :
The invention relates to a method for producing a mono-N-alkyl piperazine of formula (I), where Rl represents Cl - C5 alkyl or 2-(2-hydroxy-ethoxy) ethyl, by reacting diethanolamine (DEOA) of formula (II) with a primary amine of formula H 2NR1 (III) in the presence of hydrogen and a catalyst moulded body. The reaction is carried out in the liquid phase at an absolute pressure ranging from 150 to 250 bar and the amination is carried out using a catalyst moulded body, the precursor of which can be produced according to a method in which (i) an oxidic material comprising copper oxide, aluminium oxide and lanthanum oxide is provided, (ii) powdered metallic copper and or copper flakes and optionally graphite are added to the oxidic material, (iii) the mixture resulting from step (ii) is moulded into a moulded body. The oxidic material can be obtained by the simultaneous or successive precipitation of the components copper oxide, aluminium oxide and lanthanum oxide and by subsequent drying and calcination and the catalyst moulded body is calcined once again after the moulding process in step (iii).

No. of Pages : 23 No. of Claims : 32

(12) PATENT APPLICATION PUBLICATION
(19) INDIA
(22) Date of filing of Application :15/12/2014
(21) Application No.10669/DELNP/2014 A
(43) Publication Date : 28/08/2015

(54) Title of the invention : PRO DRUG COMPOUNDS

(51) International classification :C07D311/68
(31) Priority Document No :1211788.3
(32) Priority Date :03/07/2012
(33) Name of priority country :U.K.
(86) International Application No :PCT/GB2013/051767
Filing Date :03/07/2013
(87) International Publication No :WO 2014/006407
(61) Patent of Addition to Application Number :NA
Filing Date :NA
(62) Divisional to Application Number :NA
Filing Date :NA

(71)**Name of Applicant :**
1)PROXIMAGEN LIMITED
Address of Applicant :3rd Floor 91 93 Farringdon Road London EC1M 3LN U.K.
(72)**Name of Inventor :**
1)SAVORY Edward
2)PRITCHARD Martyn
3)ASHWOOD Mike

(57) Abstract :
A compound of formula (I), or a pharmaceutically acceptable salt thereof: wherein Z1, Z2, and Z , Q, R2, A, and R1 are as defined in the claims.

No. of Pages : 47 No. of Claims : 18

(12) PATENT APPLICATION PUBLICATION
(19) INDIA
(22) Date of filing of Application :15/12/2014
(21) Application No.10670/DELNP/2014 A
(43) Publication Date : 28/08/2015

(54) Title of the invention : DEUTERATED DERIVATIVES OF RUXOLITINIB

(51) International classification :C07D487/04,C07B59/00,A61K31/519
(31) Priority Document No :61/660428
(32) Priority Date :15/06/2012
(33) Name of priority country :U.S.A.
(86) International Application No :PCT/US2013/045919
Filing Date :14/06/2013
(87) International Publication No :WO 2013/188783
(61) Patent of Addition to Application Number :NA
Filing Date :NA
(62) Divisional to Application Number :NA
Filing Date :NA

(71)**Name of Applicant :**
1)CONCERT PHARMACEUTICALS INC.
Address of Applicant :99 Hayden Avenue Suite 500 Lexington MA 02421 U.S.A.
(72)**Name of Inventor :**
1)SILVERMAN I. Robert
2)LIU Julie F.
3)MORGAN Adam J.
4)PANDYA Bhaumik
5)HARBESON Scott L.

(57) Abstract :
The present invention in one embodiment provides a compound of Formula A: or a pharmaceutically acceptable salt thereof; pharmaceutical compositions comprising the compound; and methods of treating the indications disclosed herein.

No. of Pages : 45 No. of Claims : 25

(12) PATENT APPLICATION PUBLICATION
(21) Application No.10671/DELNP/2014 A
(19) INDIA
(22) Date of filing of Application :15/12/2014
(43) Publication Date : 28/08/2015

(54) Title of the invention : A MEASURING DEVICE FOR A DRILL

(51) International classification :A61B17/16,G01D5/14
(31) Priority Document No :13/472926
(32) Priority Date :16/05/2012
(33) Name of priority country :U.S.A.
(86) International Application No :PCT/US2013/040086
Filing Date :08/05/2013
(87) International Publication No :WO 2013/173138
(61) Patent of Addition to Application Number :NA
Filing Date :NA
(62) Divisional to Application Number :NA
Filing Date :NA

(71)**Name of Applicant :**
1)SYNTHES GMBH
Address of Applicant :Eimattstrasse 3 CH 4436 Oberdorf Switzerland
(72)**Name of Inventor :**
1)BAUMGARTNER Adrian

(57) Abstract :
A measuring device 1 configured to receive a drill bit 3 and determine the relative displacement of the drill bit 3 is disclosed. The measuring device 1 is configured to be deployed proximate to the material to be drilled reset and subsequently determine the relative displacement of the drill bit 3. The measuring device 1 can be used in orthopaedic surgery procedures for determining the depth of a bore hole in bone.

No. of Pages : 18 No. of Claims : 38

(12) PATENT APPLICATION PUBLICATION
(21) Application No.10672/DELNP/2014 A
(19) INDIA
(22) Date of filing of Application :15/12/2014
(43) Publication Date : 28/08/2015

(54) Title of the invention : RISPERIDONE OR PALIPERIDONE IMPLANT FORMULATION

(51) International classification :A61K47/34
(31) Priority Document No :12170362.3
(32) Priority Date :31/05/2012
(33) Name of priority country :EPO
(86) International Application No :PCT/EP2013/061320
Filing Date :31/05/2013
(87) International Publication No :WO 2013/178812
(61) Patent of Addition to Application Number :NA
Filing Date :NA
(62) Divisional to Application Number :NA
Filing Date :NA

(71)**Name of Applicant :**
1)LABORATORIOS FARMAC‰UTICOS ROVI S.A.
Address of Applicant :C/ Juli¡n Camarillo 35 E 28037 Madrid Spain
(72)**Name of Inventor :**
1)GUTIERRO ADURIZ Ibon
2)FRANCO RODR • GUEZ Guillermo

(57) Abstract :
The present invention is directed to an injectable intramuscular depot composition suitable for forming an in situ solid implant in a body, comprising a drug which is risperidone and/or paliperidone or any pharmaceutically acceptable salt thereof in any combination, a biocompatible copolymer based on lactic and glycolic acid having a monomer ratio of lactic to glycolic acid of about 50:50 and a DMSO solvent, wherein the composition releases the drug with an immediate onset of action and continuously for at least 4 weeks and wherein the composition has a pharmacokinetic profile in vivo that makes it suitable to be administered each 4 weeks or even longer periods.

No. of Pages : 43 No. of Claims : 16

(12) PATENT APPLICATION PUBLICATION
(21) Application No.2320/DELNP/2015 A
(19) INDIA
(22) Date of filing of Application :21/03/2015
(43) Publication Date : 28/08/2015

(54) Title of the invention : DECOUPLER WITH FREE WHEEL SYSTEM AND VIBRATION DAMPENING

(51) International classification :F16D41/20
(31) Priority Document No :BR10201200228033
(32) Priority Date :10/09/2012
(33) Name of priority country :Brazil
(86) International Application No :PCT/BR2013/000349
Filing Date :09/09/2013
(87) International Publication No :WO 2014/036625
(61) Patent of Addition to Application Number :NA
Filing Date :NA
(62) Divisional to Application Number :NA
Filing Date :NA

(71)**Name of Applicant :**
1)ZEN S/A INDšSTRIA METALšRGICA
Address of Applicant :rua Guilherme Steffen 65, 88355- 100 Brusque SC Brazil
(72)**Name of Inventor :**
1)CANTO MICHELOTTI, Alvaro;

(57) Abstract :
The present invention relates to a decoupler with a free wheel system and vibration dampening comprising a pulley (2), a shaft (7) that can be driven by the pulley (2), an axle hub (30) with a first hub part (4) and a second hub part (6), where the axle hub (30) is coupled between the inner race of the pulley (2) and the outer surface of the axle (7), at least one bearing element between the axle (7) and the pulley (2), a torsion spring (3) and a clutch spring (5), the first axle hub part (4) being mounted on the axle (7) and the second axle hub part (6) being mounted on the axle (7) so as to be rotatable about the axle (7), the torsion spring (3) is arranged between the outer race of the axle hub (30) and the inner race of the pulley (2), with a first end that can be functionally coupled to the pulley (2) and a second end that can be functionally coupled to the second axle hub part (6) , and the clutch spring (5) is arranged inside the torsion spring and can be frictionally coupled to the axle hub (30) in order to transmit torque to the axle (7).

No. of Pages : 42 No. of Claims : 26

(12) PATENT APPLICATION PUBLICATION
(21) Application No.10678/DELNP/2014 A
(19) INDIA
(22) Date of filing of Application :15/12/2014
(43) Publication Date : 28/08/2015

(54) Title of the invention : A METHOD OF OPERATING A WIND TURBINE AS WELL AS A SYSTEM SUITABLE THEREOF

(51) International classification	:F03D7/02,F03D9/00	(71)**Name of Applicant :**
(31) Priority Document No	:PA 2012 70440	**1)VESTAS WIND SYSTEMS A/S**
(32) Priority Date	:19/07/2012	Address of Applicant :Hedeager 44 DK 8200 Aarhus N Denmark
(33) Name of priority country	:Denmark	(72)**Name of Inventor :**
(86) International Application No	:PCT/DK2013/050237	**1)GUPTA Amit Kumar**
Filing Date	:12/07/2013	**2)PRATAMA Ryan Arya**
(87) International Publication No	:WO 2014/012553	
(61) Patent of Addition to Application Number	:NA	
Filing Date	:NA	
(62) Divisional to Application Number	:NA	
Filing Date	:NA	

(57) Abstract :
A method of operating a wind turbine is provided. The wind turbine comprises a turbine rotor with at least one blade having a variable pitch angle a power generator and a power converter connected to the power generator via a first circuit breaker and to a power grid via a second circuit breaker. According to the method overvoltage events at the power grid are monitored. If an overvoltage event is detected the method comprises opening the first circuit breaker and the second circuit breaker disabling active operation of the power converter connecting a power dissipating unit to the power generator to dissipate power output from the power generator and moving the pitch angle of the at least one blade towards a feathered position.

No. of Pages : 34 No. of Claims : 16

(12) PATENT APPLICATION PUBLICATION
(19) INDIA
(22) Date of filing of Application :15/12/2014

(21) Application No.10679/DELNP/2014 A
(43) Publication Date : 28/08/2015

(54) Title of the invention : WIND TURBINE CONTROL

(51) International classification :F03D7/02
(31) Priority Document No :61/657048
(32) Priority Date :08/06/2012
(33) Name of priority country :U.S.A.
(86) International Application No :PCT/DK2013/050173
Filing Date :06/06/2013
(87) International Publication No :WO 2013/182201
(61) Patent of Addition to Application Number :NA
Filing Date :NA
(62) Divisional to Application Number :NA
Filing Date :NA

(71)**Name of Applicant :**
1)VESTAS WIND SYSTEMS A/S
Address of Applicant :Hedeager 44 DK 8200 Aarhus N Denmark
(72)**Name of Inventor :**
1)SIMONSEN Kenneth Tougaard
2)ROSENVARD Paw
3)STEELE David

(57) Abstract :
The present invention relates to methods apparatus and computer program products for controlling a wind turbine that comprises a nacelle and one or more turbine blades to reduce or prevent edgewise vibrations building up on the one or more turbine blades. It is identified 202 whether the nacelle is unable to yaw to an upwind position and initiating a corrective action 203 to prevent edgewise vibrations building up on the one or more turbine blades if the nacelle is unable to yaw to an upwind position.

No. of Pages : 17 No. of Claims : 13

(12) PATENT APPLICATION PUBLICATION
(21) Application No.10680/DELNP/2014 A
(19) INDIA
(22) Date of filing of Application :15/12/2014
(43) Publication Date : 28/08/2015

(54) Title of the invention : COMPOSITIONS AND METHODS FOR TREATING OR PREVENTING PNEUMOVIRUS INFECTION AND ASSOCIATED DISEASES

(51) International classification :C07D257/04
(31) Priority Document No :61/666258
(32) Priority Date :29/06/2012
(33) Name of priority country :U.S.A.
(86) International Application No :PCT/US2013/048723
Filing Date :28/06/2013
(87) International Publication No :WO 2014/005098
(61) Patent of Addition to Application Number :NA
Filing Date :NA
(62) Divisional to Application Number :NA
Filing Date :NA

(71)**Name of Applicant :**
1)MICRODOSE THERAPEUTX INC.
Address of Applicant :4262 US Route 1 Monmouth Junction NJ 08852 1947 U.S.A.
(72)**Name of Inventor :**
1)COOK Robert O.
2)REYNOLDS Eugene R.
3)SHEKUNOV Boris
4)ZEGAR Siead I.

(57) Abstract :
The present invention provides novel crystalline polymorphic forms of MDT 637 in particular crystalline polymorphic forms with physicochemical properties specifically suited for drug production amorphous formation composite form and methods of preparation thereof. The novel polymorphs described herein are useful for the treatment of respiratory disease such as disease caused by respiratory syncytial virus.

No. of Pages : 82 No. of Claims : 20

(12) PATENT APPLICATION PUBLICATION
(21) Application No.2324/DELNP/2015 A
(19) INDIA
(22) Date of filing of Application :21/03/2015
(43) Publication Date : 28/08/2015

(54) Title of the invention : ADDITIVE MANUFACTURE OF TURBINE COMPONENT WITH MULTIPLE MATERIALS

(51) International classification :B22F3/105,B22F5/00,B22F5/04
(31) Priority Document No :61/710995
(32) Priority Date :08/10/2012
(33) Name of priority country :U.S.A.
(86) International Application No :PCT/US2013/063641
Filing Date :07/10/2013
(87) International Publication No :WO 2014/107204
(61) Patent of Addition to Application Number :NA
Filing Date :NA
(62) Divisional to Application Number :NA
Filing Date :NA

(71)**Name of Applicant :**
1)SIEMENS AKTIENGESELLSCHAFT
Address of Applicant :Wittelsbacherplatz 2, 80333 M¼nchen Germany
(72)**Name of Inventor :**
1)SUBRAMANIAN, Ramesh;
2)OTT, Michael;
3)THOMAIDIS, Dimitrios;
4)SADOVOY, Alexandr;
5)MUNZER, Jan;

(57) Abstract :
A method for additive manufacturing with multiple materials. First (48) , second (50), and third (52) adjacent powder layers are delivered onto a working surface (54A) in respective first (73) , second (74) , and third (75) area shapes of adjacent final materials (30 , 44 , 45) in a given section plane of a component (20). The first powder may be a structural metal delivered in the sectional shape of an airfoil substrate (30). The second powder may be a bond coat material delivered in a sectional shape of a bond coat (45) on the substrate. The third powder may be a thermal barrier ceramic delivered in a section shape of the thermal barrier coating (44). A particular laser intensity (69A, 69B) is applied to each layer to melt or to sinter the layer. Integrated interfaces (57 , 77 , 80) may be formed between adjacent layers by gradient material overlap and/or interleaving projections.

No. of Pages : 21 No. of Claims : 20

(12) PATENT APPLICATION PUBLICATION
(19) INDIA
(22) Date of filing of Application :23/03/2015
(21) Application No.2325/DELNP/2015 A
(43) Publication Date : 28/08/2015

(54) Title of the invention : PROCESS FOR PREPARING DIAMINOPHENOTHIAZINIUM COMPOUNDS

(51) International classification	:C07D 279/20, A61K 31/5415
(31) Priority Document No	:0606330
(32) Priority Date	:12/07/2006
(33) Name of priority country	:France
(86) International Application No	:PCT/FR2007/001193
Filing Date	:12/07/2007
(87) International Publication No	: NA
(61) Patent of Addition to Application Number	:NA
Filing Date	:NA
(62) Divisional to Application Number	:443/DELNP/2009
Filed on	:19/01/2009

(71)**Name of Applicant :**
1)PROVENCE TECHNOLOGIES
Address of Applicant :H´tel Technologique, Technop´le de Chteau-Gombert, 13382 MARSEILLE CEDEX 13, France France
(72)**Name of Inventor :**
1)FERAUD, Michel
2)SAYAH, Babak

(57) Abstract :
Process for preparing compounds of the diaminophenothiazinium type comprising a step for purification of derivatives (II). The products resulting from this process have a high degree of purity. Use of these compounds for the preparation of medicaments.

No. of Pages : 26 No. of Claims : 18

(12) PATENT APPLICATION PUBLICATION
(21) Application No.10700/DELNP/2014 A
(19) INDIA
(22) Date of filing of Application :15/12/2014
(43) Publication Date : 28/08/2015

(54) Title of the invention : ANALYSIS SYSTEM AND ASSOCIATED METHOD OF HANDLING AND ANALYSING DISCRETE MINERAL SAMPLES

(51) International classification :B65G47/26
(31) Priority Document No :2012902164
(32) Priority Date :25/05/2012
(33) Name of priority country :Australia
(86) International Application No :PCT/AU2013/000554
Filing Date :24/05/2013
(87) International Publication No :WO 2013/173883
(61) Patent of Addition to Application Number :NA
Filing Date :NA
(62) Divisional to Application Number :NA
Filing Date :NA

(71)**Name of Applicant :**
1)TECHNOLOGICAL RESOURCES PTY. LIMITED
Address of Applicant :120 Collins Street, Melbourne, Victoria 3000 Australia
(72)**Name of Inventor :**
1)CARTER Geoffery Alan
2)WILLIAMS Ross Peter
3)GREEN Craig

(57) Abstract :
A self contained stand alone elemental composition analysis system (10) comprises an analyser (12) and a mineral sample and transport handling system (14). The analyser (12) is capable of providing data relating to the elemental composition of a mineral sample. The transport system (14) operates in association with the analyser (12) so as to transport discrete mineral samples from a sample inlet port (16) to the analyser (12) and subsequently transport the analysed mineral samples as discrete samples to a sample outlet port (18). The transport system (14) is constituted by an inlet conveyor system (20) that is arranged to transport discrete mineral samples from the inlet port (16) to an analyser inlet (15); and a separate outlet conveyor system (22) which is arranged to transport discrete mineral samples after analysis from an analyser output or discharge to the outlet port (18). The system (10) enables discrete samples emptied from a specific container or bag to be returned in that same container or bag thereby minimising the risk of contamination with other samples.

No. of Pages : 45 No. of Claims : 37

(12) PATENT APPLICATION PUBLICATION
(21) Application No.10701/DELNP/2014 A
(19) INDIA
(22) Date of filing of Application :15/12/2014
(43) Publication Date : 28/08/2015

(54) Title of the invention : INPUT APPARATUS DISPLAY APPARATUS AND METHODS FOR CONTROLLING A DISPLAY THROUGH USER MANIPULATION

(51) International classification :G06F3/01,G06F3/048
(31) Priority Document No :1020120052402
(32) Priority Date :17/05/2012
(33) Name of priority country :Republic of Korea
(86) International Application No :PCT/KR2013/003415
Filing Date :22/04/2013
(87) International Publication No :WO 2013/172558
(61) Patent of Addition to Application Number :NA
Filing Date :NA
(62) Divisional to Application Number :NA
Filing Date :NA

(71)**Name of Applicant :**
1)SAMSUNG ELECTRONICS CO. LTD.
Address of Applicant :129 Samsung ro Yeongtong gu Suwon si Gyeonggi do 443 742 Republic of Korea
(72)**Name of Inventor :**
1)LEE Dong heon
2)KWON Yong hwan

(57) Abstract :
An input apparatus of a display apparatus is provided. The input apparatus includes a touch sensor which senses a touch by a user; a motion sensor which senses a motion of the input apparatus; a communication unit which communicates with the display apparatus; and a controller which transmits a first control signal which corresponds to a motion sensed by the motion sensor through the communication unit to scroll an image displayed in the display apparatus in response to the motion sensor sensing the motion and transmits a second control signal which corresponds to a touch sensed by the touch sensor through the communication unit to move an object within the scrolled image in response to the touch sensor sensing the touch.

No. of Pages : 31 No. of Claims : 15

(12) PATENT APPLICATION PUBLICATION
(21) Application No.1362/DEL/2012 A
(19) INDIA
(22) Date of filing of Application :04/05/2012
(43) Publication Date : 28/08/2015

(54) Title of the invention : NOVEL ORGANIC MATERIALS AND THEIR APPLICATION IN CHARGE TRANSPORT

(51) International classification :C07C
(31) Priority Document No :NA
(32) Priority Date :NA
(33) Name of priority country :NA
(86) International Application No :NA
Filing Date :NA
(87) International Publication No :NA
(61) Patent of Addition to Application Number :NA
Filing Date :NA
(62) Divisional to Application Number :NA
Filing Date :NA

(71)**Name of Applicant :**
1)COUCIL OF SCIENTIFIC & INDUSTRIAL RESEARCH
Address of Applicant :ANUSANDHAN BHAWAN, RAFI MARG, NEW DELHI-110 001, INDIA. Delhi India
(72)**Name of Inventor :**
1)KOTHANDAM KRISHNAMOORTHY
2)ARULRAJ ARULKASHMIR
3)BHAN PRAKASH JAIN

(57) Abstract :
The invention disclosed nanostructured organic materials and a process for the preparation thereof. Further the present invention herein provides nanostructured organic material comprising divalent zinc metal, complex of N, N-Di-(phenyl-3,5 dicarboxylic acid)-perylene-3,4,9,10-tetracarboxylic acid diimide doped with hydrazine hydrate, which exhibits increased charge carrier mobility at Low operating voltage at atmospheric condition useful in organic field effect transistors (OFETs).

No. of Pages : 30 No. of Claims : 10

(12) PATENT APPLICATION PUBLICATION
(19) INDIA
(22) Date of filing of Application :23/03/2015
(21) Application No.2334/DELNP/2015 A
(43) Publication Date : 28/08/2015

(54) Title of the invention : FUEL INJECTION WITH SWIRL SPRAY PATTERNS IN OPPOSED- PISTON ENGINES

(51) International classification :F02M61/18,F02B23/06,F02B25/08
(31) Priority Document No :61/705561
(32) Priority Date :25/09/2012
(33) Name of priority country :U.S.A.
(86) International Application No :PCT/US2013/060429
Filing Date :18/09/2013
(87) International Publication No :WO 2014/052126
(61) Patent of Addition to Application Number :NA
Filing Date :NA
(62) Divisional to Application Number :NA
Filing Date :NA

(71)**Name of Applicant :**
1)ACHATES POWER, INC.
Address of Applicant :4060 Sorrento Valley Boulevard, San Diego, CA 92121 U.S.A.
(72)**Name of Inventor :**
1)ABANI, Neerav;
2)KLYZA, Clark,A.;
3)REDON, Fabien,

(57) Abstract :
In a fuel injection spray pattern for an opposed piston engine, the individual spray plumes have both radial and tangential components with respect to an injection axis (102, 114 ,121), which adds a swirl component to a spray pattern of fuel directly injected into the combustion chamber of the opposed piston engine.

No. of Pages : 26 No. of Claims : 22

(12) PATENT APPLICATION PUBLICATION
(21) Application No.2335/DELNP/2015 A
(19) INDIA
(22) Date of filing of Application :23/03/2015
(43) Publication Date : 28/08/2015

(54) Title of the invention : NOVEL MVA VIRUS AND USES THEREOF

(51) International classification	:C12N7/08,C12N15/86	(71)**Name of Applicant :**
(31) Priority Document No	:NA	**1)PROBIOGEN AG**
(32) Priority Date	:NA	Address of Applicant :Goethestr. 54 13086 Berlin Germany
(33) Name of priority country	:NA	(72)**Name of Inventor :**
(86) International Application No	:PCT/EP2012/069256	**1)INGO JORDAN**
Filing Date	:28/09/2012	**2)VOLKER SANDIG**
(87) International Publication No	:WO 2014/048500	
(61) Patent of Addition to Application Number	:NA	
Filing Date	:NA	
(62) Divisional to Application Number	:NA	
Filing Date	:NA	

(57) Abstract :
The present invention relates to a novel Modified Vaccinia Ankara (MVA) virus. The present invention also relates to a method for culturing said MVA virus and to a method for producing said MVA virus. Further the present invention relates to a pharmaceutical composition comprising said MVA virus and one or more pharmaceutical acceptable excipient(s) diluent(s) and/or carrier(s). Furthermore the present invention relates to a vaccine comprising said MVA virus. In addition the present invention relates to said MVA virus for use in medicine.

No. of Pages : 94 No. of Claims : 40

(12) PATENT APPLICATION PUBLICATION
(21) Application No.1509/DEL/2012 A
(19) INDIA
(22) Date of filing of Application :16/05/2012
(43) Publication Date : 28/08/2015

(54) Title of the invention : METHOD OF HEATING FOOD

(51) International classification :H05B6/00
(31) Priority Document No :NA
(32) Priority Date :NA
(33) Name of priority country :NA
(86) International Application No :NA
Filing Date :NA
(87) International Publication No : NA
(61) Patent of Addition to Application Number :NA
Filing Date :NA
(62) Divisional to Application Number :NA
Filing Date :NA

(71)**Name of Applicant :**
1)Ching-Chuan LIN
Address of Applicant :No. 271-26 Sec. 5 Zhongshan Rd. Zhongpu Township Chiayi County 606 Taiwan R.O.C. Taiwan
(72)**Name of Inventor :**
1)Ching-Chuan LIN

(57) Abstract :
A method of heating food is provided which employs a cooker provided with a control program and a reader to identify a food package attached with a coded object which embodies the parameters associated with the food package the parameters including temperature and time whereby the contents of the parameters of the coded object can be read by the reader and compared by the control program so that the control program can issue commands to conduct a heating procedure according to the contents of the parameters of the coded object. Thus the food package can be heated or cooked more easily conveniently safely and economically and the disadvantages resulted from incorrectly manual operations can be avoided.

No. of Pages : 16 No. of Claims : 10

(12) PATENT APPLICATION PUBLICATION
(21) Application No.2340/DELNP/2015 A
(19) INDIA
(22) Date of filing of Application :23/03/2015
(43) Publication Date : 28/08/2015

(54) Title of the invention : LOAD CROSS- OVER SLIP- JOINT MECHANISM AND METHOD OF USE

(51) International classification :E21B19/18,E21B17/046,E21B4/06
(31) Priority Document No :NA
(32) Priority Date :NA
(33) Name of priority country :NA
(86) International Application No :PCT/US2012/058242
Filing Date :01/10/2012
(87) International Publication No :WO 2014/055060
(61) Patent of Addition to Application Number :NA
Filing Date :NA
(62) Divisional to Application Number :NA
Filing Date :NA

(71)**Name of Applicant :**
1)HALLIBURTON ENERGY SERVICES ,INC.
Address of Applicant :10200 Bellaire Blvd., Houston ,Texas 77072 U.S.A.
(72)**Name of Inventor :**
1)STAUTZENBERGER, Arthur;
2)WATSON, Brock;

(57) Abstract :
A downhole tool assembly is presented for use in a wellbore, the tool having a mandrel assembly for substantially bearing the tensile and rotational loads placed on the tool assembly during run- in to the wellbore , a displacement assembly for substantially bearing displacement loads and for providing relative movement to the mandrel assembly, the displacement assembly for actuating a actuable tool attached to the mandrel assembly. The mandrel assembly has an upper mandrel positioned radially outward of the displacement assembly and a lower mandrel positioned radially inward of the displacement assembly. A load cross over mandrel transfers the tensile and rotational loads between the upper and lower mandrels. The load cross- over mandrel has a plurality of passages which allow corresponding rods of the displacement assembly to slide therethrough. The rods transfer the displacement loads from actuators above the rods to an actuable tool below the rods.

No. of Pages : 50 No. of Claims : 20

(12) PATENT APPLICATION PUBLICATION
(19) INDIA
(22) Date of filing of Application :23/03/2015
(21) Application No.2341/DELNP/2015 A
(43) Publication Date : 28/08/2015

(54) Title of the invention : INDUCTIVE POWER TRANSFER SYSTEM

(51) International classification :H02J17/00,H03F3/217
(31) Priority Document No :1215152.8
(32) Priority Date :24/08/2012
(33) Name of priority country :U.K.
(86) International Application No :PCT/GB2013/051456
Filing Date :31/05/2013
(87) International Publication No :WO 2014/029961
(61) Patent of Addition to Application Number :NA
Filing Date :NA
(62) Divisional to Application Number :NA
Filing Date :NA

(71)**Name of Applicant :**
1)DRAYSON WIRELESS LIMITED
Address of Applicant :Unit 29 Chancerygate Business Centre Langford Lane Oxfordshire OX5 1FQ U.K.
(72)**Name of Inventor :**
1)MITCHESON, PAUL
2)LUCYSZYN, STEPAN
3)PINUELA RANGEL, MAUEL
4)YTES, DAVID

(57) Abstract :
An inductive power transfer system comprises a transmitter coil TX and a receiver coil RX spaced from the transmitter coil. A transmitter circuit comprises the transmitter coil and is in the form of a Class E amplifier with a first inductor Uchoke and a transistor in series between the terminals of a power supply, a first transmitter capacitor Cpar in parallel with the transistor between the first inductor and a power supply terminal , a primary tank circuit in parallel with the first transmitter capacitor , the primary tank circuit comprising the transmitter coil and a second transmitter capacitor Cres arranged in parallel with the transmitter coil , and a third transmitter capacitor Cser in series with the first inductor between the first transmitter capacitor and the primary tank circuit. The transistor is arranged to switch at a first frequency @d and the capacitance of the second transmitter capacitor is selected such that the resonant frequency @OTX of the primary tank circuit is greater than the first frequency. The receiver circuit comprises a Class E rectifier having a first receiver capacitor CL arranged in parallel with a load RL and a secondary tank circuit in parallel with the first receiver capacitor. The secondary tank circuit comprises the receiver coil and a second receiver capacitor Cres arranged in parallel or series with the receiver coil. A first diode Dr2 is provided between the secondary tank circuit and the first receiver capacitor. The capacitance of the second receiver capacitor is selected such that the resonant frequency of the secondary tank circuit differs from the first frequency so that the secondary tank circuit operates in semi resonance and maintains some reactive impedance. The transmitter circuit is configured to vary the first frequency in order to achieve a desired impedance of the primary tank circuit.

No. of Pages : 39 No. of Claims : 22

(12) PATENT APPLICATION PUBLICATION
(19) INDIA
(22) Date of filing of Application :15/12/2014
(21) Application No.10689/DELNP/2014 A
(43) Publication Date : 28/08/2015

(54) Title of the invention : EXHAUST PURIFICATION SYSTEM OF INTERNAL COMBUSTION ENGINE

(51) International classification :F01N3/022,F01N3/023,F01N3/20
(31) Priority Document No :2012195420
(32) Priority Date :05/09/2012
(33) Name of priority country :Japan
(86) International Application No :PCT/JP2013/074606
Filing Date :05/09/2013
(87) International Publication No :WO 2014/038724
(61) Patent of Addition to Application Number :NA
Filing Date :NA
(62) Divisional to Application Number :NA
Filing Date :NA

(71)**Name of Applicant :**
1)TOYOTA JIDOSHA KABUSHIKI KAISHA
Address of Applicant :1 Toyotacho Toyota shi Aichi 4718571 Japan
(72)**Name of Inventor :**
1)DAIDO Shigeki
2)FUKURODA Takashi
3)OYAMA Naohisa
4)SENDA Kouji
5)OKAWARA Seiji

(57) Abstract :
A particulate filter (24) for trapping particulate filter which is contained in exhaust gas is arranged in an engine exhaust passage. The particulate filter is provided with exhaust gas inflow passages and exhaust gas outflow passages which are alternately arranged via porous partition walls. Movement promoting control is performed to promote movement of the ash which deposits on the inner circumferences of the exhaust gas inflow passages to the rear parts of the exhaust gas inflow passages. The pressure loss of the particulate filter is detected. When the detected pressure loss is larger than a predetermined upper limit value PM removal control is performed to remove the particulate matter from the particulate filter.

No. of Pages : 82 No. of Claims : 10

(12) PATENT APPLICATION PUBLICATION
(21) Application No.2337/DELNP/2015 A
(19) INDIA
(22) Date of filing of Application :23/03/2015
(43) Publication Date : 28/08/2015

(54) Title of the invention : ANTI -DANDRUFF SUGARS

(51) International classification :A61Q5/00,A61K8/60
(31) Priority Document No :12 58905
(32) Priority Date :21/09/2012
(33) Name of priority country :France
(86) International Application No :PCT/EP2013/069527
Filing Date :19/09/2013
(87) International Publication No :WO 2014/044779
(61) Patent of Addition to Application Number :NA
Filing Date :NA
(62) Divisional to Application Number :NA
Filing Date :NA

(71)**Name of Applicant :**
1)L'OREAL
Address of Applicant :14 ,rue Royale, F- 75008 Paris France
(72)**Name of Inventor :**
1)DALKO, Maria;
2)HITCE JULIEN
3)RAMOS-STANBURY LAURE

(57) Abstract :
The invention relates to the cosmetic use of at least one compounds according to the following formula (I) , as an anti dandruff agent or for preventing and/or treating scalp dandruff: where sugar denotes a monosaccharide residue chosen from rhamnose , xylose , fucose, mannose , lyxose , and arabinose; where R , substituting the anomeric oxygen in the sugar (represented by O in formula (I)), denotes a radical comprising 6 to 38 carbon atoms chosen from: - a linear or branched ,saturated alkyl radical; - a linear or branched ,alkenyl radical; said linear or branched saturated alkyl radical being optionally substituted by at least one OH and/or NH2 function; -if sugar denotes a mannose residue , R denotes a linear C6- C38 alkyl radical , substituted by at least one OH function or an NH2 function; and the salts and solvates and/or optical isomers thereof , alone or in a mixture, particularly racemic forms. The invention also relates to compounds according to formula (I), and cosmetic compositions containing same.

No. of Pages : 32 No. of Claims : 13

(12) PATENT APPLICATION PUBLICATION
(21) Application No.2338/DELNP/2015 A
(19) INDIA
(22) Date of filing of Application :23/03/2015
(43) Publication Date : 28/08/2015

(54) Title of the invention : OVERMOLDED MEDICAL CONNECTOR TUBING AND METHOD

(51) International classification :A61M39/12
(31) Priority Document No :13/632598
(32) Priority Date :01/10/2012
(33) Name of priority country :U.S.A.
(86) International Application No :PCT/US2013/061275
Filing Date :24/09/2013
(87) International Publication No :WO 2014/055283
(61) Patent of Addition to Application Number :NA
Filing Date :NA
(62) Divisional to Application Number :NA
Filing Date :NA

(71)**Name of Applicant :**
1)MEDRAD, INC.
Address of Applicant :1 Medrad Drive Indianola Pennsylvania 15051 U.S.A.
(72)**Name of Inventor :**
1)SPOHN, Michael, A.;
2)PRICE, Cory, J.;
3)MEIER, Andrew, W.;

(57) Abstract :
A high pressure medical connector tubing assembly includes a high pressure medical connector tubing assembly , including a tube element having opposed tube ends and a passageway , an end element overmolded to at least one of the opposed tube ends, the end element having an annular end portion having a preselected length, and a connector element having a connector hub defining a receiving cavity. The preselected length of the annular end portion may be used to pre- control the axial location of stress concentration in the connector hub. A method of forming the high pressure medical connector tubing assembly includes providing a tube element comprising opposed tube ends and a passageway therethrough , overmolding an end element onto at least one of the opposed tube ends , providing a connector element comprising a connector hub defining a receiving cavity, and securing the tube end with the overmolded end element in the receiving cavity.

No. of Pages : 24 No. of Claims : 20

(12) PATENT APPLICATION PUBLICATION
(21) Application No.2484/DELNP/2012 A
(19) INDIA
(22) Date of filing of Application :22/03/2012
(43) Publication Date : 28/08/2015

(54) Title of the invention : 'METHOD FOR IMPROVING AQUEOUS SOLUBILITY OF POORLY-SOLUBLE SUBSTANCES'

(51) International classification :A61K 47/02
(31) Priority Document No :PCT/JP2009/226130
(32) Priority Date :30/09/2009
(33) Name of priority country :Japan
(86) International Application No :PCT/JP2010/005545
Filing Date :10/09/2010
(87) International Publication No :WO 2011/039952
(61) Patent of Addition to Application Number :NA
Filing Date :NA
(62) Divisional to Application Number :NA
Filing Date :NA

(71)**Name of Applicant :**
1)KABUSHIKI KAISHA SANGI
Address of Applicant :11-6, TSUKIJI 3-CHOME, CHUO-KU, TOKYO 104-8440 JAPAN Japan
(72)**Name of Inventor :**
1)SAKUMA, SHUJI
2)KIKUKAWA, KEIICHIRO
3)MIYASAKA RYOSUKE

(57) Abstract :
Provided is a method for increasing the solubility of a poorly-soluble substance used in pharmaceutical products, veterinary pharmaceutical products, quasi-drugs, cosmetic products, food products, agricultural chemicals, and the like, without using large amounts of additives. This is a method for improving aqueous solubility, which comprises coating the surface of the particle of a poorly-soluble substance used in pharmaceutical products, veterinary pharmaceutical products, quasi-drugs, cosmetic products, food products, agricultural chemicals, and the like, with microparticles of a calcium compound such as calcium phosphate or calcium carbonate.

No. of Pages : 106 No. of Claims : 15

(12) PATENT APPLICATION PUBLICATION
(21) Application No.10699/DELNP/2014 A
(19) INDIA
(22) Date of filing of Application :15/12/2014
(43) Publication Date : 28/08/2015

(54) Title of the invention : METHOD AND APPARATUS FOR ENHANCED UPLINK MULTIPLEXING

(51) International classification	:H04J 3/02, H04B 7/00	(71)**Name of Applicant :**
(31) Priority Document No	:60/588,960	**1)INTEL CORPORATION**
(32) Priority Date	:19/07/2004	Address of Applicant :2200 Mission College Boulevard, Santa Clara, California 95054 USA U.S.A.
(33) Name of priority country	:U.S.A.	(72)**Name of Inventor :**
(86) International Application No	:PCT/US2005/023891	**1)TERRY, Stephen E.**
Filing Date	:05/07/2005	
(87) International Publication No	: NA	
(61) Patent of Addition to Application Number	:NA	
Filing Date	:NA	
(62) Divisional to Application Number	:160/DELNP/2007	
Filed on	:05/01/2007	

(57) Abstract :
A method and apparatus for enhanced uplink multiplexing are disclosed. A set of combinations of MAC-d flows (and/or logical channels) that are allowed to be multiplexed within a MAC-e PDU is defined for a WTRU. The WTRU MAC-e entity selects a combination among a set of allowed combinations for multiplexing MAC-d flows for each MAC-e PDU. Certain MAC-d flow combinations may be defined that can not be blocked from transmission even when the WTRU is in a transmit power restricted state. The amount of data from each logical channel or corresponding MAC-d flow that can be multiplexed within a MAC-e PDU may be defined to ensure guaranteed data rates. When the WTRU is in a restricted power condition, an indication of the restricted power condition may be passed to the Node-B with the EU transmission.

No. of Pages : 18 No. of Claims : 31

(12) PATENT APPLICATION PUBLICATION
(21) Application No.2348/DELNP/2015 A
(19) INDIA
(22) Date of filing of Application :23/03/2015
(43) Publication Date : 28/08/2015

(54) Title of the invention : CONTAINER WITH MULTIPLE LAYERS HAVING INCREASED STACKING STRENGTH

(51) International classification :B65D77/06
(31) Priority Document No :13/653816
(32) Priority Date :17/10/2012
(33) Name of priority country :U.S.A.
(86) International Application No :PCT/US2013/065274
Filing Date :16/10/2013
(87) International Publication No :WO 2014/062825
(61) Patent of Addition to Application Number :NA
Filing Date :NA
(62) Divisional to Application Number :NA
Filing Date :NA

(71)**Name of Applicant :**
1)THE PROCTER & GAMBLE COMPANY
Address of Applicant :One Procter & Gamble Plaza, Cincinnati, Ohio 45202 U.S.A.
(72)**Name of Inventor :**
1)ALVARADO, Mauro, Jr.;

(57) Abstract :
A container comprising: a cardboard enclosure having six sides , wherein the six sides comprise a top side (801), a bottom side, a back side, a front side, a left sid,e and a right side , wherein the top side and the bottom side are opposing, wherein the left side and the right side are opposing and wherein the left side and the right side each comprise at least a first layer of cardboard and a second layer of cardboard for increased top load strength; and a fillable bladder (903) positioned within the cardboard enclosure , an interior of the fillable bladder being accessible through a pour spout opening (10) in the top side of the enclosure.

No. of Pages : 23 No. of Claims : 10

(12) PATENT APPLICATION PUBLICATION
(21) Application No.2349/DELNP/2015 A
(19) INDIA
(22) Date of filing of Application :23/03/2015
(43) Publication Date : 28/08/2015

(54) Title of the invention : DRUG PROTEIN CONJUGATES

(51) International classification :A61K47/48
(31) Priority Document No :61/717710
(32) Priority Date :24/10/2012
(33) Name of priority country :U.S.A.
(86) International Application No :PCT/GB2013/052661
Filing Date :11/10/2013
(87) International Publication No :WO 2014/064423
(61) Patent of Addition to Application Number :NA
Filing Date :NA
(62) Divisional to Application Number :NA
Filing Date :NA

(71)**Name of Applicant :**
1)POLYTHERICS LIMITED
Address of Applicant :Babraham Research Campus Babraham Cambridge CB22 3 AT U.K.
(72)**Name of Inventor :**
1)POLYTHERICS LIMITED

(57) Abstract :
Specific conjugates containing auristatins and a binding protein or peptide and processes for making them are described. The conjugates use specific linker technology which gives advantages over known antibody drug conjugates. Also described are specific conjugates of drugs and a binding protein or peptide in which more than one copy of the drug is present.

No. of Pages : 90 No. of Claims : 22

(12) PATENT APPLICATION PUBLICATION
(21) Application No.2492/DELNP/2012 A
(19) INDIA
(22) Date of filing of Application :22/03/2012
(43) Publication Date : 28/08/2015

(54) Title of the invention : SYNERGISTIC FUNGICIDAL COMBINATIONS CONTAINING A DITHINOTETRACARBOXAMIDE FUNGICIDE

(51) International classification :A01N 43/90
(31) Priority Document No :09170209.2
(32) Priority Date :14/09/2009
(33) Name of priority country :EUROPEAN UNION
(86) International Application No :PCT/EP2010/005395
Filing Date :02/09/2010
(87) International Publication No :WO 2011/029551
(61) Patent of Addition to Application Number :NA
Filing Date :NA
(62) Divisional to Application Number :NA
Filing Date :NA

(71)**Name of Applicant :**
1)BAYER CROPSCIENCE AG
Address of Applicant :A1FRED-NOBEL-STRASSE 50, 40789 MONHEIM, GERMANY Germany
(72)**Name of Inventor :**
1)THOMAS SEITZ
2)ULRIKE WACHENDORFF-NEUMANN
3)PETER DAHMEN

(57) Abstract :
The present invention relates to active compound combinations, in particular within a fungicide composition, which comprises (A) a dithiino-tetracarboximide of formula (I) and a further fungicidally active compound (B). Moreover, the invention relates to a method for curatively or preventively controlling the phytopathogenic fungi of plants or crops, to the use of a combination according to the invention for the treatment of seed, to a method for protecting a seed and not at least to the treated seed.

No. of Pages : 56 No. of Claims : 10

(12) PATENT APPLICATION PUBLICATION
(21) Application No.2493/DELNP/2012 A
(19) INDIA
(22) Date of filing of Application :22/03/2012
(43) Publication Date : 28/08/2015

(54) Title of the invention : COMPOUNDS AS TYROSINE KINASE MODULATORS

(51) International classification :C07D 401/04
(31) Priority Document No :61/239,603
(32) Priority Date :03/09/2009
(33) Name of priority country :U.S.A.
(86) International Application No :PCT/US2010/047800
Filing Date :03/09/2010
(87) International Publication No :WO 2011/028995
(61) Patent of Addition to Application Number :NA
Filing Date :NA
(62) Divisional to Application Number :NA
Filing Date :NA

(71)**Name of Applicant :**
1)ALLERGAN, INC.
Address of Applicant :2525 DUPONT DRIVE, IRVINE, CA 92612, UNITED STATES OF AMERICA U.S.A.
(72)**Name of Inventor :**
1)XIALING GUO
2)ZHEN ZHU

(57) Abstract :
The present invention is directed to novel compounds of Formula I. The compounds of the present invention are potent tyrosine kinase modulators, and are suitable for the treatment and prevention of diseases and conditions related to abnormal activities of tyrosine kinase receptors.

No. of Pages : 196 No. of Claims : 15

(12) PATENT APPLICATION PUBLICATION
(21) Application No.2494/DELNP/2012 A
(19) INDIA
(22) Date of filing of Application :22/03/2012
(43) Publication Date : 28/08/2015

(54) Title of the invention : PROCESSES AND USES OF DISSOCIATING MOLECULES

(51) International classification :C02F 1/32
(31) Priority Document No :61/236,592
(32) Priority Date :25/08/2009
(33) Name of priority country :U.S.A.
(86) International Application No :PCT/US2010/046336
Filing Date :23/08/2010
(87) International Publication No :WO 2011/028478
(61) Patent of Addition to Application Number :NA
Filing Date :NA
(62) Divisional to Application Number :NA
Filing Date :NA

(71)**Name of Applicant :**
1)FAHS STAGEMYER LLC
Address of Applicant :WOODSTOCK MEADOWS, WOODSTOCK CT 06281, UNITED STATES OF AMERICA U.S.A.
(72)**Name of Inventor :**
1)RICHARD W. FAHS
2)MATTHEW D.W. FAHS

(57) Abstract :
A process has been developed to selectively dissociate target molecules into component products compositionally distinct from the target molecule, wherein the bonds of the target molecule do not reform because the components are no longer reactive with each other. Dissociation is affected by treating the target molecule with light at a frequency tad intensity, alone or in combination with a catalyst in an amount effective to selectively break bonds within the target molecule. Dissociation does not re¬sult in re-association into the target molecule by the reverse process, and does not produce componenl products which have a change in oxidation number or state incorporated oxygen or other additives because the process does not proceed via a typical re¬duction-oxidation mechanism. Target molecules include ammonia for waste reclamation and treatment, PCB remediation, and tar¬geted drug delivery.

No. of Pages : 43 No. of Claims : 26

(12) PATENT APPLICATION PUBLICATION
(19) INDIA
(22) Date of filing of Application :23/03/2015
(21) Application No.2345/DELNP/2015 A
(43) Publication Date : 28/08/2015

(54) Title of the invention : REPLENISHING A RETAIL FACILITY

(51) International classification :G06F17/00
(31) Priority Document No :13/647147
(32) Priority Date :08/10/2012
(33) Name of priority country :U.S.A.
(86) International Application No :PCT/US2013/062786
Filing Date :01/10/2013
(87) International Publication No :WO 2014/058653
(61) Patent of Addition to Application Number :NA
Filing Date :NA
(62) Divisional to Application Number :NA
Filing Date :NA

(71)**Name of Applicant :**
1)AMAZON TECHNOLOGIES, INC.
Address of Applicant :1200 12th Avenue South, Seattle, WA 98144 2734 U.S.A.
(72)**Name of Inventor :**
1)WURMAN, Peter, R.;
2)MOUNTZ, Michael, C ;

(57) Abstract :
A system includes storage shelves and display shelves at a retail facility. The system also includes a management module operable to determine to replenish a display shelf with an inventory item stored by a storage shelf. The management module is also operable to coordinate movement of mobile drive units to replenish the display shelf with the inventory} item at an inventory restocking station. The system also includes a first mobile drive unit and a second mobile drive unit. The first mobile drive unit is operable to receive first instructions from the management module to transport the display shelf to the inventory restocking station. The second mobile drive unit is operable to receive second instructions from the management module to transport the storage shelf to the inventory restocking station. At the inventory restocking station, the display shelf receives the inventory item.

No. of Pages : 82 No. of Claims : 10

(12) PATENT APPLICATION PUBLICATION
(21) Application No.2346/DELNP/2015 A
(19) INDIA
(22) Date of filing of Application :23/03/2015
(43) Publication Date : 28/08/2015

(54) Title of the invention : ABSORBENT ARTICLE

(51) International classification :A61F13/15,A61F13/472
(31) Priority Document No :2012218745
(32) Priority Date :28/09/2012
(33) Name of priority country :Japan
(86) International Application No :PCT/JP2013/074563
Filing Date :11/09/2013
(87) International Publication No :WO 2014/050568
(61) Patent of Addition to Application Number :NA
Filing Date :NA
(62) Divisional to Application Number :NA
Filing Date :NA

(71)**Name of Applicant :**
1)UNICHARM CORPORATION
Address of Applicant :182 Shimobun Kinsei cho Shikokuchuo shi Ehime 7990111 Japan
(72)**Name of Inventor :**
1)TAMURA, TATSUYA
2)NODA, YUKI
3)HASHINO, AKIRA

(57) Abstract :
The purpose of the present invention is to provide an absorbent article wherein an excretory orifice contact region of a top sheet does not easily become sticky and has a dry feel after absorbing menstrual blood and a blood lubricating agent cannot easily transfer on to flaps when the absorbent article is individually packaged. An individually packaged absorbent article (1) having a pair of flaps (4) for securing the absorbent article to the clothing of a wearer the absorbent article (1) being characterized by being folded multiple times along multiple folding axes (F) such that the pair of flaps (4) is folded over a liquid permeable top sheet (2) and the top sheet (2) faces inward wherein the top sheet (2) has a blood lubricating agent containing region (7) which contains a predetermined blood lubricating agent in an area which overlaps with the pair of flaps (4) in the thickness direction of the absorbent article (1). Moreover the absorbent article (1) is provided with a spacer for forming a space (13) between the pair of flaps (4) and the blood lubricating agent containing region (7) of the top sheet (2).

No. of Pages : 112 No. of Claims : 15

(12) PATENT APPLICATION PUBLICATION
(21) Application No.2347/DELNP/2015 A
(19) INDIA
(22) Date of filing of Application :23/03/2015
(43) Publication Date : 28/08/2015

(54) Title of the invention : COMMUNICATION OF MESSAGE SIGNALLED INTERRUPTS

(51) International classification :G06F13/24
(31) Priority Document No :13/661456
(32) Priority Date :26/10/2012
(33) Name of priority country :U.S.A.
(86) International Application No :PCT/GB2013/052265
Filing Date :29/08/2013
(87) International Publication No :WO 2014/064417
(61) Patent of Addition to Application Number :NA
Filing Date :NA
(62) Divisional to Application Number :NA
Filing Date :NA

(71)**Name of Applicant :**
1)ARM LIMITED
Address of Applicant :110 Fulbourn Road, Cherry Hinton, Cambridge CB1 9NJ U.K.
(72)**Name of Inventor :**
1)GRISENTHWAITE, Richard Roy;
2)JEBSON, Anthony;
3)ROSE, Andrew Christopher;
4)EVANS, Matthew Lucien Evans;

(57) Abstract :
A global interrupt number space (38) is provided for use in message signalled interrupts. Interrupt destinations (10 , 12 , 14 , 16) are provided with pending interrupt caches (24) with either backing storage provided by global pending status memory (34) shared by all the caches or separate individual pending status memories (56). The interrupt number space may be divided into regions with programmable mapping data being used to indicate which interrupt destinations are responsible for which regions. When interrupts are migrated from one interrupt destination to another, then such programmable mapping data is updated. Pending interrupts may be flushed back to the global pending status memory 34 during the reassignment process such that this pending interrupt data may be picked up by the newly responsible interrupt destination.

No. of Pages : 26 No. of Claims : 25

(12) PATENT APPLICATION PUBLICATION
(21) Application No.2495/DELNP/2012 A
(19) INDIA
(22) Date of filing of Application :22/03/2012
(43) Publication Date : 28/08/2015

(54) Title of the invention : CONCENTRATED SOLAR POWER SYSTEM

(51) International classification :F03G 7/00
(31) Priority Document No :61/243,763
(32) Priority Date :18/09/2009
(33) Name of priority country :U.S.A.
(86) International Application No :PCT/US2010/049474
Filing Date :20/09/2010
(87) International Publication No :WO 2011/035232
(61) Patent of Addition to Application Number :NA
Filing Date :NA
(62) Divisional to Application Number :NA
Filing Date :NA

(71)**Name of Applicant :**
1)MASSACHUSETTS INSTITUTE OF TECHNOLOGY
Address of Applicant :77 MASSACHUSETTS AVENUE, CAMBRIDGE, MA 02139-4307, UNITED STATES OF AMERICA U.S.A.
(72)**Name of Inventor :**
1)ALEXANDER H. SLOCUM
2)JACOPO BUONGIORNO
3)CHARLES WINFIELD FORSBERG
4)DANIEL S. CODD
5)ADAM T. PAXSON

(57) Abstract :
Systems and methods for concentrating and storing solar energy are provided. A solar energy receiver for use with the systems and methods may include a container for holding a solar absorption material, such as a phase change material, and a cooled cover disposed above the container for condensing and collecting vaporized phase change material collected along an un¬derside of the cover.

No. of Pages : 51 No. of Claims : 60

(12) PATENT APPLICATION PUBLICATION
(21) Application No.186/DEL/2015 A
(19) INDIA
(22) Date of filing of Application :21/01/2015
(43) Publication Date : 28/08/2015

(54) Title of the invention : YARN-END CATCHING DEVICE AND YARN WINDING DEVICE

(51) International classification :B65H67/08
(31) Priority Document No :2014-032627
(32) Priority Date :24/02/2014
(33) Name of priority country :Japan
(86) International Application No :NA
Filing Date :NA
(87) International Publication No : NA
(61) Patent of Addition to Application Number :NA
Filing Date :NA
(62) Divisional to Application Number :NA
Filing Date :NA

(71)**Name of Applicant :**
1)Murata Machinery, Ltd.
Address of Applicant :3 Minami Ochiai-cho, Kisshoin, Minami-ku, Kyoto-shi, Kyoto 601-8326, Japan Japan
(72)**Name of Inventor :**
1)IMAMURA Hisakatsu
2)MICHIHARA Kzutoshi

(57) Abstract :
A yarn catching assisting section 54 arranged at a tip-end portion 52b of an angle guide 52 of a suction mouth and adapted to retain a yarn-end portion includes a 5 metal coating 55 having a base layer 55a and a plurality of protrusions 55b that protrude from the base layer 55a. The metal coating 55 is formed by solidifying a metal material having a flow property, that has been sprayed on a surface 10 of the angle guide 52.

No. of Pages : 52 No. of Claims : 12

(12) PATENT APPLICATION PUBLICATION
(19) INDIA
(22) Date of filing of Application :23/03/2015
(21) Application No.2350/DELNP/2015 A
(43) Publication Date : 28/08/2015

(54) Title of the invention : METHODS FOR PRODUCING FLUID INVASION RESISTANT CEMENT SLURRIES

(51) International classification :E21B33/13,C09K8/42
(31) Priority Document No :61/720662
(32) Priority Date :31/10/2012
(33) Name of priority country :U.S.A.
(86) International Application No :PCT/US2013/065941
Filing Date :21/10/2013
(87) International Publication No :WO 2014/070503
(61) Patent of Addition to Application Number :NA
Filing Date :NA
(62) Divisional to Application Number :NA
Filing Date :NA

(71)**Name of Applicant :**
1)HALLIBURTON ENERGY SERVICES INC.
Address of Applicant :10200 Bellaire Boulevard, Houston, Texas 77072 U.S.A.
(72)**Name of Inventor :**
1)MARCHESINI, Flavio H.;
2)DE OLIVEIRA, Rafael Menezes;
3)KHAMMAR, Merouane;
4)SANTRA, Ashok K.;
5)PAIVA, Maria das Dores M.;

(57) Abstract :
Embodiments including methods comprising providing a wellbore in a subterranean formation having a wellbore length; providing a proposed cement slurry formulation; calculating a normalized pressure at a point along the wellbore length based on properties of the proposed cement slurry formulation and properties of the wellbore in the subterranean formation; manipulating the proposed cement slurry formulation based on the normalized pressure so as to produce a fluid invasion resistant cement slurry; introducing the fluid invasion resistant cement slurry into the wellbore; and cementing the fluid invasion resistant cement slurry in the wellbore.

No. of Pages : 27 No. of Claims : 20

(12) PATENT APPLICATION PUBLICATION
(21) Application No.2351/DELNP/2015 A
(19) INDIA
(22) Date of filing of Application :23/03/2015
(43) Publication Date : 28/08/2015

(54) Title of the invention : APPARATUS AND METHOD FOR PROCESSING INPUT ON TOUCH SCREEN

(51) International classification :G06F3/041,G06F3/03
(31) Priority Document No :1020120095081
(32) Priority Date :29/08/2012
(33) Name of priority country :Republic of Korea
(86) International Application No :PCT/KR2013/007729
Filing Date :28/08/2013
(87) International Publication No :WO 2014/035141
(61) Patent of Addition to Application Number :NA
Filing Date :NA
(62) Divisional to Application Number :NA
Filing Date :NA

(71)**Name of Applicant :**
1)SAMSUNG ELECTRONICS CO., LTD.
Address of Applicant :129, Samsung- ro, Yeongtong- gu, Suwon -si, Gyeonggi- do 443- 742 Republic of Korea
(72)**Name of Inventor :**
1)LEE, Joo-Hoon;
2)OH, Sang-Hyeok;

(57) Abstract :
An apparatus and method for processing a touch screen input are provided. The method includes determining if an input from an electronic pen on a touch screen is a contact input or a hovering input, calculating a coordinate of the electronic pen on an input sensing panel of the touch screen by applying a first preset movement determination reference filter in the contact input and applying a second preset movement determination reference filter in the hovering input , the second preset movement determination reference filter having a wider range than that of the first movement determination reference filter in the hovering input, and outputting a coordinate signal according to the calculated coordinate.

No. of Pages : 19 No. of Claims : 10

(12) PATENT APPLICATION PUBLICATION
(19) INDIA
(22) Date of filing of Application :22/03/2012
(21) Application No.2498/DELNP/2012 A
(43) Publication Date : 28/08/2015

(54) Title of the invention : METHOD AND APPARATUS FOR THE CONVEYANCE, COOLING AND ENERGY RECUPERATION OF HOT MATERIAL

(51) International classification :F23J 1/00
(31) Priority Document No :200910178566.2
(32) Priority Date :29/09/2009
(33) Name of priority country :China
(86) International Application No :PCT/EP2010/064336
Filing Date :28/09/2010
(87) International Publication No :WO 2011/039165
(61) Patent of Addition to Application Number :NA
Filing Date :NA
(62) Divisional to Application Number :NA
Filing Date :NA

(71)**Name of Applicant :**
1)CLYDE BERGEMANN DRYCON GMBH
Address of Applicant :SCHILWIESE 20, 46485 WESEL (DE) Germany
(72)**Name of Inventor :**
1)MORENO RUEDA, RAFAEL
2)HONGMIN, GE
3)HONGJUAN, MA
4)JOHNSON, LIU

(57) Abstract :
Method for the conveyance, cooling and energy recuperation of hot material (2) from a combustion boiler (3) of a combustion plant (4), comprising at least the following steps: a) issue of the hot material (2) from a material issue orifice (10) of a combustion boiler (3) into a capture region (7) of a housing (5), a conveyor belt (6) being arranged in the housing (5); b) conveyance of the hot material (2) through a cooling region (8) in the housing (5); c) cooling of the hot material (2) in the cooling region (8) by means of a cooling-air stream moving in the opposite direction to the material (2); d) removal of at least part of the heated cooling-air stream out of at least one region adjacent to the capture region (7) of the housing (5); e) delivery of the removed cooling-air stream to at least one region (12, 13), carrying combustion exhaust gases, of the combustion plant (4). Moreover, a corresponding apparatus for the conveyance, cooling and energy recuperation of hot material (2) from a combustion boiler (3) of a combustion plant (4) is proposed.

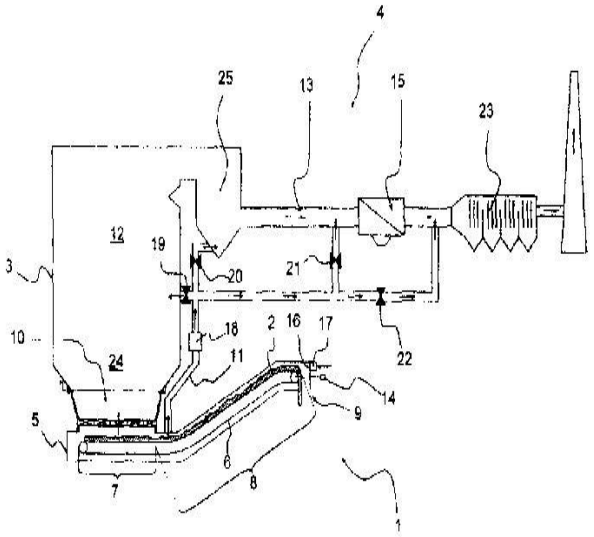

Fig. 1

No. of Pages : 20 No. of Claims : 9

(12) PATENT APPLICATION PUBLICATION
(21) Application No.2499/DELNP/2012 A
(19) INDIA
(22) Date of filing of Application :22/03/2012
(43) Publication Date : 28/08/2015

(54) Title of the invention : ROLE OF N-2 HYDROXY-ETHYL-PIPERAZINE-N'-2-ETHANE SULFONIC ACID (HEPES) IN PAIN CONTROL AND REVERSAL OF DEMYELINIZATION INJURY

(51) International classification :A61K 31/495
(31) Priority Document No :61/243,464
(32) Priority Date :17/09/2009
(33) Name of priority country :U.S.A.
(86) International Application No :PCT/US2010/049405
Filing Date :17/09/2010
(87) International Publication No :WO 2011/035212
(61) Patent of Addition to Application Number :NA
Filing Date :NA
(62) Divisional to Application Number :NA
Filing Date :NA

(71)**Name of Applicant :**
1)NORTH TEXAS MEDICAL ASSOCIATES
Address of Applicant :222 SW 2ND STREET, SUITE 201, GRAND PRAIRIE, TX 75051-1770, U.S.A U.S.A.
(72)**Name of Inventor :**
1)DANHOF, IVAN, E.

(57) Abstract :
Compositions and therapeutic uses of HEPES and derivatives in the treatment of pain associated with cancers and side-effects including post-chemotherapy cognitive impairment are disclosed herein. HEPES is also used to treat neurodegenerative and neurological diseases, demyelinization injuries, and side-effects and withdrawal symptoms associated with benzodiazepines, anti-depressants, and other neurological agents.

No. of Pages : 31 No. of Claims : 36

(12) PATENT APPLICATION PUBLICATION
(21) Application No.2071/DEL/2014 A
(19) INDIA
(22) Date of filing of Application :22/07/2014
(43) Publication Date : 28/08/2015

(54) Title of the invention : DIGITAL VIDEO RECORDER

(51) International classification	:G11B27/00
(31) Priority Document No	:201305670-0
(32) Priority Date	:23/07/2013
(33) Name of priority country	:Singapore
(86) International Application No	:NA
Filing Date	:NA
(87) International Publication No	: NA
(61) Patent of Addition to Application Number	:NA
Filing Date	:NA
(62) Divisional to Application Number	:NA
Filing Date	:NA

(71)**Name of Applicant :**
1)AKENORI PTE LTD
Address of Applicant :176 JOOCHIAT, #02-02, SINGAPORE, 427447 Singapore
(72)**Name of Inventor :**
1)DMITRY KUCHERYUK

(57) Abstract :
Provided is a video recorder autonomously mounted on a windscreen or a glass pane from within of the car. The sidewalls of the housing of the video recorder form an enclosed internal cavity in which a video camera is placed. One sidewall of the video recorder housing is substantially flat thus providing a fastening side for mounting the housing to the windscreen either directly or through a gasket or through a gasket with a firm plate for forming a detachable fixation of the video recorder to the windscreen. The housing fastening side has a window and the gasket and the plate (if present) each has an opening of the same form and arrangement as the window. An optical axis of video camera lens is directed through the internal enclosed cavity to the window such that an external radiation, for example, visible light passing into the cavity and falling to the video camera lens of the video recorder can be acquired by the video camera image sensor for obtaining an image. Such construction allows to avoid hitting of light from stray external light sources into the video camera lens and, thus, to avoid distortion of the received image by light patches from the external sources.

No. of Pages : 22 No. of Claims : 11

(12) PATENT APPLICATION PUBLICATION
(21) Application No.2505/DELNP/2012 A
(19) INDIA
(22) Date of filing of Application :22/03/2012
(43) Publication Date : 28/08/2015

(54) Title of the invention : ESTIMATING USER DEVICE LOCATION IN A WIRELESS NETWORK

(51) International classification :G01S 5/02
(31) Priority Document No :12/565,100
(32) Priority Date :23/09/2009
(33) Name of priority country :U.S.A.
(86) International Application No :PCT/GB2010/051588
Filing Date :22/09/2010
(87) International Publication No :WO 2011/036482
(61) Patent of Addition to Application Number :NA
Filing Date :NA
(62) Divisional to Application Number :NA
Filing Date :NA

(71)**Name of Applicant :**
1)ROCKSTAR BIDCO, LP
Address of Applicant :1285 AVENUE OF THE AMERICAS, NEW YORK, NEW YORK 10019-6064, UNITED STATES OF AMERICA U.S.A.
(72)**Name of Inventor :**
1)HALL, STEVEN
2)JEFFRIES, ANDREW
3)BEVAN, DAVID
4)BAINES, STEVEN

(57) Abstract :
A method of estimating user location involving collecting data from the access points in the network. The data can then be used to define a relationship, for example the loss of power experienced by a transmitted signal, between the access points. The relationship can be stored within a matrix, database or any other suitable storage method that can be referenced to determine the position of a user device within the network and correlated with corresponding measurements from a user device to determine the location of the user device within the network.

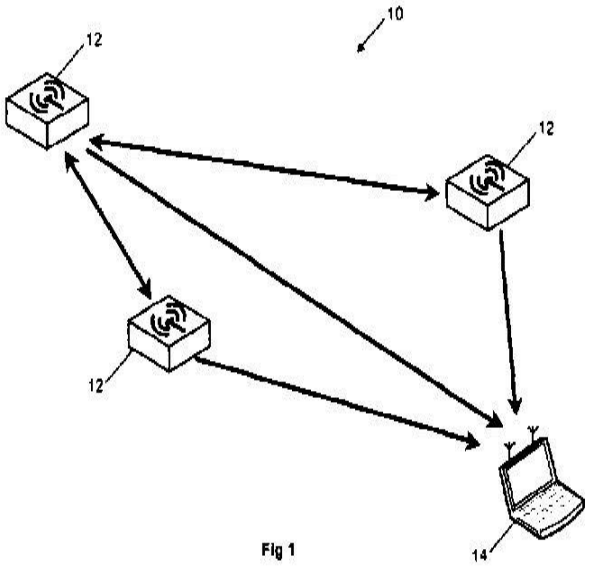

Fig 1

No. of Pages : 24 No. of Claims : 14

(12) PATENT APPLICATION PUBLICATION
(19) INDIA
(22) Date of filing of Application :22/03/2012
(21) Application No.2506/DELNP/2012 A
(43) Publication Date : 28/08/2015

(54) Title of the invention : A METHOD AND APPARATUS TO CONTROL SCHEDULING

(51) International classification :H04W 72/12
(31) Priority Document No :NA
(32) Priority Date :NA
(33) Name of priority country :NA
(86) International Application No :PCT/EP2009/062773
Filing Date :01/10/2009
(87) International Publication No :WO 2011/038768
(61) Patent of Addition to Application Number :NA
Filing Date :NA
(62) Divisional to Application Number :NA
Filing Date :NA

(71)**Name of Applicant :**
1)NOKIA SIEMENS NETWORKS OY
Address of Applicant :KARAPORTTI 3, FI-02610 ESPOO, FINLAND, Finland
(72)**Name of Inventor :**
1)ROSA, CLAUDIO
2)KOLDING, TROELS EMIL
3)SEBIRE, DENOIST PIERRE

(57) Abstract :
A method of scheduling resources in a communications link wherein a scheduling requests are transmitted from a first entity to a second entity comprising determining if any of the following conditions exist: the time elapsed since the last scheduling request exceeds a designated time; the up-link requirement exceeds a predetermined level; or semi-persistent scheduling exists; and if so, suppressing the transmission and/or triggering of scheduling requests.

FIG 3

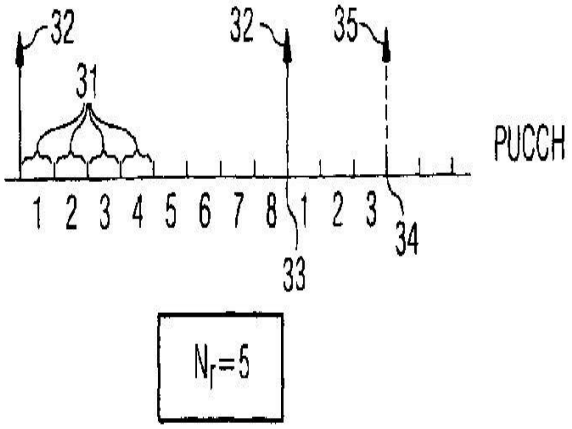

No. of Pages : 28 No. of Claims : 24

(12) PATENT APPLICATION PUBLICATION
(19) INDIA
(22) Date of filing of Application :22/03/2012

(21) Application No.2507/DELNP/2012 A
(43) Publication Date : 28/08/2015

(54) Title of the invention : HENB BLIND DETECTION FOR HIERARCHY CONFIGURATION

(51) International classification :H04W 56/00
(31) Priority Document No :NA
(32) Priority Date :NA
(33) Name of priority country :NA
(86) International Application No :PCT/CN2009/074735
Filing Date :30/10/2009
(87) International Publication No :WO 2011/050539
(61) Patent of Addition to Application Number :NA
Filing Date :NA
(62) Divisional to Application Number :NA
Filing Date :NA

(71)**Name of Applicant :**
1)NOKIA SIEMENS NETWORKS OY
Address of Applicant :KARAPORTTI 3, FI-02610 ESPOO, FINLAND, Finland
(72)**Name of Inventor :**
1)LIN, JIE ZHEN
2)HE, JING
3)YAO, CHUN HAI
4)ZHAO, DONG
5)WU, CHUNLI
6)SKOV, PETER

(57) Abstract :
It is provided an apparatus, comprising deciding means configured to decide whether or not a predefined condition is met; receiving means configured to receive a first signal at predefined places; inhibiting means configured to inhibit sending a second signal at a plurality of the predefined places, if the deciding means decides that the predefined condition is met; monitoring means configured to monitor, if the deciding means decides that the predefined condition is met, for at least two of the predefined places whether or not a first signal is received at the predefined places; defining means configured to define a first mute place based on the monitoring result of the monitoring means and a predefined rule, wherein the first mute place is one of the predefined places at which, according to the monitoring means, a first signal is received; wherein the inhibiting means is configured to inhibit sending the second signal at the first mute place.

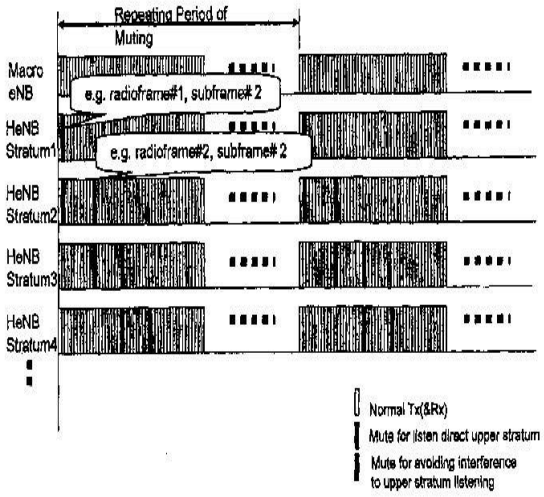

Fig. 3

No. of Pages : 43 No. of Claims : 26

(12) PATENT APPLICATION PUBLICATION
(19) INDIA
(22) Date of filing of Application :11/12/2014
(21) Application No.10566/DELNP/2014 A
(43) Publication Date : 28/08/2015

(54) Title of the invention : STRUCTURAL COMPOSITE BATTERY WITH FLUIDIC PORT FOR ELECTROLYTE

(51) International classification :H01M2/12,H01G9/02,H01M2/16
(31) Priority Document No :1210514.4
(32) Priority Date :14/06/2012
(33) Name of priority country :U.K.
(86) International Application No :PCT/GB2013/051494
Filing Date :06/06/2013
(87) International Publication No :WO 2013/186535
(61) Patent of Addition to Application Number :NA
Filing Date :NA
(62) Divisional to Application Number :NA
Filing Date :NA

(71)**Name of Applicant :**
1)BAE SYSTEMS PLC
Address of Applicant :6 Carlton Gardens London SW1Y 5AD U.K.
(72)**Name of Inventor :**
1)HUCKER Martyn John
2)REW Jason Karl
3)DUNLEAVY Michael

(57) Abstract :
According to the invention there is provided a fluidic port (8 9) for a refillable structural composite electrical energy storage device(l) and a method of producing same. The device may be a battery or supercapacitor with first and second electrodes (2 3) which are separated by a separator structure (6) wherein the device contains an electrolyte (4) which may further contain active electrochemical reagents. The fluidic port allows the addition removal of electrolyte fluids and venting of any outgassing by products.

No. of Pages : 16 No. of Claims : 14

(12) PATENT APPLICATION PUBLICATION
(21) Application No.10567/DELNP/2014 A
(19) INDIA
(22) Date of filing of Application :11/12/2014
(43) Publication Date : 28/08/2015

(54) Title of the invention : VACUUM INTERRUPTER WITH DOUBLE COAXIAL CONTACT ARRANGEMENT AT EACH SIDE

(51) International classification :H01H33/664
(31) Priority Document No :12004395.5
(32) Priority Date :11/06/2012
(33) Name of priority country :EPO
(86) International Application No :PCT/EP2013/001708
Filing Date :11/06/2013
(87) International Publication No :WO 2013/185906
(61) Patent of Addition to Application Number :NA
Filing Date :NA
(62) Divisional to Application Number :NA
Filing Date :NA

(71)**Name of Applicant :**
1)ABB TECHNOLOGY AG
Address of Applicant :Affolternstrae 44 CH 8050 Zurich Switzerland
(72)**Name of Inventor :**
1)GENTSCH Dietmar
2)LAMARA Tarek
3)SOKOLOV Alexey

(57) Abstract :
The invention relates to a vacuum interrupter with double co axial contact arrangement in which the inner contact has a TMF like or Pin shape arranged within concentrically cup shaped AMF coil with a single layer or multilayered contact parts at each side th.m. on the side of the a fixed contact arrangement as well as on the side of a movable contact arrangement according to the preamble of claim 1. In order to enhance this special construction furthermore in order to result high conductivity and low resistance the invention is that the outer cup shaped contact is made from a double or multiple layer arrangement wherein at least one layer is made from a hard steel or steel alloy and at least a second layer is made from material with high thermal conductivity.

No. of Pages : 18 No. of Claims : 14

(12) PATENT APPLICATION PUBLICATION
(21) Application No.2311/DELNP/2015 A
(19) INDIA
(22) Date of filing of Application :21/03/2015
(43) Publication Date : 28/08/2015

(54) Title of the invention : PRESS MOLDING METHOD AND BOTTOMED CONTAINER

(51) International classification :B21K21/16,B21D22/28,B21D22/30
(31) Priority Document No :2012233707
(32) Priority Date :23/10/2012
(33) Name of priority country :Japan
(86) International Application No :PCT/JP2013/078611
Filing Date :22/10/2013
(87) International Publication No :WO 2014/065290
(61) Patent of Addition to Application Number :NA
Filing Date :NA
(62) Divisional to Application Number :NA
Filing Date :NA

(71)**Name of Applicant :**
1)NIPPON STEEL & SUMITOMO METAL CORPORATION
Address of Applicant :6- 1, Marunouchi 2- chome, Chiyoda- ku, Tokyo 100-8071 Japan
(72)**Name of Inventor :**
1)Shuji YAMAMOTO
2)yasuhiro WADA
3)Mitsuharu YAMAGATA

(57) Abstract :
The press mold is provided with an inner punch (23) , an intermediate punch (24) disposed along the outer circumference of the inner punch (23) and having an intermediate punch inclined section (24a) on the leading end an outer punch (25) disposed along the outer circumference of the intermediate punch (24), and a die (27) having a die inclined section (27a) to face the intermediate punch inclined section (24a) , the central axes (20) of each being disposed on the same axis. Pressing in the edge of a bottomed container (22) using the outer punch (25) while the intermediate punch (24) is moved in the direction opposite to the direction in which the outer punch (25) is being pressed when the bottom of the bottomed container (22) is restricted by the inner punch (23) and the die (27) thickens the bottomed container inclined section (22a) of the bottomed container (22) that is clamped by the intermediate inclined section (24a) and the die inclined section (27a).

No. of Pages : 38 No. of Claims : 6

(12) PATENT APPLICATION PUBLICATION
(21) Application No.2530/DELNP/2012 A
(19) INDIA
(22) Date of filing of Application :23/03/2012
(43) Publication Date : 28/08/2015

(54) Title of the invention : RELAY STATION, RELAY METHOD, RADIO COMMUNICATION SYSTEM, AND RADIO COMMUNICATION APPARATUS

(51) International classification	:H04W 28/18	(71)**Name of Applicant :**
(31) Priority Document No	:2009-229480	**1)SONY CORPORATION**
(32) Priority Date	:01/10/2009	Address of Applicant :1-7-1 KONAN,MINATO-KU, TOKYO 108-0075, JAPAN Japan
(33) Name of priority country	:Japan	
(86) International Application No	:PCT/JP2010005715	(72)**Name of Inventor :**
Filing Date	:21/09/2010	**1)RYOTA KIMURA**
(87) International Publication No	:WO 2011/039970	
(61) Patent of Addition to Application Number	:NA	
Filing Date	:NA	
(62) Divisional to Application Number	:NA	
Filing Date	:NA	

(57) Abstract :
A relay node in a mobile communication network for relaying communications between a base station and a mobile terminal The relay node includes a first communication unit that communicates with the base station via a backhaul link using at least one of a first modulation method and a first multiplexing method, and a second communication unit that communicates with the mobile terminal via an access link using at least one of a second modulation method and a second multiplexing method. The relay node also includes a communication control unit that selects the at least one of the first modulation method and the first multiplexing method, or selects the at least one of the second modulation method and the second multiplexing method based on a characteristic of a link, a type of link or a type of data included in a communication signal.

No. of Pages : 64 No. of Claims : 22

(12) PATENT APPLICATION PUBLICATION
(21) Application No.1343/DEL/2012 A
(19) INDIA
(22) Date of filing of Application :02/05/2012
(43) Publication Date : 28/08/2015

(54) Title of the invention : HELIUM COMPRESSOR & COLD HEAD MONITORING DEVICE

(51) International classification :F25B
(31) Priority Document No :NA
(32) Priority Date :NA
(33) Name of priority country :NA
(86) International Application No :NA
Filing Date :NA
(87) International Publication No :NA
(61) Patent of Addition to Application Number :NA
Filing Date :NA
(62) Divisional to Application Number :NA
Filing Date :NA

(71)**Name of Applicant :**
1)VIKRAM GOEL
Address of Applicant :C/O KALA SAGAR, SECTOR 36-D, CHANDIGARH,UT-160036 Chandigarh India
(72)**Name of Inventor :**
1)VIKRAM GOEL

(57) Abstract :
The Helium Compressor & Coldhead Monitoring device monitors the status of both Helium compressor and Coldhead simultaneously. In case of odd eventuality with Helium compressor and Coldhead, the present device raised an alarm and apprised the user by generating sound and displaying the status of both Helium Compressor and Coldhead on a display. At the same time, it also saved all the events in a removable memory unit for further study and record. It also controls the power supply of other devices with a relay switch as per MRI manufacturers requirement in case of Coldhead or Helium compressor malfunctions. The present device when connected with internet through Ethernet can also send alert email messages on pre-stored email address. The present device also provides remote monitoring of both Helium compressor and Coldhead when connected with internet or network cable.

No. of Pages : 6 No. of Claims : 9

(12) PATENT APPLICATION PUBLICATION
(21) Application No.2317/DELNP/2015 A
(19) INDIA
(22) Date of filing of Application :21/03/2015
(43) Publication Date : 28/08/2015

(54) Title of the invention : THE HORSESHOE COMPATIBLE WITH THE FOOT BIOMECHANICS OF THE EQUIDAE

(51) International classification :A01L1/04,A01L7/02
(31) Priority Document No :2012/10735
(32) Priority Date :19/09/2012
(33) Name of priority country :Turkey
(86) International Application No :PCT/TR2013/000292
Filing Date :16/09/2013
(87) International Publication No :WO 2014/046634
(61) Patent of Addition to Application Number :NA
Filing Date :NA
(62) Divisional to Application Number :NA
Filing Date :NA

(71)**Name of Applicant :**
1)SERHAN ,Akman
Address of Applicant :Selcuk Universitesi Dis Hekimligi, Fakultesi, Protez Ana Bilim Dali, 42000 Konya Turkey
2)CELAL Izci
(72)**Name of Inventor :**
1)SERHAN, Akman
2)CELAL, Izci

(57) Abstract :
The invention is about a multi- part horseshoe (1 ,2) which is compatible with the natural biomechanics of the foot of the equdae (horse, ass and mule), and attached to the palmar surface (margo solearis) of the hooves , and prevents the breaking and wearing of hooves.

No. of Pages : 18 No. of Claims : 9

(12) PATENT APPLICATION PUBLICATION
(21) Application No.2318/DELNP/2015 A
(19) INDIA
(22) Date of filing of Application :21/03/2015
(43) Publication Date : 28/08/2015

(54) Title of the invention : A METHOD OF ENHANCING MANAGERIAL EFFECTIVENESS AND ORGANIZATIONAL SUSTAINABILITY

(51) International classification :G06Q90/00,G06Q10/00
(31) Priority Document No :NA
(32) Priority Date : -
(33) Name of priority country :
(86) International Application No :PCT/CA2012/050715
Filing Date :11/10/2012
(87) International Publication No :WO 2014/056067
(61) Patent of Addition to Application Number :NA
Filing Date :NA
(62) Divisional to Application Number :NA
Filing Date :NA

(71)**Name of Applicant :**
1)HADJIEV, Viktor
Address of Applicant :602- 9633, Manchester Drive, Burnaby, British Columbia V3N4Y9 Canada
(72)**Name of Inventor :**
1)HADJIEV, Viktor

(57) Abstract :
Cognitive topology is a business methodology enhancing managerial effectiveness and organizational sustainability. It is a system of cognitive indicators , which enables an organization to form managerial goals , initiate strategic changes and optimize managerial/organizational performance. This is achieved by determining the level of compatibility between the activities going in three main managerial perspectives - human relations, work environment and managerial processes on the one hand , and the particulars of the business situation, on the other hand. Behavioral features and characteristics are assigned a key place in creating Cognitive topology. They are the methodological nucleus, which enables the formation of managerial competencies and approaches that lead to optimal behavior and sustainable outcomes in business.

No. of Pages : 34 No. of Claims : 7

(12) PATENT APPLICATION PUBLICATION
(19) INDIA
(22) Date of filing of Application :21/03/2015
(21) Application No.2319/DELNP/2015 A
(43) Publication Date : 28/08/2015

(54) Title of the invention : SYSTEM AND METHOD FOR PROVIDING CONDITIONAL ACCESS TO TRANSMITTED INFORMATION

(51) International classification :H04L29/08
(31) Priority Document No :61/699800
(32) Priority Date :11/09/2012
(33) Name of priority country :U.S.A.
(86) International Application No :PCT/US2013/059102
Filing Date :10/09/2013
(87) International Publication No :WO 2014/043147
(61) Patent of Addition to Application Number :NA
Filing Date :NA
(62) Divisional to Application Number :NA
Filing Date :NA

(71)**Name of Applicant :**
1)NEXTNAV LLC
Address of Applicant :484 Oakmead Parkway, Sunnyvale ,California 94085 U.S.A.
(72)**Name of Inventor :**
1)VAJJHALA, Varaprasad;
2)JOSEPH, Deepak;
3)MEIYAPPAN, Subramanian;
4)RAGHUPATHY, Arun;

(57) Abstract :
This disclosure relates to systems, methods , computer program products ,and means that control access to position information at a receiver , or at another device external to the receiver , based on various considerations , including a requested service type , a user type, a device type, a software application type, a payment , and/or other characteristics associated with a particular software application or distributor of that software application. The disclosure further relates to systems , methods , computer program products and means for carrying out secure data transmissions intended for a particular application among other applications.

No. of Pages : 62 No. of Claims : 36

(12) PATENT APPLICATION PUBLICATION
(21) Application No.2538/DELNP/2012 A
(19) INDIA
(22) Date of filing of Application :23/03/2012
(43) Publication Date : 28/08/2015

(54) Title of the invention : METHOD FOR DETECTING MOLECULES THROUGH MASS SPECTROMETRY

(51) International classification :H01 49/26
(31) Priority Document No :0956662
(32) Priority Date :25/09/2009
(33) Name of priority country :France
(86) International Application No :PCT/FR2010/051919
Filing Date :15/09/2010
(87) International Publication No :WO 2011/03678
(61) Patent of Addition to Application Number :NA
Filing Date :NA
(62) Divisional to Application Number :NA
Filing Date :NA

(71)**Name of Applicant :**
1)BIOMERIUX
Address of Applicant :376 CHEMIN DE 1'ORME, F-69280 MARCY L'ETOILE, FRANCE France
2)UNIVERSITE CLAUDE BERNARD LYON I
3)CENTRE NATIONAL DE LA RECHERCHE SCIENTIFIQUE
(72)**Name of Inventor :**
1)JEROME LEMOINE
2)ARNAUD SALVADOR
3)JEAN-PHILIPE CARRIER
4)TANGUY FORTIN
5)PHILIPPE DUGOURD

(57) Abstract :
The present invention relates to a method for detecting at least one target molecule in a sample by mass spectrometry, in which: a) the molecules of the sample are ionized, b) the following steps (i) and (ii) are carried out n times, n being equal to 0, 1, 2, 3 or 4: (i) at least one ion obtained in the preceding step is selected, according to the target molecule, in a mass analyser, and (ii) the ion thus selected is fragmented in a fragmentation cell, c) at least two different ions obtained in step a) when n is zero, or in step b) when n is other than zero, are trapped in a mass analyser, the at least two ions thus trapped having a mass-to-charge ratio m/z characteristic of the target molecule, d) the characteristic ions thus trapped are ejected from the mass analyser, and e) the characteristic ions ejected are detected by means of a detection device. The method of the invention is characterized in that the characteristic ions are ejected simultaneously in step d) and detected simultaneously in step e).

No. of Pages : 45 No. of Claims : 13

(12) PATENT APPLICATION PUBLICATION
(21) Application No.10578/DELNP/2014 A
(19) INDIA
(22) Date of filing of Application :11/12/2014
(43) Publication Date : 28/08/2015

(54) Title of the invention : THERMOPLASTIC MEMBRANES INCLUDING POLYMER WITH ISOCYANATE REACTIVE FUNCTIONALITY

(51) International classification :B32B5/02,B32B7/12,B32B27/08
(31) Priority Document No :61/668783
(32) Priority Date :06/07/2012
(33) Name of priority country :U.S.A.
(86) International Application No :PCT/US2013/049547
Filing Date :08/07/2013
(87) International Publication No :WO 2014/008501
(61) Patent of Addition to Application Number :NA
Filing Date :NA
(62) Divisional to Application Number :NA
Filing Date :NA

(71)**Name of Applicant :**
1)FIRESTONE BUILDING PRODUCTS CO. LLC
Address of Applicant :250 West 96th Street Indianapolis Indiana 46260 U.S.A.
(72)**Name of Inventor :**
1)HUBBARD Michael John
2)KALWARA Joseph John

(57) Abstract :
A thermoplastic membrane comprising at least one layer wherein the at least one layer includes a first thermoplastic polymer and a second polymer having at least one isocyanate reactive substituent dispersed within said first thermoplastic polymer.

No. of Pages : 33 No. of Claims : 20

(12) PATENT APPLICATION PUBLICATION
(21) Application No.10579/DELNP/2014 A
(19) INDIA
(22) Date of filing of Application :11/12/2014
(43) Publication Date : 28/08/2015

(54) Title of the invention : BALL MILL HAVING SPATIAL UNBALANCE COMPENSATION

(51) International classification :B02C17/14,B02C17/24
(31) Priority Document No :102012105217.4
(32) Priority Date :15/06/2012
(33) Name of priority country :Germany
(86) International Application No :PCT/EP2013/062402
Filing Date :14/06/2013
(87) International Publication No :WO 2013/186372
(61) Patent of Addition to Application Number :NA
Filing Date :NA
(62) Divisional to Application Number :NA
Filing Date :NA

(71)**Name of Applicant :**
1)RETSCH GMBH
Address of Applicant :Retsch Allee 1 5 42781 Haan Germany
(72)**Name of Inventor :**
1)PANKRATZ J¼rgen
2)M„HLER Stefan
3)NIEWIND Matthias
4)JANETTA Frank

(57) Abstract :
The invention relates to a ball mill (10) comprising at least two milling cup retainers (13) arranged on a machine base plate (12) each milling cup retainer being designed for a milling cup (23) clamped in the milling cup retainer in a lying position each milling cup having end face milling cup ends and a filling of balls as milling bodies and comprising a drive that causes a rotational motion of the milling cup retainers (3) which ball mill is characterized in that each of the milling cup retainers which are arranged in pairs is put into restraint guided circular motion oriented parallel to the plane of the machine base plate by means of the drive via two eccentric shafts (25) connected to the milling cup retainers on faces opposite each other in relation to an axis of symmetry of the milling cup a counterweight (28) being arranged on each of the two eccentric shafts associated with a respective milling cup retainer and passing through the machine base plate below the machine base plate and on the face of the eccentric shaft opposite the connection of the milling cup retainer to the eccentric shaft in relation to the longitudinal axis of the eccentric shaft as a mass equalizer for the milling cup retainer connected to the eccentric shaft together with the milling cup (23) clamped in the milling cup retainer and that for the two milling cup retainers the eccentricities of the two eccentric shafts connected to the milling cup retainers are equal and the counterweights thereof are arranged on faces opposite each other in relation to the longitudinal axis of the milling cups and the milling cup retainers are put into an out of phase circular motion by means of the drive.

No. of Pages : 22 No. of Claims : 14

(12) PATENT APPLICATION PUBLICATION
(19) INDIA
(22) Date of filing of Application :21/03/2015
(21) Application No.2316/DELNP/2015 A
(43) Publication Date : 28/08/2015

(54) Title of the invention : TURBOCHARGER SHAFT SEAL

(51) International classification :F02B39/14,F02B39/00,F01D25/00
(31) Priority Document No :61/702328
(32) Priority Date :18/09/2012
(33) Name of priority country :U.S.A.
(86) International Application No :PCT/US2013/058923
Filing Date :10/09/2013
(87) International Publication No :WO 2014/046909
(61) Patent of Addition to Application Number :NA
Filing Date :NA
(62) Divisional to Application Number :NA
Filing Date :NA

(71)**Name of Applicant :**
1)BORGWARNER INC.
Address of Applicant :Patent Department, 3850 Hamlin Road, Auburn Hills, Michigan 48326 U.S.A.
(72)**Name of Inventor :**
1)CHEKANSKY, Jason W.;

(57) Abstract :
A seal (42 , 82) for a shaft (22) of a turbocharger (10) to prevent liquid from leaking out of a bearing housing (16). The seal (42 , 82) includes a cylindrical body extending between opposite end faces (116 ,118) and has a cylindrical bore extending between the opposite end faces (116, 118) for receiving the shaft (22) therethrough. The cylindrical bore defines an inner surface (106) having at least one striation (112) extending in a helical direction about the shaft (22). Rotation of the shaft (22) relative to the seal (42, 82) causes a pumping effect on liquid present between the shaft (22) and the inner surface (106) of the seal (42 , 82) , thereby causing the liquid to flow back towards the bearing housing (16).

No. of Pages : 17 No. of Claims : 15

(12) PATENT APPLICATION PUBLICATION
(19) INDIA
(22) Date of filing of Application :23/03/2012
(21) Application No.2540/DELNP/2012 A
(43) Publication Date : 28/08/2015

(54) Title of the invention : TYRE TREAD HAVING IMPROVED RIGIDITY

(51) International classification :B60C 11/12
(31) Priority Document No :0956752
(32) Priority Date :29/09/2009
(33) Name of priority country :France
(86) International Application No :PCT/EP2010/064375
Filing Date :28/09/2010
(87) International Publication No :WO 2011/039194
(61) Patent of Addition to Application Number :NA
Filing Date :NA
(62) Divisional to Application Number :NA
Filing Date :NA

(71)**Name of Applicant :**
1)SOCIETE DE TECHNOLOGIE MICHELIN
Address of Applicant :23 RUE BRESCHET, 63000 CLERMONT-FERRAND, FRANCE France
2)MICHELIN RECHERCHE ET TECHNIQUE S.A.
(72)**Name of Inventor :**
1)RICHARD AUDIGIER
2)STEPHANE ORAISON
3)MATHIEU VANDAELE
4)GILLES DOUET

(57) Abstract :
Tyre tread (10) having a tread surface (11), this tread comprising at least two wearing layers, this tread being characterized in that it is provided with at least one continuous groove (2) comprising a plurality of external cavities (21) opening onto the tread surface in the as-new condition and a plurality of internal cavities (22) placed radially and completely inside the tread surface (11) in the as-new condition, the external cavities (21). having a mean depth P1, a mean length L1 and a cross-sectional area S1, the internal cavities (22) having a mean height P2, a mean length L2 and a cross-sectional area S2, these external (21) and internal (22) cavities being such that: the difference between the mean lengths of the internal cavities and of the external cavities is at most equal to 20% of the longest mean length, the difference in the mean cross-sectional areas of the internal and external cavities is at most equal to 20% of the largest mean area, each external cavity (21) of a continuous groove (2) being connected to at least two internal cavities (22) of the same groove by connecting channels (23) that provide continuity between the said internal and said external cavities, this tread further comprising a plurality of incisions (30) opening onto the tread surface of the tread in the as-new condition, each of the said incisions connecting two consecutive external cavities of one and the same groove and at least two connecting channels and at least one internal cavity.

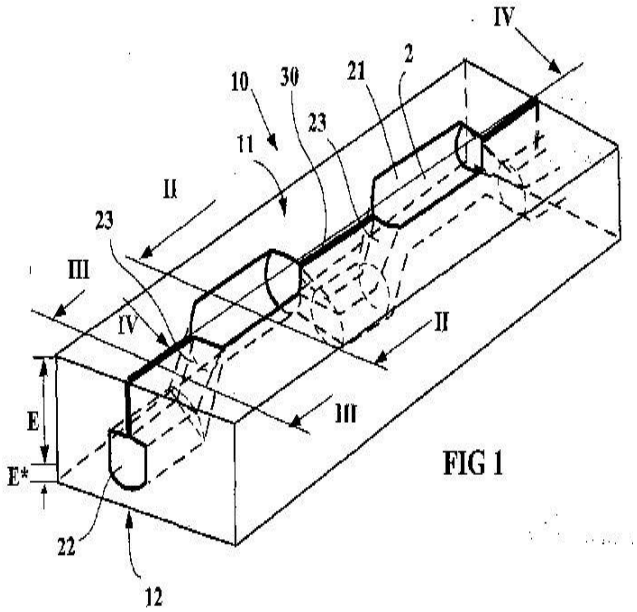

FIG 1

No. of Pages : 50 No. of Claims : 22

(12) PATENT APPLICATION PUBLICATION
(19) INDIA
(22) Date of filing of Application :22/03/2012
(21) Application No.2485/DELNP/2012 A
(43) Publication Date : 28/08/2015

(54) Title of the invention : METHODS FOR TREATING, DIAGNOSING, AND MONITORING RHEUMATOID ARTHRITIS

(51) International classification :C12Q 1/68
(31) Priority Document No :61/275948
(32) Priority Date :03/09/2009
(33) Name of priority country :U.S.A.
(86) International Application No :PCT/US2010/047734
Filing Date :09/02/2010
(87) International Publication No :WO 2011/028945
(61) Patent of Addition to Application Number :NA
Filing Date :NA
(62) Divisional to Application Number :NA
Filing Date :NA

(71)**Name of Applicant :**
1)F. HOFFMANN-LA ROCHE AG
Address of Applicant :GRENZACHERSTRASSE 124, CH-4070 BASEL, SWITZERLAND Switzerland
(72)**Name of Inventor :**
1)DENNIS JR., GLYNN
2)MARTIN, FLAVIUS
3)TOWNSEND, MICHAEL J.

(57) Abstract :
Methods of identifying, diagnosing, and prognosing rheumatoid arthritis are provided, as well as methods of treating rheumatoid arthritis. Also provided are methods for identifying effective rheumatoid arthritis therapeutic agents and predicting responsiveness to rheumatoid arthritis therapeutic agents.

No. of Pages : 197 No. of Claims : 77

(12) PATENT APPLICATION PUBLICATION
(21) Application No.2486/DELNP/2012 A
(19) INDIA
(22) Date of filing of Application :22/03/2012
(43) Publication Date : 28/08/2015

(54) Title of the invention : COMPOSITION HAVING LIPOLYSIS-PROMOTING EFFECT

(51) International classification :A61K 38/17
(31) Priority Document No :JP2009-230493
(32) Priority Date :02/10/2009
(33) Name of priority country :Japan
(86) International Application No :PCT/JP2010/005833
Filing Date :28/09/2010
(87) International Publication No :WO 2011/039999
(61) Patent of Addition to Application Number :NA
Filing Date :NA
(62) Divisional to Application Number :NA
Filing Date :NA

(71)**Name of Applicant :**
1)FINAL FUTURE INTERNATIONAL, INC.
Address of Applicant :2-5-11, HIGASHISAKURA, HIGASHI-KU, NAGOYA-SHI, AICHI 4610005, JAPAN Japan
(72)**Name of Inventor :**
1)XU SHANHUA

(57) Abstract :
An object of the present invention is to provide an orally ingestible composition that has a lipolysis-promoting effect and an angiotensin-converting enzyme (ACE) inhibitory effect and has no problems with safety as a food such as side effects or toxicity, and a food or drink and a supplement comprising the composition. As a result of diligent studies on various food materials to provide a composition for foods having a lipolysis-promoting effect and an ACE inhibitory effect, the present inventor has found that a composition prepared by using a salmon milt extract, a beer yeast extract, a young barley leaf extract, and chicken collagen in combination has an excellent lipolysis-promoting effect and an ACE inhibitory activity. A food or drink and a supplement having a lipolysis-promoting effect and an ACE inhibitory effect can be provided by using the composition of the present invention as an active ingredient.

No. of Pages : 28 No. of Claims : 8

(12) PATENT APPLICATION PUBLICATION
(21) Application No.2487/DELNP/2012 A
(19) INDIA
(22) Date of filing of Application :22/03/2012
(43) Publication Date : 28/08/2015

(54) Title of the invention : NOVEL N-SUBSTITUTED-PYRROLIDINES AS INHIBITORS OF MDM2-P-53 INTERACTIONS

(51) International classification :C07D 207/16
(31) Priority Document No :61/251,413
(32) Priority Date :21/10/2009
(33) Name of priority country :U.S.A.
(86) International Application No :PCT/EP2010/065159
Filing Date :10/11/2010
(87) International Publication No :WO 2011/045257
(61) Patent of Addition to Application Number :NA
Filing Date :NA
(62) Divisional to Application Number :NA
Filing Date :NA

(71)**Name of Applicant :**
1)F. HOFFMANN-LA ROCHE AG
Address of Applicant :GRENZACHERSTRASSE 124, CH-4070 BASEL, SWITZERLAND Switzerland
(72)**Name of Inventor :**
1)BARTKOVITS, DAVID JOSEPH
2)CHU, XIN-JIE
3)LIU, JIN-JUN
4)ROSS, TINA MORGAN
5)ZHANG, ZHUMING

(57) Abstract :
There are provided compounds of the formula wherein X, Y, R1, R2, R3, R3, R4, and R5 are as described herein and enantiomers and pharmaceutically acceptable salts and esters thereof which are useful as anticancer agents.

No. of Pages : 126 No. of Claims : 18

(12) PATENT APPLICATION PUBLICATION
(21) Application No.2560/DELNP/2012 A
(19) INDIA
(22) Date of filing of Application :23/03/2012
(43) Publication Date : 28/08/2015

(54) Title of the invention : HYDRAULIC POWER GENERATING APPARATUS

(51) International classification :F16B
(31) Priority Document No :2011-111809
(32) Priority Date :18/05/2011
(33) Name of priority country :Japan
(86) International Application No :PCT/JP2011/069889
Filing Date :01/09/2011
(87) International Publication No :NA
(61) Patent of Addition to Application Number :NA
Filing Date :NA
(62) Divisional to Application Number :NA
Filing Date :NA

(71)**Name of Applicant :**
1)UNNO, YUJI
Address of Applicant :C/O SEABELL INTERNATIONAL CO., LTD., 13-5, IWAMOTO-CHO 1-CHOME, CHIYODA-KU, TOKYO 1010032 (JP) Japan
(72)**Name of Inventor :**
1)UNNO, YUJI

(57) Abstract :
The present invention provides a hydraulic power generating apparatus capable of adjusting a water level at the upstream side and supplying a stable power generation amount with easy maintenance. The hydraulic power generating apparatus 1 of the present invention includes a water collecting plate 6 which collects water into a water inflow opening 8 while intercepting and accumulating water flowing through a waterway, and a movable gate 5 which is capable of changing flow cross-sectional area of water flow acting to the top ends of rotor blades 33 of a vertical axis turbine 3 as inflowing from the water inflow opening 8. Here, owing to changing of flow cross-sectional area with opening and closing of the movable gate 5, a flow rate can be adjusted by changing a water level at the upstream side and opening area of an orifice hole and operation of the rotor blades 33 can be stopped by blocking water passing toward the vertical axis turbine 3.

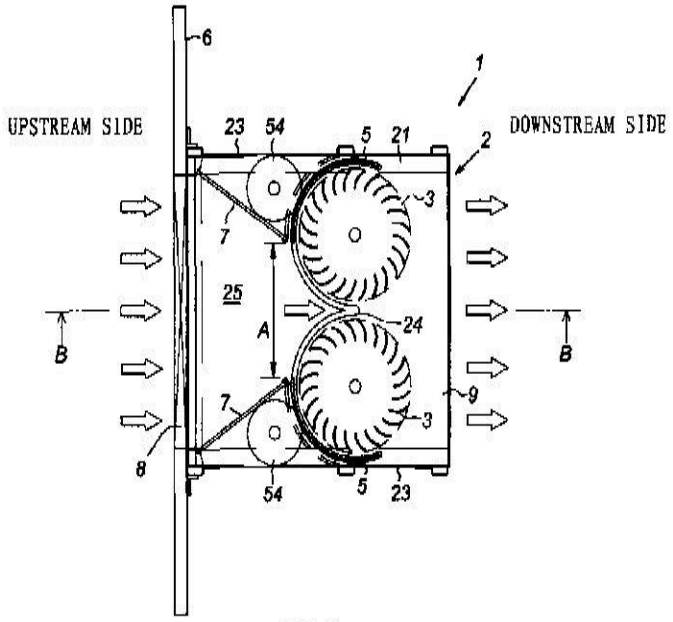

FIG. 1

No. of Pages : 52 No. of Claims : 6

(12) PATENT APPLICATION PUBLICATION
(21) Application No.2561/DELNP/2012 A
(19) INDIA
(22) Date of filing of Application :23/03/2012
(43) Publication Date : 28/08/2015

(54) Title of the invention : MULTI-PROCESSOR BASED PROGRAMMABLE LOGIC CONTROLLER AND METHOD FOR OPERATING THE SAME

(51) International classification :G05B 19/042
(31) Priority Document No :12/571,142
(32) Priority Date :30/09/2009
(33) Name of priority country :U.S.A.
(86) International Application No :PCT/US2010/049468
Filing Date :20/09/2010
(87) International Publication No :WO 2011/041150
(61) Patent of Addition to Application Number :NA
Filing Date :NA
(62) Divisional to Application Number :NA
Filing Date :NA

(71)**Name of Applicant :**
1)GENERAL ELECTRIC COMPANY
Address of Applicant :1 RIVER ROAD, SCHENECTADY, NEW YORK 12345, U.S.A. U.S.A.
(72)**Name of Inventor :**
1)SHANG, WEIHUA
2)LIU, YONGZHI
3)LUECKENBACH, WILLIAM HENRY
4)LIU, LI
5)ZHANG, YU

(57) Abstract :
A programmable logic processor (PLC) with multiple PLC functions is disclosed. The PLC includes at least one memory storing at least one of a plurality of programs or data, and one or more processor assigned to each of the PLC function and couple to the memory. The PLC functions are run in parallel. A method of operating the PLC and a PLC system with multiple processors are also disclosed.

No. of Pages : 37 No. of Claims : 24

(12) PATENT APPLICATION PUBLICATION
(21) Application No.2490/DELNP/2012 A
(19) INDIA
(22) Date of filing of Application :22/03/2012
(43) Publication Date : 28/08/2015

(54) Title of the invention : METHOD FOR FORMING A PROTECTIVE COATING CONTAINING ALUMINIUM ON THE SURFACE OF A METAL PART

(51) International classification	:C23C 10/28
(31) Priority Document No	:0956446
(32) Priority Date	:18/09/2009
(33) Name of priority country	:France
(86) International Application No	:PCT/EP2010/063827
Filing Date	:20/09/2010
(87) International Publication No	:WO 2011/033116
(61) Patent of Addition to Application Number	:NA
Filing Date	:NA
(62) Divisional to Application Number	:NA
Filing Date	:NA

(71)**Name of Applicant :**
1)SNECMA
Address of Applicant :2 BOULEVARD DU GENERAL MARTIAL VALIN, F-75015, PARIS, FRANCE France
2)ONERA (OFFICE NATIONAL D' ETUDES ET DE RECHERCHES AEROSPATIALES)
(72)**Name of Inventor :**
1)JEROME BROSSIER
2)JUSTINE MENUEY
3)ANNIE PASQUET
4)SERGE NAVEOS
5)MARIE-PIERRE BACOS
6)PIERRE JOSSO

(57) Abstract :
The present invention relates to a method for forming a protective coating containing aluminum on the Surface of a metal part wherein said part is contacted with a carburizer made of an aluminum alloy, at a treatment temperature and in a chamber, the atmosphere of which contains an active gas which reacts with the carburizer to form a gaseous aluminum hulide, which decomposes upon contacting the part while depositing aluminum metal thereon. The method is characterized in that the aluminum alloy of the carburizcr includes at least one element, zirconium and/or hafnium, the active gas reacting with the carburizcr to also form a halide of the reactive element which decomposes upon contacting the part while depositing said element thereon at the same time as the aluminum.

No. of Pages : 10 No. of Claims : 11

(12) PATENT APPLICATION PUBLICATION
(21) Application No.2491/DELNP/2012 A
(19) INDIA
(22) Date of filing of Application :22/03/2012
(43) Publication Date : 28/08/2015

(54) Title of the invention : COMPOSITE LAYERED HEMOSTASIS DEVICE

(51) International classification :A61L 15/16
(31) Priority Document No :12/564,298
(32) Priority Date :22/09/2009
(33) Name of priority country :U.S.A.
(86) International Application No :PCT/US2010/048336
Filing Date :10/09/2010
(87) International Publication No :WO 2011/037760
(61) Patent of Addition to Application Number :NA
Filing Date :NA
(62) Divisional to Application Number :NA
Filing Date :NA

(71)**Name of Applicant :**
1)ETHICON, INC.
Address of Applicant :U.S. ROUTE 22, SOMERVILLE, NJ 08876, UNITED STATES OF AMERICA U.S.A.
(72)**Name of Inventor :**
1)SASA ANDJELIC

(57) Abstract :
The present invention is directed to a hemostatic composite structure having a bioabsorbable fabric or non-woven substrate having at least two major oppositely facing surface areas and a continuous non-porous polymer-based film that is laminated on one major surface of said substrate. The bioabsorbable fabric substrate can be an oxidized polysaccharide and/or the non-woven substrate can be made from bioabsorbable, non-cellulosic derived polymers. The continuous non-porous polymer based film can be a bioabsorbable polymer. The present invention also relates to a method for providing hemostasis by applying a composite structure described herein onto a wound site in need of a hemostatic device wherein a major surface of the substrate without the film layer is applied onto the wound site.

No. of Pages : 33 No. of Claims : 17

(12) PATENT APPLICATION PUBLICATION
(21) Application No.2562/DELNP/2012 A
(19) INDIA
(22) Date of filing of Application :23/03/2012
(43) Publication Date : 28/08/2015

(54) Title of the invention : INTERNET-BASED METHOD AND APPARATUS FOR CAREER AND PROFESSIONAL DEVELOPMENT VIA SIMULATED INTERVIEWS

(51) International classification :G06Q 10/00
(31) Priority Document No :61/236,756
(32) Priority Date :25/08/2009
(33) Name of priority country :U.S.A.
(86) International Application No :PCT/US2010/046524
Filing Date :24/08/2010
(87) International Publication No :WO 2011/031456
(61) Patent of Addition to Application Number :NA
Filing Date :NA
(62) Divisional to Application Number :NA
Filing Date :NA

(71)**Name of Applicant :**
1)VMOCK, INC.
Address of Applicant :424 WEST MELROSE STREET, #15A CHICAGO, IL 60657, U.S.A. U.S.A.
(72)**Name of Inventor :**
1)PANDE, SALIL

(57) Abstract :
Methods and apparatus for generating feedback, reviewing feedback, and conducting interviews by use of VMocks are provided. A VMock, or Virtual Mock, is a virtual profile of a candidate that includes resume, text, video and a document. VMock profiles may be created that have one or more VMocks. Contacts associated with the VMock profile may be managed. Feedback may be requested from the contacts concerning the one or more VMocks, who may then generate the requested feedback. The feedback may then be reviewed. This feedback process may be performed in the context of interviews for employment opportunities and in other similar situations.

No. of Pages : 72 No. of Claims : 20

(12) PATENT APPLICATION PUBLICATION
(19) INDIA
(22) Date of filing of Application :23/03/2012
(21) Application No.2563/DELNP/2012 A
(43) Publication Date : 28/08/2015

(54) Title of the invention : METHOD AND SYSTEM FOR MANUFACTURING METAL-PLATED STEEL PIPE

(51) International classification :C23C 2/38
(31) Priority Document No :PCT/JP2009/065062
(32) Priority Date :28/08/2009
(33) Name of priority country :PCT
(86) International Application No :PCT/JP2009/065062
Filing Date :28/08/2009
(87) International Publication No :WO 2011-024290
(61) Patent of Addition to Application Number :NA
Filing Date :NA
(62) Divisional to Application Number :NA
Filing Date :NA

(71)**Name of Applicant :**
1)DAIWA STEEL TUBE INDUSTRIES CO., LTD.,
Address of Applicant :NK BLDG. 6F, 2-8-12, IWAMOTO-CHO, CHIYODA-KU, TOKYO 1010032, JAPAN Japan
(72)**Name of Inventor :**
1)NAKAMURA, SHINICHIRO
2)TAMAMURA, TADAYOSHI

(57) Abstract :
To provide a system and a method capable of easily adjusting a dipping time in a continuous steel pipe manufacturing line. Provided is a steel pipe manufacturing system that manufactures a steel pipe of which inner and outer faces or any one face thereof is subjected to molten metal-plating from a steel sheet in a continuous manufacturing line, the system including: an inner-face plating performing part that performs molten metal-plating by pouring molten metal to the upper side of the steel sheet corresponding to the inner face of the steel pipe; a steel pipe forming part that obtains a continuous steel pipe by continuously cold-forming the steel sheet subjected to the inner-face plating into a tubular shape and seam-welding a longitudinal end face joint portion of the steel sheet formed in the steel pipe; and an outer-face plating performing part that performs molten metal-plating by dipping the outer face of the steel pipe into the molten metal, in which a dipping length of the molten metal is adjusted in the inner-face plating performing part and/or the outer-face plating performing part.

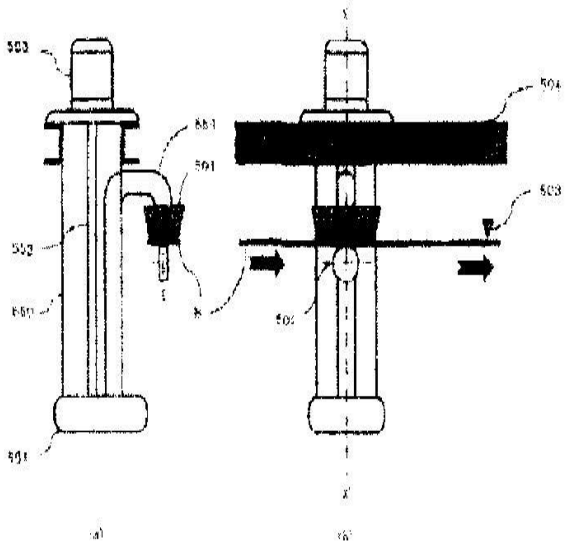

No. of Pages : 46 No. of Claims : 15

(12) PATENT APPLICATION PUBLICATION
(21) Application No.2496/DELNP/2012 A
(19) INDIA
(22) Date of filing of Application :22/03/2012
(43) Publication Date : 28/08/2015

(54) Title of the invention : IMPROVEMENTS IN SECURITY DEVICES

(51) International classification :B42D 15/00
(31) Priority Document No :0919138.8
(32) Priority Date :30/10/2009
(33) Name of priority country :U.K.
(86) International Application No :PCT/GB2010/002008
Filing Date :29/10/2010
(87) International Publication No :WO 2011/051682
(61) Patent of Addition to Application Number :NA
Filing Date :NA
(62) Divisional to Application Number :NA
Filing Date :NA

(71)**Name of Applicant :**
1)DE LA RUE INTERNATIONAL LIMITED
Address of Applicant :DE LA RUE HOUSE, JAYS CLOSE, BASINGSTOKE, HAMPSHIRE RG22 4BS, UNITED KINGDOM U.K.
(72)**Name of Inventor :**
1)ADAM LISTER

(57) Abstract :
The present invention relates to improvements in security devices that can be used in for various authend security applications, and in particular to an optically variable security device utilising multiple colour shift layers. The security device comprises a first colourshifting layer and a second colourshifting layer which exhibits different reflective characteristics to the first colourshifting layer. A partial first light absorbing layer is between first surfaces of the first and second colourshifting lay¬ers and a second light absorbing layer applied to a second surface of the second colourslifting layer. The colour of the partial first absorbing layer is selected to substantially match the colour of light reflected at a normal angle of incidence by the combination of the second colourshifting layer and the second absorbing layer.

No. of Pages : 29 No. of Claims : 28

(12) PATENT APPLICATION PUBLICATION
(19) INDIA
(22) Date of filing of Application :22/03/2012
(21) Application No.2497/DELNP/2012 A
(43) Publication Date : 28/08/2015

(54) Title of the invention : APPARATUS AND FOLDING MEANS FOR WRAPPING A LOLLIPOP

(51) International classification	:B65B 11/54
(31) Priority Document No	:09012019.7
(32) Priority Date	:22/09/2009
(33) Name of priority country	:EUROPEAN UNION
(86) International Application No	:PCT/EP2010/005788
Filing Date	:22/09/2010
(87) International Publication No	:WO 2011/035895
(61) Patent of Addition to Application Number	:NA
Filing Date	:NA
(62) Divisional to Application Number	:NA
Filing Date	:NA

(71)**Name of Applicant :**
1)CFS WEERT B.V.
Address of Applicant :DE FUUS NO. 8, NL-6006 RV, WEERT, NETHERLAND Netherlands
(72)**Name of Inventor :**
1)SEFERINUS JELLE ASMA

(57) Abstract :
The present invention is related to an apparatus for wrapping a lollipop with a stick in a wrapping material by twisting, said apparatus being provided with: a lollipop-holder, which is rotatable around an axis and which is preferably axially movable to and fro, a pair of folding means being continuously rotatable, synchronously with the lollipop holder around the axis, the folding means defining both a folding opening and are movable relative to each other to increase and reduce the folding open¬ing means for feeding wrapping material between the folding means and the lollipop holder and for cutting the wrapping material and twisting means, continuously rotatable around axis, synchronously with the lollipop holder, for twisting one end of the wrap¬ping material round the lollipop stick. The present invention is further related to an apparatus for wrapping a lollipop with a stick in a wrapping material by twisting said apparatus being provided with a lollipop-holder, which is rotatable around an axis and which is preferably axially movable to and fro, a pair of folding means being continuously rotatable, synchronously with the lol¬lipop holder around the axis, the folding means defining both a folding opening and are movable relative to each other to increase and reduce the folding opening.

No. of Pages : 17 No. of Claims : 7

(12) PATENT APPLICATION PUBLICATION
(19) INDIA
(22) Date of filing of Application :23/03/2012
(21) Application No.2571/DELNP/2012 A
(43) Publication Date : 28/08/2015

(54) Title of the invention : PRODUCTION OF FATTY ACID DERIVATIVES

(51) International classification :C12P 7/64
(31) Priority Document No :61/245,943
(32) Priority Date :25/09/2009
(33) Name of priority country :U.S.A.
(86) International Application No :PCT/US2010/050024
Filing Date :23/09/2010
(87) International Publication No :WO 2011/038132
(61) Patent of Addition to Application Number :NA
Filing Date :NA
(62) Divisional to Application Number :NA
Filing Date :NA

(71)**Name of Applicant :**
1)LS9, INC.
Address of Applicant :LEGAL DEPARTMENT, 600 GATEWAY BLVD., SOUTH SAN FRANCISCO, CA 94080, U.S.A. U.S.A.
(72)**Name of Inventor :**
1)GAERTNER, ALFRED

(57) Abstract :
Methods and compositions for producing fatty acid derivatives, for example, fatty esters, and commercial fuel compositions comprising fatty acid derivatives are described.

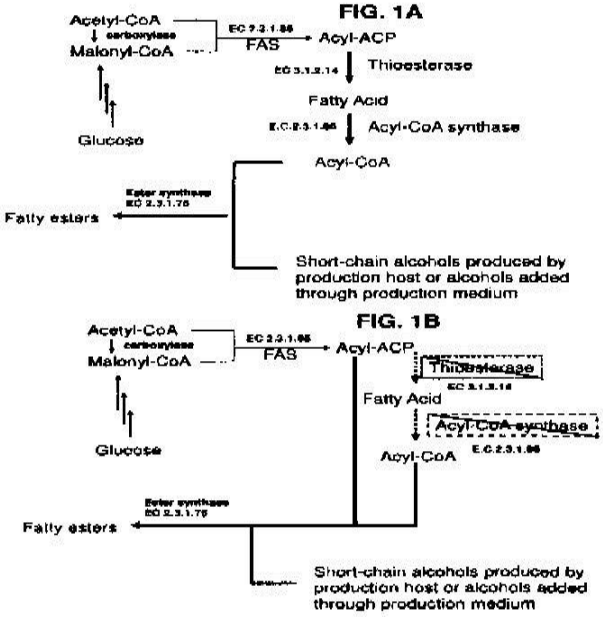

No. of Pages : 525 No. of Claims : 118

(12) PATENT APPLICATION PUBLICATION
(19) INDIA
(22) Date of filing of Application :23/03/2012
(21) Application No.2572/DELNP/2012 A
(43) Publication Date : 28/08/2015

(54) Title of the invention : STATOR ASSEMBLY

(51) International classification :H02K 1/16
(31) Priority Document No :12/568,742
(32) Priority Date :29/09/2009
(33) Name of priority country :U.S.A.
(86) International Application No :PCT/US2010/042546
Filing Date :20/07/2010
(87) International Publication No :WO 2011/041014
(61) Patent of Addition to Application Number :NA
Filing Date :NA
(62) Divisional to Application Number :NA
Filing Date :NA

(71)**Name of Applicant :**
1)AMERICAN SUPERCONDUCTOR CORPORATION
Address of Applicant :64 JACKSON ROAD DEVENS, MA 01432 UNITED STATES OF AMERICA U.S.A.
(72)**Name of Inventor :**
1)SNITCHLER, GREGORY L.
2)MACDONALD, TIMOTHY

(57) Abstract :
A stator assembly (100) for use in a superconducting generator (10) operated at frequencies up to 10 Hz is disclosed. The stator assembly includes a ferromagnetic stator winding support (102) having a plurality of teeth (112) defining slots (114), the slots configured to receive and support stator windings (130). The stator winding support is formed so that the ratio of the sum of the widths of the slots to the sum of the widths of the teeth and slots is in the range of 0.65 to 0.90.

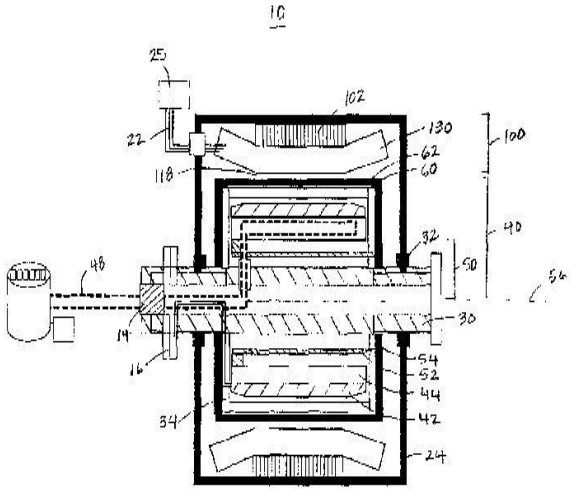

FIG.1

No. of Pages : 32 No. of Claims : 15

(12) PATENT APPLICATION PUBLICATION
(19) INDIA
(22) Date of filing of Application :23/03/2012
(21) Application No.2573/DELNP/2012 A
(43) Publication Date : 28/08/2015

(54) Title of the invention : TORQUE ROD

(51) International classification :F16F 15/08
(31) Priority Document No :2009-221162
(32) Priority Date :25/09/2009
(33) Name of priority country :Japan
(86) International Application No :PCT/JP2010/005772
Filing Date :24/09/2010
(87) International Publication No :WO 2011/036890
(61) Patent of Addition to Application Number :NA
Filing Date :NA
(62) Divisional to Application Number :NA
Filing Date :NA

(71)**Name of Applicant :**
1)BRIDGESTONE CORPORATION
Address of Applicant :10-1, KYOBASHI 1-CHOME, CHUO-KU, TOKYO 104-8340, JAPAN Japan
(72)**Name of Inventor :**
1)SUGAWARA HIDEKI
2)OKAJIMA YOSHICHIKA

(57) Abstract :
Provided is a torque rod capable of reducing the yield rate while enhancing the strength of an outer cylinder of a bush. The torque rod includes a large-diameter bush 5 and a small-diameter bush 6 connected to each other by a linkage member 4 and each having an inner cylinder 2 and an outer cylinder 7, 8, the large-diameter bush and the small-diameter bush having mutually perpendicular axial directions. The linkage member 4 is formed as a combinedly joined body obtained by plastically fabricating two metal plates, and ther large-diameter bush 5 is provided with a protrusion 9 on an outer periphery of the outer cylinder.

FIG. 1

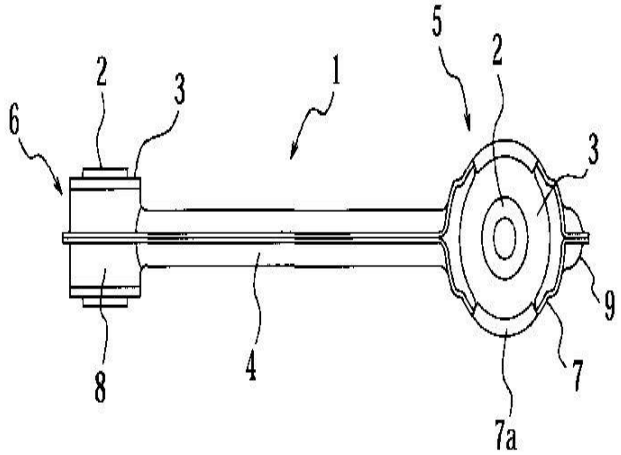

No. of Pages : 12 No. of Claims : 4

(12) PATENT APPLICATION PUBLICATION
(19) INDIA
(22) Date of filing of Application :22/03/2012
(21) Application No.2502/DELNP/2012 A
(43) Publication Date : 28/08/2015

(54) Title of the invention : TETRACYCLINE COMPOUNDS

(51) International classification :C07C 237/26
(31) Priority Document No :61/275,507
(32) Priority Date :28/08/2009
(33) Name of priority country :U.S.A.
(86) International Application No :PCT/US2010/047035
Filing Date :27/08/2010
(87) International Publication No :WO 2011/025982
(61) Patent of Addition to Application Number :NA
Filing Date :NA
(62) Divisional to Application Number :NA
Filing Date :NA

(71)**Name of Applicant :**
1)TETRAPHASE PHARMACEUTICALS, INC.
Address of Applicant :480 ARSENAL STREET, SUITE 110, WATERTOWN, MA 02472, UNITED STATES OF AMERICA U.S.A.
(72)**Name of Inventor :**
1)DENG, YONGHONG
2)PLAMONDON, LOUIS
3)SUN, CUIXIANG
4)NA
5)XIAO, XIAO-YI
6)ZHOU, JINGYE
7)SUTCLIFFE, JOYCE, A.
8)RONN, MAGNUS, P.

(57) Abstract :
The present invention is directed to a compound represented by Structural Formula (1): or a pharmaceutically acceptable salt thereof. The variables for Structural Formula (I) are defined herein. Also described is a pharmaceutical composition comprising the compound of Structural Formula (I) and its therapeutic use.

No. of Pages : 187 No. of Claims : 22

(12) PATENT APPLICATION PUBLICATION
(19) INDIA
(22) Date of filing of Application :22/03/2012
(21) Application No.2503/DELNP/2012 A
(43) Publication Date : 28/08/2015

(54) Title of the invention : BACKREST, IN PARTICULAR FOR A REAR SEAT ARRANGEMENT OF A MOTOR VEHICLE

(51) International classification :B60N 2/36
(31) Priority Document No :10 2009 050 839.2
(32) Priority Date :20/10/2009
(33) Name of priority country :Germany
(86) International Application No :PCT/EP2010/005262
Filing Date :27/08/2010
(87) International Publication No :WO 2011/047748
(61) Patent of Addition to Application Number :NA
Filing Date :NA
(62) Divisional to Application Number :NA
Filing Date :NA

(71)**Name of Applicant :**
1)KEIPER GMBH & CO. KG
Address of Applicant :HERTELSBRUNNENRING 2, 67657 KAISERSLAUTERN, GERMANY Germany
(72)**Name of Inventor :**
1)NASSHAN JURGEN
2)MUHLBERGER, JOACHIM
3)NIEDERMEIER, ANTON

(57) Abstract :
A backrest, in particular for a rear seat arrangement of a motor vehicle, has a shell (2), which has a width which extends over at least two seats, and at least two lower and at least one upper connecting point (A), wherein the shell (2) has a base matrix which is composed of a thermoplastic and is formed with a supporting structure (4') which has a shape which completely surrounds the shell (2) on two sides which are adjacent to one another and partially surrounds the shell on each of the sides directly adjoining said two sides, and, starting from the common corner of the sides which are adjacent to one another and are completely surrounded by the supporting structure (4') on the outside, runs obliquely to an end, which ends in the intermediate region between the seats, of one of the sides which is partially surrounded by the supporting structure (4'), and the supporting structure (4') connects the three connecting points (A) to one another. FIG. 2

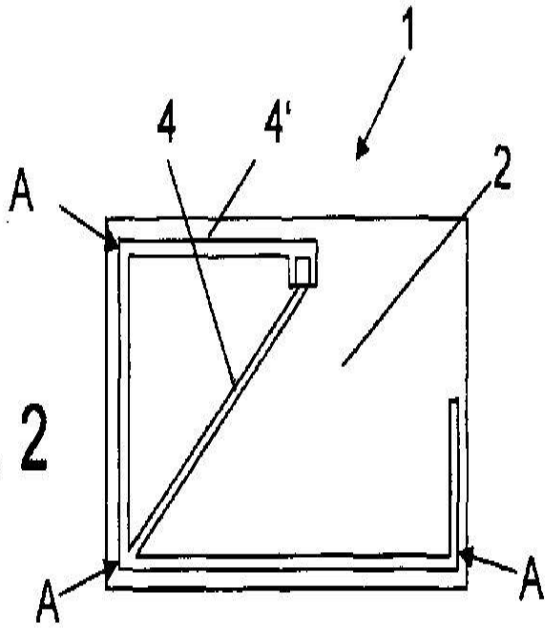

Fig. 2

No. of Pages : 29 No. of Claims : 12

(12) PATENT APPLICATION PUBLICATION
(19) INDIA
(22) Date of filing of Application :22/03/2012
(21) Application No.2504/DELNP/2012 A
(43) Publication Date : 28/08/2015

(54) Title of the invention : LOAD-ADJUSTMENT FACTOR NOTIFICATION METHOD, DATA RATE CONTROL (DRC)-POINTINGDETERMINATION METHOD, HANDOVER DETERMINATION METHOD AND DEVICES THEREOF

(51) International classification :H04W 72/02
(31) Priority Document No :200910093862.2
(32) Priority Date :22/09/2009
(33) Name of priority country :China
(86) International Application No :PCT/CN2010/076966
Filing Date :15/09/2010
(87) International Publication No :WO 2011/035697
(61) Patent of Addition to Application Number :NA
Filing Date :NA
(62) Divisional to Application Number :NA
Filing Date :NA

(71)**Name of Applicant :**
1)ZTE CORPORATION
Address of Applicant :ZTE PLAZA, KEJI ROAD, SOUTH, HI-TECH INDUSTRIAL PARK, NANSHAN DISTRICT, SHENZHEN CITY, GUANGDONG PROVINCE 518057, P.R. CHINA China
(72)**Name of Inventor :**
1)FANG, YONGGANG
2)LU, TING
3)YU, YUANFANG
4)ZHAO, XIAOWN

(57) Abstract :
The present invention discloses a method for notifying a load-adjustment factor, including: a base station setting a load-adjustment factor of a sector and notifying a user terminal. The present invention also discloses a method for selecting and determining Data Rate Control (DRC) pointing, including: when selecting a sector which a DRC points towards, a user terminal calculating a difference value by deducting the received load-adjustment factor of the sector sent by a base station, from the measured signal measurement strength of the sector; the user terminal determining whether to point the DRC towards the sector according to the signal measurement strength resulted from the deduction. The present invention also discloses a method for determining sector handover, including: when selecting to handover-add or handover-drop a sector, a user terminal calculating a difference value by deducting the received load-adjustment factor of sector, which is sent by the base station, from the measured signal measurement strength of the sector; the user terminal determining whether to handover-add or handover-drop the sector according to the signal measurement strength resulted from the deduction. The present invention correspondingly discloses an apparatus for implementing said methods. Quality of service in a CDMA system is improved in the present invention.

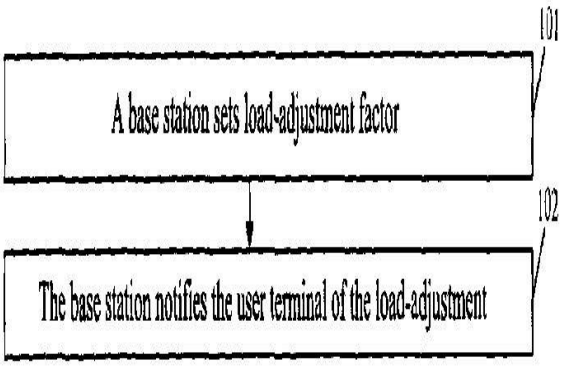

FIG. 1

No. of Pages : 29 No. of Claims : 17

(12) PATENT APPLICATION PUBLICATION
(21) Application No.2577/DELNP/2012 A
(19) INDIA
(22) Date of filing of Application :23/03/2012
(43) Publication Date : 28/08/2015

(54) Title of the invention : PYRROLO[2,3-D] PYRIMIDINE COMPOUNDS

(51) International classification :C07D 487/04
(31) Priority Document No :61/252,039
(32) Priority Date :15/10/2009
(33) Name of priority country :U.S.A.
(86) International Application No :PCT/IB2010/054447
Filing Date :01/10/2010
(87) International Publication No :WO 2011/045702
(61) Patent of Addition to Application Number :NA
Filing Date :NA
(62) Divisional to Application Number :NA
Filing Date :NA

(71)**Name of Applicant :**
1)PFIZER INC.
Address of Applicant :235 EAST 42ND STREET, NEW YORK, NEW YORK 10017, U.S.A. U.S.A.
(72)**Name of Inventor :**
1)ACKER BRAD ALAN
2)HARTMANN SUSAN J.
3)HUANG HORNG-CHIH
4)JACOBSEN ERIC JON
5)PROMO MICHELE ANN
6)WOLFSON SERGEY GREGORY
7)XIE JIN

(57) Abstract :
Described herein are pyrrolo[2,3-d]pyrimidine compounds, their use as Janus Kinase (JAK) inhibitors, pharmaceutical compositions containing these compounds, and methods for their preparation.

No. of Pages : 113 No. of Claims : 33

(12) PATENT APPLICATION PUBLICATION
(21) Application No.2578/DELNP/2012 A
(19) INDIA
(22) Date of filing of Application :23/03/2012
(43) Publication Date : 28/08/2015

(54) Title of the invention : PNEUMATIC TIRE

(51) International classification :B60C 13/00
(31) Priority Document No :2009-234573
(32) Priority Date :08/10/2009
(33) Name of priority country :Japan
(86) International Application No :PCT/JP2010/005902
Filing Date :30/09/2010
(87) International Publication No :WO 2011/043041
(61) Patent of Addition to Application Number :NA
Filing Date :NA
(62) Divisional to Application Number :NA
Filing Date :NA

(71)**Name of Applicant :**
1)BRIDGESTONE CORPORATION
Address of Applicant :10-1, KYOBASHI 1-CHOME, CHUO-KU, TOKYO 1048340, JAPAN Japan
(72)**Name of Inventor :**
1)KATAYAMA SHINASAKU

(57) Abstract :
There is provided a pneumatic tire having excellent uneven wear resistance performance, low rolling resistance and durability of side portion's appearance. The pneumatic tire comprises a carcass as a framework consisting of at least one carcass ply troidally extending between bead portions embedded with a pair of bead cores and turned around the bead cores from an inner side to an outer side in a tire width direction, a belt comprising at least one inclined belt layer and a tread successively disposed on a radially outer side of a crown portion of the carcass, wherein a ratio BD/BW is in a range between 0.01 and 0.04 in a section of the tire in the width direction in a state where the tire is mounted on an application rim, where BD is radius difference between radius at a central portion and radius at an end portion in the tire width direction of the outermost layer of the inclined belt layer and BW is a width of the outermost layer and CSEh is larger than SWh, where CSEh is a shortest distance from an end of a turn-up portion of the at least one carcass ply to a line drawn in parallel with a tire rotation axis at a bead toe and SWh is a shortest distance between a line drawn in parallel with the tire rotation axis at a maximum width position of the tire and the line drawn in parallel with the tire rotation axis at the bead toe.

No. of Pages : 34 No. of Claims : 5

(12) PATENT APPLICATION PUBLICATION
(21) Application No.2354/DELNP/2015 A
(19) INDIA
(22) Date of filing of Application :23/03/2015
(43) Publication Date : 28/08/2015

(54) Title of the invention : PILOT SIGNAL TRANSMISSION METHOD, ASSOCIATED TRANSMIT- RECEIVE POINT, PILOT SIGNAL RECEPTION METHOD AND ASSOCIATED USER EQUIPMENT

(51) International classification	:H04L25/02,H04B7/04	(71)**Name of Applicant :**
(31) Priority Document No	:PCT/CN2012/084582	**1)TELEFONAKTIEBOLAGET L M ERICSSON (PUBL)**
(32) Priority Date	:14/11/2012	Address of Applicant :Se -164 83, Stockholm Sweden
(33) Name of priority country	:China	(72)**Name of Inventor :**
(86) International Application No	:PCT/CN2013/085442	**1)GU, Xinyu**
Filing Date	:18/10/2013	**2)MIAO, Qingyu;**
(87) International Publication No	:WO 2014/075532	**3)ZHANG, Zhang;**
(61) Patent of Addition to Application Number	:NA	
Filing Date	:NA	
(62) Divisional to Application Number	:NA	
Filing Date	:NA	

(57) Abstract :
The present disclosure discloses a pilot signal transmission method in a wireless communication system and an associated Transmit- Receive Point (TRP). The method comprises transmitting a periodic pilot signal for channel estimation from at least one TRP in the proximity of a User Equipment (UE) within a combined cell, when the UE is not scheduled for data transmission. The method further comprises transmitting a pilot signal for demodulation from the same TRP , when the UE is scheduled for data transmission. The transmission power of the periodic pilot signal for channel estimation is lower than that of the pilot signal for demodulation. The present disclosure further provides a pilot signal reception method in a wireless communication network and an associated UE.

No. of Pages : 24 No. of Claims : 13

(12) PATENT APPLICATION PUBLICATION
(19) INDIA
(22) Date of filing of Application :22/03/2012
(21) Application No.2500/DELNP/2012 A
(43) Publication Date : 28/08/2015

(54) Title of the invention : METHOD AND SYSTEM FOR SPECTRAL IMAGE CELESTIAL NAVIGATION

(51) International classification :G01C 21/02
(31) Priority Document No :12/570916
(32) Priority Date :30/09/2009
(33) Name of priority country :U.S.A.
(86) International Application No :PCT/US2010/044632
Filing Date :06/08/2010
(87) International Publication No :WO 2011/041022
(61) Patent of Addition to Application Number :NA
Filing Date :NA
(62) Divisional to Application Number :NA
Filing Date :NA

(71)**Name of Applicant :**
1)GE AVIATION SYSTEMS LLC
Address of Applicant :3290 PATTERSON AVENUE, SE GRAND RAPIDS, MICHIGAN 49512-1991, USA U.S.A.
(72)**Name of Inventor :**
1)BRACE, TERRELL MICHAEL

(57) Abstract :
A method and system for a multi-spectrum celestial navigation system includes a first sensor responsive to at least a first and a second wavelength band of electromagnetic radiation. The sensor is configured to generate a first output related to the first wavelength band of electromagnetic radiation and to generate a second output related to the second wavelength band of electromagnetic radiation. The system also includes a processor programmed to receive the first and second outputs, determine a position of the sensor with respect to one or more stars using a stored star catalog and the received first and second outputs, and output the determined position.

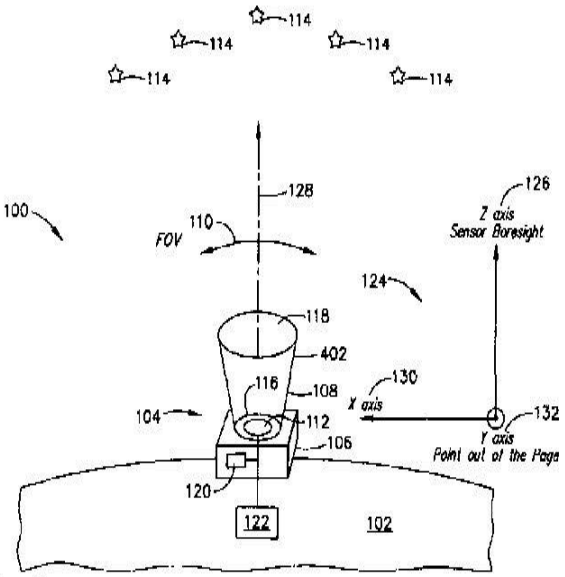

FIG. 1

No. of Pages : 26 No. of Claims : 22

(12) PATENT APPLICATION PUBLICATION
(21) Application No.2501/DELNP/2012 A
(19) INDIA
(22) Date of filing of Application :22/03/2012
(43) Publication Date : 28/08/2015

(54) Title of the invention : ANTICORROSIVE DUST-COLLECTING ENERGY-SAVING CHIMNEY

(51) International classification :F23J 15/02
(31) Priority Document No :200910044441.0
(32) Priority Date :28/09/2009
(33) Name of priority country :China
(86) International Application No :PCT/CN2010/074393
Filing Date :24/06/2010
(87) International Publication No :WO 2011/035619
(61) Patent of Addition to Application Number :NA
Filing Date :NA
(62) Divisional to Application Number :NA
Filing Date :NA

(71)**Name of Applicant :**
1)HUNAN TIANTONG ANTISEPTIC CHIMNEY ENGINEERING CO., LTD.
Address of Applicant :CHANGSHA ZHONGDIAN SOFTWARE PARK HEADQUARTERS BUILDING, THE FIFTH FLOOR, NO. 39 JIANSHAN ROAD, CHANGSHA, HUNAN PROVINCE 410031 (CN) China
(72)**Name of Inventor :**
1)ZHENG, DEMING

(57) Abstract :
An anticorrosive dust-collecting energy-saving chimney includes a chimney barrel. A hearth spiral line with a helix angle of 1080 degrees is arranged on an internal wall of the chimney barrel, and an outlet of an arc flue is arranged at an outside of a bottom of the chimney barrel and in communication with the hearth spiral line. A direction of spiral of the arc flue is the same as a direction of spiral of the hearth spiral line, and the arc flue is smoothly connected to the hearth spiral line.

No. of Pages : 10 No. of Claims : 6

(12) PATENT APPLICATION PUBLICATION
(19) INDIA
(22) Date of filing of Application :23/03/2012
(21) Application No.2574/DELNP/2012 A
(43) Publication Date : 28/08/2015

(54) Title of the invention : ISOOLEFIN POLYMERS AND PROCESS FOR PREPARING THE SAME

(51) International classification :C08F 2/16
(31) Priority Document No :200910092795.2
(32) Priority Date :25/09/2009
(33) Name of priority country :China
(86) International Application No :PCT/CN2010/001462
Filing Date :21/09/2010
(87) International Publication No :WO 2011/035544
(61) Patent of Addition to Application Number :NA
Filing Date :NA
(62) Divisional to Application Number :NA
Filing Date :NA

(71)**Name of Applicant :**
1)CHINA PETROLEUM & CHEMICAL CORPORATION
Address of Applicant :22 CHAOYANGMENG NORTH STREET, CHAOYANG DISTRICT, BEIJING, 100728, P.R. CHINA China
2)BEIJING UNIVERSITY OF CHEMICAL TECHNOLOGY
(72)**Name of Inventor :**
1)WU YIXIAN
2)HUANG QIANG
3)ZHOU HAN
4)JIN RUTING
5)HE PING

(57) Abstract :
The present invention relates to isoolefin polymers and process for preparing the same. The present invention especially discloses a polymerization process for the cationic polymerization of isoolefin monomers in an aqueous reaction medium, and isoolefin polymers obtained by such process. In one embodiment, the present invention relates to a polymerization process for the cationic polymerization of isoolefin monomers in an aqueous reaction medium, and isoolefin polymers obtained therefrom. In another embodiment, the present invention relates to a dispersion polymerization process for the cationic copolymerization of isoolefins with conjugated or non-conjugated diolefins and/or vinyl aromatic compounds, and copolymers obtained therefrom.

No. of Pages : 41 No. of Claims : 8

(12) PATENT APPLICATION PUBLICATION
(21) Application No.2575/DELNP/2012 A
(19) INDIA
(22) Date of filing of Application :23/03/2012
(43) Publication Date : 28/08/2015

(54) Title of the invention : INITIATING SYSTEM FOR CATIONIC POLYMERIZATION AND POLYMERIZATION PROCESS

(51) International classification :C08F 4/12
(31) Priority Document No :200910092795.2
(32) Priority Date :25/09/2009
(33) Name of priority country :China
(86) International Application No :PCT/CN2010/001463
Filing Date :21/09/2010
(87) International Publication No :WO 2011/035545
(61) Patent of Addition to Application Number :NA
Filing Date :NA
(62) Divisional to Application Number :NA
Filing Date :NA

(71)**Name of Applicant :**
1)CHINA PETROLEUM & CHEMICAL CORPORATION
Address of Applicant :22 CHAOYANGMENG NORTH STREET, CHAOYANG DISTRICT, BEIJING, 100728, P.R. CHINA China
2)BEIJING UNIVERSITY OF CHEMICAL TECHNOLOGY
(72)**Name of Inventor :**
1)WU YIXIAN
2)HUANG QIANG
3)ZHOU HAN
4)JIN RUTING
5)HE PING

(57) Abstract :
The present invention discloses an initiating system for cationic polymerization and a polymerization process. The present application relates to an initiating system for cationic polymerization of cationic-polymerizable monomers, and a process for cationic polymerization of cationic-polymerizable monomers by using the initiating system. The present invention particular involves an initiating system for cationic polymerization of cationic-polymerizable monomers in an aqueous reaction medium, and a process for cationic polymerization of cationic-polymerizable monomers by using the initiating system in an aqueous reaction medium.

No. of Pages : 53 No. of Claims : 11

(12) PATENT APPLICATION PUBLICATION
(21) Application No.187/DEL/2015 A
(19) INDIA
(22) Date of filing of Application :21/01/2015
(43) Publication Date : 28/08/2015

(54) Title of the invention : YARN ACCUMULATING DEVICE, YARN WINDING UNIT INCLUDING THE SAME, AND YARN WINDING MACHINE INCLUDING THE SAME

(51) International classification	:d01h, b65h
(31) Priority Document No	:2014-034718
(32) Priority Date	:25/02/2014
(33) Name of priority country	:Japan
(86) International Application No	:NA
Filing Date	:NA
(87) International Publication No	: NA
(61) Patent of Addition to Application Number	:NA
Filing Date	:NA
(62) Divisional to Application Number	:NA
Filing Date	:NA

(71)**Name of Applicant :**
1)Murata Machinery, Ltd.
Address of Applicant :3 Minami Ochiai-cho, Kisshoin, Minami-ku, Kyoto-shi, Kyoto 601-8326, Japan Japan
(72)**Name of Inventor :**
1)UEDA Kenichi

(57) Abstract :
A yarn removal lever 28 includes a contacting 5 ontacting surface 30 arranged movable between a standby position and a yarn removal position and adapted to be capable of making contact with a spun yarn 10. The yarn removal lever 28 is adapted to remove the spun yarn 10 from a yarn hooking member 22 10 by moving the contacting surface 30 to the yarn removal position. The contacting surface 30 includes a first portion 31 and a second portion 32 located downstream of the first portion 31 in a moving direction of the contacting surface 30. Under a state in which the contacting surface 15 30 has been moved to the yarn removal position, at least a portion of the first portion 31 is located downstream of a downstream end 21a of a yarn accumulating roller 21 in a running direction of the spun yarn 10.

No. of Pages : 46 No. of Claims : 7

(12) PATENT APPLICATION PUBLICATION
(19) INDIA
(22) Date of filing of Application :22/03/2012
(21) Application No.2510/DELNP/2012 A
(43) Publication Date : 28/08/2015

(54) Title of the invention : VEGETABLE FLAVOUR

(51) International classification :A23L 1/221
(31) Priority Document No :09172552.3
(32) Priority Date :08/10/2009
(33) Name of priority country :EUROPEAN UNION
(86) International Application No :PCT/EP2010/065006
Filing Date :07/10/2010
(87) International Publication No :WO 2011/042499
(61) Patent of Addition to Application Number :NA
Filing Date :NA
(62) Divisional to Application Number :NA
Filing Date :NA

(71)**Name of Applicant :**
1)DSM IP ASSETS B.V.
Address of Applicant :HET OVERLOON 1, NL-6411 TE HEERLEN, THE NETHERLANDS, Netherlands
(72)**Name of Inventor :**
1)KORTES, JAN GERRIT

(57) Abstract :
The invention relates to a concentrated vegetable flavour wherein the concentration of the vegetable flavour is such that in order to obtain a food with a desired vegetable flavour, the concentrated flavour is added to said food in an amount to arrive at a final concentration of less than 0.1 % w/w of the food. The invention also 10 relates to a process to produce said concentrated vegetable flavour and to a nethod for preparing a food comprising adding the concentrated vegetable flavour.

No. of Pages : 25 No. of Claims : 15

(12) PATENT APPLICATION PUBLICATION
(21) Application No.2511/DELNP/2012 A
(19) INDIA
(22) Date of filing of Application :22/03/2012
(43) Publication Date : 28/08/2015

(54) Title of the invention : STENT

(51) International classification :A61F
(31) Priority Document No :2009-215464
(32) Priority Date :17/09/2009
(33) Name of priority country :Japan
(86) International Application No :PCT/JP2010/066100
Filing Date :16/09/2010
(87) International Publication No :WO 2011/034154
(61) Patent of Addition to Application Number :NA
Filing Date :NA
(62) Divisional to Application Number :NA
Filing Date :NA

(71)**Name of Applicant :**
1)JAPAN STENT TECHNOLOGY CO., LTD.
Address of Applicant :5303 HAGA, KITA-KU, OKAYAMA-SHI, OKAYAMA 701-1221, JAPAN Japan
(72)**Name of Inventor :**
1)FENG, HAI QUAN
2)KISHIMOTO, SUGURU
3)KUBOTA, JUN
4)ASAHARA, MINORU

(57) Abstract :
Provided are stents having a following configuration and improved durability under bending loads and flexibility. The stent comprises a tubular body comprising a plurality of ring units being arranged in the axis direction and bridged by a connecting element and is expandable in the radius direction from its inside. Each of the ring units comprises a plurality of cells connected with each other, each of the cells having a substantially U-shaped form comprising two substantially linear parts and a substantially circular arc part therebetween, and opening toward one end along the axis direction. The ring units comprise first and second ring units alternatively arranged and the oppositely disposed cells of the adjoining first and second ring units are only partly bridged by the connecting elements creating connection between the arc parts of the oppositely disposed cells. The shapes of the cells of the first and second ring units are axisymmetrical of the stent about the connecting element. The curvature radius of the top of the arc constituting the arc part is 1.1 and 1.5 times larger than that of each of the tangent circles formed at the edges of two substantially linear parts of the cell on the circular arc part side.

No. of Pages : 33 No. of Claims : 11

(12) PATENT APPLICATION PUBLICATION
(21) Application No.2583/DELNP/2012 A
(19) INDIA
(22) Date of filing of Application :23/03/2012
(43) Publication Date : 28/08/2015

(54) Title of the invention : PROCESS FOR TRANSITIONING BETWEEN ZIEGLER-NATTA-BASED AND CHROMIUM-BASED CATALYSTS

(51) International classification	:C08F 2/42	(71)**Name of Applicant :**
(31) Priority Document No	:60/637,829	**1)UNIVATION TECHNOLOGIES, LLC**
(32) Priority Date	:21/12/2004	Address of Applicant :5555 SAN FELIPE, SUITE 1950, HOUSTON,
(33) Name of priority country	:U.S.A.	TEXAS 77056, U.S.A. U.S.A.
(86) International Application No	:PCT/US05/046498	(72)**Name of Inventor :**
Filing Date	:21/12/2005	**1)MARK GREGORY GOODE**
(87) International Publication No	:WO 2006/069204	**2)KEVIN JOSEPH CANN**
(61) Patent of Addition to Application Number	:NA	**3)FATHI DAVID HUSSEIN**
Filing Date	:NA	**4)ROBERT LYNN SANTANA**
(62) Divisional to Application Number	:3613/DELNP/2007	**5)DAVID C. SCHUTZ**
Filed on	:15/05/2007	**6)AGAPIOS KYRIACOS AGAPIOU**

(57) Abstract :
A method of transitioning from a first catalyst to a second catalyst in an olefin polymerization reactor, comprising: adding a transition aid agent, wherein said transition aid agent is selected from one of alkoxylated amines, alkoxylated amides, or combinations thereof, wherein said first catalyst comprises at least one Ziegler-Natta catalyst comprising said catalyst, a cocatalyst and optionally a support, and said second catalyst comprises at least one chromium based catalyst.

No. of Pages : 62 No. of Claims : 12

(12) PATENT APPLICATION PUBLICATION
(21) Application No.2512/DELNP/2012 A
(19) INDIA
(22) Date of filing of Application :22/03/2012
(43) Publication Date : 28/08/2015

(54) Title of the invention : RETROFITTED EXCAVATOR TOOTH ATTACHMENT

(51) International classification :F16B
(31) Priority Document No :12/608,803
(32) Priority Date :29/10/2009
(33) Name of priority country :U.S.A.
(86) International Application No :PCT/US10/54499
Filing Date :28/10/2010
(87) International Publication No :WO 2011/059747
(61) Patent of Addition to Application Number :NA
Filing Date :NA
(62) Divisional to Application Number :NA
Filing Date :NA

(71)**Name of Applicant :**
1)BLACK CAT BLADES LTD.
Address of Applicant :5604, 59TH STREET, EDMONTON, ALBERTA, T6B, 3C3, CA Canada
(72)**Name of Inventor :**
1)RUVANG, JOHN A

(57) Abstract :
An excavator implement attachment system can include a tooth having a pocket formed therein, an insert received in a recess formed in an adaptor nose and a threaded fastener which releasably secures the tooth on the nose, the fastener having a helical thread formed thereon which is eccentric relative to a fastener body. A tooth can include a pocket with at least one side wall which has an insert-receiving recess and generally planar insert-engaging interface surfaces formed therein, with one interface surface resisting rotation of the tooth about a longitudinal axis in one direction, and another interface surface resisting rotation of the tooth about the longitudinal axis in an opposite direction. An excavator tooth can include a pocket bounded by opposing side walls, with at least one of the side walls having an insert-receiving recess internally formed thereon, whereby the recess receives an insert installed in an adaptor nose.

No. of Pages : 45 No. of Claims : 18

(12) PATENT APPLICATION PUBLICATION
(19) INDIA
(22) Date of filing of Application :22/03/2012
(21) Application No.2513/DELNP/2012 A
(43) Publication Date : 28/08/2015

(54) Title of the invention : SEMICONDUCTOR DEVICE

(51) International classification :H01L 27/02
(31) Priority Document No :12/551,019
(32) Priority Date :31/08/2009
(33) Name of priority country :U.S.A.
(86) International Application No :PCT/US2010/046254
Filing Date :21/08/2010
(87) International Publication No :WO 2011/025718
(61) Patent of Addition to Application Number :NA
Filing Date :NA
(62) Divisional to Application Number :NA
Filing Date :NA

(71)**Name of Applicant :**
1)ADVANCED MICRO DEVICES, INC.
Address of Applicant :ONE AMD PLACE, P.O. BOX 3453, SUNNYVALE, CALIFORNIA 94088, UNITED STATES OF AMERICA U.S.A.
(72)**Name of Inventor :**
1)CARLSON, ANDREW, E.

(57) Abstract :
A semiconductor device includes a gate on a semiconductor substrate. One side wall of the gate may include at least one protrusion and an opposite side wall of the gate may include at least one depression. A contact is formed through an insulating layer disposed over the gate. The contact at least partially overlaps at least one of the protrusions in the gate. A metal layer is disposed on the insulating layer. The metal layer includes a first structure shifted to a first side of the gate. The first structure at least partially overlaps the contact such that the contact electrically couples the first structure to the gate through the insulating layer.

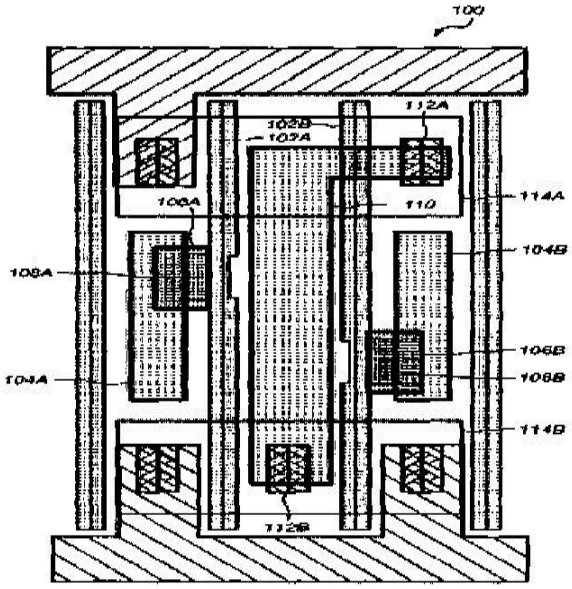

FIG. 2A

No. of Pages : 21 No. of Claims : 25

(12) PATENT APPLICATION PUBLICATION
(21) Application No.2514/DELNP/2012 A
(19) INDIA
(22) Date of filing of Application :22/03/2012
(43) Publication Date : 28/08/2015

(54) Title of the invention : SEED RETAINING AND METHOD OF MANUFACTURING POLYCRYSTALLINE SILICON USING THE SEED RETAINING MEMBER

(51) International classification :C01B 33/035
(31) Priority Document No :2009-202389
(32) Priority Date :02/09/2009
(33) Name of priority country :Japan
(86) International Application No :PCT/JP2010/064986
Filing Date :02/09/2010
(87) International Publication No :WO 2011/027803
(61) Patent of Addition to Application Number :NA
Filing Date :NA
(62) Divisional to Application Number :NA
Filing Date :NA

(71)**Name of Applicant :**
1)TOYO TANSO CO., LTD.
Address of Applicant :7-12, TAKESHIMA 5-CHOME, NISHIYODOGAWA-KU, OSAKA-SHI, OSAKA 5550011, JAPAN Japan
(72)**Name of Inventor :**
1)ISHIZAKI, JUN
2)IZUMIYA, MASAKI

(57) Abstract :
A seed retaining member has a recessed portion for breaking and separating formed at an arbitrary location and thereby allows stress concentration to occur at the recessed portion when applying a breaking load, to enable the seed retaining member to break with a smaller load than conventional. A seed retaining member and method of manufacturing polycrystalline silicon using the seed retaining member are provided, that can prevent a crack from propagating in an unintended location in the seed retaining member by allowing the crack to propagate along the recessed portion, and can reduce a workload in a separation work of the seed retaining member and polycrystalline silicon. A seed retaining member (6) for retaining a lower end portion of a seed (4) serving as a seed rod is made of graphite and disposed at a bottom portion of a furnace for producing polycrystalline silicon by a Siemens method. A groove (16) for breaking and separating is formed in an outer peripheral surface of the seed retaining member (6). The seed retaining member (6) has a columnar base portion (6a) having a first fitting hole (10) for inserting an electrode portion (5), a cylindrical body portion (6b) having a smaller diameter than the base portion (6a), and a conical frustum-shaped tip portion (6c) joined to the body portion (6b) and having a second fitting hole (13) for inserting a lower end portion of the seed (4).

[図3]

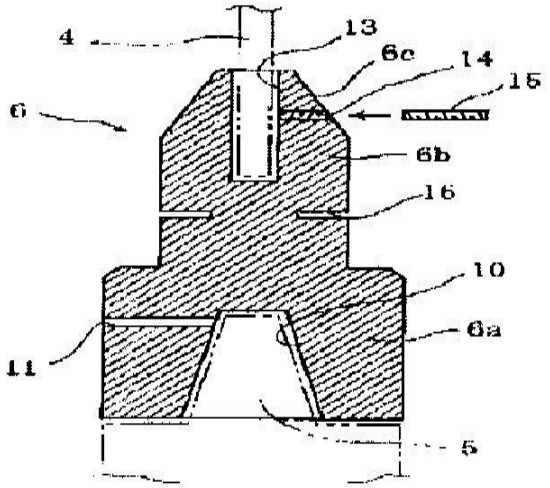

24

No. of Pages : 30 No. of Claims : 9

(12) PATENT APPLICATION PUBLICATION
(21) Application No.2586/DELNP/2012 A
(19) INDIA
(22) Date of filing of Application :23/03/2012
(43) Publication Date : 28/08/2015

(54) Title of the invention : 'THIOL-CONTAINING COMPOUNDS FOR THE REMOVAL OF ELEMENTS FROM CONTAMINATED MILIEU AND METHODS OF USE'

(51) International classification :C07C 323/42
(31) Priority Document No :61/246,282
(32) Priority Date :28/09/2009
(33) Name of priority country :U.S.A.
(86) International Application No :PCT/US2010/050512
Filing Date :28/09/2010
(87) International Publication No :WO 2011/038385
(61) Patent of Addition to Application Number :NA
Filing Date :NA
(62) Divisional to Application Number :NA
Filing Date :NA

(71)**Name of Applicant :**
1)UNIVERSITY OF KENTUCKY RESEARCH FOUNDATION
Address of Applicant :A144 ASTECC BUILDING, UNIVERSITY OF KENTUCKY LEXINGTON, KY 40506-0286, UNITED STATES OF AMERICA U.S.A.
(72)**Name of Inventor :**
1)HALEY, BOYD, E
2)ATWOOD, DAVID, A.

(57) Abstract :
Sulfur-containing ligands and methods of their utilization for binding metals and/or main group elements and removing them from fluids, solids, gases and/or tissues are disclosed. The ligands are of the general structure (A): or structure (B) where R1 comprises benzene, pyridine, pyridin-4-one, naphthalene, anthracene, phenanthrene or alkyl groups, R2 comprises hydrogen, alkyls, aiyls, a carboxyl group, carboxylate esters, organic groups or biological groups, R3 comprises alkyls, aryls, a carboxyl group, carboxylate esters, organic groups or biological groups, X comprises hydrogen, lithium, sodium, potassium, rubidium, cesium, francium, alkyls, aryls, a carboxyl group, carboxylate esters, thiophosphate, N-acetyl cysteine, mercaptoacetic acid, mercaptopropionic acid, thiolsalicylate, organic groups or biological groups, n independently equals 1-10, m = 1 -6, Y comprises hydrogen, polymers, silicas or silica supported substrates, and Z comprises hydrogen, alkyls, aryls, a carboxyl group, carboxylate esters, a hydroxyl group, NH2, HSO3, halogens, a carbonyl group, organic groups, biological groups, polymers, silicas or silica supported substrates.

No. of Pages : 74 No. of Claims : 35

(12) PATENT APPLICATION PUBLICATION
(21) Application No.154/DEL/2015 A
(19) INDIA
(22) Date of filing of Application :16/01/2015
(43) Publication Date : 28/08/2015

(54) Title of the invention : TRAVEL SUPPORT DEVICE, TRAVEL SUPPORT METHOD, AND DRIVE SUPPORT SYSTEM

(51) International classification	:g08g
(31) Priority Document No	:2014-033467
(32) Priority Date	:24/02/2014
(33) Name of priority country	:Japan
(86) International Application No	:NA
Filing Date	:NA
(87) International Publication No	: NA
(61) Patent of Addition to Application Number	:NA
Filing Date	:NA
(62) Divisional to Application Number	:NA
Filing Date	:NA

(71)**Name of Applicant :**
1)TOYOTA JIDOSHA KABUSHIKI KAISHA
Address of Applicant :1, Toyota-cho, Toyota-shi, Aichi-ken 471-8571, Japan Japan
(72)**Name of Inventor :**
1)Yuki OGAWA

(57) Abstract :
A travel support device includes a mode planner. The mode planner selects one of a first mode, in which the state of charge of a battery is not maintained, and a second mode, in which the state of charge of the battery is maintained, based on a road load in each section on a travel route, thereby planning a travel mode. The mode planner selects from the travel route a first priority section, which is a section to be planned by giving priority to the first mode as a travel mode based on information on the travel route. The mode planner replans the travel mode when the vehicle is currently traveling at the first mode and also the remaining charge of the battery is less than the remaining charge of the battery necessary for traveling in the thus selected first priority section.

No. of Pages : 42 No. of Claims : 7

(12) PATENT APPLICATION PUBLICATION
(21) Application No.2521/DELNP/2012 A
(19) INDIA
(22) Date of filing of Application :22/03/2012
(43) Publication Date : 28/08/2015

(54) Title of the invention : METHODS FOR TREATING VISCERAL PAIN BY ADMINISTERING ANTAGONIST ANTIBODIES DIRECTED AGAINST CALCITONIN GENE-RELATED PEPTIDE

(51) International classification	:A61K 39/395	(71)**Name of Applicant :**
(31) Priority Document No	:61/237,901	**1)RINAT NEUROSCIENCE CORPORATION**
(32) Priority Date	:28/08/2009	Address of Applicant :230 EAST GRAND AVENUE, SOUTH SAN FRANCISCO, CALIFORNIA 94080, USA U.S.A.
(33) Name of priority country	:U.S.A.	
(86) International Application No	:PCT/IB2010/053787	(72)**Name of Inventor :**
Filing Date	:23/08/2010	**1)PIOS ARIEL ATES**
(87) International Publication No	:WO 2011/024113	**2)POULSEN KRISTIAN TODD**
(61) Patent of Addition to Application Number	:NA	**3)SHELTON DAVID LOUIS**
Filing Date	:NA	**4)ZELLER JOERG**
(62) Divisional to Application Number	:NA	
Filing Date	:NA	

(57) Abstract :
The invention features methods for preventing or treating visceral pain pain associated with functional bowel disorder, inflammatory bowel disease and interstitial cystitis, by administering an anti-CGRP antagonist antibody.

No. of Pages : 73 No. of Claims : 18

(12) PATENT APPLICATION PUBLICATION
(19) INDIA
(22) Date of filing of Application :22/03/2012

(21) Application No.2522/DELNP/2012 A
(43) Publication Date : 28/08/2015

(54) Title of the invention : TIMING CONTROL

(51) International classification :H04W 56/00
(31) Priority Document No :PCT/EP2009/062797
(32) Priority Date :02/10/2009
(33) Name of priority country :PCT
(86) International Application No :PCT/EP2009/062797
Filing Date :02/10/2009
(87) International Publication No :WO 2011038772
(61) Patent of Addition to Application Number :NA
Filing Date :NA
(62) Divisional to Application Number :NA
Filing Date :NA

(71)**Name of Applicant :**
1)NOKIA SIEMENS NETWORKS OY
Address of Applicant :KARAPORTTI 3, FI-02610 ESPOO, FINLAND, Finland
(72)**Name of Inventor :**
1)SEBIRE, BENOIST PIERRE

(57) Abstract :
A method comprising: at a first device configured for making one or more transmissions to a second device in one or more of a plurality of frequency blocks and configured to receive respective timing commands for each of said plurality of frequency blocks: determining that the most recently received timing commands for each of the plurality of frequency blocks are all valid, when a predetermined period of time has not expired since receiving the most recent timing command for any one of said plurality of frequency blocks.

FIG 6

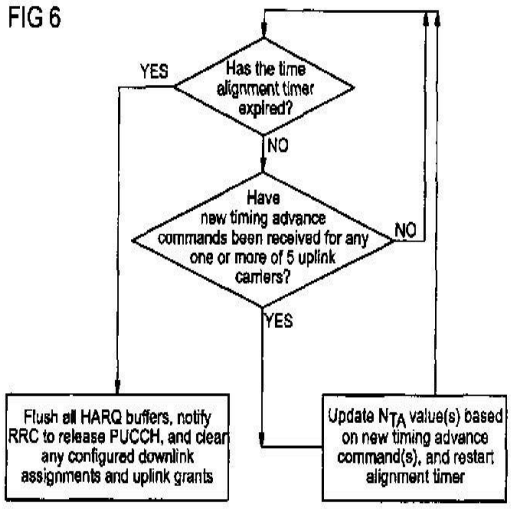

No. of Pages : 23 No. of Claims : 15

(12) PATENT APPLICATION PUBLICATION
(19) INDIA
(22) Date of filing of Application :23/03/2012

(21) Application No.2592/DELNP/2012 A
(43) Publication Date : 28/08/2015

(54) Title of the invention : FULLY AUTOMATED PARKING SYSTEM

(51) International classification :G06G 7/76
(31) Priority Document No :61/275,500
(32) Priority Date :31/08/2009
(33) Name of priority country :U.S.A.
(86) International Application No :PCT/IL2010/000685
Filing Date :23/08/2010
(87) International Publication No :WO 2011/024161
(61) Patent of Addition to Application Number :NA
Filing Date :NA
(62) Divisional to Application Number :NA
Filing Date :NA

(71)**Name of Applicant :**
1)PARX LTD.
Address of Applicant :Z.H.R INDUSTRIAL ZONE, P.O.B 32, ROSH PINA 12000, ISRAEL Israel
(72)**Name of Inventor :**
1)GANOT, ZVI

(57) Abstract :
The present invention relates to a parking system, which comprises a plurality of Curb Devices, each Curb Device having its own unique Curb Device ID and is installed close to a corresponding parking space, the Curb device is also provided with a sensor for sensing a physical positioning of a car within the respective parking space, a plurality of Car Devices, each Car Device is provided with its own unique Car Device ID, and is positioned at a corresponding car at a location, and a Host which is provided with Users Data and Parking Spaces Data, for remotely managing, billing, enforcing and controlling on line and in real time parking of vehicles at each of said parking spaces The invention also relates to a parking enforcement by the system of the present invention, providing to the enforcement inspector the exact parking location where a proven violation has occurred

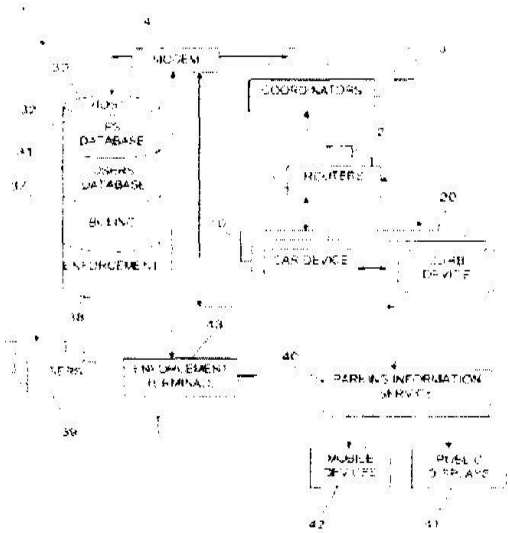

No. of Pages : 50 No. of Claims : 20

(12) PATENT APPLICATION PUBLICATION
(19) INDIA
(22) Date of filing of Application :23/03/2012
(21) Application No.2593/DELNP/2012 A
(43) Publication Date : 28/08/2015

(54) Title of the invention : PROCESS AND APPARTUS FOR THE ANNIHILATION OF HARMFUL WASTE CONTAINING POLYCHLORINATED HYDROCARBONS

(51) International classification :A62D 3/34
(31) Priority Document No :P0900602 (HU)
(32) Priority Date :24/09/2009
(33) Name of priority country :Hungary
(86) International Application No :PCT/IB2010/054276
Filing Date :22/09/2010
(87) International Publication No :WO 2011/036629
(61) Patent of Addition to Application Number :NA
Filing Date :NA
(62) Divisional to Application Number :NA
Filing Date :NA

(71)**Name of Applicant :**
1)MAGYAR TUDOMANYOS AKADEMIA KEMIAI KUTATOKOZPONT
Address of Applicant :PUSZTASZERI UT 59-67, H-1025 BUDAPEST (HU) Hungary
2)AREND KERESKEDELMI ES SZOLGALTATO KFT
3)PROCALOR KORNYEZETVEDELMI ES ENERGETIKAI KUTATO-FEJLESZTO, ES SZOLGALTATO KFT
4)SIRKO, IMRE
(72)**Name of Inventor :**
1)SIRKO, IMRE
2)MINK, GYORGY
3)SZABO PETER
4)TOROK ERNO
5)FEJES, SZABOLCS
6)LENYEL, ISTVAN

(57) Abstract :
The present invention relates to a process consists of the hydrolytic decomposition of the polychlorinated hydrocarbons: of polychlorinated aliphatics and especially of polychlorinated aromatics and oxidizing the chlorine-free product at elevated temperature in the presence of a carrier gas in one unit characterized by a hot and a transitional temperature zone, whereby the calcium chloride and the exiting gas mixture are removed continuously and the excess heat of the highly exothermic process is utilized. The present invention also relates to an apparatus for the process which is carried out in an Apparatus of Figure 1.

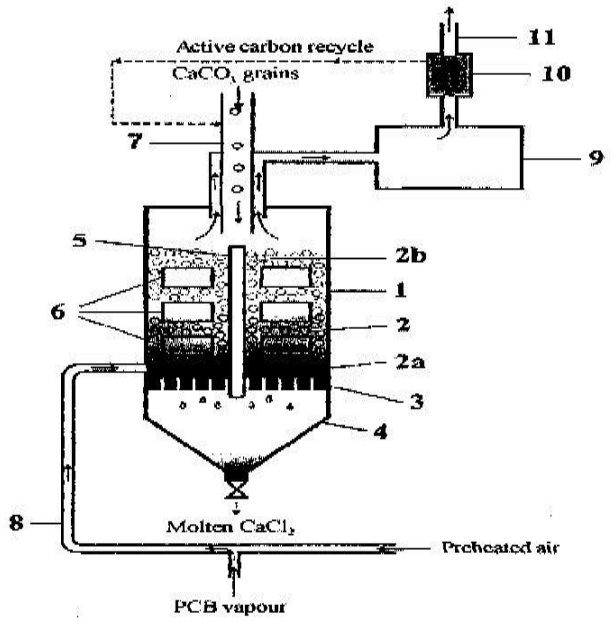

No. of Pages : 22 No. of Claims : 9

(12) PATENT APPLICATION PUBLICATION
(21) Application No.2515/DELNP/2012 A
(19) INDIA
(22) Date of filing of Application :22/03/2012
(43) Publication Date : 28/08/2015

(54) Title of the invention : BARRIER APPARATUS FOR SUPPORTING A FLEXIBLE BANNER

(51) International classification :E01F 13/02
(31) Priority Document No :0914812.3
(32) Priority Date :25/08/2009
(33) Name of priority country :U.K.
(86) International Application No :PCT/GB2010/051409
Filing Date :25/08/2010
(87) International Publication No :WO 2011/023998
(61) Patent of Addition to Application Number :NA
Filing Date :NA
(62) Divisional to Application Number :NA
Filing Date :NA

(71)**Name of Applicant :**
1)ROLLERSIGNS LIMITED
Address of Applicant :OMC CHAMBERS, WICKHAMS CAY 1, ROAD TOWN, TORTOLA, BRITISH VIRGIN ISLANDS, VIRGIN ISLANDS (BRITISH) U.K.
(72)**Name of Inventor :**
1)LEWIS, ROBERT LEWIS

(57) Abstract :
Banner apparatus (10) for supporting a flexible banner (16), the apparatus comprising a spindle and an attachment element attached to the spindle and arranged to enable the flexible banner to be releasably coupled to the spindle.

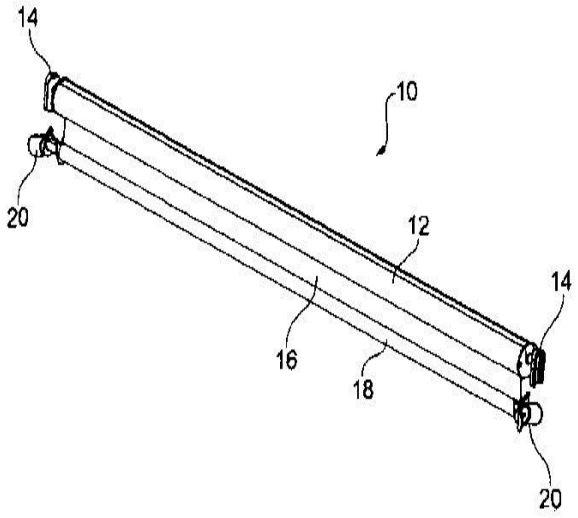

FIG. 1

No. of Pages : 24 No. of Claims : 29

(12) PATENT APPLICATION PUBLICATION
(19) INDIA
(22) Date of filing of Application :22/03/2012

(21) Application No.2516/DELNP/2012 A
(43) Publication Date : 28/08/2015

(54) Title of the invention : VISIBLE/NIR PHOTODETECTORS

(51) International classification :C07D 487/22
(31) Priority Document No :61/275,156
(32) Priority Date :26/08/2009
(33) Name of priority country :U.S.A.
(86) International Application No :PCT/US2010/046816
Filing Date :26/08/2010
(87) International Publication No :WO 2011/028610
(61) Patent of Addition to Application Number :NA
Filing Date :NA
(62) Divisional to Application Number :NA
Filing Date :NA

(71)**Name of Applicant :**
1)THE REGENTS OF THE UNIVERSITY OF MICHIGAN
Address of Applicant :1214 SOUTH UNIVERSITY AVENUE, 2ND FLOOR, ANN ARBOR, MICHIGAN 48104-2592 UNITED STATES OF AMERICA U.S.A.
2)THE UNIVERSITY OF SOUTHERN CALIFORNIA
(72)**Name of Inventor :**
1)FORREST, STEPHEN R.
2)ZIMMERMAN, GERAMY D.
3)THOMPSON, MARK E.
4)DIEV, VIACHESLAV
5)HANSON, KENNETH

(57) Abstract :
Porphyrin compounds are provided. The compounds may further comprise a fused polycyclic aromatic hydrocarbon or a fused heterocyclic aromatic. Fused polycyclic aromatic hydrocarbon s and fused heterocyclic aromatics may extend and broaden absorption, and modify the solubility, crystallinity, and film-forming properties of the porphyrin compounds. Additionally, devices comprising porphyrin compounds are also provided. The porphyrin compounds may be used in a donor/acceptor configuration with compounds, such as C60.

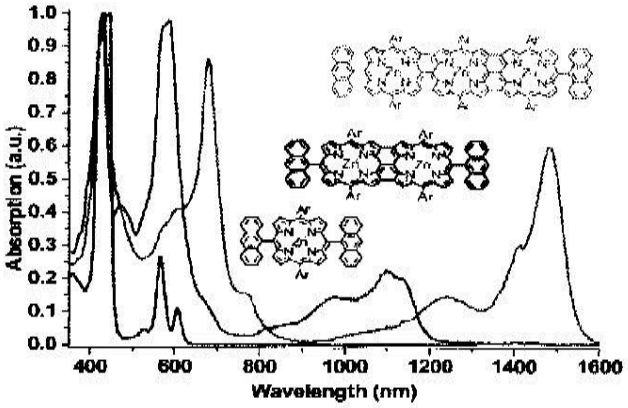

FIGURE 1

No. of Pages : 122 No. of Claims : 30

(12) PATENT APPLICATION PUBLICATION
(21) Application No.2517/DELNP/2012 A
(19) INDIA
(22) Date of filing of Application :22/03/2012
(43) Publication Date : 28/08/2015

(54) Title of the invention : SYSTEMS AND METHODS FOR ASSEMBLING AN EVAPORATIVE COOLER

(51) International classification :B01F 3/04
(31) Priority Document No :PCT/IB2009/053969
(32) Priority Date :10/09/2009
(33) Name of priority country :PCT
(86) International Application No :PCT/IB2009/053969
Filing Date :10/09/2009
(87) International Publication No :WO 2011/030181
(61) Patent of Addition to Application Number :NA
Filing Date :NA
(62) Divisional to Application Number :NA
Filing Date :NA

(71)**Name of Applicant :**
1)GENERAL ELECTRIC COMPANY
Address of Applicant :1 RIVER ROAD, SCHENECTADY, NEW YORK 12345, USA U.S.A.
(72)**Name of Inventor :**
1)NIKOLIN, PRZEMYSLAW KRZYSZTOF
2)EYERS, WILLIAM KEITH ALBERT
3)SMITH, PETER JOHN DUNCAN

(57) Abstract :
A method of assembling an evaporative cooler for use with a gas turbine engine system. The method includes coupling a drain pan to a support frame, wherein the drain pan includes a front wall and a back wall. A media support assembly is coupled to the drain pan to form the evaporative cooler. The media support assembly includes a media support wall and a rear flange. The media support wall extends substantially perpendicularly from the drain pan front wall and defines a continuous drainage chamber between the drain pan front wall and the back wall.

No. of Pages : 24 No. of Claims : 20

(12) PATENT APPLICATION PUBLICATION
(21) Application No.2588/DELNP/2012 A
(19) INDIA
(22) Date of filing of Application :23/03/2012
(43) Publication Date : 28/08/2015

(54) Title of the invention : NETWORK DISTRIBUTED QUANTUM RANDOM NUMBER GENERATION

(51) International classification :G06F 7/58
(31) Priority Document No :0915000.4
(32) Priority Date :27/08/2009
(33) Name of priority country :U.K.
(86) International Application No :PCT/EP2010/061320
Filing Date :03/08/2010
(87) International Publication No :WO 2011/023501
(61) Patent of Addition to Application Number :NA
Filing Date :NA
(62) Divisional to Application Number :NA
Filing Date :NA

(71)**Name of Applicant :**
1)UNIVERSITE LIBRE DE BRUXELLES
Address of Applicant :AVENUE FRANKLIN ROOSEVELT, 50-1050 BRUSSELS, BELGIUM Belgium
(72)**Name of Inventor :**
1)CERF, NICOLAS
2)LAMOUREUX, LOUIS-PHILIPPE
3)NISET, JULIEN

(57) Abstract :
A quantum random number generation system comprising of a source of light output as a plurality of coherent states such that each state has an indeterminate number of photons, a photodetector arranged to receive the light output from the light source and to generate a photocurrent dependent on the number of photons in each coherent state and processing circuitry connected to receive the photocurrent and arranged to convert it to generate a sequence of random numbers.

No. of Pages : 26 No. of Claims : 16

(12) PATENT APPLICATION PUBLICATION
(19) INDIA
(22) Date of filing of Application :23/03/2012
(21) Application No.2589/DELNP/2012 A
(43) Publication Date : 28/08/2015

(54) Title of the invention : COMPOSITIONS THAT INDUCE T CELL HELP

(51) International classification :C07K 1/00
(31) Priority Document No :61/237,147
(32) Priority Date :26/08/2009
(33) Name of priority country :U.S.A.
(86) International Application No :PCT/US2010/002330
Filing Date :24/08/2010
(87) International Publication No :WO 2011/031298
(61) Patent of Addition to Application Number :NA
Filing Date :NA
(62) Divisional to Application Number :NA
Filing Date :NA

(71)**Name of Applicant :**
1)SELECTA BIOSCIENCES, INC.
Address of Applicant :480 ARSENAL STREET, BUILDING ONE, WATERTOWN, MASSACHUSETTS 02472, UNITED STATES OF AMERICA U.S.A.
(72)**Name of Inventor :**
1)FRASER, CHRISTOPHER
2)LIPFORD, GRAYSON B.
3)LAMOTHE, ROBERT
4)ALTREUTER, DAVID H.

(57) Abstract :
The present invention relates, at least in part, to compositions, and related methods, comprising MHC II binding peptides. In one embodiment, the MHC II binding peptides comprise a peptide having at least 70% identity to a natural HLA-DP binding peptide, HLA-DQ binding peptide, or HLA-DR binding peptide.

No. of Pages : 153 No. of Claims : 150

(12) PATENT APPLICATION PUBLICATION
(19) INDIA
(22) Date of filing of Application :03/04/2015
(21) Application No.2745/DELNP/2015 A
(43) Publication Date : 28/08/2015

(54) Title of the invention : INTAGLIO PRINTING PRESS AND METHOD OF MONITORING OPERATION OF THE SAME

(51) International classification :B41F33/00,B41F33/02,B41F13/24
(31) Priority Document No :12189131.1
(32) Priority Date :18/10/2012
(33) Name of priority country :EPO
(86) International Application No :PCT/IB2013/059448
Filing Date :18/10/2013
(87) International Publication No :WO 2014/060997
(61) Patent of Addition to Application Number :NA
Filing Date :NA
(62) Divisional to Application Number :NA
Filing Date :NA

(71)**Name of Applicant :**
1)KBA- NOTASYS SA
Address of Applicant :PO Box 347, 55 ,Avenue du Grey, CH -1000 Lausanne 22 Switzerland
(72)**Name of Inventor :**
1)SCHWITZKY, Volkmar, Rolf;
2)SCHARKUS, Volker;

(57) Abstract :
There is described an intaglio printing press comprising a plate cylinder (8) carrying one or more intaglio printing plates (8c) and an impression cylinder (7) cooperating with the plate cylinder (8), a printing nip being formed between the plate cylinder (8) and the impression cylinder (7). The plate cylinder (8) and the impression cylinder (7) each comprise one or more cylinder pits (8a, 7a) and a corresponding number of cylinder segments (8b , 7b), the plate cylinder (8) and the impression cylinder (7) being in rolling contact with one another during printing operations along their respective cylinder segments (8a , 7b) when no cylinder pits (8a , 7a) are present at the printing nip. The intaglio printing press further comprises a monitoring system (150) designed to monitor a rolling condition of the impression cylinder (7) with respect to the plate cylinder (8) and to provide an indication as to whether or not the rolling condition corresponds to a desired rolling condition the desired rolling condition being a rolling condition corresponding to true rolling of the impression cylinder (7) with respect to the plate cylinder (8) where no slippage occurs between a circumferential surface of the impression cylinder (7) and a circumferential surface of the plate cylinder (8). Also described is a method of monitoring operation of an intaglio printing press.

No. of Pages : 41 No. of Claims : 15

(12) PATENT APPLICATION PUBLICATION
(21) Application No.1342/DEL/2012 A
(19) INDIA
(22) Date of filing of Application :02/05/2012
(43) Publication Date : 28/08/2015

(54) Title of the invention : MICROBICIDES FROM PLANT EXTRACTS FOR PROTECTION AGAINST HSV 2 INFECTION

(51) International classification :C12N
(31) Priority Document No :NA
(32) Priority Date :NA
(33) Name of priority country :NA
(86) International Application No :NA
Filing Date :NA
(87) International Publication No :NA
(61) Patent of Addition to Application Number :NA
Filing Date :NA
(62) Divisional to Application Number :NA
Filing Date :NA

(71)**Name of Applicant :**
1)COUNCIL OF SCIENTIFIC & INDUSTRIAL RESEARCH
Address of Applicant :ANUSANDHAN BHAWAN, RAFI MARG, NEW DELHI-110001, INDIA. Delhi India
(72)**Name of Inventor :**
1)SWATI PRAMOD JOSHI
2)SMITA SHRIKANT KULKARNI

(57) Abstract :
Disclosed herein is a microbicidal composition comprising combination of selected extracts of aerial parts of plants such as Polygonum glabrum, Rhus mysorensis, Terminalia paniculata, Cuscuta reflexa, Terminalia crenulata, Scutia myrtina, and Cassytha filiformis along with pharmaceutically acceptable excipients or carriers, for the treatment of sexually transmitted diseases, particulary HSV-2 type infections.

No. of Pages : 29 No. of Claims : 10

(12) PATENT APPLICATION PUBLICATION
(19) INDIA
(22) Date of filing of Application :22/03/2012
(21) Application No.2519/DELNP/2012 A
(43) Publication Date : 28/08/2015

(54) Title of the invention : USE OF SURFACE-TREATED CARBON BLACKS IN AN ELASTOMER TO REDUCE COMPOUND HYSTERESIS AND TIRE ROLLING RESISTANCE AND IMPROVE WET TRACTION

(51) International classification :C08L 53/02
(31) Priority Document No :61/237,593
(32) Priority Date :27/08/2009
(33) Name of priority country :U.S.A.
(86) International Application No :PCT/US2010/043384
Filing Date :27/07/2010
(87) International Publication No :WO 2011/028337
(61) Patent of Addition to Application Number :NA
Filing Date :NA
(62) Divisional to Application Number :NA
Filing Date :NA

(71)**Name of Applicant :**
1)COLUMBIAN CHEMICALS COMPANY
Address of Applicant :1800 WEST OAK COMMONS COURT, MARIETTA, GEORGIA 30062, USA U.S.A.
2)LANXESS DEUTSCHLAND GMBH
(72)**Name of Inventor :**
1)HERD CHARLES
2)EDWARDS CHARLES
3)CURTIS JOHN
4)CROSSLEY STEVE
5)SCHOMBERG K. CORY
6)GROSS THOMAS
7)STEINHAUSER NORBERT
8)KLOPPENBERG HEIKE
9)HARDY DAVID
10)LUCASSEN ALEX

(57) Abstract :
A compound composition comprised of a surface-treated-carbon-black and a functionalized polymer with functionalization along the polymer chain, with the polymer representing a solution SBR including, but not limited to blends of the SBR (PBR4003) with BR, NR and EPDM, and the SBR polymer functionalization composed of polar, oxygen-containing functional groups reduced compound hysteresis and rolling resistance, improved wet traction with excellent abrasion resistance as would be used in passenger, truck and racing tires.

Table 1:
Solution SBR Test Recipe

Ingredient	phr
First Pass*	
Variable 1: SSBR	125
Variable 2: Filler	84
Variable 3: Coupling	0 or 6
Sundex 790	6
Zinc Oxide	2.5
Second Pass*	
Stearic Acid	1.0
Santoflex 6PPD	2.0
Microwax, SP-89	1.0
Finish	
Sulfur	1.4
CBS	1.7
DPG	0.2, 2.0

No. of Pages : 42 No. of Claims : 19

(12) PATENT APPLICATION PUBLICATION
(21) Application No.2595/DELNP/2012 A
(19) INDIA
(22) Date of filing of Application :23/03/2012
(43) Publication Date : 28/08/2015

(54) Title of the invention : CONVEYORS BELTS AND MODULES WITH ACTUATED ROLLERS

(51) International classification :B23B
(31) Priority Document No :12/557,092
(32) Priority Date :10/09/2009
(33) Name of priority country :U.S.A.
(86) International Application No :PCT/US2010/048084
Filing Date :08/09/2010
(87) International Publication No : NA
(61) Patent of Addition to Application Number :NA
Filing Date :NA
(62) Divisional to Application Number :NA
Filing Date :NA

(71)**Name of Applicant :**
1)LAITRAM L.L.C.
Address of Applicant :Legal Department 200 Laitram Lane Harahan Louisiana 70123 United States of America. U.S.A.
(72)**Name of Inventor :**
1)Matthew L. FOURNEY

(57) Abstract :
A conveyor a conveyor belt used in the conveyor and a belt module (10) used to construct the conveyor belt in which the module (10) includes belt rollers (24) that extend outward of a conveyor surface (30) of the modules to support conveyed articles. The belt rollers (24) are mounted in cavities (22) in the modules that open onto the conveying surface (30) and a recessed surface recessed inward of an outermost surface (31) opposite the conveying surface (30) through the thickness of the modules. Bearing surfaces such as the peripheries of conveyor rollers (42) underlying the conveyor

No. of Pages : 13 No. of Claims : 13

(12) PATENT APPLICATION PUBLICATION
(21) Application No.2596/DELNP/2012 A
(19) INDIA
(22) Date of filing of Application :23/03/2012
(43) Publication Date : 28/08/2015

(54) Title of the invention : CONDENSED QUINOLINES AS PROTEIN KINASE MODULATORS

(51) International classification :A01K
(31) Priority Document No :61/237,227
(32) Priority Date :26/08/2009
(33) Name of priority country :U.S.A.
(86) International Application No :PCT/US2010/046760
Filing Date :26/08/2010
(87) International Publication No : NA
(61) Patent of Addition to Application Number :NA
Filing Date :NA
(62) Divisional to Application Number :NA
Filing Date :NA

(71)**Name of Applicant :**
1)CYLENE PHARMACEUTICALS INC.
Address of Applicant :5820 Nancy Ridge Drive Suite 200 San Diego California 92121 U.S.A.
(72)**Name of Inventor :**
1)PIERRE Fabirce
2)HADDACH Mustapha
3)REGAN Collin F.
4)RYCKMAN David M.

(57) Abstract :
CONDENSED QUINOLINES AS PROTEIN KINASE MODULATORS The invention relates in part to molecules having certain biological activities that include but are not limited to inhibiting cell proliferation modulating protein kinase activity and modulating polymerase activity. Molecules of the invention can modulate protein kinase CK2 activity Pim kinase activity and/or FMS-like tyrosine kinase (Flt) activity. The invention also relates in part to methods for using such molecules.

No. of Pages : 147 No. of Claims : 51

(12) PATENT APPLICATION PUBLICATION
(21) Application No.2750/DELNP/2015 A
(19) INDIA
(22) Date of filing of Application :03/04/2015
(43) Publication Date : 28/08/2015

(54) Title of the invention : A FEDERATED DATABASE SYSTEM

(51) International classification :G06F17/30
(31) Priority Document No :NA
(32) Priority Date :NA
(33) Name of priority country :NA
(86) International Application No :PCT/EP2012/070819
Filing Date :19/10/2012
(87) International Publication No :WO 2014/060050
(61) Patent of Addition to Application Number :NA
Filing Date :NA
(62) Divisional to Application Number :NA
Filing Date :NA

(71)**Name of Applicant :**
1)TELEFONAKTIEBOLAGET L M ERICSSON (PUBL)
Address of Applicant :S- 164 83 Stockholm Sweden
(72)**Name of Inventor :**
1)PRASANNA KUMAR, Manoj;
2)SHIVASHANKAR, Subramanian;
3)ZAHOOR, Jawad Mohamed;

(57) Abstract :
The invention is directed towards a query handling device (20) in a federated database system (10) and a method, computer program and computer program product for handling queries in the federated database system. The query handling device (20) receives database queries (Q1 , Q2, Q3 , Q4) directed towards a group of databases (22 , 24 , 26 , 28) from several applications (Al , A2 , A3 , A4) and filters the queries based on common query rules such as common query syntax, investigates the queries (Q1 , Q2, Q3, Q4) that have passed the filtering, where the investigation comprises prioritising between at least some queries according to a query prioritisation scheme ,and sends the investigated queries to the databases , where queries having been prioritised are sent according to the query prioritisation scheme.

No. of Pages : 39 No. of Claims : 14

(12) PATENT APPLICATION PUBLICATION
(21) Application No.2302/DELNP/2015 A
(19) INDIA
(22) Date of filing of Application :20/03/2015
(43) Publication Date : 28/08/2015

(54) Title of the invention : INTERACTIVE SYSTEM ,CONTROL METHOD FOR INTERACTIVE SYSTEM, AND PROJECTOR

(51) International classification :G06F3/0354,H04B10/564,G08C23/04
(31) Priority Document No :2012204045
(32) Priority Date :18/09/2012
(33) Name of priority country :Japan
(86) International Application No :PCT/JP2013/005456
Filing Date :13/09/2013
(87) International Publication No :WO 2014/045560
(61) Patent of Addition to Application Number :NA
Filing Date :NA
(62) Divisional to Application Number :NA
Filing Date :NA

(71)**Name of Applicant :**
1)SEIKO EPSON CORPORATION
Address of Applicant :4- 1, Nishi- shinjuku 2 -chome, Shinjuku -ku, Tokyo 1630811 Japan
(72)**Name of Inventor :**
1)KOBAYASHI, Yasuyuki;
2)KOYAMA, Takaaki;
3)OTSUKI, Nobuyuki;
4)HORIGUCHI, Masahiro;
5)KARASAWA, Yukihiro;

(57) Abstract :
An interactive system includes a transmitter (light- emitting pen) configured to transmit an optical signal and a projector. The projector includes a signal- intensity setting unit in which intensity information of a synchronization signal is set, a signal- intensity control unit (light- emission control unit) configured to control the intensity of the synchronization signal, on the basis of the setting of the signal- intensity setting unit a synchronization signal transmitting unit (infrared light emitting unit) configured to transmit the synchronization signal and an image pickup unit configured to pick up an image of the optical- signal transmitted from the transmitter. The transmitter includes a receiving unit (pen reception unit) configured to receive the synchronization signal and an optical- signal transmitting unit (pen control unit and a light- emitting diode) configured to transmit the optical signal in synchronization with the synchronization signal received by the receiving unit.

No. of Pages : 45 No. of Claims : 7

(12) PATENT APPLICATION PUBLICATION
(21) Application No.2303/DELNP/2015 A
(19) INDIA
(22) Date of filing of Application :20/03/2015
(43) Publication Date : 28/08/2015

(54) Title of the invention : WIRELESS COMMUNICATION SYSTEM , WIRELESS STATIONS, WIRELESS TERMINAL, COMMUNICATION CONTROL METHOD , AND COMPUTER- READABLE MEDIUM

(51) International classification :H04W72/04,H04W84/10,H04W92/20
(31) Priority Document No :2012223177
(32) Priority Date :05/10/2012
(33) Name of priority country :Japan
(86) International Application No :PCT/JP2013/003739
Filing Date :14/06/2013
(87) International Publication No :WO 2014/054201
(61) Patent of Addition to Application Number :NA
Filing Date :NA
(62) Divisional to Application Number :NA
Filing Date :NA

(71)**Name of Applicant :**
1)NEC CORPORATION
Address of Applicant :7- 1 ,Shiba 5- chome ,Minato -ku, Tokyo 1088001 Japan
(72)**Name of Inventor :**
1)Hisashi FUTAKI
2)Hiroaki AMINAKA

(57) Abstract :
A first wireless station (1) requests or instructs a second wireless station (2) to prepare to communicate with a wireless terminal in a second cell (20) while a first wireless connection with the wireless terminal (3) in a first cell (10) is being established. In addition , the first wireless station (1) instructs the wireless terminal (3) or the second wireless station (2) to establish a second wireless connection with the wireless terminal (3) in the second cell (20), wherein the wireless connection of the wireless terminal (3) in the first cell (10) is being maintained. A single wireless terminal is thus able to establish a wireless connection in a cell having a plurality of wireless stations in order to achieve carrier aggregation of a plurality of cells operated by different wireless stations , for example.

No. of Pages : 64 No. of Claims : 45

(12) PATENT APPLICATION PUBLICATION
(21) Application No.2526/DELNP/2012 A
(19) INDIA
(22) Date of filing of Application :22/03/2012
(43) Publication Date : 28/08/2015

(54) Title of the invention : NETWORK MONITORING AND ANALYSIS TOOL

(51) International classification :H04L 12/26
(31) Priority Document No :200906354-6
(32) Priority Date :24/09/2009
(33) Name of priority country :Singapore
(86) International Application No :PCT/SG2010/000330
Filing Date :07/09/2010
(87) International Publication No :WO 2011/037536
(61) Patent of Addition to Application Number :NA
Filing Date :NA
(62) Divisional to Application Number :NA
Filing Date :NA

(71)**Name of Applicant :**
1)3RD BRAND PTE. LTD. (COMPANY REGISTRATION NO. 200719143G)
Address of Applicant :100 BEACH ROAD, #25-06 SHAW TOWERS, SINGAPORE 189702 Singapore
(72)**Name of Inventor :**
1)UNDER WOOD, JOHN ANTHONY
2)KEYS, CHRISTOPHER EDWARD
3)LEINONEN, RAINER
4)KERO, MARKKU

(57) Abstract :
A method for determining the performance of a communications network said method comprising the steps of transmitting a message from a mobile device to at least one server, each server within the at least one servers being configured to direct the message back to the mobile device; receiving at the mobile device the messages returned by each of the at least one server; calculating a time differential between transmission of the message by said mobile device and receipt of the messages, returned by each server of the at least one server, by said mobile device; and forwarding the calculated time differential to a primary server selected from the at least one server for storage is disclosed. FIG. 2

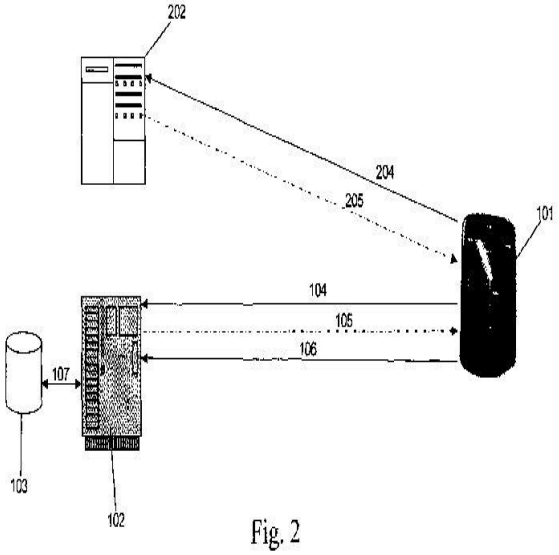

Fig. 2

No. of Pages : 21 No. of Claims : 19

(12) PATENT APPLICATION PUBLICATION
(21) Application No.2527/DELNP/2012 A
(19) INDIA
(22) Date of filing of Application :23/03/2012
(43) Publication Date : 28/08/2015

(54) Title of the invention : A PROCESS FOR THE CARBONYLATION OF ETHYLENICALLY UNSATURATED COMPOUND •

(51) International classification :C09C
(31) Priority Document No :0403592.9
(32) Priority Date :17/02/2005
(33) Name of priority country :U.K.
(86) International Application No :PCT/GB2005/000569
Filing Date :17/02/2005
(87) International Publication No : NA
(61) Patent of Addition to Application Number :NA
Filing Date :NA
(62) Divisional to Application Number :4679/DELNP/2006
Filed on :14/08/2006

(71)**Name of Applicant :**
1)LUCITE INTERNATIONAL UK LIMITED
Address of Applicant :Queens Gate 15-17 Queens Terrace Southampton Hampshire SO14 3BP United Kingdom U.K.
(72)**Name of Inventor :**
1)EASTHAM Graham
2)TINDALE Neil

(57) Abstract :
A process for the carbonylation of an ethylenically unsaturated compound comprising contacting ethene with carbon monoxide and a hydroxyl group containing compound in the presence of a catalyst system capable of catalysing the carbonylation of ethene which system is obtainable by combining.

No. of Pages : 151 No. of Claims : 18

(12) PATENT APPLICATION PUBLICATION
(21) Application No.2752/DELNP/2015 A
(19) INDIA
(22) Date of filing of Application :03/04/2015
(43) Publication Date : 28/08/2015

(54) Title of the invention : METHOD AND DEVICE FOR MANAGING ELECTRICAL ENERGY STORAGE ASSEMBLIES FOR ELECTRICAL POWER SUPPLY OF AN ELECTRIC MOTOR VEHICLE

(51) International classification :B60L11/18,B60L3/04,B60L3/00
(31) Priority Document No :1258461
(32) Priority Date :10/09/2012
(33) Name of priority country :France
(86) International Application No :PCT/EP2013/068654
Filing Date :10/09/2013
(87) International Publication No :WO 2014/037572
(61) Patent of Addition to Application Number :NA
Filing Date :NA
(62) Divisional to Application Number :NA
Filing Date :NA

(71)**Name of Applicant :**
1)BLUE SOLUTIONS
Address of Applicant :Odet, F- 29500 Ergue Gaberic France
(72)**Name of Inventor :**
1)JESTIN, Jean-Jacques;
2)COLIN, Jacques;

(57) Abstract :
The invention relates to a method of controlling the operation of the electrical power supply to an electric motor vehicle comprising at least two energy storage modules connected in parallel, said modules being able to provide the motor with a delivered electrical power lying between a predetermined minimum power and a predetermined maximum power, noteworthy in that the method comprises the following steps: - detection (100 , 110) of an operating anomaly of at least one defective module , - reduction (120 , 130) of the maximum power that can be provided by the modules , - electrical disconnection (140) of each defective module, the disconnection step being implemented after the reduction of the maximum power.

No. of Pages : 34 No. of Claims : 15

(12) PATENT APPLICATION PUBLICATION
(19) INDIA
(22) Date of filing of Application :20/03/2015

(21) Application No.2307/DELNP/2015 A
(43) Publication Date : 28/08/2015

(54) Title of the invention : METHOD AND APPARATUS FOR RF PERFORMANCE METRIC ESTIMATION

(51) International classification	:H04B17/00,G01S5/02	(71)**Name of Applicant :**
(31) Priority Document No	:61/708177	**1)TELEFONAKTIEBOLAGET L M ERICSSON (PUBL)**
(32) Priority Date	:01/10/2012	Address of Applicant :SE- 164 83 Stockholm Sweden
(33) Name of priority country	:U.S.A.	(72)**Name of Inventor :**
(86) International Application No	:PCT/EP2013/070448	**1)SIOMINA, Iana;**
Filing Date	:01/10/2013	**2)NEJATIAN, Alireza;**
(87) International Publication No	:WO 2014/053487	
(61) Patent of Addition to Application Number	:NA	
Filing Date	:NA	
(62) Divisional to Application Number	:NA	
Filing Date	:NA	

(57) Abstract :
A technique for obtaining a radio frequency (RF) performance metric estimate for a receiver used for at least one of a positioning measurement and a timing measurement is described. A method implementation of that technique includes the steps of calculating at least one of a detection probability and a false alarm rate for a radio signal usable for the measurement , and obtaining at least one RF performance metric estimate for the receiver based on at least one of the calculated detection probability and the calculated false alarm rate.

No. of Pages : 59 No. of Claims : 26

(12) PATENT APPLICATION PUBLICATION
(19) INDIA
(22) Date of filing of Application :20/03/2015
(21) Application No.2308/DELNP/2015 A
(43) Publication Date : 28/08/2015

(54) Title of the invention : TYRE DESIGNED TO BE ABLE TO RUN FLAT, COMPRISING A HYBRID CARCASS PLY

(51) International classification :B60C9/00
(31) Priority Document No :1259756
(32) Priority Date :12/10/2012
(33) Name of priority country :France
(86) International Application No :PCT/EP2013/071260
Filing Date :11/10/2013
(87) International Publication No :WO 2014/057082
(61) Patent of Addition to Application Number :NA
Filing Date :NA
(62) Divisional to Application Number :NA
Filing Date :NA

(71)**Name of Applicant :**
1)COMPAGNIE GENERALE DES ETABLISSEMENTS MICHELIN
Address of Applicant :12 ,Cours Sablon, F- 63000 Clermont -Ferrand France
2)MICHELIN RECHERCHE ET TECHNIQUE S.A.
(72)**Name of Inventor :**
1)VALLET, Solenne;
2)LEFEBVRE, Serge;
3)DENOUEIX, Jean-Yves;
4)GUILLAUMAIN, Jrmy;

(57) Abstract :
The tyre (10) designed to be able to run flat comprises a carcass reinforcement (32) containing at least one reinforcing element (36) comprising at least one multifilament strand (54) made of aramid and at least one multifilament strand (56) made of polyester which are twisted together.

No. of Pages : 22 No. of Claims : 10

(12) PATENT APPLICATION PUBLICATION
(19) INDIA
(22) Date of filing of Application :21/03/2015
(21) Application No.2309/DELNP/2015 A
(43) Publication Date : 28/08/2015

(54) Title of the invention : DEVICE AND METHOD FOR DETERMINING THE COMPOSITION OF A MIXTURE OF FLUIDS

(51) International classification :G01J5/02
(31) Priority Document No :0909662.9
(32) Priority Date :04/06/2009
(33) Name of priority country :U.K.
(86) International Application No :PCT/GB2010/001109
Filing Date :04/06/2010
(87) International Publication No : NA
(61) Patent of Addition to Application Number :NA
Filing Date :NA
(62) Divisional to Application Number :9245/DELNP/2011
Filed on :24/11/2011

(71)**Name of Applicant :**
1)PIETRO FIORENTINI S.P.A.
Address of Applicant :Via E. Fermi, 8/10, 36057 ARCUGNANO (Vicenza), Italy Italy
(72)**Name of Inventor :**
1)JONES, Robert
2)HAYES, Matthew, James
3)RYDER, Paul, David

(57) Abstract :
A device for determining the composition of a mixture of fluids that flow along a pipe, which comprises: a radiation source for illuminating the mixture with radiation; a detector for detecting radiation that has been attenuated by the mixture; a device for monitoring the flow rate of fluid along the pipe and outputting a signal indicative of the flow rate. The device includes a device for adjusting the intensity of radiation emitted by the radiation source in response to the signal indicative of the flow rate so that the intensity of the radiation source is reduced if the flow rate reduces.

No. of Pages : 41 No. of Claims : 15

(12) PATENT APPLICATION PUBLICATION
(19) INDIA
(22) Date of filing of Application :23/03/2012
(21) Application No.2528/DELNP/2012 A
(43) Publication Date : 28/08/2015

(54) Title of the invention : SCROLLING AND ZOOMING OF A PORTABLE DEVICE DISPLAY WITH MOTION

(51) International classification :G06F 3/033
(31) Priority Document No :12/590,413
(32) Priority Date :05/11/2009
(33) Name of priority country :U.S.A.
(86) International Application No :PCT/US2010/002868
Filing Date :29/10/2010
(87) International Publication No :WO 2011/056209
(61) Patent of Addition to Application Number :NA
Filing Date :NA
(62) Divisional to Application Number :NA
Filing Date :NA

(71)**Name of Applicant :**
1)TEMPLE, WILL JOHN
Address of Applicant :P.O. BOX 5548 INCLINE VILLAGE, NV 89450 (US) U.S.A.
(72)**Name of Inventor :**
1)TEMPLE, WILL JOHN

(57) Abstract :
A portable computing device with a display screen that may be scrolled and/or zoomed in response to changes in the spatial orientation of the computing device. Changes are sensed by accelerometers contained in the de¬vice. Software converts signals sent by the accelerometers to scrolling or zooming commands. Motion of the comput¬ing device in the plane of the display screen of the comput¬ing device results in scrolling the display screen in the op¬posing direction of the motion of the computing device a distance greater than the distance the computing device is moved. Motion of the computing device perpendicular to the plane of the display screen zooms the display screen in or out. Motion of the computing device toward the user re¬sults in the display being zoomed in revealing greater de¬tail. Motion of the computing device away from the user re¬sults in the display screen being zoomed out to reveal more content.

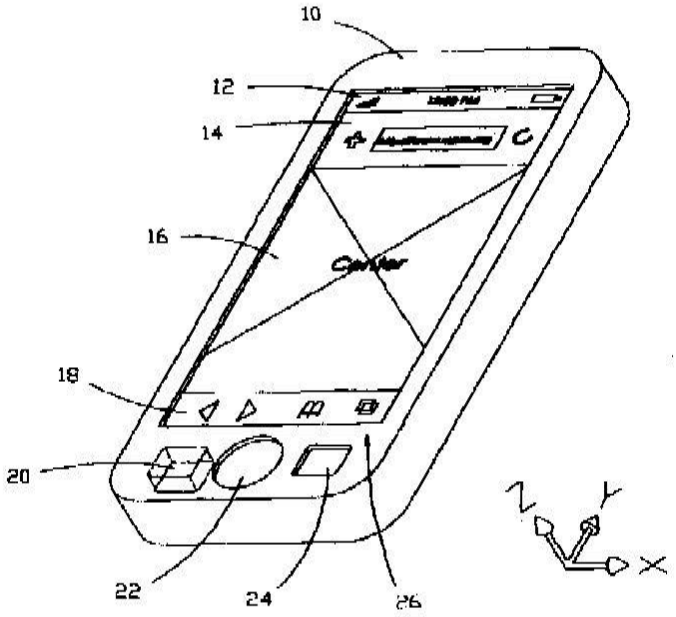

FIG. 1

No. of Pages : 36 No. of Claims : 31

(12) PATENT APPLICATION PUBLICATION
(21) Application No.2758/DELNP/2015 A
(19) INDIA
(22) Date of filing of Application :04/04/2015
(43) Publication Date : 28/08/2015

(54) Title of the invention : ADDING DEVICE -WIDE CAPABILITIES AND PARAMETERS TO SPLIT- ARCHITECTURE DEVICES

(51) International classification :H04L12/24,H04L29/06
(31) Priority Document No :13/667875
(32) Priority Date :02/11/2012
(33) Name of priority country :U.S.A.
(86) International Application No :PCT/IB2013/059554
Filing Date :22/10/2013
(87) International Publication No :WO 2014/068444
(61) Patent of Addition to Application Number :NA
Filing Date :NA
(62) Divisional to Application Number :NA
Filing Date :NA

(71)**Name of Applicant :**
1)TELEFONAKTIEBOLAGET L M ERICSSON (PUBL)
Address of Applicant :S- 164 83 Stockholm Sweden
(72)**Name of Inventor :**
1)HALPERN, Joel;

(57) Abstract :
A network element and process determines and configures capabilities of network element components. The network element components include a set of control elements where the set of control elements determine capabilities of each of a set of forwarding elements. The method includes initiating communication with a forwarding element in the set of forwarding elements by a control element. The control element requests that the forwarding element to provide a set of logical function block identifiers of supported logical function blocks for the forwarding element. The set of logical function block identifiers is then received from the forwarding element in response to the request. The set of logical function block identifiers are matched with known forwarding element capabilities to determine capabilities of the forwarding element. A forwarding element capability model is then updated with the capabilities of the forwarding element.

No. of Pages : 19 No. of Claims : 14

(12) PATENT APPLICATION PUBLICATION
(21) Application No.2321/DELNP/2015 A
(19) INDIA
(22) Date of filing of Application :21/03/2015
(43) Publication Date : 28/08/2015

(54) Title of the invention : METHOD AND APPARATUS FOR IN-LINE PROCESS CONTROL OF THE CIGS PROCESS

(51) International classification :H01L31/032
(31) Priority Document No :0400582-3
(32) Priority Date :05/03/2004
(33) Name of priority country :Sweden
(86) International Application No :PCT/SE2005/000333
Filing Date :04/03/2005
(87) International Publication No : NA
(61) Patent of Addition to Application Number :NA
Filing Date :NA
(62) Divisional to Application Number :5619/DELNP/2006
Filed on :26/09/2006

(71)**Name of Applicant :**
1)Solibro Research AB
Address of Applicant :Vallvgen 5, 756 51 Uppsala (SE) Sweden
(72)**Name of Inventor :**
1)STOLT, Lars
2)KESSLER, John

(57) Abstract :
An in-line production apparatus and a method for composition control of copper indium gallium diselenide (CIGS) solar cells fabricated by a co-evaporation deposition process is described. The deposition conditions are so that an deposited Cu-excessive overall composition is transformed into to a Cu-deficient overall composition, the final CIGS film. Substrates (21) with a molybdenum layer move through the CIGS process chamber (7) with constant speed. The transition from copper rich to copper deficient composition on a substrate is detected by using sensors which detect a physical parameter related to the transition, for example emission. In the alternative preferred embodiment of the invention sensors (20) are provided that detect the composition of elements in the deposited layer. A controller (17) connected to the sensors adjusts the fluxes from the evaporant sources (11, 12, 13) in order provide a CIGS layer with uniform composition and uniform thickness over the width of the substrate. The use of two rows of evaporant sources allows adjustment of the elemental composition and the thickness of the CIGS layer over the width of the substrate.

No. of Pages : 27 No. of Claims : 22

(12) PATENT APPLICATION PUBLICATION
(21) Application No.2546/DELNP/2012 A
(19) INDIA
(22) Date of filing of Application :23/03/2012
(43) Publication Date : 28/08/2015

(54) Title of the invention : COMPOUNDS OF THE FORMULA IV-1 TO IV-4

(51) International classification :C07F 9/40
(31) Priority Document No :03029730.3
(32) Priority Date :23/12/2003
(33) Name of priority country :EUROPEAN UNION
(86) International Application No :PCT/EP2004/014590
Filing Date :22/12/2004
(87) International Publication No :WO 2005/063780
(61) Patent of Addition to Application Number :NA
Filing Date :NA
(62) Divisional to Application Number :3604/DELNP/2006
Filed on :22/06/2006

(71)**Name of Applicant :**
1)DOW AGROSCIENCES LLC
Address of Applicant :9330 ZIONSVILLE ROAD, INDIANAPOLIS, IN 46268-1054, UNITED STATES OF AMERICA U.S.A.
(72)**Name of Inventor :**
1)JOACHIM GEBHARDT
2)NORBERT GOTZ
3)HAGEN JAEDICKE
4)GULDO MAYER
5)RACK MICHAEL

(57) Abstract :
Compounds of the formula IV-1 to IV-4 in which the variables have the following meanings: EnR6m= in which if n = m = 1 than E = S and R6 = C1-20-alkyl (branched or straight chain or cyclic); C6-20-aryl - which each of those may be substituted with one or more of the follow¬ing groups: F, CI, Br, I, C1-20-alkoxy, C6-20-aryloxy, amino; F; CI; Br; I; If n = 0 and m = 1 than R8 = H, C1-20-alkyl (branched or straight chain or cyclic); C6-20-aryl - which each of those may be substituted with one or more of the follow¬ing groups: F, CI, Br, I, C1-20-alkoxy, C6-20-aryloxy. amino; F; CI; Br; I; Y = - CN; -C(O)NH2;-C(O)OR7 with R7= C1-20-alkyl (branched or straight chain or cyclic); C6-20-aryl - which each of those may be substituted with one or more of the follow¬ing groups: F, CI, Br, I, C1-20-alkoxy, C6-20-aryloxy, amino; F, CI, Br, I. R' is equal or different independently means C1-20 alkyl, branched or straight or cyclic R3 = CN, NO2, C1-20-alkyl (branched or straight chain or cyclic); C6-20-aryl - which each of those may be substituted with one or more of the following groups: F, CI, Br, I, C1-20-alkoxy, C6-20-aryloxy, amino; F; CI; Br; I; G = -NH2 or a leaving group.

No. of Pages : 19 No. of Claims : 1

(12) PATENT APPLICATION PUBLICATION
(21) Application No.295/DEL/2015 A
(19) INDIA
(22) Date of filing of Application :02/02/2015
(43) Publication Date : 28/08/2015

(54) Title of the invention : TRAVEL SUPPORT DEVICE, TRAVEL SUPPORT METHOD, AND DRIVE SUPPORT SYSTEM

(51) International classification	:g01c	(71)**Name of Applicant :**
(31) Priority Document No	:2014-033462	**1)TOYOTA JIDOSHA KABUSHIKI KAISHA** Address of Applicant :1, Toyota-cho, Toyota-shi, Aichi-ken 471-8571, Japan Japan
(32) Priority Date	:24/02/2014	
(33) Name of priority country	:Japan	(72)**Name of Inventor :**
(86) International Application No	:NA	**1)Yuki OGAWA**
Filing Date	:NA	
(87) International Publication No	: NA	
(61) Patent of Addition to Application Number	:NA	
Filing Date	:NA	
(62) Divisional to Application Number	:NA	
Filing Date	:NA	

(57) Abstract :
A travel support device includes a planner adapted to plan vehicle travel modes to be respectively assigned to each of a plurality of sections into which a travel route from a current location to a destination is divided. To each of the sections, the planner is adapted to assign, based on a road load associated with each section, a travel mode among a first mode, in which the remaining energy charge of the battery of the vehicle is not maintained, and a second mode, in which the remaining energy charge of the battery is maintained. The planner is adapted to identify, from among the sections, an excessive altitude change section, in which a change of altitude is predicted to be greater than or equal to a predetermined value, and assign the second mode with priority to the excessive altitude change section.

No. of Pages : 35 No. of Claims : 10

(12) PATENT APPLICATION PUBLICATION
(21) Application No.2531/DELNP/2012 A
(19) INDIA
(22) Date of filing of Application :23/03/2012
(43) Publication Date : 28/08/2015

(54) Title of the invention : SYSTEM AND METHOD FOR GENERATING IVVR MENU

(51) International classification :H04N 7/14
(31) Priority Document No :200910208719.3
(32) Priority Date :27/10/2009
(33) Name of priority country :China
(86) International Application No :PCT/CN2010/072248
Filing Date :27/04/2010
(87) International Publication No :WO 2010/145335
(61) Patent of Addition to Application Number :NA
Filing Date :NA
(62) Divisional to Application Number :NA
Filing Date :NA

(71)**Name of Applicant :**
1)ZTE CORPORATION
Address of Applicant :ZTE PLAZA, KEJI ROAD SOUTH, HI-TECH INDUSTRIAL PARK, NANSHAN DISTRICT, SHENZHEN, GUANGDONG PROVINCE 518057, P.R. CHINA China
(72)**Name of Inventor :**
1)XIN LIAO
2)MANHAI LI
3)LONGJIANG ZHOU
4)YUNA SHEN

(57) Abstract :
The present invention discloses are a system and a method for generating an Interactive Voice and Video Response (IVVR) menu, and the above system comprises: an acquiring unit, adapted to acquire files uploaded by a user terminal, wherein the uploaded files comprise a first file and a second file, with the first file comprising a video file and/or a picture file, and the second file comprising an audio file and/or a text file; a video processing unit, adapted to convert the first file uploaded by the user terminal into a first predetermined format video stream; an audio processing unit, adapted to convert the second file uploaded by the user terminal into a second predetermined format audio stream; and a menu synthesizing unit, adapted to generate the IVVR menu with the video stream and the audio stream.The above technical solution is convenient for users to make the IVVR menu.

No. of Pages : 32 No. of Claims : 15

(12) PATENT APPLICATION PUBLICATION
(21) Application No.2756/DELNP/2015 A
(19) INDIA
(22) Date of filing of Application :03/04/2015
(43) Publication Date : 28/08/2015

(54) Title of the invention : GRAPHIC RENDERING

(51) International classification	:G06F9/455,G06F9/44
(31) Priority Document No	:201210379921.4
(32) Priority Date	:09/10/2012
(33) Name of priority country	:China
(86) International Application No	:PCT/US2013/063916
Filing Date	:08/10/2013
(87) International Publication No	:WO 2014/058902
(61) Patent of Addition to Application Number	:NA
Filing Date	:NA
(62) Divisional to Application Number	:NA
Filing Date	:NA

(71)**Name of Applicant :**
1)ALIBABA GROUP HOLDING LIMITED
Address of Applicant :Fourth Floor ,One Capital Place, P.O. Box 847, Grand Cayman Cayman Island
(72)**Name of Inventor :**
1)LIU, Hujia;
2)TAO, Junjie;
3)ZHU, Wenxiang;
4)WANG, Mingjian;

(57) Abstract :
The present disclosure provides example methods and apparatuses of conducting graphic rendering. JavaScript codes of a graphic application are obtained. The JavaScript codes include an API corresponding to a rendering function based on OPENGL. The API has a format complying with a standard of HTML 5 Canvas. The JavaScript codes are executed at a parsing engine. When the API of the JavaScript codes is executed, the parsing engine parses the API to obtain a corresponding rendering function based on OPENGL. The rendering function is called to conduct graphic rendering to a rendering target. The present techniques improve a speed of graphic rendering at a mobile device.

No. of Pages : 37 No. of Claims : 20

(12) PATENT APPLICATION PUBLICATION
(21) Application No.2757/DELNP/2015 A
(19) INDIA
(22) Date of filing of Application :03/04/2015
(43) Publication Date : 28/08/2015

(54) Title of the invention : DEVICES AND METHODS FACILITATING SLEEVE GASTRECTOMY PROCEDURES

(51) International classification :A61B17/00,A61B17/32,A61B17/22
(31) Priority Document No :61/719109
(32) Priority Date :19/10/2012
(33) Name of priority country :U.S.A.
(86) International Application No :PCT/US2013/065368
Filing Date :17/10/2013
(87) International Publication No :WO 2014/062881
(61) Patent of Addition to Application Number :NA
Filing Date :NA
(62) Divisional to Application Number :NA
Filing Date :NA

(71)**Name of Applicant :**
1)COVIDIEN LP
Address of Applicant :15 Hampshire Street, Mansfield, MA 02048 U.S.A.
(72)**Name of Inventor :**
1)TRFVEDI, M.D., AMIT;

(57) Abstract :
A device for use in bariatric surgery includes a tube member, a coupling member , and a rod member. The tube member includes a proximal portion and a distal portion having a distal end. The coupling member is affixed to the tube member. The rod member includes a proximal portion and a distal portion having a distal end. The rod member is slidably coupled with the coupling member. The distal end of the rod member is fixedly coupled to the distal end of the tube member. The proximal portion of the rod member is translatable relative to the tube member to transition the distal portion of the rod member between a contracted position, wherein the distal portion of the rod member extends along the distal portion of the tube member , and a deployed position , wherein the distal portion of the rod member bows outwardly relative to the tube member.

No. of Pages : 26 No. of Claims : 27

(12) PATENT APPLICATION PUBLICATION
(21) Application No.3799/DELNP/2012 A
(19) INDIA
(22) Date of filing of Application :01/05/2012
(43) Publication Date : 28/08/2015

(54) Title of the invention : BICYCLIC PYRIDINES AND ANALOGS AS SIRTUIN MODULATORS

(51) International classification :C07D 471/04
(31) Priority Document No :61/256,269
(32) Priority Date :29/10/2009
(33) Name of priority country :U.S.A.
(86) International Application No :PCT/US2010/054880
Filing Date :29/10/2010
(87) International Publication No :WO 2011/059839
(61) Patent of Addition to Application Number :NA
Filing Date :NA
(62) Divisional to Application Number :NA
Filing Date :NA

(71)**Name of Applicant :**
1)SIRTRIS PHARMACEUTICALS INC
Address of Applicant :200 TECHNOLOGY SQUARE, SUITE 300, CAMBRIDGE, MA 02139, U.S.A. U.S.A.
(72)**Name of Inventor :**
1)PUI YEE NG
2)CHARLES BLUM
3)LAUREN MCPHERSON
4)ROBERT B PERNI
5)CHI B. VU
6)MOHAMMED MAHMOOD AHMED
7)JEREMY S. DISCH

(57) Abstract :
Provided herein are novel sirtuin-modulating compounds and methods of use thereof. The sirtuin-modulating compounds may be used for increasing the lifespan of a cell, and treating and/or preventing a wide variety of diseases and disorders including, for example, diseases or disorders related to aging or stress, diabetes, obesity, neurodegenerative diseases, cardiovascular disease, blood clotting disorders, inflammation, cancer, and/or flushing as well as diseases or disorders that would benefit from increased mitochondrial activity. Also provided are compositions comprising a sirtuin-modulating compound in combination with another therapeutic agent.

No. of Pages : 247 No. of Claims : 28

(12) PATENT APPLICATION PUBLICATION
(21) Application No.2542/DELNP/2012 A
(19) INDIA
(22) Date of filing of Application :23/03/2012
(43) Publication Date : 28/08/2015

(54) Title of the invention : CUSHIONING ELEMENT

(51) International classification :B60R 21/207
(31) Priority Document No :10 2009 048 593.7
(32) Priority Date :07/10/2009
(33) Name of priority country :Germany
(86) International Application No :PCT/EP2010/005792
Filing Date :22/09/2010
(87) International Publication No :WO 2011/042119
(61) Patent of Addition to Application Number :NA
Filing Date :NA
(62) Divisional to Application Number :NA
Filing Date :NA

(71)**Name of Applicant :**
1)JOHNSON CONTROLS GMBH
Address of Applicant :INDUSTRIESTRASSE 20-30, 51399 BURSCHEID, GERMANY Germany
(72)**Name of Inventor :**
1)PHILIPPE MORILHAT
2)PAUL QUIRIN

(57) Abstract :
The invention relates to a cushioning element comprising a cover, a filler material and, in addition to said cover, at least one textile sheet surrounded by foam. Activation of an inflatable occupant protection device leads to the cover opening in a reliable and reproducible manner, wherein the at least one textile sheet is provided to control the opening of the cover when said inflatable occupant protection device is activated.

No. of Pages : 13 No. of Claims : 6

(12) PATENT APPLICATION PUBLICATION
(21) Application No.2543/DELNP/2012 A
(19) INDIA
(22) Date of filing of Application :23/03/2012
(43) Publication Date : 28/08/2015

(54) Title of the invention : SOLAR CONCENTRATOR SYSTEM WITH FIXED PRIMARY REFLECTOR AND ARTICULATING SECONDARY MIRROR

(51) International classification :F24J 2/10
(31) Priority Document No :61/245,250
(32) Priority Date :23/09/2009
(33) Name of priority country :U.S.A.
(86) International Application No :PCT/US2010/050039
Filing Date :23/09/2010
(87) International Publication No :WO 2011/038144
(61) Patent of Addition to Application Number :NA
Filing Date :NA
(62) Divisional to Application Number :NA
Filing Date :NA

(71)**Name of Applicant :**
1)EAGLE EYE RESEARCH, INC.
Address of Applicant :3112 DEVON ROAD, DURHAM, NC 27707-4545, UNITED STATES OF AMERICA U.S.A.
(72)**Name of Inventor :**
1)JOHN H. REIF
2)KATIE L. REIF

(57) Abstract :
Certain embodiments make use of an array of passive primary concentrators positioned on the ground that provide primary concentrated solar radiation from below to an array of tracking secondary concentrators. The secondary concentrators further concentrate the solar radiation to one or more centralized receivers. The solar concentrator system may include apparatus for collection of solar radiation, concentration, and the absorbance of the concentrated solar energy. Some embodiments of the solar concentrator system include a large field of passive horizontal primary concentrators, overhead tracking secondary concentrators, and one or more receivers, which convert solar radiation into usable products or energy, such as electricity.

No. of Pages : 124 No. of Claims : 20

(12) PATENT APPLICATION PUBLICATION
(19) INDIA
(22) Date of filing of Application :23/03/2012
(21) Application No.2544/DELNP/2012 A
(43) Publication Date : 28/08/2015

(54) Title of the invention : METHOD FOR FILLET ARC WELDING OF HIGH-STRENGTH THIN STEEL SHEETS

(51) International classification :B23K 9/23
(31) Priority Document No :2009-221132
(32) Priority Date :25/09/2009
(33) Name of priority country :Japan
(86) International Application No :PCT/JP2010/067194
Filing Date :24/09/2010
(87) International Publication No :WO 2011/037272
(61) Patent of Addition to Application Number :NA
Filing Date :NA
(62) Divisional to Application Number :NA
Filing Date :NA

(71)**Name of Applicant :**
1)NIPPON STEEL & SUMITOMO METAL CORPORATION
Address of Applicant :6-1, MARUNOUCHI 2-CHOME, CHIYODA-KU, TOKYO 100-8071, JAPAN Japan
(72)**Name of Inventor :**
1)TADASHI KASUYA

(57) Abstract :
A method for fillet arc welding of high-strength thin steel sheet is provided that enables excellent weld toe shape and improved weld joint fatigue properties even at a welding speed from greater than 110 cm/min to not greater than 150 cm/min. When conducting fillet arc welding of high-strength thin steel sheet of a tensile strength of 700 MPa or greater by gas shielded arc welding at a welding speed from greater than 110 cm/min to not greater than 150 cm/min, the method of the present invention uses as the steel sheet one containing C = 0.02 - 0.15%, Si = 0.2 - 1.8% and Mn = 0.5 - 2.5%, and combines the steel sheet with a wire used for the fillet arc welding to make {Si (steel sheet) + 0.1 x Si (wire)} > 0.32, where Si (steel sheet) is the Si content (mass%)of the steel sheet and Si (wire) is the Si content (mass%) of the wire for welding.

No. of Pages : 90 No. of Claims : 18

(12) PATENT APPLICATION PUBLICATION
(21) Application No.3807/DELNP/2012 A
(19) INDIA
(22) Date of filing of Application :01/05/2012
(43) Publication Date : 28/08/2015

(54) Title of the invention : THE USE OF CI-994 AND DINALINE FOR THE TREATMENT OF MEMORY-COGNITION AND ANXIETY DISORDERS

(51) International classification :A01N 37/12
(31) Priority Document No :61/256,927
(32) Priority Date :30/10/2009
(33) Name of priority country :U.S.A.
(86) International Application No :PCT/US2010/054872
Filing Date :29/10/2010
(87) International Publication No :WO 2011/053876
(61) Patent of Addition to Application Number :NA
Filing Date :NA
(62) Divisional to Application Number :NA
Filing Date :NA

(71)**Name of Applicant :**
1)MASSACHUSETTS INSTITUTE OF TECHNOLOGY
Address of Applicant :77 MASSACHUSETTS AVENUE, CAMBRIDGE, MA 02139, U.S.A. U.S.A.
2)THE GENERAL HOSPITAL CORPORATION D/B/A MASSACHUSETTS GENERAL HOSPITAL
3)THE BROAD INSTITUTE, INC.
(72)**Name of Inventor :**
1)TSAI, LI-HUEI
2)GUAN, JI-SONG
3)HAGGARTY, STEPHEN, J.
4)HOLSON, EDWARD
5)WAGNER, FLORENCE
6)GRAEFF, JOHANNES

(57) Abstract :
The invention relates to methods and compositions for promoting cognitive function and/or treating cognitive function disorders and impairments. In particular the methods are accomplished by administering to a subject CI-994 or dinaline or a pharmaceutically acceptable salt, ester, prodrug or metabolite thereof.

No. of Pages : 139 No. of Claims : 63

(12) PATENT APPLICATION PUBLICATION
(21) Application No.3808/DELNP/2012 A
(19) INDIA
(22) Date of filing of Application :01/05/2012
(43) Publication Date : 28/08/2015

(54) Title of the invention : PRODUCTION OF CALCIUM CARBONATE

(51) International classification :C01F 11/000
(31) Priority Document No :0917248.7
(32) Priority Date :02/10/2009
(33) Name of priority country :U.K.
(86) International Application No :PCT/EP2010/006036
Filing Date :04/10/2010
(87) International Publication No :WO 2011/038936
(61) Patent of Addition to Application Number :NA
Filing Date :NA
(62) Divisional to Application Number :NA
Filing Date :NA

(71)**Name of Applicant :**
1)CALCI TECH SYNTHETIC MINERALS LTD.
Address of Applicant :10, RTE DE 1' AEROPORT, P.O.BOX 261, GENEVA 15, CH-1215 (CH). Switzerland
(72)**Name of Inventor :**
1)JENSEN, CHRISTOPH
2)MARKWARDT, ILKA

(57) Abstract :
A method of producing calcium carbonate from lime comprises the steps of: (i) providing an aqueous solution comprising 10% to 35% by weight of dissolved polyhydroxy compound and 1% to 5% by weight of dissolved calcium hydroxide (expressed as Ca(OH)2) and having a pH of at least 11.5; (ii) treating the solution prepared in step (i) to remove solids including suspended solids; (iii) dispersing carbon dioxide through the solution so as to form calcium carbonate with a consequential reduction in the pH of the reaction mixture, (iv) during a time period beginning at the start of a sudden, short rise in pH and ended during a subsequent fall in pH but before it reaches 9.5 terminating the dispersion of carbon dioxide and adding an alkaline reagent to maintain a pH for the product mixture of at least 9.5, and (v) recovering precipitated calcium carbonate.

No. of Pages : 26 No. of Claims : 22

(12) PATENT APPLICATION PUBLICATION
(19) INDIA
(22) Date of filing of Application :13/12/2014

(21) Application No.10658/DELNP/2014 A
(43) Publication Date : 28/08/2015

(54) Title of the invention : METHANETHIONE COMPOUNDS HAVING ANTIVIRAL ACTIVITY

(51) International classification :C07D249/10,C07D261/18,A61K31/44
(31) Priority Document No :61/648700
(32) Priority Date :18/05/2012
(33) Name of priority country :U.S.A.
(86) International Application No :PCT/EP2013/060266
Filing Date :17/05/2013
(87) International Publication No :WO 2013/171334
(61) Patent of Addition to Application Number :NA
Filing Date :NA
(62) Divisional to Application Number :NA
Filing Date :NA

(71)**Name of Applicant :**
1)VIRONOVA AB
Address of Applicant :Gvlegatan 22 S 11330 Stockholm Sweden
(72)**Name of Inventor :**
1)HOMMAN Mohammed
2)KINGI Ngarita
3)BERGMAN Jan
4)BERG Robert

(57) Abstract :
A compound of formula (I) The compound is useful as an antiviral agent in particular for the treatment of influenza. A method for preparing the compound of formula (I) and a composition comprising the compound of formula (I).

No. of Pages : 43 No. of Claims : 27

(12) PATENT APPLICATION PUBLICATION
(21) Application No.10659/DELNP/2014 A
(19) INDIA
(22) Date of filing of Application :13/12/2014
(43) Publication Date : 28/08/2015

(54) Title of the invention : LOCKING SYSTEM FOR SLIDING AND PIVOTING DOORS SYSTEMS

(51) International classification :E05D15/58
(31) Priority Document No :NA
(32) Priority Date :NA
(33) Name of priority country :NA
(86) International Application No :PCT/EP2012/002933
Filing Date :12/07/2012
(87) International Publication No :WO 2014/008906
(61) Patent of Addition to Application Number :NA
Filing Date :NA
(62) Divisional to Application Number :NA
Filing Date :NA

(71)**Name of Applicant :**
1)ALLGLASS CONFORT SYSTEMS SL.
Address of Applicant :Polgono Industrial Alhaurn de la Torre Fase 1 Paseo de la Hispanidad nave 55 T4 B60 E 29130 M¡laga Spain
(72)**Name of Inventor :**
1)O'A GONZ • LEZ Francisco
2)LOZANO ESCUDERO Javier
3)P‰REZ FALCN Jorge Luis

(57) Abstract :
Locking system for sliding pivoting doors/panels (18 and 19) composed of: a guiding mechanism of the panels (18 and 19) placed in the sliding top track (21) and composed of a cap (8) an array of slots (9) and a guiding inverted T which complements the array of slots (9) which can be replaced by a protusion (25) of the top pivot part (24). A locking and unlocking mechanism of the panels (18 and 19) composed of a U shape profile (1) fixed to the wall U shape moving profile (4) a pair of elbow shape parts (2) a handle (3) two blocks (5) and two plates (6) being the width of the base (23) of the profile (1) slightly bigger than the base (22) of the moving profile (4) and fitting the U moving profile (4) into the profile (1).

No. of Pages : 21 No. of Claims : 5

(12) PATENT APPLICATION PUBLICATION
(21) Application No.2532/DELNP/2012 A
(19) INDIA
(22) Date of filing of Application :23/03/2012
(43) Publication Date : 28/08/2015

(54) Title of the invention : UMBILICAL CORD LINING STEM CELLS AND METHODS AND MATERIAL FOR ISOLATING AND CULTURING SAME

(51) International classification :C12N 5/074
(31) Priority Document No :61/245,123
(32) Priority Date :23/09/2009
(33) Name of priority country :U.S.A.
(86) International Application No :PCT/US2010/050025
Filing Date :23/09/2010
(87) International Publication No :WO 2011/038133
(61) Patent of Addition to Application Number :NA
Filing Date :NA
(62) Divisional to Application Number :NA
Filing Date :NA

(71)**Name of Applicant :**
1)DAVINCI BIOSCINECES LLC
Address of Applicant :1239 VICTORIA ST., SUITE 302, COSTA MESA, CA 92627, UNITED STATES OF AMERICA U.S.A.
(72)**Name of Inventor :**
1)FRANCISCO J. SILVA
2)RAFAEL GONZALEZ

(57) Abstract :
Human umbilical cord- lining stem cells that are capable of differentiating into cells of the mesodermal lineage and ectodermal lineage are described, as well as methods of iso¬lating, expanding, culturing, and cryopreserving such cells.

No. of Pages : 31 No. of Claims : 33

(12) PATENT APPLICATION PUBLICATION
(21) Application No.2533/DELNP/2012 A
(19) INDIA
(22) Date of filing of Application :23/03/2012
(43) Publication Date : 28/08/2015

(54) Title of the invention : INSTALLATION AND METHOD FOR CONTROLLING THE INSTALLATION FOR THE PRODUCTION OF POLYCRYSTALLINES SILICON

(51) International classification :C01B 33/035
(31) Priority Document No :10 2009 043 946.3
(32) Priority Date :04/09/2009
(33) Name of priority country :Germany
(86) International Application No :PCT/EP2010/059649
Filing Date :06/07/2010
(87) International Publication No :WO 2011/026670
(61) Patent of Addition to Application Number :NA
Filing Date :NA
(62) Divisional to Application Number :NA
Filing Date :NA

(71)**Name of Applicant :**
1)G+R TECHNOLOGY GROUP AG
Address of Applicant :BAYERNSTRASSE 16, 93128 REGENSTAUF, GERMANY Germany
(72)**Name of Inventor :**
1)ROBERT STOECKLINGER

(57) Abstract :
The invention relates to an installation and a method for the production of polycrystalline silicon in a monosilane process. The installation comprises at least one reactor (10), at least one converter (20), at least one injection reservoir (30) and at least one reactor (40). Every reactor (10) has a feed line (1 la) for a fresh gas mixture and a discharge line (41) for the partially consumed gas mixture. Every converter (20) has a feed line (41) for a gas mixture and every evaporator (40) has a discharge line (41) for a gas mixture. The installation mrther comprises a plurality of sampling elements (7) for test samples in the feed line (11a) and the discharge line (11b) of every reactor (L0) and in the discharge line (21) of every converter (20) and the discharge line (41) of every evaporator (40). The sampling elements (7) supply the test samples taken to at least one gas chromatograph (2) via re¬spective lines (8).

No. of Pages : 22 No. of Claims : 13

(12) PATENT APPLICATION PUBLICATION
(19) INDIA
(22) Date of filing of Application :23/03/2012
(21) Application No.2534/DELNP/2012 A
(43) Publication Date : 28/08/2015

(54) Title of the invention : PROTEIN KINASE CONJUGATES AND INHIBITORS

(51) International classification :A61K 31/519
(31) Priority Document No :61/242,988
(32) Priority Date :16/09/2009
(33) Name of priority country :U.S.A.
(86) International Application No :PCT/US2010/048916
Filing Date :15/09/2010
(87) International Publication No :WO 2011/034907
(61) Patent of Addition to Application Number :NA
Filing Date :NA
(62) Divisional to Application Number :NA
Filing Date :NA

(71)**Name of Applicant :**
1)AVILA THERAPEUTICS, INC.
Address of Applicant :100 BEAVER STREET, WALTHAM, MA 02453, UNITED STATES OF AMERICA U.S.A.
(72)**Name of Inventor :**
1)JUSWINDER SINGH
2)RUSSEL COLYN PETTER
3)DEQIANG NIU
4)LIXIN QIAO
5)ARTHUR KLUGE
6)ROY LOBB
7)SHOMIR GHOSH
8)ZHENDONG ZHU

(57) Abstract :
The invention relates to protein conjugates that contain a protein kinase containgn a cysteine residue in the ATP binding site and an inhibitor that is covalently and irreversibly bonded to said cysteine residue, such that the activity of the protein kinase is irreversibly inhibited. The invention also relates to compounds that irreversibly inhibit protein kinases.

No. of Pages : 306 No. of Claims : 59

(12) PATENT APPLICATION PUBLICATION
(21) Application No.3810/DELNP/2012 A
(19) INDIA
(22) Date of filing of Application :01/05/2012
(43) Publication Date : 28/08/2015

(54) Title of the invention : POWER GENERATING LAMP AND ILLUMINATION APPLIANCE

(51) International classification :F21S 9/02
(31) Priority Document No :2010/160470
(32) Priority Date :15/07/2010
(33) Name of priority country :Japan
(86) International Application No :PCT/JP2011/059364
Filing Date :15/04/2011
(87) International Publication No :WO 2012/008194
(61) Patent of Addition to Application Number :NA
Filing Date :NA
(62) Divisional to Application Number :NA
Filing Date :NA

(71)**Name of Applicant :**
1)NIHON ENERGY INSTITUTE CO., LTD.
Address of Applicant :414-2, MIKAGE, TOYOTOMI-CHO, HIMEJI-SHI, HYOGO 6792122 (JP) Japan
(72)**Name of Inventor :**
1)ONO, YOSHIKO

(57) Abstract :
Provided is a power generating lamp capable of effectively use electrical energy of lighting to generate high electromotive force. A solar panel (11) which receives light emitted from a rear surface of a lamp tube (14) with a linear or annular shape and generates electromotive force is formed in an arc shape in a cross-sectional view and has a length that is equal to or less than the total length of the lamp tube in the longitudinal direction or the total length thereof in the circumferential direction and is equal to or greater than the total length of a low-temperature region of the lamp tube in the longitudinal direction or the total length thereof in the circumferential direction and a width that is equal to or greater than one-fourth of the length of the outer circumference of the cross-section of the lamp tube and equal to or less than half the length of the outer circumference. A transparent heat-resistant layer (12) is formed on a light receiving surface of the solar panel and is attached to the rear surface of the lamp tube or is arranged on the rear side of the lamp tube such that a distance between the light receiving surface and the rear surface of the lamp tube is equal to or less than 10 mm. An electric wire (11A) extracts the electromotive force of the solar panel. In this way, a power generating lamp (10) is formed.

No. of Pages : 58 No. of Claims : 12

(12) PATENT APPLICATION PUBLICATION
(21) Application No.2327/DELNP/2015 A
(19) INDIA
(22) Date of filing of Application :23/03/2015
(43) Publication Date : 28/08/2015

(54) Title of the invention : OXYGEN- ABSORBING RESIN COMPOSITION AND OXYGEN- ABSORBING MULTILAYER BODY USING SAME

(51) International classification :C08L9/00,B32B27/00,B32B27/18
(31) Priority Document No :2012196994
(32) Priority Date :07/09/2012
(33) Name of priority country :Japan
(86) International Application No :PCT/JP2013/074056
Filing Date :06/09/2013
(87) International Publication No :WO 2014/038659
(61) Patent of Addition to Application Number :NA
Filing Date :NA
(62) Divisional to Application Number :NA
Filing Date :NA

(71)**Name of Applicant :**
1)MITSUBISHI GAS CHEMICAL COMPANY INC.
Address of Applicant :5- 2, Marunouchi 2- chome ,Chiyoda- ku, Tokyo 1008324 Japan
(72)**Name of Inventor :**
1)ITOH,takayoshi
2)KAGIMOTO, Kouta
3)WAKABAYASHI, jyun
4)YOKOSE, Emiko

(57) Abstract :
To provide: an oxygen- absorbing resin composition having good oxygen absorbing properties even in a form not substantially containing a photoinitiator and suppressing odor generation after oxygen -absorption; and an oxygen- absorbing multilayer body , etc. , using same. [Solution] An oxygen- absorbing resin composition containing a readily oxidizable thermoplastic resin and a transition metal catalyst, and initiating oxygen absorption by irradiating energy rays. The oxygen -absorbing resin composition contains, as the readily oxidizable thermoplastic resin , a polybutadiene (X) and a resin (Y) having a carbon- carbon double bond and a structural unit indicated by general formula (1) (in the formula R-R7 indicate - H , -CH3, - CH2R, -CHR2, -CR3, -OR, -COOR, -SiR3, -O- SiR3, - COCl, or a halogen atom , each can be the same or different, and R indicates a linear or a cyclic alkyl group , an alkenyl group, an alkyl halide group, an alkenyl halide group, or an aryl group.)

No. of Pages : 69 No. of Claims : 5

(12) PATENT APPLICATION PUBLICATION
(21) Application No.2328/DELNP/2015 A
(19) INDIA
(22) Date of filing of Application :23/03/2015
(43) Publication Date : 28/08/2015

(54) Title of the invention : NICOTINE COMPOSITION

(51) International classification :A24F47/00,A61M15/00,A61K31/465
(31) Priority Document No :1215273.2
(32) Priority Date :28/08/2012
(33) Name of priority country :U.K.
(86) International Application No :PCT/GB2013/052231
Filing Date :23/08/2013
(87) International Publication No :WO 2014/033437
(61) Patent of Addition to Application Number :NA
Filing Date :NA
(62) Divisional to Application Number :NA
Filing Date :NA

(71)**Name of Applicant :**
1)KIND CONSUMER LIMITED
Address of Applicant :79 Clerkenwell Road, London Greater London EC1R 5AR U.K.
(72)**Name of Inventor :**
1)HEARN, Alex;
2)LOWE,Stuart Bhimsen;
3)GUPTA, Ritika;
4)MOYSES, Chris;

(57) Abstract :
An inhalable composition comprising: nicotine or a pharmaceutically acceptable derivative or salt thereof; a propellant; a monohydric alcohol; and a glycol and/or glycol ether , characterised in that the ratio of monohydric alcohol : glycol or glycol ether by weight is from 6:1 to 1:1.

No. of Pages : 44 No. of Claims : 36

(12) PATENT APPLICATION PUBLICATION
(21) Application No.2547/DELNP/2012 A
(19) INDIA
(22) Date of filing of Application :23/03/2012
(43) Publication Date : 28/08/2015

(54) Title of the invention : BIODEGRADABLE FOAMS WITH IMPROVED DIMENSIONAL STABILITY

(51) International classification :A61K 9/70
(31) Priority Document No :61/245,743
(32) Priority Date :25/09/2009
(33) Name of priority country :U.S.A.
(86) International Application No :PCT/US2010049945
Filing Date :23/09/2010
(87) International Publication No :WO 2011/038081
(61) Patent of Addition to Application Number :NA
Filing Date :NA
(62) Divisional to Application Number :NA
Filing Date :NA

(71)**Name of Applicant :**
1)ARKEMA INC.
Address of Applicant :900 FIRST AVENUE, KING OF PRUSSIA, PENNSYLVANIA 19406, UNITED STATES OF AMERICA U.S.A.
(72)**Name of Inventor :**
1)BRETT L. VAN HORN
2)WILLIAM E. YACKABONIS

(57) Abstract :
The invention provides a blowing agent composition and method of making the same comprising mixing carbon dioxide and a co-blowing agent or a blowing agent selected from the group consisting of hydrofluorocarbons, hydrochlorofluorocarbons, hydrofluoroethers, hydrofluoroolefins, hydrochlorofluoroolefins, hydrobromofluoroolefins, hydrofluoroketones, hydrochloroolefins, fluoroiodocarbons, alkyl esters, water, and mixtures thereof. Also provided is a method of making a low density foam using the blowing agent composition, and a biodegradable or biorenewable foam formed from a foamable biodegradable or biorenewable resin composition and the blowing agent composition.

No. of Pages : 30 No. of Claims : 33

(12) PATENT APPLICATION PUBLICATION
(21) Application No.2548/DELNP/2012 A
(19) INDIA
(22) Date of filing of Application :23/03/2012
(43) Publication Date : 28/08/2015

(54) Title of the invention : MICROCAPSULES CONTAINING SALTS FOR FOOD PRODUCTS

(51) International classification :A01H
(31) Priority Document No :09011246.7
(32) Priority Date :02/09/2009
(33) Name of priority country :EPO
(86) International Application No :PCT/EP2010/005362
Filing Date :01/09/2010
(87) International Publication No : NA
(61) Patent of Addition to Application Number :NA
Filing Date :NA
(62) Divisional to Application Number :NA
Filing Date :NA

(71)**Name of Applicant :**
1)LIPOFOODS S.L.
Address of Applicant :C/ Isaac Peral 17 Pol. Ind. Cam Ral E-08850 Gav Spain Spain
(72)**Name of Inventor :**
1)Jamileh M. LAKKIS
2)Jos Mara GARC • A ANTN

(57) Abstract :
The present invention is directed to a composition for delivering edible salts into food products via microcapsules comprising a protein-polysaccharide shell matrix and an edible salt-containing active material.

No. of Pages : 18 No. of Claims : 16

(12) PATENT APPLICATION PUBLICATION
(21) Application No.3819/DELNP/2012 A
(19) INDIA
(22) Date of filing of Application :01/05/2012
(43) Publication Date : 28/08/2015

(54) Title of the invention : METHOD FOR THE SYNTHESIS OF 2-THIOHISTIDINE AND THE LIKE

(51) International classification :C07D 233/84
(31) Priority Document No :0956968
(32) Priority Date :06/10/2009
(33) Name of priority country :France
(86) International Application No :PCT/EP2010/064947
Filing Date :06/10/2010
(87) International Publication No :WO 2011/042478
(61) Patent of Addition to Application Number :NA
Filing Date :NA
(62) Divisional to Application Number :NA
Filing Date :NA

(71)**Name of Applicant :**
1)TETRAHEDRON
Address of Applicant :4BIS, ALLEE CHARLES V, F-94300 VINCENNES, FRANCE France
(72)**Name of Inventor :**
1)ERDELMEIER, IRENE
2)DAUNAY, SYLVAIN

(57) Abstract :
The invention relates to a method for the synthesis of 2-thiohistidine or a derivative thereof of the formula (I), or of a physiologically acceptable salt, a tautomer, a stereoisomer or a mixture of stereoisomers in any proportions thereof, from a compound of the formula (II) or a physiologically acceptable salt, a tautomer, a stereoisomer or a mixture of stereoisomers in any proportions thereof, by cleavage reaction in the presence of a thiol at a temperature higher than or equal to 60°C. The invention also relates to compounds of the formula (II) and a method for the synthesis thereof.

No. of Pages : 40 No. of Claims : 14

(12) PATENT APPLICATION PUBLICATION
(21) Application No.2331/DELNP/2015 A
(19) INDIA
(22) Date of filing of Application :23/03/2015
(43) Publication Date : 28/08/2015

(54) Title of the invention : METHOD FOR OPERATING BLAST FURNACE AND METHOD FOR PRODUCING MOLTEN PIG IRON

(51) International classification :C21B5/00
(31) Priority Document No :2012268588
(32) Priority Date :07/12/2012
(33) Name of priority country :Japan
(86) International Application No :PCT/JP2013/082589
Filing Date :04/12/2013
(87) International Publication No :WO 2014/088031
(61) Patent of Addition to Application Number :NA
Filing Date :NA
(62) Divisional to Application Number :NA
Filing Date :NA

(71)**Name of Applicant :**
1)NIPPON STEEL & SUMIKIN ENGINEERING CO. LTD.
Address of Applicant :Osaki Center Building 1- 5 -1, Osaki ,Shinagawa- ku Tokyo 14-18604 Japan
(72)**Name of Inventor :**
1)ICHIKAWA, Hiroshi
2)OOSAWA, Yasuyuki
3)HAYASHI, Takafumi
4)TOMISAKI, Shin

(57) Abstract :
Provided is a method for operating a blast furnace , said method including the following steps: a first step in which a coke charging amount is adjusted while a furnace- top temperature (T top) is monitored; a second step in which a pulverized- coal injection amount is adjusted while an intra- furnace superficial gas flow rate (u) and the furnace- top temperature (Ttop) are monitored; a third step in which the oxygen -enrichment ratio of oxygen- enriched air is adjusted while a tuyere combustion temperature (Tf) and the furnace- top temperature (T top) are monitored; and a fourth step in which , in accordance with the intra- furnace superficial gas flow rate (u), it is determined whether or not an oxygen -enriched -air injection amount needs to be adjusted.

No. of Pages : 45 No. of Claims : 14

(12) PATENT APPLICATION PUBLICATION
(21) Application No.2551/DELNP/2012 A
(19) INDIA
(22) Date of filing of Application :23/03/2012
(43) Publication Date : 28/08/2015

(54) Title of the invention : NOVEL PHENOL DERIVATIVE

(51) International classification :C07C
(31) Priority Document No :2009-227402
(32) Priority Date :30/09/2009
(33) Name of priority country :Japan
(86) International Application No :PCT/JP2010/066925
Filing Date :29/09/2010
(87) International Publication No : NA
(61) Patent of Addition to Application Number :NA
Filing Date :NA
(62) Divisional to Application Number :NA
Filing Date :NA

(71)**Name of Applicant :**
1)FUJI YAKUHIN CO. LTD.
Address of Applicant :4-383 Sakuragi-cho Omiya-ku Saitama-shi Saitama 3300854 Japan Japan
(72)**Name of Inventor :**
1)KOBASHI Seiichi
2)UDA Junichiro
3)MIYATA Sachiho
4)INOUE Tsutomu
5)ASHIZAWA Naoki
6)MATSUMOTO Koji
7)TANIGUCHI Tetsuya
8)IWANAGA Takashi
9)NAGATA Osamu

(57) Abstract :
Disclosed are a novel compound and a pharmaceutical product each having a remarkable uricosuric effect. Specifically disclosed are: a novel phenol derivative represented by general formula (1) that is shown in Fig. 1; a pharmaceutically acceptable salt thereof; a hydrate of the derivative or the salt; and a solvate of the derivative or the salt. (In the formula R1 and R2 may be the same or different and each represents a lower alkyl group a lower alkenyl group a lower alkynyl group a lower alkoxy group a haloalkyl group a haloalkoxy group an alkylsulfanyl group an alkylsulfinyl group an alkylsulfonyl group

No. of Pages : 117 No. of Claims : 13

(12) PATENT APPLICATION PUBLICATION
(21) Application No.2552/DELNP/2012 A
(19) INDIA
(22) Date of filing of Application :23/03/2012
(43) Publication Date : 28/08/2015

(54) Title of the invention : CONNECTED HEAT CONDUCTING STRUCTURES IN SOLID AMMONIA STORAGE SYSTEMS

(51) International classification :C14B
(31) Priority Document No :12/570,426
(32) Priority Date :30/09/2009
(33) Name of priority country :U.S.A.
(86) International Application No :PCT/EP2010/005982
Filing Date :30/09/2010
(87) International Publication No : NA
(61) Patent of Addition to Application Number :NA
Filing Date :NA
(62) Divisional to Application Number :NA
Filing Date :NA

(71)**Name of Applicant :**
1)Amminex EMISSIONS TECHNOLOGY A/S
Address of Applicant :GLADSAXEVEJ 363, 2860 SOBORG, DENMARK; Denmark
(72)**Name of Inventor :**
1)SVAGIN Jakob
2)QUAADE Ulrich J.
3)JOHANSEN Johnny
4)WAGNER-PEDERSEN Henrik
5)JOHANNESSEN Tue

(57) Abstract :
A compacted block of material constructed of one or more units consisting of matter comprising an ammonia-saturated material capable of reversibly desorbing and ad- or absorbing ammonia surrounded by a gas-permeableenclosure made of a flexible material having a thermal conductivity of at least about five times the thermal conductivity of said ammonia-saturated material at 70°C to 250°C and methods for producing the same are described.

No. of Pages : 35 No. of Claims : 27

(12) PATENT APPLICATION PUBLICATION
(21) Application No.3815/DELNP/2012 A
(19) INDIA
(22) Date of filing of Application :01/05/2012
(43) Publication Date : 28/08/2015

(54) Title of the invention : VEGATABLE OIL COMPRISING A POLYUNSATURATED FATTY ACID HAVING AT LEAST 20 CARBON ATOMS

(51) International classification :A23D 9/00
(31) Priority Document No :61/257,772
(32) Priority Date :03/11/2009
(33) Name of priority country :U.S.A.
(86) International Application No :PCT/EP2010/066599
Filing Date :02/11/2010
(87) International Publication No :WO 2011/054801
(61) Patent of Addition to Application Number :NA
Filing Date :NA
(62) Divisional to Application Number :NA
Filing Date :NA

(71)**Name of Applicant :**
1)DSM IP ASSETS B. V.
Address of Applicant :HET OVERLOON 1, NL - 6411 TE HEERLEN, THE NETHERLANDS, Netherlands
(72)**Name of Inventor :**
1)VERKOEIJEN, DANIEL
2)ZUUR, KRISTIAN
3)BIJL, HENDRIK LOUIS

(57) Abstract :
The present invention describes a vegetable oil comprising a polyunsatured fatty acid having at least 20 carbon atoms (LC-PUFA), which oil has (a) an anisidine value (An V) of less than 25; (b) a peroxide value (POV) of less than 10; (c) a triglyceride content of greater than 90%; and/or (d) an Oil Stability Index (OSI) of greater than 5 hours at 80 °C.

No. of Pages : 22 No. of Claims : 49

(12) PATENT APPLICATION PUBLICATION
(19) INDIA
(22) Date of filing of Application :01/05/2012
(21) Application No.3817/DELNP/2012 A
(43) Publication Date : 28/08/2015

(54) Title of the invention : BIOMARKERS FOR PREDICTING THE SENSITIVITY AND RESPONSE OF PROTEIN KINASE CK2-MEDICATED DISEASES TO CK2 INHIBITORS

(51) International classification :G01N 33/50
(31) Priority Document No :61/248,270
(32) Priority Date :02/10/2009
(33) Name of priority country :U.S.A.
(86) International Application No :PCT/US2010/051341
Filing Date :04/10/2010
(87) International Publication No :WO 2011/041785
(61) Patent of Addition to Application Number :NA
Filing Date :NA
(62) Divisional to Application Number :NA
Filing Date :NA

(71)**Name of Applicant :**
1)CYLENE PHARMACEUTICALS
Address of Applicant :5820 NANCY RIDGE DRIVE, SUITE 200, SAN DIEGO, CALIFORNIA 92121, U.S.A. U.S.A.
(72)**Name of Inventor :**
1)DRYGIN, DENIS
2)O'BRIEN, SEAN
3)ANDERES, KENNA
4)VONHOFF, DANIEL, D.
5)LIM, JOHN, K. C.
6)PADGETT, CLAIRE, S.
7)BLIESATH, JOSHUA, R.
8)HO, CAROLINE, B.
9)RICE, WILLIAM G.
10)SIDDIQUI-JAIN, ADAM

(57) Abstract :
Disclosed are biomarkers for determining the sensitivity of protein kinase CK2-mediated diseases, such as proliferative and/or inflammatory disorders, to treatment with CK2 inhibitors. These biomarkers can be used to predict or select subjects likely to be responsive to treatment with a CK2 inhibitor, and to treat or monitor subjects undergoing treatment with a CK2 inhibitor.

No. of Pages : 156 No. of Claims : 31

(12) PATENT APPLICATION PUBLICATION
(21) Application No.3818/DELNP/2012 A
(19) INDIA
(22) Date of filing of Application :01/05/2012
(43) Publication Date : 28/08/2015

(54) Title of the invention : METHOD FOR SYNTHESIZING ERGOTHIONEINE AND ANALOGUES THEREOF

(51) International classification :C07D 233/84
(31) Priority Document No :0956962
(32) Priority Date :06/10/2009
(33) Name of priority country :France
(86) International Application No :PCT/EP2010/064950
Filing Date :06/10/2010
(87) International Publication No :WO 2011/042480
(61) Patent of Addition to Application Number :NA
Filing Date :NA
(62) Divisional to Application Number :NA
Filing Date :NA

(71)**Name of Applicant :**
1)TETRAHEDRON
Address of Applicant :4BIS, ALLEE CHARLES V, F-94300 VINCENNES, FRANCE France
(72)**Name of Inventor :**
1)ERDELMEIER, IRENE

(57) Abstract :
The present invention relates to a method for synthesizing ergothioneine or one of the derivatives thereof of following formula (I): or a physiologically acceptable salt, a tautomer, a stereoisomer or a mixture of stereoisomers in all proportions thereof, from a compound of betaine type of following formula (II): or a physiologically acceptable salt, a tautomer, a stereoisomer or a mixture of stereoisomers in all proportions thereof, by cleavage reaction in the presence of a thiol, at a temperature above or equal to 60°C. The present invention also relates to compounds of formula (II) and the method of synthesis thereof.

No. of Pages : 35 No. of Claims : 15

(12) PATENT APPLICATION PUBLICATION
(21) Application No.2556/DELNP/2012 A
(19) INDIA
(22) Date of filing of Application :23/03/2012
(43) Publication Date : 28/08/2015

(54) Title of the invention : SUBSTITUTED PYRAZOLES AS ESTROGEN RECEPTOR LIGANDS

(51) International classification :C07D 231/14
(31) Priority Document No :0917576.1
(32) Priority Date :07/10/2009
(33) Name of priority country :U.K.
(86) International Application No :PCT/EP2010/064941
Filing Date :06/10/2010
(87) International Publication No :WO 2011/042475
(61) Patent of Addition to Application Number :NA
Filing Date :NA
(62) Divisional to Application Number :NA
Filing Date :NA

(71)**Name of Applicant :**
1)KARO BIO AB
Address of Applicant :NOVUM, S-141 57 HUDDINGS, S-141 57 HUDDINGS, SWEDEN Sweden
(72)**Name of Inventor :**
1)LOFSTEDT, JOAKIM
2)WU, XIONGYU
3)KRUGER, LARS

(57) Abstract :
The invention provides a compound of formula (I) wherein G is a pyrazole ring as defined in the specification and R4, R5, R6 and R7 are as defined in the specification; or a pharmaceutically acceptable ester, amide, solvate or salt thereof, including a salt of such an ester or amide, and a solvate of such an ester, amide or salt. The invention also provides the use of such compounds in the treatment or prophylaxis of a condition associated with a disease or disorder associated with estrogen receptor activity.

No. of Pages : 85 No. of Claims : 31

(12) PATENT APPLICATION PUBLICATION
(19) INDIA
(22) Date of filing of Application :23/03/2012
(21) Application No.2557/DELNP/2012 A
(43) Publication Date : 28/08/2015

(54) Title of the invention : A COMPENSATING ARRANGEMENT FOR A VARIABLE COMPRESSION RATIO ENGINE

(51) International classification :F02B 75/04
(31) Priority Document No :PL388876
(32) Priority Date :25/08/2009
(33) Name of priority country :Poland
(86) International Application No :PCT/EP2010/062402
Filing Date :25/08/2010
(87) International Publication No :WO 2011/023725
(61) Patent of Addition to Application Number :NA
Filing Date :NA
(62) Divisional to Application Number :NA
Filing Date :NA

(71)**Name of Applicant :**
1)GLOGOWSKI, MICHAL
Address of Applicant :UL. PIENINY 5 M. 1, PL-92-003 LODZ, POLAND Poland
(72)**Name of Inventor :**
1)GLOGOWSKI, MICHAL

(57) Abstract :
A compensating arrangement for a variable compression ratio engine, the compensating arrangement comprising a piston (1) reciprocally movable in a guiding sleeve (2) having an open end (24) in communication with a combustion cylinder of the engine and a closed end (11, 30), wherein the arrangement further comprises a first pneumatic cushion (20) formed between the closed end (11, 30) of the guiding sleeve (2) and the internal surface of the piston (1) such as to limit the movement of the piston (1) towards the closed end (11, 30) of the guiding sleeve (2), a second pneumatic cushion (19) formed between the guiding sleeve (2) and the external surface of the piston (1) such as to limit the movement of the piston (1) towards the open end (24) of the guiding sleeve (2), and a check valve (18) configured to provide pneumatic medium to the second pneumatic cushion (19) in amount dependent on the displacement of the piston (1) during its movement towards the closed end (11, 30) of the guiding sleeve (2).

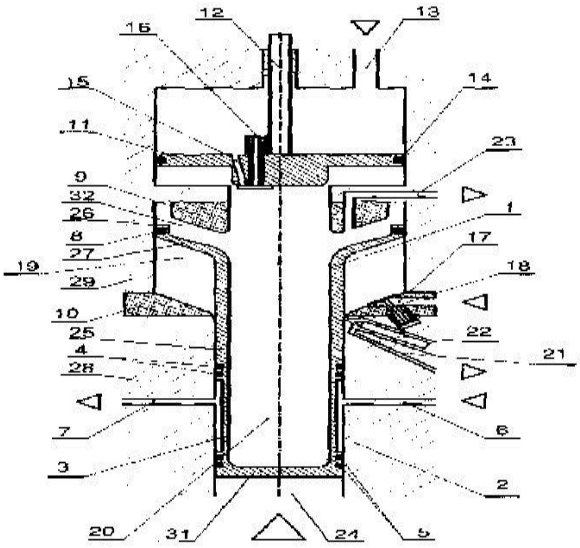

Fig. 1

No. of Pages : 24 No. of Claims : 26

(12) PATENT APPLICATION PUBLICATION
(21) Application No.3826/DELNP/2012 A
(19) INDIA
(22) Date of filing of Application :01/05/2012
(43) Publication Date : 28/08/2015

(54) Title of the invention : MANAGEMENT SYSTEM CALCULATING STORAGE CAPACITY TO BE INSTALLED/REMOVED

(51) International classification :G06F 12/00
(31) Priority Document No :NA
(32) Priority Date :NA
(33) Name of priority country :NA
(86) International Application No :PCT/JP2010/000516
Filing Date :28/01/2010
(87) International Publication No :WO 2011/092739
(61) Patent of Addition to Application Number :NA
Filing Date :NA
(62) Divisional to Application Number :NA
Filing Date :NA

(71)**Name of Applicant :**
1)HITACHI, LTD.
Address of Applicant :6-6, MARUNOUCHI 1-CHOME, CHIYODA-KU, TOKYO 100-8280, JAPAN Japan
(72)**Name of Inventor :**
1)NAGANUMA YUKI
2)IKEDA HIROKAZU
3)EMARU HIRONORI
4)MURAYAMA KOICHI
5)KANNO SHINICHIRO

(57) Abstract :
A storage apparatus coupled to a host device comprises a virtual volume which is a virtual logical volume configured of multiple virtual areas and a pool configured of multiple actual area groups of different performances. A controller manages pool status information which is the information showing which actual area is allocated to which virtual area and access load related to the virtual areas. A management system of the storage apparatus, with reference to the pool status information at multiple points of time from past to present and an access load threshold which is equal to or larger than 1, estimates the used capacity of each actual area group at points of time in the future, calculates the installed/removed amount of each actual area group which is the difference between the estimated used capacity and the current storage capacity, and performs the processing based on the calculated result.

No. of Pages : 118 No. of Claims : 15

(12) PATENT APPLICATION PUBLICATION
(21) Application No.3827/DELNP/2012 A
(19) INDIA
(22) Date of filing of Application :01/05/2012
(43) Publication Date : 28/08/2015

(54) Title of the invention : DEVICES AND METHODS FOR MODULATING BRAIN ACTIVITY

(51) International classification :A47J
(31) Priority Document No :61/257,915
(32) Priority Date :04/11/2009
(33) Name of priority country :U.S.A.
(86) International Application No :PCT/US2010/055527
Filing Date :04/11/2010
(87) International Publication No :WO 2011/057028
(61) Patent of Addition to Application Number :NA
Filing Date :NA
(62) Divisional to Application Number :NA
Filing Date :NA

(71)**Name of Applicant :**
1)ARIZONA BOARD OF REGENTS FOR AND ON BEHALF OF ARIZONA STATE UNIVERSITY
Address of Applicant :1475 NORTH SCOTTSDALE ROAD, SKY SONG - SUITE 200, SCOTTSDALE, AZ 85257-3538 U.S.A. U.S.A.
(72)**Name of Inventor :**
1)TYLER WILLIAM JAMES P.

(57) Abstract :
Devices and methods for brain modulation are provided herein. A device may comprise a body and components for activating the brain. Such components include ultrasound transducers. The devices are used to provide ultrasound waves to brain structures in a subject wearing a device for methods to treat traumatic brain injury, affect postural control, affect wakefulness, attention, and alertness, to provide memory control, to alter cerebrovascular hemodynamics, to minimize stress, and to reinforce behavioral actions.

No. of Pages : 106 No. of Claims : 87

(12) PATENT APPLICATION PUBLICATION
(19) INDIA
(22) Date of filing of Application :23/03/2015
(21) Application No.2329/DELNP/2015 A
(43) Publication Date : 28/08/2015

(54) Title of the invention : OVERFILL PREVENTION VALVE

(51) International classification :B67D7/36
(31) Priority Document No :61/701347
(32) Priority Date :14/09/2012
(33) Name of priority country :U.S.A.
(86) International Application No :PCT/US2013/057884
Filing Date :03/09/2013
(87) International Publication No :WO 2014/042913
(61) Patent of Addition to Application Number :NA
Filing Date :NA
(62) Divisional to Application Number :NA
Filing Date :NA

(71)**Name of Applicant :**
1)FRANKLIN FUELING SYSTEMS INC.
Address of Applicant :3760 Marsh Road Madison WI 53718 U.S.A.
(72)**Name of Inventor :**
1)KUEHN, JUSTIN
2)NELSON, BILL
3)LAUNDRIE, DAVID
4)O'FLAHRITY, MACHAEL
5)BACKHAUS, ERIK

(57) Abstract :
An overfill valve associated with a drop tube segment fluidly connected to a fluid reservoir and a structure for securing drop tube segments are described. The overfill valve includes a valve body positioned within the drop tube segment and in certain embodiments a non contact valve actuator positioned exterior to the drop tube segment and operable to actuate the valve body from an open position to a closed position without requiring any physical penetration through the wall of the drop tube segment. A variety of internal actuators are used to actuate the valve body within the drop tube segment. The structure for securing drop tube segments provides a first drop tube segment with a groove into which the wall of a second drop tube segment can to deformed to seal and fasten the two drop tube segments to each other.

No. of Pages : 127 No. of Claims : 92

(12) PATENT APPLICATION PUBLICATION
(21) Application No.2330/DELNP/2015 A
(19) INDIA
(22) Date of filing of Application :23/03/2015
(43) Publication Date : 28/08/2015

(54) Title of the invention : VAD INTEGRATED FLOW SENSOR

(51) International classification :A61M1/10
(31) Priority Document No :61/697087
(32) Priority Date :05/09/2012
(33) Name of priority country :U.S.A.
(86) International Application No :PCT/US2013/058253
Filing Date :05/09/2013
(87) International Publication No :WO 2014/039673
(61) Patent of Addition to Application Number :NA
Filing Date :NA
(62) Divisional to Application Number :NA
Filing Date :NA

(71)**Name of Applicant :**
1)HEARTWARE, INC.
Address of Applicant :14420 NW 57th Court, Miami Lakes, FL 33014 U.S.A.
(72)**Name of Inventor :**
1)TAMEZ, Dan
2)VOSKOBOYNIKOV, Neil

(57) Abstract :
A blood pump with an integrated flow sensor is provided. The blood pump may include an implantable pump for pumping blood having a housing , a flow path extending within the housing and at least one movable element within the housing for impelling blood along the flow path and a sensor for measuring the flow rate of blood through the pump. According to one embodiment , the sensor may be mounted to the housing of the pump. In accordance with a further embodiment, the housing may have an exterior surface defining a cavity , and the sensor may be located within the cavity.

No. of Pages : 21 No. of Claims : 15

(12) PATENT APPLICATION PUBLICATION
(21) Application No.2550/DELNP/2012 A
(19) INDIA
(22) Date of filing of Application :23/03/2012
(43) Publication Date : 28/08/2015

(54) Title of the invention : GALVANIC WASTE SLUDGE TREATMENT AND MANUFACTURING OF NANO-SIZED IRON OXIDES

(51) International classification :C07C
(31) Priority Document No :200860
(32) Priority Date :10/09/2009
(33) Name of priority country :Israel
(86) International Application No :PCT/IL2010/000737
Filing Date :07/09/2010
(87) International Publication No : NA
(61) Patent of Addition to Application Number :NA
Filing Date :NA
(62) Divisional to Application Number :NA
Filing Date :NA

(71)**Name of Applicant :**
1)GREEN FUTURE LTD.
Address of Applicant :50 Hacarmel Street 76305 Rehovot Israel
Israel
(72)**Name of Inventor :**
1)BOIKO Vladimir
2)SCHAPIRO Reuben

(57) Abstract :
The invention enables processing waste sludge after galvanic treatment of metals and particularly recycling spent pickling acids after pickling. Provided is an environmentally friendly process which yields acids for reuse and pure nano-sized iron pigments as a side product.

No. of Pages : 22 No. of Claims : 14

(12) PATENT APPLICATION PUBLICATION
(21) Application No.3831/DELNP/2012 A
(19) INDIA
(22) Date of filing of Application :01/05/2012
(43) Publication Date : 28/08/2015

(54) Title of the invention : INTRAMEDULLARY SYSTEM AND METHOD

(51) International classification :A61B 17/58
(31) Priority Document No :61/262,878
(32) Priority Date :19/11/2009
(33) Name of priority country :U.S.A.
(86) International Application No :PCT/US2010/057344
Filing Date :19/11/2010
(87) International Publication No :WO 2011/063184
(61) Patent of Addition to Application Number :NA
Filing Date :NA
(62) Divisional to Application Number :NA
Filing Date :NA

(71)**Name of Applicant :**
1)DGIMED ORTHO, INC.
Address of Applicant :12400 WHITEWATER DRIVE, SUITE 2010, MINNETONKA, MINNESOTA 55343, U.S.A. U.S.A.
(72)**Name of Inventor :**
1)CORNEILLE PATRICK R.
2)PFAHNL ANDREAS CARL
3)MCMAHAN MARK A.
4)GRAHAM GARY L.
5)LING JEREMY J.

(57) Abstract :
A system and method for drilling soft tissue and positioning an intramedullary rod in a long bone is provided. The system includes an intramedullary rod having an internal channel sized to provide a tight fit for a drill assembly. The system also includes a step pin used for marking the position of a pilot hole drilled through the bone within which the intramedullary rod is positioned.

No. of Pages : 58 No. of Claims : 25

(12) PATENT APPLICATION PUBLICATION
(21) Application No.3832/DELNP/2012 A
(19) INDIA
(22) Date of filing of Application :01/05/2012
(43) Publication Date : 28/08/2015

(54) Title of the invention : METHODS AND DEVICES FOR DISPLACING BODY CONVECTION AND PROVIDING A CONTROLLED PERSONAL BREATHING ZONE

(51) International classification :F24F 3/16
(31) Priority Document No :61/249,500
(32) Priority Date :07/10/2009
(33) Name of priority country :U.S.A.
(86) International Application No :PCT/IB2010/002548
Filing Date :07/10/2010
(87) International Publication No :WO 2011/042801
(61) Patent of Addition to Application Number :NA
Filing Date :NA
(62) Divisional to Application Number :NA
Filing Date :NA

(71)**Name of Applicant :**
1)AIRSONETT AB
Address of Applicant :METALLGATAN 33, S-26272 ANGELHOLM, SWEDEN. Sweden
(72)**Name of Inventor :**
1)KRISTENSSON DAN ALLAN ROBERT
2)SVENSSON PAL MARTIN
3)SONDEN NIKLAS

(57) Abstract :
Methods and devices are provided whereby a controlled personal breathing zone is maintained using temperature controlled laminar air flow (TLA) of filtered air. A substantially laminar, descending flow of filtered air is maintained with a velocity determined by the air-temperature difference between the supplied air and the ambient air at the level of the personal breathing zone. The air-temperature of the filtered supply air can be carefully adjusted to maintain the velocity-determining difference in air-temperature within the optimum range of 0.3 to 1 °C. Thus being able to at the same time displace body convection and achieve comfort.

No. of Pages : 28 No. of Claims : 13

(12) PATENT APPLICATION PUBLICATION
(21) Application No.3833/DELNP/2012 A
(19) INDIA
(22) Date of filing of Application :01/05/2012
(43) Publication Date : 28/08/2015

(54) Title of the invention : COLD-ROLLED MATERIAL MANUFACTURING EQUIPMENT AND COLD ROLLING METHOD

(51) International classification :B21B 1/36
(31) Priority Document No :NA
(32) Priority Date :NA
(33) Name of priority country :NA
(86) International Application No :PCT/JP2009/070926
Filing Date :15/12/2009
(87) International Publication No :WO 2011/074080
(61) Patent of Addition to Application Number :NA
Filing Date :NA
(62) Divisional to Application Number :NA
Filing Date :NA

(71)**Name of Applicant :**
1)MITSUBISHI-HITACHI METALS MACHINERY, INC.
Address of Applicant :34-6, SHIBA 5-CHOME, MINATO-KU, TOKYO 108-0014 JAPAN. Japan
(72)**Name of Inventor :**
1)KAGA SHINICHI
2)ONOSE MITSURU
3)TOMINAGA NORIAKI
4)SAITO TAKEHIKO
5)YOSHIMURA YASUTSUGU
6)MAENO ICHIROU
7)MASUDA TOYOTSUGU

(57) Abstract :
Disclosed are cold-rolled material manufacturing equipment and a cold rolling method by which a high investment cost-effectiveness is realized while maintaining a high efficiency and a high yield in a small- to medium-scale plant with a capacity of about 300,000 to 600,000 tons of product per year. Input coils 101a to 101c unwound from a unwinding device 2 are joined together by a joining device 5, a buildup coil 102 having an outside diameter of not more than cp3000 is formed at a winding/unwinding device 6, and the buildup coil 102 is subjected to reversible cold rolling a predetermined number of times by a cold rolling mill 1 between winding/unwinding devices 3 and 4 until a desired product strip thickness is reached. In the final pass, while being rolled at a slow speed for example, 2 mpm by the cold rolling mill 1, the buildup coil 102 is cut up by a cutting device 7a or 7b, thereby forming a plurality of output coils 103a to 103c, which are extracted from the winding/unwinding device 3 and carried out.

No. of Pages : 136 No. of Claims : 24

(12) PATENT APPLICATION PUBLICATION
(19) INDIA
(22) Date of filing of Application :23/03/2012
(21) Application No.2553/DELNP/2012 A
(43) Publication Date : 28/08/2015

(54) Title of the invention : HERBICIDE-TOLERANT PLANTS

(51) International classification :A01N
(31) Priority Document No :61/238,906
(32) Priority Date :01/09/2009
(33) Name of priority country :U.S.A.
(86) International Application No :PCT/US2010/047575
Filing Date :01/09/2010
(87) International Publication No : NA
(61) Patent of Addition to Application Number :NA
Filing Date :NA
(62) Divisional to Application Number :NA
Filing Date :NA

(71)**Name of Applicant :**
1)BASF AGROCHEMICAL PRODUCTS.B.V.
Address of Applicant :Groningensingel 1 NL-6835 EA Amhem Netherlands. Netherlands
(72)**Name of Inventor :**
1)MANKIN Scots L.
2)WENCK Allan R.
3)HONG Haiping

(57) Abstract :
The present invention provides herbicide-tolerant plants. The present invention also provides methods for controlling the growth of weeds by applying an herbicide to which herbicide-tolerant plants of the invention are tolerant. Plants of the invention may express an acetyl-Coenzyme A carboxylase enzyme that is tolerant to the action of acetyl-Coenzyme A carboxylase enzyme inhibitors.

No. of Pages : 161 No. of Claims : 26

(12) PATENT APPLICATION PUBLICATION
(19) INDIA
(22) Date of filing of Application :23/03/2012
(21) Application No.2554/DELNP/2012 A
(43) Publication Date : 28/08/2015

(54) Title of the invention : METHOD AND APPARATUS FOR MARINE SOURCE DIAGNOSTICS AND GUI FOR OPERATING SAME •

(51) International classification :A61K
(31) Priority Document No :10/368,325
(32) Priority Date :18/02/2002
(33) Name of priority country :U.S.A.
(86) International Application No :PCT/US2003/007820
Filing Date :14/03/2003
(87) International Publication No : NA
(61) Patent of Addition to Application Number :NA
Filing Date :NA
(62) Divisional to Application Number :2653/DELNP/2004
Filed on :09/09/2004

(71)**Name of Applicant :**
1)INPUT/OUTPUT INC.
Address of Applicant :12300 Parc Crest Drive Stafford TX 77477 United States of America U.S.A.
(72)**Name of Inventor :**
1)CLAYTON David A.
2)KUTTY Shyam S.

(57) Abstract :
A graphical user interface (GUI) and control system (102) for controlling and testing an acoustic source (14). The control system includes real-time data processing (124) of individual source near-field measured signatures and synthesis of array far-field signatures. The control system (102) determines individual source out-of-specification conditions and computes far-field signatures based on an array configuration and when applicable excluding failed sources. Source array and troubleshooting information are presented to a user in real-time over a GUI monitor (126) to allow informed decision-making regarding continued and/or modified survey operations and operational parameters.

No. of Pages : 33 No. of Claims : 16

(12) PATENT APPLICATION PUBLICATION
(21) Application No.2555/DELNP/2012 A
(19) INDIA
(22) Date of filing of Application :23/03/2012
(43) Publication Date : 28/08/2015

(54) Title of the invention : ESTROGEN RECEPTOR LIGANDS

(51) International classification :C07D 207/32
(31) Priority Document No :0917575.3
(32) Priority Date :07/10/2009
(33) Name of priority country :U.K.
(86) International Application No :PCT/EP2010/064939
Filing Date :06/10/2010
(87) International Publication No :WO 2011/042473
(61) Patent of Addition to Application Number :NA
Filing Date :NA
(62) Divisional to Application Number :NA
Filing Date :NA

(71)**Name of Applicant :**
1)KARO BIO AB
Address of Applicant :NOVUM, S-141 57 HUDDINGE, SWEDEN Sweden
(72)**Name of Inventor :**
1)WENNERSTAL, MATTIAS
2)RHONNSTAD, PATRIK
3)CHENG, AIPING
4)GORDON, SANDRA
5)APELQVIST, THERESA
6)HAGBERG, LARS

(57) Abstract :
The invention provides a compound of formula (I) or a pharmaceutically acceptable ester, amide, solvate or salt thereof, including a salt of such an ester or amide, and a solvate of such an ester, amide or salt. The invention also provides the use of such compounds in the treatment or prophylaxis of a condition associated with a disease or disorder associated with estrogen receptor activity. Formula (I) wherein R1, R2, R3, R4, R5, R6, R7, R8, R9 and R10 are as defined in the specification.

No. of Pages : 46 No. of Claims : 17

(12) PATENT APPLICATION PUBLICATION
(19) INDIA
(22) Date of filing of Application :02/05/2012
(21) Application No.3844/DELNP/2012 A
(43) Publication Date : 28/08/2015

(54) Title of the invention : ALPHA ADRENERGIC RECEPTOR MODULATORS

(51) International classification :C07D 207/22
(31) Priority Document No :61/253,654
(32) Priority Date :21/10/2009
(33) Name of priority country :U.S.A.
(86) International Application No :PCT/US2010/053327
Filing Date :20/10/2010
(87) International Publication No :WO 2011/050030
(61) Patent of Addition to Application Number :NA
Filing Date :NA
(62) Divisional to Application Number :NA
Filing Date :NA

(71)**Name of Applicant :**
1)ALLERGAN INC.
Address of Applicant :2525 DUPONT DRIVE, T2-7H, IRVINE, CA 92612, UNITED STATES OF AMERICA U.S.A.
(72)**Name of Inventor :**
1)KEN CHOW
2)LIMING WANG
3)WENKUI K. FANG
4)EVELYN G. CORPUZ
5)DANIEL W. GIL

(57) Abstract :
Compounds are described herein useful for treating diseases and conditions by modulation of one or more alpha adrenergic receptor, in particular the alpha 2C receptor. The compounds can include N-(2,3-substituted phenyl)-3,4-dihydro-2H-pyrrol-5-amine derivatives. Methods of making, using and formulating these compounds are described.

No. of Pages : 25 No. of Claims : 12

(12) PATENT APPLICATION PUBLICATION
(21) Application No.3845/DELNP/2012 A
(19) INDIA
(22) Date of filing of Application :02/05/2012
(43) Publication Date : 28/08/2015

(54) Title of the invention : FE-BASED METAL PLATE AND METHOD OF MANUFACTURING THE SAME

(51) International classification :C22C 38/00
(31) Priority Document No :2009-248057
(32) Priority Date :28/10/2009
(33) Name of priority country :Japan
(86) International Application No :PCT/JP2010/069102
Filing Date :27/10/2010
(87) International Publication No :WO 2011/052654
(61) Patent of Addition to Application Number :NA
Filing Date :NA
(62) Divisional to Application Number :NA
Filing Date :NA

(71)**Name of Applicant :**
1)NIPPON STEEL & SUMITOMO METAL CORPORATION,
Address of Applicant :6-1, MARUNOUCHI 2-CHOME, CHIYODA-KU, TOKYO 100-8071, JAPAN, Japan
(72)**Name of Inventor :**
1)TOORU INAGUMA
2)MIHO TOMITA
3)YOUJI MIZUHARA
4)HIROAKI SAKAMOTO

(57) Abstract :
On at least one surface of a base metal plate (1) of an α-γ transforming Fe or Fe alloy, a metal layer (2) containing ferrite former is formed. Next, the base metal plate (1) and the metal layer (2) are heated to an A3 point of the Fe or the Fe alloy, whereby the ferrite former are diffused into the base metal plate (1) to form an alloy region (lb) in a ferrite phase in which an accumulation degree of {200} planes is 25% or more and an accumulation degree of {222} planes is 40% or less. Next, the base metal plate (1) is heated to a temperature higher than the A3 point of the Fe or the Fe alloy, whereby the accumulation degree of the {200} planes is increased and the accumulation degree of the {222} planes is decreased while the alloy region (11b) is maintained in the ferrite phase.

No. of Pages : 137 No. of Claims : 20

(12) PATENT APPLICATION PUBLICATION
(19) INDIA
(22) Date of filing of Application :02/05/2012
(21) Application No.3846/DELNP/2012 A
(43) Publication Date : 28/08/2015

(54) Title of the invention : 4-SUBSTITUTED-2-PHENOXY-PHENYLAMINE DELTA OPIOID RECEPTOR MODULATORS

(51) International classification :C07D 205/04
(31) Priority Document No :61/256,412
(32) Priority Date :30/10/2009
(33) Name of priority country :U.S.A.
(86) International Application No :PCT/US2010/054497
Filing Date :28/10/2010
(87) International Publication No :WO 2011/053706
(61) Patent of Addition to Application Number :NA
Filing Date :NA
(62) Divisional to Application Number :NA
Filing Date :NA

(71)**Name of Applicant :**
1)JANSSEN PHARMACEUTICA NV
Address of Applicant :TURNHOUTSEWEG 30, B-2340 BEERSE, BELGIUM Belgium
(72)**Name of Inventor :**
1)STEVEN J. COATS
2)HAIYAN BIAN
3)CHAOZHONG CAI
4)BART L. DECORTE
5)LI LIU
6)MARK J. MACIELAG
7)SCOTT L. DAX
8)PHILIP M. PITIS
9)PETER J. CONNOLLY
10)WEI HE

(57) Abstract :
Disclosed are compounds, compositions and methods for treating various diseases, syndromes, conditions and disorders, including pain. Such compounds are represented by Formula I as follows: Formula I wherein R1, R2, R3, Ra, and Y are defined herein.

No. of Pages : 111 No. of Claims : 24

(12) PATENT APPLICATION PUBLICATION
(19) INDIA
(22) Date of filing of Application :23/03/2012
(21) Application No.2565/DELNP/2012 A
(43) Publication Date : 28/08/2015

(54) Title of the invention : PROFILE ELEMENT AND METHOD FOR MANUFACTURING A PROFILE ELEMENT

(51) International classification :E04C 3/08
(31) Priority Document No :102009047958.9
(32) Priority Date :01/10/2009
(33) Name of priority country :Germany
(86) International Application No :PCT/EP2010/005834
Filing Date :23/09/2010
(87) International Publication No :WO 2011/038860
(61) Patent of Addition to Application Number :NA
Filing Date :NA
(62) Divisional to Application Number :NA
Filing Date :NA

(71)**Name of Applicant :**
1)PROTEKTORWERK FLORENZ MAISCH GMBH & CO. KG
Address of Applicant :VIKTORIASTRAE 58, 76571 GAGGENAU, GERMANY Germany
(72)**Name of Inventor :**
1)MAISCH, CHRISTOF

(57) Abstract :
A profile element (1) is described, in particular a construction profile, for example, a dry construction profile, a profile for facades or a rendering profile, a screed profile, a tiling profile or cable support profile, having an elongate profile body (2), in particular consisting of metal or plastics material, in which a plurality of openings are formed. The profile body (2) comprises at least two separately formed longitudinal portions (10, 11), each of which comprises a meandering longitudinal edge (12, 13). The longitudinal portions (10, 11) have overlapping regions (28, 29), which are bounded in some regions by the meandering longitudinal edges (12, 13). Connecting means (16, 17; 30, 31; 37, 40) formed in the overlapping regions (28, 29) are used to plug together the longitudinal portions (10, 11) in a direction transverse to the longitudinal extension thereof. The openings (5) are formed between portions (24, 25) of the meandering longitudinal edges (12, 13) of the two longitudinal portions (10, 11). Furthermore, a method is described for manufacturing a corresponding profile element (1).

Fig.1

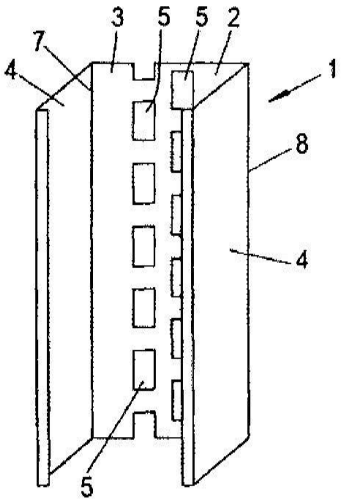

No. of Pages : 35 No. of Claims : 16

(12) PATENT APPLICATION PUBLICATION
(19) INDIA
(22) Date of filing of Application :23/03/2012
(21) Application No.2566/DELNP/2012 A
(43) Publication Date : 28/08/2015

(54) Title of the invention : VARIABLE COIL CONFIGURATION SYSTEM, APPARATUS AND METHOD

(51) International classification :H02P 27/02
(31) Priority Document No :61/239,769
(32) Priority Date :03/09/2009
(33) Name of priority country :U.S.A.
(86) International Application No :PCT/US2010/047750
Filing Date :02/09/2010
(87) International Publication No :WO 2011/028959
(61) Patent of Addition to Application Number :NA
Filing Date :NA
(62) Divisional to Application Number :NA
Filing Date :NA

(71)**Name of Applicant :**
1)EXRO TECHNOLOGIES INC.
Address of Applicant :200 - 1847 MARINE DRIVE, WEST VANCOUVER, BRITISH COLUMBIA V7V 1J7, CANADA Canada
(72)**Name of Inventor :**
1)RITCHEY, JONATHAN, GALE
2)BURTON, MITCHELL, GORDON
3)BIFFARD, RYAN

(57) Abstract :
One or more variable configuration controller (VCC) systems may produce various combinations of series or parallel couplings of coils, winding or inductive elements of an electric machine such as a generator and/or electric motor. The VCC systems include a plurality of bridge rectifiers, and a first number of switches operated to selectively couple respective pairs of coils in series from parallel on an AC side of the bridge rectifiers. The bridge rectifiers provide for automatic electrical isolation of coils on occurrence of open circuit, low voltage or short circuit conditions. A second number of switches with different performance characteristics (e.g., speed, loss) than the first number of switches may be coupled in parallel with respective ones of the first number of switches. Power factor correction may be used.

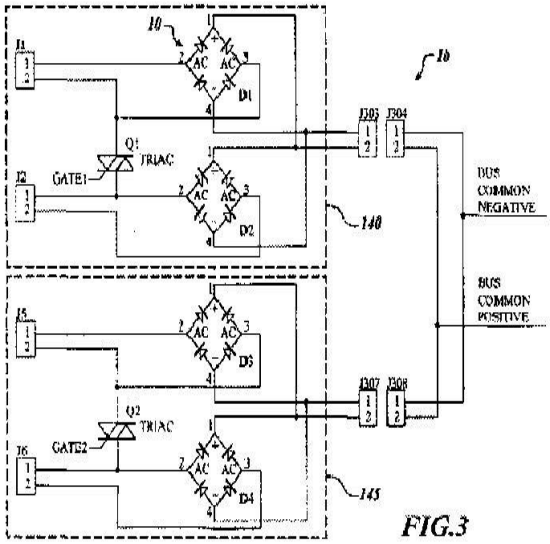

FIG.3

No. of Pages : 52 No. of Claims : 27

(12) PATENT APPLICATION PUBLICATION
(21) Application No.3862/DELNP/2012 A
(19) INDIA
(22) Date of filing of Application :02/05/2012
(43) Publication Date : 28/08/2015

(54) Title of the invention : ABSORBENT ARTICLES AND METHOD FOR MANUFACTURING THE SAME

(51) International classification :A61F 13/15
(31) Priority Document No :12/624,851
(32) Priority Date :24/11/2009
(33) Name of priority country :U.S.A.
(86) International Application No :PCT/US2010/056795
Filing Date :16/11/2010
(87) International Publication No :WO 2011/066135
(61) Patent of Addition to Application Number :NA
Filing Date :NA
(62) Divisional to Application Number :NA
Filing Date :NA

(71)**Name of Applicant :**
1)THE PROCTER & GAMBLE COMPANY
Address of Applicant :ONE PROCTER & GAMBLE PLAZA, CINCINNATI, OHIO 45202, U.S.A. U.S.A.
(72)**Name of Inventor :**
1)SCHNEIDER UWE
2)HENRICH THOMAS

(57) Abstract :
An absorbent product comprises a backsheet having a first lateral end edge, a second lateral end edge, a first longitudinal side edge, and a second longitudinal side edge. The absorbent product further comprises a first longitudinal line of weakness laterally inboard of the first longitudinal side edge, a second longitudinal line of weakness laterally inboard of the second longitudinal side edge, a first lateral line of weakness longitudinally inboard of the first lateral end edge, and a second lateral line of weakness longitudinally inboard of the second lateral end edge. The absorbent product also comprises a topsheet connected with the backsheet, an absorbent article, the absorbent article having an outer perimeter defined by the first and second longitudinal lines of weakness and the first and second lateral lines of weakness, and removable trim region (s). The product is sealed about its outer perimeter, to maintain ists inner surface in a sanitary condition prior to use. Before to use the removable trim region (s) are removed from the absorbent article about the various lines of weakness, and discarded.

No. of Pages : 32 No. of Claims : 10

(12) PATENT APPLICATION PUBLICATION
(21) Application No.3863/DELNP/2012 A
(19) INDIA
(22) Date of filing of Application :02/05/2012
(43) Publication Date : 28/08/2015

(54) Title of the invention : PHOTOVOLTAIC CELL CONDUCTOR CONSISTING OF TWO, HIGH-TEMPERATURE AND LOW-TEMPERATURE, SCREEN-PRINTED PARTS

(51) International classification :H01L 31/0224
(31) Priority Document No :09 57870
(32) Priority Date :06/11/2009
(33) Name of priority country :France
(86) International Application No :PCT/EP2010/066863
Filing Date :05/11/2010
(87) International Publication No :WO 2011/054915
(61) Patent of Addition to Application Number :NA
Filing Date :NA
(62) Divisional to Application Number :NA
Filing Date :NA

(71)**Name of Applicant :**
1)COMMISSARIAT A L'ENERGIE ATOMIQUE ET AUX ENERGIES ALTERNATIVES
Address of Applicant :25 RUE LEBLANC, BATIMENT LE PONANT D, F-75015 PARIS, FRANCE France
(72)**Name of Inventor :**
1)BETTINELLI ARMAND
2)VESCHETTI YANNICK

(57) Abstract :
Method for formation of at least one electrical conductor on a semiconductor material (1), characterized in that it comprises the following steps: (E1) - deposition by serigraphy of a first high-temperature paste; (E2) - deposition by serigraphy of a second low-temperature paste at least partially superposed onto the first high-temperature paste deposited during the preceding step.

No. of Pages : 22 No. of Claims : 16

(12) PATENT APPLICATION PUBLICATION
(21) Application No.10584/DELNP/2014 A
(19) INDIA
(22) Date of filing of Application :11/12/2014
(43) Publication Date : 28/08/2015

(54) Title of the invention : EUGLOBULIN BASED METHOD FOR DETERMINING THE BIOLOGICAL ACTIVITY OF DEFIBROTIDE

(51) International classification :C12Q1/37,C12Q1/56,G01N33/48
(31) Priority Document No :NA
(32) Priority Date :NA
(33) Name of priority country :NA
(86) International Application No :PCT/IT2012/000193
Filing Date :22/06/2012
(87) International Publication No :WO 2013/190582
(61) Patent of Addition to Application Number :NA
Filing Date :NA
(62) Divisional to Application Number :NA
Filing Date :NA

(71)**Name of Applicant :**
1)GENTIUM S.P.A.
Address of Applicant :Piazza XX Settembre 2 I 22079 Villa Guardia (CO) Italy
(72)**Name of Inventor :**
1)IGNONI Terenzio
2)KUMAR Vijay
3)ISLAM Khalid

(57) Abstract :
It is disclosed a method for determining the biological activity of defibrotide which comprises the steps of: a) bringing into contact defibrotide mammalian euglobulin and a substrate specific for the plasmin which by reaction with the plasmin provides a measurable product; and b) measuring the amount of product formed at successive times to thereby determine the biological activity of the defibrotide. Liquid defibrotide formulations are also disclosed preferably water solutions having a defined biological activity and in particular having an activity of 25 to 35 IU/mg of defibrotide preferably from 27.5 to 32.5 IU/mg and more preferably from 28 to 32 IU/mg.

No. of Pages : 24 No. of Claims : 20

(12) PATENT APPLICATION PUBLICATION
(21) Application No.153/DEL/2015 A
(19) INDIA
(22) Date of filing of Application :16/01/2015
(43) Publication Date : 28/08/2015

(54) Title of the invention : YARN WINDING DEVICE

(51) International classification	:b65h	(71)**Name of Applicant :**
(31) Priority Document No	:2014-031989	**1)Murata Machinery, Ltd.** Address of Applicant :3 Minami Ochiai-cho, Kisshoin, Minami-ku, Kyoto-shi, Kyoto 601-8326, Japan Japan
(32) Priority Date	:21/02/2014	(72)**Name of Inventor :**
(33) Name of priority country	:Japan	**1)HIRAI Katsuhisa**
(86) International Application No	:NA	
Filing Date	:NA	
(87) International Publication No	: NA	
(61) Patent of Addition to Application Number	:NA	
Filing Date	:NA	
(62) Divisional to Application Number	:NA	
Filing Date	:NA	

(57) Abstract :
A traverse detection section (70) provided in a yarn winding device (automaticwinder) is arrangedin atraverse region to detect a yarn (21) to be traversed. The traverse detection section (70) includes a light emitting section (72), a reflecting section (74) adapted to reflect light emitted from the light emitting section (72), and a light receiving section (73) adapted to receive the light reflected by the reflecting section (74). The light receiving section (73) and the reflecting section (74) are arranged at positions sandwiching a yarn path, through which the yarn (21) to be traversed passes, and in a region at one end of three regions obtained by equally dividing the traverse region in a package width direction.

No. of Pages : 40 No. of Claims : 17

(12) PATENT APPLICATION PUBLICATION
(19) INDIA
(22) Date of filing of Application :22/03/2012
(21) Application No.2508/DELNP/2012 A
(43) Publication Date : 28/08/2015

(54) Title of the invention : SYTHESIS OF OPTICALLY ACTIVE INTERMEDIATE FOR THE PREPARATION OF MONTELUKAST

(51) International classification	:C07D 215/18
(31) Priority Document No	:09172919.0
(32) Priority Date	:09/10/2009
(33) Name of priority country	:EUROPEAN UNION
(86) International Application No	:PCT/EP2010/064796
Filing Date	:05/10/2010
(87) International Publication No	:WO 2011/042416
(61) Patent of Addition to Application Number	:NA
Filing Date	:NA
(62) Divisional to Application Number	:NA
Filing Date	:NA

(71)**Name of Applicant :**
1)DSM IP ASSETS B.V.
Address of Applicant :HET OVERLOON 1, NL-6411 TE HEERLEN, THE NETHERLANDS, Netherlands
(72)**Name of Inventor :**
1)LEFORT, LAURENT

(57) Abstract :
The present invention relates to the synthesis of optically active alcohols by means of enantioselective hydrogenation of ketones in biphasic systems. In particular the present invention relates to the synthesis of an optically active alcohol of general formula (1).

No. of Pages : 16 No. of Claims : 10

(12) PATENT APPLICATION PUBLICATION
(21) Application No.2509/DELNP/2012 A
(19) INDIA
(22) Date of filing of Application :22/03/2012
(43) Publication Date : 28/08/2015

(54) Title of the invention : PROCESS FOR THE PREPARATION OF A FERMENTATION PRODUCT FROM LIGNOCELLULOSE CONTAINING MATERIAL

(51) International classification	:C12P 7/10	(71)**Name of Applicant :**
(31) Priority Document No	:09172586.1	**1)DSM IP ASSETS B.V.**
(32) Priority Date	:08/10/2009	Address of Applicant :HET OVERLOON 1, NL-6411 TE HEERLEN, THE NETHERLANDS, Netherlands
(33) Name of priority country	:EUROPEAN UNION	(72)**Name of Inventor :**
(86) International Application No	:PCT/EP2010/064830	**1)SMITS, JOHANNES PETRUS**
Filing Date	:05/10/2010	**2)VAN GIERVELD, ELISABETH MAIRA**
(87) International Publication No	:WO 2011/042437	**3)NA**
(61) Patent of Addition to Application Number	:NA	**4)VAN DER HOR, FOP CORNELIS**
Filing Date	:NA	
(62) Divisional to Application Number	:NA	
Filing Date	:NA	

(57) Abstract :
The invention relates to a process for the preparation of a fermentation product from ligno-cellulosic material, comprising the following steps: a) optionally pre-treatment b) optionally washing; c) enzymatic hydrolysis; d) fermentation; and e) optionally recovery of a fermentation product; wherein in step c) an enzyme composition is used that has a temperature optimum of 55 degrees C or more, the hydrolysis time is 40 hours or more and the temperature is 50 degrees C or more.

No. of Pages : 56 No. of Claims : 21

(12) PATENT APPLICATION PUBLICATION
(21) Application No.2581/DELNP/2012 A
(19) INDIA
(22) Date of filing of Application :23/03/2012
(43) Publication Date : 28/08/2015

(54) Title of the invention : SAMPLE PREPARATION DEVICE

(51) International classification :B23B
(31) Priority Document No :0916689.3
(32) Priority Date :23/09/2009
(33) Name of priority country :U.K.
(86) International Application No :PCT/EP2010/063805
Filing Date :20/09/2010
(87) International Publication No : NA
(61) Patent of Addition to Application Number :NA
Filing Date :NA
(62) Divisional to Application Number :NA
Filing Date :NA

(71)**Name of Applicant :**
1)PARTON Adrian
Address of Applicant :Matrix Micro Science Lynx Business Park Fordham Road Newmarket Cambridgeshire CB8 7NY U.K.
(72)**Name of Inventor :**
1)PARTON Adrian

(57) Abstract :
Forward osmosis membranes include an active layer and a thin support layer. A bilayer substrate including a re-movable backing layer may allow forward osmosis membranes with reduced supporting layer thickness to be processed on exist¬ing manufacturing lines.

No. of Pages : 17 No. of Claims : 11

(12) PATENT APPLICATION PUBLICATION
(21) Application No.561/DEL/2014 A
(19) INDIA
(22) Date of filing of Application :27/02/2014
(43) Publication Date : 28/08/2015

(54) Title of the invention : IMPROVED TERMINAL BLOCK STRUCTURE

(51) International classification :H01R12/55
(31) Priority Document No :NA
(32) Priority Date :NA
(33) Name of priority country :NA
(86) International Application No :NA
Filing Date :NA
(87) International Publication No : NA
(61) Patent of Addition to Application Number :NA
Filing Date :NA
(62) Divisional to Application Number :NA
Filing Date :NA

(71)**Name of Applicant :**
1)DINKLE ENTERPRISE CO., LTD.
Address of Applicant :NO.3, MIN AN ROAD, HSIN CHUANG DIST., NEW TAIPEI CITY 242, TAIWAN. Taiwan
(72)**Name of Inventor :**
1)SHANG TSAI WU

(57) Abstract :
The improved terminal block structure comprises a body, a lower terminal base, an upper terminal base, and an elastic component. The lower terminal base is vertically configured in an opening slot of the body, and the lower terminal base comprises a stopper; the upper terminal base vertically slides in the opening slot and vertically slides with respect to the lower terminal base, the orientation of a screw component of the upper terminal base corresponds to a tapped hole of the lower terminal base, and the upper terminal base comprises an another stopper and the orientation of which corresponds to the stopper; and the elastic component is vertically configured in the opening slot and pushing against the body and the upper terminal base from between, and provides an elastic prestress for the upper terminal base to vertically slide with respect to the lower terminal base. Figure 01

No. of Pages : 16 No. of Claims : 5

(12) PATENT APPLICATION PUBLICATION
(21) Application No.2488/DELNP/2012 A
(19) INDIA
(22) Date of filing of Application :22/03/2012
(43) Publication Date : 28/08/2015

(54) Title of the invention : MICROWAVE-RADIOMETRY- DETECTOR AND HEAT-TREATMENT DEVICE COMPRISING SUCH A DETECTOR

(51) International classification :G01K 11/00
(31) Priority Document No :09011660.9
(32) Priority Date :11/09/2009
(33) Name of priority country :EUROPEAN UNION
(86) International Application No :PCT/EP2010/005586
Filing Date :13/09/2010
(87) International Publication No :WO 2011/029613
(61) Patent of Addition to Application Number :NA
Filing Date :NA
(62) Divisional to Application Number :NA
Filing Date :NA

(71)**Name of Applicant :**
1)CFS BAKEL B.V.
Address of Applicant :BEEKAKKER 11, NL-5761 EN BAKEL, THE NETHERLANDS Netherlands
(72)**Name of Inventor :**
1)JOSEPH JOHAN MARIA VAN RENS

(57) Abstract :
The present invention relates to a Microwave-Radiometry-Detector for measuring the core temperature of a piece of protein containing substance, such as meat.

No. of Pages : 18 No. of Claims : 13

(12) PATENT APPLICATION PUBLICATION
(21) Application No.2489/DELNP/2012 A
(19) INDIA
(22) Date of filing of Application :22/03/2012
(43) Publication Date : 28/08/2015

(54) Title of the invention : AUTHENTICATION APPARATUS FOR VALUE DOCUMENTS

(51) International classification :G06K 7/10
(31) Priority Document No :61/244,583
(32) Priority Date :22/09/2009
(33) Name of priority country :U.S.A.
(86) International Application No :PCT/US2010/048203
Filing Date :09/09/2010
(87) International Publication No :WO 2011/037750
(61) Patent of Addition to Application Number :NA
Filing Date :NA
(62) Divisional to Application Number :NA
Filing Date :NA

(71)**Name of Applicant :**
1)HONEY WELL INTERNATIONAL INC.
Address of Applicant :101 COLUMBIA ROAD, MORRISTOWN, NEW JERSEY 07962, UNITED STATES OF AMERICA U.S.A.
(72)**Name of Inventor :**
1)WILLIAM ROSS RAPOPORT
2)KWONG WING AU
3)JAMES KANE
4)CARSTEN LAU

(57) Abstract :
A value document authentication apparatus and system that includes value document substrates having a uniform distribution of one or more phosphors that emit infrared radiation in one or more wavelengths, which can be measured at the same location on the value document that is illuminated by a phosphor exciting light source when the document passes the light source with a uniform velocity. The illumination and measurement locations on the value document can be offset. The measured infrared radiation as a series of overlapped measurements along a pre-selected track in the value document represents an intensity profile, which can be normalized after removing high variations. The normalized intensity profile of a test value document can be compared with normalized intensity profile from valid reference documents to authenticate the test value document.

No. of Pages : 20 No. of Claims : 11

(12) PATENT APPLICATION PUBLICATION
(19) INDIA
(22) Date of filing of Application :23/03/2012
(21) Application No.2558/DELNP/2012 A
(43) Publication Date : 28/08/2015

(54) Title of the invention : IMPROVED BLOCKAGE REMOVAL APPARATUS AND METHOD

(51) International classification :B08B 9/032
(31) Priority Document No :0916887.3
(32) Priority Date :28/09/2009
(33) Name of priority country :U.K.
(86) International Application No :PCT/GB2010/051623
Filing Date :28/09/2010
(87) International Publication No :WO 2011/036502
(61) Patent of Addition to Application Number :NA
Filing Date :NA
(62) Divisional to Application Number :NA
Filing Date :NA

(71)**Name of Applicant :**
1)PARADIGM FLOW SERVICES LIMITED
Address of Applicant :7 QUEENS TERRACE, ABERDEEN AB10 1XL (GB) U.K.
(72)**Name of Inventor :**
1)MACKENZIE, HUGH

(57) Abstract :
The invention provides a method and apparatus for removing a blockage from a fluid conduit. An apparatus comprises a first portion containing a fluid volume separated from the fluid conduit via a controllable valve. The valve is cyclically opened and closed such that a pressure differential between the first portion and the fluid conduit causes a series of pressure pulses in the fluid conduit. The pressure differential is regulated to control the amplitude of the pressure pulses of the series.

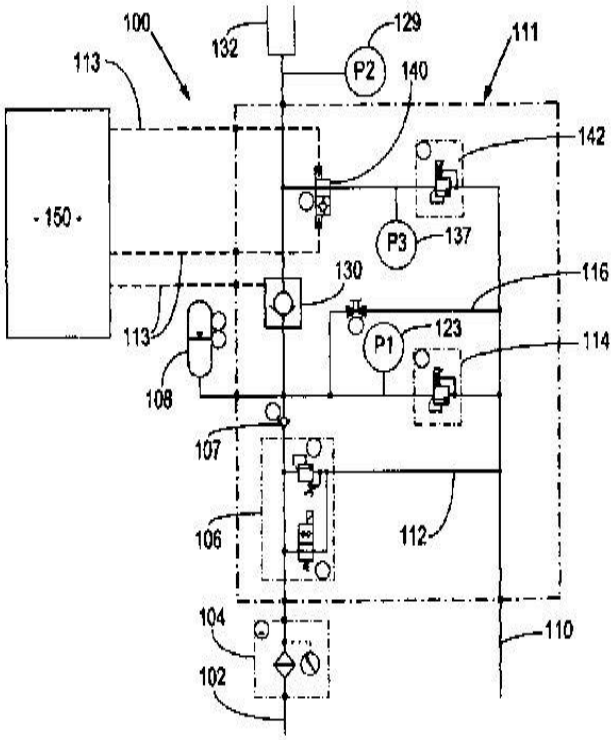

Fig. 2

No. of Pages : 24 No. of Claims : 28

(12) PATENT APPLICATION PUBLICATION
(21) Application No.2559/DELNP/2012 A
(19) INDIA
(22) Date of filing of Application :23/03/2012
(43) Publication Date : 28/08/2015

(54) Title of the invention : METHODS AND DEVICES FOR THE PRODUCTION OF CYANOPYRIDINES

(51) International classification :C07D 213/84
(31) Priority Document No :09013124.4
(32) Priority Date :16/10/2009
(33) Name of priority country :EPO
(86) International Application No :PCT/EP2010/006151
Filing Date :08/10/2010
(87) International Publication No :WO 2011/045003
(61) Patent of Addition to Application Number :NA
Filing Date :NA
(62) Divisional to Application Number :NA
Filing Date :NA

(71)**Name of Applicant :**
1)LONZA LTD
Address of Applicant :LONZASTRASSE 3930 VISP (CH) Switzerland
(72)**Name of Inventor :**
1)ZENKLUSEN, ANTON
2)PIANZOLA, DANIEL

(57) Abstract :
Subject of the invention is a method for the production of a cyanopyridine, comprising the steps of (a) providing a column comprising an absorber section and a stripping section, the absorber section being positioned above the stripping section, such that liquid which passed the absorber section enters the stripping section, (b) feeding a gaseous phase comprising the cyanopyridine into the column, (c) contacting the gaseous phase with an aqueous solution in the absorber section, such that at least a portion of the cyanopyridine is dissolved in the aqueous solution, (d) stripping the aqueous solution obtained from the absorber section in step (c) with a stripping gas in the stripping section, and (e) eluting an aqueous solution comprising the cyanopyridine from the bottom of the column. Another subject of the invention is a device for carrying out the invention.

No. of Pages : 19 No. of Claims : 15

(12) PATENT APPLICATION PUBLICATION
(19) INDIA
(22) Date of filing of Application :21/03/2012
(21) Application No.828/DEL/2012 A
(43) Publication Date : 28/08/2015

(54) Title of the invention : METHOD FOR CONTROLLING THE TRANSLATION OF PREDEFINED RULES AND/OR INCOMING DATA OF A DATA STREAM

(51) International classification :G06M
(31) Priority Document No :EP11164257
(32) Priority Date :29/04/2011
(33) Name of priority country :EPO
(86) International Application No :NA
Filing Date :NA
(87) International Publication No :NA
(61) Patent of Addition to Application Number :NA
Filing Date :NA
(62) Divisional to Application Number :NA
Filing Date :NA

(71)**Name of Applicant :**
1)SIEMENS AKTIENGESELLSCHAFT
Address of Applicant :WITTELSBACHERPLATZ 2 80333, MUNICH, GERMANY Germany
(72)**Name of Inventor :**
1)BASE GERO
2)OERTEL NORBERT

(57) Abstract :
The invention describes a method for controlling the translation of predefined rules (R) and/or incoming data (D) of a data stream, the data of which (D) is described in an XML schema, wherein a conversion of hierarchically arranged elements (W, Kl, EL1, K2, EL2) of the XML schema into a list (L) containing list entries is performed. This is effected in that for an element (W, Kl, K2) which represents a parent compo¬nent in the XML schema, a fact class (FK) is created which for every possible relation¬ship arising from the parent component comprises a fact element (FE) comprising all elements (W, Kl, EL1, K2, EL2) of the path of the relevant relationship of the XML schema, wherein the fact elements (FE) represent the list entries of the fact class (FK). At least one of the fact elements (FE) is assigned property information (El) which represents a processing instruction for the assigned fact element (FE) for the translation of the rules (R) and/or data (D). A translation of the rules (R) is effected in that the elements (W, Kl, EL1, K2, EL2) of the XML schema contained in a path of the relationship are determined from the fact elements (FE) and in accordance with the respective assigned property information (El) are converted into a processing in¬struction that can be processed by a rule machine (RM). Furthermore, a translation of the data (D) of the data stream into a fact class instance (FKI) that can be processed by the rule machine (RM) is effected, in that in accordance with the prop¬erty information assigned to a fact element (FE) a predefined handling of optional elements (W, Kl, EL1, K2, EL2) of the XML schema is effected. Figure 2

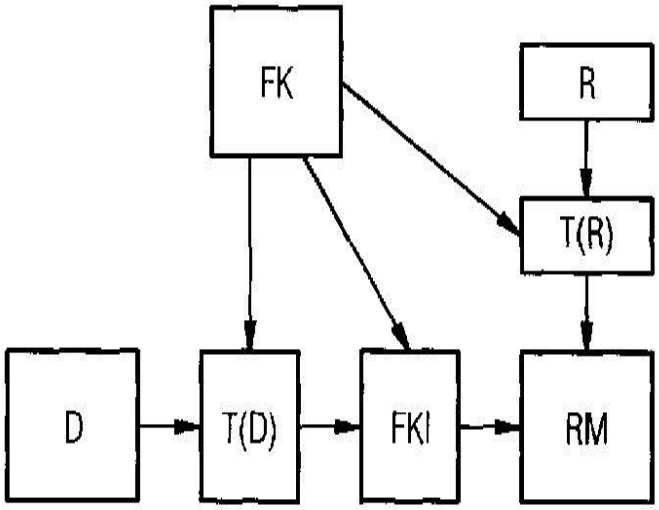

FIG 2

No. of Pages : 16 No. of Claims : 10

(12) PATENT APPLICATION PUBLICATION
(21) Application No.2520/DELNP/2012 A
(19) INDIA
(22) Date of filing of Application :22/03/2012
(43) Publication Date : 28/08/2015

(54) Title of the invention : DATABASE, SLIP DATA MANAGEMENT SERVER, AND INDEX DATA MANAGEMENT PROGRAM

(51) International classification :G06F 17/30
(31) Priority Document No :2010-096974
(32) Priority Date :20/04/2010
(33) Name of priority country :Japan
(86) International Application No :PCT/JP2011/002325
Filing Date :20/04/2011
(87) International Publication No :WO 2011/132420
(61) Patent of Addition to Application Number :NA
Filing Date :NA
(62) Divisional to Application Number :NA
Filing Date :NA

(71)**Name of Applicant :**
1)IPS CO., LTD.
Address of Applicant :20F, HARBORLAND DAIYA NISSEI BLDG., 1-7-4, HIGASHI-KAWASAKI-CHO, CHUO-KU, KOBE-SHI, HYOGO 650-0044, JAPAN Japan
(72)**Name of Inventor :**
1)AKITA TOSHIFUMI

(57) Abstract :
To establish a system capable of readily making an inquiry into progress of a business and the like without carrying out a burdensome retrieving task. [Means for solving the Problems] In a database storing an index table in which index data used for retrieval of slip data that are generated for every business unit in a business process are registered, the index data are data containing a plurality of slip processed data respectively corresponding to the slip data; the slip processed data are data in which a specific item, which contains a predetermined item suitable for grasp of a business process in each business and a key item (for example, slip number) defined in advance in each business; the content of the specific item among items respectively set up to the slip data on various kinds of businesses are associated with each other in unit of slip data; and the index data are stored in the index table in a state where the content of the specific item indicated by each of the plurality of slip processed data corresponding to the slip data can be arranged for every specific item.

No. of Pages : 40 No. of Claims : 5

(12) PATENT APPLICATION PUBLICATION
(21) Application No.2590/DELNP/2012 A
(19) INDIA
(22) Date of filing of Application :23/03/2012
(43) Publication Date : 28/08/2015

(54) Title of the invention : (4-PHENYL-PIPERIDIN-1-YL)-[5-1H-PYRAZOL-4YL)-THIOPHEN-3-YL]-METHANONE COMPOUNDS AND THEIR USE

(51) International classification :C07D 409/14
(31) Priority Document No :61/242,825
(32) Priority Date :16/09/2009
(33) Name of priority country :U.S.A.
(86) International Application No :PCT/GB2010/001732
Filing Date :14/09/2010
(87) International Publication No :WO 2011/033255
(61) Patent of Addition to Application Number :NA
Filing Date :NA
(62) Divisional to Application Number :NA
Filing Date :NA

(71)**Name of Applicant :**
1)THE UNIVERSITY OF EDINBURGH
Address of Applicant :OLD COLLEGE, SOUTH BRIDGE, EDINBURGH EH8 9YL, UNITED KINGDOM U.K.
(72)**Name of Inventor :**
1)WEBSTER, SCOTT PETER
2)SECKL, JONATHAN ROBERT
3)WALKER, BRIAN ROBERT
4)WARD, PETER
5)PALLIN, THOMAS DAVID
6)DYKE, HAZEL JOAN
7)PERRIOR, TREVOR ROBERT

(57) Abstract :
The present invention pertains generally to the field of therapeutic compounds. More specifically the present invention pertains to certain (4-phenyl-piperidin-1-yl)-[5-(1H-pyrazol-4-yl)-thiophen-3-yl]-methanone compounds that, inter alia, inhibit 11-hydroxysteroid dehydrogenase type 1 (11-HSD1). The present invention also pertains to pharmaceutical compositions comprising such compounds, and the use of such compounds and compositions, both in vitro and in vivo, to inhibit 11-hydroxysteroid dehydrogenase type 1; to treat disorders that are ameliorated by the inhibition of 11-hydroxysteroid dehydrogenase type 1; to treat the metabolic syndrome, which includes disorders such as type 2 diabetes and obesity, and associated disorders including insulin resistance, hypertension, lipid disorders and cardiovascular disorders such as ischaemic (coronary) heart disease; to treat CNS disorders such as mild cognitive impairment and early dementia, including Alzheimer's disease; etc.

No. of Pages : 101 No. of Claims : 124

(12) PATENT APPLICATION PUBLICATION
(19) INDIA
(22) Date of filing of Application :23/03/2012
(21) Application No.2591/DELNP/2012 A
(43) Publication Date : 28/08/2015

(54) Title of the invention : METHOD OF PREPARING PLANT-DERIVED PROTEINS

(51) International classification :C07K 1/14
(31) Priority Document No :61/244,786
(32) Priority Date :22/09/2009
(33) Name of priority country :U.S.A.
(86) International Application No :PCT/CA2010/001489
Filing Date :21/09/2010
(87) International Publication No :WO 2011/035423
(61) Patent of Addition to Application Number :NA
Filing Date :NA
(62) Divisional to Application Number :NA
Filing Date :NA

(71)**Name of Applicant :**
1)MEDICAGO INC.
Address of Applicant :1020, ROUTE DE I'EGLISE, SUITE 600, QUEBEC, QUEBEC G1V 3V9 (CA) Canada
(72)**Name of Inventor :**
1)VEZINA, LOUIS-PHILIPPE
2)COUTURE, MANON
3)PAQUET, DANY
4)DARGIS, MICHELE
5)D'AOUST, MARC-ANDRE

(57) Abstract :
Methods of preparing plant-derived proteins or suprastructure proteins, are provided. The . method may comprise obtaining a plant, or plant matter comprising apoplast-localized proteins, or suprastructure proteins, producing a protoplast/spheroplast fraction and apoplast fraction from the plant or plant matter, and recovering the apoplast fraction. The apoplast fraction comprises plant-derived proteins or suprastructure proteins,. Alternatively, the proteins, or suprastructure proteins, may be obtained from plant or plant matter comprising plant-derived proteins or suprastructure proteins, by digesting the plant matter using a cell wall degrading enzyme composition to produced a digested fraction. The digested fraction is filtered to produced a filtered fraction, and the plant-derived proteins or suprastructure proteins, are recovered from the filtered fraction.

No. of Pages : 93 No. of Claims : 26

(12) PATENT APPLICATION PUBLICATION
(21) Application No.834/DEL/2012 A
(19) INDIA
(22) Date of filing of Application :22/03/2012
(43) Publication Date : 28/08/2015

(54) Title of the invention : A PCR METHOD FOR THE DETECTION OF CHLAMYDIA TRACHOMATIS

(51) International classification :C12N
(31) Priority Document No :NA
(32) Priority Date :NA
(33) Name of priority country :NA
(86) International Application No :NA
Filing Date :NA
(87) International Publication No :NA
(61) Patent of Addition to Application Number :NA
Filing Date :NA
(62) Divisional to Application Number :NA
Filing Date :NA

(71)**Name of Applicant :**
1)INDIAN COUNCIL OF MEDICAL RESEARCH
Address of Applicant :V. RAMALINGASWAMI BHAWAN, ANSARI NAGAR, NEW DELHI-110029, INDIA Delhi India
(72)**Name of Inventor :**
1)JAYANTI MANIA PRAMANIK
2)SHILPA CHANDRAKANT KERKAR

(57) Abstract :
This invention relates to a PCR method for the detection of Chlamydia trachomatis.

No. of Pages : 11 No. of Claims : 5

(12) PATENT APPLICATION PUBLICATION
(21) Application No.3822/DELNP/2012 A
(19) INDIA
(22) Date of filing of Application :01/05/2012
(43) Publication Date : 28/08/2015

(54) Title of the invention : METHOD FOR OPERATING A PROCESSOR

(51) International classification :G06F 11/16
(31) Priority Document No :10 2009 054 637.5
(32) Priority Date :15/12/2009
(33) Name of priority country :Germany
(86) International Application No :PCT/EP2010/068720
Filing Date :02/12/2010
(87) International Publication No :WO 2011/082904
(61) Patent of Addition to Application Number :NA
Filing Date :NA
(62) Divisional to Application Number :NA
Filing Date :NA

(71)**Name of Applicant :**
1)ROBERT BOSCH GMBH
Address of Applicant :POSTFACH 30 02 20, 70442 STUTTGART, GERMANY. Germany
(72)**Name of Inventor :**
1)MUELLER, BERND
2)FERCH, MARKUS
3)COLLANI, YORCK
4)BANSKI, HOLGER

(57) Abstract :
The present subject matter relates to method for operating a processor (2) that comprises at least two computation modules (4, 6). A signature register (18, 20) having a plurality of inputs is associated with each of least two of the at least two computation modules (4, 6). In the method, at least one function (12, 14) is carried out by the at least two of the at least two computation modules (4, 6). With each function (8, 10), an algorithm is calculated, wherein results (12, 14) calculated by each computation module (4, 6) are written into the associated signature register (18, 20) and the results (12, 14) written into the signature registers (18,20) are compared.

No. of Pages : 19 No. of Claims : 9

(12) PATENT APPLICATION PUBLICATION
(21) Application No.3823/DELNP/2012 A
(19) INDIA
(22) Date of filing of Application :01/05/2012
(43) Publication Date : 28/08/2015

(54) Title of the invention : METHODS FOR THE PRODUCTION OF RECOMBINANT PROTEINS WITH IMPROVED SECRETION EFFICIENCIES

(51) International classification :C12N 15/74
(31) Priority Document No :61/256,379
(32) Priority Date :30/10/2009
(33) Name of priority country :U.S.A.
(86) International Application No :PCT/US2010/053903
Filing Date :25/10/2010
(87) International Publication No :WO 2011/053541
(61) Patent of Addition to Application Number :NA
Filing Date :NA
(62) Divisional to Application Number :NA
Filing Date :NA

(71)**Name of Applicant :**
1)MERCK SHARP & DOHME CORP.
Address of Applicant :126 EAST LINCOLN AVENUE, RAHWAY, NEW JERSEY 07065-0907, UNITED STATES OF AMERICA U.S.A.
(72)**Name of Inventor :**
1)MEEHL, MICHAEL
2)LIN, HEPING
3)CHOI, BYUNG-KWON

(57) Abstract :
The present invention is related to methods and for producing higher titers of recombinant protein in a modified yeast host cell, for example Pichia pastoris, wherein the modified yeast cell lacks vacuolar sorting activity or has decreased vacuolar sorting activity relative to an unmodified yeast host cell of the same species. In particular embodiments vacuolar sorting activity is reduced or eliminated by deletion or disruption of a gene encoding Vps10 or a Vps10 homolog. The invention is also related to the modified yeast cells which are modified in accordance with the methods disclosed herein.

No. of Pages : 82 No. of Claims : 20

(12) PATENT APPLICATION PUBLICATION
(19) INDIA
(22) Date of filing of Application :01/05/2012
(21) Application No.3824/DELNP/2012 A
(43) Publication Date : 28/08/2015

(54) Title of the invention : AX213 AND AX132 PCSK9 ANTAGONISTS AND VARIANTS

(51) International classification :A61K 39/395
(31) Priority Document No :61/256,732
(32) Priority Date :30/10/2009
(33) Name of priority country :U.S.A.
(86) International Application No :PCT/US2010/054714
Filing Date :29/10/2010
(87) International Publication No :WO 2011/053783
(61) Patent of Addition to Application Number :NA
Filing Date :NA
(62) Divisional to Application Number :NA
Filing Date :NA

(71)**Name of Applicant :**
1)MERCK SHARP & DOHME CORP.
Address of Applicant :126 EAST LINCOLN AVENUE, RAHWAY, NEW JERSEY 07065-0907, UNITED STATES OF AMERICA U.S.A.
(72)**Name of Inventor :**
1)LUO, PETER PEIZHI
2)NI, YAN
3)WANG, KEVIN CAILI
4)HSIEH, MARK
5)WANG, XINWEI
6)DONG, FENG
7)GOLOSOV, ANDREI
8)WANG, WEIRONG
9)LI, YAN
10)ZHONG, PINGYU
11)PETERSON, LAURENCE, B.
12)CUBBON, ROSE
13)SHARMA, SUJATA
14)CONDRA, JON
15)LU, JUN
16)PARTHASARATHY, GOPALAKRISHNAN
17)SOISSON, STEPHEN
18)BYRNE, NOEL

(57) Abstract :
Antagonists of human proprotein convertase subtilisin-kexin type 9 (PCSK9) are disclosed. The disclosed antagonists are effective in the inhibition of PCSK9 function and, accordingly, present desirable antagonists for use in the treatment of conditions associated with PCSK9 activity. The present invention also discloses nucleic acid encoding said antagonists, vectors, host cells, and compositions comprising the antagonists. Methods of making PCSK9-specific antagonists as well as methods of using the antagonists for inhibiting or antagonizing PCSK9 function are also disclosed and form important additional aspects of the present disclosure.

No. of Pages : 283 No. of Claims : 25

(12) PATENT APPLICATION PUBLICATION
(19) INDIA
(22) Date of filing of Application :01/05/2012
(21) Application No.3825/DELNP/2012 A
(43) Publication Date : 28/08/2015

(54) Title of the invention : BETA-GLUCOSIDASE I VARIANTS WITH IMPROVED PROPERTIES

(51) International classification :C12N 9/42
(31) Priority Document No :61/263,240
(32) Priority Date :20/11/2009
(33) Name of priority country :U.S.A.
(86) International Application No :PCT/US2010/057531
Filing Date :19/11/2010
(87) International Publication No :WO 2011/063308
(61) Patent of Addition to Application Number :NA
Filing Date :NA
(62) Divisional to Application Number :NA
Filing Date :NA

(71)**Name of Applicant :**
1)DANISCO US INC.
Address of Applicant :925 PAGE MILL ROAD, PALO ALTO, CALIFORNIA 94304, U.S.A. U.S.A.
(72)**Name of Inventor :**
1)BOTT RICHARD R.
2)KAPER THIJS
3)KELEMEN BRADLEY
4)GOEDEGERBUUR FRITS
5)HOMMES RONALDUS WILHELMUS
6)KRALJ SLAVKO
7)KRUITHOF PAULIEN
8)NIKOLAEV IGOR
9)VAN LIESHOUT JOHAN
10)VAN STIGHT-THANS SANDER
11)VOGTENTANZ GUDRUN
12)SANDGREN MATS

(57) Abstract :
The present disclosure is generally directed to enzymes and in particular beta-glucosidase variants. Also described are nucleic acids encoding beta-glucosidase variants, compositions comprising beta-glucosidase variants, methods of using beta-glucosidase variants, and methods of identifying additional useful beta-glucosidase variants.

No. of Pages : 449 No. of Claims : 108

(12) PATENT APPLICATION PUBLICATION
(21) Application No.554/DEL/2014 A
(19) INDIA
(22) Date of filing of Application :27/02/2014
(43) Publication Date : 28/08/2015

(54) Title of the invention : 6-ARYL-3-PHENYLAMINO-QUINAZOLINE ANALOGS AS PHOSPHOINOSITIDE-3-KINASE INHIBITORS

(51) International classification :H01Q
(31) Priority Document No :NA
(32) Priority Date :NA
(33) Name of priority country :NA
(86) International Application No :NA
Filing Date :NA
(87) International Publication No : NA
(61) Patent of Addition to Application Number :NA
Filing Date :NA
(62) Divisional to Application Number :NA
Filing Date :NA

(71)**Name of Applicant :**
1)CSIR
Address of Applicant :ANUSANDHAN BHAWAN, RAFI MARG, NEW DELHI - 110001, INDIA. Delhi India
(72)**Name of Inventor :**
1)VISHWAKARMA RAM ASREY
2)BHARATE SANDIP BIBISHAN
3)BHUSHAN SHASHI
4)YADAV RAMMOHAN RAO
5)GURU SANTOSH KUMAR
6)JOSHI PRASHANT

(57) Abstract :
The present invention relates to 6-aryl-4-phenylamino quinazolines of formula I wherein, R and R are as herein described. The present invention particularly relates to synthesis and anticancer and phoshpoinositide-3-kinase-a (PI3K-a) inhibitory activity. In addition, the invention relates to methods of using compounds for treating or preventing various cancers such as pancreatic, prostate, breast and melanoma.

No. of Pages : 39 No. of Claims : 14

(12) PATENT APPLICATION PUBLICATION
(21) Application No.838/DEL/2012 A
(19) INDIA
(22) Date of filing of Application :22/03/2012
(43) Publication Date : 28/08/2015

(54) Title of the invention : NOVEL METHOD OF TREATMENT OF EAF DUST FOR RECOVERY OF ENRICHED ZINC OXIDE POWDER

(51) International classification :C07C
(31) Priority Document No :NA
(32) Priority Date :NA
(33) Name of priority country :NA
(86) International Application No :NA
Filing Date :NA
(87) International Publication No :NA
(61) Patent of Addition to Application Number :NA
Filing Date :NA
(62) Divisional to Application Number :NA
Filing Date :NA

(71)**Name of Applicant :**
1)JINDAL STAINLESS LIMITED
Address of Applicant :O.P. JINDAL MARG, HISAR, HARYANA-125005, INDIA Haryana India
(72)**Name of Inventor :**
1)SINGHAL LOKESH KUMAR
2)BHANJA AMRITRAJ

(57) Abstract :
A method for selective recovery of enriched zinc oxide from submerged arc furnace dust which includes collection of zinc oxide dust from bag-house of electric arc furnace, briquetting of the dust, use of the briquettes in a submerged arc furnace for metal recovery, collection of a superior zinc oxide dust from submerged arc furnace bag-house filters, washing with hot water, filtered and dried in an oven to get an enriched saleable zinc oxide powder with a zinc oxide content (>75%) much superior to Waelz Oxide powder produced by the famous Waelz technology and also having a reduced halide and iron content.

No. of Pages : 6 No. of Claims : 8

(12) PATENT APPLICATION PUBLICATION
(21) Application No.2587/DELNP/2012 A
(19) INDIA
(22) Date of filing of Application :23/03/2012
(43) Publication Date : 28/08/2015

(54) Title of the invention : 'COMPOSITION, METHOD AND KIT FOR DETECTING BACTERIA BY MEANS OF SEQUENCING'

(51) International classification :C12Q 1/68
(31) Priority Document No :NA
(32) Priority Date :NA
(33) Name of priority country :NA
(86) International Application No :PCT/ES2009/000507
Filing Date :22/10/2009
(87) International Publication No :WO 2011/048227
(61) Patent of Addition to Application Number :NA
Filing Date :NA
(62) Divisional to Application Number :NA
Filing Date :NA

(71)**Name of Applicant :**
1)BIOTOOLS BIOTECHNOLOGICAL & MEDICAL LABORATORIES, S.A.
Address of Applicant :VALLE DE TOBALINA, 52-43 E-28021 MADRID, SPAIN Spain
(72)**Name of Inventor :**
1)MINGORANCE CRUZ, JESUS
2)CASTAN GARCIA, PABLO
3)FRANCO DE SARABIA ROSADO, PEDRO MANUEL

(57) Abstract :
The present invention describes a method for detecting the presence and type of a microorganism present in a sample by means of stabilization and sequencing techniques and subsequent analysis of microsequences in genes encoding the ribosomal RNA most conserved, and on specific areas of the 16-S region with taxonomic value

No. of Pages : 54 No. of Claims : 10

(12) PATENT APPLICATION PUBLICATION
(21) Application No.282/DEL/2015 A
(19) INDIA
(22) Date of filing of Application :30/01/2015
(43) Publication Date : 28/08/2015

(54) Title of the invention : CENTRIFUGE AND METHOD OF LOADING A CENTRIFUGE

(51) International classification	:B04B5/04	(71)**Name of Applicant :**
(31) Priority Document No	:14156830.3	**1)FERRUM AG**
(32) Priority Date	:26/02/2014	Address of Applicant :Bahnstrasse 18, 5102 Rupperswil, Switzerland Switzerland
(33) Name of priority country	:EUROPEAN UNION	(72)**Name of Inventor :**
(86) International Application No	:NA	**1)DANIEL MEIER**
Filing Date	:NA	
(87) International Publication No	: NA	
(61) Patent of Addition to Application Number	:NA	
Filing Date	:NA	
(62) Divisional to Application Number	:NA	
Filing Date	:NA	

(57) Abstract :
The invention relates to a centrifuge (1), in particular to a double-action pusher centrifuge (1), or to a single-stage or multistage pusher centrifuge (1), comprising a screen drum (3) which is rotatable about an axis of rotation (2) for separating a mixture (4) into a solid cake (5) and into a liquid phase (6), and a pusher base apparatus (8) which is arranged in the screen drum (3) and which is arranged movable to and fro alternately in a first pushing direction (S1) and a second pushing direction (S2) along the axis of rotation (2) so that the solid cake (5) can be alternately displaced along the axis of rotation (2). The mixture (4) can be introduced into a first empty space (1101) or into a second empty space (1102) by means of a feed device (1000), which first empty space (1101) can be established on a displacement of the solid cake (5) by the pusher base apparatus (8) in the first pushing direction (S1) and the second empty space (1102) can be established on a displacement of the solid cake (5) by the pusher base apparatus (8) in the pushing direction (S2) opposite to the first pushing direction (S1). In accordance with the invention, the feed device (1000) comprises a feed redirection control (1020) and a mixture supply (1010) such that the mixture (4) can be supplied by means of the feed redirection control (1020) via the mixture supply (1010) to the first empty space (1101) or to the second empty space (1102) in accordance with a predefinable scheme. The invention furthermore relates to a method of loading a double-action pusher centrifuge (1) with a mixture (4) or with a washing fluid (F).

No. of Pages : 42 No. of Claims : 15

(12) PATENT APPLICATION PUBLICATION
(21) Application No.847/DEL/2012 A
(19) INDIA
(22) Date of filing of Application :22/03/2012
(43) Publication Date : 28/08/2015

(54) Title of the invention : STEAM TURBINE STATOR VANE AND STEAM TURBINE USING THE SAME

(51) International classification	:B23B	(71)**Name of Applicant :**
(31) Priority Document No	:NA	**1)HITACHI, LTD.**
(32) Priority Date	:NA	Address of Applicant :6-6, MARUNOUCHI 1-CHOME, CHIYODA-KU, TOKYO, JAPAN Japan
(33) Name of priority country	:NA	
(86) International Application No	:NA	(72)**Name of Inventor :**
Filing Date	:NA	**1)ONO HIDEKI**
(87) International Publication No	:NA	**2)MURATA KENICHI**
(61) Patent of Addition to Application Number	:NA	**3)SENOO SHIGEKI**
Filing Date	:NA	**4)LEE GOINGWON**
(62) Divisional to Application Number	:NA	
Filing Date	:NA	

(57) Abstract :
It is possible to suppress a profile loss of a moving blade due to radial flow without an increase in the length of a shaft of a turbine, easily set the degree of reaction on an inner circumferential side to an appropriate degree, reduce a profile loss due to supersonic inflow, and improve the turbine efficiency. A steam turbine stator vane has a trailing edge curved line on which an inflection point is provided when the stator vane is viewed from a downstream side of flow of a working fluid in an axial direction of a steam turbine. The stator vane is formed so that a projecting amount of the curved line in a rotational direction of the moving blade of the steam turbine continuously increases from a root portion of the stator vane to a tip portion of the stator vane. The tip portion of the stator vane is inclined toward the outer circumferential side of the steam turbine with respect to the flow direction of the working fluid from the upstream side to downstream side of the flow of the working fluid. The root portion is inclined toward the inner circumferential side of the steam turbine with respect to the flow direction of the working fluid from the upstream side to downstream side of the flow of the working fluid.

No. of Pages : 51 No. of Claims : 16

(12) PATENT APPLICATION PUBLICATION
(19) INDIA
(22) Date of filing of Application :23/03/2012
(21) Application No.2567/DELNP/2012 A
(43) Publication Date : 28/08/2015

(54) Title of the invention : HARDWARE-BASED SCHEDULING OF GPU WORK

(51) International classification :G06F 9/38
(31) Priority Document No :12/553,637
(32) Priority Date :03/09/2009
(33) Name of priority country :U.S.A.
(86) International Application No :PCT/US2010/047666
Filing Date :02/09/2010
(87) International Publication No :WO 2011/028896
(61) Patent of Addition to Application Number :NA
Filing Date :NA
(62) Divisional to Application Number :NA
Filing Date :NA

(71)**Name of Applicant :**
1)ADVANCED MICRO DEVICES, INC.
Address of Applicant :ONE AMD PLACE, SUNNYVALE, CALIFORNIA 94088 UNITED STATES OF AMERICA U.S.A.
(72)**Name of Inventor :**
1)MCCRARY, REX
2)LILJEROS, FRANK
3)CHENG, GONGXIAN, JEFFREY

(57) Abstract :
An apparatus and methods for scheduling and executing commands issued by a first processor, such as a CPU, on a second processor, such as a GPU, are disclosed. In one embodiment, a method of executing processes on a graphics processing unit (GPU) includes monitoring one or more buffers in a memory, selecting a first subset from the one or more buffers for execution on the GPU based on a workload profile of the GPU, and executing the first subset on the GPU. The GPU may also receive a priority ordering of the one or more buffers, where the selecting is further based on the received priority ordering. By performing prioritization and scheduling of commands in the GPU, system performance is enhanced.

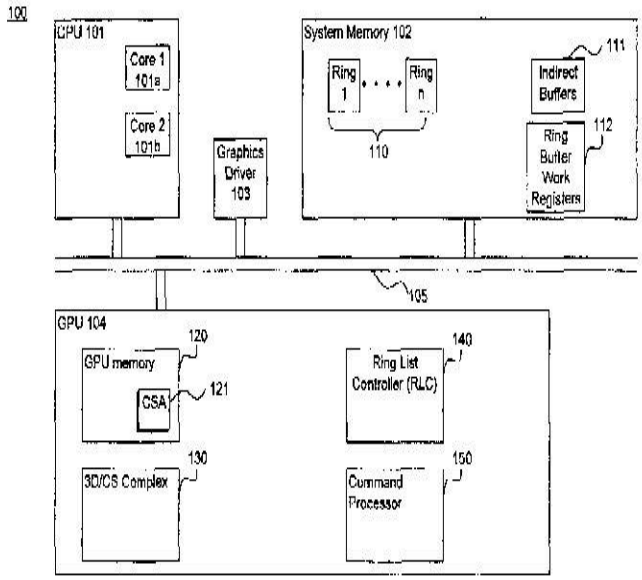

FIG. 1

No. of Pages : 32 No. of Claims : 22

(12) PATENT APPLICATION PUBLICATION
(19) INDIA
(22) Date of filing of Application :23/03/2012
(21) Application No.2568/DELNP/2012 A
(43) Publication Date : 28/08/2015

(54) Title of the invention : AN INTERNAL, PROCESSING-UNIT MEMORY FOR GENERAL-PURPOSE USE

(51) International classification :G06F 9/38
(31) Priority Document No :61/239,730
(32) Priority Date :03/09/2009
(33) Name of priority country :U.S.A.
(86) International Application No :PCT/US2010/047784
Filing Date :03/09/2010
(87) International Publication No :WO 2011/028984
(61) Patent of Addition to Application Number :NA
Filing Date :NA
(62) Divisional to Application Number :NA
Filing Date :NA

(71)**Name of Applicant :**
1)ADVANCED MICRO DEVICES, INC.
Address of Applicant :ONE AMD PLACE, SUNNYVALE, CALIFORNIA 94088 UNITED STATES OF AMERICA U.S.A.
(72)**Name of Inventor :**
1)SADOWSKI, GREG
2)IOURCHA, KONSTANTINE
3)BROTHERS, JOHN

(57) Abstract :
Disclosed herein is a graphics-processing unit (GPU) having an internal memory for general-purpose use and applications thereof. Such a GPU includes a first internal memory, an execution unit coupled to the first internal memory, and an interface configured to couple the first internal memory to a second internal memory of an other processing unit. The first internal memory may comprise a stacked dynamic random access memory (DRAM) or an embedded DRAM. The interface may be further configured to couple the first internal memory to a display device. The GPU may also include another interface configured to couple the first internal memory to a central processing unit. In addition, the GPU may be embodied in software and/or included in a computing system.

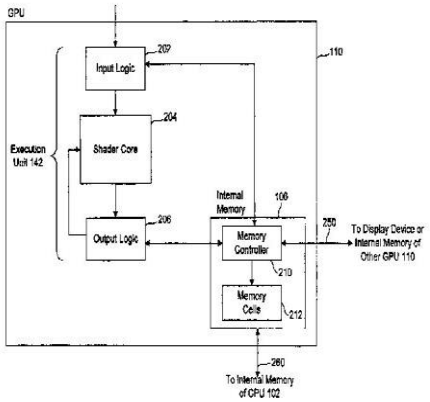

FIG. 2

No. of Pages : 22 No. of Claims : 20

(12) PATENT APPLICATION PUBLICATION
(21) Application No.2569/DELNP/2012 A
(19) INDIA
(22) Date of filing of Application :23/03/2012
(43) Publication Date : 28/08/2015

(54) Title of the invention : PLASTIC SHEETING AND A MOULD THEREFOR

(51) International classification :B29C
(31) Priority Document No :0917308.9
(32) Priority Date :02/10/2009
(33) Name of priority country :U.K.
(86) International Application No :PCT/GB2010/001851
Filing Date :04/10/2010
(87) International Publication No :WO 2011/039520
(61) Patent of Addition to Application Number :NA
Filing Date :NA
(62) Divisional to Application Number :NA
Filing Date :NA

(71)**Name of Applicant :**
1)PLASTIPACK LIMITED
Address of Applicant :WAINWRIGHT HOUSE, 4 WAINWRIGHT CLOSE, CHURCHFIELDS INDUSTRIAL ESTATE, ST LEONARDS-ON-SEA, EAST SUSSEX TN 38 9PP (GB) U.K.
(72)**Name of Inventor :**
1)ADLINGTON, ANTHONY PETER

(57) Abstract :
In a plastic sheeting material incorporating an array of bubble cells (12), the cells are shaped with two chambers (31, 32) connected by a constricted region (34). The chambers (31, 32) are part-spherical e.g. in the form of truncated spheres. The constricted region has concave side walls (37, 38) and/or a concave top wall (36). The sheeting may have two, three or more layers. Moulds (100, 200) for producing the sheeting material have suitably-placed suction holes (104,204).

No. of Pages : 20 No. of Claims : 14

(12) PATENT APPLICATION PUBLICATION
(21) Application No.502/DEL/2014 A
(19) INDIA
(22) Date of filing of Application :21/02/2014
(43) Publication Date : 28/08/2015

(54) Title of the invention : GENERATING DYNAMIC RECOMMENDATIONS IN A DIGITAL TELEVISION ENVIRONMENT

(51) International classification	:H04N	(71)**Name of Applicant :**
(31) Priority Document No	:NA	**1)ALCATEL LUCENT**
(32) Priority Date	:NA	Address of Applicant :3, avenue Octave Grard, 75007 Paris France
(33) Name of priority country	:NA	(72)**Name of Inventor :**
(86) International Application No	:NA	**1)RAJAPANDIYAN, Karthick**
Filing Date	:NA	**2)PANDURANGAN, Harikumar**
(87) International Publication No	: NA	
(61) Patent of Addition to Application Number	:NA	
Filing Date	:NA	
(62) Divisional to Application Number	:NA	
Filing Date	:NA	

(57) Abstract :
Method(s) and system(s) for generating dynamic recommendations in a digital television (DTV) environment (100) are disclosed. The method includes determining occurrence of an activity from a plurality of activities in the DTV environment (100). The DTV environment (100) includes a content viewing device (106). Further, the method includes, generating, based on the determination, a recommendation prompt for the content viewing device (106). The recommendation prompt is generated on the basis of a current activity on the content viewing device (106). The method further includes, performing an action in the DTV environment (100) based on a response to the recommendation prompt.

No. of Pages : 29 No. of Claims : 14

(12) PATENT APPLICATION PUBLICATION
(19) INDIA
(22) Date of filing of Application :23/03/2012
(21) Application No.864/DEL/2012 A
(43) Publication Date : 28/08/2015

(54) Title of the invention : ROVING OPENER MACHINE

(51) International classification :B64D
(31) Priority Document No :NA
(32) Priority Date :NA
(33) Name of priority country :NA
(86) International Application No :NA
Filing Date :NA
(87) International Publication No :NA
(61) Patent of Addition to Application Number :NA
Filing Date :NA
(62) Divisional to Application Number :NA
Filing Date :NA

(71)**Name of Applicant :**
1)ANANT SPINNING MILLS, MANDIDEEP (A UNIT OF VARDHMAN TEXTILES LIMITED)
Address of Applicant :PLOT NO. 1-A, NEW INDUSTRIAL AREA - 1, MANDIDEEP - 462046 DISTT. - RAISEN (M.P.), INDIA. Madhya Pradesh India
(72)**Name of Inventor :**
1)R. S. YADAV

(57) Abstract :
A roving opener machine is described herein. The roving opener machine comprises a bobbin holder frame 106 removably attached to the roving opener machine 100 wherein the bobbin holder frame 106 further comprises a plurality of bobbin holders 128. The plurality of bobbins 104 are removably fixed to the bobbin holders 128 wherein residual roving 102 wrapped on the plurality of bobbins 1J04. The roving opener machine also includes a blowing chamber 108 containing a pneumatic cylinder 126 to store and supply compressed air 124 to at least six blocks 114 via connectors 120. The blocks are provided with a top hole 116 encarved on each block 114 for sucking ends of the residual roving 102 wherein the top holes 116 of the blocks 114 protrude from the top surface of the blowing chamber 108. The blocks 114 are also designed with a first side hole 118 for blowing the compressed air via the connectors 120 to convert the residual roving 102 into individual fiber. Similarly, the blocks are also provided with a second side hole 122 for transferring the individual fiber as roving waste to a storage chamber 110.

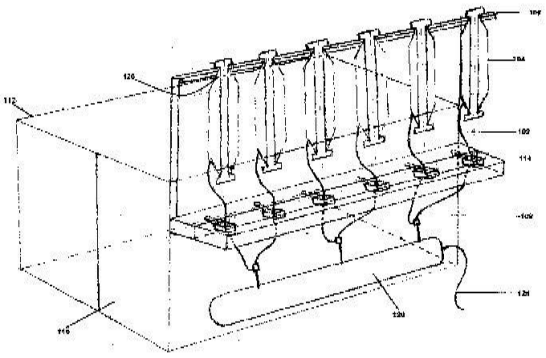

FIG. 1

No. of Pages : 14 No. of Claims : 10

(12) PATENT APPLICATION PUBLICATION
(21) Application No.839/DEL/2012 A
(19) INDIA
(22) Date of filing of Application :22/03/2012
(43) Publication Date : 28/08/2015

(54) Title of the invention : IMAGE PROCESSING APPARATUS, METHOD AND PROGRAM

(51) International classification :G06M
(31) Priority Document No :2011073042
(32) Priority Date :29/03/2011
(33) Name of priority country :Japan
(86) International Application No :NA
Filing Date :NA
(87) International Publication No :NA
(61) Patent of Addition to Application Number :NA
Filing Date :NA
(62) Divisional to Application Number :NA
Filing Date :NA

(71)**Name of Applicant :**
1)SONY CORPORATION
Address of Applicant :1-7-1 KONAN, MINATO-KU, TOKYO, JAPAN Japan
(72)**Name of Inventor :**
1)KAZUKI YOKOYAMA
2)TAKAHIRO SAKAGUCHI
3)MAYUKO MARUYAMA

(57) Abstract :
An image processing apparatus includes a depth control signal generation unit generating a depth control signal controlling emphasis of the feel of each region of an input image based on the depth position of a subject in each region of the input image; a face skin region control signal generation unit generating a face skin region control signal controlling emphasis of the feel of each region in the input image based on the human face skin region in the input image; a person region control signal generation unit generating a person region control signal controlling emphasis of the feel of each region in the input image based on the region of the person in the input image; and a control signal synthesis unit synthesizing the depth control signal, the face skin region control signal, and the person region control signal to generate a control signal.

No. of Pages : 89 No. of Claims : 12

(12) PATENT APPLICATION PUBLICATION
(19) INDIA
(22) Date of filing of Application :23/03/2012
(21) Application No.858/DEL/2012 A
(43) Publication Date : 28/08/2015

(54) Title of the invention : SEALING DEVICE FOR ROTATING TURBINE BLADES

(51) International classification :B23B
(31) Priority Document No :00545/11
(32) Priority Date :25/03/2011
(33) Name of priority country :Switzerland
(86) International Application No :NA
Filing Date :NA
(87) International Publication No :NA
(61) Patent of Addition to Application Number :NA
Filing Date :NA
(62) Divisional to Application Number :NA
Filing Date :NA

(71)**Name of Applicant :**
1)ALSTOM TECHNOLOGY LTD
Address of Applicant :BROWN BOVERI STRASSE 7, 5400 BADEN, SWITZERLAND Switzerland
(72)**Name of Inventor :**
1)SIMONET CHRISTOPHE

(57) Abstract :
An improved seal is described for a turbine which includes successive diaphragms providing an outer support for a radial arrangement of static blades alternatingly arranged in axial direction with radially and axially supported outer seal parts forming part of a seal reducing the flow of fluid around the tip of rotating blades, wherein the radial support of the outer seal part is formed as a ring held in position by keys and an circumferential extension such that the keys and the circumferential extension have sufficient clearance to allow for a relative radial movement between the ring and the casing while proving a pressure sealing face and support in axial direction against the casing and wherein the ring has sufficient clearance from the casing and/or the diaphragms to be essentially isolated from being radially dislocated in the event of a rotational movement of the diaphragms or parts of the casing in axial direction. Fig. 3

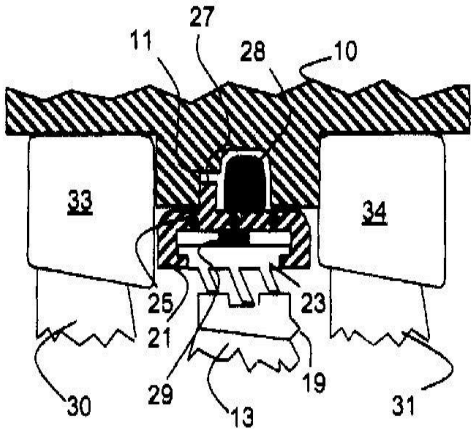

FIG. 3

No. of Pages : 18 No. of Claims : 7

(12) PATENT APPLICATION PUBLICATION
(21) Application No.525/DEL/2014 A
(19) INDIA
(22) Date of filing of Application :25/02/2014
(43) Publication Date : 28/08/2015

(54) Title of the invention : A GLOBAL POSITIONING SYSTEM (GPS) CONFORMAL ANTENNA

(51) International classification :H01Q
(31) Priority Document No :NA
(32) Priority Date :NA
(33) Name of priority country :NA
(86) International Application No :NA
Filing Date :NA
(87) International Publication No : NA
(61) Patent of Addition to Application Number :NA
Filing Date :NA
(62) Divisional to Application Number :NA
Filing Date :NA

(71)**Name of Applicant :**
1)DIRECTOR GENERAL, DEFENCE RESEARCH & DEVELOPMENT ORGANISATION
Address of Applicant :Ministry of Defence, Govt. of India, Room No. 348, B-wing, DRDO Bhawan, Rajaji Marg, New Delhi 110 105 Delhi India
(72)**Name of Inventor :**
1)SELVANAYAKI KULANDAISAMY
2)RAMACHANDRA VULAPALLI

(57) Abstract :
Embodiments of the present disclosure disclose a GPS conformal antenna for providing near isotropic coverage with near circular polarization. The GPS conformal antenna includes plurality of microstrip antenna elements. The plurality of antenna elements is positioned such that there is no space/gap between the antenna elements. By placing the antenna elements in such a manner eliminates the interference induced nulls totally and generates smooth 3600 roll coverage. The closely placed antenna elements are fed with a feed network with equal phase angle excitation. Each of the plurality of antenna elements is provided with two notches which are positioned diagonally opposite to generate circular polarization. Fig.2

No. of Pages : 18 No. of Claims : 9

(12) PATENT APPLICATION PUBLICATION
(21) Application No.840/DEL/2012 A
(19) INDIA
(22) Date of filing of Application :22/03/2012
(43) Publication Date : 28/08/2015

(54) Title of the invention : CONTENT RECOMMENDATION DEVICE, RECOMMENDED CONTENT SEARCH METHOD, AND PROGRAM

(51) International classification :G06M
(31) Priority Document No :2011072324
(32) Priority Date :29/03/2011
(33) Name of priority country :Japan
(86) International Application No :NA
Filing Date :NA
(87) International Publication No :NA
(61) Patent of Addition to Application Number :NA
Filing Date :NA
(62) Divisional to Application Number :NA
Filing Date :NA

(71)**Name of Applicant :**
1)SONY CORPORATION
Address of Applicant :1-7-1 KONAN, MINATO-KU, TOKYO, JAPAN Japan
(72)**Name of Inventor :**
1)NAOKI KAMIMAEDA
2)MASANORI MIYAHARA
3)TOMOHIRO TAKAGI

(57) Abstract :
There is provided a device that generates a first feature based on information of a first type included in first content selected by a target user in past, generates a second feature based on information of a second type included in second content selected by the target user after selecting the first contest, generates a relational feature showing a relationship between the first content and the second content, based on the first feature and the second feature, and searches for content to be recommended to the target user by using the information of the first type included in content newly selected by the target user and the relational feature.

No. of Pages : 101 No. of Claims : 13

(12) PATENT APPLICATION PUBLICATION
(21) Application No.280/DEL/2015 A
(19) INDIA
(22) Date of filing of Application :30/01/2015
(43) Publication Date : 28/08/2015

(54) Title of the invention : CONTINUOUS ANNEALING FURNACE AND METHOD OF ACTIVATING CONTINUOUS ANNEALING FURNA E

(51) International classification	:c21D	(71)**Name of Applicant :**
(31) Priority Document No	:2014-036018	**1)JFE STEEL CORPORATION**
(32) Priority Date	:26/02/2014	Address of Applicant :2-3, Uchisaiwai-cho 2-chome, Chiyoda-ku, Tokyo 100-0011, Japan, Japan
(33) Name of priority country	:Japan	(72)**Name of Inventor :**
(86) International Application No	:NA	**1)SUSUMU KAMIISHI**
Filing Date	:NA	
(87) International Publication No	: NA	
(61) Patent of Addition to Application Number	:NA	
Filing Date	:NA	
(62) Divisional to Application Number	:NA	
Filing Date	:NA	

(57) Abstract :
A continuous annealing furnace includes: a furnace main body including a heat insulating material forming an in-furnace space and continuously annealing steel sheets that are sequentially conveyed into the in-furnace space; and a plurality of gas supply nozzles that are arranged at an interval of not greater than 5 times a thickness of the heat insulating material along a lengthwise direction of the furnace main body, and that are configured to supply nitrogen gas of a volume of not smaller than 0.3 times a total volume of the heat insulating material into the furnace main body per hour.

No. of Pages : 36 No. of Claims : 2

(12) PATENT APPLICATION PUBLICATION
(21) Application No.3852/DELNP/2012 A
(19) INDIA
(22) Date of filing of Application :02/05/2012
(43) Publication Date : 28/08/2015

(54) Title of the invention : BASE FRAME FOR A LIFTING APPARATUS, ESPECIALLY A CABLE TRACTION MECHANISM, AND METHOD FOR MOUNTING, DISMOUNTING, OR MODIFYING THE SAME

(51) International classification	:B66D 3/26	(71)**Name of Applicant :**
(31) Priority Document No	:10 2009 054 225.6	**1)DEMAG CRANES & COMPONENTS GMBH**
(32) Priority Date	:21/11/2009	Address of Applicant :RUHRSTR. 28, 58300 WETTER, GERMANY Germany
(33) Name of priority country	:Germany	
(86) International Application No	:PCT/EP2010/067489	(72)**Name of Inventor :**
Filing Date	:15/11/2010	**1)DINGYON ZHAO**
(87) International Publication No	:WO 2011/061150	**2)WENKE SUI**
(61) Patent of Addition to Application Number	:NA	**3)LIMING WQANG**
Filing Date	:NA	**4)GEREON IMBUSCH**
(62) Divisional to Application Number	:NA	**5)THOMAS KOHLENBERG**
Filing Date	:NA	**6)FRANZ SCHULTE**

(57) Abstract :
The invention relates to a lifting apparatus, especially a cable traction mechanism, comprising a base frame that has at least two base plates, further comprising at least two longitudinal beams which have a first end and an opposite second end and which interconnect the base plates and keep the same apart from each other. The invention also relates to a method for mounting, dismounting, or modifying such a base frame. The aim of the invention is to create a lifting apparatus, especially a cable traction mechanism, and devise a method for mounting, dismounting, or modifying the same which are characterized by a simple design and the ease with which said apparatus can be mounted, dismounted, or modified. Said aim is achieved by detachably fastening the first end (5d) and the second end (5e) of the longitudinal beams (5a, 5b, 5c) to the base plates (4a, 4b) in such a way in an operational state of the lifting apparatus and designing one of the at least two base plates (4a, 4b) in such a way that the longitudinal beams (5a, 5b, 5c) can be inserted or removed in the direction of the longitudinal axis (L) thereof when mounting, dismounting, or modifying the base frame (3).

No. of Pages : 24 No. of Claims : 12

(12) PATENT APPLICATION PUBLICATION
(21) Application No.860/DEL/2012 A
(19) INDIA
(22) Date of filing of Application :23/03/2012
(43) Publication Date : 28/08/2015

(54) Title of the invention : A METHOD OF PREPARING ANTIBACTERIAL NANOCOMPOSITES

(51) International classification :C07C
(31) Priority Document No :NA
(32) Priority Date :NA
(33) Name of priority country :NA
(86) International Application No :NA
Filing Date :NA
(87) International Publication No :NA
(61) Patent of Addition to Application Number :NA
Filing Date :NA
(62) Divisional to Application Number :NA
Filing Date :NA

(71)**Name of Applicant :**
1)DEPARTMENT O BIOTECHNOLOGY
Address of Applicant :BLOCK 2, 7TH FLOOR, CGO COMPLEX, LODHI ROAD, NEW DELHI-110003, INDIA Delhi India
2)G.B. PANT UNIVERSITY OF AGRICULTURE & TECHNOLOGY
(72)**Name of Inventor :**
1)ZAIDI, MOHAMD GHULAM HAIDER;
2)GOEL, REETA;
3)AGARWAL, TITHI;
4)NEGI, HARSHITA;

(57) Abstract :
The present invention relates to a method of preparing antibacterial nanocomposite in supercritical fluids. In particular, the invention involves incorporation of antibacterial nanofillers into polymer matrix through either mixing a vinyl functional monomer, a polymerization initiator ,contacting the mixture with supercritical carbon dioxide and heating at a temperature and time to induce the insitu polymerization or infusing an antibacterial nanofiller into a polymer matrix swollen in supercritical carbon dioxide . The method further involves depressurizing the contents under ambient conditions to isolate the antibacterial nanocomposites. Fig:l

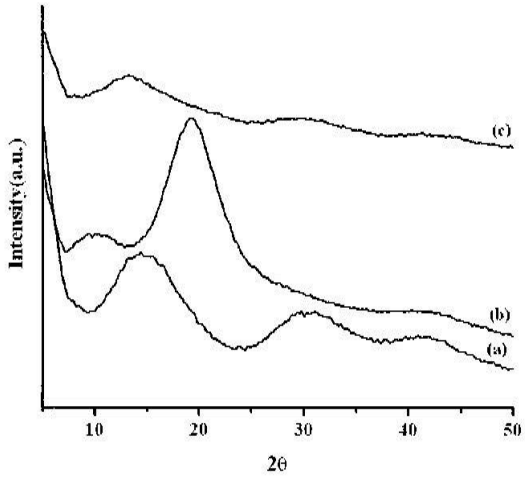

Fig 1

No. of Pages : 39 No. of Claims : 7

(12) PATENT APPLICATION PUBLICATION
(19) INDIA
(22) Date of filing of Application :23/03/2012
(21) Application No.2539/DELNP/2012 A
(43) Publication Date : 28/08/2015

(54) Title of the invention : SEPARATION MATRICES

(51) International classification :B01J 20/289
(31) Priority Document No :0950748-4
(32) Priority Date :12/10/2009
(33) Name of priority country :Sweden
(86) International Application No :PCT/SE2010/051088
Filing Date :08/10/2010
(87) International Publication No :WO 2011/046494
(61) Patent of Addition to Application Number :NA
Filing Date :NA
(62) Divisional to Application Number :NA
Filing Date :NA

(71)**Name of Applicant :**
1)GE HEALTHCARE BIO-SCIENCES AB
Address of Applicant :PATENT DEPARTMENT, BJORKGATAN 30, S-751 84 UPPSALA, SWEDEN Sweden
(72)**Name of Inventor :**
1)ANDREAS AXEN
2)EGGERT BREKKAN
3)GUNILLA EDGREN
4)GUNNAR MALMQUIST

(57) Abstract :
The present invention relates to separation matrices comprising base matrices with first ligands comprising hydrophobic functions covalently bound to said base matrices and with extenders covalently bound to said base matrices, said extenders comprising second ion exchange ligands.

No. of Pages : 22 No. of Claims : 35

(12) PATENT APPLICATION PUBLICATION
(21) Application No.3830/DELNP/2012 A
(19) INDIA
(22) Date of filing of Application :01/05/2012
(43) Publication Date : 28/08/2015

(54) Title of the invention : METHOD AND APPARATUS FOR TREATING EXHAUST GAS

(51) International classification :F23J 15/00
(31) Priority Document No :2009-254872
(32) Priority Date :06/11/2009
(33) Name of priority country :Japan
(86) International Application No :PCT/JP2010/069627
Filing Date :04/11/2010
(87) International Publication No :WO 2011/055759
(61) Patent of Addition to Application Number :NA
Filing Date :NA
(62) Divisional to Application Number :NA
Filing Date :NA

(71)**Name of Applicant :**
1)UBE INDUSTRIES, LTD.
Address of Applicant :1978-96, OAZA KOGUSHI, UBE-SHI, YAMAGUCHI 755-8633, JAPAN. Japan
(72)**Name of Inventor :**
1)TANO TATSUMI
2)KOYAMA YUKIHIRO
3)NAKAMURA TOSHIAKI
4)MURATANI TAKESHI
5)SAIAI KAZUHIRO

(57) Abstract :
An exhaust gas treatment facility (100) comprises a desulfurizing agent supply unit (10), a combustion furnace (20), an exhaust gas temperature lowering unit (30) , and an electric dust collector (40) . The desulfurizing agent supply unit (10) causes desulfurizing agent to be injected into a position in a vicinity of an upper nose section (21) in the combustion furnace (20), via a desulfurizing agent injecting inlet (14) . A configuration may be adopted in which exhaust gas passes a gas duct (22) to be supplied to the exhaust gas temperature lowering unit (30), and, after having its temperature lowered, has dust removed in the electric dust collector (40) to be emitted to the atmosphere from a chimney (4 9).

No. of Pages : 36 No. of Claims : 9

(12) PATENT APPLICATION PUBLICATION
(21) Application No.279/DEL/2015 A
(19) INDIA
(22) Date of filing of Application :30/01/2015
(43) Publication Date : 28/08/2015

(54) Title of the invention : METHOD OF ACTIVATING CONTINUOUS ANNEALING FURNACE •

(51) International classification :c21d
(31) Priority Document No :2014-036021
(32) Priority Date :26/02/2014
(33) Name of priority country :Japan
(86) International Application No :NA
Filing Date :NA
(87) International Publication No : NA
(61) Patent of Addition to Application Number :NA
Filing Date :NA
(62) Divisional to Application Number :NA
Filing Date :NA

(71)**Name of Applicant :**
1)JFE STEEL CORPORATION
Address of Applicant :2-3, Uchisaiwai-cho 2-chome, Chiyoda-ku, Tokyo 1000011, Japan, Japan
(72)**Name of Inventor :**
1)SUSUMU KAMIISHI

(57) Abstract :
A method of activating a continuous annealing furnace includes: supplying nitrogen gas into the continuous annealing furnace after opening of interior of the continuous annealing furnace so as to purge an internal portion of the continuous annealing furnace with the nitrogen gas; supplying mixed gas of hydrogen and nitrogen having a hydrogen concentration not lower than a hydrogen concentration of the mixed atmosphere that is targeted to be formed in an in-furnace space when steel sheets are annealed into the continuous annealing furnace after purged with the nitrogen gas so as to further purge the internal portion of the continuous annealing furnace with the mixed gas supplied; and continuously supplying the mixed gas into the continuous annealing furnace so as to adjust the infurnace space to the mixed atmosphere and adjust a dew point of the mixed atmosphere in the in-furnace space to be not higher than a predetermined value.

No. of Pages : 41 No. of Claims : 2

(12) PATENT APPLICATION PUBLICATION
(21) Application No.528/DEL/2014 A
(19) INDIA
(22) Date of filing of Application :25/02/2014
(43) Publication Date : 28/08/2015

(54) Title of the invention : COORDINATION SYSTEMS AND METHODS BETWEEN DATA CONTROL PLANE AND PHOTONIC CONTROL IN OPTICAL NETWORKS

(51) International classification :F02M
(31) Priority Document No :NA
(32) Priority Date :NA
(33) Name of priority country :NA
(86) International Application No :NA
Filing Date :NA
(87) International Publication No : NA
(61) Patent of Addition to Application Number :NA
Filing Date :NA
(62) Divisional to Application Number :NA
Filing Date :NA

(71)**Name of Applicant :**
1)CIENA CORPORATION
Address of Applicant :7035 RIDGE ROAD HANOVER, MD 21076, U.S.A. U.S.A.
(72)**Name of Inventor :**
1)CHHILLAR, MOHIT
2)PRAKASH, ANURAG
3)KANNAN, RAJAGOPALAN
4)RICHENS, DOMINIC
5)SRINIVASAN, HARI

(57) Abstract :
A method, a system, and a network for coordination between a data control plane and photonic control in a network include operating the data control plane with photonic control messaging included therein, wherein the data control plane is 10 configured to at least establish end-to-end paths between a plurality of network elements at Layer 1; transmitting a photonic control message in or by the data control plane responsive to a requirement for photonic layer information; processing, via the data control plane, the photonic layer information received from photonic control responsive to the photonic control message, wherein the photonic 15 control is configured to adjust photonic hardware responsive to a change at a photonic layer; and performing an action by the data control plane considering the photonic layer information. 28

No. of Pages : 34 No. of Claims : 19

(12) PATENT APPLICATION PUBLICATION
(19) INDIA
(22) Date of filing of Application :22/03/2012

(21) Application No.843/DEL/2012 A
(43) Publication Date : 28/08/2015

(54) Title of the invention : A WIND TURBINE BLADE

(51) International classification :B23B
(31) Priority Document No :PA 2011 70133
(32) Priority Date :22/03/2011
(33) Name of priority country :Denmark
(86) International Application No :NA
Filing Date :NA
(87) International Publication No :NA
(61) Patent of Addition to Application Number :NA
Filing Date :NA
(62) Divisional to Application Number :NA
Filing Date :NA

(71)**Name of Applicant :**
1)ENVISION ENERGY (DENMARK) APS
Address of Applicant :TORVEL 11 2, 8600 SILKEBORG, DENMARK Denmark
(72)**Name of Inventor :**
1)PETER GRABAU

(57) Abstract :
A partial pitch wind turbine blade is described wherein the pitch system of the blade is used as a lightning receptor. As the pitch system is of a relatively large dimension, it is able to dissipate the effects of a lightning strike without damage, and removes the needs for additional blade features normally used to conduct lightning around or away from the pitch system.

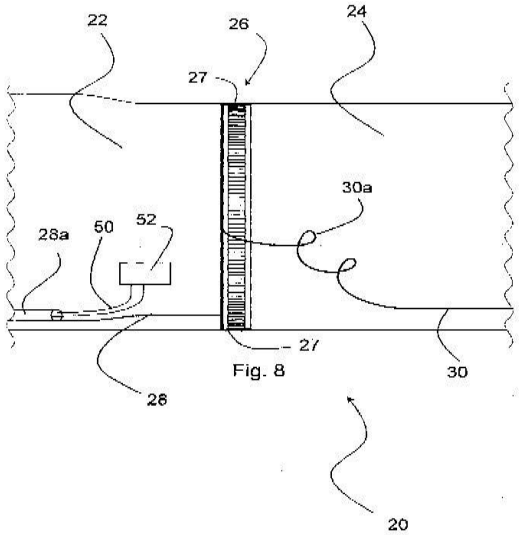

Fig. 8

No. of Pages : 28 No. of Claims : 15

(12) PATENT APPLICATION PUBLICATION
(21) Application No.862/DEL/2012 A
(19) INDIA
(22) Date of filing of Application :23/03/2012
(43) Publication Date : 28/08/2015

(54) Title of the invention : PROCESS FOR PREPARATION OF EPROSARTAN OR PHARMACEUTICALLY ACCEPTABLE SALTS THEREOF VIA A NOVEL INTERMEDIATE

(51) International classification :A61K
(31) Priority Document No :NA
(32) Priority Date :NA
(33) Name of priority country :NA
(86) International Application No :NA
Filing Date :NA
(87) International Publication No :NA
(61) Patent of Addition to Application Number :NA
Filing Date :NA
(62) Divisional to Application Number :NA
Filing Date :NA

(71)**Name of Applicant :**
1)JUBILANT LIFE SCIENCES LIMITED
Address of Applicant :PLOT 1A, SECTOR 16A, NOIDA-201 301, UP, INDIA Uttar Pradesh India
(72)**Name of Inventor :**
1)HOLKAR, ANIL GANPATRAO
2)PATEL, CHETAN B.
3)SURESH, C H
4)POOJARI, SANTHOSHA S.
5)CHANDRASHEKHAR, Y
6)VIR, DHARAM
7)AGARWAL, ASHUTOSH

(57) Abstract :
The invention relates to a novel intermediate of Eprosartan, process for producing the same and employing the same for producing Eprosartan or pharmaceutically acceptable salts thereof in high yield and purity in an industrial friendly manner.

No. of Pages : 23 No. of Claims : 16

(12) PATENT APPLICATION PUBLICATION
(19) INDIA
(22) Date of filing of Application :23/03/2012
(21) Application No.2579/DELNP/2012 A
(43) Publication Date : 28/08/2015

(54) Title of the invention : DIESEL ENGINE

(51) International classification :F01N 3/02
(31) Priority Document No :2009-242803
(32) Priority Date :21/10/2009
(33) Name of priority country :Japan
(86) International Application No :PCT/JP2010/68509
Filing Date :20/10/2010
(87) International Publication No :WO 2011/049137
(61) Patent of Addition to Application Number :NA
Filing Date :NA
(62) Divisional to Application Number :NA
Filing Date :NA

(71)**Name of Applicant :**
1)YANMAR CO., LTD.
Address of Applicant :1-9, TSURUNOCHO, KITA-KU, OSAKA-SHI, OSAKA 530-8311 JAPAN Japan
(72)**Name of Inventor :**
1)HIROSHI OOHASHI
2)TOMOHIRO FUKUDA
3)TAICHI TOGASHI

(57) Abstract :
Provided is a diesel engine which can efficiently regenerate a diesel particulate filter in accordance with the state of an operation. The control for regeneration using an ECU in the diesel engine is comprised of first regeneration wherein particulate matter is removed by means of burning at slightly more than 300°C for 20 min when the accumulation of particulate matter exceeds a first threshold value; second regeneration wherein particulate matter is burned at approximately 560°C for 30 min by an additional injection to completely remove particulate matter other than ash when the accumulation of particulate matter exceeds the first threshold value for a first predetermined period of time, or every 100 h; and third regeneration wherein particulate matter is burned at approximately 600°C for 15 min by an additional injection to completely remove particulate matter other than ash when the accumulation of particulate matter exceeds a second threshold value and an emergency regeneration starting switch is pushed, or when 50 h have elapsed after previous implementation of second regeneration or third regeneration and the emergency regeneration starting switch is pushed.

No. of Pages : 43 No. of Claims : 9

(12) PATENT APPLICATION PUBLICATION
(21) Application No.2580/DELNP/2012 A
(19) INDIA
(22) Date of filing of Application :23/03/2012
(43) Publication Date : 28/08/2015

(54) Title of the invention : MGLUR4 ALLOSTERIC POTENTIATORS, COMPOSITIONS, AND METHODS OF TREATING NEUROLOGICAL DYSFUNCTION

(51) International classification :A01N 55/02
(31) Priority Document No :61/240,031
(32) Priority Date :04/09/2009
(33) Name of priority country :U.S.A.
(86) International Application No :PCT/US2010/048030
Filing Date :07/09/2010
(87) International Publication No :WO 2011/029104
(61) Patent of Addition to Application Number :NA
Filing Date :NA
(62) Divisional to Application Number :NA
Filing Date :NA

(71)**Name of Applicant :**
1)VANDERBILT UNIVERSITY
Address of Applicant :305 KIRKLAND HALL, NASHVILLE, TENNESSEE 37240, U.S.A. U.S.A.
(72)**Name of Inventor :**
1)CONN P. JEFFREY
2)LINDSLEY CRAIG W.
3)HOPKINS COREY R.
4)WEAVER CHARLES DAVID
5)NISWENDER COLLEEN M.
6)ENGERS DARREN W.
7)CHEUNG YIU-YIN
8)GENTRY PATRICK R.
9)SALOVICH JAMES M.
10)GOGLIOTTI ROCCO D.

(57) Abstract :
Compounds useful as allosteric potentiators/positive allosteric modulators of the metabotropic glutamate receptor subtype 4 (mGluR4) and use thereof.

No. of Pages : 173 No. of Claims : 97

(12) PATENT APPLICATION PUBLICATION
(21) Application No.3828/DELNP/2012 A
(19) INDIA
(22) Date of filing of Application :01/05/2012
(43) Publication Date : 28/08/2015

(54) Title of the invention : THROUGH SHAFT ROTARY POSITION SENSOR

(51) International classification :G01D 5/14
(31) Priority Document No :61/281,132
(32) Priority Date :13/11/2009
(33) Name of priority country :U.S.A.
(86) International Application No :PCT/US2010/056463
Filing Date :12/11/2010
(87) International Publication No :WO 2011/060226
(61) Patent of Addition to Application Number :NA
Filing Date :NA
(62) Divisional to Application Number :NA
Filing Date :NA

(71)**Name of Applicant :**
1)CTS CORPORATION
Address of Applicant :905 WEST BOULEVARD NORTH, ELKHART, INDIANA 46514, U.S.A. U.S.A.
(72)**Name of Inventor :**
1)BLAKESLEY PATRICK

(57) Abstract :
A rotary position sensor assembly includes a ring magnet extending around the outer surface of a rotatable through shaft. A sensor which measures changes in the direction of the magnetic flux generated by the magnet in response to rotation of the shaft and a pair of magnet pole pieces are located opposite and spaced from the magnet. The sensor is located between the pair of pole pieces and the pole pieces conduct the magnetic flux over the sensor and nominalize the strength of the magnetic flux sensed by the sensor over the full range of rotation of the shaft relative to the sensor.

No. of Pages : 15 No. of Claims : 11

(12) PATENT APPLICATION PUBLICATION
(21) Application No.526/DELNP/2012 A
(19) INDIA
(22) Date of filing of Application :18/01/2012
(43) Publication Date : 28/08/2015

(54) Title of the invention : PROSTHETIC DEVICE INCLUDING ELECTROSTATICALLY SPUN FIBROUS LAYER AND METHOD FOR MAKING THE SAME

(51) International classification :A61F2/06
(31) Priority Document No :61/232252
(32) Priority Date :07/08/2009
(33) Name of priority country :U.S.A.
(86) International Application No :PCT/US2010/044879
Filing Date :09/08/2010
(87) International Publication No :WO 2011/017698
(61) Patent of Addition to Application Number :NA
Filing Date :NA
(62) Divisional to Application Number :NA
Filing Date :NA

(71)**Name of Applicant :**
1)ZEUS INDUSTRIAL PRODUCTS INC.
Address of Applicant :3737 Industrial Boulevard Orangeburg South Carolina 29118 U.S.A.
(72)**Name of Inventor :**
1)ANNEAUX Bruce L.
2)BALLARD Robert L.

(57) Abstract :
In accordance with certain embodiments of the present disclosure a process of forming a prosthetic device is provided. The process includes forming a dispersion of polymeric nanofibers a fiberizing polymer and a solvent the dispersion having a viscosity of at least about 50 000 cPs. A tubular frame is positioned over a tubular polymeric structure. Nanofibers from the dispersion are electrospun onto the tubular frame to form a prosthetic device. The prosthetic device is heated.

No. of Pages : 30 No. of Claims : 20

(12) PATENT APPLICATION PUBLICATION
(21) Application No.842/DEL/2012 A
(19) INDIA
(22) Date of filing of Application :22/03/2012
(43) Publication Date : 28/08/2015

(54) Title of the invention : A GRID TIED INVERTER, SYSTEM AND METHOD

(51) International classification :H03G
(31) Priority Document No :1105281.8
(32) Priority Date :29/03/2011
(33) Name of priority country :U.K.
(86) International Application No :NA
Filing Date :NA
(87) International Publication No :NA
(61) Patent of Addition to Application Number :NA
Filing Date :NA
(62) Divisional to Application Number :NA
Filing Date :NA

(71)**Name of Applicant :**
1)SONY CORPORATION
Address of Applicant :1-7-1 KONAN, MINATO-KU, TOKYO 108-0075, JAPAN Japan
(72)**Name of Inventor :**
1)ALEXANDER CHARLES KNILL

(57) Abstract :
A grid tied inverter connectable to an electricity grid, the grid tied inverter comprising a DC to DC current fed push-pull converter operable to generate a current waveform from a DC voltage source, the current waveform being substantially synchronised to the electricity grid, the push-pull converter comprising a transformer having a first side connectable to a battery and a second side connectable to the grid, wherein each of the two primary sides is connected to ground via a switching transistor; and respective voltage clamps are connected between the respective primary side of the transformer and the respective switching transistor, the voltage clamp commutating the current from the respective primary side of the transformer when the switching transistor is turned off.

No. of Pages : 33 No. of Claims : 11

(12) PATENT APPLICATION PUBLICATION
(21) Application No.3864/DELNP/2012 A
(19) INDIA
(22) Date of filing of Application :02/05/2012
(43) Publication Date : 28/08/2015

(54) Title of the invention : APPARATUS AND METHODS FOR ACHIEVING LOW NOX IN A GRATE-KILN PELLETIZING FURNACE

(51) International classification :F27B 7/36
(31) Priority Document No :61/ 258,831
(32) Priority Date :06/11/2009
(33) Name of priority country :U.S.A.
(86) International Application No :PCT/US2010/051745
Filing Date :07/10/2010
(87) International Publication No :WO 2011/056343
(61) Patent of Addition to Application Number :NA
Filing Date :NA
(62) Divisional to Application Number :NA
Filing Date :NA

(71)**Name of Applicant :**
1) FIVE NORTH AMERICAN COMBUSTION, INC.
Address of Applicant :4455 EAST 71ST STREET, CLEVELAND, OHIO 44105 U.S.A. U.S.A.
(72)**Name of Inventor :**
1)CAIN BRUCE E.

(57) Abstract :
A grate-kiln pelletizing furnace includes a grate that conveys pelletized material to a rotary kiln, a cooler that cools pelletized material from the rotary kiln, and a gas flow apparatus that directs a stream of gas from the cooler to the rotary kiln to provide preheated process air for pelletized material in the rotary kiln. The gas flow apparatus also directs a stream of gas from the grate to the rotary kiln to vitiate the preheated process air.

No. of Pages : 37 No. of Claims : 37

(12) PATENT APPLICATION PUBLICATION
(21) Application No.500/DEL/2014 A
(19) INDIA
(22) Date of filing of Application :21/02/2014
(43) Publication Date : 28/08/2015

(54) Title of the invention : SYSTEMS AND METHODS FOR STORAGE AGGREGATES AND INFINATE STORAGE VOLUMES

(51) International classification :G06F
(31) Priority Document No :NA
(32) Priority Date :NA
(33) Name of priority country :NA
(86) International Application No :PCT//
Filing Date :01/01/1900
(87) International Publication No : NA
(61) Patent of Addition to Application Number :NA
Filing Date :NA
(62) Divisional to Application Number :NA
Filing Date :NA

(71)**Name of Applicant :**
1)NETAPP, INC.
Address of Applicant :495 East Java Drive, Sunnyvale, California, USA U.S.A.
(72)**Name of Inventor :**
1)JAMES NAMBOORIKANDATHIL JOSEPH
2)VISHAL KANAUJIA
3)CHETAN JAYANT GIRIDHAR

(57) Abstract :
A method of storing data to an aggregate storage system including: receiving data at the aggregate storage system, wherein the aggregate storage system includes a random-access storage component and a sequential-access storage component, and wherein the data includes one or more data portions and one or more metadata portions; identifying each portion of the data as either one of the data portions or one of the metadata portions; in response to determining that one of the metadata portions is identified, writing the metadata portion to the random-access storage component and the sequential-access storage component; and in response to determining that one of the data portions is identified, writing the data portion only to the sequential-access storage component.

No. of Pages : 28 No. of Claims : 20

(12) PATENT APPLICATION PUBLICATION
(21) Application No.863/DEL/2012 A
(19) INDIA
(22) Date of filing of Application :23/03/2012
(43) Publication Date : 28/08/2015

(54) Title of the invention : IMAGING DEVICE

(51) International classification	:H01J	(71)**Name of Applicant :**
(31) Priority Document No	:2011-071690	**1)NIKON CORPORATION**
(32) Priority Date	:29/03/2011	Address of Applicant :12-1, YURAKUCHO 1-CHOME CHIYODA-KU, TOKYO 100-8331 JAPAN Japan
(33) Name of priority country	:Japan	(72)**Name of Inventor :**
(86) International Application No	:NA	**1)MIYAKAWA, YOSHIAKI**
Filing Date	:NA	
(87) International Publication No	:NA	
(61) Patent of Addition to Application Number	:NA	
Filing Date	:NA	
(62) Divisional to Application Number	:NA	
Filing Date	:NA	

(57) Abstract :
The imaging device of the present invention is provided with: an imaging sensor that captures subject light; a display unit that displays a through-image based on an imaging signal from the imaging sensor; a movie image generation unit that generates, on the basis of the imaging signal from the imaging sensor, at least two movie images each focused to at least two different regions set in the through-image displayed on the display unit; an image processing unit that performs image processing in linking portions of each of the movie images in order to link the at least two movie images generated by the movie image generation unit and generate compiled movie images; and a display control unit that controls the display unit to display the compiled movie images.

No. of Pages : 67 No. of Claims : 12

(12) PATENT APPLICATION PUBLICATION
(21) Application No.2759/DELNP/2015 A
(19) INDIA
(22) Date of filing of Application :04/04/2015
(43) Publication Date : 28/08/2015

(54) Title of the invention : RUBBER COMPOSITION ,AND VULCANIZATE AND MOLDED ARTICLE THEREOF

(51) International classification :C08L11/00,C08K3/04,C08K3/08
(31) Priority Document No :PCT/JP2012/073409
(32) Priority Date :13/09/2012
(33) Name of priority country :Japan
(86) International Application No :PCT/JP2013/065093
Filing Date :30/05/2013
(87) International Publication No :WO 2014/041856
(61) Patent of Addition to Application Number :NA
Filing Date :NA
(62) Divisional to Application Number :NA
Filing Date :NA

(71)**Name of Applicant :**
1)DENKI KAGAKU KOGYO KABUSHIKI KAISHA
Address of Applicant :1- 1, Nihonbashi Muromachi 2- chome Chuo-ku, Tokyo 1038338 Japan
(72)**Name of Inventor :**
1)KOBAYASHI Naoki
2)ABE Yasushi

(57) Abstract :
Provided are a rubber composition whereby a vulcanizate having excellent heat resistance is obtained and a vulcanizate and molded article of the rubber composition. A rubber composition obtained by blending 3- 20 parts by mass of zinc powder having an arithmetic average particle diameter of 3 -10 µm as measured by a method in accordance with JIS Z8901 and 4 -16 parts by mass of magnesium oxide having a BET specific surface area of 20- 150 m/g as measured by a one- point method in accordance with JIS Z8830 with respect to 100 parts by mass of a rubber component comprising 50- 90% by mass of chloroprene rubber and 10- 50% by mass of an elastomer. The rubber composition is molded/vulcanized to obtain a vulcanizate or a molded article.

No. of Pages : 38 No. of Claims : 8

(12) PATENT APPLICATION PUBLICATION
(21) Application No.841/DEL/2012 A
(19) INDIA
(22) Date of filing of Application :22/03/2012
(43) Publication Date : 28/08/2015

(54) Title of the invention : IMAGE PROCESSING DEVICE, IMAGE PROCESSING METHOD, AND PROGRAM

(51) International classification :G06M
(31) Priority Document No :2011071541
(32) Priority Date :29/03/2011
(33) Name of priority country :Japan
(86) International Application No :NA
Filing Date :NA
(87) International Publication No :NA
(61) Patent of Addition to Application Number :NA
Filing Date :NA
(62) Divisional to Application Number :NA
Filing Date :NA

(71)**Name of Applicant :**
1)SONY CORPORATION
Address of Applicant :1-7-1 KONAN, MINATO-KU, TOKYO, JAPAN Japan
(72)**Name of Inventor :**
1)DAISUKE ISO
2)TEPPEI KURITA
3)TOMOO MITSUNAGA

(57) Abstract :
An image processing device includes an image estimation unit that estimates an image prior to the jaggedness occurrence from a jaggedness-occurring image and generates an estimated image prior to the jaggedness occurrence, and a weighting/adding unit that selects a jaggedness-occurring area as a processing target area in the estimated image prior to the jaggedness occurrence, detects a similar area that is a pixel area and similar to the processing target area, and then computes a weight according to the degree of similarity of each detected similar area to the processing target area, and detects a corresponding area in the jaggedness-occurring image to the processing target area and the similar area, and then computes a corrected pixel value of the processing target area of the jaggedness-occurring image through a weighting/adding process to which the weight of a pixel value of the detected corresponding area is applied.

No. of Pages : 71 No. of Claims : 11

(12) PATENT APPLICATION PUBLICATION
(21) Application No.846/DEL/2012 A
(19) INDIA
(22) Date of filing of Application :22/03/2012
(43) Publication Date : 28/08/2015

(54) Title of the invention : HEALTH INFORMATION TELECOMMUNICATIONS SYSTEM AND METHOD

(51) International classification :H04N
(31) Priority Document No :13/076962
(32) Priority Date :31/03/2011
(33) Name of priority country :U.S.A.
(86) International Application No :NA
Filing Date :NA
(87) International Publication No :NA
(61) Patent of Addition to Application Number :NA
Filing Date :NA
(62) Divisional to Application Number :NA
Filing Date :NA

(71)**Name of Applicant :**
1)GENERAL ELECTRIC COMPANY
Address of Applicant :1 RIVER ROAD, SCHENECTADY, NEW YORK 12345, U.S.A U.S.A.
(72)**Name of Inventor :**
1)DELL'ANNO, MICHAEL JOSEPH
2)HARTMAN, MICHAEL JAMES
3)MITCHELL JR., ROBERT JAMES
4)ROSS, JOHN ANDERSON FERGUS
5)SORO, STANISLAVA
6)HERSHEY, JOHN ERIK

(57) Abstract :
Health information communications systems (100) and methods are disclosed. In one embodiment, the system (100) includes one or more medical sensors (104, 106, 208) providing one or more health information data types. The system further includes a patient communications device (102) coupled to at least one medical sensor (104, 106, 208) over a communications network (110). Particularly, the patient communications device (104, 106, 208) includes a patient quality of service (QoS) manager (224) that dynamically specifies a set of data quality management parameters for transporting at least some of the health information and modifies at least some of the health information into value factored health information. Additionally, the system includes a specialist communications device (108) communicatively coupled to the patient communication device (102) over the communications network (110). The specialist communications device (108) includes a specialist QoS manager (324) that provides measured channel characteristics to the patient communications device (102). The patient QoS manager (224) dynamically specifies the set of data quality management parameters based at least in part on the measured channel characteristics of the specialist communications device (108).

No. of Pages : 52 No. of Claims : 15

(12) PATENT APPLICATION PUBLICATION
(21) Application No.865/DEL/2012 A
(19) INDIA
(22) Date of filing of Application :23/03/2012
(43) Publication Date : 28/08/2015

(54) Title of the invention : METHOD FOR REDUCTION OF THREAD TENSION IN A BOBBIN -WINDING MACHINE

(51) International classification :D06N
(31) Priority Document No :NA
(32) Priority Date :NA
(33) Name of priority country :NA
(86) International Application No :NA
Filing Date :NA
(87) International Publication No :NA
(61) Patent of Addition to Application Number :NA
Filing Date :NA
(62) Divisional to Application Number :NA
Filing Date :NA

(71)**Name of Applicant :**
1)ANANT SPINNING MILLS, MANDIDEEP (A UNIT OF VARDHMAN TEXTILES LIMITED)
Address of Applicant :PLOT NO. 1-A, NEW INDUSTRIAL AREA - 1, MANDIDEEP - 462046 DISTT. - RAISEN (M.P.), INDIA. Madhya Pradesh India
(72)**Name of Inventor :**
1)R. S. YADAV

(57) Abstract :
The subject matter described herein relates to a speed frame and the method for reducing the thread tension in the speed frame. The speed frame includes a plurality of bobbins structured to receive threads by their respective bobbin rails rotating around the respective bobbins. The speed frame is further provided with a motor for actuating a power transmission mechanism to reciprocate the axial movement of the bobbin rails. The power transmission mechanism includes bevel gears coupled to an electromagnetic clutch. The subject matter discloses that the threads are manually tied at the extreme top position of the bobbins where after the axial movement of the rotating bobbin rails configure the automatic winding of the threads on the bobbins. REFER FIG. 1

No. of Pages : 10 No. of Claims : 7

(12) PATENT APPLICATION PUBLICATION
(21) Application No.2570/DELNP/2012 A
(19) INDIA
(22) Date of filing of Application :23/03/2012
(43) Publication Date : 28/08/2015

(54) Title of the invention : ANTIMICROBIAL COMPOSITION, ANTIMICROBIAL BRUSH FILAMENTS AND PREPARATION METHOD THEREOF

(51) International classification :A01N 59/16
(31) Priority Document No :200910207081.1
(32) Priority Date :26/10/2009
(33) Name of priority country :China
(86) International Application No :PCT/US2010/054029
Filing Date :26/10/2010
(87) International Publication No :WO 2011/056536
(61) Patent of Addition to Application Number :NA
Filing Date :NA
(62) Divisional to Application Number :NA
Filing Date :NA

(71)**Name of Applicant :**
1)E. I. DU PONT DE NEMOURS AND COMPANY
Address of Applicant :1007 MARKET STREET, WILMINGTON, DELAWARE 19898, U.S.A. U.S.A.
2)DUPONT XINGDA FILAMENTS CO., LTD.
(72)**Name of Inventor :**
1)WANG, MINGSONG
2)LIU, XIANQIAO

(57) Abstract :
Disclosed is a method for preparing an antimicrobial composition for making filament for brushes. The method comprises steps in the following order: (1) mechanically pulverizing a polymer to obtain a polymer powder; (2) blending the polymer powder obtained in step (1) with an antimicrobial agent comprising phosphate, or glass, micropowder loaded with silver, zinc, or a silver-zinc composite.

No. of Pages : 17 No. of Claims : 14

(12) PATENT APPLICATION PUBLICATION
(21) Application No.345/DEL/2015 A
(19) INDIA
(22) Date of filing of Application :06/02/2015
(43) Publication Date : 28/08/2015

(54) Title of the invention : HIGH BRIGHTNESS HEAD-UP DISPLAY DEVICE

(51) International classification	:g02b	(71)**Name of Applicant :**
(31) Priority Document No	:10-2014-0022150	**1)Hae-Yong Choi**
(32) Priority Date	:25/02/2014	Address of Applicant :I-PARK APT. 108 Dong 301 Ho, 286 Jungnangcheon-ro, Jungnang-gu, Seoul, Korea Republic of Korea
(33) Name of priority country	:Republic of Korea	(72)**Name of Inventor :**
(86) International Application No	:NA	**1)Hae-Yong Choi**
Filing Date	:NA	
(87) International Publication No	: NA	
(61) Patent of Addition to Application Number	:NA	
Filing Date	:NA	
(62) Divisional to Application Number	:NA	
Filing Date	:NA	

(57) Abstract :
Provided is a high brightness head-up display device wherein a spherical half-transparent mirror is provided on an upper end of a case, a projector unit is provided on a lower end thereof, and a spherical reflection screen is provided on a front of the projector unit. A projection distance of the projector unit corresponds to a focal distance of the spherical reflection screen and the spherical half-transparent mirror is provided on a front of the spherical reflection screen wherein a reflection rate of the spherical reflection screen is 2-80% and the interval between spherical reflection screen and the spherical half-transparent mirror is disposed at a focal distance of the spherical half-transparent mirror. A shielding film is attached to a rear of the spherical halftransparent mirror, which shields external light and permits 80% of light to be transmitted to outside from inside, thereby increasing brightness of image to 2-320 times compared to a conventional screen.

No. of Pages : 31 No. of Claims : 6

(12) PATENT APPLICATION PUBLICATION
(21) Application No.824/DEL/2012 A
(19) INDIA
(22) Date of filing of Application :21/03/2012
(43) Publication Date : 28/08/2015

(54) Title of the invention : METHOD AND SYSTEM FOR AERIAL VEHICLE TRAJECTORY MANAGEMENT

(51) International classification :H03G
(31) Priority Document No :13/069,866
(32) Priority Date :23/03/2011
(33) Name of priority country :U.S.A.
(86) International Application No :NA
Filing Date :NA
(87) International Publication No :NA
(61) Patent of Addition to Application Number :NA
Filing Date :NA
(62) Divisional to Application Number :NA
Filing Date :NA

(71)**Name of Applicant :**
1)GE AVIATION SYSTEMS LLC
Address of Applicant :3290 PATTERSON AVENUE, SE GRAND RAPIDS, MICHIGAN 49512-1991, U.S.A. U.S.A.
(72)**Name of Inventor :**
1)KLOOSTER, JOEL KENNETH
2)REN, LILLING
3)HOCHWARTH, JOACHIM KARL ULF

(57) Abstract :
A method (400) and system (100) of managing an aerial vehicle trajectory is provided. The remote trajectory management system (RTMS) (100) for a fleet of aircraft includes an input specification module (102) configured to manage information specifying flight-specific input data used to generate a trajectory, an aircraft model module (106) including data that specifies a performance of the aircraft and engines of the aircraft, a predict 4D trajectory module (116) configured to receive the specified inputs from the input specification module and an aircraft performance model from aircraft model module (106) and to generate a 4D trajectory for a predetermined flight, and a trajectory export module (120) configured to transmit a predetermined subset of the predicted trajectory to the aircraft.

No. of Pages : 25 No. of Claims : 8

(12) PATENT APPLICATION PUBLICATION
(19) INDIA
(22) Date of filing of Application :02/05/2012
(21) Application No.3847/DELNP/2012 A
(43) Publication Date : 28/08/2015

(54) Title of the invention : TROCAR ASSEMBLY

(51) International classification :A61B 17/34
(31) Priority Document No :12/575,537
(32) Priority Date :08/10/2009
(33) Name of priority country :U.S.A.
(86) International Application No :PCT/US2010/051465
Filing Date :05/10/2010
(87) International Publication No :WO 2011/044118
(61) Patent of Addition to Application Number :NA
Filing Date :NA
(62) Divisional to Application Number :NA
Filing Date :NA

(71)**Name of Applicant :**
1)ETHICON ENDO-SURGERY, INC
Address of Applicant :4545, CREEK ROAD, CINCINNATI, OH 45242, U.S.A. U.S.A.
(72)**Name of Inventor :**
1)SHAILENDRA K. PARIHAR
2)HARESH PATIL
3)MICHAEL D. CRONIN
4)MICHAEL S. CROPPER
5)FREDERICK E. SHELTON
6)DANIEL H. DUKE
7)GREGORY W. JOHNSON
8)CARL J. SHURTLEFF
9)ANDREW T. BECKMAN
10)WELLS DANIEL HABERSTICH

(57) Abstract :
A trocar assembly including a sleeve assembly having a cannula connected to a housing and an obturator assembly including a handle connected to an obturator, wherein the obturator assembly is receivable in the sleeve assembly to define a gripping portion that includes the housing and the handle, the gripping portion having an axial length and a maximum width, and wherein a ratio of the axial length to the maximum width ranges from about 2.5 to about 3.5.

No. of Pages : 123 No. of Claims : 106

(12) PATENT APPLICATION PUBLICATION
(21) Application No.2576/DELNP/2012 A
(19) INDIA
(22) Date of filing of Application :23/03/2012
(43) Publication Date : 28/08/2015

(54) Title of the invention : OXALIPLATIN NANOPARTICLES AND METHOD FOR PREPARING SAME

(51) International classification :A61K 9/16
(31) Priority Document No :10-2009-0089079
(32) Priority Date :21/09/2009
(33) Name of priority country :Republic of Korea
(86) International Application No :PCT/KR2010/006459
Filing Date :20/09/2010
(87) International Publication No :WO 2011/034394
(61) Patent of Addition to Application Number :NA
Filing Date :NA
(62) Divisional to Application Number :NA
Filing Date :NA

(71)**Name of Applicant :**
1)JW PHARMACEUTICAL CORPORTION
Address of Applicant :698, SINDAEBANG-DONG, DONGJAK-GU SEOUL 156-757, REPUBLIC OF KOREA Republic of Korea
2)BIO-SYNECTICS, INC.
(72)**Name of Inventor :**
1)LEE SUNG JAE
2)KIM YOUNG HOON
3)LEE SANG HEON
4)KIM KAB SIG

(57) Abstract :
The present invention relates to a nanoparticle of oxaliplatin, which is a water-soluble active substance, a pharmaceutical composition containing the same, and a method for preparing an orally administrable oxaliplatin nanoparticle by emulsifying a lipid mixture solution wherein a solid lipid and a surfactant are mixed in an aqueous mixture solution wherein oxaliplatin and a specific cosolvent are mixed and then removing the solid lipid and the cosolvent using a supercritical fluid gas. By providing oxaliplatin, which is currently available only in injection form for parenteral administration, in the form of a nanoparticle, the present invention allows for the development of orally administrable oxaliplatin which is stable against gastric acid and has improved bioavailability, thereby improving patient compliance through avoiding the inconvenience of injection and greatly reducing medical cost. Since the oxaliplatin nanoparticle can be prepared economically using a relatively inexpensive supercritical fluid producing facility, it can be prepared via a simple process with high yield in commercial scale.

No. of Pages : 37 No. of Claims : 15

(12) PATENT APPLICATION PUBLICATION
(21) Application No.2751/DELNP/2015 A
(19) INDIA
(22) Date of filing of Application :03/04/2015
(43) Publication Date : 28/08/2015

(54) Title of the invention : SHELF- STABLE, CLEAR LIQUID NUTRITIONAL COMPOSITIONS COMPRISING EPIGALLOCATECHIN GALLATE (EGCG) AND METHODS FOR PREPARING THE SAME

(51) International classification :A23L1/30,A23L2/52,A23L2/66
(31) Priority Document No :61/709715
(32) Priority Date :04/10/2012
(33) Name of priority country :U.S.A.
(86) International Application No :PCT/US2013/063394
Filing Date :04/10/2013
(87) International Publication No :WO 2014/055830
(61) Patent of Addition to Application Number :NA
Filing Date :NA
(62) Divisional to Application Number :NA
Filing Date :NA

(71)**Name of Applicant :**
1)ABBOTT LABORATORIES
Address of Applicant :Dept. 377/AP6A- 1, 100 Abbott Park Road, Abbott Park ,Illinois 60064 U.S.A.
(72)**Name of Inventor :**
1)PATEL, Gaurav;
2)JOHNS, Paul;
3)DEWILLE,Normanella;
4)PEREIRA, Suzette;

(57) Abstract :
Disclosed herein are shelf -stable , clear liquid nutritional compositions having a pH ranging from 2.5 to 4.6 and comprising water; at least one source of EGCg in an amount sufficient to provide 200- 1700 mg/L of EGCg; and at least one source of protein in an amount sufficient to provide 25- 45 g/L of total protein. The shelf -stable, clear liquid nutritional compositions lose no more than 20% by weight solids of the EGCg content present in the initial formulation of the compositions to epimerization , degradation , or both epimerization and degradation during heat sterilization. In certain embodiments , the loss of EGCg is exhibited by the amount of epimerization product GCg present in the shelf -stable , clear liquid nutritional composition following heat sterilization. Methods for preparing the shelf -stable , clear liquid nutritional compositions are also disclosed herein.

No. of Pages : 43 No. of Claims : 39

(12) PATENT APPLICATION PUBLICATION
(21) Application No.3791/DELNP/2012 A
(19) INDIA
(22) Date of filing of Application :01/05/2012
(43) Publication Date : 28/08/2015

(54) Title of the invention : FLASH BUTT WELDING METHOD OF RAIL STEEL

(51) International classification :B23K 11/04
(31) Priority Document No :2009-251071
(32) Priority Date :30/10/2009
(33) Name of priority country :Japan
(86) International Application No :PCT/JP2010/068927
Filing Date :26/10/2010
(87) International Publication No :WO 2011/052562
(61) Patent of Addition to Application Number :NA
Filing Date :NA
(62) Divisional to Application Number :NA
Filing Date :NA

(71)**Name of Applicant :**
1)NIPPON STEEL & SUMITOMO METAL CORPORATION,
Address of Applicant :6-1, MARUNOUCHI 2-CHOME, CHIYODA-KU, TOKYO 100-8071, JAPAN, Japan
(72)**Name of Inventor :**
1)KENJI SAITA
2)HIROSHI FUKUCHI
3)YASUNOBU TSUTSUMI

(57) Abstract :
This welding method is a flash butt welding method of a pair of track rail steel pieces, having: a preheating process in which electric current is made to flow for a predetermined time in a state in which the welding surfaces of a pair of track rail steel pieces are forcibly brought into contact with each other, and vicinities of the welding surfaces are heated by resistance heating; a former flashing process in which flashing is partially caused in the welding surfaces, and the welding surfaces are heated by the resistance heating and arc heating of the flashing; and a latter flashing process in which the flashing is furthermore caused throughout the entire welding surfaces, and the entire welding surfaces are uniformly heated by the resistance heating and arc heating of the flashing, in which a latter flashing velocity is 2.1 mm/sec to 2.8 mm/sec in the latter flashing process.

No. of Pages : 51 No. of Claims : 9

(12) PATENT APPLICATION PUBLICATION
(21) Application No.848/DEL/2012 A
(19) INDIA
(22) Date of filing of Application :22/03/2012
(43) Publication Date : 28/08/2015

(54) Title of the invention : MEMBRANE FILTRATION MODULE

(51) International classification :B23B
(31) Priority Document No :10 2011 006 543.1
(32) Priority Date :31/03/2011
(33) Name of priority country :Germany
(86) International Application No :NA
Filing Date :NA
(87) International Publication No :NA
(61) Patent of Addition to Application Number :NA
Filing Date :NA
(62) Divisional to Application Number :NA
Filing Date :NA

(71)**Name of Applicant :**
1)KRONES AG
Address of Applicant :BOEHMERWALDSTRASSE 5, 93073 NEUTRAUBLING GERMANY Germany
(72)**Name of Inventor :**
1)ZACHARIAS, JORG
2)SCHEU, DIRK

(57) Abstract :
The invention comprises a membrane filtration module comprising a membrane element for filtering a liquid, a discharge pipe for the permeate or filtrate, and a connection device for joining a conduit to the discharge pipe, wherein the surface shell of the discharge pipe along a first longitudinal part is surrounded by the membrane element, wherein in a second longitudinal part the discharge pipe protrudes over the membrane element, and wherein the connection device in the region of the second longitudinal part is joined to the discharge pipe.

No. of Pages : 20 No. of Claims : 12

(12) PATENT APPLICATION PUBLICATION
(19) INDIA
(22) Date of filing of Application :23/03/2012
(21) Application No.2541/DELNP/2012 A
(43) Publication Date : 28/08/2015

(54) Title of the invention : METHOD FOR SIMULTANEOUSLY LOCATING AND MAPPING VIA RESILIENT NON-LINEAR FILTERING

(51) International classification :G01S 15/89
(31) Priority Document No :09 05114
(32) Priority Date :23/10/2009
(33) Name of priority country :France
(86) International Application No :PCT/EP2010/066075
Filing Date :25/10/2010
(87) International Publication No :WO 2011/048224
(61) Patent of Addition to Application Number :NA
Filing Date :NA
(62) Divisional to Application Number :NA
Filing Date :NA

(71)**Name of Applicant :**
1)THALES
Address of Applicant :45 RUE DE VILLIERS, 92200 NEUILLY-SUR-SEINE, FRANCE France
(72)**Name of Inventor :**
1)JULIEN FERRAND

(57) Abstract :
The method according to the invention consists in carrying out, by means of an underwater vehicle moving above a given zone of the sea bed, observations on the basis of which the positions of elements of relief and of objects present on the bed are estimated. These observations are associated with fictitious objects, tied together by fictitious elastic links so as to constitute a fictitious elastic network. The network is in equilibrium as long as no action is exerted on one or the other of the fictitious objects constituting the network. The objects then occupy fixed positions, positions assigned to the corresponding observations. On the other hand, when two observations assumed to correspond to one and the same object are fused into a single observation, the two corresponding fictitious objects are brought closer together. This bringing closer together induces the appearance of stresses in the fictitious elastic network. These stresses, transmitted by the fictitious elastic links, are resolved by the modification of the positions of the fictitious objects of the network, the modified positions being assigned to the corresponding observations. In this way, when the estimated position of an object having formed the subject of two fused observations is corrected, the measurement of the estimated position of each of the objects that has given rise to an observation represented in the fictitious elastic network benefits advantageously from this correction.

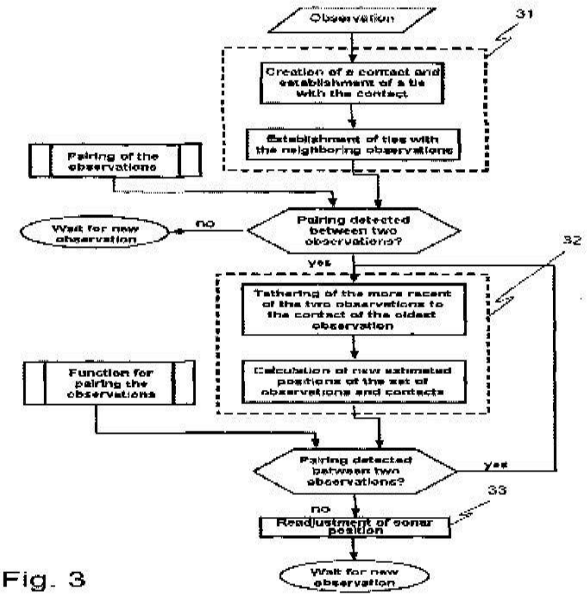

Fig. 3

No. of Pages : 37 No. of Claims : 9

(12) PATENT APPLICATION PUBLICATION
(21) Application No.543/DEL/2014 A
(19) INDIA
(22) Date of filing of Application :26/02/2014
(43) Publication Date : 28/08/2015

(54) Title of the invention : BRICK MAKING MACHINE

(51) International classification :G06F
(31) Priority Document No :NA
(32) Priority Date :NA
(33) Name of priority country :NA
(86) International Application No :NA
Filing Date :NA
(87) International Publication No : NA
(61) Patent of Addition to Application Number :NA
Filing Date :NA
(62) Divisional to Application Number :NA
Filing Date :NA

(71)**Name of Applicant :**
1)VILAS CHHIKARA
Address of Applicant :V.P.O. LADRAWAN, DISTRICT-JHAJJAR, TEHSIL-BAHADURGARH-124507, HARYANA, INDIA. Haryana India
(72)**Name of Inventor :**
1)STISH CHHIKARA
2)JUGPARVESH CHHIKARA

(57) Abstract :
The present invention relates to the Brick Making Machine (BMM) and the process of making the brick. Its principal object is to provide a machine of simple construction by which bricks may be manufactured at minimum expense and the numbers of labours employed are to the minimum. The bricks produced will be equal to the ordinary brick of commerce made with else method. In the machine applying a fresh quantity of material to one die will result in the discharge of a finished brick from another die. The process provides the production of bricks of uniform size and density by the use of pressure to exactly the same extent from opposite sides of the brick being formed.

No. of Pages : 20 No. of Claims : 10

(12) PATENT APPLICATION PUBLICATION
(19) INDIA
(22) Date of filing of Application :23/03/2012
(21) Application No.2585/DELNP/2012 A
(43) Publication Date : 28/08/2015

(54) Title of the invention : CUTTING INSERT FOR A CUTTING TOOL

(51) International classification :B23B 27/22
(31) Priority Document No :GM 612/2009
(32) Priority Date :02/10/2009
(33) Name of priority country :Austria
(86) International Application No :PCT/AT2010/000358
Filing Date :30/09/2010
(87) International Publication No :WO 2011/038433
(61) Patent of Addition to Application Number :NA
Filing Date :NA
(62) Divisional to Application Number :NA
Filing Date :NA

(71)**Name of Applicant :**
1)CERATIZIT AUSTRIA GESELLSCHAFT M.B.H.
Address of Applicant :A-6600 REUTTE, AUSTRIA. Austria
(72)**Name of Inventor :**
1)SCHLEINKOFER, UWE
2)VENTURINI, REMUS

(57) Abstract :
A cutting insert (1) for a cutting tool is provided. The following are formed in the following order in a radial direction Q which extends in a main plane H from the cutting corner (4) to a centre Z of the cutting insert (1): a declining rake face (8), a chip geometry floor (9; 9a, 9b, 9c) adjoining the rake face, a first chip geometry (11) adjoining the chip geometry floor and having a first surface (11a), which rises with respect to the chip geometry floor, and a first plateau (11b) adjoining said first surface (11a), a second chip geometry (12) having a second surface (12a), which rises with respect to the first plateau (11b), and a second plateau (12b) adjoining said second surface (12a), and a third chip geometry (13) having a third surface (13a), which rises with respect to the second plateau (12b), and a third plateau (13b) adjoining said third surface (13a).

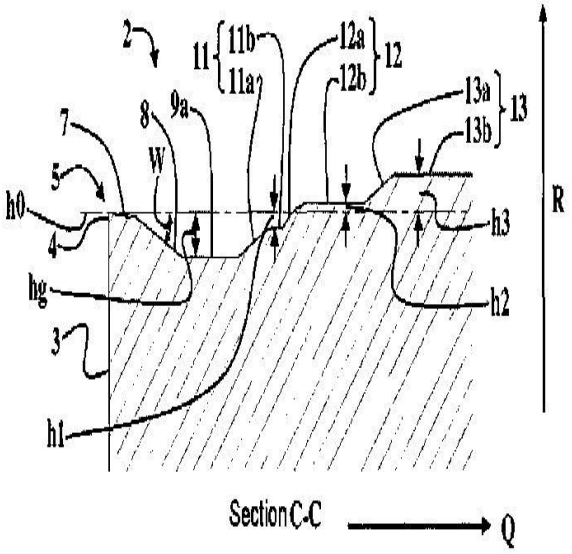

No. of Pages : 23 No. of Claims : 15

(12) PATENT APPLICATION PUBLICATION
(21) Application No.506/DEL/2014 A
(19) INDIA
(22) Date of filing of Application :24/02/2014
(43) Publication Date : 28/08/2015

(54) Title of the invention : A PROCESS FOR PREPARATION OF ACTIVATED CARBON SPHERES

(51) International classification :B01L
(31) Priority Document No :NA
(32) Priority Date :NA
(33) Name of priority country :NA
(86) International Application No :NA
Filing Date :NA
(87) International Publication No : NA
(61) Patent of Addition to Application Number :NA
Filing Date :NA
(62) Divisional to Application Number :NA
Filing Date :NA

(71)**Name of Applicant :**
1)DIRECTOR GENERAL, DEFENCE RESEARCH & DEVELOPMENT ORGANISATION
Address of Applicant :MINISTRY OF DEFENCE, GOVERNMENT OF INDIA, ROOM NO. 348, B-WING, DRDO BHAWAN, RAJAJI MARG, NEW DELHI-110011, INDIA Delhi India
(72)**Name of Inventor :**
1)SAXENA, ARVIND, KUMAR
2)SRIVASTAVA, ANURAG
3)SINGH, GIRIJIA, SHANKER
4)JOSHI, HARISH, CHANDRA
5)SINGH, ROHITASHAW, KUMAR
6)TRIPATHI, SHAILENDRA

(57) Abstract :
The invention relates to process for production of activated carbon sphere. The process is highly simple, cost effective and is efficient to produce activated carbon sphere having high mechanical strength and good surface properties.

No. of Pages : 18 No. of Claims : 10

(12) PATENT APPLICATION PUBLICATION
(21) Application No.892/DELNP/2005 A
(19) INDIA
(22) Date of filing of Application :07/03/2005
(43) Publication Date : 28/08/2015

(54) Title of the invention : TRIAZASPIRO [5.5]UNDECANE DERIVATIVES AND DRUGS COMPRISING THE SAME AS THE ACTIVE INGREDIENT

(51) International classification	:C07D 471/10	(71)**Name of Applicant :**
(31) Priority Document No	:NA	**1)ONE PHARMACEUTICAL CO., LTD**
(32) Priority Date	:NA	Address of Applicant :1-5, DOSHOMACHI 2-CHOME, CHUO-KU, OSAKA-SHI, OSAKA 541-8526, JAPAN Japan
(33) Name of priority country	:NA	
(86) International Application No	:PCT/JP2003/011834	(72)**Name of Inventor :**
Filing Date	:17/09/2003	**1)YOSHIKAZU TAKAOKA**
(87) International Publication No	: NA	**2)NA**
(61) Patent of Addition to Application Number	:NA	**3)RENA NISHIZAWA**
Filing Date	:NA	**4)SHIRO SHIBAYAMA**
(62) Divisional to Application Number	:NA	**5)KENJI SAGAWA**
Filing Date	:NA	**6)MASAYOSHI MATSUO**

(57) Abstract :
The present invention relates to (1) a compound represented by formula (I) (wherein all symbols have the same meanings as defined hereinafter), 13 a quaternary ammonium salt thereof or an N-oxide thereof, or a salt thereof, and (2) a pharmaceutical composition for prevent and/or treatment for inflammatory diseases, immunologic diseases, human immunodeficiency virus, allergic diseases, ischemia-reperfusion injury, acute respiratory distress syndrome, shock accompanied by bacterial infection, diabetes mellitus, or metastasis etc. comprising, as an active ingredient, the 1 i compound represented by formula (I), the quaternary ammonium salt thereof or the N-oxide thereof, or the salt thereof

No. of Pages : 148 No. of Claims : 14

(12) PATENT APPLICATION PUBLICATION
(19) INDIA
(22) Date of filing of Application :23/03/2012

(21) Application No.2564/DELNP/2012 A
(43) Publication Date : 28/08/2015

(54) Title of the invention : SYSTEM AND METHOD TO PROVIDE GIFT MEDIA

(51) International classification :H04N 7/16
(31) Priority Document No :61/239,742
(32) Priority Date :03/09/2009
(33) Name of priority country :U.S.A.
(86) International Application No :PCT/US2010/047874
Filing Date :03/09/2010
(87) International Publication No :WO 2011/029039
(61) Patent of Addition to Application Number :NA
Filing Date :NA
(62) Divisional to Application Number :NA
Filing Date :NA

(71)**Name of Applicant :**
1)OPENTV, INC.
Address of Applicant :275 SACRAMENTO STREET, SAN FRANCISCO, CALIFORNIA 94111, UNITED STATES OF AMERICA U.S.A.
(72)**Name of Inventor :**
1)CHAI, CRX, K.
2)FISHMAN, ALEX

(57) Abstract :
In various exemplary embodiments, a system and method to provide gift media is disclosed. The method includes receiving, at an interactive media component, a selection of the media item and a selection of at least one recipient for the media item from a user of a client device. A purchase transaction based on the selection of the media item and the at least one recipient is processed. Delivery of the media item to the at least one recipient is triggered.

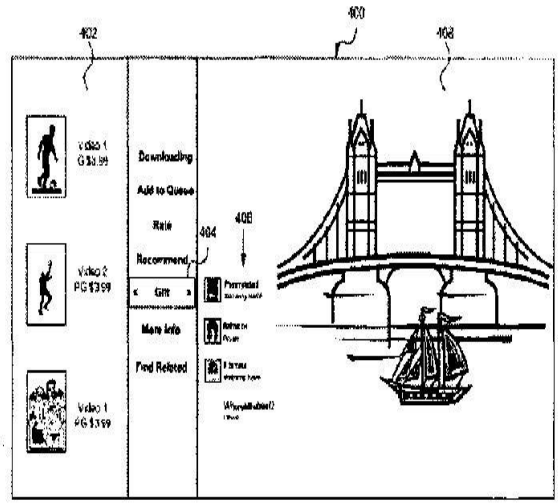

FIG. 4

No. of Pages : 29 No. of Claims : 21

(12) PATENT APPLICATION PUBLICATION
(21) Application No.533/DEL/2014 A
(19) INDIA
(22) Date of filing of Application :25/02/2014
(43) Publication Date : 28/08/2015

(54) Title of the invention : A NOVEL COMPOSITE USEFUL AS WOOD SUBSTITUE AND A PROCESS FOR THE PREPARATION THEREOF

(51) International classification :F02M
(31) Priority Document No :NA
(32) Priority Date :NA
(33) Name of priority country :NA
(86) International Application No :NA
Filing Date :NA
(87) International Publication No : NA
(61) Patent of Addition to Application Number :NA
Filing Date :NA
(62) Divisional to Application Number :NA
Filing Date :NA

(71)**Name of Applicant :**
1)COUNCIL OF SCIENTIFIC & INDUSTRIAL RESEARCH
Address of Applicant :ANUSANDHAN BHAWAN, RAFI MARG, NEW DELHI - 110 001, INDIA. Delhi India
(72)**Name of Inventor :**
1)NAVIN CHAND

(57) Abstract :
The present invention provides a composition based on Fly ash cenospheres useful for making wood substitute comprising jute fibre cloth layers, cenospheres of fly ash, thermosetting resin, diluents and additives. The present invention also provides a method of preparation of above said composition useful for making wood substitute. The wood substitute so produced can be used for making panels, doors etc.

No. of Pages : 13 No. of Claims : 9

(12) PATENT APPLICATION PUBLICATION
(21) Application No.548/DEL/2014 A
(19) INDIA
(22) Date of filing of Application :27/02/2014
(43) Publication Date : 28/08/2015

(54) Title of the invention : NANOBRUSHES AND METHODS OF MANUFACTURE AND USE

(51) International classification :A46B
(31) Priority Document No :NA
(32) Priority Date :NA
(33) Name of priority country :NA
(86) International Application No :NA
Filing Date :NA
(87) International Publication No : NA
(61) Patent of Addition to Application Number :NA
Filing Date :NA
(62) Divisional to Application Number :NA
Filing Date :NA

(71)**Name of Applicant :**
1)INDIAN INSTITUTE OF TECHNOLOGY KANPUR
Address of Applicant :Kanpur, Uttar Pradesh, 208016, India Delhi India
(72)**Name of Inventor :**
1)RAMAKRISHNA SUBRAMANIAM ANANTHA
2)JHUMA DUTTA

(57) Abstract :
Nanobrushes, methods of forming nanobrushes, and methods of altering material with a nanobrush are disclosed herein. A nanobrush may include a substrate having a surface and a plurality of bristles deposited on at least one portion of the surface. The plurality of bristles may be arranged into a plurality of bunches. Each of the plurality of bunches may be spaced from an adjacent bunch at a bunch interval equal to or less than about 100 µm.

No. of Pages : 32 No. of Claims : 10

(12) PATENT APPLICATION PUBLICATION
(21) Application No.852/DEL/2012 A
(19) INDIA
(22) Date of filing of Application :23/03/2012
(43) Publication Date : 28/08/2015

(54) Title of the invention : CONVEYING DEVICE FOR POWDERY AND/OR GRANULATED MATERIAL

(51) International classification	:B23B
(31) Priority Document No	:11160510.1
(32) Priority Date	:30/03/2011
(33) Name of priority country	:EUROPEAN UNION
(86) International Application No	:NA
Filing Date	:NA
(87) International Publication No	:NA
(61) Patent of Addition to Application Number	:NA
Filing Date	:NA
(62) Divisional to Application Number	:NA
Filing Date	:NA

(71)**Name of Applicant :**
1)BAYER MATERIALSCIENCE AG
Address of Applicant :51368 LEVERKUSEN, GERMANY, Germany
(72)**Name of Inventor :**
1)HERBERT UNGERECHTS
2)HANS-JORG FRANK
3)MARKUS HAGEDORN

(57) Abstract :
A conveying device for free-flowing fine-particle solids (bulk material), in particular for powdery and/or granular (mixed) material, especially plastic granulate, includes a vertically arranged and flexibly mountable pipe for the conveyance of, preferably, polymer granulates, for example in a plant for the filling of polymer granulates. The transport pipe may be included on a mobile work platform.

No. of Pages : 16 No. of Claims : 13

(12) PATENT APPLICATION PUBLICATION
(21) Application No.853/DEL/2012 A
(19) INDIA
(22) Date of filing of Application :23/03/2012
(43) Publication Date : 28/08/2015

(54) Title of the invention : MOBIEL CLASSIFIER

(51) International classification	:H04N
(31) Priority Document No	:11160512.7
(32) Priority Date	:30/03/2011
(33) Name of priority country	:EUROPEAN UNION
(86) International Application No	:NA
Filing Date	:NA
(87) International Publication No	:NA
(61) Patent of Addition to Application Number	:NA
Filing Date	:NA
(62) Divisional to Application Number	:NA
Filing Date	:NA

(71)**Name of Applicant :**
1)BAYER MATERIALSCIENCE AG
Address of Applicant :51368 LEVERKUSEN, GERMANY, Germany
(72)**Name of Inventor :**
1)HERBERT UNGERECHTS
2)HANS-JORG FRANK
3)DIETER SCHOLTEN
4)JURGEN JANSSEN
5)MARKUS HAGEDORN

(57) Abstract :
A mobile classifier (deduster) has docking devices, flushing devices and control for the dedusting of granules, in particular polymer granules, with preference polycarbonate granules. The mobile classifier can be set up at different locations underneath silos. To perform its function, the mobile classifier is technically connected to stationary pipelines, filters and fans.

No. of Pages : 9 No. of Claims : 13

(12) PATENT APPLICATION PUBLICATION
(21) Application No.2746/DELNP/2015 A
(19) INDIA
(22) Date of filing of Application :03/04/2015
(43) Publication Date : 28/08/2015

(54) Title of the invention : EXTENSION CARRIER FOR ARQ

(51) International classification :H04L1/18
(31) Priority Document No :13/633226
(32) Priority Date :02/10/2012
(33) Name of priority country :U.S.A.
(86) International Application No :PCT/IB2013/058864
Filing Date :25/09/2013
(87) International Publication No :WO 2014/053960
(61) Patent of Addition to Application Number :NA
Filing Date :NA
(62) Divisional to Application Number :NA
Filing Date :NA

(71)**Name of Applicant :**
1)TELEFONAKTIEBOLAGET L M ERICSSON (PUBL)
Address of Applicant :S- 164 83 Stockholm Sweden
(72)**Name of Inventor :**
1)KHAYRALLAH, Ali, S.;
2)CHENG, Jung- Fu

(57) Abstract :
In a wireless communication network (10), HARQ acknowledgements, re - transmissions , and related signaling (e.g. channel quality reports) are performed on a Re- transmission Extension Carrier ,REC ,separate from the primary downlink traffic carrier(s). In various embodiments , the REC may comprise an aggregated wireless communication network channel ,which may be cross- channel scheduled or may have its own scheduler. The REC may be Frequency Domain Duplex , FDD, or Time Domain Duplex , TDD, The REC may be dedicated to a main downlink carrier, or may be shared across a plurality of aggregated component carriers. The REC may be transmitted from the same base station (14) as one or more associated main carriers , or from a different base station (14). A shared REC may be operated in cooperative or contention modes. The REC may be implemented in unlicensed spectrum.

No. of Pages : 39 No. of Claims : 32

(12) PATENT APPLICATION PUBLICATION
(21) Application No.2747/DELNP/2015 A
(19) INDIA
(22) Date of filing of Application :03/04/2015
(43) Publication Date : 28/08/2015

(54) Title of the invention : FILM STRUCTURES FOR SELF LOCKING NONWOVEN INDUSTRIAL TEXTILE

(51) International classification :B32B3/30,B32B3/06,B32B38/06
(31) Priority Document No :2791864
(32) Priority Date :04/10/2012
(33) Name of priority country :Canada
(86) International Application No :PCT/CA2013/000842
Filing Date :01/10/2013
(87) International Publication No :WO 2014/053055
(61) Patent of Addition to Application Number :NA
Filing Date :NA
(62) Divisional to Application Number :NA
Filing Date :NA

(71)**Name of Applicant :**
1)ASTENJOHNSON, INC.
Address of Applicant :4399 Corporate Road, Charleston South ,Carolina 29405 U.S.A.
2)MANNINEN, Allan R.
(72)**Name of Inventor :**
1)MANNINEN ,Allan R.

(57) Abstract :
A profiled film structure textiles comprising at least two layers of the structure , and methods of making the structure and textiles. Each film layer is profiled with regularly arranged protrusions , separated by planar land areas. Portions of at least one side wall of the protrusions are slit to create apertures extending through the film and top members forming coplanar latching means extending over the apertures. When the upper surface of a first layer of the film is brought into contiguous relationship with the upper surface of a second layer of the film and the protrusions of each of the respective layers are aligned between adjacent protrusions of the other layer , the latching means of each layer are received and retained within the apertures of the opposing layer , resulting in an efficiently assembled self- locking structure having selectable permeability for fluid flow through the structure.

No. of Pages : 47 No. of Claims : 47

(12) PATENT APPLICATION PUBLICATION
(21) Application No.3796/DELNP/2012 A
(19) INDIA
(22) Date of filing of Application :01/05/2012
(43) Publication Date : 28/08/2015

(54) Title of the invention : PERMANENT MAGNET DIRECT DRIVE DRAWWORKS

(51) International classification :E02F 5/04
(31) Priority Document No :12/643,439
(32) Priority Date :21/12/2009
(33) Name of priority country :U.S.A.
(86) International Application No :PCT/US2010/060943
Filing Date :17/12/2010
(87) International Publication No :WO 2011/084669
(61) Patent of Addition to Application Number :NA
Filing Date :NA
(62) Divisional to Application Number :NA
Filing Date :NA

(71)**Name of Applicant :**
1)KEVIN R. WILLIAMS
Address of Applicant :P.O BOX 1359, CYPRESS, TX 77410-1359, U.S.A. U.S.A.
(72)**Name of Inventor :**
1)KEVIN R. WILLIAMS

(57) Abstract :
A direct drive drawworks (100) has a permanent magnet motor (40), a shaft (41) extending from the permanent magnet motor (40) so that the permanent magnet motor directly rotates the shaft (41), and a drum (43) connected to the shaft (41) away from the permanent magnet motor (40) such that the rotation of the shaft causes a corresponding rotation of the drum. The permanent magnet motor (40) has a housing (42), a stator (62) positioned in the housing, and a rotor (64) cooperative with the stator. The rotor (64) has a drive plate (66) affixed thereto. The shaft (41) is directly connected to the drive plate (66). A bearing housing (45) rotatably supports the shaft.

No. of Pages : 22 No. of Claims : 20

(12) PATENT APPLICATION PUBLICATION
(21) Application No.836/DEL/2012 A
(19) INDIA
(22) Date of filing of Application :22/03/2012
(43) Publication Date : 28/08/2015

(54) Title of the invention : ISOLATION AND PURIFICATION OF SHIKIMIC ACID FROM PLANT SOURCES

(51) International classification :A61K
(31) Priority Document No :NA
(32) Priority Date :NA
(33) Name of priority country :NA
(86) International Application No :NA
Filing Date :NA
(87) International Publication No :NA
(61) Patent of Addition to Application Number :NA
Filing Date :NA
(62) Divisional to Application Number :NA
Filing Date :NA

(71)**Name of Applicant :**
1)INDIAN COUNCIL OF MEDICAL RESEARCH
Address of Applicant :V. RAMALINGASWAMI BHAWAN, ANSARI NAGAR, NEW DELHI-110029 Delhi India
(72)**Name of Inventor :**
1)RAMCHANDRA V. GADRE
2)HIREKODATHAKALLU V. THULASIRAM
3)KRUNAL H. PATEL
4)SAMIKSHA A. BHAGAT

(57) Abstract :
This invention relates to a process for the isolation and purification of shikimic acid from plant sources.

No. of Pages : 19 No. of Claims : 10

(12) PATENT APPLICATION PUBLICATION
(21) Application No.2523/DELNP/2012 A
(19) INDIA
(22) Date of filing of Application :22/03/2012
(43) Publication Date : 28/08/2015

(54) Title of the invention : HOUSING BASE FOR AN ELECTRICAL CONNECTOR

(51) International classification :H01R 43/20
(31) Priority Document No :12/581,613
(32) Priority Date :19/10/2009
(33) Name of priority country :U.S.A.
(86) International Application No :PCT/US2010/002774
Filing Date :18/10/2010
(87) International Publication No :WO 2011/049610
(61) Patent of Addition to Application Number :NA
Filing Date :NA
(62) Divisional to Application Number :NA
Filing Date :NA

(71)**Name of Applicant :**
1)TYCO ELECTRONICS CORPORATION
Address of Applicant :1050 WESTLAKES DRIVE, BERWYN, PENNSYLVANIA 19312, UNITED STATES OF AMERICA U.S.A.
(72)**Name of Inventor :**
1)DOWHOWER, KENNETH PAUL
2)DOUTY, GEORGE HAROLD
3)MCALONIS, MATTHEW RICHARD

(57) Abstract :
An electrical connector system (10) includes a header connector (14) that includes a header housing (24) and a header contact. The header housing (24) includes a header base (26) and a header shroud (30) extending from the header base (26). The header base (26) includes a header contact opening. The header contact is held by the header base (26) within the header contact opening. The system (10) also includes a receptacle connector (12) configured to mate with the header connector (14). The receptacle connector (12) includes a receptacle housing (22) and a receptacle contact that engages the header contact when the header and receptacle connectors (14, 12) are mated together. The receptacle housing (22) includes a receptacle base (26) and a receptacle shroud (28) extending from the receptacle base (26). The receptacle base (26) includes a receptacle contact opening. The receptacle contact is held by the receptacle base (26) within the receptacle contact opening. The receptacle contact opening has a common size and shape to the header contact opening.

No. of Pages : 27 No. of Claims : 10

(12) PATENT APPLICATION PUBLICATION
(19) INDIA
(22) Date of filing of Application :22/03/2012
(21) Application No.2524/DELNP/2012 A
(43) Publication Date : 28/08/2015

(54) Title of the invention : LEAVEN-BASED MIXTURE

(51) International classification :A21D 8/04
(31) Priority Document No :09171506.0
(32) Priority Date :28/09/2009
(33) Name of priority country :EUROPEAN UNION
(86) International Application No :PCT/EP2010/064333
Filing Date :28/09/2010
(87) International Publication No :WO 2011//036304
(61) Patent of Addition to Application Number :NA
Filing Date :NA
(62) Divisional to Application Number :NA
Filing Date :NA

(71)**Name of Applicant :**
1)WORESAN GMBH
Address of Applicant :HAUPTSTRASSE 56B, 30916 ISERNHAGEN, GERMANY Germany
(72)**Name of Inventor :**
1)WOLF, GABRIELE

(57) Abstract :
A mixture obtainable by a process comprising the following steps: a) adding a culture comprising sprouted rye grains and water to a rye fine or coarse meal and subjecting the mixture to a process of heating to 30-34 °C within 3 to 5 hours, a strong maltose formation being initiated from enzy¬matic reactions; b) followed by a further addition of rye fine or coarse meal, water and a bacteriological inoculum from the group of heterofermentative lactic-acid bacteria; c) acidifying the mixture until the metabolic activity of the microorganisms ceases, and optionally pasteurizing at 90-95 °C; d) separating the mixture by centrifugation into a solution and a precipitate, after which the solution is optionally filtered at least once.

No. of Pages : 11 No. of Claims : 10

(12) PATENT APPLICATION PUBLICATION
(21) Application No.2748/DELNP/2015 A
(19) INDIA
(22) Date of filing of Application :03/04/2015
(43) Publication Date : 28/08/2015

(54) Title of the invention : AXIALLY ALIGNED ELECTRONIC CHASSIS

(51) International classification :H05K7/20,H05K1/00,H05K5/00
(31) Priority Document No :61/697711
(32) Priority Date :06/09/2012
(33) Name of priority country :U.S.A.
(86) International Application No :PCT/US2013/058544
Filing Date :06/09/2013
(87) International Publication No :WO 2014/039845
(61) Patent of Addition to Application Number :NA
Filing Date :NA
(62) Divisional to Application Number :NA
Filing Date :NA

(71)**Name of Applicant :**
1)PI -CORAL ,INC.
Address of Applicant :2130 Gold St., Suite 200, San Jose, California 95002 U.S.A.
(72)**Name of Inventor :**
1)STEPHENS, Donpaul C ;

(57) Abstract :
A technique for housing printed circuit board assemblies (PCAs) includes providing a set of backplane or midplane boards that are oriented orthogonally and edge- to- edge with an array of PCAs such that air introduced at one end of the chassis passes in a straight line course through the PCAs and through the backplane or midplane boards with no substantial bends or changes in direction.

No. of Pages : 24 No. of Claims : 21

(12) PATENT APPLICATION PUBLICATION
(21) Application No.2749/DELNP/2015 A
(19) INDIA
(22) Date of filing of Application :03/04/2015
(43) Publication Date : 28/08/2015

(54) Title of the invention : REDUCING CROSSTALK IN BOARD- TO -BOARD ELECTRONIC COMMUNICATION

(51) International classification :G06F13/40,H04L5/16
(31) Priority Document No :61/697711
(32) Priority Date :06/09/2012
(33) Name of priority country :U.S.A.
(86) International Application No :PCT/US2013/058645
Filing Date :06/09/2013
(87) International Publication No :WO 2014/039924
(61) Patent of Addition to Application Number :NA
Filing Date :NA
(62) Divisional to Application Number :NA
Filing Date :NA

(71)**Name of Applicant :**
1)PI -CORAL ,INC.
Address of Applicant :2130 Gold St., Suite 200, San Jose, CA 95002 U.S.A.
(72)**Name of Inventor :**
1)BAETZ, Albert, G.;
2)STEPHENS, Donpaul, C ;

(57) Abstract :
A technique for communicating electronic signals between circuit boards includes separating conductive traces for carrying TX signals from those for carrying RX signals and conveying the separated TX and RX signals between circuit boards on respective sets of distinct midplane circuit board layers. The layers may be distinct circuit board layers on a single board or distinct layers on different boards.

No. of Pages : 28 No. of Claims : 20

(12) PATENT APPLICATION PUBLICATION
(21) Application No.835/DEL/2012 A
(19) INDIA
(22) Date of filing of Application :22/03/2012
(43) Publication Date : 28/08/2015

(54) Title of the invention : POWER TRAIN LINKAGES TO ENHANCE LIFE OF ACTUATING LEVER

(51) International classification :B23B
(31) Priority Document No :NA
(32) Priority Date :NA
(33) Name of priority country :NA
(86) International Application No :NA
Filing Date :NA
(87) International Publication No :NA
(61) Patent of Addition to Application Number :NA
Filing Date :NA
(62) Divisional to Application Number :NA
Filing Date :NA

(71)**Name of Applicant :**
1)ESCORTS LIMITED
Address of Applicant :AGRI MACHINERY GROUP, 18/4, MATHURA ROAD, FARIDABAD 121007 (INDIA) Haryana India
(72)**Name of Inventor :**
1)J.G. TRIVEDI
2)LOVEDEEP SINGH
3)NEERAJ VIJ

(57) Abstract :
Improved power train linkages to enhance life of actuating lever This invention relates to improved power train linkages to enhance life of actuating lever comprising of Hydraulic cylinder, Piston, Connecting rod, Actuating lever, Serration shaft and Lift Arms wherein hydraulic oil is pumped by hydraulic pump into the Hydraulic cylinder, which generates a hydraulic thrust on piston, reciprocating movement of which generates force on the connecting rod provided between said piston and actuating lever mounted over the serration shaft in which rotation of the shaft causes rotation of lift arms, wherein length of splines of the lever is reduced from the face with offset and length of plane diameter is increased by the same extent in the mating part of the lever with serration shaft.

No. of Pages : 17 No. of Claims : 4

(12) PATENT APPLICATION PUBLICATION
(21) Application No.854/DEL/2012 A
(19) INDIA
(22) Date of filing of Application :23/03/2012
(43) Publication Date : 28/08/2015

(54) Title of the invention : DISPLAY DEVICE

(51) International classification :H03G
(31) Priority Document No :2011076568
(32) Priority Date :30/03/2011
(33) Name of priority country :Japan
(86) International Application No :NA
Filing Date :NA
(87) International Publication No :NA
(61) Patent of Addition to Application Number :NA
Filing Date :NA
(62) Divisional to Application Number :NA
Filing Date :NA

(71)**Name of Applicant :**
1)SONY CORPORATION
Address of Applicant :1-7-1 KONAN, MINATO-KU, TOKYO, 108-0075, JAPAN Japan
(72)**Name of Inventor :**
1)TAKEAKI HIRASAWA

(57) Abstract :
A display device includes: a casing configured by at least one chassis; a display arranged inside the casing; a light guiding plate arranged on a rear face side of the display and has an outer peripheral face at least a part of which is formed as an incident face on which light is incident; a light source unit including a light source arranged to face the incident face of the light guiding plate on a lateral side of the light guiding plate; and a heat dissipating member, to which the light source unit is attached, that dissipates heat generated when the light source is driven. Tthe heat dissipating member or the light source unit is attached to the light guiding plate, and the heat dissipating member and the light source unit can be moved with respect to the chassis in accordance with expansion or shrinkage of the light guiding plate.

No. of Pages : 44 No. of Claims : 7

(12) PATENT APPLICATION PUBLICATION
(21) Application No.3820/DELNP/2012 A
(19) INDIA
(22) Date of filing of Application :01/05/2012
(43) Publication Date : 28/08/2015

(54) Title of the invention : SPUTTERING TARGET AND METHOD FOR PRODUCING THE SAME

(51) International classification :C23C 14/34
(31) Priority Document No :2009-255540
(32) Priority Date :06/11/2009
(33) Name of priority country :Japan
(86) International Application No :PCT/JP2010/006481
Filing Date :04/11/2010
(87) International Publication No :WO 2011/055537
(61) Patent of Addition to Application Number :NA
Filing Date :NA
(62) Divisional to Application Number :NA
Filing Date :NA

(71)**Name of Applicant :**
1)MITSUBISHI MATERIALS CORPORATION
Address of Applicant :3-2, OTEMACHI 1-CHOME, CHIYODA-KU, TOKYO 1008117 JAPAN Japan
(72)**Name of Inventor :**
1)ZHANG, SHOUBIN
2)SHIRAI, YOSHINORI

(57) Abstract :
The sputtering target is provided wherein 20 to 40 at% of Ga and 0.05 to 1 at% of Na are contained as metal components except fluorine (F) of the sputtering target, a remaining portion has a component composition consisting of Cu and unavoidable impurities, and Na is contained in the state of a NaF compound. Also, a method for producing the sputtering target includes the steps of forming a molded article consisting of a mixed powder of NaF powder and Cu-Ga powder or a mixed powder of NaF powder, Cu-Ga powder, and Cu powder; and sintering the molded article in a vacuum atmosphere, an inert gas atmosphere, or a reducing atmosphere.

No. of Pages : 36 No. of Claims : 9

(12) PATENT APPLICATION PUBLICATION
(21) Application No.524/DEL/2014 A
(19) INDIA
(22) Date of filing of Application :25/02/2014
(43) Publication Date : 28/08/2015

(54) Title of the invention : SALT (SCHEMATIC ANALYSIS OF LANGUAGE THROUGH TOPOLOGY)

(51) International classification :H04N
(31) Priority Document No :NA
(32) Priority Date :NA
(33) Name of priority country :NA
(86) International Application No :NA
Filing Date :NA
(87) International Publication No : NA
(61) Patent of Addition to Application Number :NA
Filing Date :NA
(62) Divisional to Application Number :NA
Filing Date :NA

(71)**Name of Applicant :**
1)DRAFT N CRAFT LEGAL OUTSOURCING PVT. LTD. THROUGH ITS DIRECTOR MR. RAKESH K. SHARMA
Address of Applicant :F-26/1 SHANKAR MARKET, CONNAUGHT PLACE, NEW DELHI-110001, INDIA Delhi India
(72)**Name of Inventor :**
1)RAKESH K. SHARMA-DIRECTOR, DRAFT N CRAFT LEGAL OUTSOURCHING PVT. LTD.
2)JAGRITI MISHRA

(57) Abstract :
The present invention relates to a method and system of identification and extraction of information/text through schematic demarcation by using floating macroblocks from any electronic document. Firstly, an encoder divides an electronic page into floating macroblocks. The layout, word - line - paragraph structure, spelling, punctuation, syntax, treatment, text formatting, paragraph formatting, unformatted text, images etc. of the portion of the electronic document falling within each macroblock becomes intact and interrelated. Then the encoder draws gridlines across the length of the page. The encoder then gives page number to each page in case of an electronic document having multiple pages. By the present invention, information and text in an electronic document can be easily indentified, divided into visible and/or invisible macroblocks, given various treatments, and can also be held intact during the conversion/OCR process.

No. of Pages : 13 No. of Claims : 5

(12) PATENT APPLICATION PUBLICATION
(21) Application No.553/DEL/2014 A
(19) INDIA
(22) Date of filing of Application :27/02/2014
(43) Publication Date : 28/08/2015

(54) Title of the invention : CARBOXYMETHYL KATIRA GEL AND A PROCESS FOR PREPARATION THEREOF

(51) International classification	:A61K31/352,	(71)**Name of Applicant :**
(31) Priority Document No	:NA	**1)COUNCIL OF SCIENTIFIC & INDUSTRIAL RESEARCH**
(32) Priority Date	:NA	Address of Applicant :ANUSANDHAN BHAWAN, RAFI MARG,
(33) Name of priority country	:NA	NEW DELHI - 110001, INDIA. Delhi India
(86) International Application No	:NA	(72)**Name of Inventor :**
Filing Date	:NA	**1)RANA VIKAS**
(87) International Publication No	: NA	**2)REKHI K. DAMANJEET**
(61) Patent of Addition to Application Number	:NA	**3)SINGH KULDEEP**
Filing Date	:NA	**4)KAMBOJ SUNIL**
(62) Divisional to Application Number	:NA	**5)RAY PALLAB**
Filing Date	:NA	

(57) Abstract :
The present invention pertains to a process for preparing carboxymethyl katira gel. Further, the process did not involve conventional heating step that sometimes leads to degradation of katira gum. The optimum proportion of alkali and microwave assisted steps provided in the invention leads to high yield with 0.5 degree of substitution of carboxymethyl katira gel. In addition, the developed carboxymethyl katira gel is advantageous in treating S. aureus induced superficial skin infections in animal model.

No. of Pages : 36 No. of Claims : 7

(12) PATENT APPLICATION PUBLICATION
(21) Application No.2535/DELNP/2012 A
(19) INDIA
(22) Date of filing of Application :23/03/2012
(43) Publication Date : 28/08/2015

(54) Title of the invention : DISULFIDE STABILISED MULTIVALENT ANTIBODIES

(51) International classification :C07K 16/46
(31) Priority Document No :PCT/GB2009/002310
(32) Priority Date :25/09/2009
(33) Name of priority country :U.K.
(86) International Application No :PCT/GB2010/001803
Filing Date :24/09/2010
(87) International Publication No :WO 2011/036460
(61) Patent of Addition to Application Number :NA
Filing Date :NA
(62) Divisional to Application Number :NA
Filing Date :NA

(71)**Name of Applicant :**
1)UCB PHARMA S.A.
Address of Applicant :60 ALLEE DE LA RECHERCHE, B-1070 BRUSSELS, BELGIUM Belgium
(72)**Name of Inventor :**
1)RALPH ADAMS
2)LAURA HANCOCK
3)SAM PHILIP HEYWOOD

(57) Abstract :
A multivalent antibody fusion protein which comprises an immunoglobulin moiety, for example a Fab or Fab' fragment, with a first specificity for an antigen of interest, and further comprises two single domain antibodies (dAb) with specificity for a second antigen of interest which are a VH/VL pair, wherein the two single domain antibodies are linked by a disulfide bond. Also provided are particular dual specificity antibody fusion proteins and other antibody fragments which are stabilised by a disulfide bond.

No. of Pages : 188 No. of Claims : 20

(12) PATENT APPLICATION PUBLICATION
(19) INDIA
(22) Date of filing of Application :23/03/2012
(21) Application No.2537/DELNP/2012 A
(43) Publication Date : 28/08/2015

(54) Title of the invention : METHOD FOR PERFORMING HANDOVER, USER EQUIPMENT, BASE STATION, AND RADIO COMMUNICATION SYSTEM

(51) International classification :H04W 36/28
(31) Priority Document No :2009-250806
(32) Priority Date :30/10/2009
(33) Name of priority country :Japan
(86) International Application No :PCT/JP2010/063180
Filing Date :04/08/2010
(87) International Publication No :WO 2011/052275
(61) Patent of Addition to Application Number :NA
Filing Date :NA
(62) Divisional to Application Number :NA
Filing Date :NA

(71)**Name of Applicant :**
1)SONY CORPORATION
Address of Applicant :1-7-1 KONAN, MINATO-KU, TOKYO 108-0075, JAPAN Japan
(72)**Name of Inventor :**
1)YUICHI MORIOKA
2)HIROAKI TAKANO
3)RYO SAWAI

(57) Abstract :
Provided is a method for performing a handover from a first base station to a second base station by a user equipment that is performing a radio communication over a communication channel formed by aggregating a plurality of component carriers. The method includes a step of transmitting a handover command for a component carrier for which a handover has been approved by the second base station among the plurality of component carriers from the first base station to the user equipment and a step of trying to make an access from the user equipment to the second base station for each component carrier in response to the handover command. Representative Drawing

FIG.8A

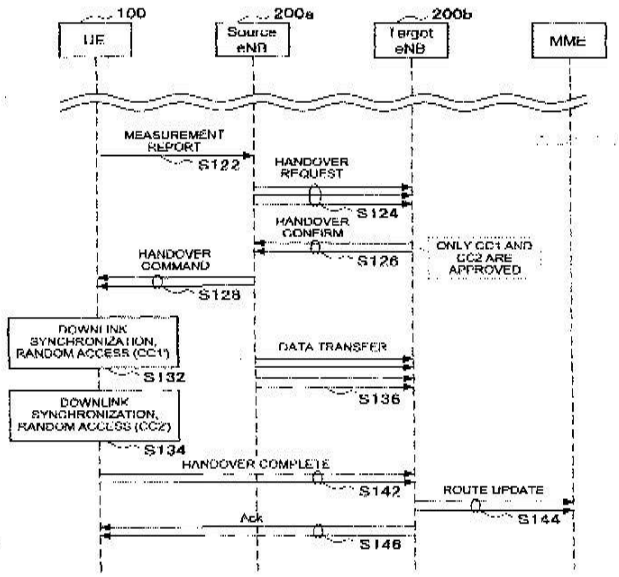

No. of Pages : 51 No. of Claims : 11

(12) PATENT APPLICATION PUBLICATION
(21) Application No.855/DEL/2012 A
(19) INDIA
(22) Date of filing of Application :23/03/2012
(43) Publication Date : 28/08/2015

(54) Title of the invention : MAGNETIC DEVICE WITH WEAKLY EXCHANGE COUPLED ANTIFERROMAGNETIC LAYER

(51) International classification :B23B
(31) Priority Document No :13/070,249
(32) Priority Date :23/03/2011
(33) Name of priority country :U.S.A.
(86) International Application No :NA
Filing Date :NA
(87) International Publication No :NA
(61) Patent of Addition to Application Number :NA
Filing Date :NA
(62) Divisional to Application Number :NA
Filing Date :NA

(71)**Name of Applicant :**
1)HONEYWELL INTERNATIONAL INC.
Address of Applicant :101 COLUMBIA ROAD, P.O. BOX 2245, MORRISTOWN, NEW JERSEY 07962-2245, UNITED STATES OF AMERICA U.S.A.
(72)**Name of Inventor :**
1)ROMNEY R. KATTI

(57) Abstract :
A magnetic device is provided in one example that comprises a free layer having a magnetic anisotropy. The magnetic anisotropy is at least partially non¬uniform. The magnetic device further comprises an antiferromagnetic layer adjacent to and weakly exchange coupled with the free layer, wherein the weak exchange coupling reduces the non-uniformity of the magnetic anisotropy of the free layer.

No. of Pages : 23 No. of Claims : 10

(12) PATENT APPLICATION PUBLICATION
(19) INDIA
(22) Date of filing of Application :03/04/2015
(21) Application No.2753/DELNP/2015 A
(43) Publication Date : 28/08/2015

(54) Title of the invention : METHOD AND APPARATUS FOR WATER TREATMENT USING SCREENS

(51) International classification :C02F3/12
(31) Priority Document No :61/703844
(32) Priority Date :21/09/2012
(33) Name of priority country :U.S.A.
(86) International Application No :PCT/US2013/060962
Filing Date :20/09/2013
(87) International Publication No :WO 2014/047459
(61) Patent of Addition to Application Number :NA
Filing Date :NA
(62) Divisional to Application Number :NA
Filing Date :NA

(71)**Name of Applicant :**
1)D.C. WATER & SEWER AUTHORITY
Address of Applicant :5000 Overlook Avenue, SW, Washington ,DC 20032 U.S.A.
(72)**Name of Inventor :**
1)MURTHY, Sudhir, N.;
2)GIRALDO, Eugenio;
3)DOCKETT, Norman, D.;
4)DE CLIPPELEIR, Haydee;
5)WETT, Bernhard;
6)BAILEY, Walter, F.;

(57) Abstract :
An apparatus and method for selecting , retaining or bioaugmenting solids in an activated sludge process for improving wastewater treatment using screens. The screens can be used to separate and retain solids based on size , compressibility or shear resistance. The screens are used to separate and select slow growing organisms, faster settling organisms, or materials added to absorb , treat or remove constituents in the activated sludge process. A swapping screen arrangement provides another means of selecting various particles. The exposed shear rate or time , particle compression ,or SRTs can be adjusted manually and/or automatically in response to detected readings from an instrument such as a spectrophotometer or other optical approaches to optimize selection of organisms.

No. of Pages : 31 No. of Claims : 20

(12) PATENT APPLICATION PUBLICATION
(21) Application No.2754/DELNP/2015 A
(19) INDIA
(22) Date of filing of Application :03/04/2015
(43) Publication Date : 28/08/2015

(54) Title of the invention : VERTICAL AXIS WIND TURBINE

(51) International classification :F03D3/06,F03D3/02,F03D7/06
(31) Priority Document No :12 59673
(32) Priority Date :10/10/2012
(33) Name of priority country :France
(86) International Application No :PCT/EP2013/070888
Filing Date :08/10/2013
(87) International Publication No :WO 2014/056875
(61) Patent of Addition to Application Number :NA
Filing Date :NA
(62) Divisional to Application Number :NA
Filing Date :NA

(71)**Name of Applicant :**
1)THOMAS, Pierre Armand
Address of Applicant :23 ,rue Louis Pouey, F- 92800 Puteaux France
(72)**Name of Inventor :**
1)THOMAS, Pierre Armand

(57) Abstract :
The device (10) comprises a base (11), a hollow mast (12) mounted on the base (12) along a vertical axis (Z), and at least one module (13) able to rotate about the mast (12). Said module (13) comprises at least one flap (18) that can be moved about a pivot connection (26) between a retracted position and a deployed position , and means (40) for moving the flap (18) between its deployed and retracted positions according to the angular position of this flap (18) about the mast (12). A shaft (15) positioned inside the hollow mast (12) rotates as one with this module (13) and collaborates with a converter (17) that converts the mechanical energy of rotation of the shaft (15) into said mechanical or electrical energy.

No. of Pages : 21 No. of Claims : 16

(12) PATENT APPLICATION PUBLICATION
(21) Application No.3805/DELNP/2012 A
(19) INDIA
(22) Date of filing of Application :01/05/2012
(43) Publication Date : 28/08/2015

(54) Title of the invention : CONTROL METHOD FOR A WIND TURBINE

(51) International classification :F03D 7/04
(31) Priority Document No :PA 2009 1106
(32) Priority Date :08/10/2009
(33) Name of priority country :Denmark
(86) International Application No :PCT/EP2010/064666
Filing Date :01/10/2010
(87) International Publication No :WO 2011/042369
(61) Patent of Addition to Application Number :NA
Filing Date :NA
(62) Divisional to Application Number :NA
Filing Date :NA

(71)**Name of Applicant :**
1)VESTAS WIND SYSTEMS A/S
Address of Applicant :HEDEAGER 44 8200 AARHUS N DENMARK. Denmark
(72)**Name of Inventor :**
1)ANDERSEN, ASGER SVENNING
2)THOMSEN, JESPER SANDBERG
3)MIRANDA, ERIK CARL LEHNSKOV
4)ABDALLAH, IMAD
5)CHRISTENSEN, POUL BRANDT
6)ZAIB, ALI
7)BACHMANN, THOMAS TVILUM

(57) Abstract :
The invention relates to a method of controlling a wind turbine having a rotor with pitchable wind turbine blades and a generator for producing power, where a control signal for a controllable parameter of the wind turbine is determined, and an operational parameter representing a loading on the wind turbine exerted by the wind is estimated at time intervals. From this is determined a variation parameter reflecting the variation of the operational parameter over time. The wind turbine is then controlled according to the control signal only if the variation parameter is below an alert threshold, and otherwise according to a modified control strategy.

No. of Pages : 40 No. of Claims : 16

(12) PATENT APPLICATION PUBLICATION
(21) Application No.837/DEL/2012 A
(19) INDIA
(22) Date of filing of Application :22/03/2012
(43) Publication Date : 28/08/2015

(54) Title of the invention : PVA SUPPORTED RESINS FOR ARSENIC SEPARATION AND THE PRODUCT THEREOF

(51) International classification	:C07C	(71)**Name of Applicant :**
(31) Priority Document No	:NA	**1)INDIAN INSTITUTE OF TECHNOLOGY DELHI**
(32) Priority Date	:NA	Address of Applicant :INDIAN INSTITUTE OF TECHNOLOGY
(33) Name of priority country	:NA	DELHI HAUZ KHAS NEW DELHI-110016 Delhi India
(86) International Application No	:NA	(72)**Name of Inventor :**
Filing Date	:NA	**1)BHUVANESH GUPTA**
(87) International Publication No	:NA	**2)SAIQA IKRAM**
(61) Patent of Addition to Application Number	:NA	**3)SADIYA ANJUM**
Filing Date	:NA	
(62) Divisional to Application Number	:NA	
Filing Date	:NA	

(57) Abstract :
The present invention relates to PVA (Polyvinyl Alcohol) supported resins for arsenic separation and the product thereof - a chelating material for the arsenite removal from water, in particular, the derivation of cross-linked thiolated PVA from various routes and their application in specific arsenite separating process.

No. of Pages : 57 No. of Claims : 9

(12) PATENT APPLICATION PUBLICATION
(21) Application No.3809/DELNP/2012 A
(19) INDIA
(22) Date of filing of Application :01/05/2012
(43) Publication Date : 28/08/2015

(54) Title of the invention : ADSORPTION OF CONTAMINANTS FROM LIQUID AND ELECTROCHEMICAL REGENERATION OF ADSORBENT

(51) International classification	:C02F 1/467	(71)**Name of Applicant :**
(31) Priority Document No	:0919413.5	**1)ARVIA TECHNOLOGY LIMITED**
(32) Priority Date	:05/11/2009	Address of Applicant :DARESBURY INNOVATION CENTER,
(33) Name of priority country	:U.K.	KECKWICK LANE, DARESBURY WA 4 4FS (GB) U.K.
(86) International Application No	:PCT/GB2010/002027	(72)**Name of Inventor :**
Filing Date	:03/11/2010	**1)ROBERTS, EDWARD P.L.**
(87) International Publication No	:WO 2011/058298	**2)BROWN, NIGEL WILLIS**
(61) Patent of Addition to Application Number	:NA	
Filing Date	:NA	
(62) Divisional to Application Number	:NA	
Filing Date	:NA	

(57) Abstract :
A method for the treatment of a liquid. The method comprises contacting the liquid within a treatment zone with an adsorbent material, which is then electrochemically regenerated within a regeneration zone following contact with said liquid. A disinfectant precursor species is provided within the regeneration zone and then electrochemically converted to a disinfectant species which can then contact adsorbent material and/or liquid within the regeneration zone effecting in-situ disinfection and resulting in the presence of residual disinfectant species in the treated liquid. There is further provided apparatus for carrying out such a method.

No. of Pages : 20 No. of Claims : 27

(12) PATENT APPLICATION PUBLICATION
(21) Application No.856/DEL/2012 A
(19) INDIA
(22) Date of filing of Application :23/03/2012
(43) Publication Date : 28/08/2015

(54) Title of the invention : MOBILE STAR WHEEL FEEDER

(51) International classification	:B23B
(31) Priority Document No	:11160511.9
(32) Priority Date	:30/03/2011
(33) Name of priority country	:EUROPEAN UNION
(86) International Application No	:NA
Filing Date	:NA
(87) International Publication No	:NA
(61) Patent of Addition to Application Number	:NA
Filing Date	:NA
(62) Divisional to Application Number	:NA
Filing Date	:NA

(71)**Name of Applicant :**
1)BAYER MATERIALSCIENCE AG
Address of Applicant :51368 LEVERKUSEN, GERMANY, Germany
(72)**Name of Inventor :**
1)HERBERT UNGERECHTS
2)HANS-JORG FRANK
3)DIETER SCHOLTEN
4)JURGEN JANSSEN
5)MARKUS HAGEDORN

(57) Abstract :
A mobile star wheel feeder includes docking devices, flushing devices and control for the pneumatic conveyance of granules, in particular polymer granules, with preference polycarbonate granules. The mobile star wheel feeder, together with partially mobile sections of pipeline, can be set up at different locations underneath silos.

No. of Pages : 15 No. of Claims : 17

(12) PATENT APPLICATION PUBLICATION
(21) Application No.102/MUM/2014 A
(19) INDIA
(22) Date of filing of Application :13/01/2014
(43) Publication Date : 28/08/2015

(54) Title of the invention : INNOVATIVE METHOD OF EMISSION REDUCTION OF DIESEL ENGINE USING CERIUM OXIDE AS A FUEL ADDITIVE

(51) International classification	:C10L10/02, C10L1/12
(31) Priority Document No	:NA
(32) Priority Date	:NA
(33) Name of priority country	:NA
(86) International Application No	:NA
Filing Date	:NA
(87) International Publication No	: NA
(61) Patent of Addition to Application Number	:NA
Filing Date	:NA
(62) Divisional to Application Number	:NA
Filing Date	:NA

(71)**Name of Applicant :**
1)NANDEDKAR VILAS M
Address of Applicant :DEPARTMENT OF PRODUCTION ENGINEERING, SGGS, COLLEGE OF ENGINEERING AND TECHNOLOGY, VISHNUPURI, NANDED-431606, MAHARASHTRA (INDIA) Maharashtra India
(72)**Name of Inventor :**
1)INGLE SUMEDH S
2)NANDEDKAR VILAS M

(57) Abstract :
Metal Oxide nanoparticles are used as additive with fuel, to form a mixture, for an internal combustion engine. The mixture is stirred, heated and pumped to a combustion chamber of the internal combustion engine and ignited for combustion, Measured Emissions after combustion were reduced by more than 30% by use of metal oxide nanoparticle additive.

No. of Pages : 9 No. of Claims : 6

(12) PATENT APPLICATION PUBLICATION
(19) INDIA
(22) Date of filing of Application :13/01/2014
(21) Application No.116/MUM/2014 A
(43) Publication Date : 28/08/2015

(54) Title of the invention : SEAT RECLINING APPARATUS

(51) International classification	:B60N2/22, A47C1/025, B60N2/235
(31) Priority Document No	:NA
(32) Priority Date	:NA
(33) Name of priority country	:NA
(86) International Application No	:NA
Filing Date	:NA
(87) International Publication No	: NA
(61) Patent of Addition to Application Number	:NA
Filing Date	:NA
(62) Divisional to Application Number	:NA
Filing Date	:NA

(71)**Name of Applicant :**
1)SHIROKI CORPORATION
Address of Applicant :2, KIRIHARA-CHO, FUJISAWA-SHI, KANAGAWA, 252-0811, JAPAN Japan
(72)**Name of Inventor :**
1)HIGASHI NOBUMASA
2)MAEDA NORIAKI
3)SASAKI KAZUTAKA

(57) Abstract :
A seat reclining apparatus includes a base plate, a ratchet plate, guide grooves formed on the base plate, lock members installed in the guide grooves and guided thereby between engaged and disengaged positions, a first cam positioned between the base plate and the ratchet plate and rotates relative thereto by an operation of an operating member between locked and unlocked positions, and a single second cam which presses one of the lock members to the engaged position by receiving a force from the first cam when the first cam rotates from the unlocked position to the locked position, wherein the single second cam is positioned in one of the guide grooves that serves as a second-cam accommodating guide groove, and the single second cam can come in sliding contact with an inner surface of the one of the guide grooves.

Fig. 1

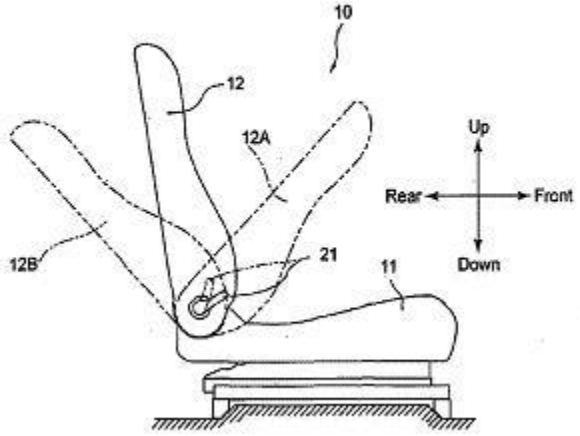

No. of Pages : 45 No. of Claims : 1

(12) PATENT APPLICATION PUBLICATION
(19) INDIA
(22) Date of filing of Application :15/01/2014

(21) Application No.140/MUM/2014 A
(43) Publication Date : 28/08/2015

(54) Title of the invention : A METHOD AND SYSTEM FOR SALE MANAGEMENT

(51) International classification	:H04N 21/00, H04N 7/00	(71)**Name of Applicant :** **1)WHATS ON INDIA MEDIA PRIVATE LIMITED** Address of Applicant :3RD FLOOR, B WING, TODI ESTATE, SUN MILL COMPOUND, LOWER PAREL (W), MUMBAI 400013, MAHARASHTRA, INDIA Maharashtra India
(31) Priority Document No	:NA	
(32) Priority Date	:NA	(72)**Name of Inventor :**
(33) Name of priority country	:NA	**1)ATUL PHADNIS**
(86) International Application No	:NA	
Filing Date	:NA	
(87) International Publication No	: NA	
(61) Patent of Addition to Application Number	:NA	
Filing Date	:NA	
(62) Divisional to Application Number	:NA	
Filing Date	:NA	

(57) Abstract :
TITLE : A METHOD AND SYSTEM FOR SALE MANAGEMENT A method and system for sale management is disclosed. The method and system enhance the service provider™s ability to sell channels and packs to the users, by delivering user-preferences driven recommendations to service providers (108) as well as to users. The system and method thereof disclosed herein enables the service providers (108) and broadcaster to increase subscription and inturn increase sell by recommendations. The system, when operated in accordance with an example method, enables a user to receive recommendations as per his preference of viewership, enables the service provider to provide recommendations based on the user activity reflecting his preferences and thus increase the subscriptions and inturn the sale with minimum efforts. Ref. Fig. 2

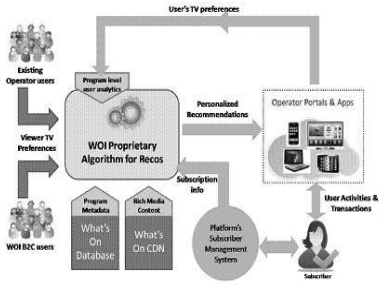

Fig. 1

No. of Pages : 44 No. of Claims : 20

(12) PATENT APPLICATION PUBLICATION
(21) Application No.188/MUM/2014 A
(19) INDIA
(22) Date of filing of Application :21/01/2014
(43) Publication Date : 28/08/2015

(54) Title of the invention : PROCESS FOR PREPARING SOLID ORAL PHARMACEUTICAL COMPOSITIONS COMPRISING TICAGRELOR OR SALTS THEREOF

(51) International classification	:A61K31/519, A61K9/20
(31) Priority Document No	:NA
(32) Priority Date	:NA
(33) Name of priority country	:NA
(86) International Application No	:NA
Filing Date	:NA
(87) International Publication No	: NA
(61) Patent of Addition to Application Number	:NA
Filing Date	:NA
(62) Divisional to Application Number	:NA
Filing Date	:NA

(71)**Name of Applicant :**
1)WOCKHARDT LIMITED
Address of Applicant :D-4, MIDC Area, Chikalthana, Aurangabad Maharashtra India
(72)**Name of Inventor :**
1)Naidu, Venkataramana
2)Attarde, Pankaj Umakant
3)Mehta, Navneet
4)Jain,Girish Kumar

(57) Abstract :
The present invention relates to process for preparing solid oral pharmaceutical compositions comprising ticagrelor or salts thereof. In particular, the present invention relates to a process for preparing solid oral pharmaceutical compositions comprising ticagrelor or salts thereof and at least one pharmaceutically acceptable excipient other than water-insoluble fillers. There is also provided a method of reducing the rate of thrombotic cardiovascular events in patients with acute coronary syndrome (ACS) by using the composition ticagrelor or salts thereof.

No. of Pages : 18 No. of Claims : 9

(12) PATENT APPLICATION PUBLICATION
(19) INDIA
(22) Date of filing of Application :21/01/2014

(21) Application No.198/MUM/2014 A
(43) Publication Date : 28/08/2015

(54) Title of the invention : MODIFIED RELEASE TABLET OF PREGABALIN.

(51) International classification	:A61K31/197, A61K9/22, A61K47/38, A61K	(71)**Name of Applicant :** **1)Intas Pharmaceuticals Ltd.** Address of Applicant :Intas Pharmaceuticals Ltd. 2nd Floor, Chinubhai Centre, Ashram Road, Ahmedabad 380009 Gujarat India
(31) Priority Document No	:NA	(72)**Name of Inventor :**
(32) Priority Date	:NA	**1)Ashish Sehgal**
(33) Name of priority country	:NA	**2)Umesh Setty**
(86) International Application No	:NA	**3)Nilesh Patel**
Filing Date	:NA	
(87) International Publication No	: NA	
(61) Patent of Addition to Application Number	:NA	
Filing Date	:NA	
(62) Divisional to Application Number	:NA	
Filing Date	:NA	

(57) Abstract :
The present invention relates to a modified release tablet comprising pregabalin with at least one low-density excipient, at least one swelling agent and at least one gelling agent, wherein the modified release tablet substantially maintains its hydrodynamic balance and physical integrity for the time period during which the drug is released into the stomach.

ABSTRACT

The present invention relates to a modified release tablet comprising pregabalin with at least one low-density excipient, at least one swelling agent and at least one gelling agent, wherein the modified release tablet substantially maintains its hydrodynamic balance and physical integrity for the time period during which the drug is released into the stomach.

No. of Pages : 13 No. of Claims : 10

(12) PATENT APPLICATION PUBLICATION
(21) Application No.108/MUM/2014 A
(19) INDIA
(22) Date of filing of Application :13/01/2014
(43) Publication Date : 28/08/2015

(54) Title of the invention : ANTI-LOOSENING DEVICE

(51) International classification	:H01R4/30, H01R11/12, F16B39/26, F16B3	(71)**Name of Applicant :** **1)AMW MOTORS LTD** Address of Applicant :7TH FLOOR, TOWER 1, EQUINOX BUSINESS PARK, PENINSULA TECHNO PARK, OFF BANDRA KURLA COMPLEX, LBS MARG, KURLA (WEST), MUMBAI-400 070, MAHARASHTRA, INDIA. Maharashtra India
(31) Priority Document No	:NA	
(32) Priority Date	:NA	
(33) Name of priority country	:NA	(72)**Name of Inventor :** **1)MR. PINKESH B. PATEL** **2)MR. S. MUTHUKKUMAR**
(86) International Application No	:NA	
Filing Date	:NA	
(87) International Publication No	: NA	
(61) Patent of Addition to Application Number	:NA	
Filing Date	:NA	
(62) Divisional to Application Number	:NA	
Filing Date	:NA	

(57) Abstract :
When an automobile vehicle is subjected to extreme vibrations (Hilly terrain with winding & bad roads) certain fastener joints get loosened and necessitate frequent retightening. Sometimes safety of occupants as well as other road users is seriously affected if nut loosening is not spotted in time. Objective of the invention is to find a mechanism that will prevent loosening of fasteners even during adverse operating conditions. The foregoing paragraph give details ofAnti-loosening Device invented. The invention basically makes use of two opposite hand fasteners tightened in series is preventing loosening. The figure below shows Anti-loosening Device. The special bolt has two different types of threads. Major portion has one hand thread and end portion has opposite hand thread. The master nut is fitted on the above special bolt and torque applied. The locking ring - nut mounted on end portion of special bolt having opposite hand thread, is tightened until it engages with master nut surface. When master nut tries to loosen for various reasons, the loosening direction tightens the locking ring - nut, thus preventing loosening. This enables effective fastener retention.

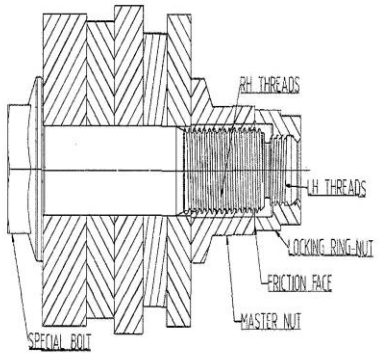

No. of Pages : 7 No. of Claims : 3

(12) PATENT APPLICATION PUBLICATION
(21) Application No.165/MUM/2014 A
(19) INDIA
(22) Date of filing of Application :17/01/2014
(43) Publication Date : 28/08/2015

(54) Title of the invention : A PROCESS FOR THE SYNTHESIS OF N-(ARYL)-3-OXO-3-PHENYLPROPANAMIDE DERIVATIVES AND THEIR ANTILEUKEMIC ACTIVITY.

(51) International classification	:A61K31	(71)**Name of Applicant :**
(31) Priority Document No	:NA	**1)M.M.V. RAMANA**
(32) Priority Date	:NA	Address of Applicant :DEPT. OF CHEMISTRY, UNIVERSITY OF MUMBAI, VIDYANAGARI, SANTACRUZ (EAST), MUMBAI-400 098, MAHARASHTRA, INDIA. Maharashtra India
(33) Name of priority country	:NA	
(86) International Application No	:NA	
Filing Date	:NA	(72)**Name of Inventor :**
(87) International Publication No	: NA	**1)M.M.V. RAMANA**
(61) Patent of Addition to Application Number	:NA	**2)R.S.LOKHANDE**
Filing Date	:NA	**3)MEHTA ANKITA LAXMAN**
(62) Divisional to Application Number	:NA	
Filing Date	:NA	

(57) Abstract :
The present invention relates to the synthesis of small molecules showing cytostatic/cytotoxic potential against leukemia. Study relates to a process for the preparation of N-(aryl)-3-oxo-3-phenylpropanamide derivatives and their anti leukemic activity.

No. of Pages : 14 No. of Claims : 12

(12) PATENT APPLICATION PUBLICATION
(21) Application No.185/MUM/2014 A
(19) INDIA
(22) Date of filing of Application :21/01/2014
(43) Publication Date : 28/08/2015

(54) Title of the invention : SOLID ORAL PHARMACEUTICAL COMPOSITIONS COMPRISING FIXED DOSE COMBINATION OF METFORMIN AND LINAGLIPTIN OR SALTS THEREOF

(51) International classification	:A61K31/403, A61K9/5078
(31) Priority Document No	:NA
(32) Priority Date	:NA
(33) Name of priority country	:NA
(86) International Application No	:NA
Filing Date	:NA
(87) International Publication No	: NA
(61) Patent of Addition to Application Number	:NA
Filing Date	:NA
(62) Divisional to Application Number	:NA
Filing Date	:NA

(71)**Name of Applicant :**
1)WOCKHARDT LIMITED
Address of Applicant :D-4, MIDC Area, Chikalthana, Aurangabad Maharashtra India
(72)**Name of Inventor :**
1)Naidu, Venkataramana
2)Wagh, Balasaheb Parshuram
3)Krishna Mohan L.
4)Jain, Girish Kumar

(57) Abstract :
The present invention relates to solid oral pharmaceutical composition comprising metformin and linagliptin or salt thereof. In particular, the present invention relates to solid oral stable pharmaceutical composition comprising fixed dose combination of metformin and linagliptin or salt thereof. By using an alkalizer, it is possible to achieve the stable pharmaceutical composition of metformin and linagliptin. The invention further relates to use of such composition in the treatment of diabetes mellitus. A method for the preparation of such composition is also described.

No. of Pages : 22 No. of Claims : 8

(12) PATENT APPLICATION PUBLICATION
(21) Application No.195/MUM/2014 A
(19) INDIA
(22) Date of filing of Application :21/01/2014
(43) Publication Date : 28/08/2015

(54) Title of the invention : A PROCESS FOR PREPARATION OF (2S, 5R)-6-SULPHOOXY-7-OXO-2-[((3R)-PIPERIDINE-3-CARBONYL)-HYDRAZINOCARBONYL]-1,6-DIAZA-BICYCLO[3.2.1] OCTANE

(51) International classification	:C07D239/72, C07D401/14, A61K31/517, C	(71)**Name of Applicant :** **1)WOCKHARDT LIMITED** Address of Applicant :WOCKHARDT LIMITED D-4, MIDC Area, Chikalthana, Aurangabad Maharashtra India
(31) Priority Document No	:NA	(72)**Name of Inventor :**
(32) Priority Date	:NA	**1)Joshi, Sanjeev**
(33) Name of priority country	:NA	**2)Jadhav, Sunil Bhaginath**
(86) International Application No	:NA	**3)Rane, Vipul**
Filing Date	:NA	**4)Bhawsar,Satish**
(87) International Publication No	: NA	**5)Deshpande, Prasad Keshav**
(61) Patent of Addition to Application Number	:NA	**6)Yeole, Ravindra Dattatraya**
Filing Date	:NA	**7)Patel,Mahesh Vithalbhai**
(62) Divisional to Application Number	:NA	
Filing Date	:NA	

(57) Abstract :
A process for preparation of compound of Formula (I) is disclosed.

No. of Pages : 22 No. of Claims : 14

(12) PATENT APPLICATION PUBLICATION
(21) Application No.205/MUM/2014 A
(19) INDIA
(22) Date of filing of Application :21/01/2014
(43) Publication Date : 28/08/2015

(54) Title of the invention : PHARMACEUTICAL COMPOSITIONS OF MESALAMINE SUPPOSITORIES

(51) International classification :A61K31
(31) Priority Document No :NA
(32) Priority Date :NA
(33) Name of priority country :NA
(86) International Application No :NA
Filing Date :NA
(87) International Publication No : NA
(61) Patent of Addition to Application Number :NA
Filing Date :NA
(62) Divisional to Application Number :NA
Filing Date :NA

(71)**Name of Applicant :**
1)CADILA HEALTHCARE LIMITED
Address of Applicant :ZYDUS TOWER, SATELLITE CROSS ROAD, AHMEDABAD - 380015, GUJARAT, INDIA Gujarat India
(72)**Name of Inventor :**
1)SEN NILENDU
2)SHENOY SANDHYA RAJENDRA
3)GHOGARI IMRAN SHAKOOR

(57) Abstract :
PHARMACEUTICAL COMPOSITIONS OF MESALAMINE SUPPOSITORIES • The present invention relates to pharmaceutical compositions of mesalamine suppositories. In particular, the invention relates to pharmaceutical suppositories comprising mesalamine or salts thereof and at least two oily or fatty bases. The invention also relates to processes for the preparation of such compositions and use thereof for treatment of ulcerative colitis or ulcerative proctitis.

No. of Pages : 20 No. of Claims : 10

(12) PATENT APPLICATION PUBLICATION
(21) Application No.130/MUM/2014 A
(19) INDIA
(22) Date of filing of Application :15/01/2014
(43) Publication Date : 28/08/2015

(54) Title of the invention : METHOD AND ASSESSMENT OF FUNCTIONAL DAMAGE IN SPINAL CORD INJURY

(51) International classification	:A61B5/103, A61B5/055
(31) Priority Document No	:NA
(32) Priority Date	:NA
(33) Name of priority country	:NA
(86) International Application No	:NA
Filing Date	:NA
(87) International Publication No	: NA
(61) Patent of Addition to Application Number	:NA
Filing Date	:NA
(62) Divisional to Application Number	:NA
Filing Date	:NA

(71)**Name of Applicant :**
1)DR. PATIL AJITKUMAR GORAKHANATH
Address of Applicant :2, SHANTA ASHISH 'C', IRLA LANE, VILE PARLE (WEST), MUMBAI-400 056, MAHARASHTRA, INDIA. Maharashtra India
(72)**Name of Inventor :**
1)DR. PATIL AJITKUMAR GORAKHANATH

(57) Abstract :
The present invention relates to method for assessment of functional damage in spinal cord injury (SCI). At present there is no method that can measure functional damage to autonomic nervous systems in spina/ cord injured persons. There has been tremendous increase in number of spinal cord injured (SCI) patients around the world due to variety of reasons. Considering this, a method has been invented to bring out a relation between functional damage to autonomic nervous system and R-R variability. The method uses R-R intervals derived from ECG or any universally available procedure. The R-R interval responses are recorded in two different modes or positions: sitting and five seconds deep respiration. In each mode, at a time 150 seconds R-R interval data is acquired. The R-R time series spectra! pattern has three distinct frequency regions; a very low frequency (VLF) band, a low frequency (LF) band and a high frequency (HF) band. Two independent indices StB and DbB are calculated from spectral plots. Damage to autonomic nervous system due to spinal cord injury is calculated using functional efficiency factor ROR. Component values are in percentage between 0 and 100

No. of Pages : 12 No. of Claims : 4

(12) PATENT APPLICATION PUBLICATION
(19) INDIA
(22) Date of filing of Application :17/01/2014

(21) Application No.167/MUM/2014 A
(43) Publication Date : 28/08/2015

(54) Title of the invention : ORTHOPAEDIC TURN BUCKLE SPLINT

(51) International classification	:A61F5/04, A61F5/058
(31) Priority Document No	:NA
(32) Priority Date	:NA
(33) Name of priority country	:NA
(86) International Application No	:NA
Filing Date	:NA
(87) International Publication No	: NA
(61) Patent of Addition to Application Number	:NA
Filing Date	:NA
(62) Divisional to Application Number	:NA
Filing Date	:NA

(71)**Name of Applicant :**
1)AMRUTLAL DEVSHIBHAI CHUDASAMA
Address of Applicant :OPP. S.T.DEPOT, JAMNAGAR - 361005, GUJARAT Gujarat India
(72)**Name of Inventor :**
1)AMRUTLAL DEVSHIBHAI CHUDASAMA

(57) Abstract :
An orthopaedic turn buckle splint to correct contracture of elbow or vokmans contracture works on. Three point fixation mechanism in which revetting on plastic material to protect against undue force while correcting. The turn buckle splint adjust angle of the splint upto maximum possible extension of writst or elbow. The turn buckle is capable to extend elbow or wrist upto tolerange. The turn buckle splint corrects soft tissues fastly.

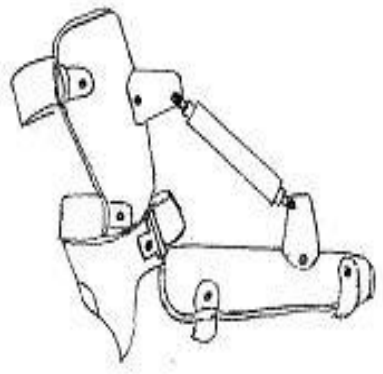

No. of Pages : 13 No. of Claims : 4

(12) PATENT APPLICATION PUBLICATION
(19) INDIA
(22) Date of filing of Application :17/10/2014
(21) Application No.2084/MUMNP/2014 A
(43) Publication Date : 28/08/2015

(54) Title of the invention : PROJECTION MODULE FOR A MOTOR VEHICLE

(51) International classification :F21S8/10,F21V7/07,F21S8/12
(31) Priority Document No :A50093/2012
(32) Priority Date :21/03/2012
(33) Name of priority country :Austria
(86) International Application No :PCT/AT2013/050069
Filing Date :20/03/2013
(87) International Publication No :WO 2013/138834
(61) Patent of Addition to Application Number :NA
Filing Date :NA
(62) Divisional to Application Number :NA
Filing Date :NA

(71)**Name of Applicant :**
1)ZIZALA LICHTSYSTEME GMBH
Address of Applicant :Scheibbser Strae 17 A 3250 Wieselburg Austria Austria
(72)**Name of Inventor :**
1)BAUER Friedrich
2)KIESLINGER Dietmar
3)MOSER Andreas
4)RAUCH Marcel
5)SCHLINGER Thomas

(57) Abstract :
The invention relates to a light module (1) for a motor vehicle comprising at least one light source (1 10 11 100 110) at least one reflector (2 20 21 200 210 2000) and at least one lens (3 30 31 300 310) wherein the light emitted by said light source (1 10 11 100 110) is formed into a light distribution by a reflecting surface (2a 20a 21a 22a 200a 210a 2000a) of the at least one reflector (2 20 21 200 210 2000) and when said light module (1) is fitted in a vehicle is projected via the at least one lens (3 30 31 300 310) into an area in front of the vehicle. According to the invention the reflecting surface (2a 20a 21a 22a 200a 210a 2000a) of the at least one reflector (2 20 21 200 210 2000) is formed in such a way that a first focal point (F1) of said reflector (2 20 21 200 210 2000) is located between the reflecting surface (2a 20a 21a 22a 200a 210a 2000a) and the at least one lens (3 30 31 300 310) and a second focal point (F2) is located on the side of the reflector (2 20 21 200 210 2000) facing away from the lens (3 30 31 300 310) wherein the reflecting surface (2a 20a 21a 22a 200a 210a 2000a) of the reflector (2 20 21 200 210 2000) is designed in such a way that the light pattern generated comprises at least one light dark line.

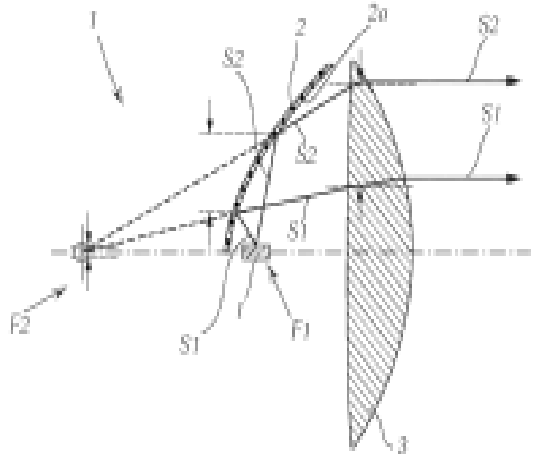

Fig. 1

No. of Pages : 29 No. of Claims : 13

(12) PATENT APPLICATION PUBLICATION
(19) INDIA
(22) Date of filing of Application :13/01/2014

(21) Application No.117/MUM/2014 A
(43) Publication Date : 28/08/2015

(54) Title of the invention : ESTIMATION OF DIRECTION OF MOTION OF USERS ON MOBILE DEVICES

(51) International classification	:G06K9/00, G01P15/02
(31) Priority Document No	:NA
(32) Priority Date	:NA
(33) Name of priority country	:NA
(86) International Application No	:NA
Filing Date	:NA
(87) International Publication No	: NA
(61) Patent of Addition to Application Number	:NA
Filing Date	:NA
(62) Divisional to Application Number	:NA
Filing Date	:NA

(71)**Name of Applicant :**
1)TATA CONSULTANCY SERVICES LIMITED
Address of Applicant :Nirmal Building, 9th Floor, Nariman Point, Mumbai, Maharashtra 400021 Maharashtra India
(72)**Name of Inventor :**
1)GHOSE, Avik
2)KUMAR, Abhinav
3)BHAUMIK, Chirabrata
4)PAL, Arpan

(57) Abstract :
A mobile device and a method for estimation of direction of motion of a user are described. In one embodiment, the mobile device (100) comprises an inertial sensor (112) to capture acceleration signals based on motion of the user, and a direction estimation module (120) to determine direction of gravity based on filtering acceleration values obtained from captured the acceleration signals using a low-pass filter to identify a plane orthogonal to the direction of gravity. The plane orthogonal to the gravity comprises two orthogonal axes orthogonal to the direction of gravity. Along the two orthogonal axes, displacement values are evaluated based on a user input for placement of the mobile device (100) with respect to user™s body, and integration of the acceleration values across the two orthogonal axes with respect to time. Based on the displacement values, a direction of motion of the user is estimated based on a ratio of the displacement values along the two orthogonal axes.

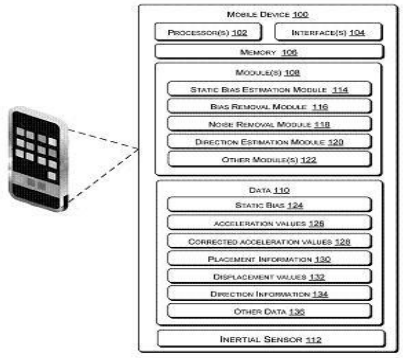

Figure 1(a)

No. of Pages : 22 No. of Claims : 15

(12) PATENT APPLICATION PUBLICATION
(21) Application No.125/MUM/2014 A
(19) INDIA
(22) Date of filing of Application :14/01/2014
(43) Publication Date : 28/08/2015

(54) Title of the invention : SPRAYABLE IN SITU GEL FORMING WOUND DRESSING

(51) International classification :A61L26/00
(31) Priority Document No :NA
(32) Priority Date :NA
(33) Name of priority country :NA
(86) International Application No :NA
Filing Date :NA
(87) International Publication No : NA
(61) Patent of Addition to Application Number :NA
Filing Date :NA
(62) Divisional to Application Number :NA
Filing Date :NA

(71)**Name of Applicant :**
1)Hitendra S Mahajan
Address of Applicant :R.C.Patel Institute of Pharmaceutical Education and Research Shirpur-425405 Maharashtra India
(72)**Name of Inventor :**
1)Hitendra S Mahajan
2)Mr. Manish M Bharuka
3)Mr. Pankaj P Nerkar
4)Dr. Sanjay J Surana

(57) Abstract :
The present invention relates to the methods for the development of novel, cost effective, propellant free in situ gel forming formulation with a sprayable wound dressing system based on xyloglucan which is a biodegradable natural polymer for effectual management of wounds. The dressing comprises in situ gel system having an antimicrobial agent incorporated into polymeric solution. When sprayed on wound it absorbs wound fluid and slowly releases its water-soluble anti microbial agent into the wound. Following invention is described in detail with the help of Figure 1 of sheet 1 which shows scanning electron microscopic photograph of resultant gel with dressing like structure.

No. of Pages : 13 No. of Claims : 10

(12) PATENT APPLICATION PUBLICATION
(19) INDIA
(22) Date of filing of Application :17/01/2014

(21) Application No.160/MUM/2014 A
(43) Publication Date : 28/08/2015

(54) Title of the invention : THERMOFORMABLE POLYOLEFIN COMPOSITIONS

(51) International classification :C08F255/02
(31) Priority Document No :NA
(32) Priority Date :NA
(33) Name of priority country :NA
(86) International Application No :NA
Filing Date :NA
(87) International Publication No : NA
(61) Patent of Addition to Application Number :2860/MUM/2010
Filed on :14/10/2010
(62) Divisional to Application Number :NA
Filing Date :NA

(71)**Name of Applicant :**
1)RELIANCE INDUSTRIES LIMITED
Address of Applicant :3RD FLOOR, MAKER CHAMBER-IV 222, NARIMAN POINT, MUMBAI- 400 021, MAHARASHTRA, INDIA Maharashtra India
(72)**Name of Inventor :**
1)SATPATHY UMA SANKAR
2)MATHUR AJIT BEHARI

(57) Abstract :
The present disclosure provides a thermoformable composition, prepared by melt kneading, which includes a homogenous mixture of at least two polyfunctional acrylate monomers dispersed uniformly through a polyolefin matrix having at least one organic peroxide in an amount less than 50 ppm. The melt flow index (MFI) of the thermoformable composition of the present disclosure ranges between 0.10 g/10 min and 10 g/10 min. A process for the preparation of the thermoformable composition is also provided in the present disclosure that involves mixing a polyolefin matrix with at least two polyfunctional acrylate monomers and at least one organic peroxide; homogenizing the admixture, followed by kneading the homogenized admixture to obtain the thermoformable composition.

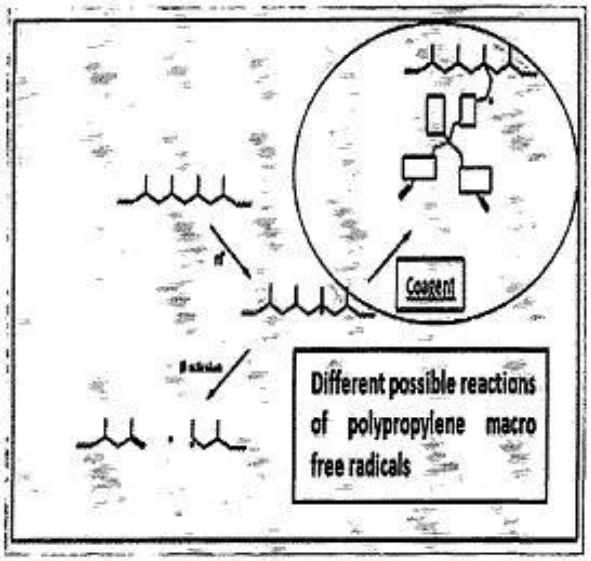

Figure 1

No. of Pages : 30 No. of Claims : 27

(12) PATENT APPLICATION PUBLICATION
(21) Application No.2094/MUM/2014 A
(19) INDIA
(22) Date of filing of Application :27/06/2014
(43) Publication Date : 28/08/2015

(54) Title of the invention : RECLINER FOR MOTOR VEHICLE HAVING WEDGE

(51) International classification	:B60N2/235
(31) Priority Document No	:10-2013-0077391
(32) Priority Date	:02/07/2013
(33) Name of priority country	:Republic of Korea
(86) International Application No	:PCT//
Filing Date	:01/01/1900
(87) International Publication No	: NA
(61) Patent of Addition to Application Number	:NA
Filing Date	:NA
(62) Divisional to Application Number	:NA
Filing Date	:NA

(71)**Name of Applicant :**
1)KM&I. CO., LTD.
Address of Applicant :614, Baekbeom-ro, Seo-gu, Incheon 404-817 Republic of Korea Republic of Korea
(72)**Name of Inventor :**
1)HUR, Chang Bum
2)KIM, Byung Su
3)JEONG, Kyung Shin

(57) Abstract :
Provided is a recliner for a motor vehicle having a wedge capable of controlling an inclination angle of a back of a vehicle seat, and more particularly, to a recliner for a vehicle having a wedge capable of improving clearance and strength of the recliner.

No. of Pages : 61 No. of Claims : 19

(12) PATENT APPLICATION PUBLICATION
(19) INDIA
(22) Date of filing of Application :15/01/2014

(21) Application No.134/MUM/2014 A
(43) Publication Date : 28/08/2015

(54) Title of the invention : CONTROL SYSTEM FOR MULTI-PHASE ROTARY MACHINES

(51) International classification :H02P27/00
(31) Priority Document No :1305034.9
(32) Priority Date :19/03/2013
(33) Name of priority country :GB
(86) International Application No :NA
Filing Date :NA
(87) International Publication No : NA
(61) Patent of Addition to Application Number :NA
Filing Date :NA
(62) Divisional to Application Number :NA
Filing Date :NA

(71)**Name of Applicant :**
1)CONTROL TECHNIQUES LTD
Address of Applicant :THE GRO, POOL ROAD, NEWTOWN SY16 3BE UNITED KINGDOM U.K.
(72)**Name of Inventor :**
1)HART SIMON DAVID

(57) Abstract :
A method and a control system for a multiphase-phase inverter system, the control system comprising an electric current detection circuit and a processor, wherein each phase of an electrical cycle is separated into a plurality of sections, inputs from the electric current detection circuit are received, each input indicating a measured phase current, and a phase current is calculated in each section, wherein the phase current calculation in at least one of the sections is determined from a changing ratio of the value of the phase current calculated from the measured values of the other phase currents in the multiphase system and the measured value of the phase.

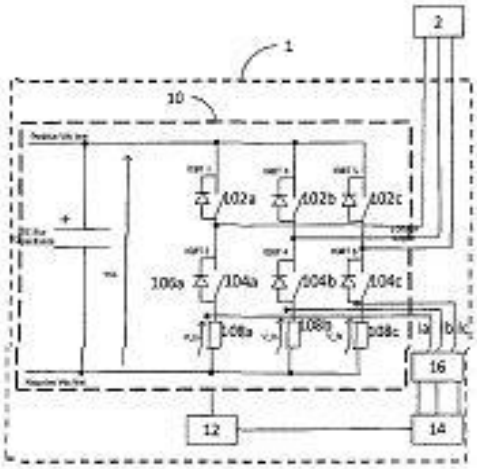

Fig. 1

No. of Pages : 24 No. of Claims : 14

(12) PATENT APPLICATION PUBLICATION
(19) INDIA
(22) Date of filing of Application :20/01/2014
(21) Application No.171/MUM/2014 A
(43) Publication Date : 28/08/2015

(54) Title of the invention : AN IMPROVED PROCESS FOR THE PREPARATION OF GEFITINIB

(51) International classification	:C07D295/092, C07D239/94
(31) Priority Document No	:NA
(32) Priority Date	:NA
(33) Name of priority country	:NA
(86) International Application No	:NA
Filing Date	:NA
(87) International Publication No	: NA
(61) Patent of Addition to Application Number	:NA
Filing Date	:NA
(62) Divisional to Application Number	:NA
Filing Date	:NA

(71)**Name of Applicant :**
1)ALEMBIC PHARMACEUTICALS LIMITED
Address of Applicant :Alembic Research Centre, Alembic Pharmaceuticals Limited , Alembic Road, Vadodara-390003. Gujarat, India. Gujarat India
(72)**Name of Inventor :**
1)DHAMELIYA, Dharmesh
2)KOLHE, Sandeep
3)KONDEPATI, Venkata Ramana
4)JAYARAMAN, Venkat Raman

(57) Abstract :
The present invention relates to a novel process for the synthesis of Gefitinib.

No. of Pages : 24 No. of Claims : 10

(12) PATENT APPLICATION PUBLICATION
(21) Application No.191/MUM/2014 A
(19) INDIA
(22) Date of filing of Application :21/01/2014
(43) Publication Date : 28/08/2015

(54) Title of the invention : SOLID ORAL PHARMACEUTICAL COMPOSITIONS COMPRISING TICAGRELOR OR SALTS THEREOF

(51) International classification	:A61K31/403, A61K9/5078
(31) Priority Document No	:NA
(32) Priority Date	:NA
(33) Name of priority country	:NA
(86) International Application No	:NA
Filing Date	:NA
(87) International Publication No	: NA
(61) Patent of Addition to Application Number	:NA
Filing Date	:NA
(62) Divisional to Application Number	:NA
Filing Date	:NA

(71)**Name of Applicant :**
1)WOCKHARDT LIMITED
Address of Applicant :D-4, MIDC Area, Chikalthana, Aurangabad Maharashtra India
(72)**Name of Inventor :**
1)Naidu, Venkataramana
2)Attarde, Pankaj Umakant
3)Mehta, Navneet
4)Jain,Girish Kumar

(57) Abstract :
The present invention relates to solid oral pharmaceutical compositions comprising ticagrelor or salts thereof. In particular, the present invention relates to a composition comprising ticagrelor or salts thereof in an amount less than 20 % of the weight of total composition and at least one pharmaceutically acceptable excipient. The invention further relates to method of reducing the rate of thrombotic cardiovascular events in patients with acute coronary syndrome (ACS) by using the composition ticagrelor or salts thereof.

No. of Pages : 19 No. of Claims : 9

(12) PATENT APPLICATION PUBLICATION
(21) Application No.201/MUM/2014 A
(19) INDIA
(22) Date of filing of Application :21/01/2014
(43) Publication Date : 28/08/2015

(54) Title of the invention : METHOD FOR FACILITATING INDOOR ULTRA FAST COMMUNICATION USING VISIBLE LIGHT COMMUNICATION SIGNAL, RADIO SIGNAL AND FREE SPACE OPTICAL LASER SIGNAL

(51) International classification	:H04B10/11, H04B10/00	(71)**Name of Applicant :**
(31) Priority Document No	:NA	**1)AMIT KUMAR JAIN**
(32) Priority Date	:NA	Address of Applicant :F/1402, ROYAL CLASSIC BUILDING, LINK ROAD, ANDHERI (WEST)-400 053, MAHARASHTRA, INDIA. Maharashtra India
(33) Name of priority country	:NA	
(86) International Application No	:NA	(72)**Name of Inventor :**
Filing Date	:NA	**1)AMIT KUMAR JAIN**
(87) International Publication No	: NA	
(61) Patent of Addition to Application Number	:NA	
Filing Date	:NA	
(62) Divisional to Application Number	:NA	
Filing Date	:NA	

(57) Abstract :
The present invention is a method for facilitating indoor ultra-fast wireless communication by establishing a downlink and an uplink for data transfer using visible light signal, radio signal and free space optical laser signal. The present invention overcomes the short comings of indoor data transfer using light by implementing other media along with light through which data may be transferred, providing an ultra fast, uninterrupted and efficient uplink and downlink for data transfer. The method provides for switching from one media to another, according to the best available connection means. The method involves using a novel combination and interfacing of laser signals, radio signals, optical fiber signals and light as media for communication.

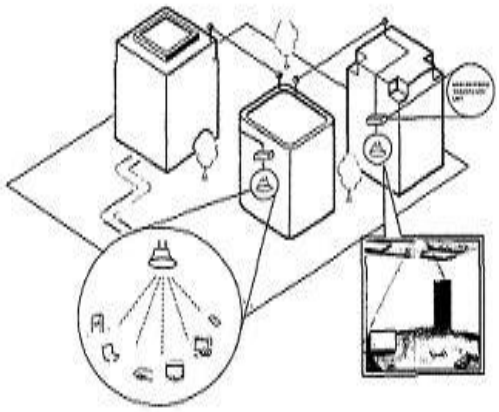

FIG 1

No. of Pages : 25 No. of Claims : 25

(12) PATENT APPLICATION PUBLICATION
(19) INDIA
(22) Date of filing of Application :21/01/2014

(21) Application No.211/MUM/2014 A
(43) Publication Date : 28/08/2015

(54) Title of the invention : SYSTEM FOR FORMING TEETH ON WORK-PIECES

(51) International classification	:B23C3/28, B23C5/10
(31) Priority Document No	:NA
(32) Priority Date	:NA
(33) Name of priority country	:NA
(86) International Application No	:NA
Filing Date	:NA
(87) International Publication No	: NA
(61) Patent of Addition to Application Number	:NA
Filing Date	:NA
(62) Divisional to Application Number	:NA
Filing Date	:NA

(71)**Name of Applicant :**
1)JK FILES (INDIA) LIMITED
Address of Applicant :P.O. JEKEGRAM, POKHRAN ROAD NO. 1, THANE (WEST) 400 606, MAHARASHTRA, INDIA. Maharashtra India
(72)**Name of Inventor :**
1)GUPTA, HARSHWARDHAN
2)BHANGE, HEMANT

(57) Abstract :
A cutting system for forming teeth on work-pieces is disclosed. The cutting system includes a base, an anvil securely holding work-pieces, a frame assembly mounted on the base, a sliding assembly supported by the frame assembly and supports a plurality of guide elements and a trolley, a ram assembly mounted on the trolley, a feed assembly, a first control system and the second control system. The ram assembly includes a ram that moves a chisel assembly towards and away from the work-piece to form teeth thereon and is moved by a cam and follower mechanism, a bellow cylinder and a spring. The feed assembly selectively facilitates travel of the trolley along the guide elements. The first control system controls pressure within the bellow cylinder. The second control system selectively actuates and de-actuates the feed assembly that in turn selectively actuates and de-actuates travel of the trolley along the guide elements.

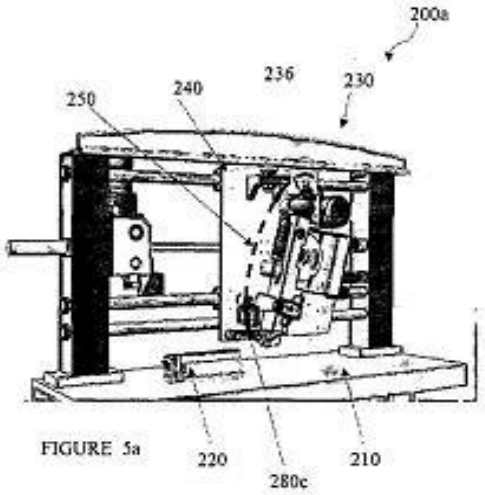

FIGURE 5a

No. of Pages : 46 No. of Claims : 13

(12) PATENT APPLICATION PUBLICATION
(21) Application No.138/MUM/2014 A
(19) INDIA
(22) Date of filing of Application :15/01/2014
(43) Publication Date : 28/08/2015

(54) Title of the invention : A COMPOSITE STRUCTURE OF ENCAPSUATED CORE-SHELL NANOPARTICLES AND GRAPHENE AND A METHOD FOR PRODUCTION THEREOF

(51) International classification	:C01B31/00, B82Y30/00, C01B31/04	(71)**Name of Applicant :** **1)INDIAN INSTITUTE OF TECHNOLOGY, BOMBAY** Address of Applicant :POWAI, MUMBAI 400076, MAHARASHTRA, INDIA Maharashtra India
(31) Priority Document No	:NA	
(32) Priority Date	:NA	(72)**Name of Inventor :**
(33) Name of priority country	:NA	**1)MISRA DEVI SHANKER**
(86) International Application No	:NA	**2)ROY SOUMYENDU**
Filing Date	:NA	**3)BAJPAI REETI**
(87) International Publication No	: NA	
(61) Patent of Addition to Application Number	:NA	
Filing Date	:NA	
(62) Divisional to Application Number	:NA	
Filing Date	:NA	

(57) Abstract :
The present invention relates to a composite structure comprising nanoparticles deposited on a graphene substrate. The nanoparticles (NPs) on the graphene substrate form a core-shell structure with the at least one graphitic sheet encapsulating the nanoparticles. The invention further relates to a process for producing the same.

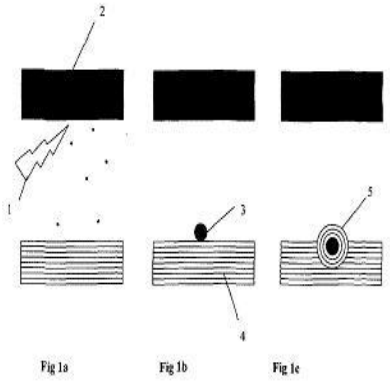

No. of Pages : 27 No. of Claims : 7

(12) PATENT APPLICATION PUBLICATION
(19) INDIA
(22) Date of filing of Application :16/01/2014
(21) Application No.157/MUM/2014 A
(43) Publication Date : 28/08/2015

(54) Title of the invention : RYU MOTOR GENERATOR.

(51) International classification :H02P6/12
(31) Priority Document No :NA
(32) Priority Date :NA
(33) Name of priority country :NA
(86) International Application No :NA
Filing Date :NA
(87) International Publication No : NA
(61) Patent of Addition to Application Number :NA
Filing Date :NA
(62) Divisional to Application Number :NA
Filing Date :NA

(71)**Name of Applicant :**
1)GANJI CHETAN LAXMANRAO
Address of Applicant :OMKAR CHS, E-8, ROOM NO.2, SECTOR-9, GHANSOLI, NAVI MUMBAI-400 701, MAHARASHTRA, INDIA Maharashtra India
(72)**Name of Inventor :**
1)GANJI CHETAN LAXMANRAO

(57) Abstract :
Ryu Motor Generator is a motor and a generator combined together as a single system. It is a motor that does the work of a motor as well as a generator or vice-versa. In a normal motor, input is electrical and output is mechanical. In RMG, input as well as output is electrical in nature i.e. motor is run using electricity and electricity is generated as the output of RMG. However, output can also be mechanical as well as (electrical + mechanical).

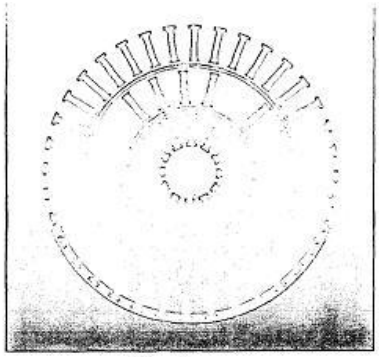

Fig.7

No. of Pages : 29 No. of Claims : 15

(12) PATENT APPLICATION PUBLICATION
(19) INDIA
(22) Date of filing of Application :17/01/2014

(21) Application No.166/MUM/2014 A
(43) Publication Date : 28/08/2015

(54) Title of the invention : PROPELLING DEVICE FOR BICYCLES

(51) International classification	:F04D25/10	(71)**Name of Applicant :**
(31) Priority Document No	:NA	**1)SANJEEV DATTATRAYA KULKARNI**
(32) Priority Date	:NA	Address of Applicant :C/O RAJEEV KULKARNI, B-402,
(33) Name of priority country	:NA	KANCHANVASTU APARTMENT, S NO. 173,LEFT BHUSARI,
(86) International Application No	:NA	PAUD ROAD, KOTHRUD, PUNE - 411 038. Maharashtra India
Filing Date	:NA	(72)**Name of Inventor :**
(87) International Publication No	: NA	**1)SANJEEV DATTATRAYA KULKARNI**
(61) Patent of Addition to Application Number	:NA	
Filing Date	:NA	
(62) Divisional to Application Number	:NA	
Filing Date	:NA	

(57) Abstract :
A propelling device for bicycles is disclosed that is integrable with a rear wheel of a bicycle. The propelling device includes a coil spring that is positioned on a rear wheel axle such that the spring is selectively wound while pedaling the bicycle in a reverse direction. The kinetic energy of reverse paddling is selectively stored in the spring. The energy stored in the coil spring is selectively released to propel the rear wheel of the bicycle. A clutch assembly facilitates storing the energy of reverse paddling in the coil spring during a charging cycle, A propelling assembly facilitates release of the potential energy stored in the coil spring during a propelling cycle to propel the bicycle. (FIG.1 for publication)

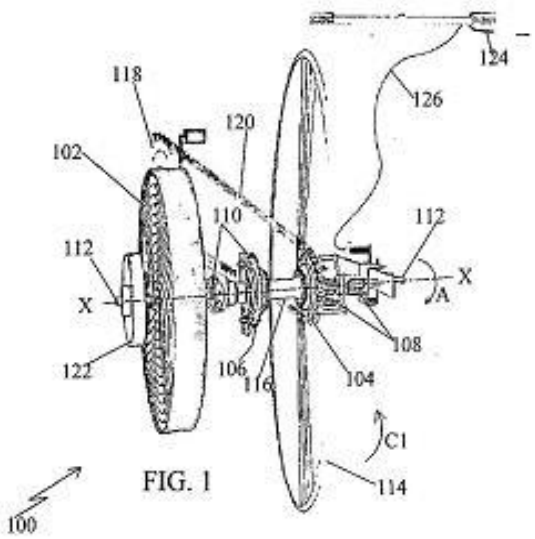

FIG. 1

No. of Pages : 30 No. of Claims : 28

(12) PATENT APPLICATION PUBLICATION
(21) Application No.186/MUM/2014 A
(19) INDIA
(22) Date of filing of Application :21/01/2014
(43) Publication Date : 28/08/2015

(54) Title of the invention : PROCESS OF PREPARING A PHARMACEUTICAL COMPOSITIONS COMPRISING FIXED DOSE COMBINATION OF METFORMIN AND LINAGLIPTIN OR SALTS THEREOF

(51) International classification	:A61K31/155, A61K9/20,
(31) Priority Document No	:NA
(32) Priority Date	:NA
(33) Name of priority country	:NA
(86) International Application No	:NA
Filing Date	:NA
(87) International Publication No	: NA
(61) Patent of Addition to Application Number	:NA
Filing Date	:NA
(62) Divisional to Application Number	:NA
Filing Date	:NA

(71)**Name of Applicant :**
1)WOCKHARDT LIMITED
Address of Applicant :D-4, MIDC Area, Chikalthana, Aurangabad Maharashtra India
(72)**Name of Inventor :**
1)Naidu, Venkataramana
2)Wagh, Balasaheb Parshuram
3)Krishna Mohan L.
4)Jain, Girish Kumar

(57) Abstract :
The present invention relates to a process of preparing a pharmaceutical composition of metformin and linagliptin or salt thereof. In particular, the present invention relates to a process of preparing stable oral pharmaceutical composition comprising fixed dose combination of metformin and linagliptin or salt thereof. By using an amino sugar, it is possible to achieve the stable pharmaceutical composition of metformin and linagliptin. The invention further relates to use of such composition in the treatment of diabetes mellitus.

No. of Pages : 21 No. of Claims : 8

(12) PATENT APPLICATION PUBLICATION
(21) Application No.2154/MUMNP/2014 A
(19) INDIA
(22) Date of filing of Application :28/10/2014
(43) Publication Date : 28/08/2015

(54) Title of the invention : SEALING MECHANISM FOR PACKAGING CONTAINERS

(51) International classification :B65D55/02
(31) Priority Document No :MN2012A000006
(32) Priority Date :28/03/2012
(33) Name of priority country :Italy
(86) International Application No :PCT/IT2013/000090
Filing Date :27/03/2013
(87) International Publication No :WO 2013/144988
(61) Patent of Addition to Application Number :NA
Filing Date :NA
(62) Divisional to Application Number :NA
Filing Date :NA

(71)**Name of Applicant :**
1)ZACCHI Luca
Address of Applicant :Frazione Gravona 4 28039 Varzo (Verbania) Italy
(72)**Name of Inventor :**
1)ZACCHI Luca

(57) Abstract :
The present invention relates to a sealing mechanism for packaging containers particularly suitable to offer the end recipient a means of testing and guaranteeing that the container has not been tampered with or opened during transport operations which could result in the risk of deterioration of the products contained therein or the theft thereof and that it has reached its destination in the same condition as when it left. The sealing mechanism for packaging containers of the low coefficient type essentially comprises a first pin (2) and a second pin (3) envisaged to engage with a relative seat present on the edge of a container of the low coefficient type and a tab (4) designed to fit into the space between the pins (2 and 3). The mechanism for packaging containers of the high coefficient type features essentially a first component (5) consisting of a plate (50) envisaged to fit into a relative seat present in the container a second component (6) consisting of an opening block (60) and a fitting (65) designed to engage with the lid of the container and a third component (7) consisting of a pin envisaged to engage with the first component and the second component securing the entire mechanism. The mechanism is made of crystal polystyrene is of the disposal type and is completely recyclable.

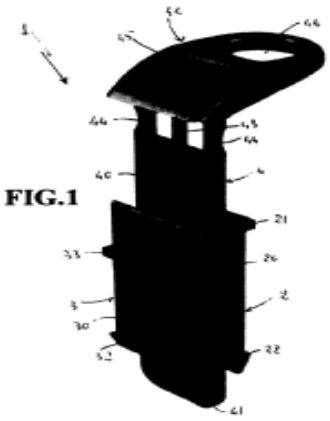

FIG.1

No. of Pages : 26 No. of Claims : 10

(12) PATENT APPLICATION PUBLICATION
(21) Application No.206/MUM/2014 A
(19) INDIA
(22) Date of filing of Application :21/01/2014
(43) Publication Date : 28/08/2015

(54) Title of the invention : MODULAR CLASSROOM SEATING ARRANGEMENT

(51) International classification :A47C15/00
(31) Priority Document No :NA
(32) Priority Date :NA
(33) Name of priority country :NA
(86) International Application No :NA
Filing Date :NA
(87) International Publication No : NA
(61) Patent of Addition to Application Number :NA
Filing Date :NA
(62) Divisional to Application Number :NA
Filing Date :NA

(71)**Name of Applicant :**
1)GODREJ & BOYCE MFG CO LIMITED
Address of Applicant :PIROJSHANAGAR, VIKHROLI (WEST), MUMBAI 400 079, MAHARASHTRA, INDIA. Maharashtra India
(72)**Name of Inventor :**
1)MANDREKAR LALITESH SHARAD
2)DARAPANENI HARIBABU

(57) Abstract :
The classroom seating arrangement (1) comprises one or more rows of a plurality of pairs of integrated bench and desk combinations (2) detachably connected to one another. Each row further comprises a complementary modular desk (5) disposed in front of the modular bench of the integrated bench and desk combination at the front end of the row and detachably connected to the integrated bench and desk combination at the front end of the row. A complementary modular bench (6) is disposed behind the integrated bench and desk combination at the back end of the row and is detachably connected to the integrated bench and desk combination at the back end of the row (Fig 1).

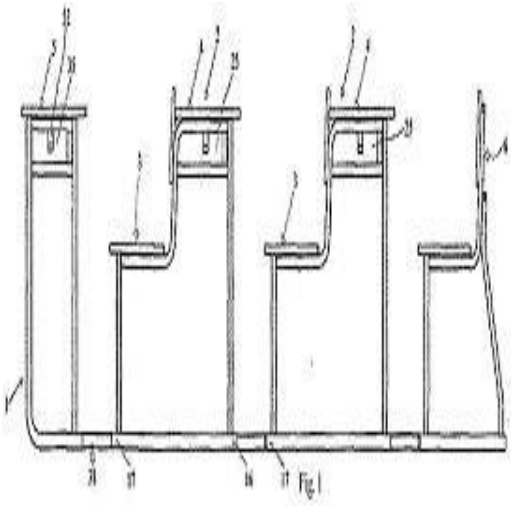

No. of Pages : 24 No. of Claims : 11

(12) PATENT APPLICATION PUBLICATION
(19) INDIA
(22) Date of filing of Application :28/10/2014

(21) Application No.2160/MUMNP/2014 A
(43) Publication Date : 28/08/2015

(54) Title of the invention : MULTI STAGE HYDRAULIC MECHANICAL GARBAGE INCINERATOR

(51) International classification :F23G5/44,F23G5/04
(31) Priority Document No :201210096484.5
(32) Priority Date :01/04/2012
(33) Name of priority country :China
(86) International Application No :PCT/CN2012/086308
Filing Date :10/12/2012
(87) International Publication No :WO 2013/149478
(61) Patent of Addition to Application Number :NA
Filing Date :NA
(62) Divisional to Application Number :NA
Filing Date :NA

(71)**Name of Applicant :**
1)EVERBRIGHT ENVIRONMENTAL PROTECTION TECHNOLOGICAL DEVELOPMENT (BEIJING) LIMITED
Address of Applicant :Building 3 Zhongguancun Environmental Protection Park No.5 Dijin Rd Haidian District Beijing 100095 China
2)EVERBRIGHT ENVIRONMENTAL PROTECTION EQUIPMENT MANUFACTURING (CHANGZHOU) LIMITED
3)EVERBRIGHT ENVIRONMENTAL PROTECTION (CHINA) LIMITED
(72)**Name of Inventor :**
1)CHEN Tao
2)HAN Naiqing
3)ZHU Fugang
4)ZHANG Hongbo
5)WEN Junming
6)ZHANG Bin
7)SHAO Zheru

(57) Abstract :
A multi stage hydraulic mechanical garbage incinerator comprising a material inlet a material feeding grate (4) an incineration grate a primary air supply system and a secondary air supply system. The incineration grate is divided along the longitudinal direction into five units where the first to the fourth of the units are standard units and where the fifth unit is an end extension unit while each unit consists of several sliding grate plates flipping grate plates and fixed grate plates. The five units divide the entire incineration grate along a direction of garbage movement into a drying section a combustion section and a burnout section. A limiting support apparatus (2) for use in limiting upward movement of a material feeding trolley (3) of the material feeding grate (4) is provided on the upper surface at the tail part of the material feeding trolley (3).

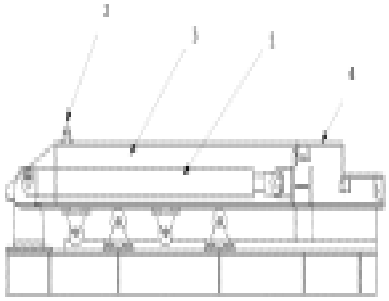

Fig. 6

No. of Pages : 30 No. of Claims : 34

(12) PATENT APPLICATION PUBLICATION
(19) INDIA
(22) Date of filing of Application :28/10/2014

(21) Application No.2161/MUMNP/2014 A
(43) Publication Date : 28/08/2015

(54) Title of the invention : MULTI STAGE HYDRAULIC MECHANICAL GARBAGE INCINERATOR AND CONTROL METHOD THEREFOR

(51) International classification :F23G5/44,F23G5/04,F23G5/50
(31) Priority Document No :201210096588.6
(32) Priority Date :01/04/2012
(33) Name of priority country :China
(86) International Application No :PCT/CN2012/086311
Filing Date :10/12/2012
(87) International Publication No :WO 2013/149479
(61) Patent of Addition to Application Number :NA
Filing Date :NA
(62) Divisional to Application Number :NA
Filing Date :NA

(71)**Name of Applicant :**
1)EVERBRIGHT ENVIRONMENTAL PROTECTION TECHNOLOGICAL DEVELOPMENT (BEIJING) LIMITED
Address of Applicant :Building 3 Zhongguancun Environmental Protection Park No.5 Dijin Rd Haidian District Beijing 100095 China
2)EVERBRIGHT ENVIRONMENTAL PROTECTION EQUIPMENT MANUFACTURING (CHANGZHOU) LIMITED
(72)**Name of Inventor :**
1)CHEN Tao
2)ZHANG Bin
3)WEN Junming
4)HAN Naiqing
5)ZHU Fugang
6)WANG Jiansheng
7)ZHU Liang
8)LIU Yukun
9)SHAO Zheru

(57) Abstract :
A multi stage hydraulic mechanical garbage incinerator and a control method therefor. The garbage incinerator comprises a material feeding inlet a material feeding grate an incineration grate a primary air supply system and a secondary air supply system. The incineration grate is divided along the longitudinal direction into five units where the units from the first unit (2) to the fourth unit (5) are standard units and where the fifth unit (6) is an end extension unit while each of the units (2 3 4 5 and 6) consists of several sliding grate plates flipping grate plates and fixed grate plates. The five units divide the entire incineration grate along the longitudinal direction into a drying section a combustion section and a burnout section. Each grate plate of the incineration grate is driven along the horizontal direction by a shaft and is supported in the horizontal direction on at least three positions by steel frames. The control method for the garbage incinerator comprises control methods for the air supply systems and for the incinerator grate plates. This is to improve the insufficiency in existing garbage incinerators and to increase the burnout rate of garbage incineration.

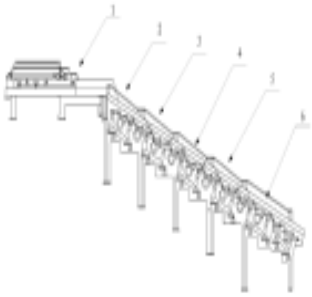

FIG. 2

No. of Pages : 42 No. of Claims : 55

(12) PATENT APPLICATION PUBLICATION
(21) Application No.1308/MUM/2014 A
(19) INDIA
(22) Date of filing of Application :09/04/2014
(43) Publication Date : 28/08/2015

(54) Title of the invention : DATA REFLECTING METHOD AND SYSTEM

(51) International classification	:G06F11/20	(71)**Name of Applicant :**
(31) Priority Document No	:2013-082598	**1)HITACHI, LTD.**
(32) Priority Date	:11/04/2013	Address of Applicant :6-6, Marunouchi 1-Chome, Chiyoda-ku, Tokyo 100-8280, Japan Japan
(33) Name of priority country	:Japan	(72)**Name of Inventor :**
(86) International Application No	:PCT//	**1)Yusuke FUKAGAWA**
Filing Date	:01/01/1900	
(87) International Publication No	: NA	
(61) Patent of Addition to Application Number	:NA	
Filing Date	:NA	
(62) Divisional to Application Number	:NA	
Filing Date	:NA	

(57) Abstract :
The present invention provides a data reflecting method for reflecting data of a transfer source system to a transfer destination system, which includes applying a parallel key indicative of the ordering of respective elements constituting the data targeted for reflection to the elements in the transfer source system, transferring the data from the transfer source system to the transfer destination system, and parallelizing the elements in accordance with the parallel key in the transfer destination system and reflecting the same to a database in the transfer destination system. More specifically, the present invention assures ordering of elements constituting unit data like one transaction using a parallel key indicative of their ordering and executes parallelized reflection processing. This parallel key means that a column name that satisfies predetermined conditions is given the same parallel key, in accordance with which its control is performed. As the predetermined conditions, the determination on whether the column names or the like are the same controls the reflection processing

No. of Pages : 29 No. of Claims : 11

(12) PATENT APPLICATION PUBLICATION
(21) Application No.197/MUM/2014 A
(19) INDIA
(22) Date of filing of Application :21/01/2014
(43) Publication Date : 28/08/2015

(54) Title of the invention : A PROCESS FOR THE PREPARATION OF APIXABAN AND ITS INTERMEDIATES

(51) International classification :C07D471/04
(31) Priority Document No :NA
(32) Priority Date :NA
(33) Name of priority country :NA
(86) International Application No :NA
Filing Date :NA
(87) International Publication No : NA
(61) Patent of Addition to Application Number :NA
Filing Date :NA
(62) Divisional to Application Number :NA
Filing Date :NA

(71)**Name of Applicant :**
1)WANBURY LTD
Address of Applicant :WANBURY LTD., BSEL TECH PARK, B-WING 10TH FLOOR, SECTOR-30A OPP. VASHI RAILWAY STATION, VASHI, NAVI MUMBAI-400 703 Maharashtra India
(72)**Name of Inventor :**
1)NITIN SHARADCHANDRA PRADHAN ,
2)SACHIN ULHAS SONAVANE
3)DAYAGHAN GHANGADHAR PATIL
4)UTTAM SAKHARAM PUJARI
5)RAVINDRA BHAUSAHEB PAGIRE

(57) Abstract :
The present invention discloses the novel process for preparation of Apixaban intermediate formula (D), Intermediate formula (E) and preparation of Apixaban from theses intermediates.

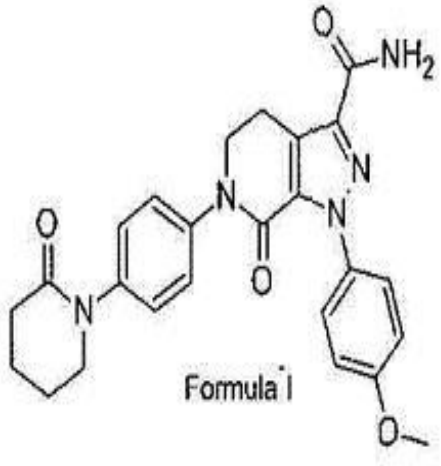

Formula I

No. of Pages : 21 No. of Claims : 12

(12) PATENT APPLICATION PUBLICATION
(19) INDIA
(22) Date of filing of Application :28/10/2014
(21) Application No.2166/MUMNP/2014 A
(43) Publication Date : 28/08/2015

(54) Title of the invention : LIGHTING DEVICE FOR GENERATING A SEGMENTED LIGHT DISTRIBUTION

(51) International classification :F21S8/10,F21Y101/02
(31) Priority Document No :A 50166/2012
(32) Priority Date :09/05/2012
(33) Name of priority country :Austria
(86) International Application No :PCT/AT2013/050102
Filing Date :07/05/2013
(87) International Publication No :WO 2013/166537
(61) Patent of Addition to Application Number :NA
Filing Date :NA
(62) Divisional to Application Number :NA
Filing Date :NA

(71)**Name of Applicant :**
1)ZIZALA LICHTSYSTEME GMBH
Address of Applicant :Scheibbser Strae 17 A 3250 Wieselburg Austria
(72)**Name of Inventor :**
1)MOSER Andreas
2)EICHINGER Bernd
3)FRANK Heimo

(57) Abstract :
The invention relates to a lighting device (1) for a motor vehicle comprising two or more lighting units (2). Each lighting unit (2) comprises: at least one reflector (3) and at least one light source (4) paired with the at least one reflector (3). Light from the at least one light source (4) is emitted into a region in front of the vehicle via the corresponding at least one reflector (3) in the installed state of the lighting device (1) and the sub light distributions of the two or more lighting units (2) form a light distribution of the lighting device (1). The sub light distributions of the individual lighting units (2) are arranged adjacently to one another in the horizontal direction and the reflectors (3) of the lighting units (2) are designed such that the sub light distribution of each lighting unit (2) has at least one sharp vertical light dark boundary.

No. of Pages : 37 No. of Claims : 20

(12) PATENT APPLICATION PUBLICATION
(21) Application No.2167/MUMNP/2014 A
(19) INDIA
(22) Date of filing of Application :28/10/2014
(43) Publication Date : 28/08/2015

(54) Title of the invention : GEAR PUMP WITH ASYMMETRICAL DUAL BEARING

(51) International classification :F16C33/10
(31) Priority Document No :61/618,218
(32) Priority Date :30/03/2012
(33) Name of priority country :U.S.A.
(86) International Application No :PCT/US2013/034034
Filing Date :27/03/2013
(87) International Publication No :WO 2013/148792
(61) Patent of Addition to Application Number :NA
Filing Date :NA
(62) Divisional to Application Number :NA
Filing Date :NA

(71)**Name of Applicant :**
1)IMO INDUSTRIES INC.
Address of Applicant :3525 Quakerbridge Road Suite 912 Hamilton NJ 08619 U.S.A.
(72)**Name of Inventor :**
1)ALEXANDER Philip T.
2)NORTON Neil V.
3)OEHMAN Robert E. Jr.
4)ROLLINS Mary B.
5)CATE Joel E.

(57) Abstract :
An asymmetrical bearing is disclosed for use in a gear pump. The bearing may have first and second opposing faces and first and second bores in communication with the first and second opposing faces. The first and second bores may be configured to receive first and second shafts of a gear pump. The bearing may have a first flat side surface and a second curved side surface where the second curved side surface includes first and second curved portions associated with the first and second bores respectively. The first and second faces and the first flat side surface may also include a plurality of grooves configured to direct a flow of process fluid over the bearing during operation of the pump. Self aligning features can be provided on one or more sealing elements to ensure desired alignment of the sealing components during assembly. Other embodiments are described and claimed.

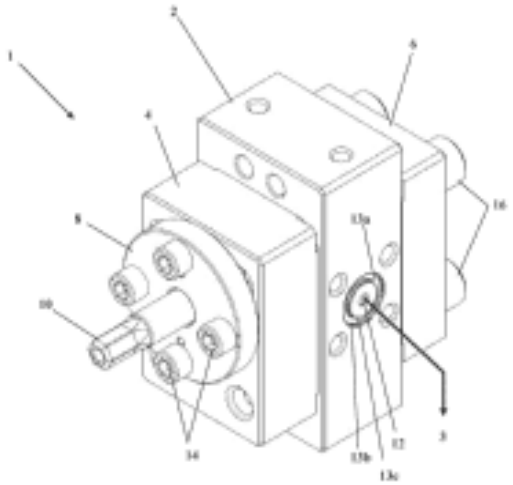

FIG. 1

No. of Pages : 48 No. of Claims : 21

(12) PATENT APPLICATION PUBLICATION
(21) Application No.158/MUM/2014 A
(19) INDIA
(22) Date of filing of Application :16/01/2014
(43) Publication Date : 28/08/2015

(54) Title of the invention : CORRELATION ANALYSIS OF PERFORMANCE METRICES

(51) International classification	:G06F 11/00, H04L12/24, G06F15/173	(71)**Name of Applicant :** **1)TATA CONSULTANCY SERVICES LIMITED** Address of Applicant :Nirmal Building, 9th Floor, Nariman Point, Mumbai, Maharashtra 400021 Maharashtra India
(31) Priority Document No	:NA	(72)**Name of Inventor :**
(32) Priority Date	:NA	**1)ILANGOVAN, Ramkumar**
(33) Name of priority country	:NA	**2)CHATTERJEE, Swarup**
(86) International Application No	:NA	
Filing Date	:NA	
(87) International Publication No	: NA	
(61) Patent of Addition to Application Number	:NA	
Filing Date	:NA	
(62) Divisional to Application Number	:NA	
Filing Date	:NA	

(57) Abstract :
The present subject matter relates to a method and system for correlation analysis of performance metrics. In one embodiment, a computing system (100) for correlation analysis of performance metrics is described. The computing system (100) includes a processor (104), and a memory (106) which is coupled to the processor (104). Further, the memory (106) comprises a profiler agent (210), a correlation engine (220), and a graphics controller (218). The profiler agent (210) collects the performance metrics based on execution of a target application (208). The correlation engine (220) establishes correlation between the performance metrics based on a predefined parameter. The graphics controller (218) generates a consolidated interface (300) of the performance metrics depicting the established correlation between the performance metrics.

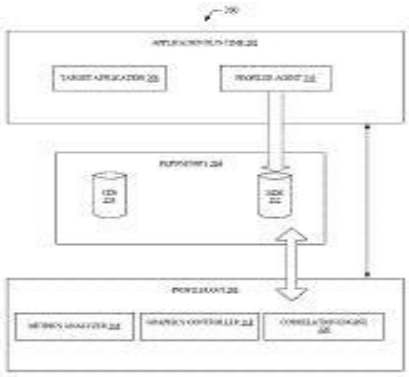

Figure 2

No. of Pages : 26 No. of Claims : 17

(12) PATENT APPLICATION PUBLICATION
(19) INDIA
(22) Date of filing of Application :28/10/2014
(21) Application No.2163/MUMNP/2014 A
(43) Publication Date : 28/08/2015

(54) Title of the invention : SLURRY COATING DEVICE AND SLURRY COATING METHOD

(51) International classification :B05C11/02,B05C1/08,B05D1/28
(31) Priority Document No :2012-107886
(32) Priority Date :09/05/2012
(33) Name of priority country :Japan
(86) International Application No :PCT/JP2013/063077
Filing Date :09/05/2013
(87) International Publication No :WO 2013/168777
(61) Patent of Addition to Application Number :NA
Filing Date :NA
(62) Divisional to Application Number :NA
Filing Date :NA

(71)**Name of Applicant :**
1)JFE STEEL CORPORATION
Address of Applicant :2 3 Uchisaiwai cho 2 chome Chiyoda ku Tokyo 1000011 Japan
(72)**Name of Inventor :**
1)KIJIMA Hideo
2)HARADA Yushi
3)YAMAGUCHI Makoto
4)TORIU Junichi

(57) Abstract :
A slurry coating device which is one embodiment of the present invention is for coating a slurry (4) onto a band shaped body (1) that travels and is provided with a slurry discharge means (3) configured so as to be able to provide the slurry (4) to the band shaped body (1). This slurry coating device is roughly parallel to the surface of the band shaped body and in a direction roughly perpendicular to the travel direction of the band shaped body (1) the slurry coating device causes the relative positional relationship between the slurry discharge means (3) and the band shaped body (1) to change and provides the slurry (4) to the band shaped body (1) using the slurry discharge means (3).

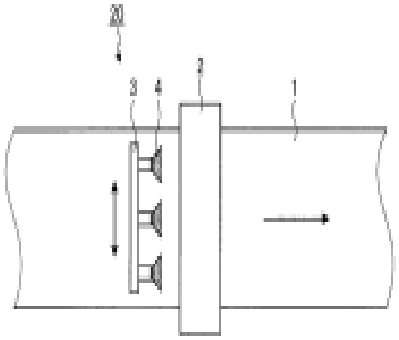

No. of Pages : 72 No. of Claims : 29

(12) PATENT APPLICATION PUBLICATION
(19) INDIA
(22) Date of filing of Application :28/10/2014

(21) Application No.2164/MUMNP/2014 A
(43) Publication Date : 28/08/2015

(54) Title of the invention : ACTIVATABLE ANTIBODIES THAT BIND EPIDERMAL GROWTH FACTOR RECEPTOR AND METHODS OF USE THEREOF

(51) International classification :A61K39/00,C07K16/28,C12P21/08
(31) Priority Document No :61/639,796
(32) Priority Date :27/04/2012
(33) Name of priority country :U.S.A.
(86) International Application No :PCT/US2013/038540
Filing Date :26/04/2013
(87) International Publication No :WO 2013/163631
(61) Patent of Addition to Application Number :NA
Filing Date :NA
(62) Divisional to Application Number :NA
Filing Date :NA

(71)**Name of Applicant :**
1)CYTOMX THERAPEUTICS INC.
Address of Applicant :650 Gateway Boulevard #125 South San Francisco CA 94080 7014 U.S.A.
(72)**Name of Inventor :**
1)LOWMAN Henry Bernard
2)DESNOYERS Luc Roland
3)LIU Shouchun
4)WEST James William
5)SAGERT Jason Gary
6)VASILJEVA Olga
7)MENENDEZ Elizabeth Edna Mary

(57) Abstract :
The invention relates generally to activatable antibodies that include a masking moiety (MM) a cleavable moiety (CM) and an antibody (AB) that specifically binds to epidermal growth factor receptor (EGFR) and to methods of making and using these anti EGFR activatable antibodies in a variety of therapeutic diagnostic and prophylactic indications.

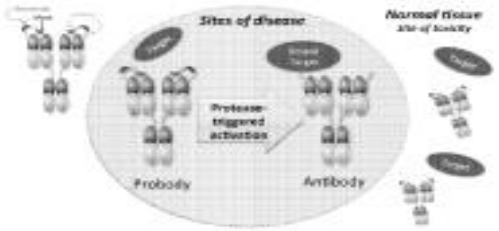

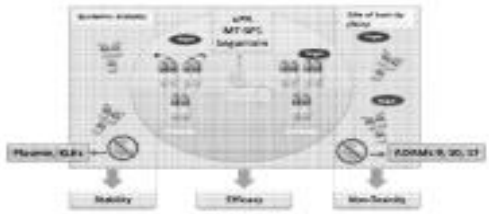

No. of Pages : 240 No. of Claims : 68

(12) PATENT APPLICATION PUBLICATION
(19) INDIA
(22) Date of filing of Application :28/10/2014
(21) Application No.2165/MUMNP/2014 A
(43) Publication Date : 28/08/2015

(54) Title of the invention : PROCESS FOR PREPARING ACTIVATED PLANT COMPLEXES AND PLANT/ORGANIC MATTER COMPLEXES THAT ARE DOPED OR OVERDOPED AND CARBONATED AND THE APPLICATIONS THEREOF IN PARTICULAR IN METHANIZATION OR MANUFACTURE OF BIOGAS

(51) International classification :C05F9/04,C05F17/00
(31) Priority Document No :12 002 508.5
(32) Priority Date :05/04/2012
(33) Name of priority country :EPO
(86) International Application No :PCT/IB2013/000550
Filing Date :28/03/2013
(87) International Publication No :WO 2013/150355
(61) Patent of Addition to Application Number :NA
Filing Date :NA
(62) Divisional to Application Number :NA
Filing Date :NA

(71)**Name of Applicant :**
1)MEZY Marcel Lon
Address of Applicant :17 Route du Maquis Jean Pierre F 12340 Bozouls France
(72)**Name of Inventor :**
1)MEZY Marcel Lon

(57) Abstract :
The invention relates to the preparation of doped plant complexes by a process of fermenting a compost CP in particular of straw and of horse manure fermented for 3 6 days with coverage by a special carbonated plant complex CVC. A doped or overdoped plant complex is obtained that has a very high concentration in particular of humic acid nuclei mycorrhizae and fixed gases (nitrogen carbon) having an extremely improved biological activity with an application in the improvement of methanization up to 200 350%.

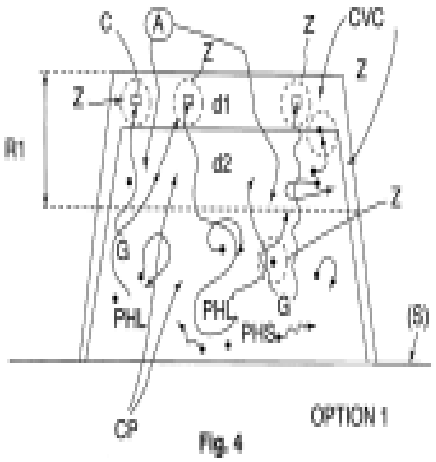

Fig. 4

No. of Pages : 49 No. of Claims : 12

(12) PATENT APPLICATION PUBLICATION
(19) INDIA
(22) Date of filing of Application :29/10/2014

(21) Application No.2172/MUMNP/2014 A
(43) Publication Date : 28/08/2015

(54) Title of the invention : SYSTEM APPARATUS AND METHOD FOR ADAPTIVE OBSERVATION OF MOBILE DEVICE BEHAVIOR

(51) International classification :H04W24/00
(31) Priority Document No :61/646,590
(32) Priority Date :14/05/2012
(33) Name of priority country :U.S.A.
(86) International Application No :PCT/US2012/067726
Filing Date :04/12/2012
(87) International Publication No :WO 2013/172865
(61) Patent of Addition to Application Number :NA
Filing Date :NA
(62) Divisional to Application Number :NA
Filing Date :NA

(71)**Name of Applicant :**
1)QUALCOMM INCORPORATED
Address of Applicant :Attn: International Ip Administration 5775 Morehouse Drive San Diego California 92121 U.S.A.
(72)**Name of Inventor :**
1)GUPTA Rajarshi
2)GATHALA Sudha Anil
3)HALAMBI Soorgoli Ashok

(57) Abstract :
Methods devices and systems for detecting suspicious or performance degrading mobile device behaviors intelligently dynamically and/or adaptively determine computing device behaviors that are to be observed the number of behaviors that are to be observed and the level of detail or granularity at which the mobile device behaviors are to be observed. The various aspects efficiently identify suspicious or performance degrading mobile device behaviors without requiring an excessive amount of processing memory or energy resources. Various aspects may correct suspicious or performance degrading mobile device behaviors. Various aspects may prevent identified suspicious or performance degrading mobile device behaviors from degrading the performance and power utilization levels of a mobile device over time. Various aspects may restore an aging mobile device to its original performance and power utilization levels.

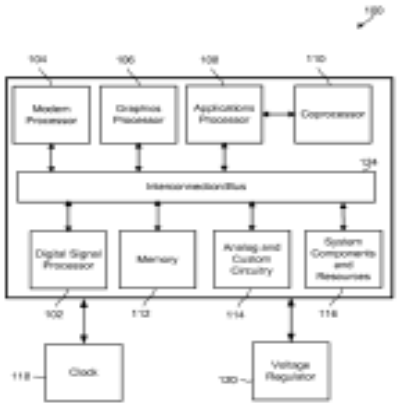

FIG. 1

No. of Pages : 63 No. of Claims : 40

(12) PATENT APPLICATION PUBLICATION
(19) INDIA
(22) Date of filing of Application :29/10/2014

(21) Application No.2173/MUMNP/2014 A
(43) Publication Date : 28/08/2015

(54) Title of the invention : ARCHITECTURE FOR CLIENT CLOUD BEHAVIOR ANALYZER

(51) International classification	:G06F9/54, G06N5/04,G06N99/00
(31) Priority Document No	:61/646,590
(32) Priority Date	:14/05/2012
(33) Name of priority country	:U.S.A.
(86) International Application No	:PCT/US2013/035963
Filing Date	:10/04/2013
(87) International Publication No	:WO 2013/173003
(61) Patent of Addition to Application Number	:NA
Filing Date	:NA
(62) Divisional to Application Number	:NA
Filing Date	:NA

(71)**Name of Applicant :**
1)QUALCOMM INCORPORATED
Address of Applicant :Attn: International Ip Administration 5775 Morehouse Drive San Diego California 92121 U.S.A.
(72)**Name of Inventor :**
1)GUPTA Rajarshi
2)WEI Xuetao
3)GATHALA Anil
4)SRIDHARA Vinay

(57) Abstract :
Methods systems and devices for generating data models in a client cloud communication system may include applying machine learning techniques to generate a first family of classifier models that describe a cloud corpus of behavior vectors. Such vectors may be analyzed to identify factors in the first family of classifier models that have the highest probably of enabling a mobile device to conclusively determine whether a mobile device behavior is malicious or benign. Based on this analysis a a second family of classifier models may be generated that identify significantly fewer factors and data points as being relevant for enabling the mobile device to conclusively determine whether the mobile device behavior is malicious or benign based on the determined factors. A mobile device classifier module based on the second family of classifier models may be generated and made available for download by mobile devices including devices contributing behavior vectors.

FIG. 7

No. of Pages : 73 No. of Claims : 16

(12) PATENT APPLICATION PUBLICATION
(19) INDIA
(22) Date of filing of Application :29/10/2014
(21) Application No.2174/MUMNP/2014 A
(43) Publication Date : 28/08/2015

(54) Title of the invention : METHOD AND APPARATUS FOR REDUCTION OF TAR IN GASIFICATION OF CARBONACEOUS MATERIALS

(51) International classification :C10J3/84
(31) Priority Document No :NA
(32) Priority Date :NA
(33) Name of priority country :NA
(86) International Application No :PCT/US2012/000184
Filing Date :03/04/2012
(87) International Publication No :WO 2013/151522
(61) Patent of Addition to Application Number :NA
Filing Date :NA
(62) Divisional to Application Number :NA
Filing Date :NA

(71)**Name of Applicant :**
1)FRONTLINE BIOENERGY LLC
Address of Applicant :1421 South Bell Avenue Ames IA 50010 U.S.A.
(72)**Name of Inventor :**
1)PASKACH Thomas J.
2)SMEENK Jerod

(57) Abstract :
A method and assembly for producing substantially tar free product gas from gasification of carbonaceous material. The assembly preferably includes a first stage gasifier to produce char ash and tar laden product gas and a second stage gasifier which has a char ash heating zone at least one cyclone and at least one standpipe for the purpose of allowing selective delivery of char ash to the char ash heating zone. A char ash heating zone that utilizes oxidation of char ash is preferred and this results in the heat required to convert tar additional yield of product gas and an oxidized activated carbon surface to facilitate tar conversion in the riser thereby reducing the temperature required to achieve the desired tar conversion. Alternatively external heat is supplied to the heating zone.

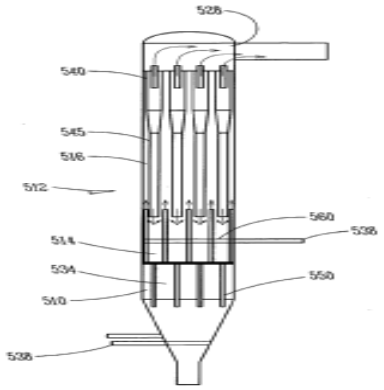

FIG. 5

No. of Pages : 30 No. of Claims : 31

(12) PATENT APPLICATION PUBLICATION
(19) INDIA
(22) Date of filing of Application :29/10/2014
(21) Application No.2175/MUMNP/2014 A
(43) Publication Date : 28/08/2015

(54) Title of the invention : PYRROLOBENZODIAZEPINES

(51) International classification :C07D487/04,A61K31/5517,A61P31/04
(31) Priority Document No :61/640,316
(32) Priority Date :30/04/2012
(33) Name of priority country :U.S.A.
(86) International Application No:PCT/GB2013/051097
Filing Date :30/04/2013
(87) International Publication No :WO 2013/164592
(61) Patent of Addition to Application Number :NA
Filing Date :NA
(62) Divisional to Application Number :NA
Filing Date :NA

(71)**Name of Applicant :**
1)UCL BUSINESS PLC
Address of Applicant :The Network Building 2nd Floor 97 Tottenham Court Road London Greater London W1T 4TP U.K.
2)SPIROGEN SRL
(72)**Name of Inventor :**
1)HOWARD Philip Wilson
2)THURSTON David Edwin
3)RAHMAN Khondaker Mirazur
4)TAYLOR Peter William

(57) Abstract :
2 2227231 73 20 5 201011Q Q1 7x11 2 2121m13 20 41 42n3 202n3 20112211 4 A compound of formula (I) or a salt or solvate thereof wherein the dotted double bond indicates the presence of a single or double bond between C2 and C3; Ris selected from H OH =O =CH CN
R OR halo dihalo =CHR =CHRR O SO R COR and COR; R is selected from H R OH OR SH SR NH NHR NRR nitro MeSn and halo; where R and R are independently selected from optionally substituted C alkyl Cheterocyclyl and C aryl groups; R and R either together form a double bond or are selected from H and QRrespectively where Q is selected from O S and NH and R is H or C alkyl or H and SOM where x is 2 or 3 and M is a monovalent pharmaceutically acceptable cation; A is selected from (A1) (A2) (A3) (A4) or (A5) where X and Yare selected from: CH and NH; CH and NMe; N and NMe; CH and S; N and S; N and O; and CH and O respectively; Xand Y are selected from: CH and NH; CH and NMe; N and NMe; CH and S; N and S; N and O; and CH and O respectively; Z is selected from O and S; Z is selected from CH and N; F is selected from a single bond and (E F) ; each E is independently selected from a single bond and C(=O) NH ; each F is independently a C heteroarylene group; m is 1 2 or 3; G is selected from hydrogen C1alkyl C(=O) O Calkyl (CH) C heterocycloalkyl and O (CH) C heterocycloalkyl group; each n is 0 4; provided that A2 is not A2 where X and Y of A2 are selected from: CH and NMe; COH and NMe; CH and S; N and NMe; N and S respectively; and provided that A3 is not A3 where X and Y of A3 are selected from: CH and NMe; COH and NMe; CH and S; N and NMe; N and S respectively; B is either a single bond or (B1) where X and Y of B1 are selected from: CH and NMe; COH and NMe; CH and S; N and NMe; N and S respectively; and R is Calkyl.

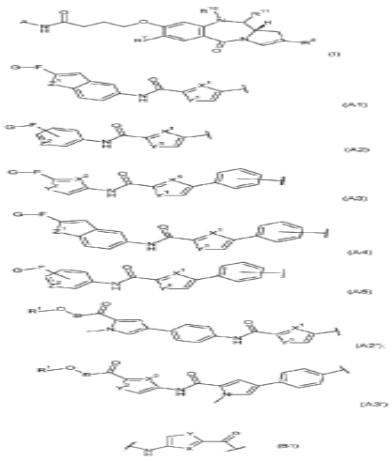

No. of Pages : 80 No. of Claims : 47

(12) PATENT APPLICATION PUBLICATION
(19) INDIA
(22) Date of filing of Application :29/10/2014

(21) Application No.2176/MUMNP/2014 A
(43) Publication Date : 28/08/2015

(54) Title of the invention : COMMUNICATING BEHAVIOR INFORMATION IN A MOBILE COMPUTING DEVICE

(51) International classification :H04W24/00
(31) Priority Document No :61/646,590
(32) Priority Date :14/05/2012
(33) Name of priority country :U.S.A.
(86) International Application No :PCT/US2013/038399
Filing Date :26/04/2013
(87) International Publication No :WO 2013/173043
(61) Patent of Addition to Application Number :NA
Filing Date :NA
(62) Divisional to Application Number :NA
Filing Date :NA

(71)**Name of Applicant :**
1)QUALCOMM INCORPORATED
Address of Applicant :Attn: International IP Administration 5775 Morehouse Drive San Diego California 92121 U.S.A.
(72)**Name of Inventor :**
1)GUPTA Rajarshi
2)HALAMBI Soorgoli Ashok
3)GATHALA Sudha A.
4)SRIDHARA Vinay

(57) Abstract :
Methods systems and devices for communicating behavior analysis information using an application programming interface (API) may include receiving data/behavior models from one or more third party network servers in a client module of a mobile device and communicating the information to a behavior observation and analysis system via a behavior API. The third party servers may be maintained by one or more partner companies that have domain expertise in a particular area or technology that is relevant for identifying analyzing classifying and/or reacting to mobile device behaviors but that do not have access to (or knowledge of) the various mobile device sub
systems interfaces configurations modules processes drivers and/or hardware systems required to generate effective data/behavior models suitable for use by the mobile device. The behavior API and/or client modules allow the third party server to quickly and efficiently access the most relevant and important information on the mobile device.

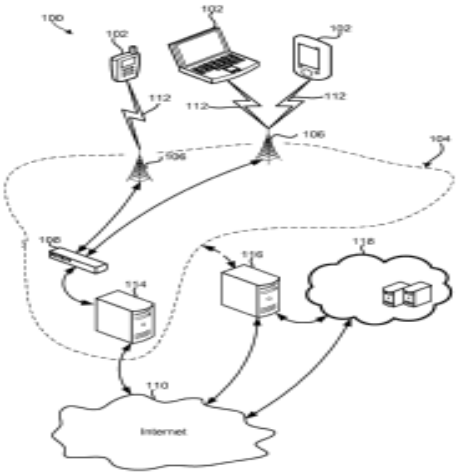

FIG. 1

No. of Pages : 91 No. of Claims : 84

(12) PATENT APPLICATION PUBLICATION
(19) INDIA
(22) Date of filing of Application :29/10/2014
(21) Application No.2177/MUMNP/2014 A
(43) Publication Date : 28/08/2015

(54) Title of the invention : FEEDBACK TO ENHANCE RATE PREDICTION WITH BURSTY INTERFERENCE

(51) International classification :H04L1/00,H04L1/16,H04L1/18
(31) Priority Document No :61/651,879
(32) Priority Date :25/05/2012
(33) Name of priority country :U.S.A.
(86) International Application No :PCT/US2013/042054
Filing Date :21/05/2013
(87) International Publication No :WO 2013/177184
(61) Patent of Addition to Application Number :NA
Filing Date :NA
(62) Divisional to Application Number :NA
Filing Date :NA

(71)**Name of Applicant :**
1)QUALCOMM INCORPORATED
Address of Applicant :Attn: International IP Administration 5775 Morehouse Drive San Diego CA 92121 1714 U.S.A.
(72)**Name of Inventor :**
1)KRISHNA KUMAR Raj Kumar
2)BHATTAD Kapil
3)GORE Dhananjay Ashok
4)WEI Yongbin

(57) Abstract :
When a UE does not completely decode a packet transmitted from a base station the UE may send ACK/NACK to the base station upon which the base station may retransmit the packet based on the ACK/NACK. However the ACK/NACK fails to provide the base station with information needed by the UE for completely decoding the packet. Accordingly a method an apparatus and a computer program product for wireless communication are provided. The apparatus receives a packet from a base station having a first MCS determines information to provide to the base station wherein the information comprises CQI relating to a channel condition and/or interference condition corresponding to time frequency resources allocated for the received packet and sends the information to the base station. Thereafter the apparatus re receives the packet from the base station the re received packet having a second MCS according to the information sent to the base station.

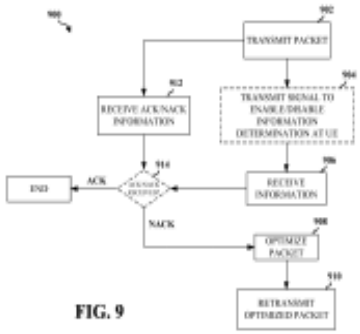

FIG. 9

No. of Pages : 55 No. of Claims : 86

(12) PATENT APPLICATION PUBLICATION
(19) INDIA
(22) Date of filing of Application :29/10/2014

(21) Application No.2178/MUMNP/2014 A
(43) Publication Date : 28/08/2015

(54) Title of the invention : CONFIGURING A TERMINAL DEVICE ACCORDING TO A CONTEXT DETERMINED BY CORRELATING DIFFERENT DATA SOURCES

(51) International classification :H04M1/725
(31) Priority Document No :61/643,829
(32) Priority Date :07/05/2012
(33) Name of priority country :U.S.A.
(86) International Application No :PCT/US2013/039967
Filing Date :07/05/2013
(87) International Publication No :WO 2013/169792
(61) Patent of Addition to Application Number :NA
Filing Date :NA
(62) Divisional to Application Number :NA
Filing Date :NA

(71)**Name of Applicant :**
1)QUALCOMM INCORPORATED
Address of Applicant :ATTN: International IP Administration 5775 Morehouse Drive San Diego California 92121 1714 U.S.A.
(72)**Name of Inventor :**
1)DING Li
2)NARAYANAN Vidya
3)LEE Jin Won
4)KUHN Lukas D.
5)GROKOP Leonard Henry
6)SADASIVAM Shankar
7)MANOLAKOS Alexandros

(57) Abstract :
Methods systems computer readable media and apparatuses for inferring context are provided. In one potential implementation first context information associated with a first duration is identified second context information is accessed to determine a context segmentation boundary; and the first context information and the second context information is then aggregated to generate an inferred segmented aggregated context. In a further implementation the first context information is used to average inferred contexts and the context segmentation boundary is used to reset a start time for averaging the first context information.

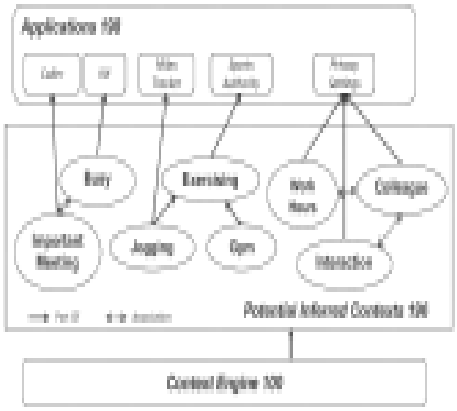

Figure 1B

No. of Pages : 46 No. of Claims : 26

(12) PATENT APPLICATION PUBLICATION
(19) INDIA
(22) Date of filing of Application :29/10/2014

(21) Application No.2179/MUMNP/2014 A
(43) Publication Date : 28/08/2015

(54) Title of the invention : USER BASED IDENTIFICATION SYSTEM FOR SOCIAL NETWORKS

(51) International classification :H04L29/06,H04L29/08
(31) Priority Document No :61/643980
(32) Priority Date :08/05/2012
(33) Name of priority country :U.S.A.
(86) International Application No :PCT/US2013/037014
Filing Date :17/04/2013
(87) International Publication No :WO 2013/169452
(61) Patent of Addition to Application Number :NA
Filing Date :NA
(62) Divisional to Application Number :NA
Filing Date :NA

(71)**Name of Applicant :**
1)QUALCOMM INCORPORATED
Address of Applicant :ATTN: International IP Administration 5775 Morehouse Drive San Diego California 92121 1714 U.S.A.
(72)**Name of Inventor :**
1)KONERTZ Anne Katrin
2)PADOVANI Niccolo A.

(57) Abstract :
Techniques disclosed herein provide for verifying the identity of a prospective social network member using an authentication process in which one or more existing members of the social network who are knowledgeable of the identity of the prospective member communicate with the prospective member in real time. During the real time communication biometric information of the prospective member can be associated with a profile for the prospective member. During or after the real time communication the existing member(s) can verify the identity of the prospective member. Once the prospective member s identity has been properly verified the prospective member can be granted access to the social network.

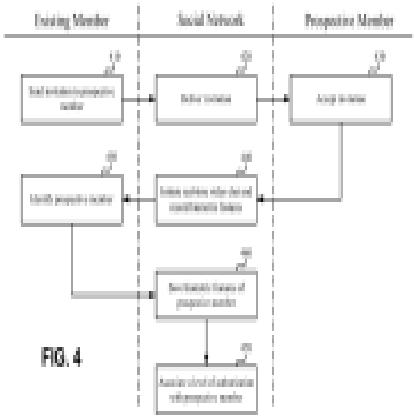

FIG. 4

No. of Pages : 29 No. of Claims : 37

(12) PATENT APPLICATION PUBLICATION
(19) INDIA
(22) Date of filing of Application :17/01/2014

(21) Application No.169/MUM/2014 A
(43) Publication Date : 28/08/2015

(54) Title of the invention : ENTITY RESOLUTION FROM DOCUMENTS

(51) International classification :G06F17/27
(31) Priority Document No :NA
(32) Priority Date :NA
(33) Name of priority country :NA
(86) International Application No :NA
Filing Date :NA
(87) International Publication No : NA
(61) Patent of Addition to Application Number :NA
Filing Date :NA
(62) Divisional to Application Number :NA
Filing Date :NA

(71)**Name of Applicant :**
1)TATA CONSULTANCY SERVICES LIMITED
Address of Applicant :Nirmal Building, 9th Floor, Nariman Point, Mumbai, Maharashtra 400021 Maharashtra India
(72)**Name of Inventor :**
1)AGARWAL, Puneet
2)SHROFF, Gautam
3)MALHOTRA, Pankaj

(57) Abstract :
The present subject matter relates to entity resolution, and in particular, relates to providing an entity resolution from documents. The method comprises obtaining the plurality of documents from at least one data source. The plurality of documents is blocked into at least one bucket based on textual similarity and inter-document references among the plurality of documents. Further, within each bucket, a merged document for each entity may be created based on an iterative match-merge technique. The iterative match-merge technique identifies, from the plurality of documents, at least one matching pair of documents and merges the at least one matching pair of documents to create the merged document for each entity. The merged documents may be merged to generate a resolved entity-document for each entity based on a graph clustering technique.

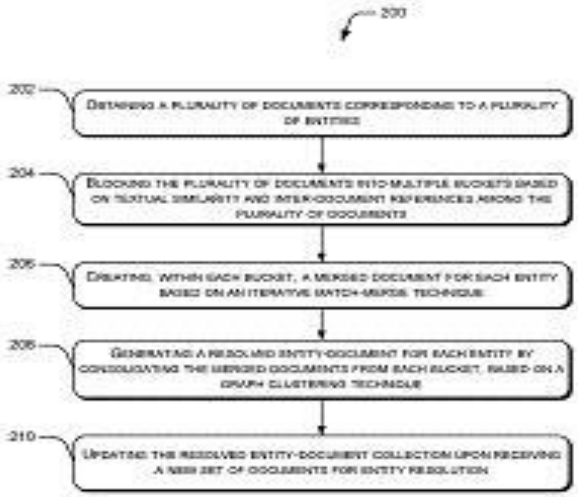

Fig. 2

No. of Pages : 35 No. of Claims : 13

(12) PATENT APPLICATION PUBLICATION
(19) INDIA
(22) Date of filing of Application :18/10/2014
(21) Application No.2087/MUMNP/2014 A
(43) Publication Date : 28/08/2015

(54) Title of the invention : METHOD FOR REDUCING ORGANIC IMPURITIES IN WASTE WATER

(51) International classification :C02F1/20,C02F1/26,C02F101/34
(31) Priority Document No :12165807.4
(32) Priority Date :26/04/2012
(33) Name of priority country :EPO
(86) International Application No :PCT/EP2013/058669
Filing Date :25/04/2013
(87) International Publication No :WO 2013/160420
(61) Patent of Addition to Application Number :NA
Filing Date :NA
(62) Divisional to Application Number :NA
Filing Date :NA

(71)**Name of Applicant :**
1)BOREALIS AG
Address of Applicant :IZD Tower Wagramerstrasse 17 19 A 1220 Vienna Austria Austria
(72)**Name of Inventor :**
1)PUROLA Veli Matti

(57) Abstract :
Use of off gas from the oxidation of cumene to cumene hydroperoxide to strip at least one organic compound from a waste water stream containing said at least one organic compound in particular to strip at least one organic compound from a waste water stream formed during phenol production.

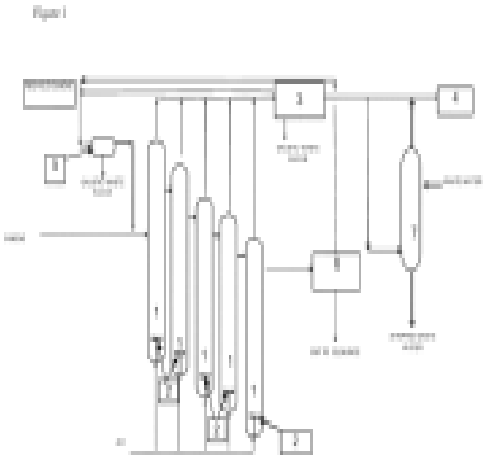

No. of Pages : 28 No. of Claims : 13

(12) PATENT APPLICATION PUBLICATION
(19) INDIA
(22) Date of filing of Application :21/01/2014

(21) Application No.209/MUM/2014 A
(43) Publication Date : 28/08/2015

(54) Title of the invention : DOUBLE STATOR DOUBLE ROTOR PERMANENT MAGNET SYNCHRONOUS MACHINE WITH CLAW POLE ARRANGEMENT FOR INNER ROTOR

(51) International classification	:H02K1/16, H02K16/00, H02K1/14, H02K1/	(71)**Name of Applicant :**
(31) Priority Document No	:NA	**1)COLLEGE OF ENGINEERING, PUNE(COEP) AN AUTONOMOUS INSTITUTE OF GOVERNMENT OF MAHARASHTRA**
(32) Priority Date	:NA	Address of Applicant :WELLESLY ROAD, SHIVAJI NAGAR, PUNE-411 005, MAHARASHTRA, INDIA. Maharashtra India
(33) Name of priority country	:NA	(72)**Name of Inventor :**
(86) International Application No	:NA	**1)CHAUDHARI, BHALCHANDRA NEMICHAND**
Filing Date	:NA	**2)GOLATGAONKAR, PRIYANKA**
(87) International Publication No	: NA	**3)REZA, MOHAMMED MOTIUR**
(61) Patent of Addition to Application Number	:NA	
Filing Date	:NA	
(62) Divisional to Application Number	:NA	
Filing Date	:NA	

(57) Abstract :
Described herein is a permanent magnet synchronous machine (100, 200, 300) comprising a rotor assembly comprising an inner rotor (126, 226, 326) having rotor windings (118, 218, 318), and an outer rotor (128, 228, 328) having permanent magnets (112, 212, 312) arranged therein, and a stator assembly (130, 210, 330) comprising a stator core, inner stator windings (120, 326) and outer stator windings (122, 332), wherein the inner rotor and the outer rotor are mounted coaxially with a shaft (102, 202, 302) and the stator core, wherein the stator assembly is selected from the group consisting of a slotted configuration, a slot-less configuration, a magnetically isolated configuration and an air-cored configuration. Figure.1

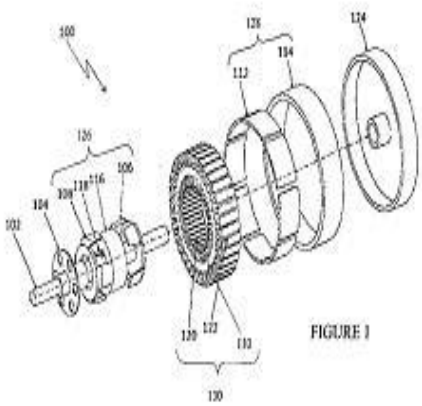

FIGURE 1

No. of Pages : 28 No. of Claims : 18

(12) PATENT APPLICATION PUBLICATION
(19) INDIA
(22) Date of filing of Application :30/10/2014

(21) Application No.2186/MUMNP/2014 A
(43) Publication Date : 28/08/2015

(54) Title of the invention : PROGRAMMABLE AND SCALABLE SEARCHING FOR CANDIDATE BLOCKS FOR INTER CODING OR/INTRA CODING

(51) International classification :H04N7/26,H04N7/36,H04N7/34
(31) Priority Document No :61/646,808
(32) Priority Date :14/05/2012
(33) Name of priority country :U.S.A.
(86) International Application No :PCT/US2013/040532
Filing Date :10/05/2013
(87) International Publication No :WO 2013/173185
(61) Patent of Addition to Application Number :NA
Filing Date :NA
(62) Divisional to Application Number :NA
Filing Date :NA

(71)**Name of Applicant :**
1)QUALCOMM INCORPORATED
Address of Applicant :ATTN: International IP Administration 5775 Morehouse Drive San Diego California 92121 1714 U.S.A.
(72)**Name of Inventor :**
1)HUANG Ling Feng
2)THIRUNAGESWARAM Hari Ganesh
3)LALGUDI Hariharan G.
4)MOHAN Sumit
5)WANG Kai

(57) Abstract :
Methods and systems for efficient searching of candidate blocks for inter coding and/or intra coding are provided. In one innovative aspect an apparatus for performing motion estimation is provided. The apparatus includes a processor configured to identify a number of candidate blocks of a frame of video data to be searched at least one candidate block corresponding to a block of another frame of the video data. The processor is further configured to select one or more of the candidate blocks to search based on a distance between the candidate blocks. The processor is also configured to select a method for searching the selected candidate blocks based on a format of the video data. The processor is also configured to estimate the motion for the block of the another frame based on the selected method and the selected candidate blocks.

FIG. 9

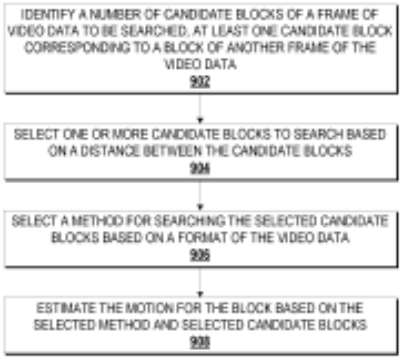

No. of Pages : 44 No. of Claims : 30

(12) PATENT APPLICATION PUBLICATION
(19) INDIA
(22) Date of filing of Application :17/10/2014

(21) Application No.2085/MUMNP/2014 A
(43) Publication Date : 28/08/2015

(54) Title of the invention : SHAFT FOR TRANSMITTING A TORQUE

(51) International classification :F01L1/02,F02B67/06,F16C27/06
(31) Priority Document No :10 2012 006 466.7
(32) Priority Date :29/03/2012
(33) Name of priority country :Germany
(86) International Application No :PCT/EP2013/055400
Filing Date :15/03/2013
(87) International Publication No :WO 2013/143884
(61) Patent of Addition to Application Number :NA
Filing Date :NA
(62) Divisional to Application Number :NA
Filing Date :NA

(71)**Name of Applicant :**
1)VOLKSWAGEN AKTIENGESELLSCHAFT
Address of Applicant :Berliner Ring 2 38440 Wolfsburg Germany
Germany
(72)**Name of Inventor :**
1)NEUENDORF Stephan
2)PUPKES Reinhold
3)POTT Ekkehard
4)WARNECKE Dirk

(57) Abstract :
The invention relates to a shaft (10) for transmitting a torque which shaft has at least one first axial section (14) in an inner spatial region (16) and one second axial section (18) in an outer spatial region (20). The two spatial regions (16 20) are separated by a wall (22) having at least one opening (24) and the shaft (10) extends through the opening (24) of the wall (22). A rolling element bearing (26) that does not support the shaft (10) is accommodated on the shaft (10) in such a way that the opening (24) of the wall (22) is closed off by means of the rolling element bearing (26) such that the opening of the wall is protected against solid foreign bodies from the outer spatial region (20).

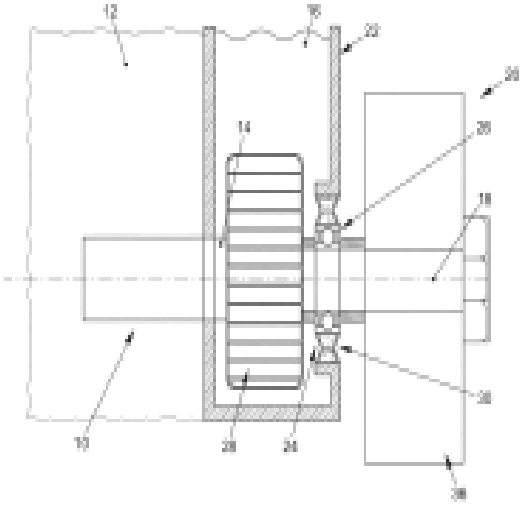

FIG. 1

No. of Pages : 16 No. of Claims : 10

(12) PATENT APPLICATION PUBLICATION
(19) INDIA
(22) Date of filing of Application :18/10/2014

(21) Application No.2086/MUMNP/2014 A
(43) Publication Date : 28/08/2015

(54) Title of the invention : METHOD FOR PROCESSING A BIOMASS CONTAINING LIGNOCELLULOSE

(51) International classification :C12P7/10,D21C1/02
(31) Priority Document No :PA 2012 70180
(32) Priority Date :11/04/2012
(33) Name of priority country :Denmark
(86) International Application No :PCT/DK2013/050097
Filing Date :10/04/2013
(87) International Publication No :WO 2013/152771
(61) Patent of Addition to Application Number :NA
Filing Date :NA
(62) Divisional to Application Number :NA
Filing Date :NA

(71)**Name of Applicant :**
1)KINETIC BIOFUEL A/S
Address of Applicant :Solbjergvej 19 DK 9574 Baelum Denmark Denmark
(72)**Name of Inventor :**
1)BONDE Torben Andreas

(57) Abstract :
There is disclosed a method for processing a biomass (for example straw) containing lignocellulose such that cellulose and hemicellulose are made accessible for further processing typically by decomposition without needing energy consuming dissolution of the biomass in water. The method includes repeated compressions of the biomass in a reciprocating piston press where loose biomass is continuously fed into a piston chamber in front of a piston which moves the loose biomass into a tubular reaction chamber in which the biomass is compressed for producing a vapour explosion and autohydrolysis under simultaneous displacement of compressed biomass through the reaction chamber. After compression the biomass can be added fluid livestock manure fluid waster water sludge etc. in a biogas plant for a subsequent biogas process.

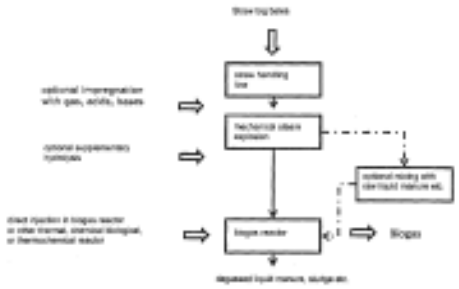

Fig. 3

No. of Pages : 39 No. of Claims : 15

(12) PATENT APPLICATION PUBLICATION
(21) Application No.2184/MUMNP/2014 A
(19) INDIA
(22) Date of filing of Application :29/10/2014
(43) Publication Date : 28/08/2015

(54) Title of the invention : PHA PRODUCING GENETICALLY ENGINEERED MICROORGANISMS

(51) International classification :C12P7/62,C12N9/10,C12N9/18
(31) Priority Document No :12163787.0
(32) Priority Date :11/04/2012
(33) Name of priority country :EPO
(86) International Application No :PCT/EP2013/057630
Filing Date :11/04/2013
(87) International Publication No :WO 2013/153180
(61) Patent of Addition to Application Number :NA
Filing Date :NA
(62) Divisional to Application Number :NA
Filing Date :NA

(71)**Name of Applicant :**
1)HELMHOLTZ ZENTRUM FR INFEKTIONSFORSCHUNG GMBH
Address of Applicant :Inhoffenstrae 7 38124 Braunschweig Germany
(72)**Name of Inventor :**
1)ARIAS Sagrario
2)BASSAS Monica
3)MOLINARI Gabriella
4)TIMMES Kenneth Nigel

(57) Abstract :
The present invention is directed at genetically engineered form of a naturally PHA producing microorganism which has an increased number of copies compared to the wild type microorganism of at least one gene coding a polyhydroxyalkanoate (PHA) synthase wherein said increased number of copies provides a balanced overproduction of said PHA synthase and eventually causing the microorganism to overproduce medium or long chain length PHAs in an amount of at least 1.2 times compared to the wild type after 24 h wherein the reference condition for assessing the overproduction is modified MM medium containing 15 mM sodium octanoate. The production of PHAs in the microorganism can in addition be favourably influenced by the inactivation of genes encoding for proteins involved in the degradation of PHA resulting in an even increased production of the microorganism of this compound without a decline in the PHA content over time. The inventive microorganisms are useful in the commercial production of PHAs. The present invention further relates to a method for the production of PHA.

No. of Pages : 41 No. of Claims : 14

(12) PATENT APPLICATION PUBLICATION
(19) INDIA
(22) Date of filing of Application :30/10/2014
(21) Application No.2185/MUMNP/2014 A
(43) Publication Date : 28/08/2015

(54) Title of the invention : METHODS AND APPARATUS FOR EFFICIENT COMMUNICATION OF SMALL DATA AMOUNTS WHILE IN IDLE MODE

(51) International classification :H04W76/02,H04W4/00
(31) Priority Document No :61/650,044
(32) Priority Date :22/05/2012
(33) Name of priority country :U.S.A.
(86) International Application No :PCT/US2013/042312
Filing Date :22/05/2013
(87) International Publication No :WO 2013/177337
(61) Patent of Addition to Application Number :NA
Filing Date :NA
(62) Divisional to Application Number :NA
Filing Date :NA

(71)**Name of Applicant :**
1)QUALCOMM INCORPORATED
Address of Applicant :Attn: International IP Administration 5775 Morehouse Drive San Diego California 92121 U.S.A.
(72)**Name of Inventor :**
1)ZHU Xipeng
2)KAPOOR Rohit
3)PICA Francesco

(57) Abstract :
A method an apparatus and a computer program product for wireless communication are provided in connection with enabling communication of small data amounts while maintaining a RRC idle mode of operation for a UE. In an example a UE is equipped to obtain a temporary radio bearer for communication of data that meets one or more criteria for small data transmission over a user plane in a UMTS or LTE based network and transmit the data over the user plane using the temporary radio bearer while maintaining the UE in an RRC idle mode. A UTRAN entity may receive over the temporary radio bearer assignment the data from a UE in an idle mode and send the data to a SGSN using a common small data connection. The SGSN may then send the data to a PGW.

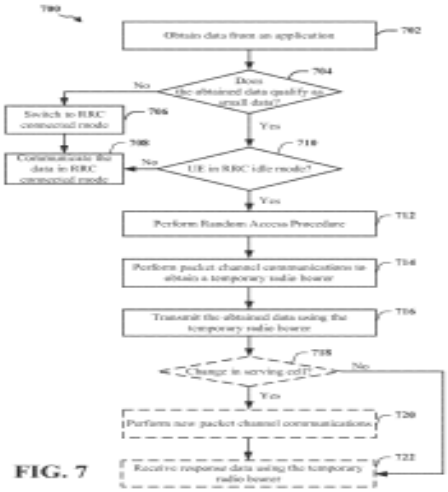

FIG. 7

No. of Pages : 53 No. of Claims : 15

(12) PATENT APPLICATION PUBLICATION
(21) Application No.187/MUM/2014 A
(19) INDIA
(22) Date of filing of Application :21/01/2014
(43) Publication Date : 28/08/2015

(54) Title of the invention : SOLID ORAL PHARMACEUTICAL COMPOSITIONS COMPRISING FIXED DOSE COMBINATION OF METFORMIN AND LINAGLIPTIN OR SALTS THEREOF

(51) International classification	:A61K9/20, A61K31/4184
(31) Priority Document No	:NA
(32) Priority Date	:NA
(33) Name of priority country	:NA
(86) International Application No	:NA
Filing Date	:NA
(87) International Publication No	: NA
(61) Patent of Addition to Application Number	:NA
Filing Date	:NA
(62) Divisional to Application Number	:NA
Filing Date	:NA

(71)**Name of Applicant :**
1)WOCKHARDT LIMITED
Address of Applicant :D-4, MIDC Area, Chikalthana, Aurangabad Maharashtra India
(72)**Name of Inventor :**
1)Naidu, Venkataramana
2)Wagh, Balasaheb Parshuram
3)Krishna Mohan L.
4)Jain, Girish Kumar

(57) Abstract :
The present invention relates to a stable pharmaceutical composition comprising metformin and linagliptin or salt thereof. In particular, the present invention relates to solid oral stable pharmaceutical composition comprising fixed dose combination of metformin and linagliptin or salt thereof. By using one or more amino sugar/s, it is possible to achieve the stable pharmaceutical composition of metformin and linagliptin. The invention further relates to use of such composition in the treatment of diabetes mellitus. A method for the preparation of such composition is also described.

No. of Pages : 20 No. of Claims : 7

(12) PATENT APPLICATION PUBLICATION
(19) INDIA
(22) Date of filing of Application :28/10/2014

(21) Application No.2158/MUMNP/2014 A
(43) Publication Date : 28/08/2015

(54) Title of the invention : AUTOMATIC INTERNAL FORMATION DEVICE FOR 12V LEAD ACID STORAGE BATTERY

(51) International classification :H01M10/12
(31) Priority Document No :201210127263.X
(32) Priority Date :27/04/2012
(33) Name of priority country :China
(86) International Application No :PCT/CN2013/000069
Filing Date :22/01/2013
(87) International Publication No :WO 2013/159556
(61) Patent of Addition to Application Number :NA
Filing Date :NA
(62) Divisional to Application Number :NA
Filing Date :NA

(71)**Name of Applicant :**
1)ZIBO XINXU POWER TECHNOLOGY CO. LTD.
Address of Applicant :Rm 602 Building C High Technology Pioneering Park No.135 ZhengTong Rd High tech Zone Zibo Shandong 255086 China
(72)**Name of Inventor :**
1)HOU Jianxin
2)LI, ZONGQIANG
3)LIANG, YINGLI

(57) Abstract :
An automatic internal formation device for 12V lead acid storage battery belongs to the technical field of a lead acid storage battery comprises a diluted acid bath a high acid bath a work bath an acid pump an acid inlet device an acid return device a diluted acid conversion valve and a concentrated acid conversion valve which are arranged on a support frame and is characterized in that the diluted acid bath is connected with the diluted acid conversion valve the acid return device the acid pump and the work bath in turn the concentrated acid bath is connected with the concentrated acid conversion valve the acid return device the acid pump and the work bath in turn the work bath also forms a loop with the acid return device an acid outlet device and the acid pump an automatic conveying guide rail is arranged on the support frame and can achieve the spacing and fixing position arrangement of the storage battery automatically and precisely. The degree of automation of the invention is high. The single cell can automatically load and unload from the production line and the degree of the specifically use is high.

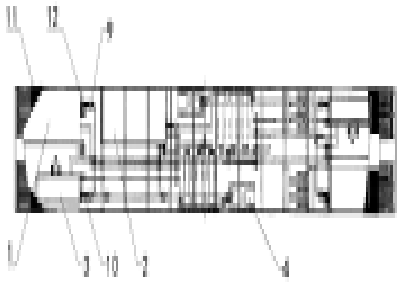

No. of Pages : 14 No. of Claims : 4

(12) PATENT APPLICATION PUBLICATION
(19) INDIA
(22) Date of filing of Application :28/10/2014

(21) Application No.2159/MUMNP/2014 A
(43) Publication Date : 28/08/2015

(54) Title of the invention : SYSTEMS AND METHODS FOR GROUP COMMUNICATION USING A MOBILE DEVICE WITH MODE DEPENDING ON USER PROXIMITY OR DEVICE POSITION

(51) International classification :H04M1/60,G06F1/16
(31) Priority Document No :13/479,251
(32) Priority Date :23/05/2012
(33) Name of priority country :U.S.A.
(86) International Application No :PCT/US2013/041767
Filing Date :20/05/2013
(87) International Publication No :WO 2013/177015
(61) Patent of Addition to Application Number :NA
Filing Date :NA
(62) Divisional to Application Number :NA
Filing Date :NA

(71)**Name of Applicant :**
1)QUALCOMM INCORPORATED
Address of Applicant :Attn: International Ip Administration 5775 Morehouse Drive San Diego California 92121 U.S.A.
(72)**Name of Inventor :**
1)SUBBARAMOO Shobha M.
2)LINDNER Mark A..

(57) Abstract :
Methods and systems for controlling group communications using a mobile device includes detecting a motion of the mobile device corresponding to a user placing the device on a surface maintain a communication session with another mobile device while the user is detected in proximity to the first mobile device and entering a non active communication mode when the user is not detected in proximity to the device. The communication session may be maintained for a time out period before entering the non active mode. Further methods and systems include transitioning to a non active communication mode in response to detecting a motion of the mobile device corresponding to a user placing the device on a surface.

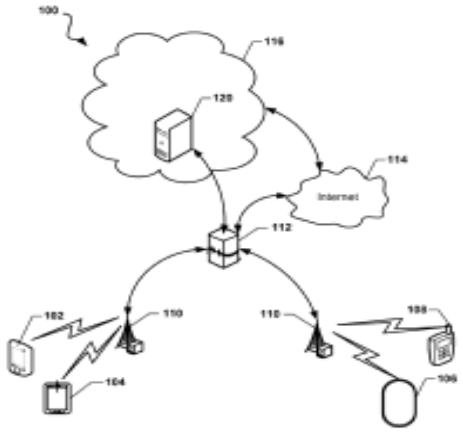

FIG. 1

No. of Pages : 94 No. of Claims : 72

(12) PATENT APPLICATION PUBLICATION
(19) INDIA
(22) Date of filing of Application :04/01/2014

(21) Application No.2255/MUM/2013 A
(43) Publication Date : 28/08/2015

(54) Title of the invention : FLANGED HINGES

(51) International classification	:B65D 25/06	(71)**Name of Applicant :**
(31) Priority Document No	:NA	**1)Shailaja Suroju**
(32) Priority Date	:NA	Address of Applicant :Flat No:103, Aster-IV, Sukhwani campus, Vallabh nagar, Pimpri, Pune 411018, Maharashtra Maharashtra India
(33) Name of priority country	:NA	(72)**Name of Inventor :**
(86) International Application No	:NA	**1)Shailaja Suroju**
Filing Date	:NA	
(87) International Publication No	: NA	
(61) Patent of Addition to Application Number	:NA	
Filing Date	:NA	
(62) Divisional to Application Number	:NA	
Filing Date	:NA	

(57) Abstract :
The present invention provides a flanged hinge for hingebly connecting a fixed element and a moving element of furniture. The flanged hinge includes a moving member to be secured with a moving element of the furniture, which further includes a flange member with a securing member for securing with the moving element of the furniture. The flange member and the securing member extend perpendicularly with respect to each other. A connecting member is provided for connecting the edges of the flange member and the securing member by configuring a curved cavity there-between. An opening is configured on the connected member transversely near a portion connecting with the flange member for passing a pivotal pin there through. A fixed member is secured with a fixed element of the furniture, which includes a first member having openings adapted to connect with the connecting member by aligning the openings of the first member with the opening of the connecting member of the moving member and securing the pivot pin through all the openings to configure a hinge there-between. A second member is extending transversely from the first member with a loop there between, the second members is secured to fixed element of the furniture.

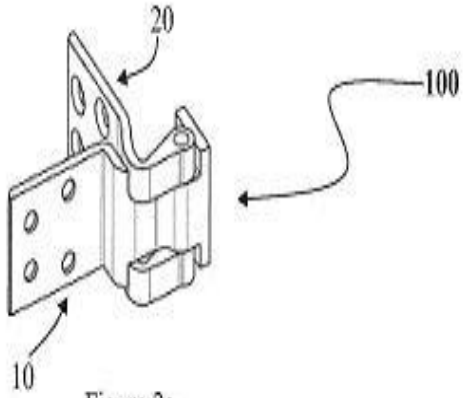

Figure 2a

No. of Pages : 31 No. of Claims : 8

(12) PATENT APPLICATION PUBLICATION
(19) INDIA
(22) Date of filing of Application :14/01/2014
(21) Application No.119/MUM/2014 A
(43) Publication Date : 28/08/2015

(54) Title of the invention : SYSTEM AND METHOD FOR IDENTIFYING RELATED ELEMENTS WITH RESPECT TO A QUERY IN A REPOSITORY

(51) International classification	:G06F 17/00	
(31) Priority Document No	:NA	
(32) Priority Date	:NA	
(33) Name of priority country	:NA	
(86) International Application No	:NA	
Filing Date	:NA	
(87) International Publication No	: NA	
(61) Patent of Addition to Application Number	:NA	
Filing Date	:NA	
(62) Divisional to Application Number	:NA	
Filing Date	:NA	

(71)**Name of Applicant :**
1)Tata Consultancy Services Limited
Address of Applicant :Nirmal Building, 9th Floor, Nariman Point, Mumbai 400021, Maharashtra, India Maharashtra India
(72)**Name of Inventor :**
1)CHILAKAMARRI, Srikar
2)RISHITHA , Chalasani

(57) Abstract :
The present disclosure provides system(s) and method(s) for identifying a relationship of an unrecognized element with respect to a query in a repository. The method comprises receiving the query from a user. The query is mapped with plurality of knowledge references in the repository to identify a multitude of words associated with the query. The query is mapped with respect to relationship of the multitude of words and the unrecognized element. The method determines a number of occurrences of the one or more elements related to the unrecognized element of the query. The method further groups the occurrences of one or more elements related to the unrecognized element of the query. The method assigns a weightage to an element from the one or more elements based upon the number of occurrences. The method determines relevancy of the query using a mathematical derivation/probability determination based on the weightage of the element.

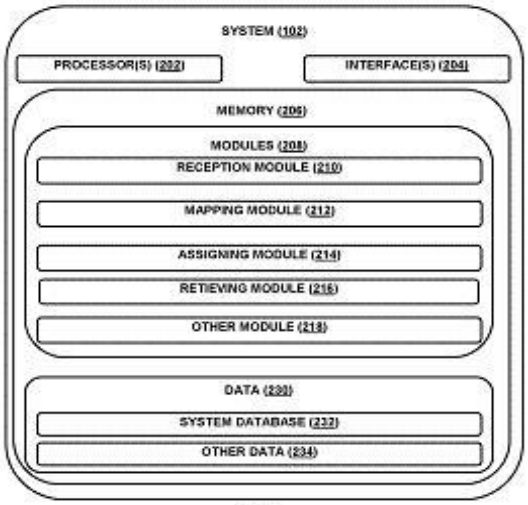

FIG. 2

No. of Pages : 33 No. of Claims : 13

(12) PATENT APPLICATION PUBLICATION
(19) INDIA
(22) Date of filing of Application :15/01/2014
(21) Application No.127/MUM/2014 A
(43) Publication Date : 28/08/2015

(54) Title of the invention : PREPARATION OF PYRIDINIUM TRIFLUORO ACETATE EXHIBITING LIQUID CRYSTALLINE CHARACTERISTICS.

(51) International classification	:C07D 213/00
(31) Priority Document No	:NA
(32) Priority Date	:NA
(33) Name of priority country	:NA
(86) International Application No	:NA
Filing Date	:NA
(87) International Publication No	: NA
(61) Patent of Addition to Application Number	:NA
Filing Date	:NA
(62) Divisional to Application Number	:NA
Filing Date	:NA

(71)**Name of Applicant :**
1)DR. M. M. V. RAMANA
Address of Applicant :DEPARTMENT OF CHEMISTRY, UNIVERSITY OF MUMBAI, VIDYANAGARI, SANTACRUZ (EAST), MUMBAI-400 098, INDIA. Maharashtra India
(72)**Name of Inventor :**
1)DR. M. M. V. RAMANA
2)ZOTE SANTOSH WAGHU
3)NAVALE DINESH NIVRUTI

(57) Abstract :
The present work relates to the liquid crystalline characteristics exhibited by pyridinium trifluoroacetate. This salt exhibited broad and stable mesophase.

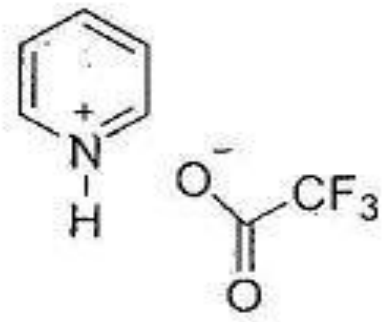

(Fig. 1)

No. of Pages : 7 No. of Claims : 4

(12) PATENT APPLICATION PUBLICATION
(19) INDIA
(22) Date of filing of Application :16/01/2014

(21) Application No.153/MUM/2014 A
(43) Publication Date : 28/08/2015

(54) Title of the invention : A RUBBER BLEND COMPOSITION.

(51) International classification	:C08L9/00, B60C1/00
(31) Priority Document No	:NA
(32) Priority Date	:NA
(33) Name of priority country	:NA
(86) International Application No	:NA
Filing Date	:NA
(87) International Publication No	: NA
(61) Patent of Addition to Application Number	:NA
Filing Date	:NA
(62) Divisional to Application Number	:NA
Filing Date	:NA

(71)**Name of Applicant :**
1)RELIANCE INDUSTRIES LIMITED
Address of Applicant :3RD FLOOR, MAKER CHAMBER-IV 222, NARIMAN POINT, MUMBAI- 400 021, MAHARASHTRA, INDIA Maharashtra India
(72)**Name of Inventor :**
1)JASRA RAKSH VIR
2)BASAK GANESH C
3)MAITI MADHUCHHANDA
4)SRIVASTAVA VIVEK KUMAR

(57) Abstract :
A rubber blend composition that comprises a blend of styrene butadiene rubber, polybutadiene rubber and a modified EPDM rubber is disclosed in the present disclosure wherein the rubber blend composition is suitably used as a potential alternative to the existing rubber blend compositions in different rubber field applications.

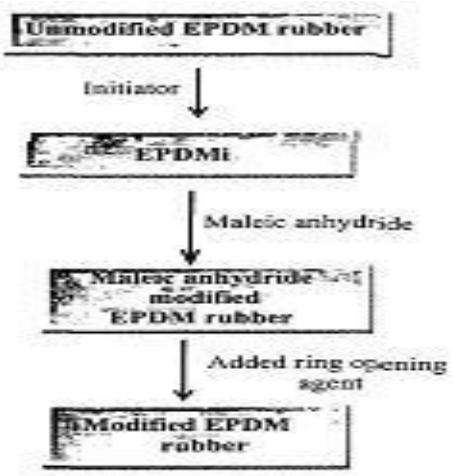

FIGURE 1

No. of Pages : 34 No. of Claims : 14

(12) PATENT APPLICATION PUBLICATION
(21) Application No.2663/MUMNP/2014 A
(19) INDIA
(22) Date of filing of Application :30/12/2014
(43) Publication Date : 28/08/2015

(54) Title of the invention : METHOD FOR PRODUCING NUCLEATOR MASTERBATCH

(51) International classification :C08F2/44,C08J3/22,C08K5/098
(31) Priority Document No :2012-134890
(32) Priority Date :14/06/2012
(33) Name of priority country :Japan
(86) International Application No :PCT/JP2013/065006
Filing Date :30/05/2013
(87) International Publication No :WO 2013/187240
(61) Patent of Addition to Application Number :NA
Filing Date :NA
(62) Divisional to Application Number :NA
Filing Date :NA

(71)**Name of Applicant :**
1)ADEKA CORPORATION
Address of Applicant :2 35 Higashiogu 7 chome Arakawa ku Tokyo 1160012 Japan
(72)**Name of Inventor :**
1)KAWAMOTO Naoshi
2)AYABE Takashi
3)SAKAI Atsushi
4)SEGUCHI Tetsuya

(57) Abstract :
Provided is a method for producing a nucleator masterbatch which is able to produce a nucleator masterbatch that is capable of improving the transparency and physical properties of an olefin resin. A method for producing a nucleator masterbatch obtained by blending a nucleator with an olefin polymer which is characterized by comprising a step wherein an olefin monomer is polymerized while blending a material that is obtained by dissolving a nucleator component in an organic aluminum compound or in an organic aluminum compound and an organic solvent before or during the polymerization of the olefin monomer such that the amount of the nucleator component is 0.05 20 parts by mass relative to 100 parts by mass of the olefin polymer that is obtained by polymerizing the olefin monomer.

No. of Pages : 126 No. of Claims : 33

(12) PATENT APPLICATION PUBLICATION
(21) Application No.2664/MUMNP/2014 A
(19) INDIA
(22) Date of filing of Application :30/12/2014
(43) Publication Date : 28/08/2015

(54) Title of the invention : TITANIUM DIOXIDE CONTAINING AND CARBONATE CONTAINING COMPOSITE PIGMENTS AND METHOD FOR PRODUCING SAME

(51) International classification :C09C1/00,C09C1/36
(31) Priority Document No :10 2012 012 899.1
(32) Priority Date :28/06/2012
(33) Name of priority country :Germany
(86) International Application No :PCT/EP2013/001828
Filing Date :20/06/2013
(87) International Publication No :WO 2014/000874
(61) Patent of Addition to Application Number :NA
Filing Date :NA
(62) Divisional to Application Number :NA
Filing Date :NA

(71)**Name of Applicant :**
1)KRONOS INTERNATIONAL INC.
Address of Applicant :Peschstr. 5 51373 Leverkusen Germany
(72)**Name of Inventor :**
1)WILKENHOENER Uwe
2)MERSCH Frank

(57) Abstract :
The invention relates to the production of pigment containing composite pigment particles and to the use thereof in order to improve the pigment light scattering efficiency in coatings plastics and laminate. The composite pigment particles contain titanium dioxide pigment particles at least one inorganic and/or organic filler as an extender and calcium carbonate which is precipitated in the process. The filler is preferably selected from the group consisting of Ca Ca Mg and Mg carbonates natural and synthetic silicon dioxide and oxides. The composite particles are produced in a combined process consisting of precipitation and dispersion. The use of the composite pigment particles according to the invention said particles consisting of fillers and titanium dioxide pigment allows the use of less pigment without or with only a low loss of optical properties depending on the selected combination. Alternatively even greater values can be achieved with respect to tinting strength for example when the same pigment content is used. In particular a part or all of the TiO content in the user system can be replaced with the composite pigment particles according to the invention.

No. of Pages : 22 No. of Claims : 16

(12) PATENT APPLICATION PUBLICATION
(19) INDIA
(22) Date of filing of Application :17/01/2014

(21) Application No.161/MUM/2014 A
(43) Publication Date : 28/08/2015

(54) Title of the invention : IMPROVED SYSTEM OF GENERATING ENERGY FROM WASTES AND PROCESS THEREOF.

(51) International classification	:F25B27/02, F01K27/00, F23G5/46, F01K2	(71)**Name of Applicant :** **1)TRANSPARENT ENERGY SYSTEMS PVT. LTD.,** Address of Applicant :PUSHPA HEIGHTS 1ST FLOOR, BIBVEWADI CORNER, PUNE-SATARA ROAD, PUNE-411 037, M.S., INDIA. Maharashtra India
(31) Priority Document No	:NA	
(32) Priority Date	:NA	(72)**Name of Inventor :**
(33) Name of priority country	:NA	**1)ATRE ASHOK DATTATRAYA**
(86) International Application No	:NA	**2)APTE AJIT ULHAS**
Filing Date	:NA	
(87) International Publication No	: NA	
(61) Patent of Addition to Application Number	:NA	
Filing Date	:NA	
(62) Divisional to Application Number	:NA	
Filing Date	:NA	

(57) Abstract :
The invention relates to an improved system of generating energy from wastes and process thereof, comprises collecting the waste in Completely enclosed fully mechanized warehouse (1) equipped with grab crane (46) and shredder (2) connected to conveyor (47) a feeding means of shredded waste to the inlet of a hot air dryer(4) having an outlet to drop the dried waste to a first conveyor(7); a first hopper(8) to receive the said dried waste from the said conveyor(7); a second hopper (9) containing supplementary fuel; the said first and second hoppers having an controlled discharge outlet to feed fuel to a combustion grate(17) located at the bottom of Refractory lined furnace (49) connected to a post combustion chamber (18) in which the temperature required for destruction of dioxins is maintained by hot combustion gases generated by combusting coal in a separate coal combustion furnace (33); an enclosed heat recovery unit (19) having flue gas passage path provided with an evaporator (34) having an inlet connected to a steam drum (45) and an economizer (35) inlet connected to the outlet of a economizer (58) having inlet connected to de-aerator tank (22) through a boiler feed pump(36); the outlets of the said evaporator (34) and economizer (35) connected to individual inlet provided on the said steam drum(45); a steam super heater tube coil(38), heated by the flue gases generated by the supplementary fuel combusted in a separate combustion furnace (57), having inlet connected to the said drum(45) ; a generator turbine(21) having steam inlet connected to super heater tube coil(38) outlet; an air cooled condenser(20) inlet connected to the said turbine(21) exhaust steam outlet; a chimney (32)having exhaust flue gases inlet connected through a ID fan(31) to the exhaust flue gases out let of the said heat recovery unit through a flue gas cleaning system.

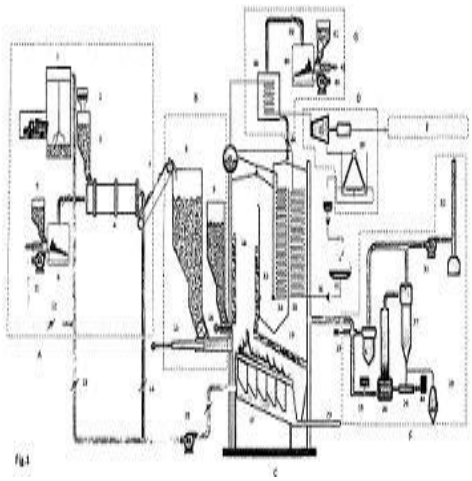

No. of Pages : 16 No. of Claims : 9

(12) PATENT APPLICATION PUBLICATION
(21) Application No.202/MUM/2014 A
(19) INDIA
(22) Date of filing of Application :21/01/2014
(43) Publication Date : 28/08/2015

(54) Title of the invention : METHOD FOR FACILITATING REMOTE PURCHASING, STORING, SHIPPING AND DELIVERY OF ITEMS USING COMMUNICATION DEVICES

(51) International classification	:G06Q30/00, G06Q20/00, G06Q10/00	(71)**Name of Applicant :** **1)AMIT KUMAR JAIN** Address of Applicant :F/1402, ROYAL CLASSIC BUILDING, LOKHANDWALA, LINK ROAD, ANDHERI (WEST)-400 053, MAHARASHTRA, INDIA. Maharashtra India
(31) Priority Document No	:NA	
(32) Priority Date	:NA	
(33) Name of priority country	:NA	(72)**Name of Inventor :** **1)AMIT KUMAR JAIN**
(86) International Application No	:NA	
Filing Date	:NA	
(87) International Publication No	: NA	
(61) Patent of Addition to Application Number	:NA	
Filing Date	:NA	
(62) Divisional to Application Number	:NA	
Filing Date	:NA	

(57) Abstract :
The present invention is a method for facilitating remote purchasing and/or storing and/or shipping and/or delivering of items using communication devices. This method may be implemented to enable a person to find, contact and communicate with people all over the world either to use their services for making remote purchases and/or shipping and/or storage and/or delivery of items, or render services for the same.ln the method, a social computing based means is implemented that enables its users to connect with other users for the aforementioned purpose. Said social computing based means can be accessed and used from a users communication device using an internet connection. Said social computing based means enables a user to act either as a user who provides services to other users as a purchasing user and/or storing user and/or shipping user and/or delivering user, or act as an end user to render services provided by other users, or act as all simultaneously.

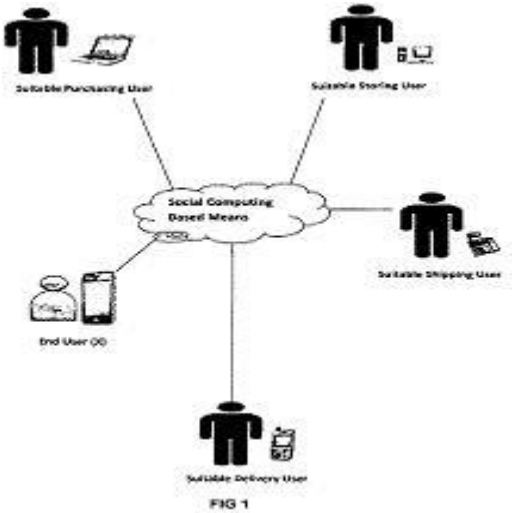

FIG 1

No. of Pages : 58 No. of Claims : 23

(12) PATENT APPLICATION PUBLICATION
(19) INDIA
(22) Date of filing of Application :31/12/2014

(21) Application No.2674/MUMNP/2014 A
(43) Publication Date : 28/08/2015

(54) Title of the invention : PLANTSURFACE STRUCTURE AND MODULES AND METHOD FOR FORMING THE SAME

(51) International classification :E01C13/08,E02D17/20,E03F1/00
(31) Priority Document No :PCT/NL2012/050476
(32) Priority Date :05/07/2012
(33) Name of priority country :Netherlands
(86) International Application No :PCT/EP2013/064245
Filing Date :05/07/2013
(87) International Publication No :WO 2014/006180
(61) Patent of Addition to Application Number :NA
Filing Date :NA
(62) Divisional to Application Number :NA
Filing Date :NA

(71)**Name of Applicant :**
1)PERMAVOID LIMITED
Address of Applicant :Christopher House 94B London Road Leicester LE2 OQS U.K.
(72)**Name of Inventor :**
1)VAN RAAM Carolus Hermanus
2)SHUTTLEWORTH Andrew Bryan
3)CULLETON Paul David

(57) Abstract :
Plantsurface structure comprising one of an array of plastic base elements each base element having a deck carried by a series of pillar elements wherein the deck is provided with at least a number of the pillar elements have an open top end in said deck wherein at least a membrane is placed over said deck and is provided with slits or cut outs or water permeable elements such that they open into at least some of the open top ends of pillars wherein a growing medium is provided on the membrane and a growing medium is provided in said pillars the growing medium in said pillars preferably being in fluid contact with the growing medium on said membrane.

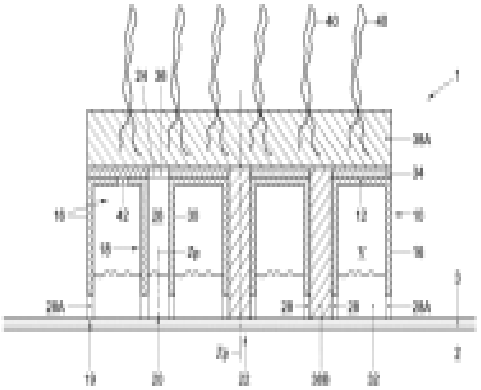

Fig. 1

No. of Pages : 30 No. of Claims : 21

(12) PATENT APPLICATION PUBLICATION
(19) INDIA
(22) Date of filing of Application :21/10/2014

(21) Application No.2101/MUMNP/2014 A
(43) Publication Date : 28/08/2015

(54) Title of the invention : PROGNOSIS OF ADVERSE EVENTS IN PATIENTS WITH SUSPECTED CHRONIC HEART FAILURE

(51) International classification	:G01N33/68	(71)**Name of Applicant :**
(31) Priority Document No	:12163921.5	**1)B.R.A.H.M.S GMBH**
(32) Priority Date	:12/04/2012	Address of Applicant :Neuendorfstrae 25 16761 Hennigsdorf Germany
(33) Name of priority country	:EPO	
(86) International Application No	:PCT/EP2013/057626	(72)**Name of Inventor :**
Filing Date	:11/04/2013	**1)STRUCK Joachim**
(87) International Publication No	:WO 2013/153177	**2)Cleland John GF**
(61) Patent of Addition to Application Number	:NA	
Filing Date	:NA	
(62) Divisional to Application Number	:NA	
Filing Date	:NA	

(57) Abstract :
The present invention is in the field of clinical diagnostics. Particularly the present invention relates to the prognosis of adverse events in patients with stable chronic heart failure or being suspected of having stable chronic heart failure by determination of the level of Procalcitonin (PCT).

No. of Pages : 32 No. of Claims : 14

(12) PATENT APPLICATION PUBLICATION
(19) INDIA
(22) Date of filing of Application :21/10/2014

(21) Application No.2102/MUMNP/2014 A
(43) Publication Date : 28/08/2015

(54) Title of the invention : LABORATORY CONDENSERS WITH PASSIVE HEAT EXCHANGE

(51) International classification :B01D5/00,F28F1/42,F28F21/00
(31) Priority Document No :1206103.2
(32) Priority Date :05/04/2012
(33) Name of priority country :U.K.
(86) International Application No :PCT/GB2013/050897
Filing Date :05/04/2013
(87) International Publication No :WO 2013/150318
(61) Patent of Addition to Application Number :NA
Filing Date :NA
(62) Divisional to Application Number :NA
Filing Date :NA

(71)**Name of Applicant :**
1)R.B. RADLEY & COMPANY LIMITED
Address of Applicant :Shire Hill Saffron Walden Essex CB11 3AZ U.K.
(72)**Name of Inventor :**
1)GRIST Matthew
2)PERKINS David

(57) Abstract :
The present invention relates to a condenser for condensing gasses. The condenser comprises: an inner tube (1) having a bore (3) therethrough; an outer tube (2) having a bore (8) therethrough and two ends the inner tube (1) passing through the bore of the outer tube (2); and a seal (15 16) at each end of the outer tube. The outer tube has exterior and interior fins and is sealed to the inner tube so as to define a sealed space (11) between the inner tube and the outer tube. The space (11) is adapted to contain a liquid in contact with the inner tube (1) and the outer tube (2). The invention further relates to a method of condensing a gas using the condenser a process of making a chemical using the condenser and a kit adapted to be assembled into the condenser.

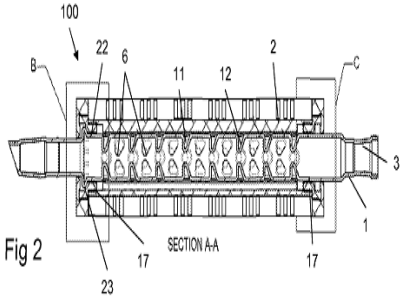

Fig 2

No. of Pages : 27 No. of Claims : 28

(12) PATENT APPLICATION PUBLICATION
(19) INDIA
(22) Date of filing of Application :30/12/2014

(21) Application No.2670/MUMNP/2014 A
(43) Publication Date : 28/08/2015

(54) Title of the invention : A MODULAR SYSTEM FOR REAL TIME EVALUATION AND MONITORING OF A MACHINING PRODUCTION LINE OVERALL PERFORMANCES CALCULATED FROM EACH GIVEN WORKPIECE TOOL AND MACHINE

(51) International classification :G05B19/418,G06F19/00,G05B19/4065
(31) Priority Document No :61/669,675
(32) Priority Date :10/07/2012
(33) Name of priority country :U.S.A.
(86) International Application No :PCT/IL2013/000058
Filing Date :02/07/2013
(87) International Publication No :WO 2014/009942
(61) Patent of Addition to Application Number :NA
Filing Date :NA
(62) Divisional to Application Number :NA
Filing Date :NA

(71)**Name of Applicant :**
1)TIANO Matitiahu
Address of Applicant :31 Shivtei Israel st. P.O. Box 57355 46500 Herzliya Israel
(72)**Name of Inventor :**
1)TIANO Matitiahu

(57) Abstract :
The present invention provides a modular system and method for real time evaluation and monitoring of a machining production line overall performances calculated from each given metal workpiece consumable tool and machine. The present invention is configured for an iterative and incremental calculation and evaluation of the machining production line overall performances by incrementally evaluating individual workpiece s performances consumable tools performances and machine s performances extracted from the data of a plurality of workpieces and machines. The present invention is further configured for comparing the workpiece s performances to a similar workpiece s best performance extracted from the evaluation of a plurality of the similar workpieces. The present invention is further configured for the identification of significant process faults and their cause. The present invention is further configured for the analysis of the applied engineering plan effectiveness using a defined engineering score.

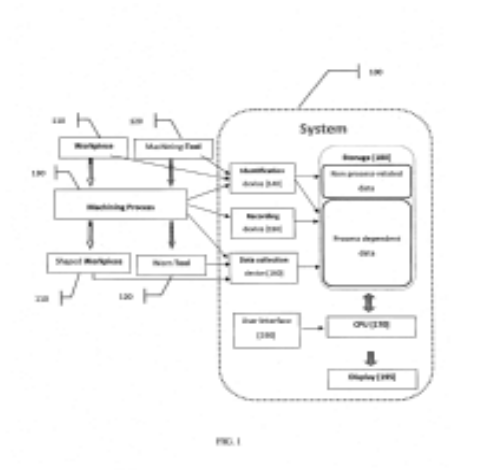

FIG. 1

No. of Pages : 64 No. of Claims : 48

(12) PATENT APPLICATION PUBLICATION
(19) INDIA
(22) Date of filing of Application :30/12/2014
(21) Application No.2671/MUMNP/2014 A
(43) Publication Date : 28/08/2015

(54) Title of the invention : OIL SEPARATOR

(51) International classification :F04B39/16,B01D45/08,B60T17/00
(31) Priority Document No :2012-148646
(32) Priority Date :02/07/2012
(33) Name of priority country :Japan
(86) International Application No :PCT/JP2013/055190
Filing Date :27/02/2013
(87) International Publication No :WO 2014/006928
(61) Patent of Addition to Application Number :NA
Filing Date :NA
(62) Divisional to Application Number :NA
Filing Date :NA

(71)**Name of Applicant :**
1)NABTESCO AUTOMOTIVE CORPORATION
Address of Applicant :7 9 Hirakawa cho 2 chome Chiyoda ku Tokyo 1020093 Japan
(72)**Name of Inventor :**
1)SUGIO Takuya
2)MINATO Ichiro

(57) Abstract :
An oil separator is provided with: a casing having an introduction opening for air and a discharge opening for air; an expansion chamber for expanding air introduced therein through the introduction opening; a housing member connecting to the expansion chamber in the vertical direction; a drainage accumulation section provided below the housing member; and a connection hose having an oil separator connection end for connection to the introduction opening and having an air dryer connection end for connection to an air dryer. The connection hose is configured so that the oil separator connection end is located higher than the air dryer connection end.

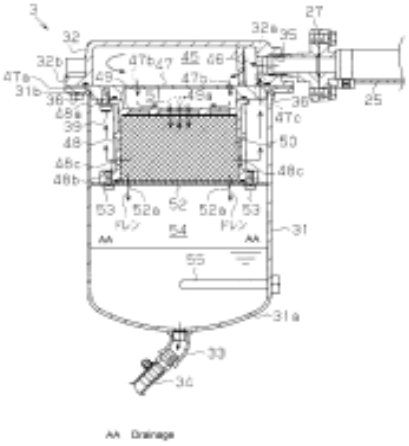

No. of Pages : 20 No. of Claims : 5

(12) PATENT APPLICATION PUBLICATION
(19) INDIA
(22) Date of filing of Application :17/01/2014
(21) Application No.163/MUM/2014 A
(43) Publication Date : 28/08/2015

(54) Title of the invention : LIGHTER THAN AIR PLATFORM FOR OPTIMIZED SOLAR POWER GENERATION

(51) International classification	:B64D41/00,B64B1/06, B64B1/58, H02S10/00	(71)**Name of Applicant :**
(31) Priority Document No	:NA	**1)INDIAN INSTITUTE OF TECHNOLOGY, BOMBAY**
(32) Priority Date	:NA	Address of Applicant :INDIAN INSTITUTE OF TECHNOLOGY, BOMBAY, POWAI, MUMBAI-400 076, INDIA. Maharashtra India
(33) Name of priority country	:NA	(72)**Name of Inventor :**
(86) International Application No	:NA	**1)KUNTAL GHOSH**
Filing Date	:NA	**2)ANIRBAN GUHA**
(87) International Publication No	: NA	**3)SIDDHARTHA P DUTTAGUPTA**
(61) Patent of Addition to Application Number	:NA	
Filing Date	:NA	
(62) Divisional to Application Number	:NA	
Filing Date	:NA	

(57) Abstract :
Title: Lighter than air platform for optimized solar power generation A Lighter than air platform for optimized solar power generation is disclosed. The proposed system is comprised of five modules namely the solar power generation module, mounting module, positioning module, power module and monitoring module which work in a synchronised way to enable optimised solar power generation.

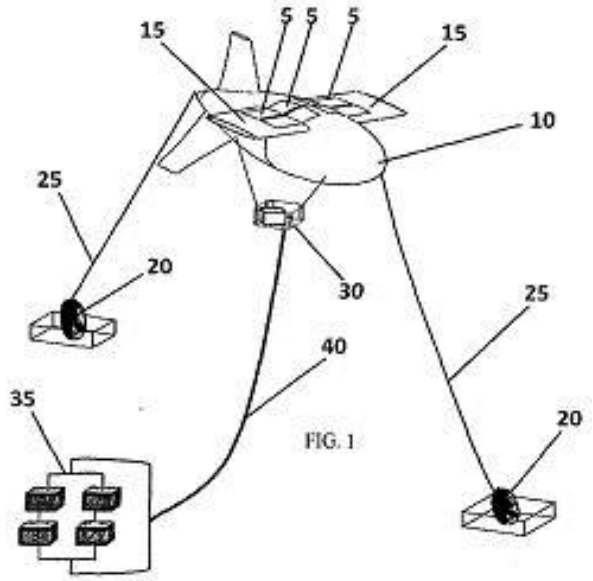

FIG. 1

No. of Pages : 33 No. of Claims : 12

(12) PATENT APPLICATION PUBLICATION
(19) INDIA
(22) Date of filing of Application :21/01/2014

(21) Application No.212/MUM/2014 A
(43) Publication Date : 28/08/2015

(54) Title of the invention : AMORPHOUS FORM OF SITAGLIPTIN FREE BASE

(51) International classification	:A61K31/4985, C07D239/557	(71)**Name of Applicant :**
(31) Priority Document No	:NA	**1)CADILA HEALTHCARE LIMITED**
(32) Priority Date	:NA	Address of Applicant :CADILA HEALTHCARE LIMITED ZYDUS TOWER, SATELLITE CROSS ROADS AHMEDABAD-380015 Gujarat India
(33) Name of priority country	:NA	
(86) International Application No	:NA	(72)**Name of Inventor :**
Filing Date	:NA	**1)DWIVEDI SHRI PRAKASH DHAR**
(87) International Publication No	: NA	**2)KHERA BRIJ**
(61) Patent of Addition to Application Number	:NA	**3)SINGH KUMAR KAMLESH**
Filing Date	:NA	**4)SOLANKI KIRTIPALSINH SAJJANSINH**
(62) Divisional to Application Number	:NA	
Filing Date	:NA	

(57) Abstract :
AMORPHOUS FORM OF SITAGLIPTIN FREE BASE The present invention provides an amorphous form of sitagliptin free base of Formula (I). The invention further provides a process for preparation of an amorphous form of sitagliptin free base. The process comprises a) providing a solution or suspension of sitagliptin free base in one or more solvents; and b) obtaining the amorphous form of sitagliptin free base by the removal of the solvent. (I)

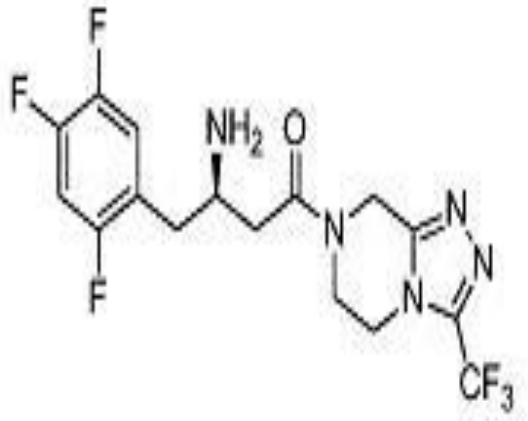

(I)

No. of Pages : 23 No. of Claims : 20

(12) PATENT APPLICATION PUBLICATION
(21) Application No.2329/MUM/2014 A
(19) INDIA
(22) Date of filing of Application :18/07/2014
(43) Publication Date : 28/08/2015

(54) Title of the invention : VIRTUAL VIDEO PATROL SYSTEM AND COMPONENTS THEREFOR

(51) International classification :H04N5/232
(31) Priority Document No :61/847,585
(32) Priority Date :18/07/2013
(33) Name of priority country :U.S.A.
(86) International Application No :PCT//
Filing Date :01/01/1900
(87) International Publication No : NA
(61) Patent of Addition to Application Number :NA
Filing Date :NA
(62) Divisional to Application Number :NA
Filing Date :NA

(71)**Name of Applicant :**
1)SPO SYSTEMS INC. LIMITED
Address of Applicant :Room 502-3 Commercial House, 35 Queen™s Road Central, Hongkong Hongkong(China)
(72)**Name of Inventor :**
1)Michael (Micha) Shafir

(57) Abstract :
ABSTRACT TITLE.: VIRTUAL VIDEO PATROL SYSTEM AND COMPONENTS THEREFOR A system and corresponding components for providing a virtual video patrol functionality comprised of a plurality of sensor units and a monitoring station. The sensor units are preferably deployed in a configuration such that physically adjacent sensor units have overlapping fields of view. Each sensor unit is preferably configured to generate and transmit an alert to the monitoring station upon the detection of an event. The monitoring station may request video data from a specifically addressed sensor unit as well as additional sensor units with fields of view overlapping with the specifically addressed sensor unit. Requested video data from sensor units may be processed and combined using stitching algorithms. A user input device and display in the monitoring station allows virtual panning of the combined video image. The sensor units are preferably implemented as street light sensor units combined with a street light illumination source.

No. of Pages : 53 No. of Claims : 22

(12) PATENT APPLICATION PUBLICATION
(21) Application No.118/MUM/2014 A
(19) INDIA
(22) Date of filing of Application :14/01/2014
(43) Publication Date : 28/08/2015

(54) Title of the invention : PROCESS FOR THE PREPARATION OF TENOFOVIR ALAFENAMIDE AND ITS PHARMACEUTICALLY ACCEPTABLE SALTS

(51) International classification	:C07D473/34, A61K31/52, A61K31/661	(71)**Name of Applicant :** **1)Mylan Laboratories Ltd.** Address of Applicant :Unit-11, 1A/2, M.I.D.C. Industrial Estate, Taloja, Panvel, Dist. Raigad, Maharashtra-410208, India Maharashtra India
(31) Priority Document No	:NA	
(32) Priority Date	:NA	
(33) Name of priority country	:NA	(72)**Name of Inventor :**
(86) International Application No	:NA	**1)VELLANKI, Siva Ram Prasad**
Filing Date	:NA	**2)BALUSU, Raja Babu**
(87) International Publication No	: NA	**3)PUTTA, Subba Rayudu**
(61) Patent of Addition to Application Number	:NA	**4)RAAVI, Mastan Rao**
Filing Date	:NA	**5)ARIKATLA, Sivalakshmi Devi**
(62) Divisional to Application Number	:NA	
Filing Date	:NA	

(57) Abstract :
The present disclosure provides process for the purification of 9-{(R)-2-[((R,S)-{[(S)-l-(isopropoxycarbonyl)ethyl]amino} phenoxyphosphinyl) methoxy] propyl}adenine using acids to give enantiomerically pure tenofovir alafenamide.

No. of Pages : 19 No. of Claims : 10

(12) PATENT APPLICATION PUBLICATION
(21) Application No.120/MUM/2014 A
(19) INDIA
(22) Date of filing of Application :14/01/2014
(43) Publication Date : 28/08/2015

(54) Title of the invention : A METHOD OF MANUFACTURING ALUMINIUM TUBES FOR TELESCOPIC MAST

(51) International classification	:C22F 1/04, B21C37/15
(31) Priority Document No	:NA
(32) Priority Date	:NA
(33) Name of priority country	:NA
(86) International Application No	:NA
Filing Date	:NA
(87) International Publication No	: NA
(61) Patent of Addition to Application Number	:NA
Filing Date	:NA
(62) Divisional to Application Number	:NA
Filing Date	:NA

(71)**Name of Applicant :**
1)Siddhi Engineers
Address of Applicant :Siddhi House • 6, Virkunj Society, Near Vidyanagar School, Usmanpura, Ahmedabad 380 014 Gujarat, India. Gujarat India
(72)**Name of Inventor :**
1)Patel Bhagwat Ramanbhai
2)Gandhi Prashant Ramniklal

(57) Abstract :
A METHOD OF MANUFACTURING ALUMINIUM TUBES FOR TELESCOPIC MAST The present invention relates to a method of manufacturing aluminium tubes for telescopic mast in which primarily billets, formed from an aluminium alloy, are subjected to a porthole extrusion process. Following porthole extrusion, the aluminium tubes are further cold drawn for reducing the cross sectional area of the tube, to increases tensile strength, to achieve H11 tolerance, to improve percentage elongation and to achieve better grains orientation. Successively, the tubes are then straightened on straightening machine to achieve straightness and to relieve the stress generated during cold drawing process. Subsequently, the artificial age hardening is carried out at about 165 centigrade with a view to achieve the required mechanical properties and dimensional tolerance in resultant products (aluminium tubes) for telescopic mast.

No. of Pages : 15 No. of Claims : 6

(12) PATENT APPLICATION PUBLICATION
(19) INDIA
(22) Date of filing of Application :21/01/2014
(21) Application No.193/MUM/2014 A
(43) Publication Date : 28/08/2015

(54) Title of the invention : PHARMACEUTICAL COMPOSITION COMPRISING ANTIBACTERIAL AGENTS

(51) International classification	:A61K31/00, A61K9/00
(31) Priority Document No	:NA
(32) Priority Date	:NA
(33) Name of priority country	:NA
(86) International Application No	:NA
Filing Date	:NA
(87) International Publication No	: NA
(61) Patent of Addition to Application Number	:NA
Filing Date	:NA
(62) Divisional to Application Number	:NA
Filing Date	:NA

(71)**Name of Applicant :**
1)WOCKHARDT LIMITED
Address of Applicant :D-4, MIDC Area, Chikalthana, Aurangabad Maharashtra India
(72)**Name of Inventor :**
1)Patel,Mahesh Vithalbhai
2)Bhagwat,Sachin
3)Satav,Jaykumar Satwaji
4)Khande, Hemant Narendra
5)Joshi, Prashant Ratnakar
6)Palwe, Snehal Rameshwar

(57) Abstract :
A pharmaceutical compositions comprising: (a) a carbapenem antibacterial agent selected from imipenem, meropenem, ertapenem, doripenem or a pharmaceutically acceptable derivative thereof, and (b) a compound of Formula (I), or a stereoisomer or a pharmaceutical acceptable derivative thereof, are disclosed.

No. of Pages : 30 No. of Claims : 13

(12) PATENT APPLICATION PUBLICATION
(21) Application No.213/MUM/2014 A
(19) INDIA
(22) Date of filing of Application :21/01/2014
(43) Publication Date : 28/08/2015

(54) Title of the invention : A METHOD FOR REPLACING SLEW BEARING OF LADLE TURRET WITHOUT REMOVAL OF ITS ARM ASSEMBLY AND SHIFTING OF TURRET TABLE.

(51) International classification	:B01J 8/24	(71)**Name of Applicant :**
(31) Priority Document No	:NA	**1)JSW STEEL LIMITED**
(32) Priority Date	:NA	Address of Applicant :Dolvi Works, Geetapuram, Dolvi, Taluka Pen, Dist. Raigad, Maharashtra, PIN 402107, India; Having the Registered Office at JSW CENTRE, BANDRA KURLA COMPLEX, BANDRA(EAST), MUMBAI-400051, STATE OF MAHARASHTRA,INDIA Maharashtra India
(33) Name of priority country	:NA	
(86) International Application No	:NA	
Filing Date	:NA	
(87) International Publication No	: NA	(72)**Name of Inventor :**
(61) Patent of Addition to Application Number	:NA	**1)SINGH, Binod Kumar**
Filing Date	:NA	**2)SAPPA, Prakash**
(62) Divisional to Application Number	:NA	**3)SATYA PRAKASH**
Filing Date	:NA	**4)POLAMARASETTI, Balaraju**

(57) Abstract :
TITLE: A METHOD FOR REPLACING SLEW BEARING OF LADLE TURRET WITHOUT REMOVAL OF ITS ARM ASSEMBLY AND SHIFTING OF TURRET TABLE. The present invention relates to a method for replacement of slew bearing of ladle turret used in steel plants in a safe and faster and simplified step by step procedure with less man hours, without usage of external cranes and without undertaking major dismantling of arm assembly/turret top structure. The method favour easy replacement of worn out slew bearing of ladle turret with new one involving temporary structures to support the ladle turret structure, hydraulic jacks for lifting the top structure for creating required gap for bearing replacement, fixing of tie rod for stability, roller assembly to pull or push the bearing from and to the original position, hydraulic jacks for lifting/lowing bearing, and locating rods for precise positioning and matching of holes of bearing with flanges on structure, reducing downtime and manpower involvement thus favouring cost effective maintenance of this vital equipment in steel plants.

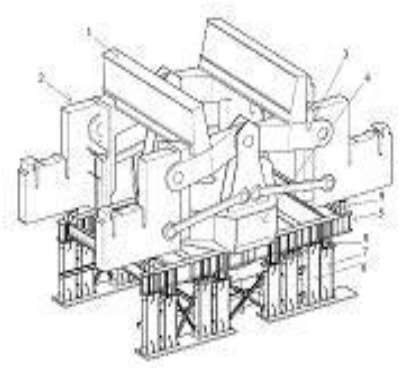

Figure 1

No. of Pages : 20 No. of Claims : 7

(12) PATENT APPLICATION PUBLICATION
(19) INDIA
(22) Date of filing of Application :28/10/2014
(21) Application No.2162/MUMNP/2014 A
(43) Publication Date : 28/08/2015

(54) Title of the invention : AIR COOLED CONDENSER FAN DECK SUBASSEMBLY

(51) International classification :F28F9/00
(31) Priority Document No :61/638,853
(32) Priority Date :26/04/2012
(33) Name of priority country :U.S.A.
(86) International Application No :PCT/US2013/038471
Filing Date :26/04/2013
(87) International Publication No :WO 2013/163586
(61) Patent of Addition to Application Number :NA
Filing Date :NA
(62) Divisional to Application Number :NA
Filing Date :NA

(71)**Name of Applicant :**
1)EVAPCO INC.
Address of Applicant :5151 Allendale Lane Taneytown MD 21787 U.S.A.
(72)**Name of Inventor :**
1)EINDHOVEN Jeftha

(57) Abstract :
An air cooled condenser fan deck subassembly system and method including eight subassembly parts which are pre assembled prior to arrival at the final assembly location. The eight subassembly parts include four inner subassembly parts and four outer subassembly parts each of which are sized to fit in a standard sea container. Once the eight fan deck subassembly parts are delivered to the site they are unloaded and bolded together resulting in significant time and cost savings to the purchaser and erector.

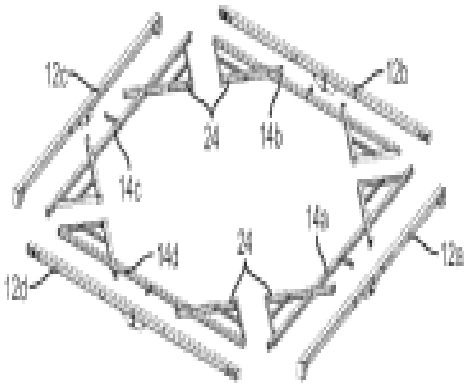

FIG. 4A

No. of Pages : 17 No. of Claims : 16

(12) PATENT APPLICATION PUBLICATION
(19) INDIA
(22) Date of filing of Application :20/01/2014

(21) Application No.3985/MUM/2013 A
(43) Publication Date : 28/08/2015

(54) Title of the invention : ELEVATOR

(51) International classification	:B66B 1/00, B66B 9/00	(71)**Name of Applicant :** **1)HYDRO-PNEUMATIC TECHNIKS** Address of Applicant :WARE HOUSE NO.4, ROAD NO.6, TV COMPOUND ROAD, FUNCTIONAL ESTATE, UDYOGNAGAR, UDHNA, SURAT - 394210, GUJARAT, INDIA Gujarat India
(31) Priority Document No	:NA	
(32) Priority Date	:NA	(72)**Name of Inventor :**
(33) Name of priority country	:NA	**1)TRIVEDI, PANKAJ K. MAHIPATRAY**
(86) International Application No	:NA	
Filing Date	:NA	
(87) International Publication No	: NA	
(61) Patent of Addition to Application Number	:NA	
Filing Date	:NA	
(62) Divisional to Application Number	:NA	
Filing Date	:NA	

(57) Abstract :
The present subject matter provides foldable elevator and method thereof. The foldable elevator is foldable in nature. The foldable elevator comprises interlocking platforms to form chamber to carry objects. The elevator comprises a guide rail and a support frame, the support frame is displaceable along the guide rail. A drive configured to displace the support frame along the guide rail. A right platform, a left platform and a bottom platform each of the right platform, left platform and bottom platform being pivotably coupled to the support frame, wherein: the left platform and the right platform are configured to interlock with the bottom platform to form a chamber, and the left platform, right platform and the bottom platform are configured to retract to substantially align with the support frame. A sensor is configured to disengage the drive and the support frame based on detection of a hazard. (FIG. 1) ProdyoVidhi Ref. CIHP.0010.IN| 3985/MUM/2013

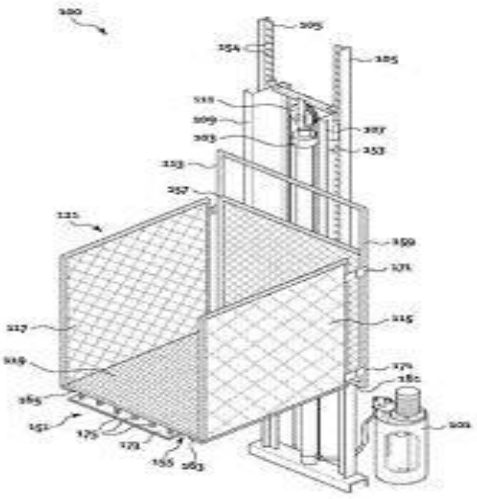

FIG. 1

No. of Pages : 24 No. of Claims : 10

(12) PATENT APPLICATION PUBLICATION
(21) Application No.184/MUM/2014 A
(19) INDIA
(22) Date of filing of Application :21/01/2014
(43) Publication Date : 28/08/2015

(54) Title of the invention : PROCESS OF PREPARING A PHARMACEUTICAL COMPOSITIONS COMPRISING FIXED DOSE COMBINATION OF METFORMIN AND LINAGLIPTIN OR SALTS THEREOF

(51) International classification	:A61K31/155, A61K9/20
(31) Priority Document No	:NA
(32) Priority Date	:NA
(33) Name of priority country	:NA
(86) International Application No	:NA
Filing Date	:NA
(87) International Publication No	: NA
(61) Patent of Addition to Application Number	:NA
Filing Date	:NA
(62) Divisional to Application Number	:NA
Filing Date	:NA

(71)**Name of Applicant :**
1)WOCKHARDT LIMITED
Address of Applicant :D-4, MIDC Area, Chikalthana, Aurangabad Maharashtra India
(72)**Name of Inventor :**
1)Naidu, Venkataramana
2)Wagh, Balasaheb Parshuram
3)Krishna Mohan L.
4)Jain, Girish Kumar

(57) Abstract :
The present invention relates to solid oral pharmaceutical composition comprising metformin and linagliptin or salt thereof. In particular, the present invention relates to solid oral stable pharmaceutical composition comprising fixed dose combination of metformin and linagliptin or salt thereof. By using an alkalizer, it is possible to achieve the stable pharmaceutical composition of metformin and linagliptin. The invention further relates to use of such composition in the treatment of diabetes mellitus. A method for the preparation of such composition is also described.

No. of Pages : 22 No. of Claims : 8

(12) PATENT APPLICATION PUBLICATION
(21) Application No.214/MUM/2014 A
(19) INDIA
(22) Date of filing of Application :21/01/2014
(43) Publication Date : 28/08/2015

(54) Title of the invention : HORIZONTAL DUAL AXIS SOLAR TRACKER (HDSAT)

(51) International classification	:F24J2/10, F24J2/54	(71)**Name of Applicant :** **1)NIKHIL N. MHATRE** Address of Applicant :C/1, 302, SWAPNAPURTI APT., PIMPRIPADA ROAD, MALAD (E), MUMBAI-97 Maharashtra India
(31) Priority Document No	:NA	
(32) Priority Date	:NA	
(33) Name of priority country	:NA	(72)**Name of Inventor :** **1)NIKHIL N. MHATRE**
(86) International Application No	:NA	
Filing Date	:NA	
(87) International Publication No	: NA	
(61) Patent of Addition to Application Number	:NA	
Filing Date	:NA	
(62) Divisional to Application Number	:NA	
Filing Date	:NA	

(57) Abstract :
This device aims at using the principal of hydraulic lift to rotate the solar panel according to the sun so as to reduce the misalignment between the direct beam of light(i.e. light which contains 90% of the energy) and the solar panel. Two pipes having different diameters and different lengths are used for creating the desired motion. The pipe with smaller diameter and greater length is connected to a tank whfch is connected to a central tank by means of two flexible pipes one of them is connected with an electronic valve used regulating oil and the other is connected to a pump which pumps the oil from the tank to the central tank. Note that since the pump is being many would assume that it consumes to much of electricity but this cant be true because the pump Works only for a small interval of time hence the pump would consume very less amount of electricity. Similarly in the case of an electronic valve, current would be required only to switch on the vafve after that the valve would supply oil in a continuios way and this will be continued till a small current is supplied to the valve so as to switch it off. This device can be easily converted into a single axis tracker. Hence we can achieve similar results through this device at an expense of less electric current.

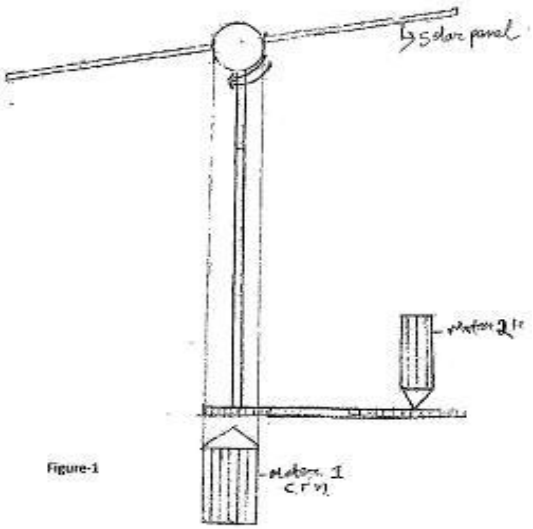

Figure-1

No. of Pages : 10 No. of Claims : 6

(12) PATENT APPLICATION PUBLICATION
(19) INDIA
(22) Date of filing of Application :20/01/2014

(21) Application No.173/MUM/2014 A
(43) Publication Date : 28/08/2015

(54) Title of the invention : IDENTIFICATION, QUANTIFICATION, MONITORING AND ANALYSIS OF INTRA-TUMOR HETEROGENEITY.

(51) International classification	:C12Q1/24, G01N33/53, G01N1/30	(71)**Name of Applicant :** **1)NATIONAL CENTRE FOR CELL SCIENCE** Address of Applicant :NCCS COMPLEX, PUNE UNIVERSITY CAMPUS, GANESHKHIND, PUNE-411 007, MAHARASHTRA, INDIA. Maharashtra India
(31) Priority Document No	:NA	
(32) Priority Date	:NA	
(33) Name of priority country	:NA	(72)**Name of Inventor :** **1)SHARMILA A. BAPAT** **2)RUTIKA R. NAIK**
(86) International Application No	:NA	
Filing Date	:NA	
(87) International Publication No	: NA	
(61) Patent of Addition to Application Number	:NA	
Filing Date	:NA	
(62) Divisional to Application Number	:NA	
Filing Date	:NA	

(57) Abstract :
The present invention provides a method for concurrent resolution of the cancer stem cell (CSC) derived hierarchy, genetic instability, differentially cycling cells and host cells recruited for performing tumor growth supporting functions; and (ii) quantification, monitoring and analysis of these populations. The first level of analysis can be carried out using either CSC- and progenitor-specific markers or a marker-free approach based on label-chase to resolve the tumor regenerative hierarchy. The next level involves combinatorial quantification of differential DNA-RNA contents to identify recruited host and tumor cell variants resulted from genetic instability and differential cycling within the tumor.

Figure 1 *Stem cell hierarchy*

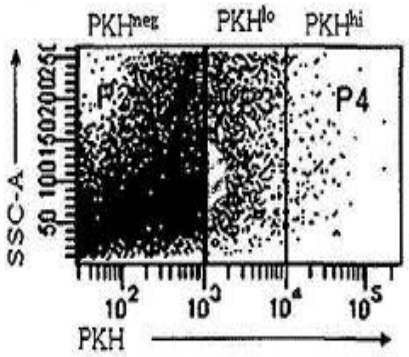

No. of Pages : 33 No. of Claims : 7

(12) PATENT APPLICATION PUBLICATION
(19) INDIA
(22) Date of filing of Application :18/12/2013

(21) Application No.3963/MUM/2013 A
(43) Publication Date : 28/08/2015

(54) Title of the invention : ENHANCED PISTON CYLINDER TURBOSHAFT ENGINE

(51) International classification	:F02C 6/12, F02B33/00
(31) Priority Document No	:NA
(32) Priority Date	:NA
(33) Name of priority country	:NA
(86) International Application No	:NA
Filing Date	:NA
(87) International Publication No	: NA
(61) Patent of Addition to Application Number	:NA
Filing Date	:NA
(62) Divisional to Application Number	:NA
Filing Date	:NA

(71)**Name of Applicant :**
1)DHIRENDRA VIKASH SHARMA
Address of Applicant :FLAT NO. 802/BLOCK A1, PRISM SOCIETY, AUNDH, PUNE 411007, MAHARASHTRA, INDIA Maharashtra India
(72)**Name of Inventor :**
1)DHIRENDRA VIKASH SHARMA

(57) Abstract :
The present invention discloses an engine with twin power source to generate high output power. The functioning of the engine comprises combusting the fuel and air mixture in the primary combustion chamber. The combustion of the mixture generates a volume of exhaust gases. The exhaust gases are passed on the primary exhaust line onto the turbine. The method further comprises generating the secondary power through the turbine. The method further comprises generating the tertiary power through the turbine. The tertiary power generation comprises the steps of combusting compressed air fuel mixture and transferring the exhaust to the compressor assembly.

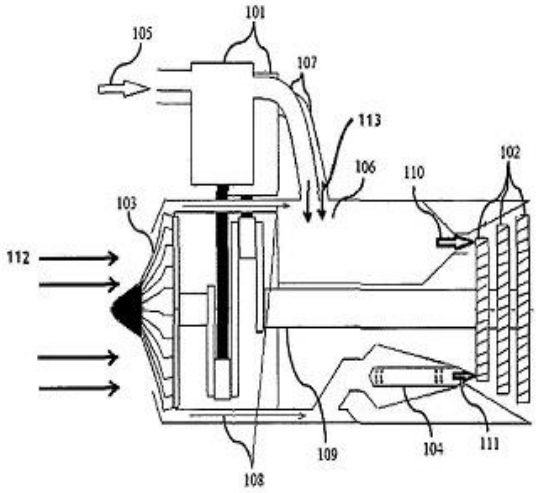

FIG. 1

No. of Pages : 22 No. of Claims : 6

(12) PATENT APPLICATION PUBLICATION
(19) INDIA
(22) Date of filing of Application :22/01/2014

(21) Application No.215/MUM/2014 A
(43) Publication Date : 28/08/2015

(54) Title of the invention : MUCOADHESIVE TABLET OF PREGABALIN.

(51) International classification	:A61K9/00, A61K9/20, A61K31/197	(71)**Name of Applicant :** **1)Intas Pharmaceuticals Ltd.** Address of Applicant :Intas Pharmaceuticals Ltd. 2nd Floor, Chinubhai Centre, Ashram Road, Ahmedabad 380009 Gujarat India
(31) Priority Document No	:NA	
(32) Priority Date	:NA	(72)**Name of Inventor :**
(33) Name of priority country	:NA	**1)Ashish Sehgal**
(86) International Application No	:NA	**2)Umesh Setty**
Filing Date	:NA	**3)Nilesh Patel**
(87) International Publication No	: NA	
(61) Patent of Addition to Application Number	:NA	
Filing Date	:NA	
(62) Divisional to Application Number	:NA	
Filing Date	:NA	

(57) Abstract :
The present invention relates to a mucoadhesive tablet comprising pregabalin with at least one mucoadhesive excipient, at least one swelling agent and at least one gelling agent, wherein the mucoadhesive tablet maintains gastric retention for the time period during which the drug is released into the stomach. Further it relates to a process for the preparation of the mucoadhesive tablet.

ABSTRACT

The present invention relates to a mucoadhesive tablet comprising pregabalin with at least one mucoadhesive excipient, at least one swelling agent and at least one gelling agent, wherein the mucoadhesive tablet maintains gastric retention for the time period during which the drug is released into the stomach. Further it relates to a process for the preparation of the mucoadhesive tablet.

No. of Pages : 12 No. of Claims : 10

(12) PATENT APPLICATION PUBLICATION
(19) INDIA
(22) Date of filing of Application :13/01/2014

(21) Application No.113/MUM/2014 A
(43) Publication Date : 28/08/2015

(54) Title of the invention : COGITATE OPERATED INTELLIGENT SYSTEM

(51) International classification	:G06F 7/00, G06F 3/00	(71)**Name of Applicant :** **1)ABHIJEET R. SATANI** Address of Applicant :A/61 VIKRAM PARK SOCIETY, OPP. BAJARANGDAS ASHRAM, THAKKARBAPANAGAR ROAD, AHMEDABAD-382350, GUJARAT, INDIA. Gujarat India
(31) Priority Document No	:NA	
(32) Priority Date	:NA	(72)**Name of Inventor :**
(33) Name of priority country	:NA	**1)ABHIJEET R. SATANI**
(86) International Application No	:NA	
Filing Date	:NA	
(87) International Publication No	: NA	
(61) Patent of Addition to Application Number	:NA	
Filing Date	:NA	
(62) Divisional to Application Number	:NA	
Filing Date	:NA	

(57) Abstract :
COGNITIVELY OPERATED SYSTEM The present subject matter provides: a server and a method thereof; a communication device and a method thereof; and a controlled device and a method thereof. The present subject matter provides capturing of modification caused by the neural signals on a first signal. The present subject matter provides generation and broadcasting of the first signal which interacts with the neural signal. The neural signals correspond to instructions to operate a controlled device. The interaction between the first signal and neural signal causes modification of some characteristics of the first signal, resulting in a second signal. The second signal is than captured and analyzed for generating a command corresponding to the second signal. The command is reflective of the instructions to operate the controlled device and the subject matter provides causing the controlled device to operate according to the command. FIG. 3 ProdyoVidhi Ref. No.: CIAB.0010.IN

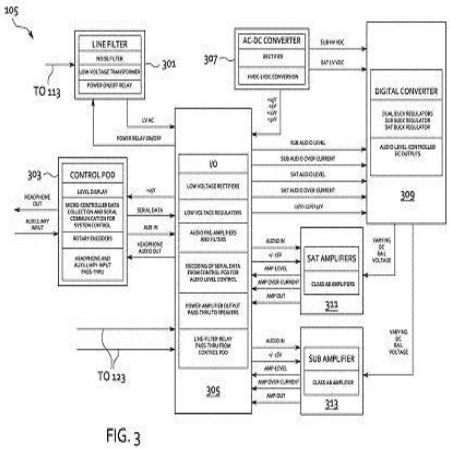

FIG. 3

No. of Pages : 32 No. of Claims : 15

(12) PATENT APPLICATION PUBLICATION
(21) Application No.194/MUM/2014 A
(19) INDIA
(22) Date of filing of Application :21/01/2014
(43) Publication Date : 28/08/2015

(54) Title of the invention : A PROCESS FOR PREPARATION OF (2S, 5R)-7-OXO-N-[(3S)-PYRROLIDIN-3-YLOXY]-6-(SULFOOXY)-1,6-DIAZABICYCLO[3.2.1]OCTANE-2-CARBOXAMIDE

(51) International classification	:A61k31	(71)**Name of Applicant :**
(31) Priority Document No	:NA	**1)WOCKHARDT LIMITED**
(32) Priority Date	:NA	Address of Applicant :D-4, MIDC Area, Chikalthana, Aurangabad Maharashtra India
(33) Name of priority country	:NA	
(86) International Application No	:NA	(72)**Name of Inventor :**
Filing Date	:NA	**1)Tadiparthi, Ravikumar**
(87) International Publication No	: NA	**2)Birajdar, Satish**
(61) Patent of Addition to Application Number	:NA	**3)Dond, Bharat**
Filing Date	:NA	**4)Patil, Vijaykumar Jagdishwar**
(62) Divisional to Application Number	:NA	**5)Patel,Mahesh Vithalbhai**
Filing Date	:NA	

(57) Abstract :
A process for preparation of a compound of Formula (I) is disclosed.

No. of Pages : 30 No. of Claims : 16

(12) PATENT APPLICATION PUBLICATION
(19) INDIA
(22) Date of filing of Application :10/01/2014

(21) Application No.87/MUM/2014 A
(43) Publication Date : 28/08/2015

(54) Title of the invention : METHOD AND SYSTEM FOR EFFICIENT ATTRIBUTES MANAGEMENT OF PRODUCT DESIGNS

(51) International classification	:G06Q10/06, G06Q30/02
(31) Priority Document No	:NA
(32) Priority Date	:NA
(33) Name of priority country	:NA
(86) International Application No	:NA
Filing Date	:NA
(87) International Publication No	: NA
(61) Patent of Addition to Application Number	:NA
Filing Date	:NA
(62) Divisional to Application Number	:NA
Filing Date	:NA

(71)**Name of Applicant :**
1)TATA TECHNOLOGIES PTE LIMITED
Address of Applicant :8 SHENTON WAY, #19-05 AXA TOWER, SINGAPORE 068811 Maharashtra India
(72)**Name of Inventor :**
1)MR. VISHESH GOEL
2)MR. VISHAL GADE
3)HARISH SHEWALE
4)MR.VINAYAK GAPCHUP

(57) Abstract :
A system and method for Efficient Attributes Management of Product Designs, whereby hierarchy levels are assigned to assembly stages of the product at production line, revision is incorporated in all hierarchy levels up to product level for any engineering change, attributes of parts and assemblies of products under design are transacted with product life cycle management at collective level and not constrained to transact at part level. Also, the system makes it possible to incorporate multi-hierarchy engineering change revisions en mass, as per organizational requirement and practice. The system modularizes attributes transaction action so as to reduce time of usage of PLM tool as well as person for higher value added work.

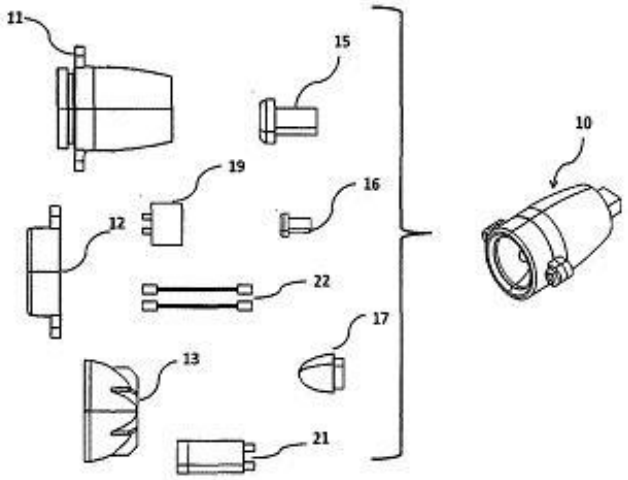

Figure-1

No. of Pages : 50 No. of Claims : 11

(12) PATENT APPLICATION PUBLICATION
(21) Application No.4013/MUM/2014 A
(19) INDIA
(22) Date of filing of Application :15/12/2014
(43) Publication Date : 28/08/2015

(54) Title of the invention : A LECITHIN OR LECITHIN PREPARATION HAVING RESISTANCE TO HEAT DISCOLORATION AND A METHOD FOR PRODUCING THE SAME

(51) International classification	:C07F9/10, B01F17/00, A23L1/211
(31) Priority Document No	:2013-272380
(32) Priority Date	:27/12/2013
(33) Name of priority country	:Japan
(86) International Application No	:PCT//
Filing Date	:01/01/1900
(87) International Publication No	: NA
(61) Patent of Addition to Application Number	:NA
Filing Date	:NA
(62) Divisional to Application Number	:NA
Filing Date	:NA

(71)**Name of Applicant :**
1)TSUJI OIL MILLS CO., LTD.
Address of Applicant :565-1, Ureshino-Niwanosho-cho, Matsusaka-shi, Mie 515-2314 JAPAN Japan
(72)**Name of Inventor :**
1)FUJIMOTO, Yuki
2)HAYASHI, Akihito
3)HAMAGUCHI, Nobutoshi

(57) Abstract :
[PROBLEM] To provide a lecithin or lecithin preparation of which resistance to heat discoloration is achieved without significant change of the phospholipid composition of the lecithin nor of the oligosaccharide content; and a method for producing the same. [SOLUTION] A lecithin or lecithin preparation obtained by bringing a lecithin into contact with an adsorbent and removing the adsorbent, the lecithin or lecithin preparation having resistance to heat discoloration and having an oligosaccharide content being 50% by mass or more of the content before the contact with the adsorbent.

No. of Pages : 48 No. of Claims : 18

(12) PATENT APPLICATION PUBLICATION
(21) Application No.75/MUM/2014 A
(19) INDIA
(22) Date of filing of Application :09/01/2014
(43) Publication Date : 28/08/2015

(54) Title of the invention : SYNTHESIS OF FLAVONES (2-ARYL-4H-CHROMEN-4-ONE) BY CYCLOCONDENSATION OF O-HYDROXYPHENYL ARYL-1, 3-PROPANEDIONES USING SILICA SULPHURIC ACID, AN EFFICIENT REUSABLE HETEROGENEOUS ACIDIC MEDIA.

(51) International classification :C07D311/30,A61K31/7016,A61K31/352
(31) Priority Document No :NA
(32) Priority Date :NA
(33) Name of priority country :NA
(86) International Application No :NA
Filing Date :NA
(87) International Publication No : NA
(61) Patent of Addition to Application Number :NA
Filing Date :NA
(62) Divisional to Application Number :NA
Filing Date :NA

(71)**Name of Applicant :**
1)DR. M. M. V. RAMANA
Address of Applicant :DEPARTMENT OF CHEMISTRY, UNIVERSITY OF MUMBAI, VIDYANAGARI, SANTACRUZ (EAST), MUMBAI-400 098, INDIA. Maharashtra India
(72)**Name of Inventor :**
1)DR. M. M. V. RAMANA
2)NIMKAR AMEY PRAMOD
3)BETKAR RAHUL RAMESH
4)RANADE PRASANNA BHALCHANDRA

(57) Abstract :
The present invention relates to the synthesis of flavones (2-aryl-4H-chromen-4-one) by cyclocondensation of o-hydroxyphenyl aryl-1, 3-propanediones using silica sulphuric acid. The main object of the present invention is to synthesize flavones via a green procedure, in good yields and at room temperature by using heterogeneous reusable acidic media, silica sulphuric acid.

No. of Pages : 9 No. of Claims : 10

(12) PATENT APPLICATION PUBLICATION
(19) INDIA
(22) Date of filing of Application :10/01/2014

(21) Application No.94/MUM/2014 A
(43) Publication Date : 28/08/2015

(54) Title of the invention : TOOL DEPLOYMENT SYSTEM

(51) International classification	:B63B35/44, B63B35/00, B63B17/00
(31) Priority Document No	:NA
(32) Priority Date	:NA
(33) Name of priority country	:NA
(86) International Application No	:NA
Filing Date	:NA
(87) International Publication No	: NA
(61) Patent of Addition to Application Number	:NA
Filing Date	:NA
(62) Divisional to Application Number	:NA
Filing Date	:NA

(71)**Name of Applicant :**
1)RELIANCE INDUSTRIES LIMITED
Address of Applicant :3RD FLOOR, MAKER CHAMBER-IV 222, NARIMAN POINT, MUMBAI 400021, MAHARASHTRA, INDIA. Maharashtra India
(72)**Name of Inventor :**
1)KUNKUNLAGUNTA CHANDRA SEKHAR
2)PUTHANKOVILAKAM JAYAKRISHNAN
3)RAO NADAKUDITI DEVENDRA
4)TAMINA ANILKANTH

(57) Abstract :
A tool deployment system is disclosed. The tool deployment system is installable underwater for facilitating deployment of tools thereon. The tool deployment system includes a foldable base, a platform and a tool holding structure. The foldable base has a plurality of openings configured thereon. The openings reduce buoyant force to which the foldable base is subjected to. The platform is disposed operatively above the foldable base and spaced apart from the foldable base by means of at least one support element. The tool holding structure is disposed on the platform for facilitating deployment of at least one tool thereon.

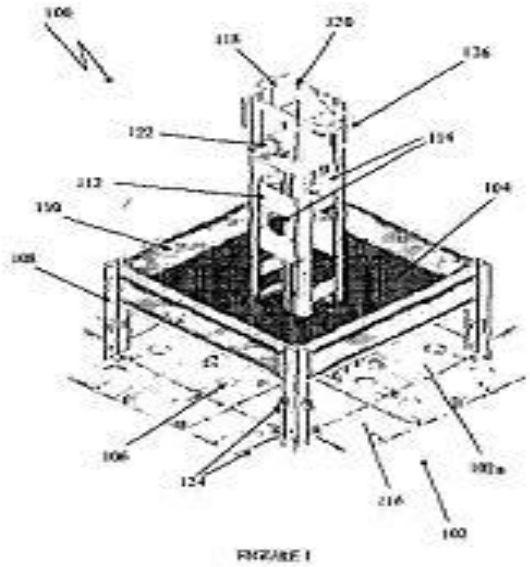

FIGURE 1

No. of Pages : 20 No. of Claims : 11

(12) PATENT APPLICATION PUBLICATION
(19) INDIA
(22) Date of filing of Application :28/10/2014

(21) Application No.2151/MUMNP/2014 A
(43) Publication Date : 28/08/2015

(54) Title of the invention : DIGITAL IMAGE PROCESSING APPARATUS AND CONTROLLING METHOD THEREOF

(51) International classification :H04N5/225,H04N5/232,G06F3/01
(31) Priority Document No :10-2012-0034091
(32) Priority Date :02/04/2012
(33) Name of priority country :Republic of Korea
(86) International Application No :PCT/KR2013/002570
Filing Date :28/03/2013
(87) International Publication No :WO 2013/151273
(61) Patent of Addition to Application Number :NA
Filing Date :NA
(62) Divisional to Application Number :NA
Filing Date :NA

(71)**Name of Applicant :**
1)SAMSUNG ELECTRONICS CO. LTD.
Address of Applicant :129 Samsung ro Yeongtong gu Suwon si Gyeonggi do 443 742 Republic of Korea
(72)**Name of Inventor :**
1)JANG In ra

(57) Abstract :
A digital image processing apparatus and a controlling method thereof are provided. The digital image processing apparatus displaying first content and second content generated with respect to the first content includes: a sensing unit that senses a movement of the digital image processing apparatus; a movement detecting unit that determines a movement of the digital image processing apparatus based on a sensed signal from the sensing unit; and a display control unit that controls display of the first and second contents wherein the display control unit controls a single reproduction of the first content or a simultaneous reproduction of the first and second contents based on the determination of the movement detecting unit. A user may easily and intuitively manage various contents by using the digital image processing apparatus.

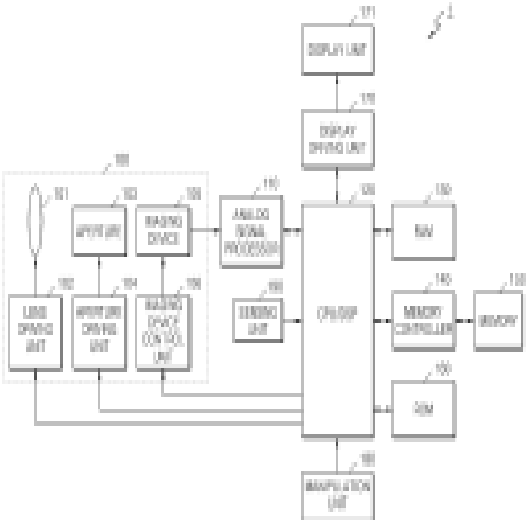

No. of Pages : 32 No. of Claims : 15

(12) PATENT APPLICATION PUBLICATION
(19) INDIA
(22) Date of filing of Application :28/10/2014
(21) Application No.2152/MUMNP/2014 A
(43) Publication Date : 28/08/2015

(54) Title of the invention : SYSTEMS AND METHODS FOR ESTABLISHING A GROUP COMMUNICATION BASED ON MOTION OF A MOBILE DEVICE AND ON VOICE COMMAND

(51) International classification :G06F1/16,H04M1/72,H04M1/725
(31) Priority Document No :13/479,255
(32) Priority Date :23/05/2012
(33) Name of priority country :U.S.A.
(86) International Application No :PCT/US2013/041775
Filing Date :20/05/2013
(87) International Publication No :WO 2013/177020
(61) Patent of Addition to Application Number :NA
Filing Date :NA
(62) Divisional to Application Number:NA
Filing Date :NA

(71)**Name of Applicant :**
1)QUALCOMM INCORPORATED
Address of Applicant :Attn: International IP Administration 5775 Morehouse Drive San Diego California 92121 U.S.A.
(72)**Name of Inventor :**
1)SUBBARAMOO Shobha M.
2)LINDNER Mark A..

(57) Abstract :
Methods and systems of communication using a mobile device include detecting the voice of a user of the mobile device and sending a request to a server for control of the floor in a group communication in response to the detected voice. Further methods of controlling floor access for a plurality of mobile devices include receiving voice commands of a user from the plurality of mobile devices scheduling floor access for the mobile devices in response to the received voice commands and sending messages to the mobile devices indicating the status of floor control in a group communication session. Further methods of group communication include detecting a motion of a mobile device corresponding to a user action in response to the detected motion initiating a half duplex group communication application and displaying visual feedback associated with the half duplex group communication application on a display screen of the mobile device.

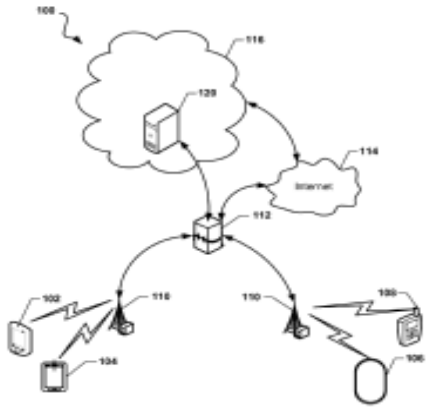

FIG. 1

No. of Pages : 89 No. of Claims : 48

(12) PATENT APPLICATION PUBLICATION
(19) INDIA
(22) Date of filing of Application :28/10/2014
(21) Application No.2153/MUMNP/2014 A
(43) Publication Date : 28/08/2015

(54) Title of the invention : A SMART PACKAGE AND MONITORING SYSTEM WITH INDICATOR AND METHOD OF MAKING SAME

(51) International classification :B65D75/36,A61J7/04,B65D83/04
(31) Priority Document No :2,775,546
(32) Priority Date :25/04/2012
(33) Name of priority country :Canada
(86) International Application No :PCT/CA2013/000406
Filing Date :25/04/2013
(87) International Publication No :WO 2013/159198
(61) Patent of Addition to Application Number :NA
Filing Date :NA
(62) Divisional to Application Number :NA
Filing Date :NA

(71)**Name of Applicant :**
1)INTELLIGENT DEVICES INC.
Address of Applicant :The Grove 21 Pine Street Belleville St. Michael Barbados
(72)**Name of Inventor :**
1)WILSON Allan
2)PETERSEN Michael
3)BROTZEL Dean

(57) Abstract :
There is provided a smart package and monitoring system having a status indicator and a method of making the same. The smart package includes an electronic sensor monitoring tag having re usable electronic circuitry and power source along with a conductive grid printed on a thin flexible substrate and connected to the tag so the tag and grid are in electrical continuity to form a monitoring device. The conductive grid is aligned with an opening of the smart package. The smart package can also include an optical ink indicator configured to display the status of the package. A multiplexer can be used to connect the tag to the conductive grid. The conductive grid can include capacitive sensors formed on a thin plastic layer and positioned so as to form a capacitive element with the conductive side of the blister.

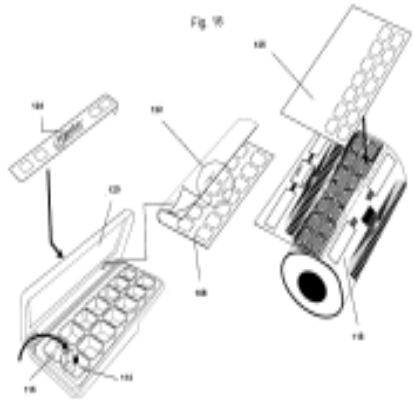

No. of Pages : 69 No. of Claims : 42

(12) PATENT APPLICATION PUBLICATION
(21) Application No.101/MUM/2014 A
(19) INDIA
(22) Date of filing of Application :13/01/2014
(43) Publication Date : 28/08/2015

(54) Title of the invention : A SYSTEM WITH INPUT CONTROLLED CLC FILTER BASED BUCK CONVERTER FOR SOLAR POWER APPLICATIONS.

(51) International classification	:G05F1/10, H02M3/158, H02M1/14	(71)**Name of Applicant :** **1)CROMPTON GREAVES LIMITED** Address of Applicant :CROMPTON GREAVES LIMITED, CG HOUSE, DR. ANNIE BESANT ROAD, WORLI, MUMBAI - 400030, MAHARASHTRA, INDIA Maharashtra India
(31) Priority Document No	:NA	
(32) Priority Date	:NA	
(33) Name of priority country	:NA	(72)**Name of Inventor :** **1)WACHASUNDAR SHRIPAD** **2)SHARMA SHIVKANT**
(86) International Application No	:NA	
Filing Date	:NA	
(87) International Publication No	: NA	
(61) Patent of Addition to Application Number	:NA	
Filing Date	:NA	
(62) Divisional to Application Number	:NA	
Filing Date	:NA	

(57) Abstract :
A system with input controlled CLC filter based buck converter for solar power applications, said system comprising: at least a buck converter adapted to be coupled with a power source in order to transfers packets of energy; at least a CLC filter adapted to receive input voltage and input current from said power source and to provide output voltage and output current to said buck converter; and at least a controller adapted to work in at least three states of operation for controlling said system in order to enable said system to achieve higher tracking efficiency for maximum power point tracking.

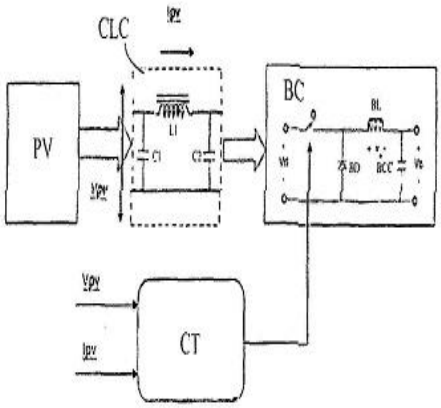

Figure 1

No. of Pages : 18 No. of Claims : 8

(12) PATENT APPLICATION PUBLICATION
(19) INDIA
(22) Date of filing of Application :29/10/2014
(21) Application No.2170/MUMNP/2014 A
(43) Publication Date : 28/08/2015

(54) Title of the invention : GEOFENCE BREACH CONFIDENCE

(51) International classification :H04W4/02,G01S19/34,G01S13/58
(31) Priority Document No :61/640,722
(32) Priority Date :01/05/2012
(33) Name of priority country :U.S.A.
(86) International Application No :PCT/US2013/038901
Filing Date :30/04/2013
(87) International Publication No :WO 2013/166033
(61) Patent of Addition to Application Number :NA
Filing Date :NA
(62) Divisional to Application Number :NA
Filing Date :NA

(71)**Name of Applicant :**
1)QUALCOMM INCORPORATED
Address of Applicant :ATTN: International IP Administration 5775 Morehouse Drive San Diego California 92121 1714 U.S.A.
(72)**Name of Inventor :**
1)SHESHADRI Suhas H.
2)SRIVASTAVA Aditya N.

(57) Abstract :
A system and method for a mobile device to efficiently use a geofence capability without draining its battery and to allow flexibility in specifying various parameters related to geofencing such as the latency and confidence in determining when or where a geofence breach occurs and reducing the probability of not detecting a geofence breach.

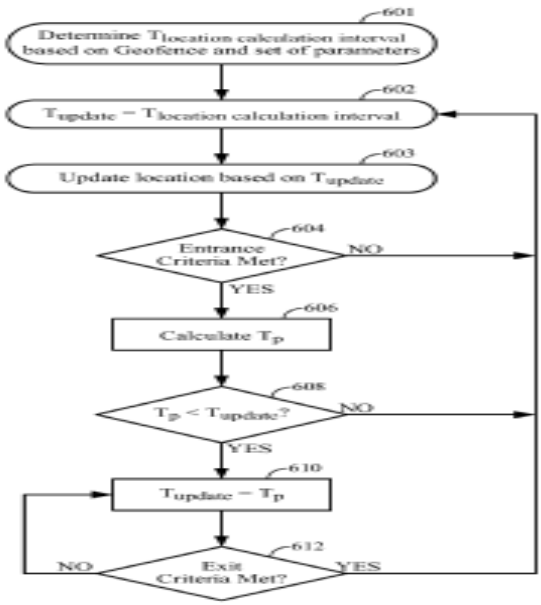

No. of Pages : 31 No. of Claims : 15

(12) PATENT APPLICATION PUBLICATION
(19) INDIA
(22) Date of filing of Application :29/10/2014

(21) Application No.2171/MUMNP/2014 A
(43) Publication Date : 28/08/2015

(54) Title of the invention : SIGNALING REDUCED USER EQUIPMENT PERFORMANCE IN WIRELESS COMMUNICATION SYSTEMS

(51) International classification :H04W28/16,H04W72/04
(31) Priority Document No :61/654,710
(32) Priority Date :01/06/2012
(33) Name of priority country :U.S.A.
(86) International Application No :PCT/US2013/043511
Filing Date :31/05/2013
(87) International Publication No :WO 2013/181483
(61) Patent of Addition to Application Number :NA
Filing Date :NA
(62) Divisional to Application Number :NA
Filing Date :NA

(71)**Name of Applicant :**
1)QUALCOMM INCORPORATED
Address of Applicant :ATTN: International IP Administration 5775 Morehouse Drive San Diego California 92121 1714 U.S.A.
(72)**Name of Inventor :**
1)FONG Gene
2)GAAL Peter
3)KITAZOE Masato

(57) Abstract :
Methods systems and devices are described for signaling reduced user equipment (UE) feature support in wireless networks. A UE may retrieve a performance capability of the UE in relation to a feature of a wireless communication system for which a minimum performance capability is specified by a wireless communication standard. The UE may accordingly signal to a base station a capability of the UE to support the wireless communication feature at a reduced level that is below the minimum performance capability specified by the wireless communication standard and communicate with the base station using the feature at the reduced level based on an indication from the base station.

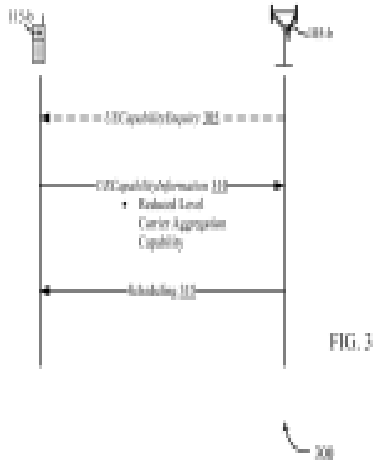

FIG. 3

No. of Pages : 57 No. of Claims : 57

(12) PATENT APPLICATION PUBLICATION
(21) Application No.4031/MUM/2013 A
(19) INDIA
(22) Date of filing of Application :24/12/2013
(43) Publication Date : 28/08/2015

(54) Title of the invention : MICROWAVE ASSISTED SYNTHESIS OF 1,2-DIARYLPYRIDAZINE-3,6-DIONES.

(51) International classification	:C07D 213/89, C07D 237/00
(31) Priority Document No	:NA
(32) Priority Date	:NA
(33) Name of priority country	:NA
(86) International Application No	:NA
Filing Date	:NA
(87) International Publication No	: NA
(61) Patent of Addition to Application Number	:NA
Filing Date	:NA
(62) Divisional to Application Number	:NA
Filing Date	:NA

(71)**Name of Applicant :**
1)DR. M. M. V.RAMANA
Address of Applicant :DEPARTMENT OF CHEMISTRY, UNIVERSITY OF MUMBAI, VIDYANAGARI, SANTACRUZ (EAST), MUMBAI 400 098, INDIA. Maharashtra India
(72)**Name of Inventor :**
1)DR. M. M. V.RAMANA
2)DR. SANJAY C. PAWAR

(57) Abstract :
This invention describes the synthesis of new 1, 2-diarylpyridazine-3, 6-diones by subjecting corresponding 3, 6-diaryloxypyridazines to Chapman rearrangement under microwave irradiation.

No. of Pages : 14 No. of Claims : 9

(12) PATENT APPLICATION PUBLICATION
(19) INDIA
(22) Date of filing of Application :28/10/2014
(21) Application No.2155/MUMNP/2014 A
(43) Publication Date : 28/08/2015

(54) Title of the invention : FUEL CELL STACK WITH END PLATE ASSEMBLY TO IMPROVE PRESSURE DISTRIBUTION IN THE STACK

(51) International classification :H01M8/24
(31) Priority Document No :1207551.1
(32) Priority Date :01/05/2012
(33) Name of priority country :U.K.
(86) International Application No :PCT/GB2013/051046
Filing Date :25/04/2013
(87) International Publication No :WO 2013/164575
(61) Patent of Addition to Application Number :NA
Filing Date :NA
(62) Divisional to Application Number :NA
Filing Date :NA

(71)**Name of Applicant :**
1)INTELLIGENT ENERGY LIMITED
Address of Applicant :Charnwood Building Holywell Park Ashby Road Loughborough LE11 3GB U.K.
(72)**Name of Inventor :**
1)HOOD Peter David

(57) Abstract :
A fuel cell stack assembly comprises a plurality of fuel cells in a stack the stack defining two opposing parallel end faces. An end plate assembly is provided at each opposing end face of the stack. The end plate assemblies are coupled together to thereby maintain the fuel cells in the stack under compression. At least one of the end plate assemblies comprises: a master plate defining a master compression face having a first portion and a second portion; a first slave plate defining a first slave compression face; and a second slave plate defining a second slave compression face. The first slave compression face faces the first portion of the master compression face and when assembled is in compressive relationship therewith and the second slave compression face faces the second portion of the master compression face and when assembled is also in compressive relationship therewith.

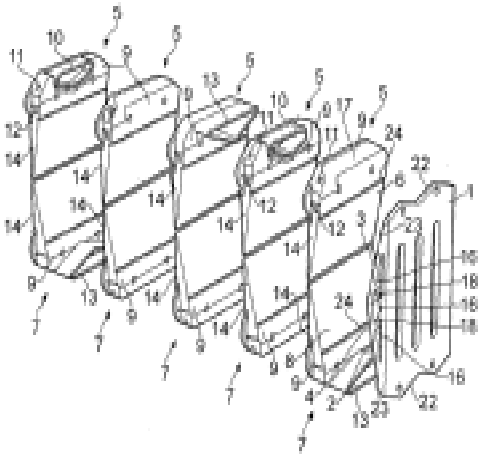

FIG. 1

No. of Pages : 27 No. of Claims : 17

(12) PATENT APPLICATION PUBLICATION
(19) INDIA
(22) Date of filing of Application :28/10/2014
(21) Application No.2156/MUMNP/2014 A
(43) Publication Date : 28/08/2015

(54) Title of the invention : NEW ALFENTANIL COMPOSITION FOR THE TREATMENT OF ACUTE PAIN

(51) International classification :A61K9/16,A61K9/20,A61K31/454
(31) Priority Document No :1207701.2
(32) Priority Date :02/05/2012
(33) Name of priority country :U.K.
(86) International Application No :PCT/GB2013/051131
Filing Date :01/05/2013
(87) International Publication No :WO 2013/164620
(61) Patent of Addition to Application Number :NA
Filing Date :NA
(62) Divisional to Application Number :NA
Filing Date :NA

(71)**Name of Applicant :**
1)OREXO AB
Address of Applicant :P O Box 303 SE 751 05 Uppsala Sweden
(72)**Name of Inventor :**
1)PETTERSSON Anders
2)SCHWAN Emil
3)JOHANSSON Barbro

(57) Abstract :
There is provided pharmaceutical compositions for the treatment of pain e.g. short term pain which compositions comprise a mixture comprising: (a) microparticles of alfentanil or a pharmaceutically acceptable salt thereof which microparticles are presented on the surfaces of larger carrier particles; (b) a water soluble weak base; and (c) a compound which is a weak acid which acid is presented in intimate mixture with the microparticles of alfentanil or salt thereof. The composition may further comprise a disintegrant. The acid is preferably citric acid.

No. of Pages : 37 No. of Claims : 18

(12) PATENT APPLICATION PUBLICATION
(19) INDIA
(22) Date of filing of Application :28/10/2014
(21) Application No.2157/MUMNP/2014 A
(43) Publication Date : 28/08/2015

(54) Title of the invention : A CURRENT COLLECTOR COMPONENT FOR A FUEL CELL

(51) International classification :H01M8/02,H01M8/04
(31) Priority Document No :1207574.3
(32) Priority Date :01/05/2012
(33) Name of priority country :U.K.
(86) International Application No :PCT/GB2013/051042
Filing Date :24/04/2013
(87) International Publication No :WO 2013/164573
(61) Patent of Addition to Application Number :NA
Filing Date :NA
(62) Divisional to Application Number :NA
Filing Date :NA

(71)**Name of Applicant :**
1)INTELLIGENT ENERGY LIMITED
Address of Applicant :Charnwood Building Holywell Park Ashby Road Loughborough LE11 3GB U.K.
(72)**Name of Inventor :**
1)HOOD Peter David

(57) Abstract :
A current collector component (206) for a fuel cell. The current collector component (206) comprises a first electrically conductive plate (210) configured to form a wall of a fluid confinement volume of a fuel cell; and a second electrically conductive plate (212) in electrical contact with the first electrically conductive plate (210). The second electrically conductive plate (212) comprises an external electrical connection (208). The second electrically conductive plate (212) has a higher electrical conductivity than the first electrically conductive plate (210). The first electrically conductive plate (210) has a higher resistance to corrosion than the second electrically conductive plate (212).

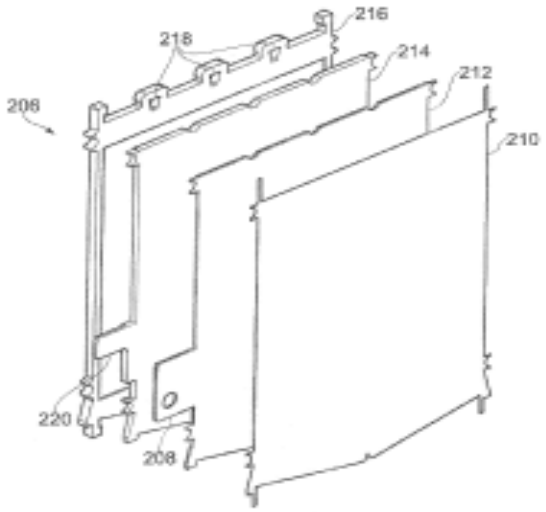

FIG. 2

No. of Pages : 23 No. of Claims : 28

(12) PATENT APPLICATION PUBLICATION
(21) Application No.76/MUM/2014 A
(19) INDIA
(22) Date of filing of Application :09/01/2014
(43) Publication Date : 28/08/2015

(54) Title of the invention : A NOVEL HUMIC ACID COATED ENTERIC FORMULATION AND A PROCESS FOR PREPARING THE SAME

(51) International classification	:A61K31/00, a61k9/00
(31) Priority Document No	:NA
(32) Priority Date	:NA
(33) Name of priority country	:NA
(86) International Application No	:NA
Filing Date	:NA
(87) International Publication No	: NA
(61) Patent of Addition to Application Number	:NA
Filing Date	:NA
(62) Divisional to Application Number	:NA
Filing Date	:NA

(71)**Name of Applicant :**
1)P.E SOCIETY'S MODERN COLLEGE OF PHARMACY
Address of Applicant :SECTOR-21, YAMUNANAGAR, NIGDI, PUNE, MAHARASHTRA, INDIA-411044. Maharashtra India
(72)**Name of Inventor :**
1)DR. SHAIKH KARIMUNNISA SAMEER
2)DR. CHAUDHARI PRAVEEN DIGAMBAR
3)DR. EKBOTE GAJANAN RAMAKANT

(57) Abstract :
The present invention provides a novel humic acid coated enteric pharmaceutical formulation comprising drug; numic acid; at least one polymer and at least one pharmaceutically acceptable excipient. The present invention also provides a process for preparing the same.

No. of Pages : 28 No. of Claims : 10

(12) PATENT APPLICATION PUBLICATION
(19) INDIA
(22) Date of filing of Application :10/01/2014
(21) Application No.88/MUM/2014 A
(43) Publication Date : 28/08/2015

(54) Title of the invention : SOLAR ENERGY CONCENTRATING SYSTEM

(51) International classification	:F24J2/10, F24J2/07	(71)**Name of Applicant :**
(31) Priority Document No	:NA	**1)C. N KULKARNI**
(32) Priority Date	:NA	Address of Applicant :FLAT NO C-101, ASHOKA AGAM, BHARATI VIDYAPEETH, DATTANAGAR ROAD, KATRAJ, PUNE 411043 Maharashtra India
(33) Name of priority country	:NA	
(86) International Application No	:NA	**2)DR.G.S. TASGAONKAR**
Filing Date	:NA	(72)**Name of Inventor :**
(87) International Publication No	: NA	**1)C. N KULKARNI**
(61) Patent of Addition to Application Number	:NA	**2)DR.G.S.TASGAONKAR**
Filing Date	:NA	
(62) Divisional to Application Number	:NA	
Filing Date	:NA	

(57) Abstract :
Disclosed is a solar energy concentrating system (100). The solar energy concentrating system (100) comprises a fixed reflector (10) and a moving receiver (20). The fixed reflector (10) is any of a circular reflector (10A) and a circular reflector of varying radii (10B). The moving receiver (20) is any of a circular receiver (20A) and a finned tube circular receiver (20B). The solar energy concentrating system (100) is a low cost system as the reflector (10) has small rim angle that increases the ratio of projected area to the reflector area. The solar energy concentrating system (100) has low tracking cost and reduced tracking power. Figure 1

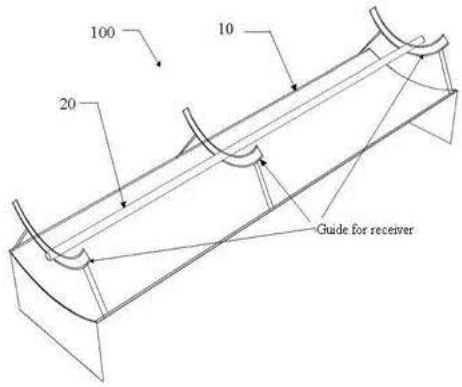

Figure 1

No. of Pages : 22 No. of Claims : 4

(12) PATENT APPLICATION PUBLICATION
(21) Application No.151/MUM/2014 A
(19) INDIA
(22) Date of filing of Application :16/01/2014
(43) Publication Date : 28/08/2015

(54) Title of the invention : AUTOMATIC MECHANICAL CONTROL FOR ELECTRICAL QUICK RAISE LOWER.

(51) International classification	:F02D1/00, G05D13/00	(71)**Name of Applicant :**
(31) Priority Document No	:NA	**1)DEERE & COMPANY**
(32) Priority Date	:NA	Address of Applicant :ONE JOHN DEERE PLACE, MOLINE, ILLINOIS, 61265-8098, USA U.S.A.
(33) Name of priority country	:NA	(72)**Name of Inventor :**
(86) International Application No	:NA	**1)SAXENA PRABAL A**
Filing Date	:NA	**2)GUPTA SAURABH**
(87) International Publication No	: NA	**3)BABAR SANTOSH**
(61) Patent of Addition to Application Number	:NA	**4)KADAM RAJAN**
Filing Date	:NA	**5)RAJKUMAR GOYAL**
(62) Divisional to Application Number	:NA	
Filing Date	:NA	

(57) Abstract :
The present invention teaches a controlled displacement mechanism which enables transmission of torque from a driving shaft of a motor to a driven shaft cooperating with an implement, via a coupler, thereby displacing the implement from an inoperative position to a desired position. Controlling of the displacement of the implement is achieved by appropriately positioning the constraining member to restrict displacement of the implement beyond the desired position.

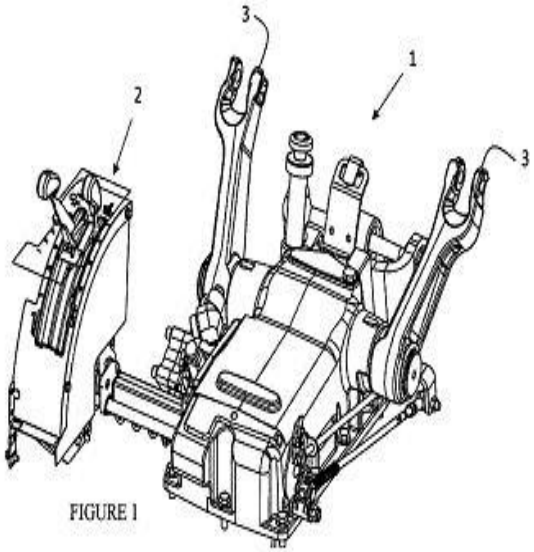

FIGURE 1

No. of Pages : 21 No. of Claims : 8

(12) PATENT APPLICATION PUBLICATION
(21) Application No.190/MUM/2014 A
(19) INDIA
(22) Date of filing of Application :21/01/2014
(43) Publication Date : 28/08/2015

(54) Title of the invention : SOLID ORAL PHARMACEUTICAL COMPOSITIONS COMPRISING TICAGRELOR OR SALTS THEREOF

(51) International classification	:A61K31/519, A61K9/20	(71)**Name of Applicant :**
(31) Priority Document No	:NA	**1)WOCKHARDT LIMITED**
(32) Priority Date	:NA	Address of Applicant :D-4, MIDC Area, Chikalthana, Aurangabad Maharashtra India
(33) Name of priority country	:NA	(72)**Name of Inventor :**
(86) International Application No	:NA	**1)Naidu, Venkataramana**
Filing Date	:NA	**2)Attarde, Pankaj Umakant**
(87) International Publication No	: NA	**3)Mehta, Navneet**
(61) Patent of Addition to Application Number	:NA	**4)Jain,Girish Kumar**
Filing Date	:NA	
(62) Divisional to Application Number	:NA	
Filing Date	:NA	

(57) Abstract :
The present invention relates to solid oral pharmaceutical compositions comprising ticagrelor or salts thereof. In particular, the present invention relates to solid oral pharmaceutical compositions comprising ticagrelor or salts thereof and at least one pharmaceutically acceptable excipient other than water-insoluble fillers. There is also provided a method of reducing the rate of thrombotic cardiovascular events in patients with acute coronary syndrome (ACS) by using the solid oral pharmaceutical composition ticagrelor or salts thereof.

No. of Pages : 18 No. of Claims : 9

(12) PATENT APPLICATION PUBLICATION
(19) INDIA
(22) Date of filing of Application :21/01/2014
(21) Application No.200/MUM/2014 A
(43) Publication Date : 28/08/2015

(54) Title of the invention : AN EYEWARE DEVICE DEVOID OF RESTING MEANS.

(51) International classification :G02C5/22
(31) Priority Document No :NA
(32) Priority Date :NA
(33) Name of priority country :NA
(86) International Application No :NA
Filing Date :NA
(87) International Publication No : NA
(61) Patent of Addition to Application Number :NA
Filing Date :NA
(62) Divisional to Application Number :NA
Filing Date :NA

(71)**Name of Applicant :**
1)KASHIKAR AJAY G.
Address of Applicant :A2, 201, MAHADKAR RESIDENCY, RIGHT BHUSARI COLONY, PAUD ROAD, PUNE, MAHARASHTRA, INDIA-411 038 Maharashtra India
(72)**Name of Inventor :**
1)KASHIKAR AJAY G.

(57) Abstract :
The present invention relates to an eye ware device (100) having a pair of temple bars (02) attached to a structure (04), characterized in that the tip (06) of said temple bars comprise lift means (08) capable of lifting said structure upwardly when in an operative position and said structure (04) is devoid of resting means. The eye ware device (100) of the present invention further comprises a massager (12) to exert massaging effect to a user.

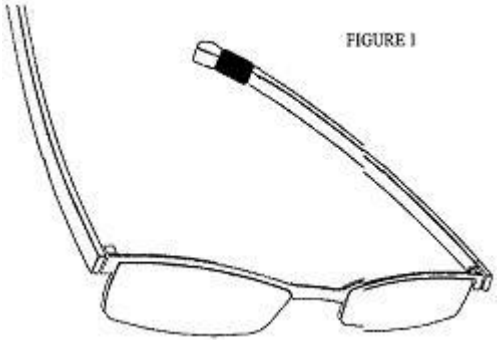

No. of Pages : 15 No. of Claims : 9

(12) PATENT APPLICATION PUBLICATION
(19) INDIA
(22) Date of filing of Application :21/10/2014
(21) Application No.2099/MUMNP/2014 A
(43) Publication Date : 28/08/2015

(54) Title of the invention : SYSTEMS AND METHODS FOR GROUP COMMUNICATION USING A MOBILE DEVICE WITH MODE TRANSITION BASED ON MOTION

(51) International classification :H04M1/60,H04W76/00,H04W76/04
(31) Priority Document No :13/479246
(32) Priority Date :23/05/2012
(33) Name of priority country :U.S.A.
(86) International Application No :PCT/US2013/041763
Filing Date :20/05/2013
(87) International Publication No :WO 2013/177013
(61) Patent of Addition to Application Number :NA
Filing Date :NA
(62) Divisional to Application Number :NA
Filing Date :NA

(71)**Name of Applicant :**
1)QUALCOMM INCORPORATED
Address of Applicant :Attn: International IP Administration 5775 Morehouse Drive San Diego California 92121 U.S.A.
(72)**Name of Inventor :**
1)SUBBARAMOO Shobha M.
2)LINDNER Mark A..

(57) Abstract :
Methods and systems of communication using a mobile device that include detecting a movement of the mobile device associated with transitioning from speaker phone mode to earpiece mode or vice versa and in response to detecting such movement automatically transitioning the device to a different mode of operation. The detected action may be the motion and/or positioning of the device handset such as the movement of the handset towards or away from the users ear and/or the placement of the handset on a surface in a face up or face down position. Further methods and systems for transitioning between communication pathways and security modes in response to a detected movement of the mobile device.

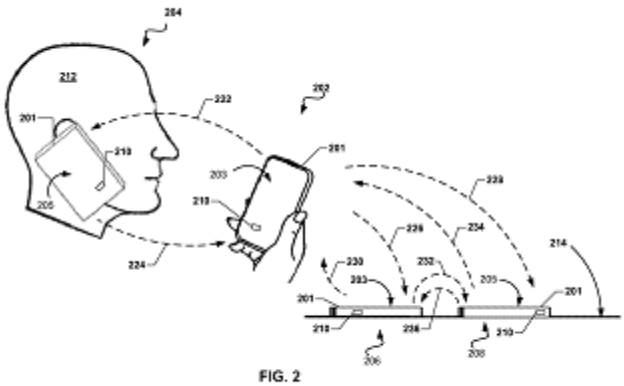

FIG. 2

No. of Pages : 113 No. of Claims : 151

(12) PATENT APPLICATION PUBLICATION
(21) Application No.2168/MUMNP/2014 A
(19) INDIA
(22) Date of filing of Application :28/10/2014
(43) Publication Date : 28/08/2015

(54) Title of the invention : PULSE WIDTH MODULATION METHOD FOR CONTROLLING OXYGEN CONCENTRATION IN ANESTHETIC MACHINE OR VENTILATOR

(51) International classification	:A61M16/10	(71)**Name of Applicant :**
(31) Priority Document No	:201210575443.4	**1)BEIJING AEONMED CO. LTD.**
(32) Priority Date	:26/12/2012	Address of Applicant :NO.4 Hangfeng Road Fengtai Science Park Fengtai District Beijing 100070 China
(33) Name of priority country	:China	
(86) International Application No	:PCT/CN2013/085681	(72)**Name of Inventor :**
Filing Date	:22/10/2013	**1)CHENG Jie**
(87) International Publication No	:WO 2014/101543	
(61) Patent of Addition to Application Number	:NA	
Filing Date	:NA	
(62) Divisional to Application Number	:NA	
Filing Date	:NA	

(57) Abstract :
A pulse width modulation method for controlling oxygen concentration in an anesthetic machine or in a ventilator comprising the following steps: step A with a predetermined time interval as one pulse interval a processing unit divides a breathing cycle into multiple consecutive pulse intervals; step B a data calculation unit calculates the average inspiratory flow in a certain time interval on the basis of inspiratory flows in one cycle that are detected by a detecting unit and then calculates the average oxygen flow of this stage on the basis of the average inspiratory flow; and step C a control unit selects a solenoid valve and controls the opening and closing times thereof on the basis of the average oxygen flow as calculated in the previous step to implement control of the oxygen flow for each interval. By dividing one breathing cycle into multiple consecutive stages with equally spaced pulse cycles by calculating the oxygen flow for each stage and then by controlling the opening/closing of the solenoid valve to implement control of oxygen flow the method implements precision control of the oxygen concentration during ventilation thus allowing a breathing machine to be provided with increased safeness and stability.

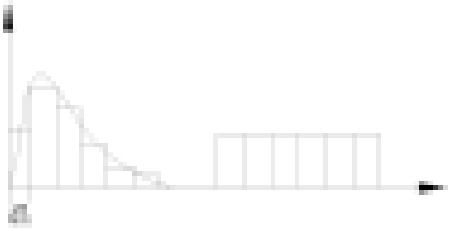

No. of Pages : 15 No. of Claims : 10

(12) PATENT APPLICATION PUBLICATION
(19) INDIA
(22) Date of filing of Application :28/10/2014
(21) Application No.2169/MUMNP/2014 A
(43) Publication Date : 28/08/2015

(54) Title of the invention : PROCESS AND EQUIPMENT FOR CONVERTING CARBON DIOXIDE IN FLUE GAS INTO NATURAL GAS BY USING DUMP POWER ENERGY

(51) International classification :C10L3/06,C10L3/08,C07C1/12
(31) Priority Document No :201210121972.7
(32) Priority Date :24/04/2012
(33) Name of priority country :China
(86) International Application No :PCT/CN2013/074228
Filing Date :16/04/2013
(87) International Publication No :WO 2013/159661
(61) Patent of Addition to Application Number :NA
Filing Date :NA
(62) Divisional to Application Number :NA
Filing Date :NA

(71)**Name of Applicant :**
1)WUHAN KAIDI ENGINEERING TECHNOLOGY RESEARCH INSTITUTE CO. LTD.
Address of Applicant :T1 Jiangxia Avenue Miaoshan Development Zone Jiangxia District Wuhan Hubei 430212 China
(72)**Name of Inventor :**
1)ZHANG Yanfeng
2)CHEN Yilong
3)WANG Zhilong
4)FANG Zhangjian
5)ZHENG Xingcai

(57) Abstract :
A process for converting carbon dioxide in flue gas into natural gas by using dump power energy. The process uses the dump power energy to electrolyze water to generate hydrogen gas; the hydrogen gas and carbon dioxide captured from industrial flue gas are subjected to a methanation reaction; heat generated from the methanation reaction is used to heat water to generate superheated water vapor for driving a steam turbogenerator to generate power for supplementing power energy for electrolyzing water and thus natural gas is obtained by synthesizing. Equipment used in synthesized natural gas is further provided. The equipment is mainly formed by combining a transforming and rectifying device (1) an electrolytic bath (2) a steam turbogenerator (4) a carbon dioxide heater (21) at least two stage of fixed bed reactors (11 13) various indirect heat exchangers a steam drum (12) a natural gas condenser (8) and a process water pipeline (3).

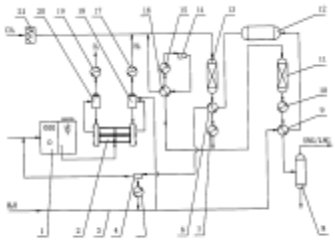

Fig. 1

No. of Pages : 20 No. of Claims : 14

(12) PATENT APPLICATION PUBLICATION
(21) Application No.2284/MUM/2014 A
(19) INDIA
(22) Date of filing of Application :12/07/2014
(43) Publication Date : 28/08/2015

(54) Title of the invention : ACCELERATED POWDER SEGREGATION TESTING APPARATUS AND METHOD

(51) International classification :G01M7/02
(31) Priority Document No :61/847,102
(32) Priority Date :17/07/2013
(33) Name of priority country :U.S.A.
(86) International Application No :PCT//
Filing Date :01/01/1900
(87) International Publication No : NA
(61) Patent of Addition to Application Number :NA
Filing Date :NA
(62) Divisional to Application Number :NA
Filing Date :NA

(71)**Name of Applicant :**
1)SANYASI R. KALIDINDI
Address of Applicant :1 ANGELO COURT MONROE, NEW JERSEY 08831, UNITED STATES OF AMERICA U.S.A.
(72)**Name of Inventor :**
1)SANYASI R. KALIDINDI

(57) Abstract :
An accelerated powder segregation testing apparatus and method are disclosed. The apparatus consists of an angularly oriented ramp 10 mounted on a vibration device 22. The powder to be tested is fed into an origin portion 14 of the ramp 10, and when the vibrator 22 is activated, the powder moves along the ramp 10. As the powder exits after the test, unit-dose powder samples are collected, compacted and analyzed for differential in content uniformity. By comparing the results from several formulations, the formulation that is most resistant to segregation can be selected for production.

No. of Pages : 12 No. of Claims : 11

(12) PATENT APPLICATION PUBLICATION
(19) INDIA
(22) Date of filing of Application :16/01/2014

(21) Application No.150/MUM/2014 A
(43) Publication Date : 28/08/2015

(54) Title of the invention : PROCESS FOR FERMENTATION OF CASHEW APPLE JUICE USING MICROBIAL CONSORTIUM

(51) International classification	:C12G3/02, A23F 5/24
(31) Priority Document No	:NA
(32) Priority Date	:NA
(33) Name of priority country	:NA
(86) International Application No	:NA
Filing Date	:NA
(87) International Publication No	: NA
(61) Patent of Addition to Application Number	:NA
Filing Date	:NA
(62) Divisional to Application Number	:NA
Filing Date	:NA

(71)**Name of Applicant :**
1)Indian Council Of Agricultural Research
Address of Applicant :ICAR Research Complex for Goa, Ela, Old Goa, Goa 403402, India Goa India
(72)**Name of Inventor :**
1)Dr. S. B. Barbuddhe
2)Dr. A. R. Desai
3)Dr. N. P. Singh
4)Mr. G. D. Bhakta

(57) Abstract :
Disclosed herein is an optimized fermentative process for production of Feni that that utilizes a specific operation-scheme and microbial consortium to result in an improved Feni product characterized in that it retains well the delicate aromatics, congeners and flavor elements but advantageously not the strong unpleasant odors associated otherwise with traditional practices of Feni production.

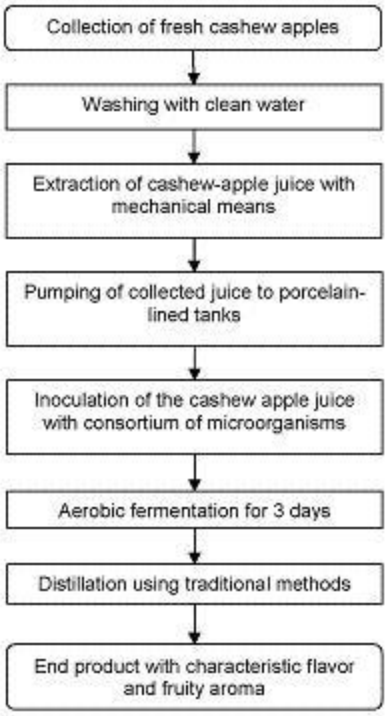

Table A

No. of Pages : 15 No. of Claims : 10

(12) PATENT APPLICATION PUBLICATION
(21) Application No.189/MUM/2014 A
(19) INDIA
(22) Date of filing of Application :21/01/2014
(43) Publication Date : 28/08/2015

(54) Title of the invention : PROCESS FOR PREPARING SOLID ORAL PHARMACEUTICAL COMPOSITIONS COMPRISING TICAGRELOR OR SALTS THEREOF

(51) International classification	:A61K9/20, A61K31/4184
(31) Priority Document No	:NA
(32) Priority Date	:NA
(33) Name of priority country	:NA
(86) International Application No	:NA
Filing Date	:NA
(87) International Publication No	: NA
(61) Patent of Addition to Application Number	:NA
Filing Date	:NA
(62) Divisional to Application Number	:NA
Filing Date	:NA

(71)**Name of Applicant :**
1)WOCKHARDT LIMITED
Address of Applicant :D-4, MIDC Area, Chikalthana, Aurangabad Maharashtra India
(72)**Name of Inventor :**
1)Naidu, Venkataramana
2)Attarde, Pankaj Umakant
3)Mehta, Navneet
4)Jain,Girish Kumar

(57) Abstract :
The present invention relates to solid oral pharmaceutical compositions comprising ticagrelor or salts thereof. In particular, the present invention relates to a composition comprising ticagrelor or salts thereof in an amount less than 20 % of the weight of total composition and at least one pharmaceutically acceptable excipient. The invention further relates to method of reducing the rate of thrombotic cardiovascular events in patients with acute coronary syndrome (ACS) by using the composition ticagrelor or salts thereof.

No. of Pages : 19 No. of Claims : 9

(12) PATENT APPLICATION PUBLICATION
(19) INDIA
(22) Date of filing of Application :29/10/2014

(21) Application No.2180/MUMNP/2014 A
(43) Publication Date : 28/08/2015

(54) Title of the invention : IMAGE DRIVEN VIEW MANAGEMENT FOR ANNOTATIONS

(51) International classification :G06T19/00,G06T11/60
(31) Priority Document No :61/650,884
(32) Priority Date :23/05/2012
(33) Name of priority country :U.S.A.
(86) International Application No :PCT/US2013/038253
Filing Date :25/04/2013
(87) International Publication No :WO 2013/176830
(61) Patent of Addition to Application Number :NA
Filing Date :NA
(62) Divisional to Application Number :NA
Filing Date :NA

(71)**Name of Applicant :**
1)QUALCOMM INCORPORATED
Address of Applicant :ATTN: International IP Administration 5775 Morehouse Drive San Diego CA 92121 1714 U.S.A.
(72)**Name of Inventor :**
1)GRASSET Raphael
2)TATZGERN Markus
3)LANGLOTZ Tobias
4)KALKOFEN Denis
5)SCHMALSTIEG Dieter

(57) Abstract :
A mobile device uses an image driven view management approach for annotating images in real time. An image based layout process used by the mobile device computes a saliency map and generates an edge map from a frame of a video stream. The saliency map may be further processed by applying thresholds to reduce the number of saliency levels. The saliency map and edge map are used together to determine a layout position of labels to be rendered over the video stream. The labels are displayed in the layout position until a change of orientation of the camera that exceeds a threshold is detected. Additionally the representation of the label may be adjusted e.g. based on a plurality of pixels bounded by an area that is coincident with a layout position for a label in the video frame.

Fig. 4

No. of Pages : 38 No. of Claims : 40

(12) PATENT APPLICATION PUBLICATION
(19) INDIA
(22) Date of filing of Application :29/10/2014

(21) Application No.2181/MUMNP/2014 A
(43) Publication Date : 28/08/2015

(54) Title of the invention : UNIFIED FRACTIONAL SEARCH AND MOTION COMPENSATION ARCHITECTURE ACROSS MULTIPLE VIDEO STANDARDS

(51) International classification :H04N7/26,H04N7/36,H04N7/46
(31) Priority Document No :61/646,672
(32) Priority Date :14/05/2012
(33) Name of priority country :U.S.A.
(86) International Application No :PCT/US2013/040598
Filing Date :10/05/2013
(87) International Publication No :WO 2013/173191
(61) Patent of Addition to Application Number :NA
Filing Date :NA
(62) Divisional to Application Number :NA
Filing Date :NA

(71)**Name of Applicant :**
1)QUALCOMM INCORPORATED
Address of Applicant :ATTN: International IP Administration 5775 Morehouse Drive San Diego California 92121 1714 U.S.A.
(72)**Name of Inventor :**
1)CHEUNG Stephen
2)HUANG Ling Feng
3)MOHAN Sumit

(57) Abstract :
Methods and systems for performing at least one of video encoding and video decoding are disclosed. In one implementation the system includes a controller configured to determine a video standard associated with a portion of the video data each portion of the video data associated with one of a plurality of video standards. The controller is further configured to provide a set of the filter parameters which are associated with a video standard to be used for at least one of the video encoding and decoding and at least one filter configured to filter at least one reference pixel received from the reference pixel memory based at least in part on the provided set of filter parameters.

5 / 15

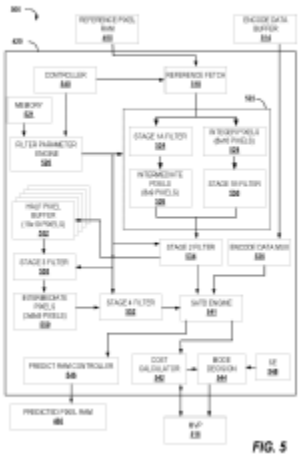

FIG. 5

No. of Pages : 48 No. of Claims : 42

(12) PATENT APPLICATION PUBLICATION
(19) INDIA
(22) Date of filing of Application :21/01/2014

(21) Application No.210/MUM/2014 A
(43) Publication Date : 28/08/2015

(54) Title of the invention : TREATMENT OF WASTEWATER BY BIOFILTRATION

(51) International classification	:C02F3/06, C02F3/10
(31) Priority Document No	:NA
(32) Priority Date	:NA
(33) Name of priority country	:NA
(86) International Application No	:NA
Filing Date	:NA
(87) International Publication No	: NA
(61) Patent of Addition to Application Number	:NA
Filing Date	:NA
(62) Divisional to Application Number	:NA
Filing Date	:NA

(71)**Name of Applicant :**
1)RELIANCE INDUSTRIES LIMITED
Address of Applicant :3RD FLOOR, MAKERS CHAMBER-IV, 222, NARIMAN POINT, MUMBAI-400 021, MAHARASHTRA, INDIA. Maharashtra India
(72)**Name of Inventor :**
1)AMALORPAVANATHAN, JOSEPHINE ANTONETTE SOPHIA
2)JAGDAMBALAL, RAJ KUMAR
3)SHAH, YAMINI SANJAY
4)PAL, NITIN
5)SAKSENA, GAURAV
6)JASRA, RAKSHVIR

(57) Abstract :
The present disclosure relates to a process for the treatment of wastewater having a pH ranging from 6 to 10, a COD ranging from 100 ppm to 1000 ppm, a turbidity ranging from 50 NTU to 500 NTU and a ratio of BOD/COD less than 0.6. The present disclosure also relates to the formation of a GAC supported bio-film; and passing a portion of the wastewater through the GAC supported bio-film to obtain a bio-filtered water having COD ranging from 5 ppm to 200 ppm and turbidity ranging from 2 NTU to 75 NTU.

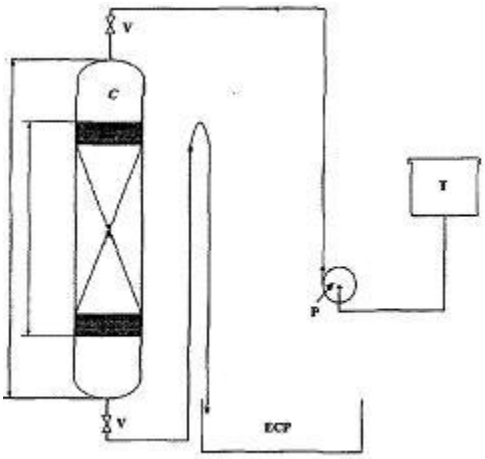

Fig. 1

No. of Pages : 32 No. of Claims : 16

(12) PATENT APPLICATION PUBLICATION
(19) INDIA
(22) Date of filing of Application :30/12/2014

(21) Application No.2657/MUMNP/2014 A
(43) Publication Date : 28/08/2015

(54) Title of the invention : MACROCYCLIC INHIBITORS OF FLAVIVIRIDAE VIRUSES

(51) International classification :C07D487/08,C07D498/08,C07D498/18
(31) Priority Document No :61/657,562
(32) Priority Date :08/06/2012
(33) Name of priority country :U.S.A.
(86) International Application No :PCT/US2013/044812
Filing Date :07/06/2013
(87) International Publication No :WO 2013/185093
(61) Patent of Addition to Application Number :NA
Filing Date :NA
(62) Divisional to Application Number :NA
Filing Date :NA

(71)**Name of Applicant :**
1)GILEAD SCIENCES INC.
Address of Applicant :333 Lakeside Drive Foster City California 94404 U.S.A.
2)SELCIA LIMITED
(72)**Name of Inventor :**
1)STEADMAN Victoria Alexandra
2)POULLENNEC Karine G.
3)LAZARIDES Linos
4)ACIRO Caroline
5)DEAN David Kenneth
6)KEATS Andrew John
7)SIEGEL Dustin Scott
8)SCHRIER Adam James
9)MACKMAN Richard
10)JANSA Petr
11)WATT Gregory
12)HIGHTON Adrian John
13)CHIVA Jean Yves

(57) Abstract :
Provided are compounds of Formula I and pharmaceutically acceptable salts and esters thereof. The compounds compositions and methods provided are useful for the treatment of virus infections particularly hepatitis C infections.

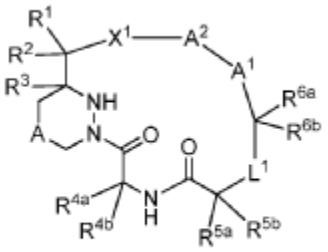

Formula I

No. of Pages : 385 No. of Claims : 37

(12) PATENT APPLICATION PUBLICATION
(19) INDIA
(22) Date of filing of Application :30/12/2014

(21) Application No.2659/MUMNP/2014 A
(43) Publication Date : 28/08/2015

(54) Title of the invention : SIGNALLING INFORMATION FOR CONSECUTIVE CODED VIDEO SEQUENCES THAT HAVE THE SAME ASPECT RATIO BUT DIFFERENT PICTURE RESOLUTIONS

(51) International classification :H04N7/46,H04N7/26,H04N21/4402
(31) Priority Document No :61/667,364
(32) Priority Date :02/07/2012
(33) Name of priority country :U.S.A.
(86) International Application No :PCT/US2013/049174
Filing Date :02/07/2013
(87) International Publication No :WO 2014/008321
(61) Patent of Addition to Application Number :NA
Filing Date :NA
(62) Divisional to Application Number :NA
Filing Date :NA

(71)**Name of Applicant :**
1)CISCO TECHNOLOGY INC.
Address of Applicant :170 West Tasman Drive San Jose CA 95134 U.S.A.
(72)**Name of Inventor :**
1)RODRIGUEZ Arturo A.
2)KATTI Anil Kumar
3)HWANG Hsiang Yeh

(57) Abstract :
In one embodiment receiving at a video stream receive and process (VSRP) device auxiliary information corresponding to a video stream the auxiliary information corresponding to a spatial span; receiving at the VSRP device the video stream comprising a first portion of compressed pictures having a first picture resolution format and a second portion having a second picture resolution format during transmission over a given channel wherein the first compressed picture of the second portion of compressed pictures is the first compressed picture in the video stream after the last compressed picture of the first portion of compressed pictures; and decoding the first and second portions of the video stream and scaling the decoded picture data from the second video stream according to the received auxiliary information and outputting the first and second decoded portions of the video stream such that a spatial span of decoded picture data from the second video stream is same as that of the first video stream.

FIG. 1

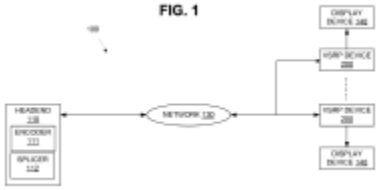

No. of Pages : 59 No. of Claims : 20

(12) PATENT APPLICATION PUBLICATION
(19) INDIA
(22) Date of filing of Application :30/12/2014
(21) Application No.2660/MUMNP/2014 A
(43) Publication Date : 28/08/2015

(54) Title of the invention : METHOD FOR DETECTING ABNORMALLY FREQUENT DIESEL PARTICULATE FILTER REGENERATION ENGINE AND EXHAUST AFTER TREATMENT SYSTEM AND WARNING SYSTEM AND METHOD

(51) International classification :F01N3/023
(31) Priority Document No :NA
(32) Priority Date :NA
(33) Name of priority country :NA
(86) International Application No :PCT/US2012/043524
Filing Date :21/06/2012
(87) International Publication No :WO 2013/191698
(61) Patent of Addition to Application Number :NA
Filing Date :NA
(62) Divisional to Application Number :NA
Filing Date :NA

(71)**Name of Applicant :**
1)MACK TRUCKS INC.
Address of Applicant :7900 National Service Road Greensboro NC 27409 U.S.A.
(72)**Name of Inventor :**
1)DONG Qunlong
2)MARLEY Jeffrey

(57) Abstract :
A method is provided for detecting abnormally frequent diesel particulate filter (DPF) regeneration. The method includes measuring a pressure drop across the DPF and using the measured pressure drop to calculate a pressure drop based soot load estimate calculating soot output from an engine model and using the calculated soot output to calculate an emissions based soot load estimate comparing the pressure drop based soot load estimate with the emissions based soot load estimate and providing a warning if a difference between the pressure drop based soot load estimate and the emissions based soot load estimate exceeds a predetermined

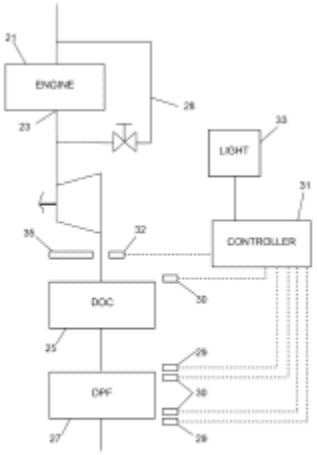

FIG. 1

No. of Pages : 17 No. of Claims : 20

(12) PATENT APPLICATION PUBLICATION
(19) INDIA
(22) Date of filing of Application :30/12/2014
(21) Application No.2661/MUMNP/2014 A
(43) Publication Date : 28/08/2015

(54) Title of the invention : THIENOPYRIDONE DERIVATIVES USEFUL AS ACTIVATORS OF AMPK

(51) International classification :C07D495/04,A61K31/4365,A61P3/10
(31) Priority Document No :12305775.4
(32) Priority Date :29/06/2012
(33) Name of priority country :EPO
(86) International Application No :PCT/EP2013/063741
Filing Date :28/06/2013
(87) International Publication No :WO 2014/001554
(61) Patent of Addition to Application Number :NA
Filing Date :NA
(62) Divisional to Application Number :NA
Filing Date :NA

(71)**Name of Applicant :**
1)POXEL
Address of Applicant :200 avenue Jean Jaur¨s F 69007 Lyon France
(72)**Name of Inventor :**
1)CRAVO Daniel
2)HALLAKOU BOZEC Sophie
3)BOLZE Sbastien
4)LEPIFRE Franck
5)FAVERIEL Laurent
6)DURAND Jean Denis
7)CHARON Christine

(57) Abstract :
Activators of AMPK and therapeutic uses thereof The invention relates to compounds that are direct activators of AMPK (AMP activated protein kinase) and their use in the treatment of disorders regulated by activation of AMPK. For instance compounds according to the invention are useful for the treatment of diabetes metabolic syndrome obesity liver disease hepatic steatosis non alcoholic fatty liver disease (NAFLD) non alcoholic steato hepatitis (NASH) liver fibrosis dyslipidemia hypertriglyceridemia hypercholesterolemia inflammation cancer cardiovascular diseases atherosclerosis high blood pressure retinopathies or neuropathies.

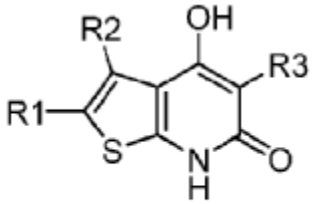

(1)

No. of Pages : 41 No. of Claims : 10

(12) PATENT APPLICATION PUBLICATION
(19) INDIA
(22) Date of filing of Application :30/12/2014

(21) Application No.2662/MUMNP/2014 A
(43) Publication Date : 28/08/2015

(54) Title of the invention : HIGH SOLIDS AND LOW VISCOUS AQUEOUS SLURRIES OF CALCIUM CARBONATE COMPRISING MATERIALS WITH IMPROVED RHEOLOGICAL STABILITY UNDER INCREASED TEMPERATURE

(51) International classification :D21H17/69,D21H19/38,D21H19/44
(31) Priority Document No :12176392.4
(32) Priority Date :13/07/2012
(33) Name of priority country :EPO
(86) International Application No :PCT/EP2013/064537
Filing Date :10/07/2013
(87) International Publication No :WO 2014/009396
(61) Patent of Addition to Application Number :NA
Filing Date :NA
(62) Divisional to Application Number :NA
Filing Date :NA

(71)**Name of Applicant :**
1)OMYA INTERNATIONAL AG
Address of Applicant :Baslerstrasse 42 CH 4665 Oftringen Switzerland
(72)**Name of Inventor :**
1)RENTSCH Samuel
2)BURI Matthias
3)GANE Patrick A. C.

(57) Abstract :
The present invention concerns aqueous slurries with improved rheo logical stability under increased temperature. The slurries comprise a calcium carbonate containing material and at least one comb polymer.

Figure

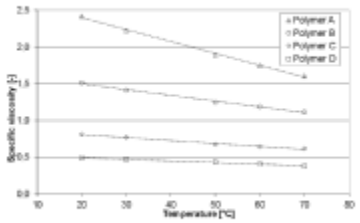

Figure 1: Specific viscosity of the polymers A to D as a function of the temperature

No. of Pages : 46 No. of Claims : 22

(12) PATENT APPLICATION PUBLICATION
(19) INDIA
(22) Date of filing of Application :30/12/2014

(21) Application No.2672/MUMNP/2014 A
(43) Publication Date : 28/08/2015

(54) Title of the invention : LOW ENERGY LASER SEEKER

(51) International classification :G01S17/66,F41G3/14
(31) Priority Document No :220758
(32) Priority Date :04/07/2012
(33) Name of priority country :Israel
(86) International Application No :PCT/IL2013/050571
Filing Date :04/07/2013
(87) International Publication No :WO 2014/006623
(61) Patent of Addition to Application Number :NA
Filing Date :NA
(62) Divisional to Application Number :NA
Filing Date :NA

(71)**Name of Applicant :**
1)ISRAEL AEROSPACE INDUSTRIES LTD.
Address of Applicant :Ben Gurion International Airport 70100 Lod Israel
(72)**Name of Inventor :**
1)KARAZI Uri
2)LEVY Benjamin
3)HEYMANN Valery

(57) Abstract :
The presently disclosed subject matter includes a method and system for enabling detection of signal reflection from a target designated by a pulse laser spot generated by a low power laser designator. A signal comprising true signal portions reflected from said target and noise is received and sampled and a first value or a second value is assigned to each sample. The assigned (i) values in K pulse rate intervals are summed to obtain respective summed values. One or more candidate clusters are identified from among the summed values and a final candidate cluster is selected from among said one or more candidate clusters. The final candidate cluster is located with respective samples of an incoming pulse rate interval thereby detecting an area within said signal which comprises the true signal portions.

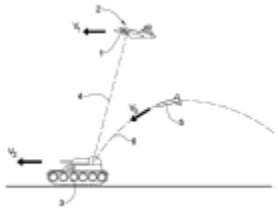

Fig. 1

No. of Pages : 51 No. of Claims : 36

(12) PATENT APPLICATION PUBLICATION
(19) INDIA
(22) Date of filing of Application :30/12/2014

(21) Application No.2673/MUMNP/2014 A
(43) Publication Date : 28/08/2015

(54) Title of the invention : FRICTION MATERIAL

(51) International classification :C09K3/14,F16D69/02
(31) Priority Document No :2012-150507
(32) Priority Date :04/07/2012
(33) Name of priority country :Japan
(86) International Application No :PCT/JP2013/067614
Filing Date :27/06/2013
(87) International Publication No :WO 2014/007130
(61) Patent of Addition to Application Number :NA
Filing Date :NA
(62) Divisional to Application Number :NA
Filing Date :NA

(71)**Name of Applicant :**
1)NISSHINBO BRAKE INC.
Address of Applicant :31 11Nihonbashi Ningyocho 2 chomeChuo ku Tokyo 1038650 Japan
(72)**Name of Inventor :**
1)YAMAMOTO Kazuhide
2)MATSUZAWA Takuya
3)KOBAYASHI Mitsuru

(57) Abstract :
The present invention addresses the problem of providing a friction material which is obtained by molding an NAO friction material composition and which ensures good abrasion resistance and suffers from little rust fixing said NAO friction material composition comprising a fibrous base material a binder and a friction modifier and containing at least one raw material from which sulfate ions are eluted. The problem can be resolved by incorporating a hydrophilic activated carbon as a friction modifier into the friction material composition. The amount of the hydrophilic activated carbon incorporated is 0.4 to 5wt% relative to the friction material composition while the mean particle diameter of the hydrophilic activated carbon is 80 to 200μm. Further a hydrophilic phenol resin is incorporated as a binder into the friction material composition in an amount of 8 to 12wt% relative to the friction material composition.

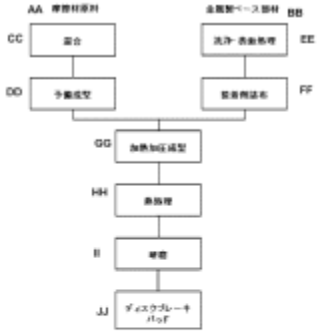

FIG. 1:
AA Raw materials for friction material
BB Metal-made base member
CC Mixing
DD Pre-molding
EE Washing/surface treatment
FF Application of adhesive
GG Hot pressure molding
HH Heat treatment
II Grinding
JJ Disk brake pad

No. of Pages : 16 No. of Claims : 4

(12) PATENT APPLICATION PUBLICATION
(19) INDIA
(22) Date of filing of Application :30/10/2014
(21) Application No.2187/MUMNP/2014 A
(43) Publication Date : 28/08/2015

(54) Title of the invention : A DEVICE FOR DETECTING FLUID LEAKAGE

(51) International classification :G01M3/02,G01M3/28,G01M3/32
(31) Priority Document No :NA
(32) Priority Date :NA
(33) Name of priority country :NA
(86) International Application No :PCT/IB2012/052168
Filing Date :01/05/2012
(87) International Publication No :WO 2013/164662
(61) Patent of Addition to Application Number :NA
Filing Date :NA
(62) Divisional to Application Number :NA
Filing Date :NA

(71)**Name of Applicant :**
1)CTR MANUFACTURING INDUSTRIES LIMITED
Address of Applicant :Nagar Road 411 014 Pune Maharashtra Maharashtra India
(72)**Name of Inventor :**
1)WAKCHAURE Vijaykumar K.

(57) Abstract :
The subject matter disclosed herein relates to fluid leakage detection. More particularly subject matter relates to a device for detecting fluid leakage in a fluid drain pipe (1) attached to a power transformer device. The device comprises fluid collection compartment (3) attached to bottom of the fluid drain pipe (1) and a fluid level switch (6) is positioned in the fluid collection compartment (3) to generate alarm signal to indicate fluid leakage.

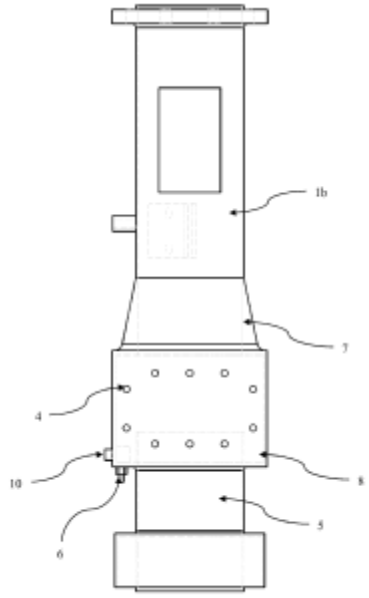

Figure 2b

No. of Pages : 15 No. of Claims : 9

(12) PATENT APPLICATION PUBLICATION
(19) INDIA
(22) Date of filing of Application :30/10/2014

(21) Application No.2188/MUMNP/2014 A
(43) Publication Date : 28/08/2015

(54) Title of the invention : PRESSURE TRANSMITTER WITH HYDROGEN GETTER

(51) International classification :G01L19/06
(31) Priority Document No :13/477,418
(32) Priority Date :22/05/2012
(33) Name of priority country :U.S.A.
(86) International Application No :PCT/US2013/030399
Filing Date :12/03/2013
(87) International Publication No :WO 2013/176737
(61) Patent of Addition to Application Number :NA
Filing Date :NA
(62) Divisional to Application Number :NA
Filing Date :NA

(71)**Name of Applicant :**
1)ROSEMOUNT INC.
Address of Applicant :8200 Market Boulevard Chanhassen MN 55317 U.S.A.
(72)**Name of Inventor :**
1)HEDTKE Robert C.

(57) Abstract :
A process variable transmitter (32) for measuring a pressure of a process fluid includes a sensor module (52) a pressure inlet formed in the sensor module an isolation diaphragm (90) positioned in the pressure inlet a pressure sensor (56) and an isolation tube (93 94) containing a fill fluid to convey a process fluid related pressure from the isolation diaphragm to the pressure sensor (56). A hydrogen getter (222) material is positioned in contact with the fill fluid between the isolation diaphragm (90) and the pressure sensor (56) to remove hydrogen from the fill fluid.

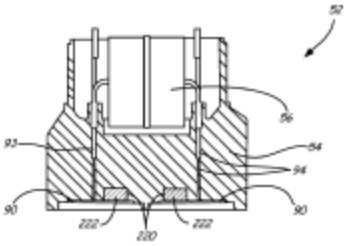

No. of Pages : 22 No. of Claims : 17

(12) PATENT APPLICATION PUBLICATION
(19) INDIA
(22) Date of filing of Application :17/01/2014

(21) Application No.2401/MUM/2013 A
(43) Publication Date : 28/08/2015

(54) Title of the invention : SYSTEM AND METHOD FOR PROVIDING DYNAMIC (REAL-TIME) DISTRIBUTION OF CAPACITY WITH COVERAGE FOR DISTRIBUTED ANTENNA SYSTEM

(51) International classification	:H04B1/00, H04W28/02, H04W16/04	(71)**Name of Applicant :** **1)Sterlite Networks Limited** Address of Applicant :Survey No. 68/1, Rakholi Village, Madhuban dam road, Silvassa Dadra & Nagar Haveli India
(31) Priority Document No	:NA	
(32) Priority Date	:NA	(72)**Name of Inventor :** **1)JAIN, Vijay**
(33) Name of priority country	:NA	
(86) International Application No	:NA	
Filing Date	:NA	
(87) International Publication No	: NA	
(61) Patent of Addition to Application Number	:NA	
Filing Date	:NA	
(62) Divisional to Application Number	:NA	
Filing Date	:NA	

(57) Abstract :
Disclosed is a distributed antenna system (DAS) for providing wireless services to multiple subscribers in multiple coverage sites. The DAS includes at least one base station and host unit, and a plurality of remote terminals located in the multiple coverage sites, wherein the plurality of remote terminals is communicating with the at least one base station and host unit via optical channels. Further, the DAS includes a controller module associated with the plurality of remote terminals. The controller module is configured to dynamically change capacity of one or more of the plurality of remote terminals as per demand of the wireless services from the subscribers. The dynamic changing of the capacity of the one or more of the plurality of remote terminals allows an optimum utilization of the DAS. REFER: Fig. 1

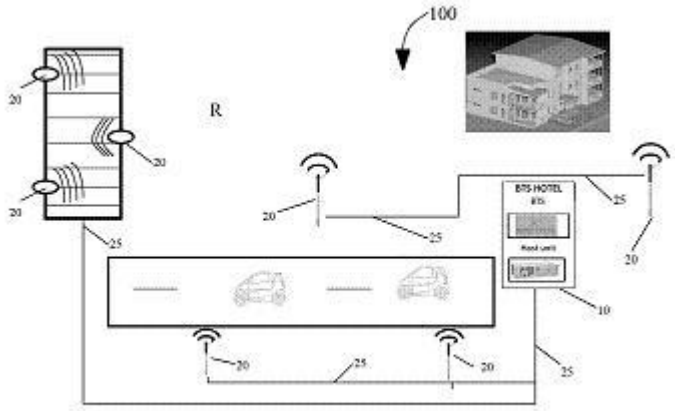

Fig. 1 – Conventional DAS

No. of Pages : 26 No. of Claims : 12

(12) PATENT APPLICATION PUBLICATION
(19) INDIA
(22) Date of filing of Application :08/01/2014

(21) Application No.71/MUM/2014 A
(43) Publication Date : 28/08/2015

(54) Title of the invention : A PROCESS FOR PREPARING ZOLEDRONIC ACID DIMER

(51) International classification	:C07D233/54, C07F9/6506, C07F9/38
(31) Priority Document No	:NA
(32) Priority Date	:NA
(33) Name of priority country	:NA
(86) International Application No	:NA
Filing Date	:NA
(87) International Publication No	: NA
(61) Patent of Addition to Application Number	:NA
Filing Date	:NA
(62) Divisional to Application Number	:NA
Filing Date	:NA

(71)**Name of Applicant :**
1)WOCKHARDT LIMITED
Address of Applicant :D-4, MIDC Area, Chikalthana, Aurangabad Maharashtra India
(72)**Name of Inventor :**
1)Shinde, Pravin
2)Yadav, Ramprasad
3)Merwade, Arvind Yekanathsa
4)Deo, Keshav

(57) Abstract :
The present invention relates to a process for preparing dimer of zoledronic acid, a pharmaceutically acceptable salt thereof, or a hydrate thereof, which is useful as reference marker. Formula II

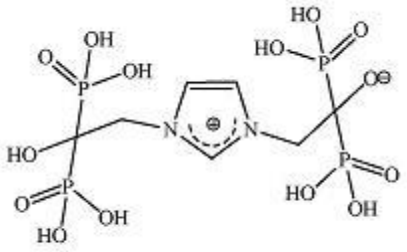

Formula II

No. of Pages : 13 No. of Claims : 8

(12) PATENT APPLICATION PUBLICATION
(21) Application No.77/MUM/2014 A
(19) INDIA
(22) Date of filing of Application :09/01/2014
(43) Publication Date : 28/08/2015

(54) Title of the invention : HUMIC ACID BASED ENTERIC FORMULATIONS

(51) International classification	:A61K31/00, a61k9/00
(31) Priority Document No	:NA
(32) Priority Date	:NA
(33) Name of priority country	:NA
(86) International Application No	:NA
Filing Date	:NA
(87) International Publication No	: NA
(61) Patent of Addition to Application Number	:NA
Filing Date	:NA
(62) Divisional to Application Number	:NA
Filing Date	:NA

(71)**Name of Applicant :**
1)P.E SOCIETY'S MODERN COLLEGE OF PHARMACY
Address of Applicant :SECTOR-21, YAMUNANAGAR, NIGDI, PUNE, MAHARASHTRA, INDIA-411044. Maharashtra India
(72)**Name of Inventor :**
1)DR. SHAIKH KARIMUNNISA SAMEER
2)DR. CHAUDHARI PRAVEEN DIGAMBAR
3)DR. EKBOTE GAJANAN RAMAKANT

(57) Abstract :
The present invention provides humic acid based enteric pharmaceutical formulations comprising drug; humic acid; and at least one pharmaceutically acceptable excipient.

No. of Pages : 24 No. of Claims : 10

(12) PATENT APPLICATION PUBLICATION
(21) Application No.2675/MUMNP/2014 A
(19) INDIA
(22) Date of filing of Application :31/12/2014
(43) Publication Date : 28/08/2015

(54) Title of the invention : COMPOSITIONS COMPRISING PLASMA GROWTH FACTORS FOR USE IN THE TREATMENT OF NEURODEGENERATIVE DISORDERS

(51) International classification :A61P25/28,A61K38/18
(31) Priority Document No :P 201200810
(32) Priority Date :09/08/2012
(33) Name of priority country :Spain
(86) International Application No :PCT/ES2013/000176
Filing Date :19/07/2013
(87) International Publication No :WO 2014/023860
(61) Patent of Addition to Application Number :NA
Filing Date :NA
(62) Divisional to Application Number :NA
Filing Date :NA

(71)**Name of Applicant :**
1)BIOTECHNOLOGY INSTITUTE I MAS D S.L.
Address of Applicant :San Antonio 15 5° E 01005 Vitoria Spain
(72)**Name of Inventor :**
1)ANITUA ALDECOA Eduardo

(57) Abstract :
The aim of the invention is the treatment of neurodegenerative diseases or other applicable pathologies by means of the intranasal application of a composition obtained from at least one blood compound and having growth factors or by means of a therapeutic substance obtained from said composition and the composition itself. It is guaranteed that the composition reaches the central nervous system in an effective way from the point of view of treatment and at the same time in a safe form for the patient.

No. of Pages : 20 No. of Claims : 6

(12) PATENT APPLICATION PUBLICATION
(19) INDIA
(22) Date of filing of Application :31/12/2014

(21) Application No.2676/MUMNP/2014 A
(43) Publication Date : 28/08/2015

(54) Title of the invention : DEVICE FOR THE EXTRACTION STORAGE AND/OR TREATMENT OF BLOOD OR OTHER SUBSTANCES OF HUMAN OR ANIMAL ORIGIN AND FOR THE USE OF BLOOD COMPOUNDS OR OTHER BIOLOGICAL COMPOUNDS

(51) International classification :A61B5/15,A61B5/153,A61B5/154
(31) Priority Document No :P 201200691
(32) Priority Date :03/07/2012
(33) Name of priority country :Spain
(86) International Application No :PCT/ES2013/000156
Filing Date :02/07/2013
(87) International Publication No :WO 2014/006238
(61) Patent of Addition to Application Number :NA
Filing Date :NA
(62) Divisional to Application Number :NA
Filing Date :NA

(71)**Name of Applicant :**
1)BIOTECHNOLOGY INSTITUTE I MAS D S.L.
Address of Applicant :San Antonio 15 5° E 01005 Vitoria Spain
(72)**Name of Inventor :**
1)ANITUA ALDECOA Eduardo

(57) Abstract :
The invention relates to a device (1a 1b 1c 1d; 40) for the extraction storage and/or treatment of blood or other substances of human or animal origin and for the use of blood compounds or other biological compounds said device comprising a body (2; 41) inside which an at least partially detachable plunger (3; 42) can move longitudinally. The body (2; 41) is provided with an interior space (9; 51) that can be connected to the exterior by means of a conduit (6; 50) at a first end (4; 48) of the body (2; 41). The body (2; 41) and the plunger (3; 42) can be interlocked longitudinally in at least one position in order to allow different degrees of vacuum to be created. The device has multiple uses and is particularly versatile.

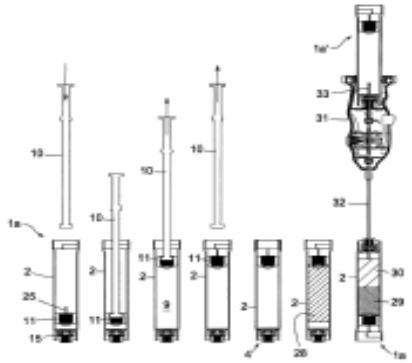

FIG.13A

No. of Pages : 41 No. of Claims : 20

(12) PATENT APPLICATION PUBLICATION
(19) INDIA
(22) Date of filing of Application :31/12/2014
(21) Application No.2677/MUMNP/2014 A
(43) Publication Date : 28/08/2015

(54) Title of the invention : AIR DRIVEN REDUCTANT DELIVERY SYSTEM

(51) International classification :F01N3/20,F01N9/00,F04B13/00
(31) Priority Document No :13/592,091
(32) Priority Date :22/08/2012
(33) Name of priority country :U.S.A.
(86) International Application No :PCT/CN2013/081709
Filing Date :17/08/2013
(87) International Publication No :WO 2014/029301
(61) Patent of Addition to Application Number :NA
Filing Date :NA
(62) Divisional to Application Number :NA
Filing Date :NA

(71)**Name of Applicant :**
1)NANJING KEYI ENVIRONMENTAL PROTECTION SCIENCE AND TECHNOLOGY CO. LTD.
Address of Applicant :No.688 Tianshengqiao Street Yongyang Town Lishui Nanjing Jiangsu 211200 China
(72)**Name of Inventor :**
1)YAN Mi
2)QI Baohua

(57) Abstract :
A dosing system for delivering reductant to an exhaust gas treatment system of an internal combustion engine using air driven hydraulic pumps for closed loop controlling reductant pressure and a two stage PWM control method for controlling dosing rate. Reductant residue in the dosing systems is purged by using compressed air after a dosing process completes and when the air driven hydraulic pumps are positioned inside a reductant tank dedicated heating means for the pumps is not necessary. The air driven hydraulic pumps can also use low pressure compressed air and the closed loop pressure control together with the two stage PWM control allow dosing accuracy insensitive to pressure variations in compressed air. These features enable the dosing system use a variety of compressed air sources including an engine turbo.

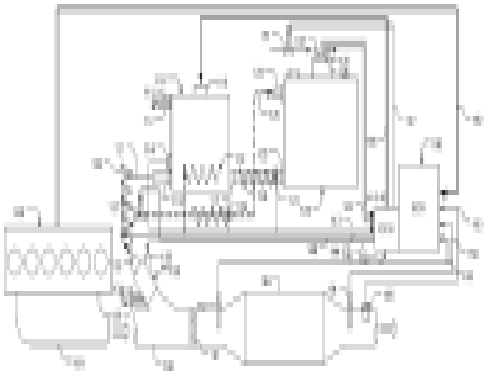

No. of Pages : 33 No. of Claims : 20

(12) PATENT APPLICATION PUBLICATION
(19) INDIA
(22) Date of filing of Application :30/12/2014
(21) Application No.2665/MUMNP/2014 A
(43) Publication Date : 28/08/2015

(54) Title of the invention : FILTERING CONTAINER

(51) International classification :B01D35/30,B01D35/02,B01D29/11
(31) Priority Document No :13/729,849
(32) Priority Date :28/12/2012
(33) Name of priority country :U.S.A.
(86) International Application No :PCT/US2013/075680
Filing Date :17/12/2013
(87) International Publication No :WO 2014/105518
(61) Patent of Addition to Application Number :NA
Filing Date :NA
(62) Divisional to Application Number :NA
Filing Date :NA

(71)**Name of Applicant :**
1)KX TECHNOLOGIES LLC
Address of Applicant :55 Railroad Avenue West Haven CT 06516 U.S.A.
(72)**Name of Inventor :**
1)LOMBARDO Andrew W.
2)HUDA Stephen P.
3)KAHN Malcolm R.

(57) Abstract :
A collapsible bag or compressible bottle container for accepting holding and filtering fluid. Fluid is filtered upon entry to the container or filtered upon egress. The filter media resides either in a removable cap or in a second fluid tight compartment attached to and in fluid communication with the container body. A one way valve with unique one time connection to a fluid source mitigates potential contamination from container overuse. A second collapsible layer is used in conjunction with the collapsible bag to accept compressed air that provides rigidity for the container body.

No. of Pages : 38 No. of Claims : 37

(12) PATENT APPLICATION PUBLICATION
(19) INDIA
(22) Date of filing of Application :30/12/2014
(21) Application No.2666/MUMNP/2014 A
(43) Publication Date : 28/08/2015

(54) Title of the invention : PORTABLE DEVICE FOR STORING AND RETRIEVING ITEMS OF APPAREL

(51) International classification :A45C9/00,A47B61/06
(31) Priority Document No :NA
(32) Priority Date :NA
(33) Name of priority country :NA
(86) International Application No :PCT/IB2012/003130
Filing Date :26/07/2012
(87) International Publication No :WO 2013/016572
(61) Patent of Addition to Application Number :NA
Filing Date :NA
(62) Divisional to Application Number :NA
Filing Date :NA

(71)**Name of Applicant :**
1)RICHARDS Stephen B.
Address of Applicant :5007 Gretna Green Dr. Houston TX 77084 U.S.A.
(72)**Name of Inventor :**
1)RICHARDS Stephen B.

(57) Abstract :
The portable device for storing and retrieving items of apparel reduces the burden of packing and unpacking items. The portable device comprises a housing made of a first housing member and a second housing member (20 30 90) that is attached to at least one extension member (10 28). The extension member can hold a plurality of apparel items (12). The portable device can be opened to view all of the well organized items or the luggage can be closed move the items as desired by user. This can enable a user to easily travel without the burden of packing and unpacking because the items only leave the luggage when the items are in use.

No. of Pages : 18 No. of Claims : 6

(12) PATENT APPLICATION PUBLICATION
(19) INDIA
(22) Date of filing of Application :30/12/2014
(21) Application No.2667/MUMNP/2014 A
(43) Publication Date : 28/08/2015

(54) Title of the invention : PACKAGE OF STEREOLITHOGRAPHY RESIN MIXING DEVICE SUITED TO BE USED WITH SAID PACKAGE STEREOLITHOGRAPHY SYSTEM AND METHOD FOR MIXING A STEREOLITHOGRAPHY RESIN CONTAINED IN SAID PACKAGE

(51) International classification :B01F13/08,B01F15/00,B01F15/06
(31) Priority Document No :VI2012A000188
(32) Priority Date :30/07/2012
(33) Name of priority country :Italy
(86) International Application No :PCT/IB2013/001626
Filing Date :25/07/2013
(87) International Publication No :WO 2014/020401
(61) Patent of Addition to Application Number :NA
Filing Date :NA
(62) Divisional to Application Number :NA
Filing Date :NA

(71)**Name of Applicant :**
1)DWS S.R.L.
Address of Applicant :via Lago Di Levico 3 I 36010 Zane (VI) Italy
(72)**Name of Inventor :**
1)ZENERE Sergio

(57) Abstract :
The invention is a package (1) for stereolithography comprising a container (2) filled with stereolithography resin (3) provided with an access opening (4) and a mixer element (5) arranged in a removable manner in the container (2) and provided with at least one magnet (6).

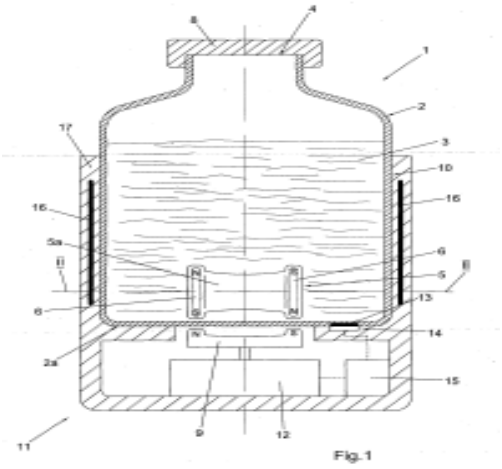

Fig.1

No. of Pages : 20 No. of Claims : 15

(12) PATENT APPLICATION PUBLICATION
(19) INDIA
(22) Date of filing of Application :30/12/2014
(21) Application No.2668/MUMNP/2014 A
(43) Publication Date : 28/08/2015

(54) Title of the invention : CALIBRATION SYSTEMS AND METHODS FOR SENSOR PAYLOADS

(51) International classification :F41G3/22,F41G3/32,G06K9/32
(31) Priority Document No :220815
(32) Priority Date :08/07/2012
(33) Name of priority country :Israel
(86) International Application No :PCT/IL2013/050299
Filing Date :02/04/2013
(87) International Publication No :WO 2014/009944
(61) Patent of Addition to Application Number :NA
Filing Date :NA
(62) Divisional to Application Number :NA
Filing Date :NA

(71)**Name of Applicant :**
1)ISRAEL AEROSPACE INDUSTRIES LTD.
Address of Applicant :Ben Gurion International Airport 70100 Lod Israel
(72)**Name of Inventor :**
1)SCHWARTZ Roni
2)RAICHMAN Nadav
3)BUBIS Roy

(57) Abstract :
The present disclosure provides notably a calibration system suitable for in flight calibration of a sensor payload. The calibration system comprises an emitting object being configured for emitting in a first emitting spectral band and in a second emitting spectral band a predetermined pattern comprising a plurality of lighted areas on a homogeneous background; and a collimation optical unit configured for setting the emitting object at infinity.

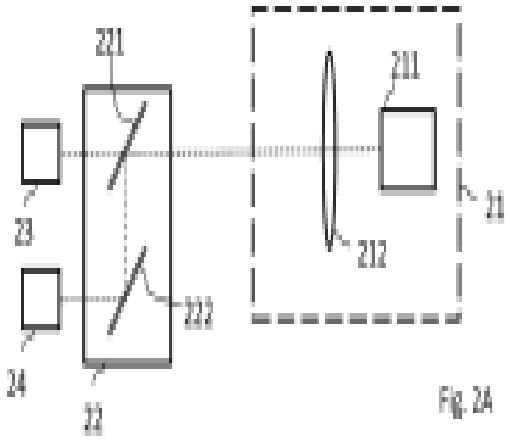

Fig. 2A

No. of Pages : 26 No. of Claims : 23

(12) PATENT APPLICATION PUBLICATION
(19) INDIA
(22) Date of filing of Application :30/12/2014
(21) Application No.2669/MUMNP/2014 A
(43) Publication Date : 28/08/2015

(54) Title of the invention : SLIDING WINDOW WITH IMPROVED AIR TIGHTNESS

(51) International classification :E06B7/16,E06B3/46,E05D15/06
(31) Priority Document No :10-2012-0088669
(32) Priority Date :14/08/2012
(33) Name of priority country :Republic of Korea
(86) International Application No :PCT/KR2013/006835
Filing Date :30/07/2013
(87) International Publication No :WO 2014/027770
(61) Patent of Addition to Application Number :NA
Filing Date :NA
(62) Divisional to Application Number :NA
Filing Date :NA

(71)**Name of Applicant :**
1)LG HAUSYS LTD.
Address of Applicant :20 Yoido dong Youngdungpo gu Seoul 150 721 Republic of Korea
(72)**Name of Inventor :**
1)LEE Mi Jin
2)KIM Jong Tae

(57) Abstract :
The present invention relates to a sliding window 100 with improved air tightness including a window frame 110 having a plurality of rails 111 disposed along the longitudinal direction thereof at least one pair of window sashes 120 slidingly coupled to the rails 111 and wheel assemblies 200 rotatably mounted on facing surfaces 123 of the window sashes 120 laid on each other when the window sashes 120 are closed whereby at the moment when the wheel assemblies 200 are rolling contacted with the facing surfaces 123 of the window sashes 120 upon the closing manipulation of the window sashes 120 the window sashes 120 are horizontally moved in the direction perpendicular to the sliding direction thereof.

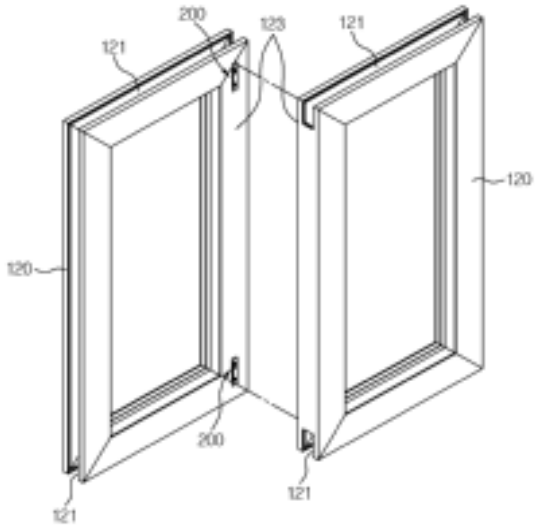

No. of Pages : 14 No. of Claims : 7

(12) PATENT APPLICATION PUBLICATION
(19) INDIA
(22) Date of filing of Application :10/01/2014

(21) Application No.91/MUM/2014 A
(43) Publication Date : 28/08/2015

(54) Title of the invention : ELECTRONIC BABY CRADLE

(51) International classification	:A47D13/10, A47D9/02
(31) Priority Document No	:NA
(32) Priority Date	:NA
(33) Name of priority country	:NA
(86) International Application No	:NA
Filing Date	:NA
(87) International Publication No	: NA
(61) Patent of Addition to Application Number	:NA
Filing Date	:NA
(62) Divisional to Application Number	:NA
Filing Date	:NA

(71)**Name of Applicant :**
1)RAJARAMBAPU INSTITUTE OF TECHNOLOGY
Address of Applicant :RAJARAMNAGAR, ISLAMPUR, SANGLI-415414, MAHARASHTRA, INDIA. Maharashtra India
(72)**Name of Inventor :**
1)PATIL, MAHADEV SATAPPA

(57) Abstract :
An electronic baby cradle is disclosed and includes a cradle, an actuating mechanism, a power source, a proximity sensor, a voice recorder and play circuit device, an audio sensor, a humidity sensor, a posture sensor, a signal amplifier, a controller device, a camera and a display unit. The proximity sensor detects the presence of the baby in the cradle. The voice recorder and play circuit device produces audible voice when the baby is crying. The controller device either actuates the actuating mechanism or generates an alarm. The humidity sensor signals for generating the alarm. The posture sensor signals for generating the alarm while the baby is in at least one of a sitting posture and a standing posture. The audio sensor signals for actuation of the actuating mechanism. The camera enables capturing visuals of the baby for enabling remote monitoring of the baby through the display unit. Fig.1

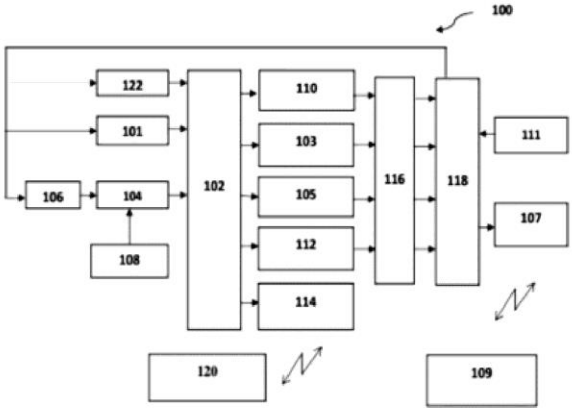

FIGURE 1

No. of Pages : 17 No. of Claims : 7

(12) PATENT APPLICATION PUBLICATION
(19) INDIA
(22) Date of filing of Application :03/05/2013
(21) Application No.1992/CHE/2013 A
(43) Publication Date : 28/08/2015

(54) Title of the invention : METHOD OF MANAGING MOBILITY AND ACCESS IN A MULTIPLE OPERATOR CORE NETWORK

(51) International classification :H04W48/00
(31) Priority Document No :NA
(32) Priority Date :NA
(33) Name of priority country :NA
(86) International Application No :NA
Filing Date :NA
(87) International Publication No : NA
(61) Patent of Addition to Application Number :NA
Filing Date :NA
(62) Divisional to Application Number :NA
Filing Date :NA

(71)**Name of Applicant :**
1)SAMSUNG INDIA SOFTWARE OPERATIONS PRIVATE LIMITED
Address of Applicant :BAGMANE LAKEVIEW, BLOCK 'B', NO. 66/1, BAGMANE TECH PARK, C V RAMAN NAGAR, BYRASANDRA, BANGALORE - 560 093 Karnataka India
(72)**Name of Inventor :**
1)NAGARAJAN, ARUNKUMAR
2)MANEPALLI, VENKATESWARA RAO

(57) Abstract :
The various embodiments herein disclose user equipment and a method of managing mobility and access in a multiple operator core network (MOCN) environment. The method comprising steps of selecting, by a user equipment (UE), at least one public land mobile network (PLMN) from a plurality of PLMNs present in a MOCN cell, receiving a system information block (SIB) message transmitted by the MOCN cell, and performing one or more operations using information received from the SIB message thereby handling an unwanted scenario in the MOCN cell. The SIB message herein comprises information for each PLMN connected to the MOCN cell. The unwanted scenario comprises at least one of unwanted frequency scanning, unwanted neighbor cell measurements, unwanted cell barring, unwanted frequency barring, overloading at one of a PLMN and the radio access network (RAN). Figure 2

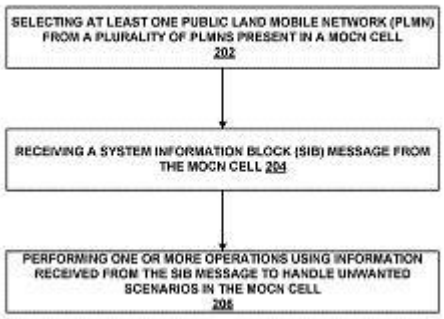

No. of Pages : 30 No. of Claims : 10

(12) PATENT APPLICATION PUBLICATION
(21) Application No.3865/CHE/2012 A
(19) INDIA
(22) Date of filing of Application :17/09/2012
(43) Publication Date : 28/08/2015

(54) Title of the invention : A METHOD AND A SYSTEM FOR PROVIDING SAFETY IN BRAKE SHOE ASSEMBLY USED IN FOUNDATION BRAKES

(51) International classification :F16D
(31) Priority Document No :NA
(32) Priority Date :NA
(33) Name of priority country :NA
(86) International Application No :NA
Filing Date :NA
(87) International Publication No : NA
(61) Patent of Addition to Application Number :NA
Filing Date :NA
(62) Divisional to Application Number :NA
Filing Date :NA

(71)**Name of Applicant :**
1)MERITOR HVS (INDIA) LIMITED
Address of Applicant :Plot No. 36 Hootagalli Industrial Area Off Hunsur Road Mysore 570 018 India Karnataka India
(72)**Name of Inventor :**
1)BHEEMA RAO Jajur Gopalakrishna
2)GANIGER Siddalingappa
3)GIRIDHAR NaveenKumar
4)HEGDE Rajendra Ramachandra

(57) Abstract :
The present invention provides a method and system for providing safety in brake shoe assembly used in foundation brakes. The system comprises a web brake shoe(s), a shoe return spring for holding the web brake shoe(s), a cam head washer for right fitment of the spring, where the shoe return spring comprises a hook profile for holding the center bar position of the spring by locating said hook(s) in the hole/slot of said web brake shoe.

No. of Pages : 17 No. of Claims : 10

(12) PATENT APPLICATION PUBLICATION
(21) Application No.4166/CHE/2013 A
(19) INDIA
(22) Date of filing of Application :17/09/2013
(43) Publication Date : 28/08/2015

(54) Title of the invention : SYSTEMS AND METHODS FOR ADAPTIVE APPLICATION AND PRIVACY PRESERVING INTERNET OF THINGS

(51) International classification	:H01J23/00	(71)**Name of Applicant :**
(31) Priority Document No	:NA	**1)AMRITA VISHWA VIDYAPEETHAM**
(32) Priority Date	:NA	Address of Applicant :AMRITANAGAR P.O., COIMBATORE 641
(33) Name of priority country	:NA	112 Tamil Nadu India
(86) International Application No	:NA	(72)**Name of Inventor :**
Filing Date	:NA	**1)POROOR, JAYARAJ**
(87) International Publication No	: NA	
(61) Patent of Addition to Application Number	:NA	
Filing Date	:NA	
(62) Divisional to Application Number	:NA	
Filing Date	:NA	

(57) Abstract :
The present invention provides system and method for adaptive application and privacy preserving internet of things. The system 5 comprises of at least one configured IoT device(s) (A) for receiving, processing, filtering, storing and transferring limited information to at least one receiving IoT device(s) (R1, R2, ¦, Rn), at least one inputting IoT device(s) (ID1, ID2, ¦. IDn) for transferring information to said IoT device(s) (A), at least one memory unit (M) for storing processed 10 information in said configured IoT device (A), at least one communication interface (C) for communication between IoT device(s), at least one receiving IoT device(s) (R1, R2, ¦. Rn) to receive processed information from said configured IoT device (A) as per the information flow policies (P) thereby limiting the type and amount of private information that can be 15 supplied or leaked to the public from one IoT device irrespective of the application running on the IoT device.

No. of Pages : 29 No. of Claims : 5

(12) PATENT APPLICATION PUBLICATION
(21) Application No.4823/CHE/2013 A
(19) INDIA
(22) Date of filing of Application :25/10/2013
(43) Publication Date : 28/08/2015

(54) Title of the invention : A AUTOMATIC CASHEW-NUT DESHELLING MACHINE

(51) International classification :A23N5/00
(31) Priority Document No :NA
(32) Priority Date :NA
(33) Name of priority country :NA
(86) International Application No :NA
Filing Date :NA
(87) International Publication No : NA
(61) Patent of Addition to Application Number :NA
Filing Date :NA
(62) Divisional to Application Number :NA
Filing Date :NA

(71)**Name of Applicant :**
1)MAHAJAN PRAKASH
Address of Applicant :S.NO. 78, SHINDE NAGAR ROAD, NIPANI - 591 237 Karnataka India
(72)**Name of Inventor :**
1)MAHAJAN PRAKASH

(57) Abstract :
An automatic de-shelling machine includes a frame, a picking and dispensing sub-assembly, a queuing and release sub-assembly and an orienting and cutting sub-assembly. The picking and dispensing sub-assembly picks and dispenses shelled articles one by one. The queuing and release sub-assembly receives and orients the shelled article in a desired, pre-determined orientation before releasing. The orienting and cutting sub-assembly ensures that the shelled article is in the desired, pre-determined orientation during shearing so that depth of cut on a pre-determined side of the shelled article is controlled. The orienting and cutting sub-assembly includes a rotating pulley arrangement, a first shearing blade and a spring loaded second shearing blade. The rotating pulley arrangement receives and supports shelled article along periphery thereof and moves shelled article radially as shelled article moves along periphery of the rotating pulley arrangement to topple shelled article for facilitating orienting of shelled article to desired, pre-determined orientation.

No. of Pages : 60 No. of Claims : 13

(12) PATENT APPLICATION PUBLICATION
(19) INDIA
(22) Date of filing of Application :11/11/2013
(21) Application No.5102/CHE/2013 A
(43) Publication Date : 28/08/2015

(54) Title of the invention : COLUMN PIPE LOCKING SYSTEM

(51) International classification :F16L
(31) Priority Document No :NA
(32) Priority Date :NA
(33) Name of priority country :NA
(86) International Application No :NA
Filing Date :NA
(87) International Publication No : NA
(61) Patent of Addition to Application Number :NA
Filing Date :NA
(62) Divisional to Application Number :NA
Filing Date :NA

(71)**Name of Applicant :**
1)C.R.I. PUMPS PRIVATE LIMITED
Address of Applicant :C.R.I. Pumps Private Limited 7/46-1, Keeranatham Road, Saravanampatty, Coimbatore-641035, Karnataka India
(72)**Name of Inventor :**
1)NAGARAJA, Kanchkaranahalli Math

(57) Abstract :
Described herein are systems for locking one or more threaded pipes to a coupler (102). The coupler (102) includes at least one end (108) for being permanently thread-connected to a threaded pipe (104). The at least one end (108) of the coupler (102) includes a groove portion (112) formed between threaded grooves of the at least one end (108), and a through-hole (114) drilled in the groove portion (112) on circumference of the at least one end (108) of the coupler (102). In accordance with the present subject matter, the coupler (102) and the threaded pipe (104) are thread-connected through a polymer bonded thread sink lock formed by injecting a semi-liquid polymer from the through-hole (114) in the groove portion (112).

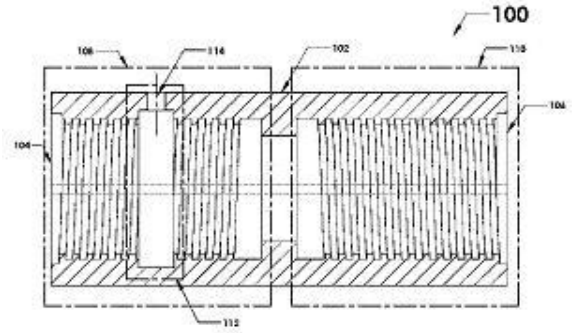

FIG. 1a

No. of Pages : 16 No. of Claims : 10

(12) PATENT APPLICATION PUBLICATION
(21) Application No.5235/CHE/2013 A
(19) INDIA
(22) Date of filing of Application :14/11/2013
(43) Publication Date : 28/08/2015

(54) Title of the invention : ZANGO

(51) International classification :G06Q30/00
(31) Priority Document No :NA
(32) Priority Date :NA
(33) Name of priority country :NA
(86) International Application No :NA
Filing Date :NA
(87) International Publication No : NA
(61) Patent of Addition to Application Number :NA
Filing Date :NA
(62) Divisional to Application Number :NA
Filing Date :NA

(71)**Name of Applicant :**
1)SAVEETHA SCHOOL OF ENGINEERING SAVEETHA UNIVERSITY
Address of Applicant :THANDALAM, CHENNAI - 602 105 Tamil Nadu India
(72)**Name of Inventor :**
1)K. AMARESWAR
2)M. NARAYANAN
3)C. RAJAGOPAL

(57) Abstract :
a) The main theme is to create a online shopping application with virtual source.These app will give a clear idea about the item what we want to buy.In this application the textiles will play a major role because in textiles we have so many types of fashion.In day-to-day our life we give more importance to our fashion and style. For that we use to buy most latest things only.which will give brand to our fashion.In mens wear we see so many ultra fashions in our life daily.Every day the new stock or models are available.For all human beings are interested on the fashion or style because it will represent our into special model and became as a role model to so other people who are like our fashion. We can a buy a item buy sitting infront of computer are there so many applications like olx,quickr,ebay etc.,But my app we provide a virtual sources to user it means it represent u in the screen and check the item like dress is suitable or comportable or looking good to you.Because you can check that item by virtually. This app will give a so many ultra versions than any other.It will gives a user into clear idea about that item.These app is used both in mobiles phones and computer also.These application will work on both windows and android also. The main thing to work this app is front cam which is good in zoom because this app is work on virtual source.So that front cam for this application is compulsory to work.We can buy a item from anyplace to anywhere.lt is a app, I think which is not created in our india. This is app which will most technological source of Java and virtual source.The main wishof these app is to create a online shopping application with virtual source. This is a new trade mark to create a trade mark in online shopping application than olx,quickr,ebay,flipkraft etc.,The app name is zango because it will give a clear information about what we want or need

No. of Pages : 7 No. of Claims : 3

(12) PATENT APPLICATION PUBLICATION
(21) Application No.7371/CHENP/2012 A
(19) INDIA
(22) Date of filing of Application :24/08/2012
(43) Publication Date : 28/08/2015

(54) Title of the invention : WEAR-PROTECTIVE SLEEVE

(51) International classification :F16J15/32
(31) Priority Document No :10 2010 007 010.6
(32) Priority Date :05/02/2010
(33) Name of priority country :Germany
(86) International Application No :PCT/EP2011/050207
Filing Date :10/01/2011
(87) International Publication No :WO 2011/095371
(61) Patent of Addition to Application Number :NA
Filing Date :NA
(62) Divisional to Application Number :NA
Filing Date :NA

(71)**Name of Applicant :**
1)AKTIEBOLAGET SKF
Address of Applicant :S 415 50 Gteborg Sweden
(72)**Name of Inventor :**
1)KURTH J¼rgen
2)CRAWFORD John

(57) Abstract :
The invention relates to a wear bushing (1) having an axially extending sleeve section (3) having a cylindrical sealing guide surface (5) a flange section (9) extending radially away from the sleeve section (3) and a target break section (11 11a) connecting the sleeve section (3) to the flange section (9) to make separation of the flange section (9) from the sleeve section (3) easier furthermore having a tearing apparatus (13) on the flange section (9) to make radial tearing of the flange section (9) to the target break section (11 11a) easier.

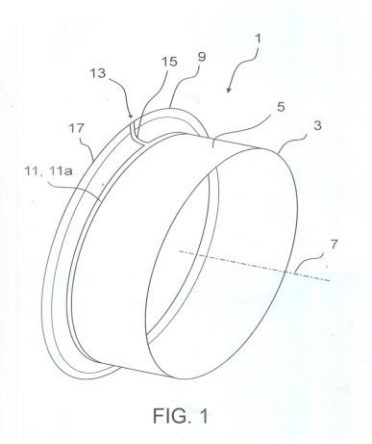

FIG. 1

No. of Pages : 17 No. of Claims : 10

(12) PATENT APPLICATION PUBLICATION
(19) INDIA
(22) Date of filing of Application :18/02/2014

(21) Application No.757/CHE/2014 A
(43) Publication Date : 28/08/2015

(54) Title of the invention : AN APPARATUS AND METHOD FOR CHARGING THE BATTERIES

(51) International classification :H01M10/00
(31) Priority Document No :NA
(32) Priority Date :NA
(33) Name of priority country :NA
(86) International Application No :NA
Filing Date :NA
(87) International Publication No : NA
(61) Patent of Addition to Application Number :NA
Filing Date :NA
(62) Divisional to Application Number :NA
Filing Date :NA

(71)**Name of Applicant :**
1)INVENIRE
Address of Applicant :2/245, II STREET, TEACHERS COLONY, V. K. ROAD, CHERANMA NAGAR (PO), COIMBATORE Tamil Nadu India
(72)**Name of Inventor :**
1)S.L. RAMA KRISHNAN

(57) Abstract :
ABSTRACT This invention relates to a system and apparatus for discharging of batteries. In particular, the present invention is directed to discharging of batteries when it is installed in an electric vehicle to control the discharge rate of batteries and supply the power to drive motor to enhance the mileage of Electric vehicles. The system and apparatus for discharging the batteries and supply power to the drive motor of electric vehicle comprises a set of batteries, a discharge control device , an Inverter, a transformer, a control unit and a driving means. FIG-2

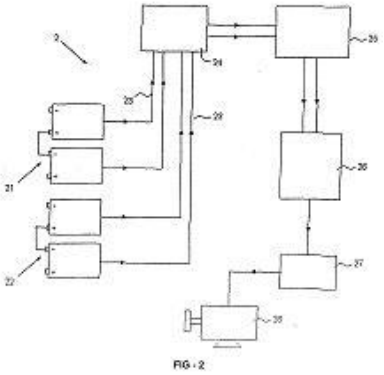

FIG - 2

No. of Pages : 12 No. of Claims : 7

(12) PATENT APPLICATION PUBLICATION
(21) Application No.1394/CHENP/2014 A
(19) INDIA
(22) Date of filing of Application :21/02/2014
(43) Publication Date : 28/08/2015

(54) Title of the invention : METHOD AND APPARATUS FOR PRE CODING PHYSICAL DOWNLINK CONTROL CHANNEL REFERENCE SIGNAL AND BLIND DECODING

(51) International classification :H04W72/04
(31) Priority Document No :201110216801.8
(32) Priority Date :29/07/2011
(33) Name of priority country :China
(86) International Application No :PCT/IB2012/001661
Filing Date :23/07/2012
(87) International Publication No :WO 2013/017946
(61) Patent of Addition to Application Number :NA
Filing Date :NA
(62) Divisional to Application Number :NA
Filing Date :NA

(71)**Name of Applicant :**
1)ALCATEL LUCENT
Address of Applicant :3 avenue Octave Grard F 75007 Paris France
(72)**Name of Inventor :**
1)ZHANG Xiaobo
2)CHEN Fang Chen

(57) Abstract :
The invention proposes a method of and apparatus for a pre coded physical downlink control channel reference signal and blind decoding in a design of the reference signal the demodulation reference signal is used for demodulating physical downlink control channel signaling wherein the physical downlink control channel signaling is embedded in. a physical downlink shared channel an the demodulation reference signal is included in a control channel element in a method tor a user equipment to perform blind decoding the user equipment obtains blind decoding indication information.from a base station the blind decoding indication information including an indication of a search space in which the user equipment performs the blind decoding wherein the search space includes a control channel element of a traditional physical downlink control channel and further includes a control channel element of a pre coded physical downlink control channel; and performs blind decoding for the number of searches indicated by the blind decoding indication information in the search space indicated by the blind decoding indication information according to the blind decoding indication information.

No. of Pages : 23 No. of Claims : 15

(12) PATENT APPLICATION PUBLICATION
(21) Application No.5393/CHE/2013 A
(19) INDIA
(22) Date of filing of Application :22/11/2013
(43) Publication Date : 28/08/2015

(54) Title of the invention : METHOD AND SYSTEM FOR MINIMUM COST FLOW BASED OPTIMAL SCHEDULING AND PRODUCTION PLANNING

(51) International classification :G06Q10/00
(31) Priority Document No :NA
(32) Priority Date :NA
(33) Name of priority country :NA
(86) International Application No :NA
Filing Date :NA
(87) International Publication No : NA
(61) Patent of Addition to Application Number :NA
Filing Date :NA
(62) Divisional to Application Number :NA
Filing Date :NA

(71)**Name of Applicant :**
1)ABB RESEARCH LTD.
Address of Applicant :AFFOLTERNSTRASSE 44, CH - 8050, ZURICH Switzerland
(72)**Name of Inventor :**
1)NARESHKUMAR NANDOLA
2)TARUN MATHUR
3)TONI KYMALAINEN
4)JUHA MANTYSAARI

(57) Abstract :
A computer implemented method and system for minimum cost flow based optimal scheduling and planning is provided that includes proving a P&ID of a plant to a front end module that contains a library of source, sink and storage nodes and flow connectors to configure the P&ID network using a graphical user interface as a graphical or tree representation based on the optimization task or problem. The P&ID network thus created generates a corresponding mathematical programming script at the back end that is received by an optimization solver to generate an optimal schedule that is displayed on the graphical user interface.

No. of Pages : 21 No. of Claims : 10

(12) PATENT APPLICATION PUBLICATION
(21) Application No.5396/CHE/2013 A
(19) INDIA
(22) Date of filing of Application :22/11/2013
(43) Publication Date : 28/08/2015

(54) Title of the invention : AN IMPROVED SOLAR PANEL MODULE MOUNTING STRUCTURE FOR SEASONAL TILTING BY USE OF ROD TYPE FOUNDATION

(51) International classification :F24J2/00
(31) Priority Document No :NA
(32) Priority Date :NA
(33) Name of priority country :NA
(86) International Application No :NA
Filing Date :NA
(87) International Publication No : NA
(61) Patent of Addition to Application Number :NA
Filing Date :NA
(62) Divisional to Application Number :NA
Filing Date :NA

(71)**Name of Applicant :**
1)POPURI HIMAMSU
Address of Applicant :Eeva IP & IT Services Pvt Ltd, Plot No 201, H-No: 6-3-347/22/8, Dwarakapuri Colony, Panjagutta, Hyderabad. Andhra Pradesh India
2)KROTHAPALLI HARISH CHOWDARY
3)DASARI SRIRAM
4)PACHIPULUSU NIKHIL BABU
5)MAGANTI SRINIVAS RAO
(72)**Name of Inventor :**
1)POPURI HIMAMSU
2)PACHIPULUSU NIKHIL BABU
3)BOGGAVARAPU CHOWDARY CHARAN
4)MEDIPALLY HARI KRISHNA

(57) Abstract :
An improved solar panel module mounting structure and a method of installation for seasonal tilting by use of rod type foundation in rocky terrains is disclosed. The modules are mounted on purlins through bolting or clamping as per the requirement and type of the module. The purlins are supported on rafters using L shaped plates. The rafters supported on columns. The columns offset reduce the moment on the members and makes them economical. The long column post is supported by a bracing on the rear side. This bracing is supported on other end on a short column. The front bracing that connects the rafter to the column has slots provided at appropriate distances that can accommodate different tilt angles.

No. of Pages : 16 No. of Claims : 9

(12) PATENT APPLICATION PUBLICATION
(21) Application No.760/CHE/2014 A
(19) INDIA
(22) Date of filing of Application :18/02/2014
(43) Publication Date : 28/08/2015

(54) Title of the invention : APPARATUS FOR OPERATING A LOW PRESSURE FUEL PUMP

(51) International classification :F02N
(31) Priority Document No :NA
(32) Priority Date :NA
(33) Name of priority country :NA
(86) International Application No :NA
Filing Date :NA
(87) International Publication No : NA
(61) Patent of Addition to Application Number :NA
Filing Date :NA
(62) Divisional to Application Number :NA
Filing Date :NA

(71)**Name of Applicant :**
1)Bosch Limited
Address of Applicant :Post Box No 3000, Hosur Road, Adugodi, Bangalore 560030, Karnataka, INDIA Karnataka India
2)Robert Bosch GmbH
(72)**Name of Inventor :**
1)SHIVARAMEGOWDA Sanjay

(57) Abstract :
An apparatus for operating a low pressure pump (10) of an automobile is disclosed. The apparatus comprises an engine control unit (25) coupled to a low pressure pump (20) for operating the low pressure pump (20) characterized in that the engine control unit (25) operates the low pressure pump (20) at a first voltage prior to an engine cranking phase. Reference figure: Figure 1

No. of Pages : 10 No. of Claims : 7

(12) PATENT APPLICATION PUBLICATION
(21) Application No.1178/CHE/2013 A
(19) INDIA
(22) Date of filing of Application :19/03/2013
(43) Publication Date : 28/08/2015

(54) Title of the invention : HERBAL FORMULATION FOR TREATMENT OF HAIR FALL

(51) International classification :A61K36/00
(31) Priority Document No :NA
(32) Priority Date :NA
(33) Name of priority country :NA
(86) International Application No :NA
Filing Date :NA
(87) International Publication No : NA
(61) Patent of Addition to Application Number :NA
Filing Date :NA
(62) Divisional to Application Number :NA
Filing Date :NA

(71)**Name of Applicant :**
1)R. MEENA
Address of Applicant :NETAJI STREET, RAJA RAJA THEVAR ADVOCATE HOUSE, FIRST FLOOR, CHEKKANOORNI - 625 514, MADURAI DISTRICT Tamil Nadu India
(72)**Name of Inventor :**
1)R. MEENA

(57) Abstract :
A herbal formulation for the treatm ent of hair fall comprising: an extract obtained from an extract obtained from fruits of Emblica officinalis in a concentration of 25% to 35%; leaves of Aloe vera in a concentration of 5% to 10%; flowers and leaves of Hibiscus rosa sinensis in a concentration of 5% to 10%; flowers of Cassia auriculata in a concentration of 5% to 10%; stem of Eclipta prostrata in a concentration of 5% to 10%; leaves of Lawsonia inermis in a concentration of 5% to 10%; leaves of Phyllanthus niruri in a concentration of 5% to 10%; leaves of Argemone mexicana in a concentration of 5% to 10%; and seeds of Trigonella foenum in a concentration of 1% to 5%.

No. of Pages : 6 No. of Claims : 8

(12) PATENT APPLICATION PUBLICATION
(19) INDIA
(22) Date of filing of Application :19/02/2014
(21) Application No.1311/CHENP/2014 A
(43) Publication Date : 28/08/2015

(54) Title of the invention : MICRO FLUID DEVICE

(51) International classification :B01J19/00,C12M1/00,C12M1/38
(31) Priority Document No :2011180318
(32) Priority Date :22/08/2011
(33) Name of priority country :Japan
(86) International Application No :PCT/JP2012/005236
Filing Date :21/08/2012
(87) International Publication No :WO 2013/027393
(61) Patent of Addition to Application Number :NA
Filing Date :NA
(62) Divisional to Application Number :NA
Filing Date :NA

(71)**Name of Applicant :**
1)PANASONIC CORPORATION
Address of Applicant :1006 Oaza Kadoma Kadoma shi Osaka 5718501 Japan
(72)**Name of Inventor :**
1)TACHIBANA Hiroaki
2)TSUJI Koji
3)SAIJO Takashi
4)TAMIYA Eiichi
5)SAITO Masato

(57) Abstract :
To provide a microfluidic device which does not apply a meandering reaction channel and thus can be reduced in size, the microfluidic device comprising a reaction channel is characterized in that a plurality of thermal cycle regions which respectively comprise at least two thermal regions with different temperatures are repeatedly provided and the reaction channel passes through the plurality of thermal cycle regions.

No. of Pages : 36 No. of Claims : 10

(12) PATENT APPLICATION PUBLICATION
(19) INDIA
(22) Date of filing of Application :18/02/2014
(21) Application No.759/CHE/2014 A
(43) Publication Date : 28/08/2015

(54) Title of the invention : ULTRA COMPACT COPLANAR STRIP ANTENNA

(51) International classification :H01Q
(31) Priority Document No :NA
(32) Priority Date :NA
(33) Name of priority country :NA
(86) International Application No :NA
Filing Date :NA
(87) International Publication No : NA
(61) Patent of Addition to Application Number :NA
Filing Date :NA
(62) Divisional to Application Number :NA
Filing Date :NA

(71)**Name of Applicant :**
1)Cochin University of Science and Technology
Address of Applicant :Cochin, South Kalamassery, Kerela - 682022, India Kerala India
(72)**Name of Inventor :**
1)P. MOHANAN

(57) Abstract :
The present invention provides an ultra compact coplanar strip antenna comprising dielectric substrate, a rectangular ground strip mounted on said dielectric substrate and a rectangular spiral conductor strip mounted on said dielectric substrate and spaced apart from the rectangular ground conductor strip by a constant gap. The rectangular ground conductor strip and spiral conductor strip are mounted on the same face of the substrate. Due to the ultra compactness of the antenna along with excellent radiation and reflection characteristics, the antenna may be used in various applications such as RFID, wireless LAN, wireless sensors, mobile communication devices, and chip antenna technology. Figure 1

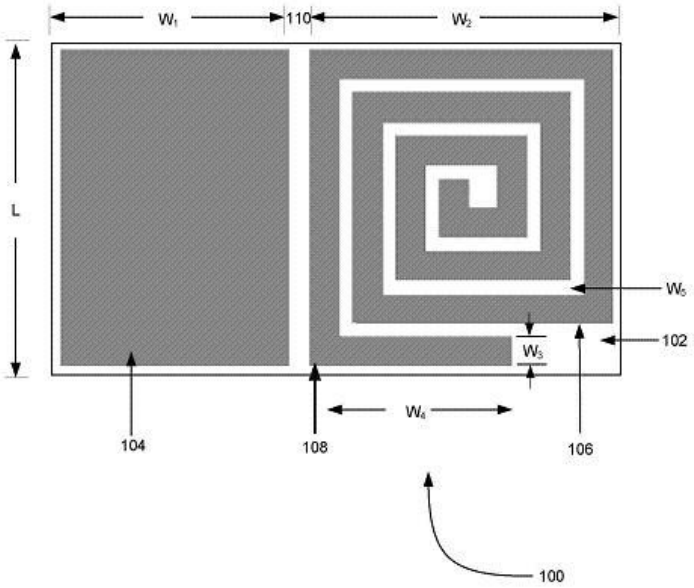

Figure 1

No. of Pages : 16 No. of Claims : 7

(12) PATENT APPLICATION PUBLICATION
(21) Application No.780/CHE/2014 A
(19) INDIA
(22) Date of filing of Application :18/02/2014
(43) Publication Date : 28/08/2015

(54) Title of the invention : MULTI PURPOSE SOLID BODY APPARATUS

(51) International classification :B23B
(31) Priority Document No :NA
(32) Priority Date :NA
(33) Name of priority country :NA
(86) International Application No :NA
Filing Date :NA
(87) International Publication No : NA
(61) Patent of Addition to Application Number :NA
Filing Date :NA
(62) Divisional to Application Number :NA
Filing Date :NA

(71)**Name of Applicant :**
1)RAMESH BABU.R
Address of Applicant :no:13.Sathyanarayana temple road ,1st floor precicion foto type services, Near Gupta layout, Halasuru,Bangalore-560008,Karnataka,India Karnataka India
(72)**Name of Inventor :**
1)RAMESH BABU.R

(57) Abstract :
ABSTRACT This Invention relates to Multi purpose solid body apparatus which comprises a main-housing (2) that has a taper form drive-end (1) that gets engaged with Main-spindle of the corresponding machine-tool to transfer the rotary motion of the machine spindle to the grip-zone (5) and achieve the desired TIR/FIM(12). The main-housing(2) comprises a miniature power-pack system(8) which transmits pressure through cylindrical connector hole(27) being drilled at the other end called the grip zone(5) (where the cutter-shank /component (any particular diameter) can be gripped to perform any required machining operation,by hydrostatic pressure by the spring-back / contraction of shrink ring(4) . The pressure is applied through thermo polymer(10) which grips the cutting-tool shank/component under hydrostatic pressure. The shrink-ring (4) is shrunk fitted to form the collector (6) around it . The drive-end(1) and main housing (2) and shaft of main-housing which forms the grip-zone(5) are being made up of single metal piece construction where as the shrink-ring(4) is shrunk fitted . A single apparatus can be used for a component or a cutting-tool.

No. of Pages : 28 No. of Claims : 10

(12) PATENT APPLICATION PUBLICATION
(21) Application No.1666/CHE/2012 A
(19) INDIA
(22) Date of filing of Application :27/10/2012
(43) Publication Date : 28/08/2015

(54) Title of the invention : SELF RATIO SHIFT MECHANISM TO ELIMINATE THE SAFETY RISK AND THE DRIVER SKILL REQUIREMENT ASSOCIATED WITH THE TWO SPEED AXLE USAGE

(51) International classification :F16H
(31) Priority Document No :NA
(32) Priority Date :NA
(33) Name of priority country :NA
(86) International Application No :NA
Filing Date :NA
(87) International Publication No : NA
(61) Patent of Addition to Application Number :NA
Filing Date :NA
(62) Divisional to Application Number :NA
Filing Date :NA

(71)**Name of Applicant :**
1)MERITOR HVS (INDIA) LIMITED
Address of Applicant :Plot No. 36 Hootagalli Industrial Area Off Hunsur Road Mysore 570 018 Karnataka India Karnataka India
(72)**Name of Inventor :**
1)KULKARNI Ramesh Diwakar

(57) Abstract :
The present invention provides an improved two speed axle shifting mechanism for automotive vehicle. The present invention has an unique two speed actuation system capable of auto actuation/intelligent actuation/smart shift, for ratio shift from low speed to high speed or from high speed to low speed, based on pre-defined vehicle speed, engine Speed/RPM & current axle ratio with integrated timing for an optimized performance, by eliminating the skills,focus and efforts required by the driver for the two speed axle ratio shift. The present invention provides safer driving conditions to two speed axle fitted vehicles and also providing good and sustined fuel efficiency for a given route profile.

No. of Pages : 13 No. of Claims : 9

(12) PATENT APPLICATION PUBLICATION
(19) INDIA
(22) Date of filing of Application :17/02/2014

(21) Application No.739/CHE/2014 A
(43) Publication Date : 28/08/2015

(54) Title of the invention : NUT AND SCREW COMBINATION

(51) International classification	:F16L	(71)**Name of Applicant :**
(31) Priority Document No	:NA	**1)Bio Pure Technology Limited**
(32) Priority Date	:NA	Address of Applicant :of Unit M1, Hazleton Interchange, Lakesmere Road, Horndean PO8 9JU, United Kingdom U.K.
(33) Name of priority country	:NA	
(86) International Application No	:NA	(72)**Name of Inventor :**
Filing Date	:NA	**1)MAUNDER, Roy Peter**
(87) International Publication No	: NA	
(61) Patent of Addition to Application Number	:NA	
Filing Date	:NA	
(62) Divisional to Application Number	:NA	
Filing Date	:NA	

(57) Abstract :
A clamp having a pair of clamping arms hinged together at one end and connectable together at the other end by means of a screw and nut. The screw has a main threaded section for tightening of the nut onto a seat on an arm. It also has an unthreaded section of shaft, over which the nut can move freely. At the distal end of the screw is a further short threaded section, to retain the nut on the screw, when disconnected from the main threaded section. The nut can be removed totally from the screw by engaging with the short threaded section, and rotating to disengage. The other end of one arm having a clevis into which a crossbar on the screw connects, the other arm also having a clevis into which the screw pivotally fits, the upper surface of the clevis providing a seat for the nut. Figure 2

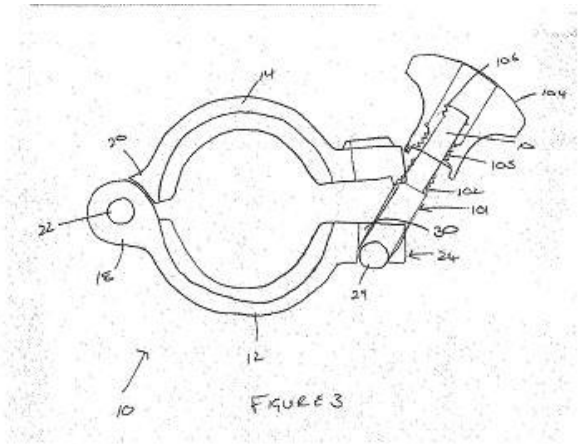

No. of Pages : 10 No. of Claims : 8

(12) PATENT APPLICATION PUBLICATION
(21) Application No.778/CHE/2014 A
(19) INDIA
(22) Date of filing of Application :18/02/2014
(43) Publication Date : 28/08/2015

(54) Title of the invention : DO-ALL PROFILE APPARATUS

(51) International classification	:B23Q	(71)**Name of Applicant :**
(31) Priority Document No	:NA	**1)RAMESH BABU.R**
(32) Priority Date	:NA	Address of Applicant :no-13.Sathyanarayana Temple street,1st floor precision foto type services, Near Gupta layout,Halasuru,Bangalore-560008.Karnataka,India. Karnataka India
(33) Name of priority country	:NA	
(86) International Application No	:NA	
Filing Date	:NA	(72)**Name of Inventor :**
(87) International Publication No	: NA	**1)RAMESH BABU.R**
(61) Patent of Addition to Application Number	:NA	
Filing Date	:NA	
(62) Divisional to Application Number	:NA	
Filing Date	:NA	

(57) Abstract :
ABSTRACT This Invention relates to Do-all Profile apparatus which comprises a mainhousing (2) that has a Faceplate (1A) (or a taperform (1C) or Ballhead (1B) or chuck holding) driveend (1) that gets engaged with machinespindle face by Allencapscrews lock of corresponding machinetool to transfer rotary motion . As it is condition apparatus supports gripping of Gear or any profile (Profiles like splines,Gears,Sprockets,Rotors and any Polygons) component™s surface . Apparatus can grip single component (13) or a multi component (21).Rotary motion is transferred from the machine spindle to the gripend(5) with TIR/FIM(12) of the machine. The mainhousing(2) comprises a miniaturepowerpacksystem(8) which transmits pressure through cylindrical connectorhole(27) to the grippingzone (5) comprising Profileshrinkring(4) . The pressure is applied through thermopolymer(10) which operates at shore hardness below 10 .The Profileshrinkring(4) which expands /contracts by pressure and grips the component due to hydrostatic pressure which is centrally true with the driveend and the machine spindle at it™s centralaxis (16) . Gripping length compensators(28) being used for shorter length components. The profileshrinkring(4) gets in contact with complete form and profile of component .

No. of Pages : 29 No. of Claims : 10

(12) PATENT APPLICATION PUBLICATION
(21) Application No.799/CHE/2014 A
(19) INDIA
(22) Date of filing of Application :19/02/2014
(43) Publication Date : 28/08/2015

(54) Title of the invention : A COMPOSITION FOR ENHANCED DERMAL EXTRACELLULAR MAINTENANCE AND PROTECTION AND USES THEREOF

(51) International classification	:A61K
(31) Priority Document No	:NA
(32) Priority Date	:NA
(33) Name of priority country	:NA
(86) International Application No	:NA
Filing Date	:NA
(87) International Publication No	: NA
(61) Patent of Addition to Application Number	:NA
Filing Date	:NA
(62) Divisional to Application Number	:NA
Filing Date	:NA

(71)**Name of Applicant :**
1)ITC LIMITED
Address of Applicant :ITC-LIFE SCIENCE AND TECHNOLOGY CENTER #3, 1st Main, Peenya Industrial Area, Phase 1, Bangalore - 560 058 Karnataka India
(72)**Name of Inventor :**
1)JOIS, Prashanth
2)KUMARI, Deva
3)H, Ramya
4)SRINIVASAN, Yuvaraj
5)DIXIT, Ajay Kumar
6)CHANDRASEKHARAN, Lakshmanan Chittur
7)BANDYOPADHYAY, Balaji

(57) Abstract :
The present disclosure relates to a composition comprising oleanolic acid, amino acid, dipeptide, and peptide for enhanced dermal barrier protection and maintenance. The present disclosure also provides a formulation comprising said composition for topical cosmetic application to delay skin aging.

No. of Pages : 22 No. of Claims : 10

(12) PATENT APPLICATION PUBLICATION
(21) Application No.504/CHE/2014 A
(19) INDIA
(22) Date of filing of Application :04/02/2014
(43) Publication Date : 28/08/2015

(54) Title of the invention : A MOTORCYCLE

(51) International classification :B62K25/00
(31) Priority Document No :NA
(32) Priority Date :NA
(33) Name of priority country :NA
(86) International Application No :NA
Filing Date :NA
(87) International Publication No : NA
(61) Patent of Addition to Application Number :NA
Filing Date :NA
(62) Divisional to Application Number :NA
Filing Date :NA

(71)**Name of Applicant :**
1)TVS MOTOR COMPANY LIMITED
Address of Applicant :JAYALAKSHMI ESTATES • NO.29 (OLD NO.8) HADDOWS ROAD, CHENNAI 600 006 Tamil Nadu India
(72)**Name of Inventor :**
1)ARUNKUMAR FRANCIS
2)CHEZHIAN NATARAJAN
3)M THIRUMAL
4)RAVIKUMAR GOKABALU

(57) Abstract :
Given disclosure claims a motorcycle having a frame that is made up of tubular as well as sheet frame members. Front part of said frame is made up of the tubular structure and the rear part of made up of the sheet metal. Use of sheet type frame member in the rear side of frame is increasing the space available between left and right frame members of the frame which helps in easy mounting and serviceability of the engine. Rear suspension unit is mounted on one side of the vehicle such that a free space on other side in the vehicle for accommodating required embodiments on the other side of the rear suspension unit. Front part of this frame is arranged such that it is aligned with the rear suspension unit and the axle of the rear wheel facilitating better load distribution on the frame. To be accompanied with Figure 5

No. of Pages : 13 No. of Claims : 7

(12) PATENT APPLICATION PUBLICATION
(19) INDIA
(22) Date of filing of Application :08/11/2013

(21) Application No.5041/CHE/2013 A
(43) Publication Date : 28/08/2015

(54) Title of the invention : SYSTEM AND METHOD FOR DETECTING AND CONTROLLING BLOWOUT IN COMBUSTION SYSTEMS

(51) International classification :F02C9/00
(31) Priority Document No :NA
(32) Priority Date :NA
(33) Name of priority country :NA
(86) International Application No :NA
Filing Date :NA
(87) International Publication No : NA
(61) Patent of Addition to Application Number :NA
Filing Date :NA
(62) Divisional to Application Number :NA
Filing Date :NA

(71)**Name of Applicant :**
1)Indian Institute of Technology Madras
Address of Applicant :Indian Institute of Technology Madras (IIT Madras), IIT PO, Chennai - 600036 Tamil Nadu India
(72)**Name of Inventor :**
1)Vishnu R. Unni
2)Vineeth Nair V.
3)R. I. Sujith

(57) Abstract :
A method and system for determining one or more precursors to control blowout in a combustor is provided. The method includes obtaining a time series signal corresponding to a dynamic state variable of the combustor. The method includes detecting one or more precursor based on an analysis of the time series signal using one or more parameters to control blowout in the combustor. One or more parameters include a Hurst exponent estimation, a Burst count estimation, and a recurrence quantification based estimation. FIG. 2

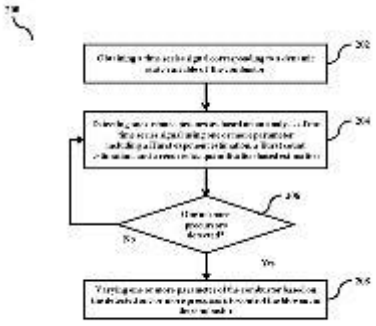

No. of Pages : 46 No. of Claims : 16

(12) PATENT APPLICATION PUBLICATION
(19) INDIA
(22) Date of filing of Application :19/02/2014
(21) Application No.787/CHE/2014 A
(43) Publication Date : 28/08/2015

(54) Title of the invention : APPARATUS FOR WITHDRAWING VAPOR FROM AN INTERNAL COMBUSTION ENGINE

(51) International classification :F02M
(31) Priority Document No :NA
(32) Priority Date :NA
(33) Name of priority country :NA
(86) International Application No :NA
Filing Date :NA
(87) International Publication No : NA
(61) Patent of Addition to Application Number :NA
Filing Date :NA
(62) Divisional to Application Number :NA
Filing Date :NA

(71)**Name of Applicant :**
1)Bosch Limited
Address of Applicant :Post Box No 3000, Hosur Road, Adugodi, Bangalore 560030, Karnataka, INDIA Karnataka India
2)Robert Bosch GmbH
(72)**Name of Inventor :**
1)MUNIRAJU Sanjay
2)VENKATACHALAPATHY Sudhindra Chintalapalli

(57) Abstract :
An apparatus for withdrawing vapor from an internal combustion engine (10) is disclosed. The apparatus comprises a vapor duct (60) comprising an upstream end (65) and a downstream end (70), the upstream end (65) in fluid communication with an outlet of said internal combustion engine (27), the downstream end (70) in fluid communication with an engine inlet manifold (48) characterized in that a flow pump (82) located in the vapor duct (60), the flow pump (82) adapted to operate when pressure in the internal combustion engine (27) is lesser than pressure at the downstream end (70) of the vapor duct (60). Reference figure: Figure 1

No. of Pages : 11 No. of Claims : 7

(12) PATENT APPLICATION PUBLICATION
(21) Application No.807/CHE/2014 A
(19) INDIA
(22) Date of filing of Application :19/02/2014
(43) Publication Date : 28/08/2015

(54) Title of the invention : PERSONALIZED AIR TRANSPORT APPARATUS

(51) International classification	:G05D	(71)**Name of Applicant :**
(31) Priority Document No	:NA	**1)Dr. Ambedkar Institute of Technology**
(32) Priority Date	:NA	Address of Applicant :BDA Outer Ring Road, Mallathahally,
(33) Name of priority country	:NA	Bengaluru-560056. Karnataka India
(86) International Application No	:NA	(72)**Name of Inventor :**
Filing Date	:NA	**1)Dr. Vyasamurthy Arun Kumar**
(87) International Publication No	: NA	**2)Aashirwad Parasar**
(61) Patent of Addition to Application Number	:NA	**3)Abhilash Shashikanth Baddur**
Filing Date	:NA	**4)Akshay Khatokar Jagadish**
(62) Divisional to Application Number	:NA	**5)Kusumitha Umesh**
Filing Date	:NA	**6)Nagappa Ramesh Beeranagaddi**

(57) Abstract :
0033] The present invention discloses an apparatus for personalized air transport. The present invention includes an at least two gravity based balancing assemblies (1) which are connected on either side of the control assembly (2) using appropriate couplings. The gravity based balancing assemblies (1) and control assembly (2) along with appropriate facilitate the use of force due to gravity on the apparatus to tilt the drive-unit axis close to vertical. The present invention also includes a one or more dampers connected in-between the control assemblies (2) and the gravity based balancing assembly (1) to avoid the over tilt of the control assembly (2). [0034] The apparatus disclosed herein eliminates the need of servo-fitted drive-units which facilitate complex operations generally needed for any airborne system; thereby the overall cost of the design is reduced making the apparatus more affordable which can be found use in various civil, military and research and development applications.

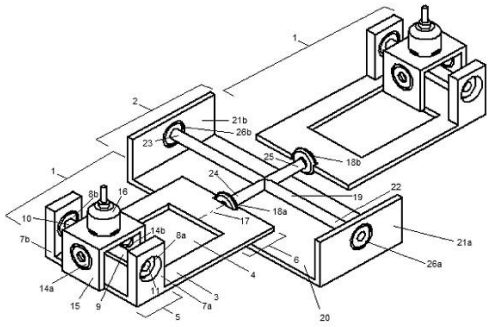

FIGURE 1

No. of Pages : 15 No. of Claims : 5

(12) PATENT APPLICATION PUBLICATION
(21) Application No.4333/CHE/2013 A
(19) INDIA
(22) Date of filing of Application :25/09/2013
(43) Publication Date : 28/08/2015

(54) Title of the invention : AUTOMATIC PRIORITIZATION OF NATURAL LANGUAGE TEXT INFORMATION

(51) International classification	:G06F17/00	(71)**Name of Applicant :**
(31) Priority Document No	:NA	**1)Accenture Global Services Limited**
(32) Priority Date	:NA	Address of Applicant :3 Grand Canal Plaza, Grand Canal Street Upper, Dublin 4, IRELAND Ireland
(33) Name of priority country	:NA	
(86) International Application No	:NA	(72)**Name of Inventor :**
Filing Date	:NA	**1)Misra Janardan**
(87) International Publication No	: NA	**2)Sengupta Shubhashis**
(61) Patent of Addition to Application Number	:NA	**3)Das Subhabrata**
Filing Date	:NA	
(62) Divisional to Application Number	:NA	
Filing Date	:NA	

(57) Abstract :
A device may receive text to be processed to prioritize text sections included in the text. The device may perform one or more prioritization techniques to prioritize the text sections. The one or more prioritization techniques may include at least one of: a semantic centrality analysis that indicates a degree to which a text section is semantically related to at least one other text section, an information content analysis that indicates a degree to which the text section includes information not included in the at least one other text section, or a combined analysis based on the semantic centrality analysis and the information content analysis. The device may prioritize the text sections, to form a set of prioritized text sections, based on performing the one or more prioritization techniques. The device may provide information that identifies the set of prioritized text sections.

No. of Pages : 58 No. of Claims : 20

(12) PATENT APPLICATION PUBLICATION
(21) Application No.517/CHE/2014 A
(19) INDIA
(22) Date of filing of Application :04/02/2014
(43) Publication Date : 28/08/2015

(54) Title of the invention : VEHICLE INFORMATION DISPLAY UNIT FOR A TWO WHEELED VEHICLE

(51) International classification :H02J3/00
(31) Priority Document No :NA
(32) Priority Date :NA
(33) Name of priority country :NA
(86) International Application No :NA
Filing Date :NA
(87) International Publication No : NA
(61) Patent of Addition to Application Number :NA
Filing Date :NA
(62) Divisional to Application Number :NA
Filing Date :NA

(71)**Name of Applicant :**
1)TVS MOTOR COMPANY LIMITED
Address of Applicant :JAYALAKSHMI ESTATES • NO.29 (OLD NO.8) HADDOWS ROAD, CHENNAI 600 006 Tamil Nadu India
(72)**Name of Inventor :**
1)AMEY DHURI
2)OLIVIER MURRO
3)AMIT DILIP RAJWADE
4)RAVINDRA BIDRAHALLI

(57) Abstract :
Given description discloses a vehicle information display system and an operation method for the same that has an information display mode and an information change mode. Based on the requirement of the rider, one can change the display location of any parameter or can remove the parameter from the display grid by manual interface. To be accompanied with Figure 5

No. of Pages : 15 No. of Claims : 10

(12) PATENT APPLICATION PUBLICATION
(21) Application No.896/CHE/2014 A
(19) INDIA
(22) Date of filing of Application :24/02/2014
(43) Publication Date : 28/08/2015

(54) Title of the invention : SYSTEM AND METHOD FOR CACHING TIME SERIES DATA

(51) International classification	:G06F	(71)**Name of Applicant :**
(31) Priority Document No	:NA	**1)INMOBI PTE LTD**
(32) Priority Date	:NA	Address of Applicant :65 CHULIA STREET, #25-01/02/03 OCBC
(33) Name of priority country	:NA	CENTRE, SINGAPORE 049513 Karnataka India
(86) International Application No	:NA	(72)**Name of Inventor :**
Filing Date	:NA	**1)JAYAPRAKASH, ARVIND**
(87) International Publication No	: NA	
(61) Patent of Addition to Application Number	:NA	
Filing Date	:NA	
(62) Divisional to Application Number	:NA	
Filing Date	:NA	

(57) Abstract :
The present invention provides a method and system for caching time series data. A computer system for caching time series data is disclosed. The computer system comprises one or more processors, at least one cache, and a computer readable storage medium. The computer readable storage medium contains instructions that, when executed by the one or more processors, causes the one or more processors to perform a set of steps comprising fetching the time series data from a time series data source, calculating one or more expiry timestamps, grouping the plurality of time series datum in to one or more time data chunks based on the one or more expiry timestamps, and storing a copy of the time series data and the one or more expiry timestamps in the at least one cache.

No. of Pages : 28 No. of Claims : 10

(12) PATENT APPLICATION PUBLICATION
(21) Application No.920/CHE/2014 A
(19) INDIA
(22) Date of filing of Application :24/02/2014
(43) Publication Date : 28/08/2015

(54) Title of the invention : LOW COST HOLLOW WALL AND LIGHT WEIGHT ROOF SLAB

(51) International classification :E04B
(31) Priority Document No :NA
(32) Priority Date :NA
(33) Name of priority country :NA
(86) International Application No :NA
Filing Date :NA
(87) International Publication No : NA
(61) Patent of Addition to Application Number :NA
Filing Date :NA
(62) Divisional to Application Number :NA
Filing Date :NA

(71)**Name of Applicant :**
1)KARIKULATHIL ULAHANNAN ABRAHAM
Address of Applicant :KARIKULATHIL HOUSE, KINAMKADU, PAYYAND. PO MANJERI, MALAPPURAM DT., PIN: 676 122 Kerala India
(72)**Name of Inventor :**
1)KARIKULATHIL ULAHANNAN ABRAHAM

(57) Abstract :
Claim -1 This is hollow, low cost wall. It is easy to make, strong and eco- friendly. It is made by using cement, sand, baby mettle iron, iron net, and plastic boxes. The boxes are made by connecting two cross sections of the boxes.. The measurement of the recycled plastic boxes is 45 cm x 45cmx 10cm. These boxes are laid in the form of a wall connected on either side with iron rods and iron nets and then plaster it in 3.5 cm thickness in the proportion of 1:2:3 . For all types of buildings and compound walls it is applicable. Claim -2 It is heat resistant and lightweight roof. It is low cost and very strong. The main component is boxes of 35 cm x 27cm x 7.5 cm measurement. Thermocol or recycled plastic can be used for the making of the boxes . Concrete is put in the 7 cm gap formed when boxes are laid in rows. Over the boxes concrete is laid in 4 cm thickness .For all types of buildings it is applicable.

No. of Pages : 8 No. of Claims : 2

(12) PATENT APPLICATION PUBLICATION
(21) Application No.4314/CHE/2013 A
(19) INDIA
(22) Date of filing of Application :23/09/2013
(43) Publication Date : 28/08/2015

(54) Title of the invention : VANCOMYCIN-SUGAR CONJUGATES AND USES THEREOF

(51) International classification :C07D
(31) Priority Document No :NA
(32) Priority Date :NA
(33) Name of priority country :NA
(86) International Application No :NA
Filing Date :NA
(87) International Publication No : NA
(61) Patent of Addition to Application Number :NA
Filing Date :NA
(62) Divisional to Application Number :NA
Filing Date :NA

(71)**Name of Applicant :**
1)JAWAHARLAL NEHRU CENTRE FOR ADVANCED SCIENTIFIC RESEARCH (JNCASR)
Address of Applicant :JAKKUR, BANGALORE - 560 064 Karnataka India
(72)**Name of Inventor :**
1)HALDAR, JAYANTA
2)YARLAGADDA, VENKATESWARLU
3)MANJUNATH, GOUTHAM BELAGULA
4)KONAI, MOHINI MOHAN

(57) Abstract :
The present disclosure relates to vancomycin-sugar conjugates, its stereoisomers, prodrugs and pharmaceutically acceptable salts thereof. The present disclosure also relates to process of preparation of the vancomycin-sugar conjugates, its stereoisomers, prodrugs, pharmaceutically acceptable salts thereof, and to pharmaceutical compositions containing them.

No. of Pages : 75 No. of Claims : 21

(12) PATENT APPLICATION PUBLICATION
(21) Application No.5383/CHE/2013 A
(19) INDIA
(22) Date of filing of Application :21/11/2013
(43) Publication Date : 28/08/2015

(54) Title of the invention : PROCESS FOR PREPARATION OF IRON SUCROSE

(51) International classification :C07K14/00
(31) Priority Document No :NA
(32) Priority Date :NA
(33) Name of priority country :NA
(86) International Application No :NA
Filing Date :NA
(87) International Publication No : NA
(61) Patent of Addition to Application Number :NA
Filing Date :NA
(62) Divisional to Application Number :NA
Filing Date :NA

(71)**Name of Applicant :**
1)Dr. Reddy™s Laboratories Limited
Address of Applicant :8-2-337, Road No. 3, Banjara Hills, Hyderabad-500 034, Andhra Pradesh, India Andhra Pradesh India
(72)**Name of Inventor :**
1)Amit Biswas
2)Vilas Dahanukar
3)Elati Ravi Ram Chandrasekhar
4)Mohanarangam Saravanan
5)Penumandla Raja Gopal
6)Chandra Sekhar Vempati
7)Kushal Surajmal Manudhane
8)Ande Sameer Kumar

(57) Abstract :
The present invention is directed to processes for preparation of iron sucrose complex and purification of the obtained iron sucrose through diafiltration.

No. of Pages : 13 No. of Claims : 9

(12) PATENT APPLICATION PUBLICATION
(21) Application No.777/CHE/2014 A
(19) INDIA
(22) Date of filing of Application :18/02/2014
(43) Publication Date : 28/08/2015

(54) Title of the invention : MULTI PURPOSE ID APPARATUS

(51) International classification	:B23Q	(71)**Name of Applicant :**
(31) Priority Document No	:NA	**1)RAMESH BABU.R**
(32) Priority Date	:NA	Address of Applicant :no-13.Sathyanarayana Temple street,1st floor precision foto type services, Near Gupta layout,Halasuru ,Bangalore-560008.Karnataka,India. Karnataka India
(33) Name of priority country	:NA	
(86) International Application No	:NA	
Filing Date	:NA	(72)**Name of Inventor :**
(87) International Publication No	: NA	**1)RAMESH BABU.R**
(61) Patent of Addition to Application Number	:NA	
Filing Date	:NA	
(62) Divisional to Application Number	:NA	
Filing Date	:NA	

(57) Abstract :
This invention relates to Multipurpose ID apparatus which comprises a mainhousing (2) that has a Faceplate (1A) (or a taper form (1C) or chuck holding) driveend (1) that gets screw locked with machine to transfer rotary motion. Apart from cylindrical components with the provision of Optional Roller cage arrangement (B) the apparatus can grip gears also. Oversize components up to 100 microns can be gripped by using straightspindlecollets/DA collets(A). It can grip single(13) or multiplecomponents (21) .Air relief hole(27) is provided to avoid airlock. The mainhousing(2) comprises a miniature power-pack system(8) which transmits pressure through cylindrical connector hole to the gripping zone (5) comprising shrink ring(4) . The pressure is applied through thermo polymer(10) which operates at shore hardness below 10 Shore A. The shrinkring(4) which expands /contracts by pressure and grips the component due to hydrostaticpressure which is centrally true with the driveend and the machinespindle at it™s centralaxis (16) . Gripping length compensators(11) being used for shorter length components. The shrinkring(4) gets in contact with complete form and profile of component while gripping.

No. of Pages : 30 No. of Claims : 10

(12) PATENT APPLICATION PUBLICATION
(21) Application No.798/CHE/2014 A
(19) INDIA
(22) Date of filing of Application :19/02/2014
(43) Publication Date : 28/08/2015

(54) Title of the invention : A COMPOSITION FOR INHIBITION OF INFRARED INDUCED AGING AND USES THEREOF

(51) International classification :A61P
(31) Priority Document No :NA
(32) Priority Date :NA
(33) Name of priority country :NA
(86) International Application No :NA
Filing Date :NA
(87) International Publication No : NA
(61) Patent of Addition to Application Number :NA
Filing Date :NA
(62) Divisional to Application Number :NA
Filing Date :NA

(71)**Name of Applicant :**
1)ITC LIMITED
Address of Applicant :ITC-LIFE SCIENCE AND TECHNOLOGY CENTER #3, 1st Main, Peenya Industrial Area, Phase 1, Bangalore - 560 058, Karnataka India
(72)**Name of Inventor :**
1)H, Ramya
2)JOIS, Prashanth
3)KUMARI, Deva
4)DIXIT, Ajay Kumar
5)CHANDRASEKHARAN, Lakshmanan Chittur
6)BANDYOPADHYAY, Balaji

(57) Abstract :
The present disclosure relates to a composition comprising Moringa oliefera plant extract, and a tetra-peptide that inhibits infrared induced loss of collagen. The disclosure further provides formulations for topical application comprising said composition to ameliorate effects of photoaging.

No. of Pages : 14 No. of Claims : 8

(12) PATENT APPLICATION PUBLICATION
(19) INDIA
(22) Date of filing of Application :26/02/2014
(21) Application No.962/CHE/2014 A
(43) Publication Date : 28/08/2015

(54) Title of the invention : CYLINDER HEAD ASSEMBLY FOR INTERNAL COMBUSTION ENGINE

(51) International classification :F02F1/00
(31) Priority Document No :NA
(32) Priority Date :NA
(33) Name of priority country :NA
(86) International Application No :NA
Filing Date :NA
(87) International Publication No : NA
(61) Patent of Addition to Application Number :NA
Filing Date :NA
(62) Divisional to Application Number :NA
Filing Date :NA

(71)**Name of Applicant :**
1)TVS MOTOR COMPANY LIMITED
Address of Applicant :JAYALAKSHMI ESTATES • NO.29 (OLD NO.8) HADDOWS ROAD, CHENNAI 600 006 Tamil Nadu India
(72)**Name of Inventor :**
1)MALUVADU SUNDARAMAN, ANANDKUMAR
2)DHARMAPURI, NAGENDRA KUMAR
3)ADIGA, VIJAYA BHASKAR

(57) Abstract :
The present subject matter discloses an internal combusti³n engine (100). The internal combusti³n engine (100) disclosed herein includes a cylinder block (108) mounted over a crankcase (110). A cylinder head assembly (102) having a cylinder head (104) and a cylinder head cover (112) is provided. The cylinder head assembly (102) is mounted on the cylinder block (108) defining a space therebetween. An intake port (124) is formed in a first side (123) of the space defined between the cylinder head (104) and the cylinder block (108), while an exhaust port (126) is formed in a second side (125). The cylinder head (104) includes an integrated chamber (114) for accommodating a reactor (106). The integrated chamber (114) is disposed adjoining the exhaust port (126) with a longitudinal axis of the integrated chamber (114) not in line with a longitudinal axis of the exhaust port (126). <To be published with Fig. l(a)>

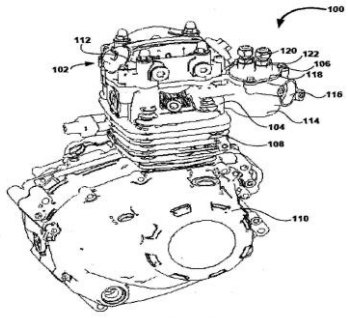

Fig. 1(a)

No. of Pages : 26 No. of Claims : 17

(12) PATENT APPLICATION PUBLICATION
(21) Application No.4529/CHE/2012 A
(19) INDIA
(22) Date of filing of Application :30/10/2012
(43) Publication Date : 28/08/2015

(54) Title of the invention : SINGLE STEP METHOD FOR COVALENTLY LINKING HEPARIN TO DECELLULARISED TISSUE

(51) International classification :A61L27/00
(31) Priority Document No :NA
(32) Priority Date :NA
(33) Name of priority country :NA
(86) International Application No :NA
Filing Date :NA
(87) International Publication No : NA
(61) Patent of Addition to Application Number :NA
Filing Date :NA
(62) Divisional to Application Number :NA
Filing Date :NA

(71)**Name of Applicant :**
1)SREE CHITRA TIRUNAL INSTIUTE FOR MEDICAL SCIENCES
Address of Applicant :TECHNOLOGY, BIOMEDICAL TECHNOLOGY WING, POOFAPPURA, THIRUVANATHAPURAM - 695012 Kerala India
(72)**Name of Inventor :**
1)PAYANAM RAMACHANDRA UMASHANKAR
2)PREM MOHAN MOHANA CHANDRA

(57) Abstract :
This invention relates to a process for the production of remodelable decellularised animal tissue wherein said animal tissue is subjected to decellularisation to obtain decellularised tissue, followed by crosslinking decellularised tissue with glutaraldehyde in phosphate buffered saline to obtain the crosslinked decellularised tissue, followed by treatment of the crosslinked decellularised tissue with heparin and incubation in alcohol to yield the remodelable decellularised animal tissue.

No. of Pages : 14 No. of Claims : 9

(12) PATENT APPLICATION PUBLICATION
(21) Application No.773/CHE/2014 A
(19) INDIA
(22) Date of filing of Application :18/02/2014
(43) Publication Date : 28/08/2015

(54) Title of the invention : ARBOR GRIPPER APPARATUS

(51) International classification :G04B
(31) Priority Document No :NA
(32) Priority Date :NA
(33) Name of priority country :NA
(86) International Application No :NA
Filing Date :NA
(87) International Publication No : NA
(61) Patent of Addition to Application Number :NA
Filing Date :NA
(62) Divisional to Application Number :NA
Filing Date :NA

(71)**Name of Applicant :**
1)RAMESH BABU.R
Address of Applicant :no:13.Sathyanarayana Temple street,1st floor precision foto type services, Near Gupta layout,Halasuru ,Bangalore-560008. Karnataka,India. Karnataka India
(72)**Name of Inventor :**
1)RAMESH BABU.R

(57) Abstract :
ABSTRACT This Invention relates to Arbor gripper apparatus comprises a main housing (1) is held integral with Arbor by thread lock at the time of performing cutting operation by the Arbor and rotates along with Arbor. The Arbor may house the cutter firmly and this Arbor gripper locks the Arbor & cutter thus eliminating any amount of slightest play and ensures positive grip. The main housing(1) comprises a miniature power-pack system(7) which transmits Hydrostatic pressure through cylindrical connector hole being drilled at the other end called the grip - end where the sliding pusher ring (11) is pushed by means of Hydrostatic pressure from the collector (6) .The end cap(10) controls and arrests the excess movement of the sliding pusher ring (11). The hydrostatic pressure is applied through thermo polymer(10) .Over coming the spring action the sliding pusher ring moves and locks the thread of Arbor firmly towards it™s longitudinal axis. On release of Hydrostatic pressure the tension spring (4) ensures to bring back the sliding pusher ring to it™s original position. The thread of the apparatus is in line with Arbor locking thread.

No. of Pages : 12 No. of Claims : 6

(12) PATENT APPLICATION PUBLICATION
(21) Application No.813/CHE/2014 A
(19) INDIA
(22) Date of filing of Application :19/02/2014
(43) Publication Date : 28/08/2015

(54) Title of the invention : DAMPERS LEVERAGE TECHNIQUE

(51) International classification :G01B
(31) Priority Document No :1
(32) Priority Date :19/02/2014
(33) Name of priority country :India
(86) International Application No :NA
Filing Date :NA
(87) International Publication No : NA
(61) Patent of Addition to Application Number :NA
Filing Date :NA
(62) Divisional to Application Number :NA
Filing Date :NA

(71)**Name of Applicant :**
1)MALKAR GIRIDHAR RAO
Address of Applicant :door no:14-42 T.N.Nagi Reddy Street Madanapalle Andhra Pradesh India
(72)**Name of Inventor :**
1)MALKAR GIRIDHAR RAO

(57) Abstract :
Take a quality hard rubber circular in shape with dimension of Dia 12 cm X 1.5 cm(thickness). Make hole in center of the rubber with dia of 4.5 cm (inner dia). Mark the Centre Point ˜O™ Mark the points A,B,C,D,E,F,G, and H (each at 45o from the center point ˜O™ of the rubber). From the point A cut the rubber and removed with a measurement of 1.5cm X 0.75cm X 1.5cm, leaving a distance of 0.5cm from point A in the outer diameter. Then cute with another measurement of 2cmX 2cmX1.5cm below this. Also cut B,C & D point in the same way. Then cut and remove the rubber with a measurement of 2.5cmX1.5cmX1.5cm at the point E. and cut 0.75X0.5cmX1.5cm I n the inner circle of the rubber. And also cut and remove F,G and H point in the same way.

No. of Pages : 3 No. of Claims : 1

(12) PATENT APPLICATION PUBLICATION
(21) Application No.981/CHE/2014 A
(19) INDIA
(22) Date of filing of Application :26/02/2014
(43) Publication Date : 28/08/2015

(54) Title of the invention : A MOBILE PHONE TO MEASURE THE BLOOD GLUCOSE LEVEL

(51) International classification :A61B
(31) Priority Document No :NA
(32) Priority Date :NA
(33) Name of priority country :NA
(86) International Application No :NA
Filing Date :NA
(87) International Publication No : NA
(61) Patent of Addition to Application Number :NA
Filing Date :NA
(62) Divisional to Application Number :NA
Filing Date :NA

(71)**Name of Applicant :**
1)Shreyas.H.S
Address of Applicant :S/o Shivaramaiah. M, #2126/b, 6th cross, kuvempunagar, channapatna, Ramanagara District, Karnataka, India Karnataka India
(72)**Name of Inventor :**
1)Shreyas.H.S

(57) Abstract :
Abstract The present invention relates to mobile phone with blood glucose measurement module. In one embodiment the mobile phone comprising: a mobile phone configured with blood glucose measurement module which includes blood glucose measurement unit for measuring a blood glucose level of blood absorbed into a test strip and a Central Processing Unit (CPU) for calculating and transmitting results of the measurement of the blood glucose level; and a socket formed in a outer part of the mobile which is configured to receive the test strip, wherein the test strip coupled to the blood glucose measurement module through socket

No. of Pages : 21 No. of Claims : 7

(12) PATENT APPLICATION PUBLICATION
(21) Application No.4302/CHE/2013 A
(19) INDIA
(22) Date of filing of Application :23/09/2013
(43) Publication Date : 28/08/2015

(54) Title of the invention : A METHOD OF DETECTING BACKUP POWER SUPPLY AT THE USAGE OUTLET

(51) International classification :H02J3/00
(31) Priority Document No :NA
(32) Priority Date :NA
(33) Name of priority country :NA
(86) International Application No :NA
Filing Date :NA
(87) International Publication No : NA
(61) Patent of Addition to Application Number :NA
Filing Date :NA
(62) Divisional to Application Number :NA
Filing Date :NA

(71)**Name of Applicant :**
1)Divyesh Kumar Shah
Address of Applicant :A 1001, Rohan Vasantha Apartments, Varthur Main Road, Marthahalli, Bangalore 560037 Karnataka India
(72)**Name of Inventor :**
1)Divyesh Kumar Shah

(57) Abstract :
A system and method of extricating a back-up power supply from an overload condition includes connecting a plurality of electrical appliances to a power source. The power source is one of an electrical mains and the back-up power supply. The method includes receiving power at a first electrical appliance. The first electrical appliance is operable to sense a first Total Harmonic Distortion (THD) from the power. Further, the first electrical appliance is operable to compare the first THD with a first predefined THD. The first electrical appliance is operable to identify the power source. The power source is the back-up power supply if the first THD is greater than the first predefined THD. The method includes detecting the overload condition in the back-up power supply. The method includes disconnecting the first electrical appliance from the back-up power supply, thereby extricating the back-up power supply from the overload condition.

No. of Pages : 33 No. of Claims : 10

(12) PATENT APPLICATION PUBLICATION
(21) Application No.5104/CHE/2013 A
(19) INDIA
(22) Date of filing of Application :12/11/2013
(43) Publication Date : 28/08/2015

(54) Title of the invention : A MULTI AXES SINGLE POST SOLAR PANEL MOUNTING STRUCTURE WITH THE FLEXIBILITY OF CHANGING THE ORIENTATION OF THE MODULES, TO MAXIMIZE THE OUTPUT FROM THE SYSTEM AND METHID THEREOF

(51) International classification :F24J2/00
(31) Priority Document No :NA
(32) Priority Date :NA
(33) Name of priority country :NA
(86) International Application No :NA
Filing Date :NA
(87) International Publication No : NA
(61) Patent of Addition to Application Number :NA
Filing Date :NA
(62) Divisional to Application Number :NA
Filing Date :NA

(71)**Name of Applicant :**
1)POPURI HIMAMSU
Address of Applicant :Eeva IP & IT Services Pvt Ltd, Plot No 201, H-No: 6-3-347/22/8, Dwarakapuri Colony, Panjagutta, Hyderabad. Andhra Pradesh India
2)KROTHAPALLI HARISH CHOWDARY
3)DASARI SRIRAM
4)PACHIPULUSU NIKHIL BABU
5)MAGANTI SRINIVAS RAO
(72)**Name of Inventor :**
1)BOGGAVARAPU CHOWDARY CHARAN
2)MEDIPALLY HARI KRISHNA
3)POPURI HIMAMSU
4)PACHIPULUSU NIKHIL BABU

(57) Abstract :
Abstract of the Invention A multi axes single post solar panel mounting structure with the flexibility of orientation change is disclosed. The system comprises of a telescopic pipe post 104 configured to fix to a base plate 102 on a lower side. The system also comprises of a horizontal rafter tube 116 attached to the telescopic pipe post 104 at a top end, wherein the horizontal rafter tube 116 is configured to translate with respect to the telescopic pipe post 104 along a longitudinal axis. The system further comprises of a vertical rafter tube 106 attached to the horizontal rafter tube 116 at its top hinge 118 through a connector and a telescopic tube bracing 108 having a circular cross-section attached to the telescopic pipe post 104 at its lower hinge connected with a supporting tube 110 with a connector. A plurality of purlins 122 are connected to a plurality of L shaped plates 124 welded to the vertical rafter 106 and a plurality of tie rods connects the purlins in a bay account for the twisting of purlins. The telescopic tube bracing support the vertical rafter tube to transfer the loads to the telescopic pipe post axially with a provision with a plurality of slots on the telescopic tube bracing at appropriate distances accounting for a seasonal tilt of the solar panel mounting structure.

No. of Pages : 15 No. of Claims : 7

(12) PATENT APPLICATION PUBLICATION
(21) Application No.982/CHE/2014 A
(19) INDIA
(22) Date of filing of Application :26/02/2014
(43) Publication Date : 28/08/2015

(54) Title of the invention : A BODILY FLUID CARRYING STRIP WITH LANCING POINT

(51) International classification :A61B
(31) Priority Document No :NA
(32) Priority Date :NA
(33) Name of priority country :NA
(86) International Application No :NA
Filing Date :NA
(87) International Publication No : NA
(61) Patent of Addition to Application Number :NA
Filing Date :NA
(62) Divisional to Application Number :NA
Filing Date :NA

(71)**Name of Applicant :**
1)Shreyas.H.S
Address of Applicant :S/o Shivaramaiah. M, #2126/b, 6th cross, kuvempunagar, channapatna, Ramanagara District, Karnataka, India Karnataka India
(72)**Name of Inventor :**
1)Shreyas.H.S

(57) Abstract :
The present invention relates to bodily fluid carrying strip with sharp point. In one embodiment, the bodily fluid carrying strips comprising: a bodily fluid carrying strip having a first strip end, a second strip end and a, intermediate elongated body positioned in between first strip and second strip end, wherein the first strip end ends with a sharp tip and second strip end with the plurality of conductive contacts, a fluid sampling aperture positioned in the midpoint of the intermediate elongated body of strip with fluid sample channel and vent opening for receiving the fluid, wherein the fluid sample channel situated in-between the sampling aperture and a vent opening spaced from the sampling aperture and a plurality of conductive layers in the second strip end of the bodily fluid carrying strip coupled to the fluid sample channel and to the glucose meter.

No. of Pages : 20 No. of Claims : 8

(12) PATENT APPLICATION PUBLICATION
(21) Application No.917/CHE/2014 A
(19) INDIA
(22) Date of filing of Application :24/02/2014
(43) Publication Date : 28/08/2015

(54) Title of the invention : A METHOD AND SYSTEM FOR SYNCHRONIZING, ORGANIZING AND RANKING CONTACTS IN AN ELECTRONIC DEVICE

(51) International classification :G06F17/00
(31) Priority Document No :NA
(32) Priority Date :NA
(33) Name of priority country :NA
(86) International Application No :NA
Filing Date :NA
(87) International Publication No : NA
(61) Patent of Addition to Application Number :NA
Filing Date :NA
(62) Divisional to Application Number :NA
Filing Date :NA

(71)**Name of Applicant :**
1)Samsung R & D Institute India- Bangalore Private Limited
Address of Applicant :# 2870, Orion Building, Bagmane Constellation Business Park, Outer Ring Road, Doddanekundi Circle, Marathahalli Post, Bangalore-560037 Karnataka India
(72)**Name of Inventor :**
1)Satnam Singh
2)Gaurav Kumar Jain
3)Prudhvi Kosaraju
4)Girish Kulkarni

(57) Abstract :
A method and system for synching, organizing and ranking user contacts by obtaining user contacts profile from various data sources is disclosed. A degree of similarity for each contact can be computed using the identified data items, such as to synchronize and automatically organize the contacts associated with various data sources. Further, the contacts are grouped into various social groups by computing a degree of similarity between each data item associated with the owner™s profile data and data items associated with the contact™s profile data. Furthermore, a degree of involvement of each contact is computed based on activities performed by owner and the associated contacts over a time window, such as to automatically rank the contacts associated with the various data sources. FIG. 1

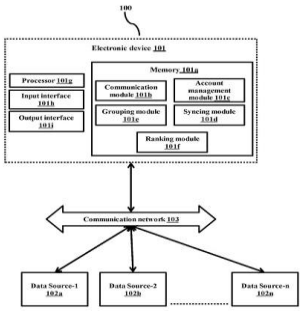

FIG. 1

No. of Pages : 101 No. of Claims : 39

(12) PATENT APPLICATION PUBLICATION
(21) Application No.507/CHE/2014 A
(19) INDIA
(22) Date of filing of Application :04/02/2014
(43) Publication Date : 28/08/2015

(54) Title of the invention : FRONT FORK COVER FOR A TWO WHEELED VEHICLE

(51) International classification :B60T8/00
(31) Priority Document No :NA
(32) Priority Date :NA
(33) Name of priority country :NA
(86) International Application No :NA
Filing Date :NA
(87) International Publication No : NA
(61) Patent of Addition to Application Number :NA
Filing Date :NA
(62) Divisional to Application Number :NA
Filing Date :NA

(71)**Name of Applicant :**
1)TVS MOTOR COMPANY LIMITED
Address of Applicant :JAYALAKSHMI ESTATES • NO.29 (OLD NO.8) HADDOWS ROAD, CHENNAI 600 006 Tamil Nadu India
(72)**Name of Inventor :**
1)ELIAS C ABRAHAM
2)MAHESH PUTHIGE
3)PRASHANTH C
4)RAVINDRA BIDRAHALLI

(57) Abstract :
Disclosed invention provides a fork cover which is integrated with the ABS cover for the vehicle. This is a single piece unit which solves mounting issue of the fork cover as well its lower portion is structured to cover ABS unit. Due to one piece construction minimum mounting points provides simple arrangement which also helps in serviceability issue at user end.

No. of Pages : 9 No. of Claims : 4

(12) PATENT APPLICATION PUBLICATION
(19) INDIA
(22) Date of filing of Application :04/02/2014
(21) Application No.501/CHE/2014 A
(43) Publication Date : 28/08/2015

(54) Title of the invention : VEHICLE INFORMATION UNIT MOUNTING ARRANGEMENT IN A MOTORCYCLE

(51) International classification :B62K21/00
(31) Priority Document No :NA
(32) Priority Date :NA
(33) Name of priority country :NA
(86) International Application No :NA
Filing Date :NA
(87) International Publication No : NA
(61) Patent of Addition to Application Number :NA
Filing Date :NA
(62) Divisional to Application Number :NA
Filing Date :NA

(71)**Name of Applicant :**
1)TVS MOTOR COMPANY LIMITED
Address of Applicant :JAYALAKSHMI ESTATES • NO.29 (OLD NO.8) HADDOWS ROAD, CHENNAI 600 006 Tamil Nadu India
(72)**Name of Inventor :**
1)ARUNKUMAR FRANCIS
2)CHEZHIAN NATARAJAN
3)S MANIKANDA VIGNESH
4)RAVIKUMAR GOKABALU

(57) Abstract :
Described invention describes a mounting structure of the vehicle information unit on handle bar assembly of the motorcycle. Said vehicle information unit is mounted on the handle bar through handle bar clamp that is mounted over the upper portion of a triple clamp. Said triple clamp is mounted between left and right front suspension unit and connecting them with the handle bar assembly.

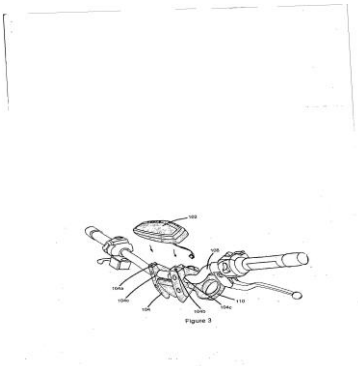

No. of Pages : 10 No. of Claims : 5

(12) PATENT APPLICATION PUBLICATION
(21) Application No.5547/CHE/2013 A
(19) INDIA
(22) Date of filing of Application :02/12/2013
(43) Publication Date : 28/08/2015

(54) Title of the invention : ONE POT PROCESS FOR THE PREPARATION OF ACETYLATED AMINO PHENOLS

(51) International classification :C09D7/00
(31) Priority Document No :NA
(32) Priority Date :NA
(33) Name of priority country :NA
(86) International Application No :NA
Filing Date :NA
(87) International Publication No : NA
(61) Patent of Addition to Application Number :NA
Filing Date :NA
(62) Divisional to Application Number :NA
Filing Date :NA

(71)**Name of Applicant :**
1)GRANULES INDIA LIMITED
Address of Applicant :2ND FLOOR, 3RD BLOCK, MY HOME HUB, MADHAPUR, HYDERABAD - 500 081 Andhra Pradesh India
(72)**Name of Inventor :**
1)CHIGURUPATI KRISHNA PRASAD
2)PRASHANT PURUSHOTTAM BARVE

(57) Abstract :
The present invention relates to one pot process for the preparation of acetylated amino phenols from aryl nitro compounds.

No. of Pages : 13 No. of Claims : 8

(12) PATENT APPLICATION PUBLICATION
(19) INDIA
(22) Date of filing of Application :19/02/2014
(21) Application No.782/CHE/2014 A
(43) Publication Date : 28/08/2015

(54) Title of the invention : METHOD AND APPARATUS FOR REMOVING MATERIAL FROM A CUTTING INSERT USING ELECTROMAGNETIC RADIATION

(51) International classification	:G02B 27/00	(71)**Name of Applicant :**
(31) Priority Document No	:NA	**1)KENNAMETAL INDIA LIMITED**
(32) Priority Date	:NA	Address of Applicant :8/9th Mile, Tumkur Road, Bangalore-560073, Karnataka, India. Karnataka India
(33) Name of priority country	:NA	(72)**Name of Inventor :**
(86) International Application No	:NA	**1)NAVEEN KONDAMEEDI**
Filing Date	:NA	
(87) International Publication No	: NA	
(61) Patent of Addition to Application Number	:NA	
Filing Date	:NA	
(62) Divisional to Application Number	:NA	
Filing Date	:NA	

(57) Abstract :
A method and apparatus (10) for removing material from a cutting insert (100) is disclosed. A source (12) of electromagnetic radiation produces a laser beam (14) that passes through a aperture (20) for truncating a dimension of the laser beam (14) and a homogenizer for providing a cross section of the laser beam (14) with a uniform energy density. A mask (26) having a predetermined shape reduces the dimension of the laser beam (14), and an imaging lens (30) projects the laser beam (14) onto a surface of the cutting insert (100). The predetermined shape of the mask (26) provides for selective adjustment of an amount of material removed from the surface of the cutting insert (100). In one embodiment, the mask (26) has a shape of an isosceles trapezoid for producing a T-land surface (108) at the intersection between a top rake face (102) and the flank face (106) of the cutting insert (100). FIG. 1

FIG. 1

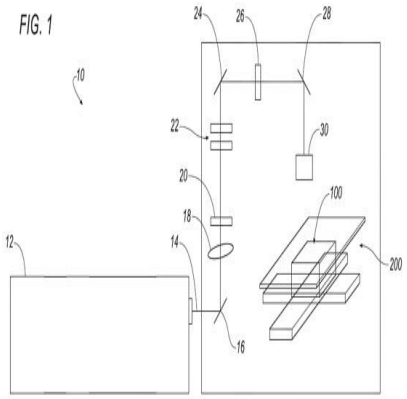

No. of Pages : 14 No. of Claims : 17

(12) PATENT APPLICATION PUBLICATION
(21) Application No.971/CHE/2014 A
(19) INDIA
(22) Date of filing of Application :26/02/2014
(43) Publication Date : 28/08/2015

(54) Title of the invention : A METHOD AND SYSTEM FOR PROVIDING DATA SECURITY

(51) International classification :H04L
(31) Priority Document No :NA
(32) Priority Date :NA
(33) Name of priority country :NA
(86) International Application No :NA
Filing Date :NA
(87) International Publication No : NA
(61) Patent of Addition to Application Number :NA
Filing Date :NA
(62) Divisional to Application Number :NA
Filing Date :NA

(71)**Name of Applicant :**
1)Samsung R & D Institute India- Bangalore Private Limited
Address of Applicant :# 2870, Orion Building, Bagmane Constellation Business Park, Outer Ring Road, Doddanekundi Circle, Marathahalli Post, Bangalore-560037 Karnataka India
(72)**Name of Inventor :**
1)Muhammad Saheer Cheruvath
2)Perumal Raj Sivarajan

(57) Abstract :
Embodiments herein provide a method for data security. A data passcode used for data encryption in electronic devices is encrypted and secret shares of the encrypted passcode are distributed to multiple entities. Recovery of the passcode and the encrypted data is performed by obtaining the secret shares from the multiple entities to reconstruct the passcode used for data encryption. FIG. 6

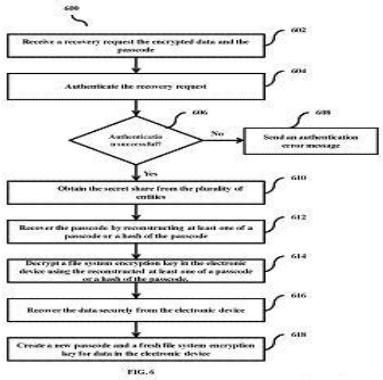

FIG. 6

No. of Pages : 41 No. of Claims : 15

(12) PATENT APPLICATION PUBLICATION
(21) Application No.4265/CHE/2013 A
(19) INDIA
(22) Date of filing of Application :20/09/2013
(43) Publication Date : 28/08/2015

(54) Title of the invention : MONOCLONAL ANTIBODY AGAINST RABIES AND USES THEREOF

(51) International classification :C07K16/00
(31) Priority Document No :NA
(32) Priority Date :NA
(33) Name of priority country :NA
(86) International Application No :NA
Filing Date :NA
(87) International Publication No : NA
(61) Patent of Addition to Application Number :NA
Filing Date :NA
(62) Divisional to Application Number :NA
Filing Date :NA

(71)**Name of Applicant :**
1)INDIAN IMMUNOLOGICALS LIMITED
Address of Applicant :Gachibowli, Hyderabad - 500032, Andhra Pradesh Meghalaya India
(72)**Name of Inventor :**
1)SRIDEVI, Nimmagadda Venkata
2)MADHAHA, Aavula Shukra
3)SAMUEL, Sula
4)SUGUMAR, Parthasarathy
5)NEELAKANTAM, Biradhar
6)RAJENDRA, Lingala
7)KUMAR, Kanakasapapathy Anand

(57) Abstract :
The present disclosure relates to the process of synthesis of a single chain variable fragment (scFv) antibody from murine immunized library that is specific and reactive against rabies CVS glycoprotein. In particular, the present disclosure relates to scFv antibody that enables the detection of rabies CVS antigen in a sample. The present disclosure further provides recombinant DNA vector, and recombinant host cell comprising the polynucleotide sequences encoding the single chain variable fragment of the antibody.

No. of Pages : 33 No. of Claims : 12

(12) PATENT APPLICATION PUBLICATION
(21) Application No.4578/CHE/2013 A
(19) INDIA
(22) Date of filing of Application :09/10/2013
(43) Publication Date : 28/08/2015

(54) Title of the invention : A DEVICE AND METHODS FOR DETERMINING THE ELEMENTAL IDENTITY AND ANALYSIS ON MOVING TARGET FROM A VARIABLE STAND-OFF DISTANCE

(51) International classification :G01N
(31) Priority Document No :NA
(32) Priority Date :NA
(33) Name of priority country :NA
(86) International Application No :NA
Filing Date :NA
(87) International Publication No : NA
(61) Patent of Addition to Application Number :NA
Filing Date :NA
(62) Divisional to Application Number :NA
Filing Date :NA

(71)**Name of Applicant :**
1)INDIAN INSTITUTE OF TECHNOLOGY MADRAS
Address of Applicant :IIT P.O., CHENNAI 600 036 Tamil Nadu India
(72)**Name of Inventor :**
1)V SATHIESH KUMAR
2)NILESH JAYANTILAL VASA
3)R SARATHI

(57) Abstract :
This Invention relates to an optical device for detecting a contaminant or a pollutant layer on moving targets wherein the Laser Induced Breakdown Spectroscopy (LIBS) technique is combined with a photometric device for determining the presence of various elements and analysis of moving target material from a variable remote distance where the photometric device combined with an optical fiber and a translation stage covers the optical emission from the laser induced plasma from a rotating target by adjusting the optical fiber position near a focal plane enables to measure pollutant layer from different stand-off distances can be achieved

No. of Pages : 23 No. of Claims : 4

(12) PATENT APPLICATION PUBLICATION
(21) Application No.830/CHE/2014 A
(19) INDIA
(22) Date of filing of Application :20/02/2014
(43) Publication Date : 28/08/2015

(54) Title of the invention : A METHOD AND SYSTEM FOR PRESENTING COMMENTS IN AN OBJECT FROM A PLURALITY OF SOURCES

(51) International classification :G06F
(31) Priority Document No :NA
(32) Priority Date :NA
(33) Name of priority country :NA
(86) International Application No :NA
Filing Date :NA
(87) International Publication No : NA
(61) Patent of Addition to Application Number :NA
Filing Date :NA
(62) Divisional to Application Number :NA
Filing Date :NA

(71)**Name of Applicant :**
1)Samsung R & D Institute India- Bangalore Private Limited
Address of Applicant :# 2870, Orion Building, Bagmane Constellation Business Park, Outer Ring Road, Doddanekundi Circle, Marathahalli Post, Bangalore-560037 Karnataka India
(72)**Name of Inventor :**
1)Sharath Kumar Kodase
2)Rohini M
3)Rachna Saxena

(57) Abstract :
A method and system for presenting one or more comments associated with an object from a plurality of sources is provided. The method comprises receiving a comment for a segment of the object displayed in an electronic device. Further, the method comprises computing segment references associated with the segment and store the segment reference in a database. Whenever, the same segment is displayed in the same object or a different object, the comment associated with that segment is presented. FIG. 1

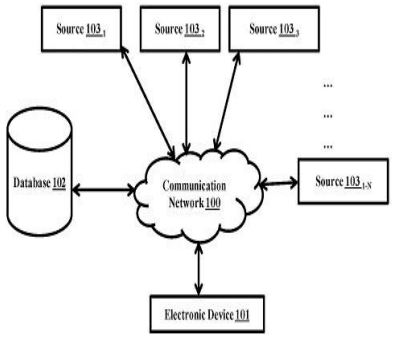

FIG. 1a

No. of Pages : 63 No. of Claims : 22

(12) PATENT APPLICATION PUBLICATION
(19) INDIA
(22) Date of filing of Application :25/02/2014
(21) Application No.947/CHE/2014 A
(43) Publication Date : 28/08/2015

(54) Title of the invention : A method and system for updating policy information to User Equipment (UE)

(51) International classification :H04L
(31) Priority Document No :NA
(32) Priority Date :NA
(33) Name of priority country :NA
(86) International Application No :NA
Filing Date :NA
(87) International Publication No : NA
(61) Patent of Addition to Application Number :NA
Filing Date :NA
(62) Divisional to Application Number :NA
Filing Date :NA

(71)**Name of Applicant :**
1)Samsung R & D Institute India- Bangalore Private Limited
Address of Applicant :# 2870, Orion Building, Bagmane Constellation Business Park, Outer Ring Road, Doddanekundi Circle, Marathahalli Post, Bangalore-560037 Karnataka India
(72)**Name of Inventor :**
1)Hymn Devy
2)Ravi Kumar HB
3)Varun Singh
4)Pavan Kulkarni

(57) Abstract :
A method and system for updating one or more policies to a User Equipment (UE) by a network policy control server in a wireless network is provided. The method includes receiving, an indication from the UE by the network policy control server. The indication includes capability information of the UE and expired policy information to the network policy control server. The network policy control server interprets the indication and identifies the one or more policies to the UE based on the capabilities of the UE. Furthermore, the method includes sending one or more policies to the UE by the network policy control server. The method and system utilizes a generic alert message to inform the network policy control server for sending the one or more policies to the UE. FIG. 4

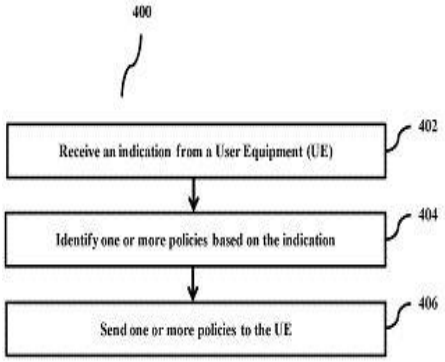

FIG. 4

No. of Pages : 33 No. of Claims : 18

(12) PATENT APPLICATION PUBLICATION
(21) Application No.2496/CHE/2013 A
(19) INDIA
(22) Date of filing of Application :06/06/2013
(43) Publication Date : 28/08/2015

(54) Title of the invention : A COMPOSITION AND A PROCESS FOR SUGAR PROCESSING

(51) International classification :C12N9/00
(31) Priority Document No :NA
(32) Priority Date :NA
(33) Name of priority country :NA
(86) International Application No :NA
Filing Date :NA
(87) International Publication No : NA
(61) Patent of Addition to Application Number :NA
Filing Date :NA
(62) Divisional to Application Number :NA
Filing Date :NA

(71)**Name of Applicant :**
1)RICHCORE LIFESCIENCES PVT. LTD.
Address of Applicant :Plot No. 204 & 237, Bommasandra - Jigani Link Road, K.I.A.D.B Industrial Area, Bangalore Rural District, Karnataka 560105, India Karnataka India
(72)**Name of Inventor :**
1)SUBRAMANI RAMACHANDRAPPA
2)SWATI SUCHARITA DASH

(57) Abstract :
The present invention relates to an enzyme based sulphur replacement product and an enzyme based sulphur replacement process applicable in sugar processing. The present invention also relates to a composition comprising said enzyme based sulphur replacement product; and a final product obtained after the sugar processing.

No. of Pages : 47 No. of Claims : 23

(12) PATENT APPLICATION PUBLICATION
(21) Application No.5177/CHE/2013 A
(19) INDIA
(22) Date of filing of Application :14/11/2013
(43) Publication Date : 28/08/2015

(54) Title of the invention : ARCHITECTURE FOR OPTIMIZED HANDOVER LATENCY IN MOBILE NETWORKS

(51) International classification :H04W36/00
(31) Priority Document No :NA
(32) Priority Date :NA
(33) Name of priority country :NA
(86) International Application No :NA
Filing Date :NA
(87) International Publication No : NA
(61) Patent of Addition to Application Number :NA
Filing Date :NA
(62) Divisional to Application Number :NA
Filing Date :NA

(71)**Name of Applicant :**
1)SAVEETHA SCHOOL OF ENGINEERING SAVEETHA UNIVERSITY
Address of Applicant :SAVEETHA NAGAR, THANDALAM, CHENNAI - 602 105 Tamil Nadu India
(72)**Name of Inventor :**
1)B. JAIGANESH
2)J. MOHANA
3)G. LAVANYA
4)SNEHA SUSAN ABRAHAM

(57) Abstract :
The most critical part of this mobility IP is the handover. During this phase, the mobile node (MN) is not able to send or receive data, and some packets may be lost or delayed due to intermediate buffers. This is often unacceptable for video streaming. The IETF MIPv6 Signaling and HandofF Optimization working group has designed Fast Handovers for Mobile IPv6 (FMJPv6) in order to speed it up. The main goal of FMIPv6 is to reduce both the handover latency and the packet losses to zero.

No. of Pages : 14 No. of Claims : 4

(12) PATENT APPLICATION PUBLICATION
(21) Application No.806/CHE/2014 A
(19) INDIA
(22) Date of filing of Application :19/02/2014
(43) Publication Date : 28/08/2015

(54) Title of the invention : METHODS AND APPARATUS FOR USING WLAN CHIPS TO SUPPORT COMMUNIATIONS IN LICENSED FREQUENCY BANDS

(51) International classification :H04W88/00
(31) Priority Document No :NA
(32) Priority Date :NA
(33) Name of priority country :NA
(86) International Application No :NA
Filing Date :NA
(87) International Publication No : NA
(61) Patent of Addition to Application Number :NA
Filing Date :NA
(62) Divisional to Application Number :NA
Filing Date :NA

(71)**Name of Applicant :**
1)PROXIM WIRELESS CORPORATION
Address of Applicant :1561 BUCKEYE DRIVE, MILPITAS, CALIFORNIA 95035 U.S.A.
(72)**Name of Inventor :**
1)NAGARAJU NERELLA
2)PHANI K, VENKATA
3)SYAM GONNALAGADDA

(57) Abstract :
Methods and apparatus for using WLAN chips, e.g., WiFi communications chips, to support communications in licensed frequency spectrum which is located outside unlicensed frequency spectrum available for unlicensed WiFi communications, are described. Through the use of low cost WiFi communications chips in frequency bands for which they were not originally intended, low cost communication is achieved in licensed frequency bands. Multimode devices are also possible in which communications may be implemented in either the licensed or unlicensed frequency band using a single WLAN transceiver chip.

No. of Pages : 45 No. of Claims : 19

(12) PATENT APPLICATION PUBLICATION
(21) Application No.872/CHE/2014 A
(19) INDIA
(22) Date of filing of Application :21/02/2014
(43) Publication Date : 28/08/2015

(54) Title of the invention : IMPROVED PROCESS FOR THE PREPARATION OF RITONAVIR

(51) International classification :A61K31/00
(31) Priority Document No :NA
(32) Priority Date :NA
(33) Name of priority country :NA
(86) International Application No :NA
Filing Date :NA
(87) International Publication No : NA
(61) Patent of Addition to Application Number :NA
Filing Date :NA
(62) Divisional to Application Number :NA
Filing Date :NA

(71)**Name of Applicant :**
1)MYLAN LABORATORIES LTD
Address of Applicant :PLOT NO 564/A/22, ROAD NO 92, JUBILEE HILLS, HYDERABAD - 500 033 Andhra Pradesh India
(72)**Name of Inventor :**
1)VELLANKI, SIVA RAM PRASAD
2)NADELLA, MADHU MURTHY
3)MULAMALLA, RAJENDAR REDDY
4)RAMABHOTLA, REVATHI SRINIVAS

(57) Abstract :
IMPROVED PROCESS FOR THE PREPARATION OF RITONAVIR • The present disclosure provides an improved process for the preparation of ritonavir form I.

No. of Pages : 11 No. of Claims : 10

(12) PATENT APPLICATION PUBLICATION
(21) Application No.897/CHE/2014 A
(19) INDIA
(22) Date of filing of Application :24/02/2014
(43) Publication Date : 28/08/2015

(54) Title of the invention : SYSTEM AND METHOD FOR CONFIGURING OPERATIONAL PARAMETERS ON THE MEDICAL DEVICE

(51) International classification :G06F
(31) Priority Document No :NA
(32) Priority Date :NA
(33) Name of priority country :NA
(86) International Application No :NA
Filing Date :NA
(87) International Publication No : NA
(61) Patent of Addition to Application Number :NA
Filing Date :NA
(62) Divisional to Application Number :NA
Filing Date :NA

(71)**Name of Applicant :**
1)MOBME WIRELESS SOLUTIONS LTD
Address of Applicant :MOBME WIRELESS SOLUTIONS LTD., 41/3197, FOURTH FLOOR, BHAGEERATHA SQUARE, NEAR TOWN HALL, KACHERIPPADY, COCHIN-682018, KERALA, INDIA Kerala India
(72)**Name of Inventor :**
1)GOPAL, VISHNU
2)SANKAR, ANOOP
3)VIJAYKUMAR, SANJAY

(57) Abstract :
The present invention provides a system and method for configuring operational parameters on a plurality of medical devices. The system and method includes receiving a plurality of authentication request messages, authorizing a plurality of medical professionals, receiving a plurality of identifiers of a plurality of patients, retrieving a plurality of medical histories of the plurality of patients, and configuring the operational parameters on the plurality of medical devices. The plurality of authentication request messages includes a mobile identity of each medical professional of the plurality of medical professionals, and a device identifier of each medical device of the plurality of medical devices.

No. of Pages : 37 No. of Claims : 10

(12) PATENT APPLICATION PUBLICATION
(21) Application No.3501/CHENP/2009 A
(19) INDIA
(22) Date of filing of Application :18/06/2009
(43) Publication Date : 28/08/2015

(54) Title of the invention : LUBRICATING OIL COMPOSITION COMPRISING AN EPOXIDISED ESTER AND AN ASPARTIC ACID DERIVATIVE

(51) International classification :C10M141/06
(31) Priority Document No :2006-341553
(32) Priority Date :19/12/2006
(33) Name of priority country :Japan
(86) International Application No :PCT/EP07/64026
Filing Date :17/12/2007
(87) International Publication No :WO 2008/074760 A1
(61) Patent of Addition to Application Number :NA
Filing Date :NA
(62) Divisional to Application Number :NA
Filing Date :NA

(71)**Name of Applicant :**
1)SHELL INTERNATIONALE RESEARCH MAATSCHAPPIJ B.V.
Address of Applicant :CAREL VAN BYLANDTLAAN 30, NL-2596 HR THE HAGUE Netherlands
(72)**Name of Inventor :**
1)NAGAKARI, MITSUHIRO
2)KANEKO, HIROSHI
3)BABA, YOSHIHARU

(57) Abstract :
Abstract LUBRICATING OIL COMPOSITION COMPRISING AN EPOXIOISED ESTER AND AN ASPARTIC ACID DERIVATIVE The present invention aims to obtain a lubricating oil composition with good corrosion resistance properties, strong sludge inhibition and also superior energy saving properties for use in all kinds of lubricating oil compositions which use highly refined base oils, in particular in machine oils, tv -bine oils, compressor oils, hydraulic oils, gear oils, sLaing friction oils, bearing oils and calibration oils. To this end the invention provides a lubricating oil composition comprising a base oil having a sulphur content of not more than 300 ppm, an aspartic acid derivative and an epoxidised ester compound.

No. of Pages : 40 No. of Claims : 11

(12) PATENT APPLICATION PUBLICATION
(21) Application No.4480/CHE/2013 A
(19) INDIA
(22) Date of filing of Application :03/10/2013
(43) Publication Date : 28/08/2015

(54) Title of the invention : INTEGRATED CLOSED-LOOP HIGHLY EFFICIENT RENEWABLE ENERGY SYSTEM

(51) International classification :H02J
(31) Priority Document No :NA
(32) Priority Date :NA
(33) Name of priority country :NA
(86) International Application No :NA
Filing Date :NA
(87) International Publication No : NA
(61) Patent of Addition to Application Number :NA
Filing Date :NA
(62) Divisional to Application Number :NA
Filing Date :NA

(71)**Name of Applicant :**
1)AMRITA VISHWA VIDYAPEETHAM
Address of Applicant :AMRITANAGAR P.O., ETTIMADAI COIMBATORE 641 112 Tamil Nadu India
(72)**Name of Inventor :**
1)SUNDARAM, GANESH
2)FREEMAN, JOSHUA
3)SHANMUGAM, JANADASS

(57) Abstract :
An integrated, closed-loop, highly efficient renewable energy system comprises of at least one renewable energy processing unit (1100), at least one renewable energy processing unit having at least one heat generating subunit (1110, 1120, 1130, 1140,¦, n), at least one system control unit (1200), at least one thermal application unit (1400) having at least one thermal application subunit. The system control unit (1200) continuously monitors production of heat in heat generating subunits (1110, 1120, 1130, 1140,¦, n) of renewable energy processing unit (1100) to optimize the generation of the heat in varied operating conditions and also monitors the transfer of heat between renewable energy processing unit (1100) and thermal application unit (1400) to apportion heat in a manner so as to optimize use of heat by thermal application subunits, such that renewable energy system operates in a self-sustained and self-adaptive manner to obtain the highest achievable efficiency.

No. of Pages : 25 No. of Claims : 14

(12) PATENT APPLICATION PUBLICATION
(19) INDIA
(22) Date of filing of Application :18/02/2014

(21) Application No.809/CHE/2014 A
(43) Publication Date : 28/08/2015

(54) Title of the invention : INTENT-BASED METHOD AND SYSTEM FOR PROVIDING TRANSACTIONAL SECURITY

(51) International classification :G06F
(31) Priority Document No :NA
(32) Priority Date :NA
(33) Name of priority country :NA
(86) International Application No :NA
Filing Date :NA
(87) International Publication No : NA
(61) Patent of Addition to Application Number :NA
Filing Date :NA
(62) Divisional to Application Number :NA
Filing Date :NA

(71)**Name of Applicant :**
1)Indian Institute of Technology Madras
Address of Applicant :Indian Institute of Technology Madras (IIT Madras), IIT PO, Chennai - 600036 Tamil Nadu India
(72)**Name of Inventor :**
1)B Viswanathan

(57) Abstract :
The embodiments herein provide a method and system for controlling a transaction associated with an object. The method includes receiving a request to perform the transaction from a user, and determining a match between the request and an intent related to the transaction to be performed, wherein the intent is received prior to the transaction is carried out. Further, the method includes allowing the transaction in response to determining the match. FIG. 1

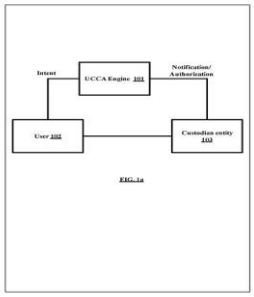

No. of Pages : 39 No. of Claims : 18

(12) PATENT APPLICATION PUBLICATION
(21) Application No.925/CHE/2014 A
(19) INDIA
(22) Date of filing of Application :24/02/2014
(43) Publication Date : 28/08/2015

(54) Title of the invention : A COMPOSITION FOR ENHANCED INHIBITION OF ACID INDUCED INTRACELLULAR PH CHANGES AND USES THEREOF

(51) International classification :A61K
(31) Priority Document No :NA
(32) Priority Date :NA
(33) Name of priority country :NA
(86) International Application No :NA
Filing Date :NA
(87) International Publication No : NA
(61) Patent of Addition to Application Number :NA
Filing Date :NA
(62) Divisional to Application Number :NA
Filing Date :NA

(71)**Name of Applicant :**
1)ITC LIMITED
Address of Applicant :ITC Life Sciences and Technology Centre, #3, 1st Main, Peenya Industrial Area, Phase 1, Bangalore 560058 Karnataka India
(72)**Name of Inventor :**
1)KAUSHAL, Deepti
2)KALSI, Gurpreet

(57) Abstract :
The present disclosure relates to a composition for the enhancement of inhibition of acid induced intracellular pH changes. The present disclosure also relates to a food supplement and a method for the inhibition of acid induced intracellular pH changes. In particular, the present disclosure relates to a composition comprising lactobacillus sp., streptococcus sp., and extracts.

No. of Pages : 25 No. of Claims : 10

(12) PATENT APPLICATION PUBLICATION
(21) Application No.926/CHE/2014 A
(19) INDIA
(22) Date of filing of Application :24/02/2014
(43) Publication Date : 28/08/2015

(54) Title of the invention : ARRANGEMENT COMPOSED OF A HOSE-LIKE HYDRAULIC LINE AND OF AN ELECTRICALLY CONDUCTIVE CONTACT ELEMENT

(51) International classification :F16L
(31) Priority Document No :102013204048.2
(32) Priority Date :08/03/2013
(33) Name of priority country :Germany
(86) International Application No :NA
Filing Date :NA
(87) International Publication No : NA
(61) Patent of Addition to Application Number :NA
Filing Date :NA
(62) Divisional to Application Number :NA
Filing Date :NA

(71)**Name of Applicant :**
1)FORD GLOBAL TECHNOLOGIES, LLC
Address of Applicant :Suite 800, 330 Town Center Drive, Dearborn, Michigan 48126, United States of America U.S.A.
(72)**Name of Inventor :**
1)FRANKE, Andreas

(57) Abstract :
The invention relates to an arrangement composed of a hose-like hydraulic line (13), which has an open free end (14) and is electrically conductive at least on the inside (15), and of an electrically conductive contact element (16), the contact element (16) being introduced at least partially into the open free end (14) of the line (13) so as to touch the inside (15) of said end.

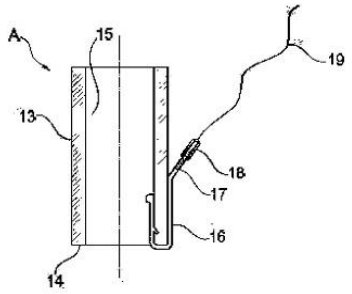

Fig. 2

No. of Pages : 15 No. of Claims : 7

(12) PATENT APPLICATION PUBLICATION
(19) INDIA
(22) Date of filing of Application :18/02/2014
(21) Application No.748/CHE/2014 A
(43) Publication Date : 28/08/2015

(54) Title of the invention : A SYSTEM FOR SUPPLYING AIR TO ONE OR MORE CABINETS FROM AN AIR CONDITIONING UNIT

(51) International classification :B21D
(31) Priority Document No :NA
(32) Priority Date :NA
(33) Name of priority country :NA
(86) International Application No :NA
Filing Date :NA
(87) International Publication No : NA
(61) Patent of Addition to Application Number :NA
Filing Date :NA
(62) Divisional to Application Number :NA
Filing Date :NA

(71)**Name of Applicant :**
1)LG ELECTRONICS INC.
Address of Applicant :20 Yeouido-dong, Yeongdeungpo-gu, Seoul, Republic of Korea. Republic of Korea
(72)**Name of Inventor :**
1)K SYED SAIFUDDIN
2)SUNIL SUTHAR

(57) Abstract :
Embodiments of the present disclosure relate to a system for supplying air to one or more cabinets from an air conditioning unit. The system comprises one or more cabinets, the air conditioning unit, at least one conduit and one or more valves. The cabinets are configured to receive air supply. The air conditioning unit is configured to supply air to the cabinets. The air condition unit comprises a processing unit to generate instructions for regulating the air supply to the cabinets based on one or more parameters associated with cabinets. The conduit has one end connectable to the air conditioning unit for accepting air from air conditioning unit and other end connectable to the one or more cabinets for delivering accepted air to cabinets. The one or more valves communicably connected to the processing unit to regulate air supply, based on instructions received from the processing unit. Figure 1

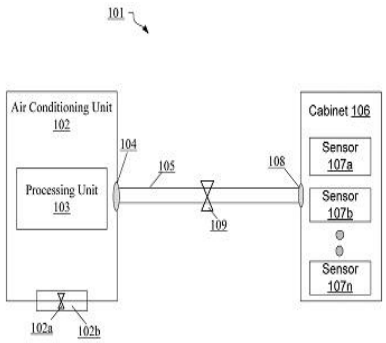

Figure 1

No. of Pages : 27 No. of Claims : 28

(12) PATENT APPLICATION PUBLICATION
(19) INDIA
(22) Date of filing of Application :19/02/2014
(21) Application No.788/CHE/2014 A
(43) Publication Date : 28/08/2015

(54) Title of the invention : A FUEL SUPPLY MODULE AND A METHOD FOR MANUFACTURING THE SAME

(51) International classification :C22C
(31) Priority Document No :NA
(32) Priority Date :NA
(33) Name of priority country :NA
(86) International Application No :NA
Filing Date :NA
(87) International Publication No : NA
(61) Patent of Addition to Application Number :NA
Filing Date :NA
(62) Divisional to Application Number :NA
Filing Date :NA

(71)**Name of Applicant :**
1)Bosch Limited
Address of Applicant :Post Box No 3000, Hosur Road, Adugodi, Bangalore 560030, Karnataka, INDIA Karnataka India
2)Robert Bosch GmbH
(72)**Name of Inventor :**
1)ANANTHA Prashanth
2)KARUPPAIAH Vikram

(57) Abstract :
The invention discloses a fuel supply module for controlling fuel flow to an engine and method to manufacture the same. The fuel supply module has encoded data matrix (M) corresponding to fuel flow characteristics inscribed on fuel supply module. Encoded data matrix being machine readable characteristics of a fuel supply module are measured for each fuel supply module manufactured. The measured fuel flow characteristics of the fuel supply module are encoded to form a data matrix which is inscribed on the fuel supply module. The inscribed encoded data matrix on the fuel supply module is scanned by a scanning means in communication with the engine ECU. The ECU decodes the data matrix to obtain fuel flow characteristics of the module which is stored in the ECU memory. The further operation of the engine is controlled based on these air flow characteristics stored in the memory. Reference figure: Figure 1

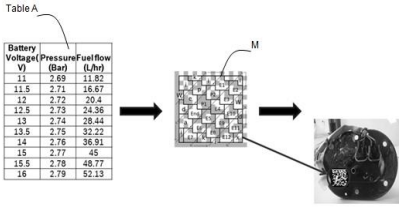

Battery Voltage(V)	Pressure (Bar)	Fuel flow (L/hr)
11	2.69	11.82
11.5	2.71	16.67
12	2.72	20.4
12.5	2.73	24.36
13	2.74	28.44
13.5	2.75	32.22
14	2.76	36.91
15	2.77	45
15.5	2.78	48.77
16	2.79	52.13

Fig. 1

No. of Pages : 13 No. of Claims : 10

(12) PATENT APPLICATION PUBLICATION
(21) Application No.977/CHE/2014 A
(19) INDIA
(22) Date of filing of Application :26/02/2014
(43) Publication Date : 28/08/2015

(54) Title of the invention : METHOD AND SYSTEM FOR OPTIMIZATION OF CONTINUOUS DIGESTER OPERATION

(51) International classification :G06F
(31) Priority Document No :NA
(32) Priority Date :NA
(33) Name of priority country :NA
(86) International Application No :NA
Filing Date :NA
(87) International Publication No : NA
(61) Patent of Addition to Application Number :NA
Filing Date :NA
(62) Divisional to Application Number :NA
Filing Date :NA

(71)**Name of Applicant :**
1)ABB TECHNOLOGY LTD.
Address of Applicant :AFFOLTERNSTRASSE 44, CH - 8050 ZURICH Switzerland
(72)**Name of Inventor :**
1)ABHIJIT BADWE
2)RAMESH SATINI

(57) Abstract :
A system and method for optimization of a continuous digester operation of a continuous digester are presented. The system includes a tracking module for tracking of process variables in the continuous digester operation and developing non-linear empirical model for one or more quality variables. A soft sensor module is used for deploying a soft sensor based on the non-linear empirical model and for generating soft measurements corresponding to the quality variables at different locations. A constraint management module is used for generating dynamically a set of constraints that are used by a model predictive controller for computing set points for optimization of continuous digester operation.

No. of Pages : 25 No. of Claims : 10

(12) PATENT APPLICATION PUBLICATION
(21) Application No.927/CHE/2014 A
(19) INDIA
(22) Date of filing of Application :25/02/2014
(43) Publication Date : 28/08/2015

(54) Title of the invention : ENHANCEMENT OF AUTHENTICATION AND INTEGRITY OF A SECURE COMMUNICATION IN A SECURE SHELL PROTOCOL (SSH)

(51) International classification :H04L
(31) Priority Document No :NA
(32) Priority Date :NA
(33) Name of priority country :NA
(86) International Application No :NA
Filing Date :NA
(87) International Publication No : NA
(61) Patent of Addition to Application Number :NA
Filing Date :NA
(62) Divisional to Application Number :NA
Filing Date :NA

(71)**Name of Applicant :**
1)Huawei Technologies India Pvt. Ltd.
Address of Applicant :No.23, Level 3 & 4, Leela Galleria, Airport Road, Bangalore-560017, India Karnataka India
(72)**Name of Inventor :**
1)Anand H D
2)Prabhat Kumar Gopalika
3)LUAN Shipeng

(57) Abstract :
Attached

No. of Pages : 32 No. of Claims : 48

(12) PATENT APPLICATION PUBLICATION
(21) Application No.980/CHE/2014 A
(19) INDIA
(22) Date of filing of Application :26/02/2014
(43) Publication Date : 28/08/2015

(54) Title of the invention : A NUTRITION COMPOSITION TO ENHANCE MEMORY POWER AND REDUCES BONE AILMENT

(51) International classification :A23L
(31) Priority Document No :NA
(32) Priority Date :NA
(33) Name of priority country :NA
(86) International Application No :NA
Filing Date :NA
(87) International Publication No : NA
(61) Patent of Addition to Application Number :NA
Filing Date :NA
(62) Divisional to Application Number :NA
Filing Date :NA

(71)**Name of Applicant :**
1)Shreyas.H.S
Address of Applicant :S/o Shivaramaiah. M, #2126/b, 6th cross, kuvempunagar, channapatna, Ramanagara District, Karnataka, India Karnataka India
(72)**Name of Inventor :**
1)Shreyas.H.S

(57) Abstract :
The present invention relates to a nutrition rich composition for children/beings to enhance memory, growing power and decreases bone ailment. In one embodiment the effective amount of nutrition rich composition comprising: garlic mustard greens, horse gram, fried ragi, ground nut and Jaggery.

No. of Pages : 19 No. of Claims : 10

(12) PATENT APPLICATION PUBLICATION
(21) Application No.6326/CHENP/2011 A
(19) INDIA
(22) Date of filing of Application :05/09/2011
(43) Publication Date : 28/08/2015

(54) Title of the invention : SMOOTH, STATELESS CLIENT MEDIA STREAMING

(51) International classification :H04L12/56
(31) Priority Document No :12/405,215
(32) Priority Date :16/03/2009
(33) Name of priority country :U.S.A.
(86) International Application No :PCT/US2010/026707
Filing Date :09/03/2010
(87) International Publication No :WO 2010/107625 A2
(61) Patent of Addition to Application Number :NA
Filing Date :NA
(62) Divisional to Application Number :NA
Filing Date :NA

(71)**Name of Applicant :**
1)MICROSOFT CORPORATION
Address of Applicant :ONE MICROSOFT WAY, REDMOND, WASHINGTON 98052-6399 U.S.A.
(72)**Name of Inventor :**
1)SOOD VISHAL
2)FREELANDER, JACK E
3)ROY, ANIRBAN
4)LIU, LIN
5)ZHANG, GEQIANG (SAM)
6)DUGGARAJU, KRISHNA PRAKASH
7)SIRIVARA, SUDHEER
8)BOCHAROV, JOHN, A

(57) Abstract :
An adaptive streaming system is described herein that provides a stateless connection between the client and server for streaming media playback in which the data is formatted in a manner that allows the client to make decisions and react more quickly to changing network conditions. The client requests uniform chunks of media from te server that include a portion of the media. The adaptive streaming system requests portions of a media file or of a live streaming event in small-sized chunks each having a distinguished URL. This allows streaming media data to be cached by existing Internet cache infrastructure. Each chunk contains metadata information that describes the encoding of the chunk and media content for playback by the client. The server may provide chunks in multiple encodings so that the client can switch quickly to chunks of a different bit rate or playback speed. Fig. 1

No. of Pages : 24 No. of Claims : 15

(12) PATENT APPLICATION PUBLICATION
(19) INDIA
(22) Date of filing of Application :21/02/2014

(21) Application No.879/CHE/2014 A
(43) Publication Date : 28/08/2015

(54) Title of the invention : FIBER MILLING EQUIPMENT

(51) International classification :B23C5/00
(31) Priority Document No :NA
(32) Priority Date :NA
(33) Name of priority country :NA
(86) International Application No :NA
Filing Date :NA
(87) International Publication No : NA
(61) Patent of Addition to Application Number :NA
Filing Date :NA
(62) Divisional to Application Number :NA
Filing Date :NA

(71)**Name of Applicant :**
1)INDIAN SPACE RESEARCH ORGANISATION
Address of Applicant :DEPARTMENT OF SPACE, ANTARIKSH BHAVAN, NEW BEL ROAD, BANGALORE - 560 094 Karnataka India
(72)**Name of Inventor :**
1)THAKUR SUDESH KUMAR RAUNIJA
2)SANKARANARAYANA BABU
3)VISWANATHAN VISWABASKARAN

(57) Abstract :
The invention is in the field of fiber milling equipments, and relates to the milling of continuous fibers in to very short length discrete fibers, and more specifically to equipment for the milling of carbon fibers used as reinforcement in the fabrication of carbon/carbon (C/C) composites. The invention solves the interrupted feeding of multiple tows and produces milled fibers of uniform length by achieving close tolerance. The incorporation of the liquid bath, the filament breaker cum sucker unit and the carbide tip at the base of both the stationary blade and moving blade resulted in feeding the multiple tows uninterruptedly and milling the fibers to uniform length. Fig. 1

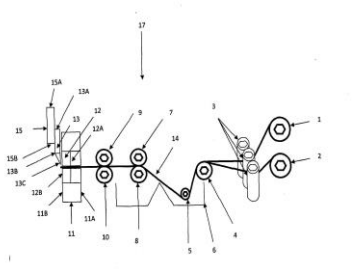

Fig.1

No. of Pages : 18 No. of Claims : 9

(12) PATENT APPLICATION PUBLICATION
(19) INDIA
(22) Date of filing of Application :09/07/2013

(21) Application No.3069/CHE/2013 A
(43) Publication Date : 28/08/2015

(54) Title of the invention : SYSTEM AND METHOD FOR ZOOM AND PAN IN PULL-BASED STREAMING OF MULTIMEDIA CONTENT

(51) International classification :G06T3/00
(31) Priority Document No :NA
(32) Priority Date :NA
(33) Name of priority country :NA
(86) International Application No :NA
Filing Date :NA
(87) International Publication No : NA
(61) Patent of Addition to Application Number :NA
Filing Date :NA
(62) Divisional to Application Number :NA
Filing Date :NA

(71)**Name of Applicant :**
1)SAMSUNG INDIA SOFTWARE OPERATIONS PVT LTD
Address of Applicant :BAGMANE LAKEVIEW, BLOCK B, NO. 66/1, BAGMANE TECH PARK, CV RAMAN NAGAR, BYRASANDRA, BANGALORE - 560 093 Karnataka India
(72)**Name of Inventor :**
1)RAVINDRA GUNTUR
2)MAHESH KRISHNANANDA PRABHU
3)VIDHU BENNIE THOLATH
4)VISHWANATH MADAPURA GANGARAJU

(57) Abstract :
A method and device for rendering a selected portion in a video displayed in a higher resolution in a pull-based streaming is disclosed. When a user selects a portion of the video at a first resolution, the electronic device identifies display coordinates associated with the video played at the first resolution. The identified display coordinates associated with the video is scaled to a second resolution of a frame of the video. Once the display coordinates are scaled in accordance to the second resolution of the video, the device is configured to identify at least one tile associated with the selected portion in the second resolution. After identifying the tile associated with the selected portion, the device receives a video stream of the selected portion of the video and renders the selected portion on the device. FIG. 2

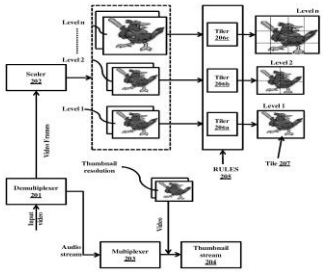

No. of Pages : 58 No. of Claims : 22

(12) PATENT APPLICATION PUBLICATION
(21) Application No.502/CHE/2014 A
(19) INDIA
(22) Date of filing of Application :04/02/2014
(43) Publication Date : 28/08/2015

(54) Title of the invention : VENTILATION AIDING STRUCTURE FOR A SCOOTER TYPE VEHICLES

(51) International classification :B62K3/00
(31) Priority Document No :NA
(32) Priority Date :NA
(33) Name of priority country :NA
(86) International Application No :NA
Filing Date :NA
(87) International Publication No : NA
(61) Patent of Addition to Application Number :NA
Filing Date :NA
(62) Divisional to Application Number :NA
Filing Date :NA

(71)**Name of Applicant :**
1)TVS MOTOR COMPANY LIMITED
Address of Applicant :JAYALAKSHMI ESTATES • NO.29 (OLD NO.8 HADDOWS ROAD, CHENNAI 600 006 Tamil Nadu India
(72)**Name of Inventor :**
1)AMEY DHURI
2)PRASHANTH C
3)HIRAN KUMAR K C
4)KIRAN PAYANGAPPADAN

(57) Abstract :
Described invention discloses a ventilation aiding system that is an opening in the side part of the front panel. Through this opening air enters and flows to the engine. Said opening is designed in such a way that it remains above the level of water splashing from the road. Further the water coming from above the vehicle like during rain or clearing of the vehicle slips down from the outer cavity of the opening and does not reach to the inner cavity of the air opening. This system helps in preventing entry of foreign elements which affects the cooling efficiency of the vehicle. To be accompanied with Figure 2

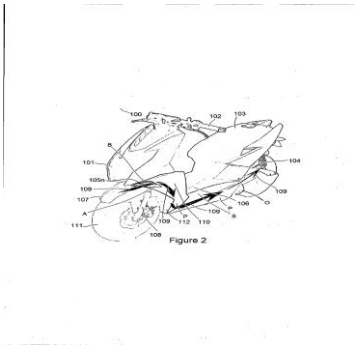

No. of Pages : 11 No. of Claims : 7

(12) PATENT APPLICATION PUBLICATION
(19) INDIA
(22) Date of filing of Application :13/11/2013
(21) Application No.5149/CHE/2013 A
(43) Publication Date : 28/08/2015

(54) Title of the invention : A FLUID TRANSFERRING DEVICE

(51) International classification :B65D83/00
(31) Priority Document No :NA
(32) Priority Date :NA
(33) Name of priority country :NA
(86) International Application No :NA
Filing Date :NA
(87) International Publication No : NA
(61) Patent of Addition to Application Number :NA
Filing Date :NA
(62) Divisional to Application Number :NA
Filing Date :NA

(71)**Name of Applicant :**
1)STEMPEUTICS RESEARCH PRIVATE LIMITED
Address of Applicant :Akshay Tech Park, 72&73, 2nd Floor EPIP Zone, Phase 1- Area Whitefield, Bangalore 560066, Karnataka, India. Karnataka India
(72)**Name of Inventor :**
1)Murali Cherat
2)Swathi Sundar Raj
3)Anish Sen Majumdar
4)Abhijeet Deshmukh
5)Manjunath Byalappa Sathya Kumar
6)Prajod Thiruvampattil Lohidhakshan

(57) Abstract :
A fluid transferring device comprising at least one dispensing container and at least one receiving container coupled to a first robotic assembly and a second robotic assembly respectively. First robotic assembly is configured to revolve the at least one dispensing container in a horizontal rotary axis towards each of the at least one receiving container. The second robotic assembly is configured to traverse the at least one receiving container towards the at least one dispensing container. Aligning and mating a dispensing port of the at least one dispensing container with an inlet port of the at least one receiving container. At least one valve mechanism installed at neck portion of the at least one dispensing container and the at least one receiving container for regulating flow of at least one of fluids such as biological tissue fluid, buffer solutions, enzymes and reagents.

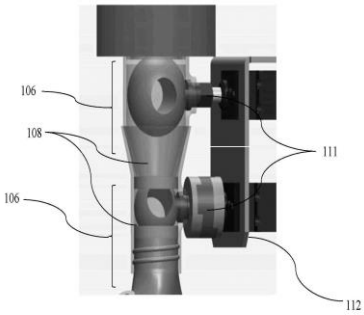

Figure 2

No. of Pages : 20 No. of Claims : 8

(12) PATENT APPLICATION PUBLICATION
(21) Application No.983/CHE/2014 A
(19) INDIA
(22) Date of filing of Application :26/02/2014
(43) Publication Date : 28/08/2015

(54) Title of the invention : A COMPOSITION AND METHOD FOR ENHANCED VITAMIN B12 PRODUCTION IN MICROBES AND USES THEREOF

(51) International classification	:A23L 1/00	
(31) Priority Document No	:NA	
(32) Priority Date	:NA	
(33) Name of priority country	:NA	
(86) International Application No	:NA	
Filing Date	:NA	
(87) International Publication No	: NA	
(61) Patent of Addition to Application Number	:NA	
Filing Date	:NA	
(62) Divisional to Application Number	:NA	
Filing Date	:NA	

(71)**Name of Applicant :**
1)ITC LIMITED
Address of Applicant :ITC-LIFE SCIENCE AND TECHNOLOGY CENTER #3, 1st Main, Peenya Industrial area, Phase 1, Bangalore 560 058 Karnataka India
(72)**Name of Inventor :**
1)KALSI, Gurpreet
2)KAUSHAL, Deepti
3)MAKHAL, Subarna
4)LAKSHMANAN, Chandrasekharan Chittur

(57) Abstract :
The present disclosure relates to a composition and method comprising prebiotics for enhanced vitamin B12 production by microbes. The disclosure also provides composition and method of enhancing short chain fatty acids production, and enhanced probiotic growth. Also provided are food formulations, and food supplements that enhance the desired characteristics of probiotic microbes.

No. of Pages : 23 No. of Claims : 18

(12) PATENT APPLICATION PUBLICATION
(21) Application No.880/CHE/2014 A
(19) INDIA
(22) Date of filing of Application :21/02/2014
(43) Publication Date : 28/08/2015

(54) Title of the invention : NOISE FREE VEHICULAR HORN (V-HORN)

(51) International classification :H01Q
(31) Priority Document No :NA
(32) Priority Date :NA
(33) Name of priority country :NA
(86) International Application No :NA
Filing Date :NA
(87) International Publication No : NA
(61) Patent of Addition to Application Number :NA
Filing Date :NA
(62) Divisional to Application Number :NA
Filing Date :NA

(71)**Name of Applicant :**
1)VASUDEVAN TACHOTH
Address of Applicant :DOOR NO. 1 & 2, PRIVATE INDUSTRIAL ESTATE, KURUCHI, COIMBATORE - 641 021 Tamil Nadu India
(72)**Name of Inventor :**
1)VASUDEVAN TACHOTH

(57) Abstract :
Noise Pollution is one among the alarming environmental problems much like water and air pollution. Sounds from the horns of the vehicles are one of the major reasons for noise pollution. Almost three decades back when I was a higher secondary student, I used to get irritated by the vehicular horns. A thought flashed my mind and I designed a wireless horn with my insufficient technical knowledge and I named the system as V-Horn to reduce noise pollution, due to variety of reason practically I couldnt execute the same those days. Speciality of V-Horn is if the V-Horn is blown by a driver of vehicles which is audible to the driver of the nearby vehicles. So that it will not disturb anyone else. V-Horn comprises of transmitter, receiver and a low decibel convention horn. This concept will be practical in case, if the government make it mandatory in all vehicles. V-horn is used to alert the vehicle drivers only. It will not disturb the passengers, pedestrians or even any activities of the nature. If V-horn system is used no need of high decibel audible horn is required. It will reduce the noise from the vehicle horn and minimize the accident -v ft

No. of Pages : 20 No. of Claims : 1

(12) PATENT APPLICATION PUBLICATION
(21) Application No.984/CHE/2014 A
(19) INDIA
(22) Date of filing of Application :27/02/2014
(43) Publication Date : 28/08/2015

(54) Title of the invention : STABLE PHARMACEUTICAL COMPOSITION OF TENOFOVIR DISOPROXIL

(51) International classification :A61K31/00
(31) Priority Document No :NA
(32) Priority Date :NA
(33) Name of priority country :NA
(86) International Application No :NA
Filing Date :NA
(87) International Publication No : NA
(61) Patent of Addition to Application Number :NA
Filing Date :NA
(62) Divisional to Application Number :NA
Filing Date :NA

(71)**Name of Applicant :**
1)AIZANT DRUG RESEARCH SOLUTIONS PRIVATE LIMITED
Address of Applicant :SY NO. 172 & 173, APPAREL PARK ROAD, DULAPALLY VILLAGE, QUTHUBULLAPUR MANDAL, HYDERABAD - 500 014 Andhra Pradesh India
(72)**Name of Inventor :**
1)PAVAN KUMAR ALLURI
2)SUSHEEL PRAKASH UPPALA
3)MASTANAIAH THUMMISETTY
4)RAGHUPATHI KANDARAPU
5)VARMA S. RUDRARAJU

(57) Abstract :
The present invention relates to a stable pharmaceutical composition comprising an active agent containing effective amount of tenofovir disoproxil or a pharmaceutically acceptable salt thereof and an acidic compound and processes for preparing the same. The pharmaceutical composition may optionally contain other anti-HIV drugs.

No. of Pages : 20 No. of Claims : 12

(12) PATENT APPLICATION PUBLICATION
(21) Application No.4103/CHE/2013 A
(19) INDIA
(22) Date of filing of Application :12/09/2013
(43) Publication Date : 28/08/2015

(54) Title of the invention : LANTHANUM DOPING OF CERIA ABRASIVE TO OBTAIN ROBUST CMP POLISH RATES

(51) International classification :C09G
(31) Priority Document No :NA
(32) Priority Date :NA
(33) Name of priority country :NA
(86) International Application No :NA
Filing Date :NA
(87) International Publication No : NA
(61) Patent of Addition to Application Number :NA
Filing Date :NA
(62) Divisional to Application Number :NA
Filing Date :NA

(71)**Name of Applicant :**
1)INDIAN INSTITUTE OF TECHNOLOGY MADRAS
Address of Applicant :IIT P.O, CHENNAI 600 036 Tamil Nadu India
(72)**Name of Inventor :**
1)BULUSU VENKATA SESHA PRAVEEN
2)RAMACHANDRAN MANIVANNAN
3)TRILICANE DWARAKANATHAN UMASHANKAR
4)BYOUNG-JUN CHO
5)JIN, GOO PARK
6)SRINIVASAN RAMANATHAN

(57) Abstract :
This invention relates to a method of chemical mechanical planarization for silicon abrasive pads are fixed on wafers, which contains ceria and lanthanum and/or polishing slurry of 7 PH having abrasive which is ceria and containing lanthanum and further the ceria may be of nano particle, or micro particle.

No. of Pages : 22 No. of Claims : 11

(12) PATENT APPLICATION PUBLICATION
(21) Application No.6037/CHE/2013 A
(19) INDIA
(22) Date of filing of Application :23/12/2013
(43) Publication Date : 28/08/2015

(54) Title of the invention : SYSTEM AND METHOD FOR MONITORING HEALTH CONDITION OF A USER USING A PORTABLE HEALTH MONITORING DEVICE

(51) International classification	:A61B5/00	(71)**Name of Applicant :**
(31) Priority Document No	:NA	**1)AZOI INC.**
(32) Priority Date	:NA	Address of Applicant :418 KOSCIUSKO AVE SOUTH PLAINFIELD, NEW JERSEY 07080-3961, USA U.S.A.
(33) Name of priority country	:NA	(72)**Name of Inventor :**
(86) International Application No	:NA	**1)Hamish Patel**
Filing Date	:NA	
(87) International Publication No	: NA	
(61) Patent of Addition to Application Number	:NA	
Filing Date	:NA	
(62) Divisional to Application Number	:NA	
Filing Date	:NA	

(57) Abstract :
A method for monitoring health condition of a user with a portable health monitoring unit is provided. The method includes (i) receiving, at the portable health monitoring unit, at least one request to record at least one vital sign associated with the user, (ii) dynamically obtaining, by at least one sensor, the at least one vital sign upon hand of the user is placed on the portable health monitoring unit which is placed at close proximity of the computing device, (iii) communicating, the at least one vital sign associated with the user to the computing device, (iv) processing, by a health monitoring application, the at least one vital sign associated with the user to obtain a graphical representation, and (v) displaying health condition associated with the user in the graphical representation format. The graphical representation includes a health analysis chart associated with the user.

No. of Pages : 28 No. of Claims : 10

(12) PATENT APPLICATION PUBLICATION
(21) Application No.774/CHE/2014 A
(19) INDIA
(22) Date of filing of Application :18/02/2014
(43) Publication Date : 28/08/2015

(54) Title of the invention : MULTI SPINDLE MULTI COMPONENT APPARATUS

(51) International classification :B23Q
(31) Priority Document No :NA
(32) Priority Date :NA
(33) Name of priority country :NA
(86) International Application No :NA
Filing Date :NA
(87) International Publication No : NA
(61) Patent of Addition to Application Number :NA
Filing Date :NA
(62) Divisional to Application Number :NA
Filing Date :NA

(71)**Name of Applicant :**
1)RAMESH BABU.R
Address of Applicant :no-13.Sathyanarayana Temple street,1st floor precision foto type services,Near Gupta layout,Halasuru,Bangalore-560008. Karnataka,India. Karnataka India
(72)**Name of Inventor :**
1)RAMESH BABU.R

(57) Abstract :
ABSTRACT This Invention relates to Multispindle multicomponent apparatus which comprises a mainhousing (3) that is screw locked (13) with machine spindle and held stationary while operation . Multiple components can be gripped in a single set-up. Apart from Cylindrical components like Fig1, with the provision of Optional Roller cage arrangement (B) Profile component™s (Gears) also can be gripped like in Fig 2.The main housing(1) comprises a miniaturepowerpacksystem(8) which transmits pressure through cylindrical connector hole to the gripend(5) to grip the components with hydrostatic pressure to perform operations like machining, grinding by the profile shrinkring(4) by means of thermo polymer(10) .The shrinkring(4) is shrunk fitted to form the collector (6) around it which is concentric machine spindle and central axis(16). The body base(1) ,mainhousing (3) and Gripend (5) are all made of a single solid metal element as single piece construction .Gripping length compensators(11) being used for shorter length components. With optional straight spindle collets/DA collets(A) helps to increase over size components up to 100 microns.

No. of Pages : 30 No. of Claims : 10

(12) PATENT APPLICATION PUBLICATION
(21) Application No.775/CHE/2014 A
(19) INDIA
(22) Date of filing of Application :18/02/2014
(43) Publication Date : 28/08/2015

(54) Title of the invention : MULTI PURPOSE ROTARY GRIP APPARATUS

(51) International classification :B23Q
(31) Priority Document No :NA
(32) Priority Date :NA
(33) Name of priority country :NA
(86) International Application No :NA
Filing Date :NA
(87) International Publication No : NA
(61) Patent of Addition to Application Number :NA
Filing Date :NA
(62) Divisional to Application Number :NA
Filing Date :NA

(71)**Name of Applicant :**
1)RAMESH BABU.R
Address of Applicant :no:13.Sathyanarayana Temple street,1st floor precision foto type services,Near Gupta layout,Halasuru,Bangalore-560008.Karnataka,India. Karnataka India
(72)**Name of Inventor :**
1)RAMESH BABU.R

(57) Abstract :
This Invention relates to multipurpose Rotarygripapparatus which comprises main Body(1) with precision spindlebearing(17) engaged with Main housing(3) to enable it to rotate free with reference to axis (16) .Apart from gripping cylindrical components , with the use of Roller cage arrangement (B) it can grip gears /splines /Sprockets/Rotors,etc. The main housing(3) comprises miniature powerpacksystem(8) which transmits pressure through thermopolymer (10) filled in cylindrical connector hole to the shrinkring(4) which is shrunk fitted to the mainhousing and concentric to central axis (16) . The shrinkring(4) grips the component at gripend(5) by Hydrostatic pressure . Gripping length compensators (11) being used for shorter length components. Over size components up to 100 microns can be gripped using standard straight spindle collets/DA collets(A). Air relief hole(21) is provided to avoid airlock. This apparatus is vital for inspection of blind hole components . Once the spindle bearings are dismantled from main body (1) this apparatus can be very well mounted with machine spindle and used to carry out various machining & grinding operations also like turning,milling,drilling,boring,reaming,facing,cylindrical grinding and surface grinding,etc.

No. of Pages : 29 No. of Claims : 10

(12) PATENT APPLICATION PUBLICATION
(21) Application No.987/CHE/2014 A
(19) INDIA
(22) Date of filing of Application :27/02/2014
(43) Publication Date : 28/08/2015

(54) Title of the invention : A SUPPLEMENT TABLET TO REDUCE FREE RADICAL DAMAGE

(51) International classification :A61K
(31) Priority Document No :NA
(32) Priority Date :NA
(33) Name of priority country :NA
(86) International Application No :NA
Filing Date :NA
(87) International Publication No : NA
(61) Patent of Addition to Application Number :NA
Filing Date :NA
(62) Divisional to Application Number :NA
Filing Date :NA

(71)**Name of Applicant :**
1)Shreyas.H.S
Address of Applicant :S/o Shivaramaiah. M, #2126/b, 6th cross, kuvempunagar, channapatna, Ramanagara District, Karnataka, India Karnataka India
(72)**Name of Inventor :**
1)Shreyas.H.S

(57) Abstract :
Abstract The present invention relates to a supplement tablet and capsule which controls free radical problems. In one embodiment, the supplement tablet/capsule comprising garlic mustard greens/plants and gooseberry

No. of Pages : 14 No. of Claims : 8

(12) PATENT APPLICATION PUBLICATION
(21) Application No.4330/CHE/2013 A
(19) INDIA
(22) Date of filing of Application :24/09/2013
(43) Publication Date : 28/08/2015

(54) Title of the invention : TOFACITINIB CITRATE PROCESS AND POLYMORPHS

(51) International classification :C07D
(31) Priority Document No :NA
(32) Priority Date :NA
(33) Name of priority country :NA
(86) International Application No :NA
Filing Date :NA
(87) International Publication No : NA
(61) Patent of Addition to Application Number :NA
Filing Date :NA
(62) Divisional to Application Number :NA
Filing Date :NA

(71)**Name of Applicant :**
1)Dr. Reddys Laboratories Limited
Address of Applicant :8-2-337, Road No. 3, Banjara hills, Hyderabad, Andhra Pradesh, India. Andhra Pradesh India
(72)**Name of Inventor :**
1)Peddy Vishweshwar
2)Srinivas Enugula
3)Javed Iqbal
4)Srinivas Oruganti
5)Bhaskar Kandagatla

(57) Abstract :
The present application relates to process for the preparation of Tofacitinib (or) salt thereof and process for the preparation of crystalline form of Tofacitinib citrate.

No. of Pages : 30 No. of Claims : 10

(12) PATENT APPLICATION PUBLICATION
(21) Application No.5282/CHE/2013 A
(19) INDIA
(22) Date of filing of Application :18/11/2013
(43) Publication Date : 28/08/2015

(54) Title of the invention : PREPARATION OF AMORPHOUS AND FORM-3 OF RALTEGRAVIR POTASSIUM

(51) International classification	:C07D	(71)**Name of Applicant :**
(31) Priority Document No	:NA	**1)Dr. Reddy™s Laboratories Limited**
(32) Priority Date	:NA	Address of Applicant :8-2-337, Road No. 3, Banjara Hills,
(33) Name of priority country	:NA	Hyderabad, Andhra Pradesh, India Andhra Pradesh India
(86) International Application No	:NA	(72)**Name of Inventor :**
Filing Date	:NA	**1)Boge Rajesham**
(87) International Publication No	: NA	**2)Chennuru Ramanaiah**
(61) Patent of Addition to Application Number	:NA	
Filing Date	:NA	
(62) Divisional to Application Number	:NA	
Filing Date	:NA	

(57) Abstract :
The present application relates to processes for the preparation of amorphous Raltegravir potassium and Raltegravir potassium Form-3.

No. of Pages : 13 No. of Claims : 8

(12) PATENT APPLICATION PUBLICATION
(21) Application No.776/CHE/2014 A
(19) INDIA
(22) Date of filing of Application :18/02/2014
(43) Publication Date : 28/08/2015

(54) Title of the invention : MULTI PURPOSE ROTARY GRIP APPARATUS

(51) International classification	:B23Q	(71)**Name of Applicant :**
(31) Priority Document No	:NA	**1)RAMESH BABU.R**
(32) Priority Date	:NA	Address of Applicant :no:13.Sathyanarayana Temple street,1st floor precision foto type services ,Near Gupta layout,Halasuru ,Bangalore-560008.Karnataka,India. Karnataka India
(33) Name of priority country	:NA	
(86) International Application No	:NA	
Filing Date	:NA	(72)**Name of Inventor :**
(87) International Publication No	: NA	**1)RAMESH BABU.R**
(61) Patent of Addition to Application Number	:NA	
Filing Date	:NA	
(62) Divisional to Application Number	:NA	
Filing Date	:NA	

(57) Abstract :
This Invention relates to multipurpose Rotarygripapparatus which comprises main Body(1) with precision spindlebearing(17) engaged with Main housing(3) to enable it to rotate free with reference to axis (16) .APrt from gripping cylindrical components , with the use of Roller cage arrangement (B) it can grip gears /splines /Sprockets/Rotors,etc.The main housing(3) comprises miniature powerpacksystem(8) which transmits pressure through thermopolymer (10) filled in cylindrical connector hole to the shrinkring(4) which is shrunk fitted to the mainhousing and concentric to central axis (16). The shrinkring(4) grips the component at gripend(5) by Hydrostatic pressure . Gripping length compensators (11) being used for shorter length components. Over size components up to 100 microns can be gripped using standard straight spindle collets/DA collets(A). Air relief hole(21) is provided to avoid airlock. This apparatus is vital for inspection of blind hole components . Once the spindle bearings are dismantled from main body (1) this apparatus can be very well mounted with machine spindle and used to carry out various machining & grinding operations also like turning,milling,drilling,boring,reaming,facing,cylindrical grinding and surface grinding,etc.

No. of Pages : 31 No. of Claims : 10

(12) PATENT APPLICATION PUBLICATION
(19) INDIA
(22) Date of filing of Application :25/02/2014

(21) Application No.933/CHE/2014 A
(43) Publication Date : 28/08/2015

(54) Title of the invention : A METHOD FOR PERIODIC UPDATE OF LOCATION OF A MTC DEVICE IN A WIRELESS NETWORK

(51) International classification	:H04W 60/00	(71)**Name of Applicant :**
(31) Priority Document No	:NA	**1)Samsung R & D Institute India- Bangalore Private Limited**
(32) Priority Date	:NA	Address of Applicant :# 2870, Orion Building, Bagmane
(33) Name of priority country	:NA	Constellation Business Park, Outer Ring Road, Doddanekundi Circle,
(86) International Application No	:NA	Marathahalli Post, Bangalore-560037 Karnataka India
Filing Date	:NA	(72)**Name of Inventor :**
(87) International Publication No	: NA	**1)Shrinath Ramamoorthy**
(61) Patent of Addition to Application Number	:NA	**2)Srinivas Chinthalapudi**
Filing Date	:NA	
(62) Divisional to Application Number	:NA	
Filing Date	:NA	

(57) Abstract :
A method and system for periodic update of a location of a Machine Type Communication (MTC) device in a wireless network is provided. The method includes initiating a Radio Resource Connection request with a cause indicating periodic registration through AS signaling by the MTC device to the wireless network. Further, the method includes triggering a Service Request procedure by the MTC device upon NAS indication of periodic registration timer expiry for periodic update of location of the MTC device. Furthermore, the method includes triggering a paging message by the wireless network upon expiration of the periodic registration timer for period update of location of the MTC device. FIG. 11

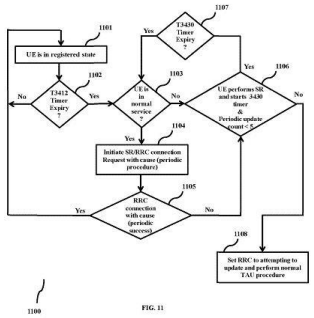

FIG. 11

No. of Pages : 47 No. of Claims : 13

(12) PATENT APPLICATION PUBLICATION
(21) Application No.959/CHE/2014 A
(19) INDIA
(22) Date of filing of Application :26/02/2014
(43) Publication Date : 28/08/2015

(54) Title of the invention : POLYHERBAL ORODISPERSIBLE FORMULATIONS CONTAINING MOUTH-FRESHENER

(51) International classification :A61K9/00
(31) Priority Document No :NA
(32) Priority Date :NA
(33) Name of priority country :NA
(86) International Application No :NA
Filing Date :NA
(87) International Publication No : NA
(61) Patent of Addition to Application Number :NA
Filing Date :NA
(62) Divisional to Application Number :NA
Filing Date :NA

(71)**Name of Applicant :**
1)A.R. KULKARNI
Address of Applicant :SONIYA COLLEGE OF PHARMACY, S.R. NAGAR, DHARWAD - 580 002 Karnataka India
2)B.S. PATIL
3)B.H. YENNI
(72)**Name of Inventor :**
1)A.R. KULKARNI
2)B.S. PATIL
3)B.H. YENNI

(57) Abstract :
The invention is about to produce orodispersible tablets containing various naturally occurring mouth fresheners extracted from fennel {Foeniculum vulgare Mill, of family umbeliferae), ginger {Zingiber officinale Roscoe of family Zingiberaceae) and cardamom {Elettaria cardamomum Motanvar of family Zingiberaceae). The developed formulations are elegant in the form of solid unit dosage forms which are easy to handle and can be packed in to attractive blister or strip packs. Traditionally used crude drugs such as fennel, cardamom, ginger, clove etc., are made available in the form of orodispersible tablets so as to increase their stability. The novel formulations have potential advantages over conventional dosage forms, with their improved patient compliance, convenience, bioavailability and rapid onset of action. Orodispersible tablet formulations have sufficient mechanical strength, quick disintegration/dissolution in the mouth without water. Volatile oils from respective drugs were isolated by Hydrodistillation method using Clevengers apparatus using water as a solvent. The yield of volatile oil obtained from fennel was 0.43%w/v, from cardamom was 8.50%w/v and from ginger was 0.64%w/v. Extracted oils were dispersed with mannitol using alcohol and used for direct punching using superdisintegrants, viz., sodium starch glycolate. The prepared batches of tablets were evaluated for thickness, weight variation, hardness, friability and in-vitro disintegration time. Based on actual disintegration followed by dissolution of tablet in a glass was measured in-vitro disintegration time.

No. of Pages : 12 No. of Claims : 2

(12) PATENT APPLICATION PUBLICATION
(21) Application No.5156/CHE/2013 A
(19) INDIA
(22) Date of filing of Application :13/11/2013
(43) Publication Date : 28/08/2015

(54) Title of the invention : A COMPOSITION, DEVICE OR A TRAP AND METHODS THEREOF

(51) International classification :A01N37/00
(31) Priority Document No :NA
(32) Priority Date :NA
(33) Name of priority country :NA
(86) International Application No :NA
Filing Date :NA
(87) International Publication No : NA
(61) Patent of Addition to Application Number :NA
Filing Date :NA
(62) Divisional to Application Number :NA
Filing Date :NA

(71)**Name of Applicant :**
1)JAWAHARLAL NEHRU CENTRE FOR ADVANCED SCIENTIFIC RESEARCH
Address of Applicant :Jakkur, Bangalore 560064, Karnataka, India Karnataka India
2)CENTRAL PLANTATION CROPS RESEARCH INSTITUTE
(72)**Name of Inventor :**
1)MUTHUSAMY ESWARAMOORTHY
2)KESAVAN SUBAHARAN
3)BOSUKONDA VEERA VENKATA SURYA PAVAN KUMAR

(57) Abstract :
The present disclosure relates to a composition comprising ordered mesoporous silica, semiochemical and antioxidant, optionally along with additive. The present disclosure provides for a dispenser/substrate capable of releasing semiochemicals from substrate at a controlled rate and thus aiding in attracting insect pests, without polluting the environment.

No. of Pages : 52 No. of Claims : 26

(12) PATENT APPLICATION PUBLICATION
(19) INDIA
(22) Date of filing of Application :20/12/2013
(21) Application No.5968/CHE/2013 A
(43) Publication Date : 28/08/2015

(54) Title of the invention : DESALINATION SYSTEM AND METHOD

(51) International classification :C02F
(31) Priority Document No :NA
(32) Priority Date :NA
(33) Name of priority country :NA
(86) International Application No :NA
Filing Date :NA
(87) International Publication No : NA
(61) Patent of Addition to Application Number :NA
Filing Date :NA
(62) Divisional to Application Number :NA
Filing Date :NA

(71)**Name of Applicant :**
1)General Electric Company
Address of Applicant :1 River Road, Schenectady, New York 12345, U.S.A U.S.A.
(72)**Name of Inventor :**
1)RADHAKRISHNAN, Jayaprakash Sandhala
2)PRASAD, Vijaysai
3)SIM, Graham
4)KOTA, Siva Kumar
5)ZEPEDA, Juan Alfredo
6)KASHYAP, Sudhanshu
7)CHAKRABORTY, Soumik
8)GNANASAMBANDAM, Sivashangari

(57) Abstract :
The present disclosure provides a desalination system that includes a desalination unit that receives a first stream for desalination and a second stream to carry away ions removed from the first stream. A precipitation unit is in fluid communication with the desalination unit and circulates the second stream to the desalination unit. The system also (a) includes a pre-treatment unit upstream of the desalination unit that receives a feed stream and at least one pre-treatment chemical, and produces an ion-reduced first stream for the desalination unit; (b) adds lime into the precipitation unit, or into the second stream passing through the precipitation unit; and/or (c) includes a membrane-based purification device that receives a desalinated output stream from the desalination unit.

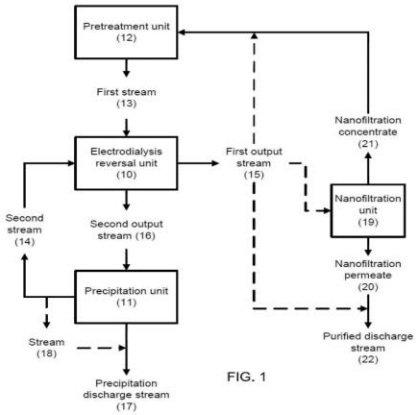

FIG. 1

No. of Pages : 55 No. of Claims : 66

(12) PATENT APPLICATION PUBLICATION
(21) Application No.355/CHE/2014 A
(19) INDIA
(22) Date of filing of Application :28/01/2014
(43) Publication Date : 28/08/2015

(54) Title of the invention : COMPUTER CONTROLLED OCCUPANCY SENSORS SYSTEM

(51) International classification :G06f
(31) Priority Document No :NA
(32) Priority Date :NA
(33) Name of priority country :NA
(86) International Application No :NA
Filing Date :NA
(87) International Publication No : NA
(61) Patent of Addition to Application Number :NA
Filing Date :NA
(62) Divisional to Application Number :NA
Filing Date :NA

(71)**Name of Applicant :**
1)SRIKANTH RANGINENI
Address of Applicant :#24-2-147, SANTHI NAGAR, NELLORE - 524 003 Andhra Pradesh India
(72)**Name of Inventor :**
1)SRIKANTH RANGINENI

(57) Abstract :
Disclosed is automatically controlled occupancy sensors system. In one implementation, a system and method for dynamically adjusting one or more properties of one or more sensor based on one or more event captured on one or more electrical or electronic device and a current state of said electrical or electronic device corresponding to a location of the one or more sensors, to thereby control the working of other systems is disclosed. The system comprises of the electrical or electronic device configured to capture one or more event on said electrical or electronic device, thereby detect current state of said device; and transmit one or more message to said sensor related to said event captured and said current state detected. The system also comprises of the sensor configured to control working of one or more other systems based on said properties adjusted in response to the message received. (To be published with figure 8)

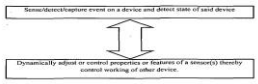

FIGURE 8

No. of Pages : 30 No. of Claims : 16

(12) PATENT APPLICATION PUBLICATION
(21) Application No.845/CHE/2014 A
(19) INDIA
(22) Date of filing of Application :20/02/2014
(43) Publication Date : 28/08/2015

(54) Title of the invention : PHARMACEUTICAL COMPOSITIONS COMPRISING CURCUMIN AND ITS DERIVATIVES FOR INTRA ORAL TOPICAL DELIVERY

(51) International classification	:A61K	(71)**Name of Applicant :**
(31) Priority Document No	:NA	**1)Rama Raju Devaraju**
(32) Priority Date	:NA	Address of Applicant :SRI SATYA SAI ORAL HEALTH CENTRE,
(33) Name of priority country	:NA	G-15 Ground floor, Rajnigandha Apts, Chaitanyapuri, Hyderabad.
(86) International Application No	:NA	Andhra Pradesh India
Filing Date	:NA	**2)Vijay kumar Dongari**
(87) International Publication No	: NA	(72)**Name of Inventor :**
(61) Patent of Addition to Application Number	:NA	**1)Rama Raju Devaraju**
Filing Date	:NA	**2)Vijay kumar Dongari**
(62) Divisional to Application Number	:NA	
Filing Date	:NA	

(57) Abstract :
The present invention relates to the medical field. In a first aspect the present invention relates to semisolid dosage forms having a pharmacological activity, in particular an anti-tumour and/or anti-inflammatory activity, and improved physico-chemical properties. In a second aspect, the present invention relates to a method for preparation of said semisolid curcumin derivatives. The invention further relates in a third aspect to a pharmaceutical composition comprising an effective amount of said semi solid curcumin derivatives. In a fourth aspect, the present invention concerns the use of said semisolid cucumin derivatives as a medicament and the use of said semisolid curcumin derivatives for the preparation of a medicament for the treatment of lesions like Lichen planus, desquamative gingivitis, oral sub mucous fibrosis, apthous stomatitis, traumatic ulcers and other muco cutaneous lesions. In a fifth aspect, the present invention relates to the use of a pharmaceutical composition comprising said semisolid curcumin derivatives in the treatment of cancer and inflammatory diseases and to a new pharmaceutical composition comprising said semisolid curcumin derivatives.

No. of Pages : 25 No. of Claims : 10

(12) PATENT APPLICATION PUBLICATION
(21) Application No.779/CHE/2014 A
(19) INDIA
(22) Date of filing of Application :18/02/2014
(43) Publication Date : 28/08/2015

(54) Title of the invention : MULTI DIAMETER MULTI PURPOSE SPLIT BODY APPARATUS

(51) International classification :B23P
(31) Priority Document No :NA
(32) Priority Date :NA
(33) Name of priority country :NA
(86) International Application No :NA
Filing Date :NA
(87) International Publication No : NA
(61) Patent of Addition to Application Number :NA
Filing Date :NA
(62) Divisional to Application Number :NA
Filing Date :NA

(71)**Name of Applicant :**
1)RAMESH BABU.R
Address of Applicant :no:13.Sathyanarayana Temple street,1st floor precision foto type services, Near Gupta layout,Halasuru ,Bangalore-560008.Karnataka,India. Karnataka India
(72)**Name of Inventor :**
1)RAMESH BABU.R

(57) Abstract :
This Invention relates to Multi diameter Multi purpose split body apparatus which comprises a main housing (2) that has a taper-form drive-end (1) that gets engaged with Main spindle of the corresponding machine tool to transfer rotary motion . The main-housing(2) comprises a miniature power-pack system(8) in to a cylindrical connector hole(27) leads to the grip-zone(5) where the shrink fitted shrink-ring(4) grips the component /cutting-tool . The pressure is applied through thermo-polymer(10) which operates at shore hardness below 10 Shore A. which grips the cutting-tool shank/component under hydrostatic pressure. On need base this apparatus can be used to grip cutters as well as components or parts to perform any machining and grinding operations. The drive-end(1) and main-housing (2) being made up of single metal piece construction as part 1 where as Grip-end (5) is made up of separate metal piece construction as part 2 and both are joined together by shrink fitting . For which there are 3 pin alignment arrangements. Three or more different diameters (d1 ,d2,d3 and may be up to dn)of grip zones (5)which can be shrunk fitted on need base any one at a time by shrink fitting with the common drive-end (1) of part 1 .

No. of Pages : 31 No. of Claims : 10

(12) PATENT APPLICATION PUBLICATION
(19) INDIA
(22) Date of filing of Application :20/02/2014

(21) Application No.843/CHE/2014 A
(43) Publication Date : 28/08/2015

(54) Title of the invention : AN APPARATUS AND METHOD FOR PROVIDING POWER MANAGEMENT IN MOBILE DEVICES

(51) International classification :H04N
(31) Priority Document No :NA
(32) Priority Date :NA
(33) Name of priority country :NA
(86) International Application No :NA
Filing Date :NA
(87) International Publication No : NA
(61) Patent of Addition to Application Number :NA
Filing Date :NA
(62) Divisional to Application Number :NA
Filing Date :NA

(71)**Name of Applicant :**
1)SAMSUNG R&D INSTITUTE INDIA BANGALORE PRIVATE LIMITED
Address of Applicant :# 2870, ORION Building, Bagmane Constellation Business Park, Outer Ring Road, Doddanakundi Circle, Marathahalli Post, Bangalore -560037, Karnataka, India Karnataka India
(72)**Name of Inventor :**
1)PRAJAPATI, Rishi
2)PATANKAR, Anish Anil
3)BOSE, Dr. Joy

(57) Abstract :
The various embodiments herein provide an apparatus and method for providing power management in mobile devices and activating one or more device specific functions of the mobile device during a low-power state of the mobile device. The apparatus herein comprises of a sensor unit, a device processor and a device power management module coupled to the sensor unit and the processor. The sensor unit comprises of a plurality of active sensors adapted for generating power in response to a user input during a low power mode of the mobile. The device power management module is configured for receiving a plurality of sensor instructions from the sensor unit and instructing the device processor to activate one or more device components on the mobile device using the generated power to perform a plurality of predefined device functionalities during a low power mode of the mobile device. Figure 2

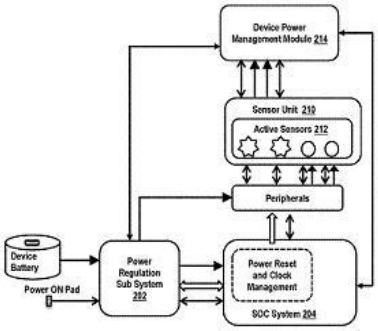

Figure. 2

No. of Pages : 21 No. of Claims : 8

(12) PATENT APPLICATION PUBLICATION
(21) Application No.5183/CHE/2013 A
(19) INDIA
(22) Date of filing of Application :14/11/2013
(43) Publication Date : 28/08/2015

(54) Title of the invention : SOLAR POWERED ELECTRIC BICYCLE

(51) International classification :H02J7/00
(31) Priority Document No :NA
(32) Priority Date :NA
(33) Name of priority country :NA
(86) International Application No :NA
Filing Date :NA
(87) International Publication No : NA
(61) Patent of Addition to Application Number :NA
Filing Date :NA
(62) Divisional to Application Number :NA
Filing Date :NA

(71)**Name of Applicant :**
1)SAVEETHA SCHOOL OF ENGINEERING SAVEETHA UNIVERSITY
Address of Applicant :THANDALAM, CHENNAI - 602 105 Tamil Nadu India
(72)**Name of Inventor :**
1)MR. A. MUNIAPPAN
2)DR. G. ARUNKUMAR
3)DR. C. THIAGARAJAN
4)DR. T.S. BALASUBRAMANIAN

(57) Abstract :
A Solar Bicycle This invention relates to a solar bicycle which has provision to run on sunlight selected from solar energy, electricity, additionally the bicycle can also be used to function as a power generator when the bicycle is at rest. A solar powered electrical bicycle includes a D.C motor, solar panel, control switch, battery, charger and brake control device adapted to the bicycle. Control switch to be mounted to a handlebar of the bicycle and a switching device integrated with this cycle. The motor is connected to the back wheel of cycle with help of chain sprocket to make the cycle run. A dynamo fitted in the cycle for lighting head lamp. Battery supplies power to horn & indicators for safe driving. Solar panel has been fitted with bicycle itself.

No. of Pages : 4 No. of Claims : 4

(12) PATENT APPLICATION PUBLICATION
(21) Application No.5448/CHE/2013 A
(19) INDIA
(22) Date of filing of Application :27/11/2013
(43) Publication Date : 28/08/2015

(54) Title of the invention : MULTI DIMENSIONAL INTEGRATED FAMILY THERAPY

(51) International classification :A61N
(31) Priority Document No :NA
(32) Priority Date :NA
(33) Name of priority country :NA
(86) International Application No :NA
Filing Date :NA
(87) International Publication No : NA
(61) Patent of Addition to Application Number :NA
Filing Date :NA
(62) Divisional to Application Number :NA
Filing Date :NA

(71)**Name of Applicant :**
1)Myneni Sarada Devi
Address of Applicant :Department of Human Development and family studies College of Home Science Saifabad, Hyderabad-500 004, Andhra Pradesh, India Andhra Pradesh India
(72)**Name of Inventor :**
1)Myneni Sarada Devi

(57) Abstract :
This therapy can be used for individuals as well as families as correctional therapy as a correctional inner game tool. This correctional inner game tool includes many inner game tools such as redefinition tool, perspective tool and acceptance tool. Different inner game tools are used in offering therapy as a correctional therapeutic tool, Redefinition tool.

No. of Pages : 11 No. of Claims : 2

(12) PATENT APPLICATION PUBLICATION
(19) INDIA
(22) Date of filing of Application :04/12/2013

(21) Application No.5590/CHE/2013 A
(43) Publication Date : 28/08/2015

(54) Title of the invention : System and method for controlling oscillatory instabilities in a device

(51) International classification :G06F
(31) Priority Document No :NA
(32) Priority Date :NA
(33) Name of priority country :NA
(86) International Application No :NA
Filing Date :NA
(87) International Publication No : NA
(61) Patent of Addition to Application Number :NA
Filing Date :NA
(62) Divisional to Application Number :NA
Filing Date :NA

(71)**Name of Applicant :**
1)Indian Institute of Technology Madras
Address of Applicant :Indian Institute of Technology Madras (IIT Madras), IIT PO, Chennai - 600036 Tamil Nadu India
(72)**Name of Inventor :**
1)Vishnu R. Unni
2)Vineeth Nair V.
3)R. I. Sujith
4)Achintya Mukhopadhyay

(57) Abstract :
A method for detecting onset of oscillatory instability in a device is described. The method includes obtaining a symbolic time series of a time series signal corresponding to a dynamic state variable of the device. The method further includes detecting the onset of oscillatory instability in the device based on the symbolic time series.

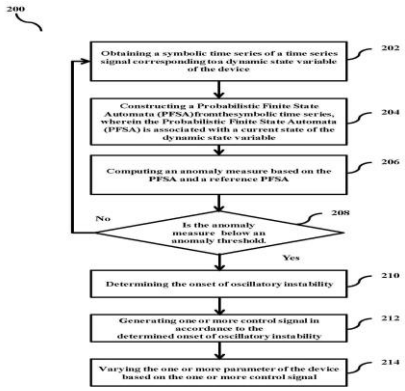

FIG 2

No. of Pages : 35 No. of Claims : 17

(12) PATENT APPLICATION PUBLICATION
(21) Application No.6135/CHE/2013 A
(19) INDIA
(22) Date of filing of Application :27/12/2013
(43) Publication Date : 28/08/2015

(54) Title of the invention : A PROCEDURE FOR FABRICATING AND USING DECELLULARIZED PORCINE CHOLECYST AS MUSCLE GRAFT FOR REPAIRING FULL OR PARTIAL THICKNESS ABDOMINAL DEFECT/HERNIA

(51) International classification :A61L27/00
(31) Priority Document No :NA
(32) Priority Date :NA
(33) Name of priority country :NA
(86) International Application No :NA
Filing Date :NA
(87) International Publication No : NA
(61) Patent of Addition to Application Number :NA
Filing Date :NA
(62) Divisional to Application Number :NA
Filing Date :NA

(71)**Name of Applicant :**
1)SREE CHITRA TIRUNAL INSTITUTE FOR MEDICAL SCIENCES AND TECHNOLOGY
Address of Applicant :Biomedical Technology Wing, Poojappura, Thiruvananthapuram 695 012, India Kerala India
(72)**Name of Inventor :**
1)Thapasimuthu Vijayamma Anilkumar
2)Dhanush Krishna. B
3)Syam Kunnekkattu Venugopal
4)N. Divakaran Nair

(57) Abstract :
This invention relates to a process for fabricating a graft for use in repairing abdominal defect/hernia, comprising the steps of collecting porcine cholecyst (gall bladder) from slaughter houses in a stabilizing agent, cutting open the cholecyst and freeing the same of its contents and flattening the same to obtain a flat sheet, subjecting the sheet to decellularization by scraping the numcosal layer and peeling off the serosal and muscularis layers to obtain a thin sheet of the decellularised cholecyst (d-PC), optionally augmenting the thickness of the scaffold.

No. of Pages : 12 No. of Claims : 5

(12) PATENT APPLICATION PUBLICATION
(21) Application No.744/CHE/2014 A
(19) INDIA
(22) Date of filing of Application :17/02/2014
(43) Publication Date : 28/08/2015

(54) Title of the invention : A HEAT DISSIPATING DEVICE

(51) International classification :B21D
(31) Priority Document No :NA
(32) Priority Date :NA
(33) Name of priority country :NA
(86) International Application No :NA
Filing Date :NA
(87) International Publication No : NA
(61) Patent of Addition to Application Number :NA
Filing Date :NA
(62) Divisional to Application Number :NA
Filing Date :NA

(71)**Name of Applicant :**
1)Robert Bosch Engineering and Business Solutions Limited
Address of Applicant :123, Industrial Layout, Hosur Road, Koramangala, Bangalore 560095, Karnataka, INDIA Karnataka India
2)Robert Bosch GmbH
(72)**Name of Inventor :**
1)THANGAMANI Gift Selvin Dharmaraj

(57) Abstract :
The various embodiment of the present disclosure provides a heat dissipating device 100 to be used in electrical machines. The heat dissipating device 100 comprises at least two metallic plates 106, at least one metallic tube 102 and at least one mounting means. Each of the metallic plates 106 comprises at least one engaging orifice 104. The engaging orifices 104 of the at least two metallic plates 106 are coaxially aligned. The at least one metallic tube 102 connects the at least two metallic plates 106 through at least one said coaxially aligned engaging orifices 104. The at least one metallic tube 102 also holds an electronic circuit component. The mounting means is provided on the at least two metallic plates 106. Reference figure: Figure 01

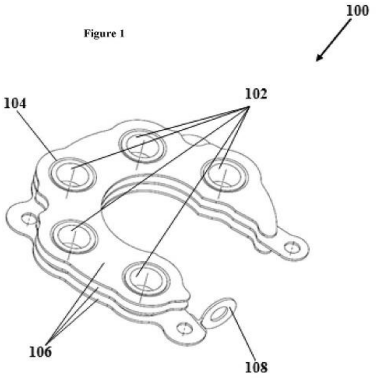

No. of Pages : 12 No. of Claims : 9

(12) PATENT APPLICATION PUBLICATION
(21) Application No.800/CHE/2014 A
(19) INDIA
(22) Date of filing of Application :19/02/2014
(43) Publication Date : 28/08/2015

(54) Title of the invention : A COMPOSITION FOR ENHANCED DERMAL EXTRACELLULAR MATRIX MAINTENANCE AND PROTECTION AND USES THEREOF

(51) International classification :C07D
(31) Priority Document No :NA
(32) Priority Date :NA
(33) Name of priority country :NA
(86) International Application No :NA
Filing Date :NA
(87) International Publication No : NA
(61) Patent of Addition to Application Number :NA
Filing Date :NA
(62) Divisional to Application Number :NA
Filing Date :NA

(71)**Name of Applicant :**
1)ITC LIMITED
Address of Applicant :ITC-LIFE SCIENCE AND TECHNOLOGY CENTER #3, 1st Main, Peenya Industrial Area, Phase 1, Bangalore 560 058 Karnataka India
(72)**Name of Inventor :**
1)KUMARI, Deva
2)JOIS, Prashanth
3)CHANDRASEKHARAN, Lakshmanan Chittur
4)BANDYOPADHYAY, Balaji

(57) Abstract :
The present disclosure relates to a composition comprising oleanolic acid, amino acid, dipeptide, peptide, and plant hormones for enhanced dermal barrier protection and maintenance. The present disclosure also provides a formulation comprising said composition for topical cosmetic application to delay skin aging.

No. of Pages : 22 No. of Claims : 13

(12) PATENT APPLICATION PUBLICATION
(21) Application No.4353/CHE/2013 A
(19) INDIA
(22) Date of filing of Application :25/09/2013
(43) Publication Date : 28/08/2015

(54) Title of the invention : TWO OR MORE PIECE BEAD LOCK SYSTEMS FOR TUBE AND TUBELESS TYRES

(51) International classification :B60C
(31) Priority Document No :NA
(32) Priority Date :NA
(33) Name of priority country :NA
(86) International Application No :NA
Filing Date :NA
(87) International Publication No : NA
(61) Patent of Addition to Application Number :NA
Filing Date :NA
(62) Divisional to Application Number :NA
Filing Date :NA

(71)**Name of Applicant :**
1)Vishweshwar Rao Japala
Address of Applicant :Flat No: 7-1-63/ 203A, Millennium Royal Apts Dharam Karam Road, Ameerpet Hyderabad. Andhra Pradesh India
(72)**Name of Inventor :**
1)Vishweshwar Rao Japala

(57) Abstract :
The current invention is related to a two or more pieces easy to fit safety device called bead lock when used in combination with tube, tubeless, custom design wheel rim and Tube type or tubeless type tyre, radial or bias provides increased traction and braking when operating under low tyre pressure conditions required for greater traction on rocks, sand, mud snow, loose dirt, or any off-road surface, it improved steering control and minimize the chances of rollover caused by the unseating of the tyre bead in 3 piece lock ring type of wheel rims.

No. of Pages : 13 No. of Claims : 6

(12) PATENT APPLICATION PUBLICATION
(21) Application No.3347/CHE/2013 A
(19) INDIA
(22) Date of filing of Application :26/08/2013
(43) Publication Date : 28/08/2015

(54) Title of the invention : INSTRUMENT CLUSTER MOUNTED WITH A SPEED SENSING SENSOR AND A METHOD THEREOF

(51) International classification	:G01D11/00	(71)**Name of Applicant :**
(31) Priority Document No	:NA	**1)PRICOL LIMITED**
(32) Priority Date	:NA	Address of Applicant :P.B. No. 6331, (1087-A), New No. 70217, Avanashi Road, Coimbatore - 641 037, Tamil Nadu Tamil Nadu India
(33) Name of priority country	:NA	(72)**Name of Inventor :**
(86) International Application No	:NA	**1)**
Filing Date	:NA	
(87) International Publication No	: NA	
(61) Patent of Addition to Application Number	:NA	
Filing Date	:NA	
(62) Divisional to Application Number	:NA	
Filing Date	:NA	

(57) Abstract :
An instrument cluster (100) of a vehicle, comprising: a housing (1), comprising a first opening (2) at top cover (2a) configured to accommodate readout components of the instrument cluster (100) and a second opening (3) at back cover (3a), configured to accommodate a feedback unit (4) and at least one sensor probe (5); characterized in that, the at least one sensor probe (5) is provided at the second opening (2) of the housing (1) such that the at least one sensor probe (5) is located at the second opening (3) at any one of inside the second opening (3), substantially inside the second opening (3) and outside the second opening (3).

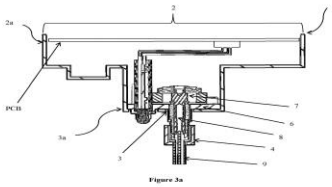

Figure 3a

No. of Pages : 17 No. of Claims : 13

(12) PATENT APPLICATION PUBLICATION
(21) Application No.4325/CHE/2013 A
(19) INDIA
(22) Date of filing of Application :24/09/2013
(43) Publication Date : 28/08/2015

(54) Title of the invention : METHOD FOR DETERMINING DISTORTION CONTRIBUTION OF INDIVIDUAL ELEMENTS IN AN ANALOG CIRCUIT

(51) International classification :G06T
(31) Priority Document No :NA
(32) Priority Date :NA
(33) Name of priority country :NA
(86) International Application No :NA
Filing Date :NA
(87) International Publication No : NA
(61) Patent of Addition to Application Number :NA
Filing Date :NA
(62) Divisional to Application Number :NA
Filing Date :NA

(71)**Name of Applicant :**
1)INDIAN INSTITUTE OF TECHNOLOGY MADRAS
Address of Applicant :IIT P.O CHENNAI - 600 036 Tamil Nadu India
(72)**Name of Inventor :**
1)NAGENDRA KRISHNAPURA
2)RAKSHITDATTA K S

(57) Abstract :
The invention relates to methods for determining distortion contributions of individual elements in an analog circuit. The distortion contribution of each element in the circuit is determined in turn. The circuit is simulated by replacing the selected element by another element, whose operating point and first order terms are the same as in the original circuit. Nonlinear terms of the original circuit are identified and the output distortion of the modified circuit is simulated by changing the scaling factors of nonlinear terms to obtain a set of linear equations. The output distortion of the selected element is determined by solving the linear equations to obtain the nonlinear terms.

No. of Pages : 22 No. of Claims : 5

(12) PATENT APPLICATION PUBLICATION
(21) Application No.4538/CHE/2013 A
(19) INDIA
(22) Date of filing of Application :07/10/2013
(43) Publication Date : 28/08/2015

(54) Title of the invention : ELECTRONIC PROTECTOR CUM SURGE GUARD

(51) International classification :H02H
(31) Priority Document No :NA
(32) Priority Date :NA
(33) Name of priority country :NA
(86) International Application No :NA
Filing Date :NA
(87) International Publication No : NA
(61) Patent of Addition to Application Number :NA
Filing Date :NA
(62) Divisional to Application Number :NA
Filing Date :NA

(71)**Name of Applicant :**
1)S.L NARASIMHAN
Address of Applicant :No 1370, 6th main, 5th stage, I Phase, Beml Layout, Rajarajeshwari Nagar, Bangalore-560098, Karnataka, India Karnataka India
(72)**Name of Inventor :**
1)S.L NARASIMHAN

(57) Abstract :
The present invention relates to an electronic protector cum surge guard. In one embodiment, the surge guard comprising: a set of circuit arrangement to set the over voltage and the under voltage level as per load requirement, a voltage sensing circuit to sense the voltage levels from power supply to the Load coupled, and a voltage comparator to compare the set voltage level and sensed voltage in proportional levels, wherein the voltage comparator triggers and switches off the relay to control/avoid over and under voltage limits of supply to the Load.

No. of Pages : 27 No. of Claims : 10

(12) PATENT APPLICATION PUBLICATION
(21) Application No.801/CHE/2014 A
(19) INDIA
(22) Date of filing of Application :19/02/2014
(43) Publication Date : 28/08/2015

(54) Title of the invention : A SYSTEM AND METHOD FOR REMOTE EXECUTION OF A CLOUD APPLICATION

(51) International classification :H04N
(31) Priority Document No :NA
(32) Priority Date :NA
(33) Name of priority country :NA
(86) International Application No :NA
Filing Date :NA
(87) International Publication No : NA
(61) Patent of Addition to Application Number :NA
Filing Date :NA
(62) Divisional to Application Number :NA
Filing Date :NA

(71)**Name of Applicant :**
1)P-Device Systems Pvt Ltd
Address of Applicant :401-402, Connection Point, Konene Agrahara, Bangalore 560071. Karnataka India
(72)**Name of Inventor :**
1)Singh Keval
2)Chakravarty Ventrapregada Srinivas

(57) Abstract :
[0043] The present invention relates to a system and method for executing the cloud application remotely on the user device such as a residential gateway with HDMI, STB, Smart TV, Home automation controller or a video phone (with HDMI) with remote execution (RE) agent for remotely viewing and controlling the user interface (UI) of the cloud application from a mobile device. The mobile device acts as a device that starts the execution of the cloud application remotely on the user device and also to remotely view and control the user interface (UI) of the cloud application.

No. of Pages : 17 No. of Claims : 19

(12) PATENT APPLICATION PUBLICATION
(19) INDIA
(22) Date of filing of Application :10/02/2010
(21) Application No.126/KOL/2010 A
(43) Publication Date : 28/08/2015

(54) Title of the invention : METHOD FOR TESTING A CONTROL APPARATUS AND TEST DEVICE

(51) International classification :F25B41/04
(31) Priority Document No :09.002.479.5
(32) Priority Date :20/02/2009
(33) Name of priority country :EUROPEAN UNION
(86) International Application No :NA
Filing Date :NA
(87) International Publication No : NA
(61) Patent of Addition to Application Number :NA
Filing Date :NA
(62) Divisional to Application Number :NA
Filing Date :NA

(71)**Name of Applicant :**
1)DSPACE DIGITAL SIGNAL PROCESSING AND CONTROL ENGINEERING GMBH
Address of Applicant :TECHNOLOGIEPARK 25, 33100 PADERBORN GERMANY
(72)**Name of Inventor :**
1)LAMBERG, KLAUS
2)THIESSEN, CHRISTINE
3)SCHNELTE, MATTHIAS

(57) Abstract :
A method is described and represented for testing a control apparatus with a test device, where the control apparatus has at least one state variable and at least one actual functionality that contains a time dependency, and the control apparatus and the test device are connected to each other via a signal interface. The problem of the present invention is to prevent - at least partially- the disadvantages known from the state of the art, and, particularly, to provide a method for testing a control apparatus, which allows as simple and flexible an acquisition of the target functionality of a control apparatus is possible, and which takes into account the time dependency of the target functionality as comprehensively as possible during the test case generation.

No. of Pages : 20 No. of Claims : 13

(12) PATENT APPLICATION PUBLICATION
(19) INDIA
(22) Date of filing of Application :18/01/2010
(21) Application No.199/KOLNP/2010 A
(43) Publication Date : 28/08/2015

(54) Title of the invention : LIGHT EMITTING DEVICES WITH PHOSPHOSILICATE GLASS

(51) International classification	:H01S 3/17,H01S 3/067
(31) Priority Document No	:60/929,864
(32) Priority Date	:16/07/2007
(33) Name of priority country	:U.S.A.
(86) International Application No	:PCT/CA2008/001296
Filing Date	:15/07/2008
(87) International Publication No	:WO 2009/009888
(61) Patent of Addition to Application Number	:NA
Filing Date	:NA
(62) Divisional to Application Number	:NA
Filing Date	:NA

(71)**Name of Applicant :**
1)CORACTIVE HIGH-TECH INC.
Address of Applicant :2700 JEAN-PERRIN, S. 121, QUEBEC, QUEBEC G2C 1S9 CANADA
(72)**Name of Inventor :**
1)MORASSE, BERTRAND
2)DE SANDRO, JEAN-PHILIPPE
3)GAGNON, ERIC
4)CHATIGNY, ST‰PHANE

(57) Abstract :
A light-emitting device is provided which includes a gain medium having an optically-active phosphosilicate glass, wherein the phosphosilicate glass includes at least one active ion dopant and from about 1 to 30 mol% of phosphorus oxide. The phosphorous oxide may be present in an effective amount for reducing any photodarkening effect and increasing the saturation energy of the system. The active ion dopant may be a rare earth dopant. The light-emitting device may include an optical waveguide, the optical waveguide including the gain medium. The optical waveguide may have a core and at least one cladding, and the gain medium having the phosphosilicate glass may be found in the core and/or in one of the cladding.

No. of Pages : 21 No. of Claims : 32

(12) PATENT APPLICATION PUBLICATION
(19) INDIA
(22) Date of filing of Application :17/11/2009
(21) Application No.3978/KOLNP/2009 A
(43) Publication Date : 28/08/2015

(54) Title of the invention : DAMPER AND DAMPING STRUCTURE FOR A WAVE ENERGY CONVERSION DEVICE

(51) International classification	:F03B 13/18,F16F 1/36
(31) Priority Document No	:07106450.5
(32) Priority Date	:18/04/2007
(33) Name of priority country	:EUROPEAN UNION
(86) International Application No	:PCT/EP2008/054740
Filing Date	:18/04/2008
(87) International Publication No	:WO 2008/128999
(61) Patent of Addition to Application Number	:NA
Filing Date	:NA
(62) Divisional to Application Number	:NA
Filing Date	:NA

(71)**Name of Applicant :**
1)TECHNOLOGY FROM IDEAS LIMITED
Address of Applicant :UNIT 3B, CLEABOY BUSINESS PARK, OLD KILMEADEN ROADWATERFORD IRELAND
(72)**Name of Inventor :**
1)HEALY, ROBERT
2)MCEVOY, PAUL

(57) Abstract :
The present invention relates to a damper for damping the reactionary motion of a wave energy conversion device (1) to wave motion, comprising a damping energy absorber (7) having a reversible non-linear stress-strain response, arranged to damp the reactionary motion of the WEC. According to a first aspect, there is provided a damping structure (2) for a wave energy conversion device (1). The structure comprises a fixed member (S), and a damping member (7) having a reversible non-linear stress-strain response. The damping member (7) is connectable between the fixed member (6) and a moveable member or float (3) of a wave energy conversion device (1). The invention also relates to a wave energy conversion device (1).

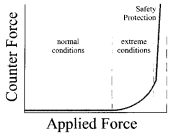

No. of Pages : 39 No. of Claims : 25

(12) PATENT APPLICATION PUBLICATION
(19) INDIA
(22) Date of filing of Application :31/12/2009
(21) Application No.4568/KOLNP/2009 A
(43) Publication Date : 28/08/2015

(54) Title of the invention : TREATMENT OF VIRAL INFECTIONS BY MODULATION OF HOST CELL METABOLIC PATHWAYS

(51) International classification :A61K 31/365
(31) Priority Document No :60/932,769
(32) Priority Date :01/06/2007
(33) Name of priority country :U.S.A.
(86) International Application No :PCT/US2008/006959
Filing Date :02/06/2008
(87) International Publication No :WO 2009/023059
(61) Patent of Addition to Application Number :NA
Filing Date :NA
(62) Divisional to Application Number :NA
Filing Date :NA

(71)**Name of Applicant :**
1)THE TRUSTEES OF PRINCETON UNIVERSITY
Address of Applicant :P.O. BOX 36, 4 NEW SOUTH BUILDING, PRINCETON, NJ 08544, UNITED STATES OF AMERICA
(72)**Name of Inventor :**
1)SHENK, THOMAS
2)RABINOWITZ, JOSHUA, D.
3)MUNGER, JOSH
4)BENNETT, BRYSON

(57) Abstract :
Alterations of certain metabolite concentrations and fluxes that occur in response to viral infection are described. Host cell enzymes in the involved metabolic pathways are selected as targets for intervention; i.e., to restore metabolic flux to disadvantage viral replication, or to further derange metabolic flux resulting in suicide of viral-infected cells (but not uninfected cells) in order to limit viral propagation. While any of the enzymes in the relevant metabolic pathway can be selected, pivotal enzymes at key control points in these metabolic pathways are preferred as candidate antiviral drug targets. Inhibitors of these enzymes are used to reverse, or redirect, the effects of the viral infection. Drug candidates are tested for antiviral activity using screening assays in vitro and host cells, as well as in animal models. Animal models are then used to test efficacy of candidate compounds in preventing and treating viral infections. The antiviral activity of enzyme inhibitors is demonstrated

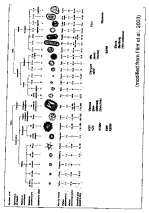

No. of Pages : 340 No. of Claims : 36

(12) PATENT APPLICATION PUBLICATION
(21) Application No.418/KOL/2010 A
(19) INDIA
(22) Date of filing of Application :13/04/2010
(43) Publication Date : 28/08/2015

(54) Title of the invention : CLEANING APPARATUS FOR MAINTAINING HIGH EFFICIENCY INTELLIGENT SEPARATE MEMBRANES AND METHOD THEREOF.

(51) International classification	:A46B13/02
(31) Priority Document No	:10-2009-0035478
(32) Priority Date	:23/04/2009
(33) Name of priority country	:Republic of Korea
(86) International Application No	:NA
Filing Date	:NA
(87) International Publication No	: NA
(61) Patent of Addition to Application Number	:NA
Filing Date	:NA
(62) Divisional to Application Number	:NA
Filing Date	:NA

(71)**Name of Applicant :**
1)DAEWOO E&C CO., LTD.
Address of Applicant :57 SINMUMNO 1GA, JONGNO-GU, SEOUL REPUBLIC OF KOREA
2)KUMHO ENVIROTECH CO., LTD.
(72)**Name of Inventor :**
1)LEE, EUI-SIN
2)LEE, BUM-GOO
3)OH, HEE-KYONG
4)EOM, JUNG-YEOL
5)LEE, KWON-KI
6)KANG, SEONG-HUN

(57) Abstract :
Provided are a cleaning apparatus and method for maintaining high efficiency intelligent separation membranes. The cleaning apparatus includes a raw water solenoid valve, a filtered-water solenoid valve, a backwash water solenoid valve, a drain solenoid valve, a first chemical tank, a second chemical tank, an online measurer, and a controller. The raw water solenoid valve is disposed at a raw water pipe to provide raw water to the separation membrane. The filtered-water solenoid valve is disposed at a filtered-water pipe to drain filtered water which is drained from the separation membrane. A one end of the backwash water solenoid valve is connected to the raw water pipe to provide backwash water of a backwash water vessel to the separation membrane through a backwash pump, and another end is disposed at a backwash water pipe which is connected to the backwash water vessel. The drain solenoid valve is disposed at a drain pipe which is connected to the raw water pipe to drain backwash water and chemicals which are drained from the separation membrane. The first chemical tank is disposed at the filtered-water pipe in parallel, and provides a first chemical to the separation membrane. The second chemical tank is disposed at the filtered-water pipe in parallel, and provides a second chemical to the separation membrane. The online measurer is disposed at the raw water pipe to measure a quality of raw water. The controller checks a total population of algae of raw water which is measured by the online measurer according to a predetermined time. The controller provides chemicals of the first chemical tank to the separation membrane when the total population of algae is less than a reference value. The controller provides chemicals of the second chemical tank to the separation membrane when the total population of algae is equal to or greater than the reference value. The controller chemical cleans the separation membrane for a certain time. The cleaning apparatus measures the quality of raw water to detect the total population of algae and change chemicals according to the total population of algae to clean the separation membrane, thereby enabling the efficient operation of the separation membrane. The cleaning apparatus extends the life of the separation membrane and thus can save cost expended in the replacement of the separation membrane. The cleaning apparatus prevents a load from being given to the pump due to decrease of the transmittance of the membrane and thus can save the driving cost of the pump that is expended in running.

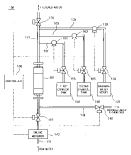

No. of Pages : 36 No. of Claims : 15

(12) PATENT APPLICATION PUBLICATION
(21) Application No.7/KOL/2010 A
(19) INDIA
(22) Date of filing of Application :04/01/2010
(43) Publication Date : 28/08/2015

(54) Title of the invention : NO-LOAD BEARING FOR A CONE CRUSHER

(51) International classification :B02C2/04
(31) Priority Document No :12/362,669
(32) Priority Date :30/01/2009
(33) Name of priority country :U.S.A.
(86) International Application No :NA
Filing Date :NA
(87) International Publication No : NA
(61) Patent of Addition to Application Number :NA
Filing Date :NA
(62) Divisional to Application Number :NA
Filing Date :NA

(71)**Name of Applicant :**
1)METSO MINERALS INDUSTRIES, INC.
Address of Applicant :20965 CROSSROADS CIRCLE, WAUKESHA, WISCONSIN 53186, UNITED STATES OF AMERICA
(72)**Name of Inventor :**
1)KAJA, DEAN, M.

(57) Abstract :
A cone crusher includes a stationary main shaft and an eccentric that rotates about the main shaft to cause gyrational movement of a head assembly to crush rock within a crushing gap. The cone crusher includes a lower head bushing in contact with an outer surface of the eccentric. The eccentric is formed with a contact pad to enhance the contact between the eccentric and the lower head bushing during a no-load condition. The contact pad includes a contact surface that is recessed from the outer surface of the eccentric to enhance contact during no- load conditions while maintaining full contact between the lower head bushing and the eccentric outer surface during full load, crushing conditions.

No. of Pages : 26 No. of Claims : 24

(12) PATENT APPLICATION PUBLICATION
(21) Application No.224/KOL/2014 A
(19) INDIA
(22) Date of filing of Application :21/02/2014
(43) Publication Date : 28/08/2015

(54) Title of the invention : AN IMPROVED BORING ARRANGEMENT WITH A BORING BAR HAVING A SUPPORTING FLANGE AND COLLARS FOR REVERSE BORING OPERATION IN ROTORS AND CASING OF STEAM TURBINE.

(51) International classification	:B23B 29/00
(31) Priority Document No	:NA
(32) Priority Date	:NA
(33) Name of priority country	:NA
(86) International Application No	:NA
Filing Date	:NA
(87) International Publication No	: NA
(61) Patent of Addition to Application Number	:NA
Filing Date	:NA
(62) Divisional to Application Number	:NA
Filing Date	:NA

(71)**Name of Applicant :**
1)BHARAT HEAVY ELECTRICALS LIMITED
Address of Applicant :REGIONAL OPERATIONS DIVISION(ROD), PLOT NO:9/1, DJBLOCK 3RD FLOOR, KARUNAMOYEE, SALTLAKE CITY, KOLKATA-700091, HAVING ITS REGISTERED OFFICE AT BHEL HOUSE, SIRI FORT, NEW DELHI - 110049, INDIA. West Bengal
(72)**Name of Inventor :**
1)KAMAL KISHORE BAHUKHANDI
2)PRAMOD KUMAR
3)JITENDRA KUMAR SHARMA

(57) Abstract :
The present invention relates to an improved boring arrangement with a boring bar (1) having a supporting flange (4) and collars (6). The boring bar is inserted into the supporting flange and to the spindle of the machine. The spindle is clamped to the machine head of the machine hydraulically. The supporting flange is fixed to the spindle by bolts (5) and is disposed for supporting and guiding the boring bar. The boring bar (1) is provided with two collars (6), one for acting as a mechanical stop for the flange and the other as a mechanical stop for the boring bar for going further in the spindle. A cutting tool is disposed on the boring bar for machining reverse boring operation.

No. of Pages : 19 No. of Claims : 4

(12) PATENT APPLICATION PUBLICATION
(21) Application No.523/KOL/2010 A
(19) INDIA
(22) Date of filing of Application :11/05/2010
(43) Publication Date : 28/08/2015

(54) Title of the invention : METHOD FOR ACQUIRING AND PROCESSING MARINE SEISMIC DATA TO EXTRACT AND CONSTRUCTIVELY USE THE UP-GOING AND DOWN-GOING WAVE-FIELDS EMITTED BY THE SOURCE(S)

(51) International classification :G01V1/00
(31) Priority Document No :12/455,470
(32) Priority Date :02/06/2009
(33) Name of priority country :U.S.A.
(86) International Application No :NA
Filing Date :NA
(87) International Publication No : NA
(61) Patent of Addition to Application Number :NA
Filing Date :NA
(62) Divisional to Application Number :NA
Filing Date :NA

(71)**Name of Applicant :**
1)PGS GEOPHYSICAL AS
Address of Applicant :STRANDVEIEN 4, N-1366 LYSAKER, NORWAY
(72)**Name of Inventor :**
1)HEGNA, STIAN
2)PARKES, GREGORY, ERNEST

(57) Abstract :
A method for acquisition and processing of marine seismic signals to extract up-going and down- going wave-fields from a seismic energy source includes deploying at least two marine seismic energy sources at different depths in a body of water. These seismic energy sources are actuated with known time delays that are varied from shot record to shot record. Seismic signals from sources deployed at different depths are recorded simultaneously. Seismic energy corresponding to each of the sources is extracted from the recorded seismic signals. Up-going and down-going wave-fields are extracted from the sources deployed at different depths using the extracted seismic energy therefrom. A method includes the separated up-going and down-going wave- fields are propagated to a water surface or a common reference, the up-going or the down-going wave-field is 180 degree phase shifted, and the signals from these modified up-going and down-going wave-fields are summed.

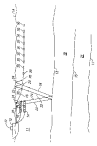

No. of Pages : 20 No. of Claims : 20

(12) PATENT APPLICATION PUBLICATION
(19) INDIA
(22) Date of filing of Application :09/10/2009
(21) Application No.3521/KOLNP/2009 A
(43) Publication Date : 28/08/2015

(54) Title of the invention : REINFORCED EAR TAG

(51) International classification :A01K 11/00
(31) Priority Document No :0702687
(32) Priority Date :13/04/2007
(33) Name of priority country :France
(86) International Application No :PCT/FR2008/000498
Filing Date :10/04/2008
(87) International Publication No :WO 2008/142277
(61) Patent of Addition to Application Number :NA
Filing Date :NA
(62) Divisional to Application Number :NA
Filing Date :NA

(71)**Name of Applicant :**
1)ALLFLEX EUROPE SAS
Address of Applicant :ROUTE DES EAUX, ZI DE PLAGUÉ, PB 70, F-35502 VITRÉ CEDEX FRANCE
(72)**Name of Inventor :**
1)HILPERT, JEAN-JACQUES

(57) Abstract :
The invention relates to a cattle marking and identification ear tag of the type that combines a male part and a female part, including a tag (2) and an essentially cylindrical or frusto-conical button (3) which is secured to an eyelet (4) in the tag, such that the base (5) of the button abuts against the edge of the eyelet, the contact surfaces having a complementary shape. The ear tag is characterised in that the base of the button includes at least one reinforcing rib (6). The button is provided with reinforcing elements such that the tag cannot be detached from the button at the eyelet using a cutting instrument without leaving visible traces of attempted forgery of the tag.

No. of Pages : 14 No. of Claims : 11

(12) PATENT APPLICATION PUBLICATION
(21) Application No.3522/KOLNP/2009 A
(19) INDIA
(22) Date of filing of Application :09/10/2009
(43) Publication Date : 28/08/2015

(54) Title of the invention : MULTI-CORE FIBER FOR OPTICAL PUMPING DEVICE AND MANUFACTURING METHOD THEREOF, OPTICAL PUMPING DEVICE, FIBER LASER AND FIBER AMPLIFIER

(51) International classification	:H01S 3/06,G02B 6/04
(31) Priority Document No	:2007-120271
(32) Priority Date	:27/04/2007
(33) Name of priority country	:Japan
(86) International Application No	:PCT/JP2008/057915
Filing Date	:24/04/2008
(87) International Publication No	:WO 2008/136344
(61) Patent of Addition to Application Number	:NA
Filing Date	:NA
(62) Divisional to Application Number	:NA
Filing Date	:NA

(71)**Name of Applicant :**
1)FUJIKURA LTD.
Address of Applicant :5-1, KIBA 1-CHOME, KOHTOH-KU, TOKYO 1358512 JAPAN
(72)**Name of Inventor :**
1)TANIGAWA, SHOJI
2)NAKAI, MICHIHIRO

(57) Abstract :
A multi-core fiber for an optical pumping device obtained by inserting a plurality of optical fibers into an alignment member and integrating by heating, in which the alignment member is constituted with a material that has a lower softening temperature than the softening temperature of the optical fibers that are inserted into holes provided in the alignment member. According to the present invention, it is possible to provide a low-cost and high-performance multi-core fiber for an optical pumping device with little deformation of the optical fibers when fusion integrating the alignment member and the optical fibers.

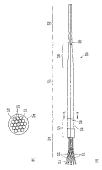

No. of Pages : 25 No. of Claims : 12

(12) PATENT APPLICATION PUBLICATION
(21) Application No.3523/KOLNP/2009 A
(19) INDIA
(22) Date of filing of Application :09/10/2009
(43) Publication Date : 28/08/2015

(54) Title of the invention : CONTROL METHOD FOR A CRUSHER AND A CRUSHER

(51) International classification :B02C 25/00
(31) Priority Document No :NA
(32) Priority Date :NA
(33) Name of priority country :NA
(86) International Application No :PCT/FI2007/050193
Filing Date :05/04/2007
(87) International Publication No :WO 2008/122689
(61) Patent of Addition to Application Number :NA
Filing Date :NA
(62) Divisional to Application Number :NA
Filing Date :NA

(71)**Name of Applicant :**
1)METSO MINERALS INC.
Address of Applicant :FABIANINKATU 9A, FIN-00101 HELSINKI FINLAND
(72)**Name of Inventor :**
1)LEHTONEN, TOMMI
2)POTILA, TAPIO

(57) Abstract :
A method for controlling the crusher, which crusher comprises at least a frame (6), a crushing means (4) with a cycle, as well as an actuator (10) for moving the crushing means. In the method, at least first data is determined, which is at least one of the following: the power input in the actuator, the crushing force, the particle distribution of the crushed material produced by the crusher, or the quantity of crushed material produced by the crusher. The cycle frequency of the crushing means (4) is controlled on the basis of the first data. The invention also relates to a crusher, in which the cycle frequency of the crushing means (4) is adjusted according to control data from the control unit (14).

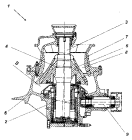

No. of Pages : 24 No. of Claims : 9

(12) PATENT APPLICATION PUBLICATION
(19) INDIA
(22) Date of filing of Application :13/04/2010
(21) Application No.419/KOL/2010 A
(43) Publication Date : 28/08/2015

(54) Title of the invention : ROOF BOLTING CABLE BOLT FEEDING DEVICE

(51) International classification :E21D23/08
(31) Priority Document No :2009201533
(32) Priority Date :20/04/2009
(33) Name of priority country :Australia
(86) International Application No :NA
Filing Date :NA
(87) International Publication No : NA
(61) Patent of Addition to Application Number :NA
Filing Date :NA
(62) Divisional to Application Number :NA
Filing Date :NA

(71)**Name of Applicant :**
1)JOY MM DELAWARE, INC.
Address of Applicant :2751 CENTERVILLE ROAD, WILMINGTON, DELAWARE 19808 UNITED STATES OF AMERICA
(72)**Name of Inventor :**
1)EDDOWES, WILL
2)WRIGHT, BRANT
3)GEORGIOU, MICHAEL

(57) Abstract :
A cable bolt lifting and feeding device that is a lightweight unit that mounts into a drill rig rotation unit. The device uses the mechanical power provided in the rotation unit to drive a set of wheels that engage with the cable bolt, causing the cable bolt to be pushed through the device and into a pre-drilled hole.

No. of Pages : 21 No. of Claims : 11

(12) PATENT APPLICATION PUBLICATION
(19) INDIA
(22) Date of filing of Application :01/01/2010
(21) Application No.4/KOL/2010 A
(43) Publication Date : 28/08/2015

(54) Title of the invention : METHOD AND SYSTEM FOR CONDUCTING CONTINUOUS PRESENCE CONFERENCES

(51) International classification :H04N7/15
(31) Priority Document No :61/148,772
(32) Priority Date :30/01/2009
(33) Name of priority country :U.S.A.
(86) International Application No :NA
Filing Date :NA
(87) International Publication No : NA
(61) Patent of Addition to Application Number :NA
Filing Date :NA
(62) Divisional to Application Number :NA
Filing Date :NA

(71)**Name of Applicant :**
1)POLYCOM, INC.
Address of Applicant :4750 WILLOW ROAD, PLEASANTON, CALIFORNIA 94588, UNITED STATES OF AMERICA
(72)**Name of Inventor :**
1)HALAVY, AVISHAY

(57) Abstract :
Disclosed are methods and systems for multipoint videoconferencing. A Media Relay MCU (MRM) receives compressed media (audio, video, and/or data) from a plurality of endpoints participating in a video conferencing session. For a given endpoint, the MRM selects which of other endpoints to display in a CP layout at the given endpoint. The MRM transmits the compressed media from the selected endpoints to the given endpoint to be presented in the CP layout. The MRM does not decode the compressed media.

No. of Pages : 43 No. of Claims : 44

(12) PATENT APPLICATION PUBLICATION
(19) INDIA
(22) Date of filing of Application :10/12/2009
(21) Application No.4279/KOLNP/2009 A
(43) Publication Date : 28/08/2015

(54) Title of the invention : DERIVATIVES OF 7-ALKYNYL-1,8-NAPHTHYRIDONES, PREPARATION METHOD THEREOF AND USE OF SAME IN THERAPEUTICS

(51) International classification :C07D 401/02
(31) Priority Document No :0704193
(32) Priority Date :13/06/2007
(33) Name of priority country :France
(86) International Application No :PCT/FR2008/000794
Filing Date :11/06/2008
(87) International Publication No :WO 2009/007536
(61) Patent of Addition to Application Number :NA
Filing Date :NA
(62) Divisional to Application Number :NA
Filing Date :NA

(71)**Name of Applicant :**
1)SANOFI-AVENTIS
Address of Applicant :174, AVENUE DE FRANCE, F-75013 PARIS FRANCE
(72)**Name of Inventor :**
1)ALAM, ANTOINE
2)BONO, FRANCOISE
3)DUCLOS, OLIVIER
4)MC CORT, GARY

(57) Abstract :
The invention relates to compounds having formula (I), in which: R1 and R2 represent, independently of each other, a hydrogen atom, an alkyl group at C1-C7, optionally substituted by one or more alkoxy groups; R3 represents an alkyl group at C1-C7; R4 represents a hydrogen atom, an alkyl group at C1-C4; Y represents an alkoxy group at C1-C4, a group -NRR, -O(CH2)n-C(O)- NRR, wherein R and R are as defined below and n is an integer equal to 1 or 2; R represents an alkyl group at C1-C4; and R and R represent, independently of each other, a hydrogen atom, a -CO-alkyl group at C1-C4 or a -COO group, wherein R is as defined above. The invention also relates to the preparation method thereof and to the use of same in therapeutics.

No. of Pages : 23 No. of Claims : 16

(12) PATENT APPLICATION PUBLICATION
(21) Application No.223/KOL/2014 A
(19) INDIA
(22) Date of filing of Application :21/02/2014
(43) Publication Date : 28/08/2015

(54) Title of the invention : A NANO-STRUCTURAL BARIUM ALUMINATE MODIFIED EPOXY RESIN COMPOSITES TO ACT AS A SUPERIOR ELECTRICAL INSULATION MATERIAL FOR HIGH VOLTAGE APPLICATIONS

(51) International classification	:H01B 3/00
(31) Priority Document No	:NA
(32) Priority Date	:NA
(33) Name of priority country	:NA
(86) International Application No	:NA
Filing Date	:NA
(87) International Publication No	: NA
(61) Patent of Addition to Application Number	:NA
Filing Date	:NA
(62) Divisional to Application Number	:NA
Filing Date	:NA

(71)**Name of Applicant :**
1)BHARAT HEAVY ELECTRICALS LIMITED
Address of Applicant :REGIONAL OPERATIONS DIVISION(ROD), PLOT NO:9/1, DJBLOCK 3RD FLOOR, KARUNAMOYEE, SALT LAKE CITY, KOLKATA-700091, HAVING ITS REGISTERED OFFICE AT BHEL HOUSE, SIRI FORT, NEW DELHI - 110049, INDIA. West Bengal
(72)**Name of Inventor :**
1)SUKUMAR ROY
2)SADANAND ACHARI
3)HARI RATHOD
4)GODAVARMA MURALIDHARAN
5)SPOORTHY NANJUNDASWAMY PATEL

(57) Abstract :
The invention describes the enhancement of AC breakdown voltage (BDV) of epoxy resin cast body using nanostructured barium aluminate as a dielectric filler material, for high voltage electrical applications with superior insulation properties. Nanostructured barium aluminate having amorphous structure in the x-ray diffraction (XRD) with a tap density in the range of 0.2 - 0.3 g/cc, is functionalized with silane by using liquid hardener as a media in the epoxy resin system, which is then treated with a conventional epoxy resin, accelerator, flexibilizer in a pre-defined ratio followed by heat treatment and curing in order to derive the barium aluminate filler-modified epoxy composite body. Thus modified epoxy composite body shows enhancement of AC breakdown voltage in the range of 5 - 25% merely by loading the barium aluminate filler in the range of 1 - 3 wt% in the conventional epoxy resin matrix. The modified resin composite body is used for fabricating various components in the area of high voltage electrical insulation applications.

No. of Pages : 22 No. of Claims : 9

(12) PATENT APPLICATION PUBLICATION
(19) INDIA
(22) Date of filing of Application :16/11/2009
(21) Application No.3958/KOLNP/2009 A
(43) Publication Date : 28/08/2015

(54) Title of the invention : ARRAY STIMULATOR

(51) International classification	:A61N 1/05,A61N 1/34
(31) Priority Document No	:0709834.6
(32) Priority Date	:22/05/2007
(33) Name of priority country	:U.K.
(86) International Application No	:PCT/GB2008/001723
Filing Date	:20/05/2008
(87) International Publication No	:WO 2008/142402
(61) Patent of Addition to Application Number	:NA
Filing Date	:NA
(62) Divisional to Application Number	:NA
Filing Date	:NA

(71)**Name of Applicant :**
1)GILLBE, IVOR STEPHEN
Address of Applicant :GREENSLEEVES, BRIDGE ROAD, LEIGH WOODS, BRISTOL BS8 3PE, UNITED KINGDOM
(72)**Name of Inventor :**
1)GILLBE, IVOR STEPHEN

(57) Abstract :
An array stimulator has a plurality of electrodes in an array (22), the electrodes forming a plurality of electrode pairs, and a signal generator (18) for generating signals to the electrodes so as to generate electrical pulse in a patient to which the stimulator has been applied either transcutaneously or by implantation. Those electrical pulses form a composite pulse in the patient which stimulates the nervous system of the patient. The composite pulse has a duration between 4µs and 1500µs and a maximum voltage between 2V and 50V when the stimulator is implanted, and 15V to 500V when applied transcutaneously. The electrical pulses themselves are significantly shorter duration than the composite pulse, so they stimulate the nervous system of the patient much less than the composite pulse or not at all.

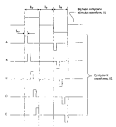

No. of Pages : 106 No. of Claims : 24

(12) PATENT APPLICATION PUBLICATION
(19) INDIA
(22) Date of filing of Application :16/11/2009
(21) Application No.3959/KOLNP/2009 A
(43) Publication Date : 28/08/2015

(54) Title of the invention : BENZIMIDAZOLES AND PHARMACEUTICAL COMPOSITIONS THEREOF

(51) International classification :A01N 43/50
(31) Priority Document No :60/912,980
(32) Priority Date :20/04/2007
(33) Name of priority country :U.S.A.
(86) International Application No :PCT/US2008/005084
Filing Date :21/04/2008
(87) International Publication No :WO 2008/130669
(61) Patent of Addition to Application Number :NA
Filing Date :NA
(62) Divisional to Application Number :NA
Filing Date :NA

(71)**Name of Applicant :**
1)THE RESEARCH FOUNDATION OF STATE UNIVERITY OF NEW YORK
Address of Applicant :POST OFFICE BOX 9, ALBANY, NJ 12201-0009 UNITED STATES OF AMERICA.
(72)**Name of Inventor :**
1)OJIMA, IWAO
2)LEE, SEUNG-YUB

(57) Abstract :
The present invention relates to novel benzimidazole derivatives and pharmaceutically acceptable salts thereof. An- other aspect of the invention relates to methods of treating a patient infected by Mycobacterium tuberculosis or Francisella tulerensis by administering to the patient a benzimidazole derivative or a pharmaceutically acceptable salt thereof.

No. of Pages : 61 No. of Claims : 22

(12) PATENT APPLICATION PUBLICATION
(19) INDIA
(22) Date of filing of Application :16/04/2010
(21) Application No.424/KOL/2010 A
(43) Publication Date : 28/08/2015

(54) Title of the invention : METHOD FOR CALCULATION OF SEISMIC ATTRIBUTES FROM SEISMIC SIGNALS

(51) International classification :E21B47/14
(31) Priority Document No :12/387,769
(32) Priority Date :07/05/2009
(33) Name of priority country :U.S.A.
(86) International Application No :NA
Filing Date :NA
(87) International Publication No : NA
(61) Patent of Addition to Application Number :NA
Filing Date :NA
(62) Divisional to Application Number :NA
Filing Date :NA

(71)**Name of Applicant :**
1)PGS GEOPHYSICAL AS
Address of Applicant :STRANDVEIEN 4, N-1366 LYSAKER NORWAY
(72)**Name of Inventor :**
1)DAY, ANTHONY JAMES
2)*KLÜVER*, TILMAN

(57) Abstract :
Filters are applied to seismic signals representative of subsurface formations to generate filtered signals with attenuated spatially aliased energy. The filtered signals are multiplied in the frequency-wavenumber domain by a complex function of frequency and wavenumber representing the seismic attribute in the frequency-wavenumber domain, to generate scaled signals. The scaled signals, transformed to the time-space domain, are divided by the filtered signals in the time-space domain, to a seismic attribute useful for identifying and characterizing the subsurface formations.

No. of Pages : 31 No. of Claims : 33

(12) PATENT APPLICATION PUBLICATION
(19) INDIA
(22) Date of filing of Application :30/03/2010
(21) Application No.358/KOL/2010 A
(43) Publication Date : 28/08/2015

(54) Title of the invention : SYSTEM AND METHOD FOR PROTECTION OF SCR CATALYST

(51) International classification :B01J15/00
(31) Priority Document No :61/171,619
(32) Priority Date :22/04/2009
(33) Name of priority country :U.S.A.
(86) International Application No :NA
Filing Date :NA
(87) International Publication No : NA
(61) Patent of Addition to Application Number :NA
Filing Date :NA
(62) Divisional to Application Number :NA
Filing Date :NA

(71)**Name of Applicant :**
1)BABCOCK & WILCOX POWER GENERATION GROUP, INC.
Address of Applicant :20 SOUTH, VAN BUREN AVENUE, BARBERTON, OH 44203-0351 UNITED STATES OF AMERICA.
(72)**Name of Inventor :**
1)GADGIL, R. MANDAR
2)GHORISHI, S. BEHROOZ
3)TONN, DONALD P.

(57) Abstract :
The present invention relates generally to the field of emission control equipment for boilers, heaters, kilns, or other flue gas-, or combustion gas-, generating devices (e.g., those located at power plants, processing plants, etc.) and, in particular to a new and useful method and apparatus for preventing the poisoning and/or contamination of an SCR catalyst. In another embodiment, the method and apparatus of the present invention is designed to protect an SCR catalyst, while simultaneously providing emission control.

No. of Pages : 31 No. of Claims : 29

(12) PATENT APPLICATION PUBLICATION
(21) Application No.539/KOLNP/2010 A
(19) INDIA
(22) Date of filing of Application :11/02/2010
(43) Publication Date : 28/08/2015

(54) Title of the invention : BASE STATION APAPRATUS, MOBILE STATION APPARATUS, AND COMMUNICATIONS CONTROL METHOD

(51) International classification	:H04Q 7/38,H4Q 11/00
(31) Priority Document No	:2007-211589
(32) Priority Date	:14/08/2007
(33) Name of priority country	:Japan
(86) International Application No	:PCT/JP2008/064366
Filing Date	:08/08/2008
(87) International Publication No	:WO 2009/022669
(61) Patent of Addition to Application Number	:NA
Filing Date	:NA
(62) Divisional to Application Number	:NA
Filing Date	:NA

(71)**Name of Applicant :**
1)NTT DOCOMO, INC.
Address of Applicant :11-1, NAGATACHO 2-CHOME, CHIYODA-KU, TOKYO 100-6150 JAPAN
(72)**Name of Inventor :**
1)ISHII, HIROYUKI

(57) Abstract :
A base station apparatus in a radio communications system is disclosed. The radio communications system has a mobile station apparatus and the base station apparatus in communication with the mobile station apparatus to which is applied a scheduling scheme which allocates a radio resource for each of constant periods. The base station apparatus includes a first transmitting unit which conducts a first transmission of a first signal for each of the constant periods based on the scheduling scheme; and a second transmitting unit which conducts second and subsequent transmissions at predetermined timings when an error occurs in the first transmission.

No. of Pages : 49 No. of Claims : 10

(12) PATENT APPLICATION PUBLICATION
(19) INDIA
(22) Date of filing of Application :14/01/2010
(21) Application No.157/KOLNP/2010 A
(43) Publication Date : 28/08/2015

(54) Title of the invention : PARACRINE SIGNALS FROM MESENCHYMAL FEEDER CELLS AND REGULATING EXPANSION AND DIFFERENTIATION OF HEPATIC PROGENITORS USING SAME

(51) International classification	:C12N 5/00,C12N 5/02
(31) Priority Document No	:60/944,435
(32) Priority Date	:15/06/2007
(33) Name of priority country	:U.S.A.
(86) International Application No	:PCT/US2008/007397
Filing Date	:13/06/2008
(87) International Publication No	:WO 2008/156667
(61) Patent of Addition to Application Number	:NA
Filing Date	:NA
(62) Divisional to Application Number	:NA
Filing Date	:NA

(71)**Name of Applicant :**
1)UNIVERSITY OF NORTH CAROLINA AT CHAPEL HILL
Address of Applicant :OFFICE OF TECHNOLOGY DEVELOPMENT, CB 4105, 308 BYNUM HALL, CHAPEL HILL, NC 27599-4105 UNITED STATES OF AMERICA.
(72)**Name of Inventor :**
1)REID, LOLA, M.
2)MCCLELAND, RANDALL, E.
3)URONIS, JOSHUA
4)YAO, HSIN-LEI
5)WAUTHIER, ELIANE

(57) Abstract :
A method is provided for controlling the survival, proliferation, and/or differentiation of hepatic progenitors in vitro by using specific types of mesenchymal feeder cells or one of more of the paracrine signals produced by those feeders.

No. of Pages : 46 No. of Claims : 31

(12) PATENT APPLICATION PUBLICATION
(19) INDIA
(22) Date of filing of Application :19/01/2010

(21) Application No.43/KOL/2010 A
(43) Publication Date : 28/08/2015

(54) Title of the invention : ELECTRIC MOTOR.

(51) International classification :G05B9/02
(31) Priority Document No :200910105141.9
(32) Priority Date :19/01/2009
(33) Name of priority country :China
(86) International Application No :NA
Filing Date :NA
(87) International Publication No : NA
(61) Patent of Addition to Application Number :NA
Filing Date :NA
(62) Divisional to Application Number :NA
Filing Date :NA

(71)**Name of Applicant :**
1)JOHNSON ELECTRIC S.A.
Address of Applicant :RUE FRITZ-COURVOISIER 40 CH-2300, LA CHAUX-DE-FONDS, SWITZERLAND
(72)**Name of Inventor :**
1)QIN, RUI RENG
2)YANG, LING
3)LIU, BAO TING
4)ZHOU, CHANG JIN

(57) Abstract :
A DC motor 12, has a stator housing 16 accommodating a permanent magnet stator and a rotor 15 rotatably mounted confronting the stator. The rotor 15 has a shaft 21, a rotor core 22 fitted to the shaft and having laminations forming salient poles or teeth 27. A commutator 23 is fitted to the shaft adjacent one end of the rotor core and windings 24 are wound about the teeth and terminated on segments of the commutator 23. The windings is formed by a number of coils with each coil being wound around a single tooth of the rotor and each tooth supporting a single coil. Brush gear comprising a plurality of brushes 26 in sliding contact with the commutator 23, transfers electrical power to the windings.

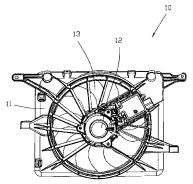

No. of Pages : 25 No. of Claims : 12

(12) PATENT APPLICATION PUBLICATION
(19) INDIA
(22) Date of filing of Application :02/03/2010
(21) Application No.792/KOLNP/2010 A
(43) Publication Date : 28/08/2015

(54) Title of the invention : FIBROUS SURGICALLY IMPLANTABLE MESH

(51) International classification :A61L 27/36
(31) Priority Document No :60/935,283
(32) Priority Date :03/08/2007
(33) Name of priority country :U.S.A.
(86) International Application No :PCT/IL2008/001061
Filing Date :03/08/2008
(87) International Publication No :WO 2009/019685
(61) Patent of Addition to Application Number :NA
Filing Date :NA
(62) Divisional to Application Number :NA
Filing Date :NA

(71)**Name of Applicant :**
1)NICAST LTD.
Address of Applicant :GLOBAL PARK, 2 YODFAT STREET, NORTHERN INDUSTRIAL ZONE, 71291 LOD ISRAEL
(72)**Name of Inventor :**
1)MARTINEZ, JEAN-PIERRE ELISHA
2)DUBSON, ALEXANDER
3)SHALEV, ALON

(57) Abstract :
A fibrous mesh surgically implantable into mammal internal cavity is disclosed. The mesh has a laminar extra-cellular-matrix-like structure. The mesh comprises a first layer characterized by porosity effective for mammal tissue infiltration into the first layer and a substantially non-porous second layer. The first layer is adapted to be surgically adhered to the mammal abdominal wall such that wall tissues infiltrate into the first layer while the second layer characterised by non-adhesion and adapted for nontraumatic contact to mammal viscera.

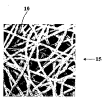

No. of Pages : 19 No. of Claims : 66

(12) PATENT APPLICATION PUBLICATION
(19) INDIA
(22) Date of filing of Application :05/03/2010
(21) Application No.853/KOLNP/2010 A
(43) Publication Date : 28/08/2015

(54) Title of the invention : ANTI-INFLAMMATORY COMPOUNDS AND USES THEREOF

(51) International classification :A01N 37/10
(31) Priority Document No :60/955,258
(32) Priority Date :10/08/2007
(33) Name of priority country :U.S.A.
(86) International Application No :PCT/US2008/072788
Filing Date :11/08/2008
(87) International Publication No :WO 2009/023631
(61) Patent of Addition to Application Number :NA
Filing Date :NA
(62) Divisional to Application Number :NA
Filing Date :NA

(71)**Name of Applicant :**
1)RIGAS, BASIL
Address of Applicant :18 BLUEBERRY RIDGE ROAD, SETAUKET, NEW YORK 11733-1504 UNITED STATES OF AMERICA.
(72)**Name of Inventor :**
1)RIGAS, BASIL

(57) Abstract :
Compounds of the general Formula (I) are disclosed with activity towards treating diseases related to inflammation, such as cancer, neurodegenerative and cardiovascular diseases. Pharmaceutical compositions and methods of use are also described.

No. of Pages : 72 No. of Claims : 20

(12) PATENT APPLICATION PUBLICATION
(19) INDIA
(22) Date of filing of Application :16/02/2010
(21) Application No.596/KOLNP/2010 A
(43) Publication Date : 28/08/2015

(54) Title of the invention : CORE ROD FORGINIG FOR PRECISE INTERNAL GEOMETRY

(51) International classification :B21J 13/02
(31) Priority Document No :60/980,531
(32) Priority Date :17/10/2007
(33) Name of priority country :U.S.A.
(86) International Application No :PCT/US2008/080282
Filing Date :17/10/2008
(87) International Publication No :WO 2009/052358
(61) Patent of Addition to Application Number :NA
Filing Date :NA
(62) Divisional to Application Number :NA
Filing Date :NA

(71)**Name of Applicant :**
1)GKN SINTER METALS, LLC
Address of Applicant :3300 UNIVERSITY DRIVE, AUBURN HILLS, MI 48326-2362 UNITED STATES OF AMERICA.
(72)**Name of Inventor :**
1)KNOTT, HENRY, J.

(57) Abstract :
A forging die tool set defines a cavity and includes a core rod in the cavity for shaping a void in a work piece. The core rod extends in a direction in which the work piece is introduced, compressed, and ejected from the cavity. The core rod includes an upper portion and a lower portion. The upper portion has a cross sectional shape that forms a certain shape in the work piece and a radially tapered section that tapers toward the lower portion of the core rod. The lower portion also has a cross sectional shape that forms a certain shape in the work piece, and the cross sectional shape of the upper portion differs from the cross sectional shape of the lower portion, the lower portion being a more wear resistant shape characterized by larger radii and the upper portion being a finishing shape with smaller radii for shaping the final form of the forged work piece.

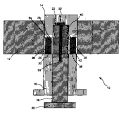

No. of Pages : 19 No. of Claims : 25

(12) PATENT APPLICATION PUBLICATION
(21) Application No.597/KOLNP/2010 A
(19) INDIA
(22) Date of filing of Application :16/02/2010
(43) Publication Date : 28/08/2015

(54) Title of the invention : PARKING BRAKE MODULATOR AND USE OF A BRAKE MODULATOR AS A PARKING BRAKE MODULATOR

(51) International classification	:B60T 7/20,B60T 13/68
(31) Priority Document No	:10 2007 047 692.4
(32) Priority Date	:05/10/2007
(33) Name of priority country	:Germany
(86) International Application No	:PCT/EP2008/005218
Filing Date	:26/06/2008
(87) International Publication No	:WO 2009/046779
(61) Patent of Addition to Application Number	:NA
Filing Date	:NA
(62) Divisional to Application Number	:NA
Filing Date	:NA

(71)**Name of Applicant :**
1)WABCO GMBH
Address of Applicant :AM LINDENER HAFEN 21, 30453 HANNOVER GERMANY
(72)**Name of Inventor :**
1)FÖRSTER, HENNING
2)ROSENDAHL, HARTMUT
3)STRACHE, WOLGANG

(57) Abstract :
The invention relates to a parking brake modulator 1 for controlling a parking brake function of brakes of a vehicle, to a use of a brake modulator as a parking brake modulator 1 of said type, and to a brake system having said parking brake modulator 1. The parking brake modulator 1 has at least one compressed air inlet 2 via which compressed air is provided to the parking brake modulator 1. The parking brake modulator 1 also has at least one first electromagnetically actuable valve device 23, one second electromagnetically actuable valve device 24 and one third electromagnetically actuable valve device 25. Via the first valve device 23, a pneumatic pressure in a compressed air line 30, 34 can be output, which is provided at a first compressed air outlet 3 of the parking brake modulator 1. Via the second valve device 24, a pneumatic pressure in a second compressed air line 31, 35 can be output, which is provided at a second compressed air outlet 4 of the parking brake modulator 1. When the first valve device 23 is electrically de-energized and the second valve device 24 is electrically de-energized, the first compressed air line 30, 34 can be deaerated via the first valve device 23 and the second compressed air line 31, 35 can be deaerated via the second valve device 24. When likewise the first valve device 23 is electrically de- energized and the second valve device 24 is electrically de-energized and the third valve device 25 is simultaneously electrically energized, in contrast, the first compressed air line 30 can be aerated via the first valve device 23 and the second compressed air line 31 can be aerated via the second valve device 24.

No. of Pages : 40 No. of Claims : 14

(12) PATENT APPLICATION PUBLICATION
(19) INDIA
(22) Date of filing of Application :18/01/2010
(21) Application No.195/KOLNP/2010 A
(43) Publication Date : 28/08/2015

(54) Title of the invention : NOVEL SYNTHETIC AGONISTS OF TLR9

(51) International classification :C12Q 1/68
(31) Priority Document No :60/953,251
(32) Priority Date :01/08/2007
(33) Name of priority country :U.S.A.
(86) International Application No :PCT/US2008/071738
Filing Date :31/07/2008
(87) International Publication No :WO 2009/018431
(61) Patent of Addition to Application Number :NA
Filing Date :NA
(62) Divisional to Application Number :NA
Filing Date :NA

(71)**Name of Applicant :**
1)IDERA PHARMACEUTICALS, INC.
Address of Applicant :167 SIDNEY STREET, CAMBRIDGE, MA 02139 UNITED STATES OF AMERICA.
(72)**Name of Inventor :**
1)KANDIMALLA, EKAMBAR, R.
2)REDDY PUTTA, MALLIKARJUNA
3)WANG, DAQING
4)YU, DONG
5)LAKSHMI, BHAGAT
6)AGRAWAL, SUDHIR

(57) Abstract :
The invention relates to synthetic chemical compositions that are useful for modulation of Toll-Like Receptor (TLR)-mediated immune responses. In particular, the invention relates to agonists of Toll-Like Receptor 9 (TLR9) that generate unique cytokine and chemokine profiles.

No. of Pages : 72 No. of Claims : 9

(12) PATENT APPLICATION PUBLICATION
(19) INDIA
(22) Date of filing of Application :26/11/2009
(21) Application No.4098/KOLNP/2009 A
(43) Publication Date : 28/08/2015

(54) Title of the invention : FORMULATION OF MENINGITIS VACCINES

(51) International classification :A61K 39/095
(31) Priority Document No :60/933,235
(32) Priority Date :04/06/2007
(33) Name of priority country :U.S.A.
(86) International Application No :PCT/IB2008/002121
Filing Date :04/06/2008
(87) International Publication No :WO 2008/149238
(61) Patent of Addition to Application Number :NA
Filing Date :NA
(62) Divisional to Application Number :NA
Filing Date :NA

(71)**Name of Applicant :**
1)NOVARTIS AG
Address of Applicant :LICHSTRASSE 35, CH-4056 BASEL SWITZERLAND
(72)**Name of Inventor :**
1)CONTORNI, MARIO
2)COSTANTINO, PAOLO

(57) Abstract :
A liquid Hib component is used to reconstitute a lyophilised meningococcal component, thereby producing a combined meningitis vaccine. A lyophilised meningococcal component can also be reconstituted with an oil-in-water emulsion.

No. of Pages : 28 No. of Claims : 26

(12) PATENT APPLICATION PUBLICATION
(19) INDIA
(22) Date of filing of Application :05/03/2010

(21) Application No.852/KOLNP/2010 A
(43) Publication Date : 28/08/2015

(54) Title of the invention : AUTOMATIC INJECTION DEVICE WITH NEEDLE INSERTION

(51) International classification :A61M 5/20,A61M 5/32
(31) Priority Document No :60/973,193
(32) Priority Date :18/09/2007
(33) Name of priority country :U.S.A.
(86) International Application No :PCT/EP2008/061863
Filing Date :08/09/2008
(87) International Publication No :WO 2009/037141
(61) Patent of Addition to Application Number :NA
Filing Date :NA
(62) Divisional to Application Number :NA
Filing Date :NA

(71)**Name of Applicant :**
1)SHL GROUP AB
Address of Applicant :BOX 1240, AUGUSTENDALSVÄGEN 19, S-SE 131 28 NACKA STRAND SWEDEN
(72)**Name of Inventor :**
1)KRONESTEDT, VICTOR

(57) Abstract :
The present invention relates to an injection device comprising a housing (10, 100), a container holder (12) arranged within said housing having a container (20) adapted to contain medicament to be delivered through a needle, plunger drive means (40), an energy accumulating member (80) adapted to accumulate and transfer energy to said plunger drive means wherein said device further comprises container driver means (30) arranged and designed to be connected to the plunger drive means and to the container holder for holding the container and its needle stationary within said housing before said energy is provided to the drive means and for urging the container towards the proximal end of the device when said energy is provided to the drive means whereby a needle penetration and respectively an injection are performed.

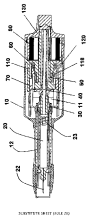

No. of Pages : 20 No. of Claims : 9

(12) PATENT APPLICATION PUBLICATION
(19) INDIA
(22) Date of filing of Application :14/01/2010
(21) Application No.163/KOLNP/2010 A
(43) Publication Date : 28/08/2015

(54) Title of the invention : REFRIGERATION CIRCUIT

(51) International classification	:F25B 39/00,F28F 1/08
(31) Priority Document No	:MI2007A001419
(32) Priority Date	:16/07/2007
(33) Name of priority country	:Italy
(86) International Application No	:PCT/IB2008/001795
Filing Date	:08/07/2008
(87) International Publication No	:WO 2009/010839
(61) Patent of Addition to Application Number	:NA
Filing Date	:NA
(62) Divisional to Application Number	:NA
Filing Date	:NA

(71)**Name of Applicant :**
1)INDUSTRIE ILPEA S.P.A.
Address of Applicant :VIALE INDUSTRIAL, 887, I-21023 MALGESSO ITALY
(72)**Name of Inventor :**
1)CITTADINI, PAOLO

(57) Abstract :
A refrigeration circuit (3) for household appliances comprises a first heat exchanger (5) or condenser in fluid communication with a compressor (4) for allowing the cooling and the consequent condensation of the cooling fluid going through, and a second heat exchanger (7) or evaporator in fluid communication with the first exchanger (5) through a circuit with a special device (6) suitable for decreasing the pressure of the cooling fluid at a space (2) to be cooled. The second exchanger (7) allows the cooling fluid to evaporate, absorbing heat, thus cooling the space (2) and returning through the tubing (17) to the compressor (4). At least one of the heat exchangers (5, 7) comprises a plastic tubing (9), at least a portion whereof exhibits such corrugated profile as to impart flexibility thereof and/or increase the thermal exchange surface.

No. of Pages : 61 No. of Claims : 23

(12) PATENT APPLICATION PUBLICATION
(19) INDIA
(22) Date of filing of Application :05/03/2010
(21) Application No.855/KOLNP/2010 A
(43) Publication Date : 28/08/2015

(54) Title of the invention : MEASURING DEVICE FOR MEASURING A FOCUSED LASER BEAM

(51) International classification :G01J 1/42
(31) Priority Document No :07017968.4
(32) Priority Date :13/09/2007
(33) Name of priority country :EUROPEAN UNION
(86) International Application No :PCT/EP2008/007575
Filing Date :12/09/2008
(87) International Publication No :WO2009036932
(61) Patent of Addition to Application Number :NA
Filing Date :NA
(62) Divisional to Application Number :NA
Filing Date :NA

(71)**Name of Applicant :**
1)WAVELIGHT AG
Address of Applicant :AM WOLFSMANTEL 5, 91058 ERLANGEN, GERMANY
(72)**Name of Inventor :**
1)ZERL, BERND
2)KITTELMANN, OLAF

(57) Abstract :
According to an embodiment, a measuring device for measuring a laser beam comprises a magnification lens system with a total of two lenses (10, 12) which are arranged in series in the beam path of the laser beam and whose foci are coinciding, as well as a camera (74) which is arranged behind the two lenses (10, 12) in the focus of the last lens (12) and includes an electronic image sensor (14) which generates an electronic image of the magnified laser beam. The lenses (10, 12) together with the camera (74) are adjustable along the beam path relative to a reference point (46) of the measuring device, for the purpose of locating the beam waist of the laser beam and of determining a diameter profile of the laser beam. The measuring device further comprises an adapter (42) enclosing the beam path for coupling the measuring device to a laser system which provides the laser beam. The adapter (42) forms an abutment surface (46) for the laser system, which is axially directed with respect to a beam axis (16) of the laser beam, and permits the measuring device to be coupled in situ at the installation site of the laser system.

No. of Pages : 24 No. of Claims : 18

(12) PATENT APPLICATION PUBLICATION
(19) INDIA
(22) Date of filing of Application :08/03/2010
(21) Application No.858/KOLNP/2010 A
(43) Publication Date : 28/08/2015

(54) Title of the invention : SUPPLY NETWORK FOR A GROUP ANTENNA

(51) International classification :H01Q 21/08
(31) Priority Document No :10 2007 047 741.6
(32) Priority Date :05/10/2007
(33) Name of priority country :Germany
(86) International Application No :PCT/EP2008/008159
Filing Date :25/09/2008
(87) International Publication No :WO 2009/046886
(61) Patent of Addition to Application Number :NA
Filing Date :NA
(62) Divisional to Application Number :NA
Filing Date :NA

(71)**Name of Applicant :**
1)KATHREIN-WERKE KG
Address of Applicant :ANTON-KATHREIN-STRASSE 1-3, D-83022 ROSENHEIM GERMANY
(72)**Name of Inventor :**
1)GÖTTL, MAXIMILIAN
2)BOSS, MICHAEL

(57) Abstract :
The invention relates to a group antenna having at least two transducers (3) disposed offset from one another, and having a network (7) provided to supply the transducers (3), said network comprising coaxial cables (11.1, 11.2...) running between a distributor and/or summation circuit (9) and the access, connection, and/or supply points (13) of the transducer (3) in question. The invention is characterized in that the network (7) comprises at least two different types of coaxial cable (11.1, 11.2...) characterized by different phase speeds.

No. of Pages : 25 No. of Claims : 14

(12) PATENT APPLICATION PUBLICATION
(21) Application No.221/KOL/2014 A
(19) INDIA
(22) Date of filing of Application :21/02/2014
(43) Publication Date : 28/08/2015

(54) Title of the invention : ANTI-PROLIFERATIVE AGENT AND METHOD OF PREPARING THE SAME

(51) International classification	:A61L 27/00
(31) Priority Document No	:NA
(32) Priority Date	:NA
(33) Name of priority country	:NA
(86) International Application No	:NA
Filing Date	:NA
(87) International Publication No	: NA
(61) Patent of Addition to Application Number	:NA
Filing Date	:NA
(62) Divisional to Application Number	:NA
Filing Date	:NA

(71)**Name of Applicant :**
1)DR.SAMIT KUMAR NANDI
Address of Applicant :ANDAMAN ABASAN, FLAT-5, BLOCK-B, 229, R.B.C.ROAD, KOLKATA-700028, WEST BENGAL, INDIA.
2)DR.UTTAM DUTTA
3)DR.PRASENJIT MUKHERJEE
4)DR.SUBHASIS ROY
5)DR.SUBHASIS BATABYAL
(72)**Name of Inventor :**
1)DR. SAMIT KUMAR NANDI
2)DR. UTTAM DUTTA

(57) Abstract :
The present invention relates to a anti-proliferative agent which act as potent osteogenic inhibitor. More particularly, the present invention relates to the anti- proliferative agent which prepared from the extract of the marine gastropod mollusc having therapeutic value. Moreover this invention also relates to the process of preparing the above agent from the whole body extract (without shell) of Terebra dislocata (Say, 1822) as Terebra dislocata Bioactive Compound (TdBC).

No. of Pages : 23 No. of Claims : 7

(12) PATENT APPLICATION PUBLICATION
(19) INDIA
(22) Date of filing of Application :05/11/2009
(21) Application No.3848/KOLNP/2009 A
(43) Publication Date : 28/08/2015

(54) Title of the invention : REFRIGERANT HOSE

(51) International classification :F16L11/04
(31) Priority Document No :NA
(32) Priority Date :NA
(33) Name of priority country :NA
(86) International Application No :PCT/JP2008/073747
Filing Date :26/12/2008
(87) International Publication No : NA
(61) Patent of Addition to Application Number :NA
Filing Date :NA
(62) Divisional to Application Number :NA
Filing Date :NA

(71)**Name of Applicant :**
1)THE YOKOHAMA RUBBER CO., LTD.
Address of Applicant :36-11, SHIMBASHI 5-CHOME, MINATO-KU, TOKYO 105-8685 JAPAN
(72)**Name of Inventor :**
1)OISHI, HIDEYUKI
2)YAMAKAWA, KAZUTO
3)SATO, KOJI

(57) Abstract :
An object of the present invention is to provide a hose which has a gas barrier layer and a rubber layer adhered without using an adhesive, and which has a dramatically improved durability compared to the conventional hose. The hose of the present invention is a refrigerant hose having an inner layer comprising a gas barrier layer and a rubber layer adhered to the outer surface of the gas barrier layer. The gas barrier layer comprises a modified polyamide prepared by blending a polyamide and a carboxyl group-containing modified polyolefin, and the rubber layer comprises a rubber composition prepared by blending a particular amount of an alkylphenol formaldehyde resin and a particular amount of carbon black with a raw rubber. The raw rubber comprises a BIMS, a copolymer rubber which is a butyl rubber and/or a halogenated butyl rubber, and an EPDM, the carbon black is specified, and no adhesive layer is formed between the gas barrier layer and the rubber layer.

No. of Pages : 42 No. of Claims : 3

(12) PATENT APPLICATION PUBLICATION
(19) INDIA
(22) Date of filing of Application :12/04/2010
(21) Application No.412/KOL/2010 A
(43) Publication Date : 28/08/2015

(54) Title of the invention : A METHOD PERFORMED IN A REPOSITORY SERVER

(51) International classification :G06F1/00
(31) Priority Document No :10/839,938
(32) Priority Date :06/05/2004
(33) Name of priority country :U.S.A.
(86) International Application No :NA
Filing Date :NA
(87) International Publication No : NA
(61) Patent of Addition to Application Number :NA
Filing Date :NA
(62) Divisional to Application Number :3645/KOLNP/2006
Filed on :05/12/2006

(71)**Name of Applicant :**
1)ORACLE INTERANTIONAL CORPORATION
Address of Applicant :500 ORACLE PARKWAY, M/S 5OP7 REDWOOD SHORES, CA 94065, UNITED STATES OF AMERICA.
(72)**Name of Inventor :**
1)WU ZHE

(57) Abstract :
The instant invention discloses a method performed in a repository server that is accessible via a network and that contains stored copies of documents that are obtained from other servers and are identified in the repository server by identifiers of making other stored copies that are similar to a given stored copy available to a client of the repository server, the method comprising the steps of: computing similarities between the given stored copy and other stored copies; relating the stored copy to similar other stored copies; responding to an identifier for the given stored copy received from the client by providing a list of the identifiers to the similar other stored copies; and responding to an identifier which has been selected in the client from the provided list by providing the other stored copy specified by the identifier to the client.

No. of Pages : 45 No. of Claims : 7

(12) PATENT APPLICATION PUBLICATION
(19) INDIA
(22) Date of filing of Application :20/11/2000
(21) Application No.IN/PCT/2000/533/KOL A
(43) Publication Date : 28/08/2015

(54) Title of the invention : 'AN IMPROVED ROTARY PISTON MACHINE'

(51) International classification :F04C18/063
(31) Priority Document No :9808780
(32) Priority Date :25/04/1998
(33) Name of priority country :U.K.
(86) International Application No :PCT/GB1999/01290
Filing Date :26/04/1999
(87) International Publication No :WO 1999/56013
(61) Patent of Addition to Application Number :NA
Filing Date :NA
(62) Divisional to Application Number :NA
Filing Date :NA

(71)**Name of Applicant :**
1)CERES IPR LIMITED
Address of Applicant :NORTHERN TECHNOLOGIES, NETHERFIELD ROAD, NELSON, LANCASHIRE BB9 9AR, UNITED KINGDOM
(72)**Name of Inventor :**
1)WESLAKE-HILL, IAN.,

(57) Abstract :
This invention relates to an improved rotary piston machine comprising two variable- volume units (1,4) each unit (1,4) having a rotary multi-lobed epitrochoidal chamber (3,6) and a multi-sided rotary piston (2,5) forming therein a plurality of individual sub-chambers (3a, 3b,3c,6a,6b,6c) 5y its co-operation with the periphery of an associated chamber, the numher (n+1) of piston sides being greater by one than the number (n) of epitrochoid ares, wherein the two chambers (3,6) are constrained to rotate at a first common speed about a first effective common axis through their centers while the two pistons (2,5) are constrained to rotate at a second common speed about a second effective common axis through their centers in a same direction, the ratio of first to second common speeds being n+1:n, wherein each chamber (2,5) has a plurality (n) of dual-function ports (7,8,9,10) enabling connection between the chambers (2,5) via ducts (10,11) and wherein said ducts (10,11) each contain a regenerators, enabling one variable-volume unit (1) to perform intake, expansion and exhaust, while the other unit (4) performs intake, compression and exhaust, as a result of the relative rotation and port positions.

No. of Pages : 23 No. of Claims : 2

(12) PATENT APPLICATION PUBLICATION
(21) Application No.204/KOL/2010 A
(19) INDIA
(22) Date of filing of Application :02/03/2010
(43) Publication Date : 28/08/2015

(54) Title of the invention : SHAPING MACHINE, AND METHOD FOR PRODUCING A MOULDED PACKAGE

(51) International classification	:B65B43/08	(71)**Name of Applicant :**
(31) Priority Document No	:10 2009 018 214.4	**1)ZAHORANSKY AG** Address of Applicant :ANTON-ZAHORANSKY-STR. 1, 79674 TODTNAU GERMANY
(32) Priority Date	:21/04/2009	(72)**Name of Inventor :**
(33) Name of priority country	:Germany	**1)REINHARD SCHNURR**
(86) International Application No	:NA	
Filing Date	:NA	
(87) International Publication No	: NA	
(61) Patent of Addition to Application Number	:NA	
Filing Date	:NA	
(62) Divisional to Application Number	:NA	
Filing Date	:NA	

(57) Abstract :
A shaping machine (1) has two shaping parts (2, 3) which are movable towards each other and are designed for thermoplastic shaping of a film material (4), wherein an injection moulding device (5) is coupled or attached to at least one shaping part (2, 3) and is designed and equipped to inject plastic material (31) onto the film material (4) arranged between the shaping parts (2, 3).

No. of Pages : 27 No. of Claims : 21

(12) PATENT APPLICATION PUBLICATION
(21) Application No.414/KOL/2010 A
(19) INDIA
(22) Date of filing of Application :12/04/2010
(43) Publication Date : 28/08/2015

(54) Title of the invention : A METHOD OF MAKING VERSIONS OF A DOCUMENT THAT ARE STORED IN A REPOSITORY SERVER

(51) International classification :G06F1/00
(31) Priority Document No :10/839,938
(32) Priority Date :06/05/2004
(33) Name of priority country :U.S.A.
(86) International Application No :NA
Filing Date :NA
(87) International Publication No : NA
(61) Patent of Addition to Application Number :NA
Filing Date :NA
(62) Divisional to Application Number :3645/KOLNP/2006
Filed on :05/12/2006

(71)**Name of Applicant :**
1)ORACLE INTERNATIONAL CORPORATION
Address of Applicant :500 ORACLE PARKWAY, M/S 5OP7 REDWOOD SHORES, CA 94065, UNITED STATES OF AMERICA.
(72)**Name of Inventor :**
1)WU ZHE

(57) Abstract :
The instant invention discloses a method of making versions of a document that are stored in a repository server that is accessible via a network accessible to a client of the repository server, the document being or having been formerly stored in another server that was accessible via the network and being or having been accessed in the other server by specifying a first document locator, each one of the stored versions being related to the first document locator and to an identifier in the repository server and the method comprising the steps performed in the repository server of: receiving the identifier for a given stored version from the client; using the first document locator to which the given version is related to find other stored versions related to the same first document locator; and providing a list of identifiers for the other stored versions to the client, whereby the client may access a stored version of the other stored versions.

No. of Pages : 45 No. of Claims : 6

(12) PATENT APPLICATION PUBLICATION
(19) INDIA
(22) Date of filing of Application :12/04/2010
(21) Application No.413/KOL/2010 A
(43) Publication Date : 28/08/2015

(54) Title of the invention : A METHOD OF COMPARING DIGITAL DOCUMENTS

(51) International classification :G06Q10/08
(31) Priority Document No :10/839,938
(32) Priority Date :06/05/2004
(33) Name of priority country :U.S.A.
(86) International Application No :NA
Filing Date :NA
(87) International Publication No : NA
(61) Patent of Addition to Application Number :NA
Filing Date :NA
(62) Divisional to Application Number :3645/KOLNP/2006
Filed on :05/12/2006

(71)**Name of Applicant :**
1)ORACLE INTERNATIONAL CORPORATION
Address of Applicant :500 ORACLE PARKWAY, M/S 5OP7 REDWOOD SHORES, CA 94065, UNITED STATES OF AMERICA.
(72)**Name of Inventor :**
1)WU ZHE

(57) Abstract :
The instant invention discloses a method of comparing digital documents, the method comprising the steps of: making fingerprints of the documents to be compared; and comparing the fingerprints to determine a similarity value indicating a degree of similarity of the documents being compared, the similarity value being capable of expressing degrees of similarity in addition to identical or not identical.

No. of Pages : 48 No. of Claims : 21

(12) PATENT APPLICATION PUBLICATION
(19) INDIA
(22) Date of filing of Application :18/01/2010
(21) Application No.39/KOL/2010 A
(43) Publication Date : 28/08/2015

(54) Title of the invention : HEAT EXCHANGER TUBE AND ITS MANUFACTURING PROCESS

(51) International classification :F28D9/00
(31) Priority Document No :102009007446.5
(32) Priority Date :04/02/2009
(33) Name of priority country :Germany
(86) International Application No :NA
Filing Date :NA
(87) International Publication No : NA
(61) Patent of Addition to Application Number :NA
Filing Date :NA
(62) Divisional to Application Number :NA
Filing Date :NA

(71)**Name of Applicant :**
1)WIELAND-WERKE AG
Address of Applicant :GRAF-ARCO-STRABE 36 ULM, GERMANY
(72)**Name of Inventor :**
1)BEUTLER, ANDREAS
2)HAJAL, JEAN EI
3)LUTZ, RONALD

(57) Abstract :
The invention pertains to a heat exchanger tube with a tube axis, a tube wall with a tube exterior and a tube interior, whereby on the tube interior from the tube wall, axially parallel or helix shaped circumferential inner ribs are formed with grooves in between the respective adjacent inner ribs, whereby the helical angle of the inner ribs measured with respect to the tube axis are less than or equal to 45 °, the region of the inner ribs which lies away from the tube wall is primarily deformed on one side asymmetrically at regular intervals in the circumferential direction of the tube and the deformed material of the inner ribs forms projections over the grooves, that the projections respectively run along an inner rib over a limited deformation zone, that within the deformation zone the shape of the deformation changes continuously and that the distortion is more in the middle of the deformation zone than at the edges and that between the groove base, the sides of the inner ribs and the formed projections, hollow spaces are created which allow the formation of bubbles. Another aspect of the invention includes a process for manufacturing a heat exchanger tube with helix shaped circumferential integral outer ribs on the exterior of the tube.

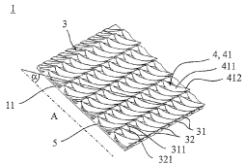

No. of Pages : 22 No. of Claims : 11

PUBLICATION U/R 84(3) IN RESPECT OF APPLICATION FOR RESTORATION OF PATENT(CHENNAI)

Notice is hereby given that any person interested in opposing the following applications for Restoration of Patent under Section 60 of the Patent Act, 1970, may at any time within 2 months from the date of Publication of this notice, give notice to the Controller of Patents at the appropriate office on the prescribed Form 14 under Rule 85 of the Patents (Amendment) Rules, 2006.

PATENT NUMBER	APPLICANT	TITLE	DATE OF CESSATION	APPROPRIATE OFFICE
241755	M/s.SUDERSHAN BIOTECH LTD.	HEPATITIS C VIRUS VACCINE	07/06/2013	CHENNAI
230733	M/s. QUARDLOCK ApS	A COMPUTER SYSTEM AND AN APPARATUS FOR USE IN A COMPUTER SYSTEM	15/03/2013	CHENNAI
232203	M/s. SANGART, INC.	A BLOOD SUBSTITUTE PRODOUCT COMPRISING SURFACE MODIFIED OXYGENATED HEMOGLOBIN	10/01/2014	CHENNAI
229774	M/s.NICOX S.A.	STATIN DERIVATIVES	24/05/2013	CHENNAI
253039	Mr. SRIRAM RAMANI	METHODS AND SYSTEM FOR DYNAMIC DATABASE CONTENT PERSISTENCE AND INFORMATION MANAGEMENT	16/11/2013	CHENNAI

Publication Under Section 43(2) in Respect of the Grant

Following Patents have been granted and any person interested in opposing these patents under Section 25(2) may at any time within one year from the date of this issue, give notice to the Controller of Patents at the appropriate office, on the prescribed form-7 along with written statement and evidence, if any.

Serial Number	Patent Number	Application Number	Date of Application	Date of Priority	Title of Invention	Name of Patentee	Date of Publication of Abstract u/s 11(A)	Appropriate Office
1	268197	1118/DEL/2008	02/05/2008 16:21:13		AN IMPROVED PROCESS FOR PREPARATION OF SYNTHETIC CALCIUM SILICATE HYDRATE	COUNCIL OF SCIENTIFIC & INDUSTRIAL RESEARCH	23/04/2010	DELHI
2	268198	4547/DELNP/2008	30/11/2006	30/11/2005	MULTI-STAGE RECEIVER FOR WIRELESS COMMUNICATION	QUALCOMM INCORPORATED	15/08/2008	DELHI
3	268203	2505/DEL/2005	16/09/2005	28/09/2004	DEVICE FOR LIMITING TURBINE OVERSPEED IN A TURBOMACHINE	SNECMA	02/10/2009	DELHI
4	268205	2461/DEL/2007	26/11/2007 15:24:53		SYNTHESIS OF CARBON MICRO-FLOWERS BY CATALYTIC CHEMICAL VAPOR DEPOSITION (CCVD) METHOD WITHOUT SULPHUROUS PROMOTERS	DIRECTOR GENERAL, DEFENCE RESEARCH & DEVELOPMENT ORGANISATION	19/06/2009	DELHI
5	268206	1397/DELNP/2009	17/01/2008	17/01/2007	SULFUR COMPONENT DETECTION APPARATUS	TOYOTA JIDOSHA KABUSHIKI KAISHA	19/06/2009	DELHI
6	268207	1956/DELNP/2007	15/09/2005	16/09/2004	METHOD AND APPARATUS FOR REMOVING SHEETS OF FIBRES FROM BANANA PLANTS FOR THE PRODUCTION OF PAPER PRODUCTS	PAPYRUS AUSTRALIA LIMITED	17/08/2007	DELHI
7	268208	6132/DELNP/2008	23/01/2007	24/01/2006	CURABLE COMPOSITON	HUNTSMAN ADVANCED MATERIALS (SWITZERLAND) GMBH	24/10/2008	DELHI
8	268212	4060/DELNP/2007	10/11/2005	10/12/2004	MANAGEMENT AND NAVIGATION SYSTEM FOR BLIND	KATES, LAWRENCE	31/08/2007	DELHI
9	268219	2362/DEL/2009	17/11/2009 12:04:21		A NOVEL PROCESS FOR SYNTHESIS OF PURE SODIUM 2-ETHYL HEXANOATE SALT	VARDHMAN CHEMTECH LTD	20/05/2011	DELHI
10	268220	132/DELNP/2007	03/06/2005	07/06/2004	PLANAR HIGH VOLTAGE TRANSFORMER DEVICE	APPLIED PLASMA PHYSICS ASA	18/05/2007	DELHI
11	268225	1145/DEL/2007	30/05/2007 12:55:21	08/05/2007	EMBROIDERY MACHINE AND FABRIC APPLICATION METHOD THEREFOR	KABUSHIKI KAISHA BARUDAN	26/12/2008	DELHI

12	268229	6903/DELNP/2006	20/05/2005	20/05/2004	A METHOD AND SYSTEM FOR IDENTIFYING PROTEINS IN MIXTURES	WATERS TECHNOLOGIES CORPORATION	31/08/2007	DELHI
13	268235	277/DEL/2007	13/02/2007 11:51:06		NOVEL BENZOTHIAZOLE OR BENZOXAZOLE LINKED PYRROLO [2,1-C][1,4] BENZODIAZEPINE HYBRID AS POTENTIAL ANTITUMUOR AGENT AND PROCESS FOR THE PREPARATION THEREOF	COUNCIL OF SCIENTIFIC AND INDUSTRIAL RESEARCH	05/09/2008	DELHI
14	268236	6974/DELNP/2008	25/01/2007	25/01/2006	EMULSION	AYANDA GROUP AS	24/10/2008	DELHI
15	268237	3642/DELNP/2010	10/11/2008	09/11/2007	PREPARATION OF SATURATED IMIDAZOLINIUM SALTS AND RELATED COMPOUNDS	MATERIA, INC.,CALIFORNIA INSTITUTE OF TECHNOLOGY	04/02/2011	DELHI
16	268238	951/DELNP/2004	18/07/2002	19/10/2001	A PROCESS FOR THE PREPARATION OF THE 14BETA-HYDROXY-BACCATIN III-1,14-CARBONATE	INDENA S.P.A.	08/02/2008	DELHI
17	268239	2445/DELNP/2010	17/10/2008	18/10/2007	3-ALKOXY-1-PHENYLPYRAZOLE DERIVATIVES AND PESTICIDES	KUMIAI CHEMICAL INDUSTRY CO. LTD.,IHARA CHEMICAL INDUSTRY CO. LTD.	16/03/2012	DELHI
18	268240	5165/DELNP/2006	07/04/2005	08/04/2004	MEMBRANE STACKS.	NATRIX SEPARATIONS INC.	03/08/2007	DELHI
19	268241	1627/DEL/2004	27/08/2004		A PROCESS FOR PREPARATION OF A COMPOSITE POLYMER SHEET AND A SHEET THEREOF	INDIAN INSTITUTE OF TECHNOLOGY, DELHI	19/02/2010	DELHI
20	268242	889/DEL/2008	04/04/2008 14:03:20	16/04/2007	WATER TREATMENT PROCESS	ROHM AND HAAS COMPANY	14/11/2008	DELHI
21	268244	4485/DELNP/2007	27/01/2006	28/01/2005	TWO-PART STERILANT SYSTEM	TRISTEL PLC	31/08/2007	DELHI
22	268246	1612/DELNP/2008	26/07/2006	26/07/2005	NITROCATECHOL DERIVATIVES AS COMT INHIBITORS	BIAL-PORTELA & CA S.A.	25/07/2008	DELHI
23	268247	1678/DEL/2010	19/07/2010 15:24:44	05/08/2009	CORROSION-RESISTANT COATING COMPOSITION	KANSAI PAINT CO., LTD.	20/09/2013	DELHI
24	268248	4434/DELNP/2008	08/11/2006	20/12/2005	COMMAND DEVICE WITH SWITCHING ELEMENT MONITORING	SIEMENS AKTIENGESELLSCHAFT	15/08/2008	DELHI
25	268253	2503/DEL/2004	16/12/2004		A PROCESS FOR PREPARATION OF MICRON SIZED HIGH MOLECULAR WEIGHT POLYMER	INDIAN INSTITUTE OF TECHNOLOGY	03/11/2006	DELHI
26	268257	4761/DELNP/2008	12/12/2006	20/12/2005	AN APPARATUS FOR PROVIDING ENHANCED POSITION LOCATION IN WIRELESS COMMUNICATIONS SYSTEM	QUALCOMM INCORPORATED	15/08/2008	DELHI

27	268259	4147/DELNP/2008	15/11/2006	15/11/2005	AN APPARATUS FOR PERFORMING EQUALIZATION	QUALCOMM INCORPORATED	15/08/2008	DELHI
28	268261	3485/DELNP/2008	30/10/2006	26/10/2005	AN APPARATUS FOR PERFORMING CHANNEL AND NOISE ESTIMATION FOR A MULTIPLE -INPUT MULTIPLE - OUTPUT(MIMO) TRANSMISSION	QUALCOMM INCORPORATED	15/08/2008	DELHI
29	268263	5172/DELNP/2007	12/12/2005	10/12/2004	A BLANK AND AN ASSEMBLY FOR A COFFIN	APOGEE INTERNATIONAL PTY LTD.	17/08/2007	DELHI
30	268264	4886/DELNP/2007	26/12/2005	27/12/2004	PROCESS FOR MAKING A GERMANIUM-ZEOLITE'	SAUDI BASIC INDUSTRIES CORPORATION.,	17/08/2007	DELHI
31	268268	2806/DELNP/2006	16/11/2004	17/11/2003	TRANSMISSION METHOD AND TRANSMITTER	NOKIA CORPORATION	03/08/2007	DELHI
32	268269	6115/DELNP/2008	31/01/2006	31/01/2006	A METHOD FOR FORMING AN EXCITATION SIGNAL TO EXCITE AN AUDIO SYNTHESIS FILTER AND A SYSTEM TO IMPLEMENT THE METHOD	SIEMENS ENTERPRISE COMMUNICATIONS GMBH & CO.KG	26/09/2008	DELHI
33	268273	6160/DELNP/2008	15/12/2006	16/12/2005	METHODS FOR OBTAINING IMMORTALIZED ANTIBODY SECRETING CELLS	RIBOVAX BIOTECHNOLOGIES SA.	24/10/2008	DELHI
34	268274	3642/DELNP/2007	07/11/2005	19/11/2004	DEVICE AND METHOD FOR FORMING A WOVEN OBJECT WITH OFF-AXIS REINFORCEMENT	ALBANY ENGINEERED COMPOSITES, INC.	24/08/2007	DELHI
35	268275	1579/DEL/2003	26/02/2003	07/09/2000	FLUID DISPENSER DEVICE	VALOIS S.A.S	30/12/2005	DELHI
36	268279	510/DELNP/2010	28/07/2008	31/07/2007	PHOSPHORUS MODIFIED MOLECULAR SIEVES, THEIR USE IN CONVERSION OF ORGANICS TO OLEFINS	TOTAL PETROCHEMICALS RESEARCH FELUY	30/07/2010	DELHI
37	268281	1720/DEL/2004	13/09/2004	22/09/2003	A JET ENGINE WITH A TUBE PROVIDED BETWEEN THE ORIFICE IN THE STRUT AND OUTLET VENT	SNECMA.,	18/08/2006	DELHI
38	268283	725/DELNP/2007	21/07/2005	21/07/2004	A SYSTEM AND METHOD FOR SORTING A GROUP OF MAIL PIECES	LOCKHEED MARTIN CORPORATION	27/04/2007	DELHI
39	268284	3863/DELNP/2007	02/12/2005	03/12/2004	A TOOL FOR DOWNHOLE OPERATION AND METHOD OF USE THEREOF	HALLIBURTON ENERGY SERVICES, INC.	31/08/2007	DELHI

40	268286	6095/DELNP/2005	20/07/2004	24/07/2003	CIRCUIT BOARD WITH EMBEDDED COMPONENTS AND METHOD OF MANUFACTURE	MOTOROLA MOBILITY, INC.	22/01/2010	DELHI
41	268287	1805/DEL/2007	24/08/2007		NOVEL STEROIDAL ESTERS OF 17-OXIMINO-5-ANDROSTEN-3BETA-OL	COUNCIL OF SCIENTIFIC & INDUSTRIAL RESEARCH	24/04/2009	DELHI
42	268289	1652/DELNP/2007	03/08/2005	06/08/2004	PHTOSENSITIVE MEMBER CARTRIDGE, DEVELOPER CARTRIDGE AND PROCESS CARTRIDGE	BROTHER KOGYO KABUSHIKI KAISHA	24/08/2007	DELHI
43	268290	642/DEL/2003	30/04/2003	25/11/2002	SEALED CONTAINER	GARRY TSAUR	20/05/2005	DELHI
44	268293	5190/DELNP/2009	25/04/2008	26/04/2007	PROCESS FOR PRODUCTION OF TABLET	EISAI R&D MANAGEMENT CO., LTD.	19/03/2010	DELHI
45	268295	52/DELNP/2009	06/07/2007	06/07/2006	CEMENT-FREE REFRACTORY	VESUVIUS CRUCIBLE COMPANY	29/05/2009	DELHI
46	268297	3673/DELNP/2008	26/10/2006	08/11/2005	EMISSION SYSTEM AND METHOD FOR REDUCING NITROUS OXIDES IN LEAN-BURN DIESEL ENGINE EXHAUST	TENNECO AUTOMOTIVE OPERATING COMPANY .	15/08/2008	DELHI
47	268298	4208/DELNP/2008	20/11/2006	18/11/2005	AN APPARATUS FOR PERFORMING DETECTION AND DECODING IN A COMMUNICATION SYSTEM	QUALCOMM INCORPORATED	01/08/2008	DELHI
48	268300	2011/DELNP/2005	26/11/2003	04/12/2002	A TWO STAGE PROJECTION SYSTEM	THOMSON LICENSING S.A	09/10/2009	DELHI
49	268303	7597/DELNP/2009	16/07/2008	06/09/2007	CONTROLLED SURFACE GELLING OF MUCOADHESIVE POLYMERS ON ORAL MUCOSA	COLGATE-PALMOLIVE COMPANY	02/07/2010	DELHI
50	268304	2278/DELNP/2006	17/11/2004	17/11/2003	A SUBMERGED ENTRY NOZZLE FOR USE IN THE CONTINUOUS CASTING OF LIQUID METAL	VESUVIUS CRUCIBLE COMPANY	22/06/2007	DELHI
51	268305	1050/DELNP/2007	25/10/2005	02/11/2004	TOOTHBRUSH AND METHOD OF MAKING THE SAME	COLGATE-PALMOLIVE COMPANY	03/08/2007	DELHI
52	268306	305/DELNP/2008	15/11/2005	07/07/2005	POLISHING MACHINE	BUHLER AG.	27/06/2008	DELHI
53	268307	1211/DEL/2007	05/06/2007 16:55:47		TIGHT FIT, LEAK PROOF PRESSURE RELEASE END PLUG	DURA-LINE INDIA PVT.LTD.,	16/01/2009	DELHI
54	268311	7722/DELNP/2009	10/07/2009	18/07/2008	MASS- AND PROPERTY-TUNED VARIABLE MASS LABELING REAGENTS AND ANALYTICAL METHODS FOR SIMULTANEOUS PEPTIDE SEQUENCING AND MULTIPLEXED PROTEIN QUANTIFICATION USING THEREOF •	POSTECH ACADEMY-INDUSTRY FOUNDATION	02/07/2010	DELHI

55	268313	1275/DEL/2005	18/05/2005	03/06/2004	TURBINE BACKET WITH OPTIMIZED COOLING CIRCUIT	GENERAL ELECTRIC COMPANY	01/12/2006	DELHI
56	268314	1024/DEL/2006	20/04/2006 18:09:16		A PROCESS FOR THE SYNTHESIS OF 4-(1-ADAMANTYL)-2-SUBSTITUTED QUINOLINES EFFECTIVE FOR THE TREATMENT OF TUBERCULOSIS	NATIONAL INSTITUTE OF PHARMACEUTICAL EDUCATION AND RESEARCH	02/11/2007	DELHI
57	268316	1443/DEL/2005	03/06/2005		RADIOLABELED FORM OF DRUG COMPOSITION	DIRECTOR GENERAL, DEFENCE RESEARCH & DEVELOPMENT ORGANISATION	31/08/2007	DELHI
58	268317	2326/DEL/2007	07/11/2007 12:47:29	30/11/2006	PROCESS FOR THE PREPARATION OF SELF-EXTINGUISHING THERMOPLASTIC POLYURETHANES	BAYER MATERIALSCIENCE AG	06/06/2008	DELHI
59	268319	2781/DELNP/2010	10/10/2008	31/10/2007	HEAVY AROMATICS PROCESSING CATALYST AND PROCESS OF USING THE SAME	EXXONMOBIL CHEMICAL PATENTS INC,	28/10/2011	DELHI
60	268320	1379/DELNP/2009	30/08/2007	30/08/2007	PROCESS FOR PREPARING DIMETHYL ETHER	SK ENERGY CO., LTD.	12/06/2009	DELHI
61	268321	2152/DELNP/2007	06/09/2005	06/09/2004	A TRANSPORT PROTEIN	SYNTAXIN LIMITED	03/08/2007	DELHI
62	268323	3319/DELNP/2009	11/12/2007	28/12/2006	FLUIDIZED BED REACTOR WITH BACK-MIXING FOR DEHYDROGENATION OF LIGHT PARAFFINS	UOP LLC	16/04/2010	DELHI
63	268324	2325/DEL/2006	25/10/2006 13:18:26	02/11/2005	INTERNAL COMBUSTION ENGINE WITH SENSOR FOR DETECTING OPERATING CONDITIONS	HONDA MOTOR CO., LTD.	31/08/2007	DELHI
64	268325	5180/DELNP/2006	09/03/2005	11/03/2004	DISPENSING DEVICE	EPODPAK INTERNATIONAL INC.	13/04/2007	DELHI
65	268327	4925/DELNP/2005	12/04/2004	10/04/2003	VAPORIZED FUEL INJETION SYSTEM	ALEXANDER CHU	17/08/2007	DELHI
66	268328	374/DEL/2005	21/02/2005	05/07/2004	FE-BASED AMORPHOUS ALLOY RIBBON AND MAGNETIC CORE FORMED THEREBY	HITACHI METALS, LTD	19/06/2009	DELHI
67	268329	1690/DEL/2007	08/08/2007 16:35:58	28/08/2006	SURGICAL SYSTEM HAVING A CASSETTE WITH AN ACOUSTIC AIR REFLECTOR	ALCON, INC.	04/04/2008	DELHI
68	268333	206/DEL/2005	02/02/2005		A LIGHTWEIGHT STRUCTURAL COMPOSITE	THE DIRECTOR GENERAL, DEFENCE RESEARCH AND DEVELOPMENT ORGANIZATION	29/12/2006	DELHI

69	268334	1209/DEL/2004	30/06/2004	01/07/2003	METHOD AND TENSIONING DEVICE FOR STABILIZING AND REGULATING THE TENSION OF THREAD BEING UNWOUND FROM BOBBINS	SAVIO MACCHINE TESSILI S.P.A	23/06/2006	DELHI
70	268336	829/DEL/2004	05/05/2004	29/05/2003	A COMPUTER SYSTEM FOR DETECTING NETWORK- CONNECTED HARDWARE DEVICES	MICROSOFT CORPORATION	16/06/2006	DELHI
71	268337	1793/DELNP/2007	30/12/2003	31/12/2002	AN APPARATUS HAVING AN ATM MEDIA CASSETTE	DIEBOLD INCORPORATED	31/08/2007	DELHI
72	268338	1326/DEL/2004	19/07/2004		PROCESS FOR SYNTHESIZING MOLECULAR SIEVES	UOP LLC	30/06/2006	DELHI
73	268341	5223/DELNP/2007	11/07/2006	27/07/2005	NETWORK NODE UNIT	SIEMENS AKTIENGESELLSCHAFT	17/08/2007	DELHI
74	268343	2252/DEL/2006	13/10/2006	20/01/2006	FULLY ISOLATED INSULATION DEVICE AND ELECTRICAL WATER HEATER WITH THIS DEVICE	A.O. SMITH (CHINA) WATER HEATER CO., LTD.	07/09/2007	DELHI
75	268347	1050/DEL/2010	04/05/2010 12:10:55	07/05/2009	THICKENED AQUEOUS COMPOSITION	ROHM AND HAAS COMPANY	19/11/2010	DELHI
76	268348	1338/DEL/2004	20/07/2004	18/08/2003	SYSTEM AND METHOD FOR VALIDATING HIERARCHICALLY ORGANIZED MESSAGES	MICROSOFT TECHNOLOGY LICENSING, LLC	22/09/2006	DELHI
77	268349	7251/DELNP/2007	27/03/2006	28/03/2005	TITANIUM COMPOUNDS AND COMPLEXES AS ADDITIVES IN LUBRICANTS	THE LUBRIZOL CORPORATION	12/10/2007	DELHI
78	268350	8644/DELNP/2010	16/06/2009	23/06/2008	RISER TOP STRUCTURE FOR CIRCULATING FLUIDIZED BED GASIFICATION FURNACE	IHI CORPORATION	02/03/2012	DELHI
79	268353	768/DEL/2006	22/03/2006		A MULTI-POINT ANCHORING SYSTEM FOR GROUTED-TYPE BOREHOLE EXTENSOMETER FOR STRATA MOVEMENT MEASUREMENTS IN UNDERGROUND EXCAVATION	COUNCIL OF SCIENTIFIC & INDUSTRIAL RESEARCH	24/02/2012	DELHI
80	268355	2033/DELNP/2007	14/09/2005	17/09/2004	CONVEX SEALING BOTTOM FOR A TWIN-SHAFT TURBINE	NUOVO PIGNONE S.P.A	17/08/2007	DELHI
81	268361	2609/DELNP/2009	29/10/2007	30/10/2006	PROCESS AND APPARATUS FOR ALKYLATION OF AROMATIC COMPOUND WITH ALIPHATIC MONO-OLEFIN COMPOUND OF 8 TO 18 CARBON ATOMS	UOP LLC	19/06/2009	DELHI

82	268363	208/DEL/2008	25/01/2008 11:41:04		A PROCESS FOR SURFACE PRETREATMENT OF FERROUS SUBSTRATES FOR SOL-GEL CERAMIC COATING	COUNCIL OF SCIENTIFIC & INDUSTRIAL RESEARCH	23/04/2010	DELHI
83	268364	1794/DELNP/2008	23/08/2006	25/08/2005	CANINE INFLUENZA VACCINES	MERIAL LIMITED	25/07/2008	DELHI
84	268367	9523/DELNP/2007	09/06/2006	10/06/2005	RAPID BINDER COMPOSITIONS CONTAINING A CALCIUM SALT FOR CONCRETE COMPONENTS AND STRUCTURES	LAFARGE,CHRYSO	27/06/2008	DELHI
85	268370	5606/DELNP/2008	03/01/2007	04/01/2006	OLIGOPEPTIDE-FREE CELL CULTURE MEDIA	BAXTER INTERNATIONAL INC.,,BAXTER HEALTHCARE S.A.	26/09/2008	DELHI
86	268374	620/DEL/2009	27/03/2009 12:59:50		A PROCESS OF MAKING POROUS BIOACTIVE SCAFFOLDS, POROUS BONE FILLER MATERIALS, NANO SIZED CALCIUM HYDROXYI APATITE POWDER OR A COMPOSITE WITH OTHER CALCIUM PHOSPHATES	COUNCIL OF SCIENTIFIC & INDUSTRIAL RESEARCH	14/01/2011	DELHI
87	268378	983/DEL/2003	11/08/2003		A DEVICE, FOR GUIDING OF LOQUID LIQUID, IN A COLUMN	SULZER CHEMTECH AG	27/05/2005	DELHI

Publication Under Section 43(2) in Respect of the Grant

Following Patents have been granted and any person interested in opposing these patents under Section 25(2) may at any time within one year from the date of this issue, give notice to the Controller of Patents at the appropriate office, on the prescribed form-7 along with written statement and evidence, if any.

Serial Number	Patent Number	Application Number	Date of Application	Date of Priority	Title of Invention	Name of Patentee	Date of Publication of Abstract u/s 11(A)	Appropriate Office
1	268209	260/MUMNP/2009	17/08/2007	18/08/2006	A MOLTEN METAL CASTING SYSTEM	WAGSTAFF INC	15/05/2009	MUMBAI
2	268210	657/MUMNP/2010	09/10/2008	11/10/2007	PYRROLO [2,3-D] PYRIMIDIN DERIVATIVES AS PROTEIN KINASE B INHIBITORS	ASTRAZENECA AB	22/10/2010	MUMBAI
3	268215	1199/MUM/2009	07/05/2009 12:23:07		OXYGEN SCAVENGING POLYESTER COMPOSITION	RELIANCE INDUSTRIES LIMITED	19/11/2010	MUMBAI
4	268216	762/MUM/2011	17/05/2011		CONTROLLED MORPHOLOGY HIGH ACTIVITY POLYOLEFIN CATALYST SYSTEM	RELIANCE INDUSTRIES LTD.	01/02/2013	MUMBAI
5	268221	450/MUM/2007	09/03/2007		METHOD FOR QUANTIFICATION OF RABIES GLYCOPROTEIN ANTIGEN IN AN IN-PROCESS RABIES VACCINE SAMPLE DURING MANUFACTURING OF RABIES VACCINE	SERUM INSTITUTE OF INDIA LTD.	28/11/2008	MUMBAI
6	268222	110/MUM/2007	18/01/2007		METHOD OF ENHANCING IMMUNE RESPONSE OF A 7-VALENT POLYSACCHARIDE VACCINE	SERUM INSTITUTE OF INDIA LTD.	19/09/2008	MUMBAI
7	268243	1507/MUMNP/2008	19/01/2007	21/01/2006	SYSTEM AND METHOD FOR GENERATING INTERACTIVE VIDEO IMAGES	TENCENT TECHNOLOGY (SHENZHEN) COMPANY LIMITED	10/10/2008	MUMBAI
8	268245	1075/MUM/2004	08/10/2004		A HYBRID TRANSMISSION SYSTEM	INDIAN INSTITUTE OF TECHNOLOGY BOMBAY	23/02/2007	MUMBAI
9	268249	1966/MUM/2008	16/09/2008		FLUIDIZED BED SUGAR DRIER	KILBURN ENGINEERING LIMITED	15/05/2009	MUMBAI
10	268255	988/MUM/2006	23/06/2006		PROCESS FOR MAKING A FILTER AND FILTER OBTAINED THEREFROM	HINDUSTAN UNILEVER LIMITED	04/07/2008	MUMBAI

11	268272	332/MUM/2008	15/02/2008 12:22:17	23/02/2008	COMPOSING INTEGRATED SYSTEMS USING GUI-BASED APPLICATIONS AND WEB SERVICES	ACCENTURE GLOBAL SERVICES LIMITED	04/09/2009	MUMBAI
12	268276	1641/MUM/2007	27/08/2007		BONE PLATE ASSEMBLIES	ADLER MEDIEQUIP PRIVATE LIMITED	12/06/2009	MUMBAI
13	268278	465/MUMNP/2008	14/08/2006	12/08/2005	CYCLIC NITRO COMPOUNDS, PHARMACEUTICAL COMPOSITIONS THEREOF	RADIORX, INC; C/O INTERWEST VENTURE PARTNERS,RADIORX, INC.	04/04/2008	MUMBAI
14	268288	567/MUM/2008	19/03/2008		A TEST SETUP FOR TESTING CHAMBER MOUNTING BRACKET OF AN AIR BRAKE SYSTEM AND METHOD OF TESTING THEREOF	TATA MOTORS LIMITED	23/05/2008	MUMBAI
15	268302	2394/MUMNP/2008	29/05/2007	01/06/2006	METHOD AND APPARATUS FOR A DUMMY SRAM CELL	QUALCOMM INCORPORATED	26/06/2009	MUMBAI
16	268315	380/MUMNP/2007	18/08/2005	18/08/2004	METHOD AND SYSTEM FOR AUTHORIZING A TRANSACTION USING A DYNAMIC AUTHORIZATION CODE	MASTERCARD INTERNATIONAL INCORPORATED	20/07/2007	MUMBAI
17	268318	389/MUMNP/2004	18/05/1999	18/05/1998	AN APPARATUS FOR PURGING POLYMER SOLIDS	EXXONMOBIL CHEMICAL PATENTS INC.	29/04/2005	MUMBAI
18	268322	163/MUMNP/2009	26/06/2006	26/06/2006	SYSTEM DETERMINATION EMULATOR FOR ANALYSIS AND TESTING	QUALCOMM INCORPORATED	15/05/2009	MUMBAI
19	268335	335/MUM/2008	15/02/2008 14:31:43		A STEERING COLUMN SUPPORT STRUCTURE FOR VEHICLE	TATA MOTORS LIMITED	04/04/2008	MUMBAI
20	268340	344/MUM/2007	20/02/2007		A COMPOSITION FOR PREMIX CONCENTRATE SPECIALLY DESIGNED FOR CAKE AND CAKE RELATED PRODUCTS	ADVANCED ENZYME TECHNOLOGIES LIMITED	24/10/2008	MUMBAI
21	268365	1875/MUMNP/2007	09/05/2006	10/05/2005	SECURE BACKUP SYSTEM AND METHOD IN A MOBILE TELECOMMUNICATION NETWORK	GIESECKE & DEVRIENT GMBH	14/12/2007	MUMBAI
22	268369	372/MUMNP/2010	29/08/2008	31/08/2007	METHOD FOR PRODUCING 1, 2-PROPANDIOL BY LOW-PRESSURE HYDROGENATION OF GLYCERINE •	BASF SE	06/08/2010	MUMBAI

Publication Under Section 43(2) in Respect of the Grant

Following Patents have been granted and any person interested in opposing these patents under Section 25(2) may at any time within one year from the date of this issue, give notice to the Controller of Patents at the appropriate office, on the prescribed form-7 along with written statement and evidence, if any.

Serial Number	Patent Number	Application Number	Date of Application	Date of Priority	Title of Invention	Name of Patentee	Date of Publication of Abstract u/s 11(A)	Appropriate Office
1	268202	501/CHE/2009	05/03/2009 16:58:47	06/03/2008	SEALING JIG AND PLATING TREATMENT APPARATUS	SUZUKI MOTOR CORPORATION	11/09/2009	CHENNAI
2	268211	3842/CHENP/2006	15/03/2005	26/03/2004	A DISPLAY DEVICE COMPRISING AN ADJUSTABLE LIGHT SOURCE	KONINKLIJKE PHILIPS ELECTRONICS N.V.	15/06/2007	CHENNAI
3	268213	2491/CHENP/2009	15/10/2007	13/10/2006	CONNECTOR FOR SINGLE AND DOUBLE BREAST PUMPING	MEDELA HOLDING AG	02/04/2010	CHENNAI
4	268214	2653/CHENP/2008	28/11/2006	28/11/2005	NON-AQUEOUS PIGMENT DISPERSION	AGFA GRAPHICS NV	06/03/2009	CHENNAI
5	268217	3808/CHENP/2007	31/01/2006	01/02/2005	A METHOD OF IDENTIFYING NETWORK PATHS IN A COMPUTER NETWORK	CISCO TECHNOLOGY, INC.	21/12/2007	CHENNAI
6	268218	6317/CHENP/2009	07/11/2008	13/11/2007	COMPOSITION FOR IMPROVING THE SUGAR CONTENT IN PLANTS AND USE THEREOF	JAPAN SCIENCE AND TECHNOLOGY AGENCY	15/01/2010	CHENNAI
7	268223	6398/CHENP/2008	23/05/2007	23/05/2006	DEVELOPER SUPPLY CONTAINER AND DEVELOPER SUPPLYING SYSTEM	CANON KABUSHIKI KAISHA	27/03/2009	CHENNAI
8	268224	448/CHE/2005	18/04/2005		A METHOD OF NETWORK PRINTING USING SUBNET ADDRESS BY A MULTI FUNCTIONAL PERIPHERAL	SAMSUNG R& D INSTITUTE INDIA BANGALORE PRIVATE LIMITED	27/07/2007	CHENNAI
9	268226	3237/CHENP/2007	21/12/2005	22/12/2004	DEVICE FOR GENERATING STEAM	KONINKLIJKE PHILIPS ELECTRONICS N.V	16/11/2007	CHENNAI
10	268228	2825/CHENP/2007	27/12/2004	27/12/2004	AN ELECTRICAL INDUCTION DEVICE FOR HIGH-VOLTAGE APPLICATIONS	ABB TECHNOLOGY AG	07/09/2007	CHENNAI
11	268230	3324/CHENP/2007	05/12/2005	29/12/2004	HIGH SPEED FREQUENCY AND PHASE ESTIMATION FOR FLOW METERS	MICRO MOTION, INC.	09/11/2007	CHENNAI

12	268231	594/CHE/2006	31/03/2006		MODIFIED KEYPAD TO OPTIMIZE THE TYPING SPEED IN WIRELESS TERMINALS	SAMSUNG R& D INSTITUTE INDIA BANGALORE PRIVATE LIMITED	23/11/2007	CHENNAI
13	268250	1127/CHENP/2007	08/09/2005	16/09/2004	TURBOMACHINE BLADE	ALSTOM TECHNOLOGY LTD	17/08/2007	CHENNAI
14	268251	1465/CHE/2004	31/12/2004		METHOD FOR CUSTOMIZATION OF RING TONES AND DISPLAY PROFILE OF A CALLING PARTY	SAMSUNG R& D INSTITUTE INDIA BANGALORE PRIVATE LIMITED	20/04/2007	CHENNAI
15	268256	1361/CHENP/2008	20/09/2006	20/09/2005	POLYESTER RESIN FOR TONER, METHOD FOR PRODUCING SAME, AND TONER	MITSUBISHI RAYON CO., LTD.	28/11/2008	CHENNAI
16	268258	611/CHENP/2007	12/07/2005	12/07/2004	LIFT AND PULLEY ARRANGEMENT FOR USE IN A LIFT	INVENTIO AG	24/08/2007	CHENNAI
17	268260	717/CHENP/2008	11/08/2006	11/08/2005	COATED ARTICLE COMPRISING METAL SUBSTRATE WITH INTERPENETRATING POLYMER NETWORK AS COATING	3M INNOVATIVE PROPERTIES COMPANY	28/11/2008	CHENNAI
18	268262	1406/CHENP/2007	05/10/2005	07/10/2004	METHOD OF COATING A HEAT EXCHANGER	BEHR GmbH & Co. KG	31/08/2007	CHENNAI
19	268266	892/CHENP/2009	17/07/2007	20/07/2006	INTAKE APPARATUS FOR INTERNAL COMBUSTION ENGINE	AISIN SEIKI KABUSHIKI KAISHA	29/05/2009	CHENNAI
20	268267	1270/CHENP/2007	27/09/2005	08/10/2004	METHOD FOR DETERMINING THE CURRENT ZERO-CROSSING IN A CONVERTER	ABB RESEARCH LTD.	31/08/2007	CHENNAI
21	268270	2969/CHE/2008	27/11/2008 16:28:47		IMPROVED PROCESS FOR THE PREPARATION OF DORZOLAMIDE HYDROCHLORIDE AND PREPARATION OF ITS NOVEL INTERMEDIATE	SUVEN LIFE SCIENCES LIMITED	11/06/2010	CHENNAI
22	268271	5872/CHENP/2009	05/03/2008	07/03/2007	EXHAUST GAS TREATING METHOD	CHIYODA CORPORATION	19/02/2010	CHENNAI
23	268280	2003/CHENP/2009	25/10/2007	27/10/2006	POWER ALLOCATION SCHEME	QUALCOMM INCORPORATED	29/06/2012	CHENNAI
24	268282	2763/CHE/2007	26/11/2007		FAX STATUS DISPLAY ON LIQUID CRYSTAL DISPLAY (LCD) OF AN MULTI FUNCTIONAL PRINTER (MFP)	SAMSUNG R& D INSTITUTE INDIA - BANGALORE PRIVATE LIMITED	08/11/2013	CHENNAI

25	268296	2369/CHENP/2008	03/11/2006	14/11/2005	METHOD OF MOLDING RIGID POLYURETHANE FOAMS WITH ENHANCED THERMAL CONDUCTIVITY	DOW GLOBAL TECHNOLOGIES LLC	06/03/2009	CHENNAI
26	268301	451/CHENP/2008	27/07/2006	28/07/2005	COLD-SHRINK ARTICLE AND METHOD OF MAKING COLD-SHRINK ARTICLE	3M INNOVATIVE PROPERTIES COMPANY	19/09/2008	CHENNAI
27	268308	6001/CHENP/2007	13/06/2006	28/06/2005	A REFORMING REACTOR FOR THE CONVERSION OF A PROCESS FLUID INTO HYDROGEN	HALDOR TOPSOE A/S	27/06/2008	CHENNAI
28	268310	6005/CHENP/2007	13/06/2006	28/06/2005	COMPACT REFORMING REACTOR	HALDOR TOPSOE A/S	27/06/2008	CHENNAI
29	268312	5308/CHENP/2007	20/04/2006	22/04/2005	INNOVATIVE FORMULATION	ENDURA S.P.A	27/06/2008	CHENNAI
30	268339	3139/CHENP/2008	19/12/2006	21/12/2005	PREPARATION OF BROMINATED STYRENIC POLYMERS OR RESINS	ALBEMARLE CORPORATION	06/03/2009	CHENNAI
31	268342	1441/CHE/2007	04/07/2007		A BALANCER SYSTEM FOR A TWO WHEELER MOTOR VEHICLE	TVS MOTOR COMPANY LIMITED	09/01/2009	CHENNAI
32	268362	373/CHENP/2009	26/11/2004	27/11/2003	EPOXY COMPOUND, TRIAZOLE COMPOUND AND PROCESS FOR PRODUCING THEREOF	SUMITOMO CHEMICAL COMPANY, LIMITED	05/06/2009	CHENNAI
33	268366	1559/CHENP/2007	06/10/2005	07/10/2004	SURFACE-TREATING AGENT, SURFACE-TREATED POWDER, AND COSMETIC PREPARATION CONTAINING SAME	SHISEIDO CO., LTD	31/08/2007	CHENNAI
34	268368	651/CHENP/2009	05/07/2007	06/07/2006	DISPERSIONS OF OLEFIN BLOCK COPOLYMERS	DOW GLOBAL TECHNOLOGIES LLC	05/06/2009	CHENNAI
35	268372	1462/CHE/2005	12/10/2005		CRYSTALLINE CEFTIOFUR SODIUM AND PROCESS FOR ITS PREPARATION	ORCHID CHEMICALS & PHARMACEUTICALS LTD	12/10/2007	CHENNAI
36	268375	3749/CHENP/2007	03/02/2006	28/02/2005	COMPOSITE POLYMER FIBERS	3M INNOVATIVE PROPERTIES COMPANY	23/11/2007	CHENNAI
37	268376	2663/CHENP/2008	30/10/2006	28/10/2005	A PHOTOMEDICAL SYSTEM WITH A VIRTUAL ALIGNMENT ELEMENT	TOPCON MEDICAL LASER SYSTEMS INC.	06/03/2009	CHENNAI
38	268377	2572/CHENP/2007	12/12/2005	15/12/2005	AEROGEL CONTAINING BLANKET	CABOT CORPORATION	07/09/2007	CHENNAI

Publication Under Section 43(2) in Respect of the Grant

Following Patents have been granted and any person interested in opposing these patents under Section 25(2) may at any time within one year from the date of this issue, give notice to the Controller of Patents at the appropriate office, on the prescribed form-7 along with written statement and evidence, if any.

Serial Number	Patent Number	Application Number	Date of Application	Date of Priority	Title of Invention	Name of Patentee	Date of Publication of Abstract u/s 11(A)	Appropriate Office
1	268199	363/KOLNP/2009	16/08/2007	16/08/2006	A METHOD OF CONTROLLING UPLINK OUTPUT POWER IN A WIRELESS COMMUNICATION SYSTEM	LG ELECTRONICS INC.	08/05/2009	KOLKATA
2	268200	371/CAL/2001	06/07/2001		A METHOD FOR ERROR PROTECTED TRANSMISSION OF DATA BEING CAPABLE OF TRANSMITTING DATA ITEMS	SONY CORPORATION	20/11/2009	KOLKATA
3	268201	372/CAL/2001	06/07/2001		A RECEIVING SECTION FOR RECEPTION OF ERROR PROTECTED DATA	SONYCORPORATION	20/11/2009	KOLKATA
4	268204	67/KOL/2009	13/01/2009	15/01/2008	A METHOD FOR FILLING A FUEL CELL ANODE SUPPLY MANIFOLD WITH HYDROGEN GAS DURING START-UP	GM GLOBAL TECHNOLOGY OPERATIONS, INC.	31/07/2009	KOLKATA
5	268227	3197/KOLNP/2008	05/02/2007	08/02/2006	TRANSMISSION DEVICE AND TRANSMISSION METHOD	NTT DOCOMO, INC.	13/02/2009	KOLKATA
6	268232	1338/KOLNP/2008	12/10/2006	14/10/2005	SYSTEMS AND METHODS FOR DETECTING FLUIDS	JOHNSON & JOHNSON VISION CARE, INC.	26/12/2008	KOLKATA
7	268233	117/KOLNP/2008	26/06/2006	28/06/2005	METHOD AND APPARATUS FOR SENSING LIQUID LEVEL USING BASELINE CHARACTERISTIC	KEURIG, INCORPORATED	05/12/2008	KOLKATA
8	268234	772/KOL/2008	25/04/2008 15:52:11		A NOVEL RADIALLY VENTED INTERRUPTER FOR GAS CIRCUIT BREAKER APPLICATION	BHARAT HEAVY ELECTRICALS LIMITED	30/10/2009	KOLKATA
9	268252	3463/KOLNP/2006	25/04/2005	26/04/2004	METHODS FOR INCREASING THE USEFUL LIFETIME OF AN OPTICAL SENSOR.	SENSORS FOR MEDICINE AND SCIENCE,INC.	15/06/2007	KOLKATA
10	268254	2090/KOLNP/2009	17/03/2008	16/03/2007	METHOD OF MONITORING CONTROL CHANNEL IN WIRELESS COMMUNICATION SYSTEM	LG ELECTRONICS INC.	26/06/2009	KOLKATA

11	268265	4597/KOLNP/2008	13/04/2007	13/04/2006	CHROMIUM-BASED CATALYSTS	TOTAL PETROCHEMICALS RESEARCH FELUY	13/03/2009	KOLKATA
12	268277	2022/KOLNP/2009	16/12/2007	17/12/2006	PROCESS FOR THE PREPARATION OF SUBSTITUTED CYANOPHENOZY-PYRIMIDINYLOXY-PHENYL ACRYLATE DERIVATIVES	MAKHTESHIM CHEMICAL WORKS LTD.	19/06/2009	KOLKATA
13	268285	3116/KOLNP/2009	18/06/2008	19/06/2007	LOUDNESS MEASUREMENT WITH SPECTRAL MODIFICATIONS	DOLBY LABORATORIES LICENSING CORPORATION	09/07/2010	KOLKATA
14	268291	65/KOLNP/2005	22/01/2002	22/01/2001	A PROCESS FOR THE PREPARATION OF A COMPOUND	NIPPON SODA CO. LTD. ,NISSO FINE CO. LTD.	03/02/2006	KOLKATA
15	268292	1636/KOLNP/2006	24/12/2004	30/12/2003	IONIC LIQUID-MODIFIED CATHODE AND ELECTROCHEMICAL DEVICE USING THE SAME	LG CHEM, LTD	11/05/2007	KOLKATA
16	268294	4395/KOLNP/2009	11/06/2008	11/06/2007	CLOSED-CELL FOAMED RUBBER SHEET, AND METHOD FOR PRODUCTION THEREOF	SEKISUI CHEMICAL CO., LTD.	23/04/2010	KOLKATA
17	268299	232/KOLNP/2010	31/07/2008	13/08/2007	A CATALYST FOR THE PRODUCTION OF CARBOXYLIC ACID ESTERS	ASAHI KASEI CHEMICAL CORPORATION	13/08/2010	KOLKATA
18	268309	1842/KOL/2008	27/10/2008	02/11/2007	A TORQUE CONTROL SYSTEM AND A METHOD OF OPERATING A TORQUE CONTROL SYSTEM	GM GLOBAL TECHNOLOGY OPERATIONS, INC.	05/06/2009	KOLKATA
19	268326	1351/KOLNP/2010	23/10/2008	26/10/2007	SUPPORTED COMPOSITE PARTICLE MATERIAL, PRODUCTION PROCESS O SAME AND PROCESS FOR PRODUCING COMPOUNDS USING SUPPORTED COMPOSITE PARTICLE MATERIAL AS CATALYST FOR CHEMICAL SYNTHESIS	ASAHI KASEI CHEMICALS CORPORATION	09/07/2010	KOLKATA
20	268330	1224/KOLNP/2008	08/09/2006	13/09/2005	LEVER MECHANISM IN PARTICULAR FOR A WEIGHING SENSOR OF A BALANCE WORKING ON THE PRINCIPLE OF ELECTROMAGNETIC FORCE COMPENSATION	WIPOTEC WIEGE-UND POSITIONIERSYSTEME GMBH	26/12/2008	KOLKATA
21	268331	3140/KOLNP/2007	13/03/2006	14/03/2005	TIGECYCLINE COMPOSITIONS AND METHODS OF PREPARATION	WYETH LLC	28/12/2007	KOLKATA

22	268332	1260/KOL/2006	22/11/2006		AN AUTOMATIC SYSTEM FOR MEASUREMENT OF LENGTH OF MOVING PRODUCT	STEEL AUTHORITY OF INDIA LIMITED	11/07/2008	KOLKATA
23	268344	3858/KOLNP/2007	18/04/2006	18/04/2005	FUSE ARRANGEMENT	ABB TECHNOLOGY AG	20/06/2008	KOLKATA
24	268345	3057/KOLNP/2008	27/01/2007	08/02/2006	METHOD AND APPARATUS FOR A SYNCHRONIZATION CHANNEL IN AN OFDMA SYSTEM	MOTOROLA MOBILITY, INC.	06/02/2009	KOLKATA
25	268346	2204/KOLNP/2009	14/01/2008	16/01/2007	INSULATING BODY FOR A BUSBAR COUPLING, AND BUSBAR COUPLING	SIEMENS AKTIENGESELLSCHAFT	03/07/2009	KOLKATA
26	268351	924/KOL/2008	22/05/2008	24/05/2007	HEAT-RESISTANT ALUMINIUM ALLOY	ALUMINIUM RHEINFELDEN GMBH	24/04/2009	KOLKATA
27	268352	948/KOL/2007	02/07/2007		AN IMPROVED INSTERSTITIAL FREE STEEL GRADE FOR HIGH STRENGTH HAVING 340-440 MPa UTS AND THE PROCESS THEREOF	TATA STEEL LIMITED	03/04/2009	KOLKATA
28	268354	2013/KOLNP/2008	30/10/2006	21/11/2005	TURBINE BLADE FOR A STEAM TURBINE	SIEMENS AKTIENGESELLSCHAFT	16/01/2009	KOLKATA
29	268356	145/KOL/2006	17/02/2006		METHOD OF PREPARING A COAL CHARGE BLEND WITH DESIRED HOMOGENEITY FOR CARBONIZATION	STEEL AUTHORITY OF INDIA LIMITED	24/08/2007	KOLKATA
30	268357	1668/KOLNP/2008	17/10/2006	17/10/2005	SYSTEM AND METHOD FOR MOUNTING A PLATE TO AN ADHESIVE MEMBER	GERALD AND TERESA ANN GARTNER, OR THEIR SUCCESSOR, AS TRUSTEES OF THE GERALD J. GARTNER REVOCABLE TRUST U/D/T	26/12/2008	KOLKATA
31	268358	1415/KOLNP/2007	22/09/2005	20/10/2004	EXTRUDER	BLACH VERWALTUNGS GMBH & CO, KG	20/07/2007	KOLKATA
32	268359	859/KOL/2008	08/05/2008		METHOD OF FRICTION WELDING PROCEDURE FOR FERRITIC STAINLESS STEEL RODS	BHARAT HEAVY ELECTRICALS LIMITED	13/11/2009	KOLKATA
33	268360	4034/KOLNP/2008	26/02/2007	03/03/2006	SUBSTITUTED ARYLSULFONAMIDES AS ANTIVIRAL AGENTS	AICURIS GMBH & CO. KG.	27/02/2009	KOLKATA
34	268371	636/KOLNP/2008	24/08/2006	24/08/2005	METHOD AND DEVICE FOR THE INTERNAL PLASMA TREATMENT OF HOLLOW BODIES	SCHOTT AG	27/03/2009	KOLKATA
35	268373	1305/KOL/2007	19/09/2007 16:25:46	29/09/2006	MULTIMEDIA SERVER WITH CHANNEL CONTROL MODULE AND METHODS FOR USE THEREWITH	VIXS SYSTEMS INC	16/05/2008	KOLKATA

CONTINUED TO PART- 2

CONTINUED FROM PART- 1

INTRODUCTION

In view of the recent amendment made in the Designs (Amendment) Rules, 2008 with effect from 17/06/2008, Publication of the matter relating to Designs is being published in the Official Journal of The Patent Office. This Journal is being published on weekly basis on every Friday covering the various proceedings on Designs as required according to the provisions of under Rule 22, 25, 27 and 39 of the Design (Amendment) Rules, 2008. All the enquiries on this Official Journal and other information as required by the public should be addressed to the Controller General of Patents, Designs & Trade Marks. Suggestions and comments are requested from all quarters so that the content can be enriched.

THE DESIGNS ACT 2000
(SECTION 30)
DESIGN ASSIGNMENT

The Design stands in the name of NOKIA CORPORATION registered under the Designs Act, 2000 has been assigned in the Register of Designs in the name as follows:-

Design No.	Class	Name
240584	**14-03**	MICROSOFT MOBILE OY, A CORPORATION ORGANIZED UNDER THE LAWS OF FINLAND, OF KEILALAHDENTIE 2-4, 02150 ESPOO, FINLAND

THE DESIGNS ACT 2000
(SECTION 30)
DESIGN ASSIGNMENT

The Design stands in the name of **ABB AB** registered under the Designs Act, 2000 has been assigned in the Register of Designs in the name as follows:-

Design No.	Class	Name
264579	**14-03**	ABB TECHNOLOGY LTD. OF AFFOLTERNSTRASSE 44, CH-8050 ZURICH, SWITZERLAND, A SWISS COMPANY

THE DESIGNS ACT 2000
(SECTION 30)
DESIGN ASSIGNMENT

The Design stands in the name of LPG WORLD S.A.M. registered under the Designs Act, 2000 has been assigned in the Register of Designs in the name as follows:-

Design No.	Class	Name
197129	**09-03**	LPG SYSTEMS, 30 RUE DU DOCTEUR ABEL, 26000 VALENCE, FRANCE

THE DESIGNS ACT 2000
(SECTION 30)
DESIGN ASSIGNMENT

The Design stands in the name of LAKSHMI NIWAS AGRAWAL registered under the Designs Act, 2000 has been assigned in the Register of Designs in the name as follows:-

Design No.	Class	Name
197131	**12-16**	BHARAT KUMAR AGRAWAL, S/O SHRI LAKSHMI NIWAS AGRAWAL AND SANJAY KUMAR AGRAWAL, S/O SHRI LAKSHMI NIWAS AGRAWAL, INDIAN NATIONALS, HAVING ITS ADDRESS AT LAKHY COLD STORAGE COMPOUND, HOUSE NO. 428/29/30, SHEODASPUR, LAHARTARA, VARANASI-221002, INDIA

List of petitions for cancellation of registered design under Section 19 of the Designs Act, 2000 since January, 2007

Sl. No.	Registered Design No.	Date of Filing	Applicants	Regd. Proprietor	Class
1.	188550	10/1/2007	M/s. Jindal Polybuttons Ltd	Metropolitan Trading Co	02-07
2.	202344	19/1/2007	M/s. Srmb Udyog Ltd.	Atibir Hi-Tech (Pvt.) Ltd.	25-99
3.	202483	5/2/2007	Add Corporation Limited	Pilot Corporation & Luxor Writing Instruments Pvt. Ltd	19-06
4.	203935	7/2/2007	Sanjay Sen	Meghna Group	05-05
5.	203936	7/2/2007	Sanjay Sen	Meghna Group	05-05
6.	182372	12/2/2007	S.K.Banka & Others	Artiben Subhashbhai Panchal	3
7.	193033	12/2/2007	Artiben Subhashbhai Panchal	S.K.Banka & Others	08-07
8.	195527	13/2/2007	M/s. Mead West Vaco Calmar (Usa) & M/s. Speciality Valves (Prop.Lion Holdings Pvt. Ltd.)	National Plastics	09-07
9.	204030	13/2/2007	M/s. Luso Iberia S.A.	Sarathi Perfumery Works	09-03
10.	204030	2/3/2007	M/s. Mahendra Perfumery Works	Sarathi Perfumery Works	09-03
11.	171486	5/4/2007	Naveen Kumar Jain	M/s. Dabur India Limited	3
12.	173234	5/4/2007	Naveen Kumar Jain	M/s. Dabur India Limited	3
13.	173234	5/4/2007	Amit Kumar Jain	M/s. Dabur India Limited	3
14.	193988	16/4/2007	Wyeth Limited	Reckitt Benckiser India Limited	99-00
15.	200763	16/4/2007	Shri Parvesh Kumar Bajaj	Wipro Limited	26-05
16.	191893	8/5/2007	Kalpana Sharma	Jyoti Jiten Bhatt	24-99
17.	191896	8/5/2007	Kalpana Sharma	Jyoti Jiten Bhatt	24-99
18.	191906	8/5/2007	Kalpana Sharma	Jyoti Jiten Bhatt	24-99
19.	201728	11/5/2007	M/s. Lucky Exports	International Cycle Gears	12-11
20.	183202	14/5/2007	M/s. Crag Martin Distillery Private Limited	Herbertsons Limited	4
21.	191096	20/6/2007	M/s. Arjan Impex Pvt. Ltd	Avanti Overseas Pvt. Ltd	07-02
22.	194882	20/6/2007	M/s. Arjan Impex Pvt. Ltd	Avanti Overseas Pvt. Ltd	07-01
23.	177653	25/6/2007	Shri Subodh S. Somani	Declan Kelly	5
24.	177654	25/6/2007	Shri Subodh S. Somani	Declan Kelly	5
25.	177655	25/6/2007	Shri Subodh S. Somani	Declan Kelly	5
26.	177656	25/6/2007	Shri Subodh S. Somani	Declan Kelly	5
27.	177657	25/6/2007	Shri Subodh S. Somani	Declan Kelly	5
28.	193716	4/7/2007	M/s. Orchid Hardware Pvt. Ltd.	Kich Marketing (P) Ltd.	08-06
29.	193720	4/7/2007	M/s. Orchid Hardware Pvt. Ltd.	Kich Marketing (P) Ltd.	08-06
30.	193753	4/7/2007	M/s. Orchid Hardware Pvt. Ltd.	Kich Marketing (P) Ltd.	08-06
31.	201407	4/7/2007	M/s. Orchid Hardware Pvt. Ltd.	Kich Marketing (P) Ltd.	08-06
32.	201410	4/7/2007	M/s. Orchid Hardware Pvt. Ltd.	Kich Marketing (P) Ltd.	08-06

33.	201412	4/7/2007	M/s. Orchid Hardware Pvt. Ltd.	Kich Marketing (P) Ltd.	08-06
34.	201417	4/7/2007	M/s. Orchid Hardware Pvt. Ltd.	Kich Marketing (P) Ltd.	08-06
35.	202050	9/7/2007	M/s. Vikas Engineers	Mourya Industries	06-07
36.	202051	9/7/2007	M/s. Vikas Engineers	Mourya Industries	06-07
37.	198596	20/7/2007	Balaji Telebrands Limited	Ramakant Rajaram Gaikwad	99-00
38.	198597	20/7/2007	Balaji Telebrands Limited	Ramakant Rajaram Gaikwad	99-00
39.	198598	20/7/2007	Balaji Telebrands Limited	Ramakant Rajaram Gaikwad	99-00
40.	182534	24/7/2007	Mrs. Navita Jain	Taneja Mines Private Limited	3
41.	185209	24/7/2007	Mrs. Navita Jain	Taneja Mines Private Limited	09-99
42.	189629	24/7/2007	Mrs. Navita Jain	Taneja Mines Private Limited	06-07
43.	190284	24/7/2007	Mrs. Navita Jain	Taneja Mines Private Limited	06-07
44.	190286	24/7/2007	Mrs. Navita Jain	Taneja Mines Private Limited	06-07
45.	203391	25/7/2007	Balbir Singh	Panesar Machine Tools	15-99
46.	199894	17/8/2007	M/s. Jai Kisan Insecticide	Bayer Aktiengesellschaft	09-01
47.	206890	6/9/2007	Shri Balaji International (India)	Jugmug Shoes	02-04
48.	190924	18/9/07	M/s. Okay Confectionary	M/s. S.K. Industries (P) Ltd	07-01
49.	200427	20/9/07	M/s. Super Engineering Works	Kent R-O Systems	23-01
50.	198530	20/9/07	M/s. Super Engineering Works	Kent R-O Systems	23-01
51.	205864	25/9/07	Declan Kelly	J & J Buildcon Pvt. Ltd.	20-03
52.	207629	18/9/07	M/s. Kent Ro Systems Ltd.	Of Super Engineering Works	23-01
53.	202108	27/9/07	M/s. Lucky Exports	International Cycle Gears	12-11
54.	205863	18/10/07	Declan Kelly	J & J Buildcon Pvt. Ltd.	20-03
55.	205859	23/10/2007	Declan Kelly	J & J Buildcon Pvt. Ltd.	20-03
56.	205860	23/10/2007	Declan Kelly	J & J Buildcon Pvt. Ltd.	20-03
57.	205861	23/10/2007	Declan Kelly	J & J Buildcon Pvt. Ltd.	20-03
58.	205862	23/10/2007	Declan Kelly	J & J Buildcon Pvt. Ltd.	20-03
59.	207681	5/11/2007	M/s. Shivco Prints	Kankariya Syntex Pvt. Ltd	05-05
60.	207681	13/11/2007	M/s. Shri Jain Agences	Kankariya Syntex Pvt. Ltd	05-05
61.	207681	13/11/2007	M/s. Rangrej Process Pvt. Ltd.	Kankariya Syntex Pvt. Ltd	05-05
62.	204795	20/11/07	M/s. Avanti Overseas Pvt. Ltd.	M/s. Arjan Impex Pvt. Ltd	30-03
63.	202532	20/11/07	M/S.Maysons Industries	Stavley Machine & Tools Company	15-03
64.	206898	22/11/2007	Dabur India Limited	Amit Jain	09-01
65.	207681	14/12/2007	M/S.Aditi Textile Agency	Kankariya Syntex Pvt. Ltd	05-05
66.	186992	18/12/2007	Pro Laboratories (P) Ltd.	Troikka Pharmaceuticals Ltd	28
67.	202532	18/12/2007	M/S.Perfect Engineers	Stavley Machine & Tools Company	15-03
68.	186720	14/1/2008	M/S.Arjan Impex Pvt. Ltd.	Kumar Engineering Works	30-03
69.	208735	22/1/2008	M/s. Ats Agencies	M/s. Augur India Enterprises.	31-01
70.	183473	1/2/2008	M/s. Ashirvad Pipes Pvt. Ltd.	M/s. Jain Irrigation Systems Limited	03
71.	206510	12/2/2008	M/s. Mourya Industries	Sona Paint & Hardware	06-07
72.	203491	18/2/2008	Astral Polytechnik Ltd	Ashirvad Pipes Pvt. Ltd.	23-01

73.	203492	18/2/2008	Astral Polytechnik Ltd.	Ashirvad Pipes Pvt. Ltd.	23-01
74.	202372	22/2/2008	M/S.Decent Plastoware	Enigma Housewares	06-03
75.	200578	25/2/2008	Anchor Electricals Pvt. Ltd.	Havell's India Limited	26-04
76.	200579	25/2/2008	Anchor Electricals Pvt. Ltd.	Havell's India Limited	26-04
77.	207681	29/2/2008	M/S.Badar Textiles	Kankariya Syntex Pvt. Ltd	05-05
78.	194315	3/3/2008	M/s. Reliable Foods And Beverages	Parle Agro Pvt. Ltd	09-03
79.	200427	9/5/2008	M/s. Mayur R.O. Products	Kent R-O Systems	23-01
80.	192285	13/5/2008	M/s. Fancy Textiles	Chidambaram Ashok Kumar	15-06
81.	198195	29/5/2008	M/s. Balaji Hi-Care Products	Miracle Cosmetic Products	22-06
82.	198268	19/6/2008	Mijo Auto Gas Pvt. Ltd	Officine Lovato S.P.A	12-16
83.	184691	7/7/2008	M/s. Sancheti Appliances Pvt. Ltd.	M/S.J.K. Electrical Industries	3
84.	195169	11/8/2008	M/s. S.A. Safiullah & Co.	M/s.Supreme Paper Cups	07-01
85.	195170	11/8/2008	M/s. S.A. Safiullah & Co.	M/s.Supreme Paper Cups	07-01
86.	208450	27/8/2008	B. Braun Melsungen Ag	Eastern Medikit Limited	24-01
87.	209167	27/8/2008	B. Braun Melsungen Ag	Eastern Medikit Limited	24-01
88.	194315	28/8/2008	Weaver Aqua Everflo	Parle Agro Pvt. Ltd	09-03
89.	194315	19/9/2008 Re-filed	Weaver Aqua Everflo	Parle Agro Pvt. Ltd	09-03
90.	178564	26/9/2008	Elecom Fiscal Services Pvt. Ltd.	Kiran Shoes Manufacturers	10
91.	202794	26/9/2008	Ritz Metal Works	S.N. Industries	08-07
92.	199730	30/9/2008	Falcon Tyres Limited	Tvs Srichakra Limited	12-15
93.	174833	14/11/2008	Hahnemann Laboratory (Ayur Research)	G.D. Pharmaceuticals Limited	3
94.	211763	19/11/2008	Yug Décor Pvt. Ltd.	Nikhil Adhesives Ltd.	09-03
95.	211764	19/11/2008	Yug Décor Pvt. Ltd.	Nikhil Adhesives Ltd.	09-03
96.	211765	19/11/2008	Yug Décor Pvt. Ltd.	Nikhil Adhesives Ltd.	09-03
97.	174272	1/12/2008	M/S.Rangapure Dresses	Kamplapure Dresses	11
98.	202494	16/1/2009	Ultra Motor India Pvt.	Honda Motor Co. Ltd.,	12-16
99.	202495	16/1/2009	Ultra Motor India Pvt.	Honda Motor Co. Ltd.,	26-06
100.	202496	16/1/2009	Ultra Motor India Pvt.	Honda Motor Co. Ltd.,	26-06
101.	202497	16/1/2009	Ultra Motor India Pvt.	Honda Motor Co. Ltd.,	26-06
102.	202498	16/1/2009	Ultra Motor India Pvt.	Honda Motor Co. Ltd.,	12-16
103.	186256	6/2/2009	Swaraj Mazda Limited	Irizar. S. Coop	19-06
104.	217360	17/2/2009	Aftabuddin, Proprietor of M/s.Royal Plastics	Nirmal C. Rathod, Proprietor of Sunpower Plastics	09-01
105.	186256	2/3/2009	Swaraj Mazda Limited	Irizar. S. Coop	19-06
106.	206401	9/4/2009	Shri Ramesh Genubhu Shinde	Cello Home Products	07-05
107.	207284	17/4/2009	Kiran Shoes Manufacturers	Rohit Plastic	02-04
108.	219754	30/4/2009	M/s. Crystal Pet	Satish Kumar Narayan Mudaliar	09-01
109.	220531	14/5/2009	Maya Appliances (P) Ltd	Sairaj Industries	07-04
110.	198147	26/5/2009	Sairaj Industries	Maya Appliances (P) Ltd	31-00
111.	205741	26/5/2009	Sairaj Industries	Maya Appliances (P) Ltd	31-00
112.	198147	16/6/2009 Re-filed	Sairaj Industries	Maya Appliances (P) Ltd	31-00
113.	205741	16/6/2009	Sairaj Industries	Maya Appliances (P) Ltd	31-00

114.	200628	30/6/2009	Nitesh Panchal, Prop of Vidhi Enterprise	Patel Brothers	09-07
115.	212323	30/6/2009	Nitesh Panchal, Prop of Vidhi Enterprise	Patel Brothers	08-07
116.	212324	30/6/2009	Nitesh Panchal, Prop of Vidhi Enterprise	Patel Brothers	08-07
117.	212325	30/6/2009	Nitesh Panchal, Prop of Vidhi Enterprise	Patel Brothers	08-07
118.	206833	10/7/2009	Nnova & Co.	M/s.Tarine Enterprise	09-01
119.	217661	20/7/2009	Monaa Hotels Pvt. Ltd.	Pole-Star Gasfuse Pvt. Ltd.	23-03
120.	194882	27/7/2009	M/s. Daivies Expo	Avanti Overseas Pvt. Ltd.	07-01
121.	170084	13/8/2009	Trilok Chand & Sons Pvt. Ltd.	Financiere Des Applications De L'electricite S.A.	1
122.	182346	13/8/2009	Trilok Chand & Sons Pvt. Ltd.	Financiere Des Applications De L'electricite S.A.	1
123.	202494	13/8/2009	Avon Cycles Limited	Honda Motor Co. Ltd.,	12-16
124.	202495	13/8/2009	Avon Cycles Limited	Honda Motor Co. Ltd.,	26-06
125.	202496	13/8/2009	Avon Cycles Limited	Honda Motor Co. Ltd.,	26-06
126.	202497	13/8/2009	Avon Cycles Limited	Honda Motor Co. Ltd.,	26-06
127.	202498	13/8/2009	Avon Cycles Limited	Honda Motor Co. Ltd.,	12-16
128.	202189	25/8/2009	M/s. Pallets International	Sri Siddhi Vinayaka Pallets Pvt. Ltd.	09-08
129.	202190	25/8/2009	M/s. Pallets International	Sri Siddhi Vinayaka Pallets Pvt. Ltd.	09-08
130.	212323	4/9/2009	Artiben Subhashbhai Panchal, Proprietor of Atlas Plastic	Patel Brothers	08-07
131.	212324	4/9/2009	Artiben Subhashbhai Panchal, Proprietor of Atlas Plastic	Patel Brothers	08-07
132.	212325	4/9/2009	Artiben Subhashbhai Panchal, Proprietor of Atlas Plastic	Patel Brothers	08-07
133.	200628	4/9/2009	Artiben Subhashbhai Panchal, Proprietor of Atlas Plastic	Patel Brothers	09-07
134.	212482	8/9/2009	Shri Nachhatar Singh, Managing Director of Standard Corporation India Ltd.	Kartar Agro Industries (Pvt) Ltd.	15-03
135.	212807	8/9/2009	Standard Corporation India Ltd.	Kartar Agro Industries (Pvt) Ltd	15-03
136.	212900	8/9/2009	Standard Corporation India Ltd.	Kartar Agro Industries (Pvt) Ltd	15-03
137.	216315	8/9/2009	Standard Corporation India Ltd.	Kartar Agro Industries (Pvt) Ltd	15-99
138.	216316	8/9/2009	Standard Corporation India Ltd.	Kartar Agro Industries (Pvt) Ltd	15-99
139.	200628	14/9/2009	Shri Atul Ratilal Kotadia Trading As Ganesh Plastic Industries	Patel Brothers	09-07
140.	212323	14/9/2009	Shri Atul Ratilal Kotadia Trading As Ganesh Plastic Industries	Patel Brothers	08-07
141.	212324	14/9/2009	Shri Atul Ratilal Kotadia Trading As Ganesh Plastic Industries	Patel Brothers	08-07

142.	212325	14/9/2009	Shri Atul Ratilal Kotadia Trading As Ganesh Plastic Industries	Patel Brothers	08-07
143.	207884	20/10/2009	M/s.J ineshwar Writing Instuments Ltd	Pentel Kabushiki Kaisha	19-06
144.	212807	29/10/2009	Vishal Agricultural Works	Kartar Agro Industries (Pvt) Ltd	15-03
145.	212900	29/10/2009	Vishal Agricultural Works	Kartar Agro Industries (Pvt) Ltd	15-03
146.	216315	29/10/2009	Vishal Agricultural Works	Kartar Agro Industries (Pvt) Ltd	15-99
147.	216316	29/10/2009	Vishal Agricultural Works	Kartar Agro Industries (Pvt) Ltd	15-99
148.	207586	9/11/2009	Mohan Impressions Pvt. Ltd	Addprint India Enterprises Private Limited	19-02
149.	213889	16/11/2009	Hindustan Unilever Limted	Sunshine Oleochem Pvt. Ltd	28-03
150.	190924	17/11/2009	Adr Foods Pvt. Ltd	S.K. Industries Pvt. Ltd.	07-01
151.	214542	2/12/2009	J.P. Distilleries Pvt. Ltd.	John Distilleries Ltd	09-01
152.	212482	9/12/2009	Vishal Agricultural Works	Kartar Agro Industries (Pvt) Ltd	15-03
153.	218156	4/1/2010	Honda Motor Co. Ltd.	Avon Cycles Limited	12-11
154.	217288	5/1/2010	Aftabuddin Of M/S.Royal Plastics	Nayasa Homeware	07-02
155.	218346	20/1/2010	Eagle Flask Industries Limited	Mr. Raman Gupta	07-01
156.	220498	21/1/2010	Ronak Engineering	Sanjay Ratilal Tilala	15-09
157.	217330	22/1/2010	Milltec Machinery Pvt. Ltd.	Agritech Engineering Pvt. Ltd.	15-03
158.	220498	25/1/2010	Ronak Industries	Sanjay Ratilal Tilala	15-09
159.	220498	25/1/2010	M/s.Shree Khodiyar Engineering Works	Sanjay Ratilal Tilala	15-09
160.	175740	2/3/2010	Deemark Healthcare Pvt. Ltd	Spaceage Multiproducts (P) Ltd	3
161.	179799	2/3/2010	Deemark Healthcare Pvt. Ltd	Spaceage Multiproducts (P) Ltd	3
162.	186019	2/3/2010	Deemark Healthcare Pvt. Ltd	Spaceage Multiproducts (P) Ltd	24-01
163.	190291	2/3/2010	Deemark Healthcare Pvt. Ltd	Spaceage Multiproducts (P) Ltd	24-99
164.	178564	12/3/2010	Shri Pradeep Mathur	Kiran Shoes Manufacturers	10
165.	224326	24/3/2010	Shri Bharatbhai Vrajlal Bhanderi And Shri Hiteshbhai Vrajlal Bhander	Nestone Electronics Private Limited	13-03
166.	203390	26/3/2010	Shri Balbir Singh, Proprietor of M/s. B.S. Mechanical Works	Panesar Machine Tools	15-99
167.	204085	26/3/2010	Shri Balbir Singh, Proprietor of M/s. B.S. Mechanical Works	Panesar Machine Tools	15-09
168.	200012	26/3/2010	Liugong India Pvt. Ltd.	JCB India Limited	12-16
169.	200016	26/3/2010	Liugong India Pvt. Ltd.	JCB India Limited	12-16
170.	200017	26/3/2010	Liugong India Pvt. Ltd.	JCB India Limited	12-16
171.	200019	26/3/2010	Liugong India Pvt. Ltd.	JCB India Limited	12-16
172.	200020	26/3/2010	Liugong India Pvt. Ltd.	JCB India Limited	12-16
173.	220498	30/3/2010	Radhe Engineering Co.	Sanjay Ratilal Tilala	15-09

174.	207863	12/4/2010	Raymond Limited	Pragati Offset Private Limited	09-03
175.	224158	20/4/2010	Shri Dinesh Goyal, Proprietor of M/s. R.M.D. International	Java Impex	02-04
176.	200004	22/4/2010	M/s. Escorts Construction Equipment Ltd.	JCB India Limited	12-16
177.	200005	22/4/2010	M/s. Escorts Construction Equipment Ltd.	JCB India Limited	12-16
178.	200006	22/4/2010	M/s. Escorts Construction Equipment Ltd.	JCB India Limited	12-16
179.	200007	22/4/2010	M/s. Escorts Construction Equipment Ltd.	JCB India Limited	12-16
180.	200008	22/4/2010	M/s. Escorts Construction Equipment Ltd.	JCB India Limited	12-16
181.	200009	22/4/2010	M/s. Escorts Construction Equipment Ltd.	JCB India Limited	12-16
182.	200010	22/4/2010	M/s. Escorts Construction Equipment Ltd.	JCB India Limited	12-16
183.	200011	22/4/2010	M/s. Escorts Construction Equipment Ltd.	JCB India Limited	06-01
184.	200012	22/4/2010	M/s. Escorts Construction Equipment Ltd.	JCB India Limited	12-16
185.	200013	22/4/2010	M/s. Escorts Construction Equipment Ltd.	JCB India Limited	12-16
186.	200014	22/4/2010	M/s. Escorts Construction Equipment Ltd.	JCB India Limited	12-16
187.	200016	22/4/2010	M/s. Escorts Construction Equipment Ltd.	JCB India Limited	12-16
188.	200017	22/4/2010	M/s. Escorts Construction Equipment Ltd.	JCB India Limited	12-16
189.	200018	22/4/2010	M/s. Escorts Construction Equipment Ltd.	JCB India Limited	12-16
190.	200019	22/4/2010	M/s. Escorts Construction Equipment Ltd.	JCB India Limited	12-16
191.	200020	22/4/2010	M/s. Escorts Construction Equipment Ltd.	JCB India Limited	12-16
192.	220431	24/5/2010	Erum Hangers Private Limited	M/s. Arjun Plastic	06-08
193.	217009	4/6/2010	M/S.Sunrise Eva Products	M/s. Sunrise Eva Products	02-04
194.	215466	30/6/2010	Kartar Agro Industries (Pvt.) Ltd.	Standard Combines (Pvt.) Ltd	15-03

195.	216900	30/6/2010	Kartar Agro Industries (Pvt.) Ltd.	Standard Corporation (India) Limited	15-03
196.	216901	30/6/2010	Kartar Agro Industries (Pvt.) Ltd.	Standard Corporation (India) Limited	15-03
197.	222325	30/6/2010	Kartar Agro Industries (Pvt.) Ltd.	Standard Corporation (India) Limited	15-03
198.	220531	12/7/2010	Maya Appliances (P) Ltd	Sairaj Industries	07-04
199.	221283	28/7/2010	Shri A.P. Ramaswami	Mr. Chinnappa Gounder Thangaraj, Mrs. Chinnappa Gounder Arukkani Ammal & Mrs. Thangaraj Haipriya	06-09
200.	199730	2/8/2010	Metro Tyres Limited	Tvs Srichakra Limited	12-15
201.	223556	10/8/2010	M/S.Josco Rubbers	Asian Rubber Industries	02-04
202.	225969	14/10/2010	Gemco And East Coast Industries,	Mr. Nadeem Khan, Proprietor Of M/S.Jade Exports.	26-05
203.	225970	14/10/2010	Gemco And East Coast Industries,	Mr. Nadeem Khan, Proprietor Of M/S.Jade Exports.	26-05
204.	225977	14/10/2010	Gemco And East Coast Industries,	Mr. Nadeem Khan, Proprietor Of M/S.Jade Exports.	26-05
205.	225978	14/10/2010	Gemco And East Coast Industries,	Mr. Nadeem Khan, Proprietor Of M/S.Jade Exports.	26-05
206.	225979	14/10/2010	Gemco And East Coast Industries,	Mr. Nadeem Khan, Proprietor Of M/S.Jade Exports.	26-05
207.	209811	11/11/2010	Rahee Infratech Limited	Patil Rail Infrastructure Pvt. Ltd.	25-01
208.	216080	12/11/2010	M/S.Escorts Construction Equipment Ltd.	Standard Corporation (India) Limited	12-05
209.	227377	18/11/2010	Sohanraj Tagraj Jain, Proprietor of M/s. Writing Resources (India)	Progressive Industries	19-06
210.	227377	18/11/2010	M/s. Mutha Brothers	Progressive Industries	19-06
211.	221169	26/11/2010	M/s. Escorts Construction Equipment Ltd	JCB India Limited	12-05
212.	176934	15/12/2010	Sun-Kwik Appliances Pvt. Ltd.	Hawkins Cookers Limited	1
213.	186557	15/12/2010	Sun-Kwik Appliances Pvt. Ltd.	Hawkins Cookers Limited	07-02
214.	202658	16/12/2010	A.R. Safiullah, Proprietor of M/s. S.A. Safiullah &Co.	K.P. Laila (Indian)	07-01
215.	209811	23/12/2010	Pandrol Uk Ltd. Of Gateford	Patil Rail Infrastructure Pvt. Ltd.	25-01
216.	178564	31/12/2010	Welcome Shoes Private Limited	Kiran Shoes Manufacturers	10
217.	184669	19/1/2011	M/s.Suzu Steel (India)	M/s.Modern Door Devices (P) Ltd.	1
218.	230522	20/1/2011	M/s.Micro Precession Pvt. Ltd.	Surindra Polymers	23-04
219.	224826	24/1/2011	Reebok International Limited	Columbus Marketing (P) Limited	02-04
220.	201728	25/1/2011	Harminder Kaur, Proprietor Of Karan Industries	International Cycle Gears	12-11

221.	202108	25/1/2011	Harminder Kaur, Proprietor Of Karan Industries	International Cycle Gears	12-11
222.	216688	25/1/2011	M/s.Maya Appliances Private Limited	Zuber Jagrala, Proprietor Of M/s.Modern Plastic	31-00
223.	225348	11/2/2011	M/s.Escorts Construction Equipment Ltd.	JCB India Limited	12-05
224.	215271	14/2/2011	Ochre Home Décor Ltd	Risham K. Chawla	07-03
225.	224824	15/2/2011	M.P. Beer Products Ltd	United Breweries Limited	09-01
226.	214541	21/2/2011	Gorbatschow Wodka Kg	John Distilleries Ltd.	09-01
227.	182931	2/3/2011	K.P. Laila	A.R. Safiullah	5
228.	183132	2/3/2011	K.P. Laila	A.R. Safiullah	5
229.	219033	4/3/2011	Kiran Shoes Manufacturers	Unistar Footwears Private Limited	02-04
230.	225589	7/3/2011	Mr. Gigaram M Patel, Proprietor Of M/S.Rajeshwar Metal	M/s. Garuda Overseas	07-02
231.	178564	8/3/2011	Unistar Footwears Private Limited	Kiran Shoes Manufacturers	10
232.	225337	8/3/2011	M/s.Tejas & Co.	M/s.Jitendra Scale Traders	10-04
233.	225537	8/3/2011	M/s.Tejas & Co.	M/s.Jitendra Scale Traders	10-04
234.	225539	8/3/2011	M/s.Tejas & Co.	M/s.Jitendra Scale Traders	10-04
235.	225337	11/3/2011	M/s.Dodia Scale Co.	M/s.Jitendra Scale Traders	10-04
236.	225537	11/3/2011	M/s.Dodia Scale Co.	M/s.Jitendra Scale Traders	10-04
237.	225539	11/3/2011	M/s.Dodia Scale Co.	M/s.Jitendra Scale Traders	10-04
238.	230522	14/3/2011	Oriental American Jaima (Hk) Ltd.	Surindra Polymers	23-04
239.	225337	22/3/2011	M/s.L. Nanji Jadavji & Sons	M/s.Jitendra Scale Traders	10-04
240.	225537	22/3/2011	M/s.L. Nanji Jadavji & Sons	M/s.Jitendra Scale Traders	10-04
241.	225539	22/3/2011	M/s.L. Nanji Jadavji & Sons	M/s.Jitendra Scale Traders	10-04
242.	174903	28/3/2011	Bonjour International	Eagle Flask Industries Limited	3
243.	174904	28/3/2011	Bonjour International	Eagle Flask Industries Limited	1
244.	205014	21/4/2011	M/s.Philco Industries	Swastik Industries	30-03
245.	228633	26/4/2011	Small Tools Manufacturers Associations	Bhagwati Tools & Forgings	08-05
246.	228634	26/4/2011	Small Tools Manufacturers Associations	Bhagwati Tools & Forgings	08-05
247.	225973	10/5/2011	Gemco And East Coast Industries,	Mr. Nadeem Khan, Proprietor Of M/S.Jade Exports.	26-05
248.	225974	10/5/2011	Gemco And East Coast Industries,	Mr. Nadeem Khan, Proprietor Of M/S.Jade Exports.	26-05
249.	231953	12/5/2011	Vidya Bhushan Jain	M/s.Balaji Industries	09-05
250.	224824	26/5/2011	Shri Maheshbhai C. Vala, Proprietor Of Shree Khodiyar Engineering Works	United Breweries Limited	09-01
251.	194990	31/5/2011	Shri Raman Gupta, Partner Of Bonjour International	Veeplast Houseware Pvt. Ltd.	07-01
252.	210327	9/6/2011	Artiben S Panchal, Proprietor Of Atlas Plastic	M/s.Krishna Plastic Industries	09-07

253.	211639	9/6/2011	Artiben S Panchal, Proprietor Of Atlas Plastic	Dinesh Patel, Proprietor Of E Seals Technologies	09-07
254.	218986	9/6/2011	Artiben S Panchal, Proprietor Of Atlas Plastic	Mrs. Shilpa Nitesh Panchal, Proprietor Of M/S.C.G. Enterprise	08-07
255.	224824	24/6/2011	Shri Shailesh Vallabhdas Makadia Trading As Radhe Engineering Co.	United Breweries Limited	09-01
256.	229402	29/6/2011	Shri B.M. Viramgama, The Proprietor Of Trishul Engineering	Jagdishbhai A. Gangajalia, Proprietor Of Anand Engineers	15-99
257.	229402	29/6/2011	Shri A J Sorathiya, Proprietor Of Poonam Agro Equipment	Jagdishbhai A. Gangajalia, Proprietor Of Anand Engineers	15-99
258.	225338	5/7/2011	Shri A.K. Salot Of M/S.Tejas & Co	Mr. J V Makwana	10-04
259.	225342	5/7/2011	Shri A.K. Salot Of M/S.Tejas & Co	Mr. J V Makwana	10-04
260.	223005	5/7/2011	Shri Kalpesh Mansukhbhai Dudhatra	M/s.Sanvi Enterprise	08-06
261.	227878	5/7/2011	A.G. Honga, R.G. Honga & N.D. Meghabi All Partners Of Kuldevi Engineers	Shri P.B. Raiyani, Shri A.L. Patel, Smt. J.G. Patel And Smt. P.D. Patel	07-04
262.	230862	5/7/2011	Shri P.B. Raiyani, Shri A.L. Patel, Smt. J.G. Patel And Smt. P.D. Patel	Rajendrasinh Kanaksinh Jhala	31-00
263.	229496	12/7/2011	M/s.Searose Exim Pvt. Ltd	M/s.Freedom Industries Ltd.	15-02
264.	229607	12/7/2011	M/s.Searose Exim Pvt. Ltd	M/s.Freedom Industries Ltd.	15-02
265.	229609	12/7/2011	M/s.Searose Exim Pvt. Ltd	M/s.Freedom Industries Ltd.	15-02
266.	220949	19/7/2011	Nestone Electronics Private Limited	B.V. Bhanderi and H.V. Bhanderi	13-03
267.	229267	25/7/2011	Klassic Wheels Pvt. Ltd.	Steel Strips Wheels Ltd.	12-16
268.	233799	28/7/2011	M/s.Micolube India Limited	Meco Lubricants Pvt. Ltd.	09-03
269.	231834	16/8/2011	Freeman's Measures Pvt. Limited	Sushil Kumar Lohia, Proprietor M/S.Lohia Trade Concern	10-04
270.	232912	19/8/2011	M/s. Sanvi Enterprise	Kalpesh M Dudhatra Of Jay Balaji Industries	08-06
271.	199650	29/8/2011	Princeware International Pvt. Ltd	Tokyo Plast International Ltd.	07-07
272.	222514	7/9/2011	Shri Vishnuprasad Mohanlal Panchal	Geeli Machinery Works	15-05
273.	203399	19/9/2011	Rahul Aggarwal And Smt. Asha Aggarwal, Partners of M/s.Medallay Exports	Ajay Industries	08-05
274.	236076	3/11/2011	M/s. Rekha Metal Works	Neeraj Kumar, Proprietor Of M/S.Priyanka Enterprises	08-07

275.	237341	21/11/2011	The Supreme Industries Limited	National Plasto Products Private Limited	06-01
276.	200005	9/12/2011	Bull Machines (Pvt.) Limited	JCB India Limited	12-16
277.	200016	9/12/2011	Bull Machines (Pvt.) Limited	JCB India Limited	12-16
278.	200017	9/12/2011	Bull Machines (Pvt.) Limited	JCB India Limited	12-16
279.	200018	9/12/2011	Bull Machines (Pvt.) Limited	JCB India Limited	12-16
280.	200019	9/12/2011	Bull Machines (Pvt.) Limited	JCB India Limited	12-16
281.	213621	29/12/2011	M/s. Nuzen Herbal Private Limited	Zenna Plastics Limited	09-01
282.	226044	3/1/2012	Swastik Industries	Ashish Padia	30-03
283.	181088	24/1/2012	M/s. Asian Rubber Industries	Josco Rubbers	10
284.	181193	24/1/2012	M/s. Asian Rubber Industries	Josco Rubbers	10
285.	181829	24/1/2012	M/s. Asian Rubber Industries	Josco Rubbers	10
286.	235010	30/1/2012	Mr. Subhash Arora, Prop of Real Line Home Appliances	Rohit Bhatia, Trading As M/s. Bhatia Enterprises	07-01
287.	187305	21/2/2012	The Bangalore Switchgear Manufacturer's Association	M/s. Millborn	13-03
288.	222849	27/2/2012	Hindustan Unilever Limited	Sunshine Oleochem Ltd.	28-02
289.	225311	7/3/2012	Bonjour International	Eagle Home Appliances Pvt. Ltd.	09-01
290.	225311	7/3/2012	Bonjour Impex	Eagle Home Appliances Pvt. Ltd.	09-01
291.	221959	20/3/2012	Dart Industries Inc.	Mr. Vijay Kumar Bansal, Indian Citizen, Proprietor of M/s.Techno Plast	09-01
292.	228502	20/3/2012	Dart Industries Inc.	Reliance Plast	09-01
293.	229248	19/4/2012	Jigar Plast (India)	Multi Colour Packs	07-02
294.	232519	19/4/2012	Jigar Plast (India)	Tokyo Plast International Ltd.	07-02
295.	185128	19/4/2012	Shri Jagdish Arora, Proprietor of M/s. Krishna Industries	Navin Kohli,	04-01
296.	187859	19/4/2012	Shri Jagdish Arora, Proprietor of M/s. Krishna Industries	Navin Kohli,	30-01
297.	191317	19/4/2012	Shri Jagdish Arora, Proprietor of M/s. Krishna Industries	Navin Kohli,	30-04
298.	198634	19/4/2012	Shri Jagdish Arora, Proprietor of M/s. Krishna Industries	Navin Kohli,	30-01
299.	235800	27/4/2012	Veeplast Houseware Private Limited	Bonjour International	07-01
300.	225175	7/5/2012	The Supreme Industries Limited	Uma Plastics Limited	06-01

301.	178564	15/5/2012	Renu Sahni Trading As Naveen Boot House	Kiran Shoes Manufacturers	10
302.	191615	15/5/2012	Shri Baljeet Chand Rehal, Sole Proprietor of M/s.Ess Kay Appliances (India)	Advance Appliances (India), An Indian Proprietorship Firm Whose Proprietor Is Vipul Garg	15-05
303.	191086	7/6/2012	Mr. Vijay Kumar Bansal Of M/S.Techno Plast	Dart Industries Inc	07-01
304.	206748	13/6/2012	Tokyo Plast International Ltd.	Jigar Plast (India)	07-02
305.	213951	28/6/2012	M/s.Bhiwadi Plolymers Limited	Raj Plastic Industry	09-03
306.	204495	11/7/2012	Uma Plastics Limited	The Supreme Industries Ltd,	06-01
307.	198384	6/7/2012	Samsung India Electronics Pvt. Ltd.	Whirlpool Of India Limited	15-07
308.	198386	6/7/2012	Samsung India Electronics Pvt. Ltd.	Whirlpool Of India Limited	15-07
309.	198387	6/7/2012	Samsung India Electronics Pvt. Ltd.	Whirlpool Of India Limited	15-07
310.	202764	6/7/2012	Samsung India Electronics Pvt. Ltd.	Whirlpool Of India Limited	15-99
311.	202765	6/7/2012	Samsung India Electronics Pvt. Ltd.	Whirlpool Of India Limited	15-99
312.	202766	6/7/2012	Samsung India Electronics Pvt. Ltd.	Whirlpool Of India Limited	15-99
313.	216534	19/7/2012	Palm Fibre (India) Pvt. Ltd.	Mr. K.S. Sanjeev	06-11
314.	198384	6/8/2012	L.G. Electronics India Pvt. Ltd.	Whirlpool Of India Limited	15-07
315.	198386	6/8/2012	L.G. Electronics India Pvt. Ltd.	Whirlpool Of India Limited	15-07
316.	198387	6/8/2012	L.G. Electronics India Pvt. Ltd.	Whirlpool Of India Limited	15-07
317.	202764	6/8/2012	L.G. Electronics India Pvt. Ltd.	Whirlpool Of India Limited	15-99
318.	202765	6/8/2012	L.G. Electronics India Pvt. Ltd.	Whirlpool Of India Limited	15-99
319.	202766	6/8/2012	L.G. Electronics India Pvt. Ltd.	Whirlpool Of India Limited	15-99
320.	238624	6/8/2012	Tierra Food India Private Limited	Grove Limited	01-01
321.	238625	6/8/2012	Tierra Food India Private Limited	Grove Limited	01-01
322.	226911	8/8/2012	Shri Neeraj Kumar Proprietor Of M/s.Priyanka Enterprises	M/S.Rekha Metal Works	08-07
323.	236611	21/8/2012	Mitsubishi Pencil Company Ltd	Flair Writing Instruments	19-06
324.	239181	21/8/2012	Mitsubishi Pencil Company Ltd	Flair Pens And Plastics Industries	19-06
325.	225286	7/9/2012	Shri Sanjay Kapoor Trading As M/s.Ambala Associates	Osaw Industrial Products Pvt. Ltd.	10-04
326.	237537	27/9/2012	Oasis Distileries Limited	United Spirits Limited	09-01
327.	230518	1/11/2012	Shri V.V. Chandran	Atco Udyog	15-99
328.	233431	19/11/2012	Dgt Holding B.V.	Sunny Scientific International	10-03
329.	196859	30/11/2012	Itc Limited	Philip Morris Products S.A.	27-06
330.	209830	30/11/2012	Itc Limited	Godfrey Phillips India Limited	27-06

331.	222799	24/12/2012	Manish Goyal	Anuradha Doval	09-01
332.	233559	10/12/2012	Ningbo Chenwu Humidifying Equipment Factory	Mr. Paresh Ajitkumar Kapoor	23-04
333.	242970	11/12/2012	Whirlpool Of India Ltd.	Videocon Industries Limited (Formerly In The Name Of Pradeepkumar Nandlal Dhoot)	15-05
334.	240389	1/1/2013	M/s.Nakoda Plast Industries	Klik Plastic Art Pvt. Ltd	09-03
335.	224824	28/1/2013	Som Distilleries & Breweries Limited	United Breweries Limited	09-01
336.	223479	28/1/2013	Som Distilleries & Breweries Limited	Skol Breweries Ltd	09-01
337.	223833	5/2/2013	Videocon Industries Limited	Whirlpool Of India Limited	15-05
338.	223835	5/2/2013	Videocon Industries Limited	Whirlpool Of India Limited	15-05
339.	226194	12/2/2013	Gopal Glass Works Ltd.	Jai Mata Glass Limited	05-06
340.	215053	1/3/2013	Al Aziz Plastics Pvt. Ltd.	Georg Fischer Wavin Ag	23-01
341.	215054	1/3/2013	Al Aziz Plastics Pvt. Ltd.	Georg Fischer Wavin Ag	23-01
342.	215056	1/3/2013	Al Aziz Plastics Pvt. Ltd.	Georg Fischer Wavin Ag	23-01
343.	215057	1/3/2013	Al Aziz Plastics Pvt. Ltd.	Georg Fischer Wavin Ag	23-01
344.	199828	13/3/2013	Whirlpool Of India Ltd.	Samsung Electronics Co. Ltd.	15-05
345.	201805	13/3/2013	Whirlpool Of India Ltd.	Samsung Electronics Co. Ltd.	15-07
346.	215324	13/3/2013	Whirlpool Of India Ltd.	Samsung Electronics Co. Ltd.	23-04
347.	215325	13/3/2013	Whirlpool Of India Ltd.	Samsung Electronics Co. Ltd.	23-04
348.	216086	13/3/2013	Whirlpool Of India Ltd.	Samsung Electronics Co. Ltd.	15-05
349.	240453	13/3/2013	Abhinandan Ramdas Badhe	Rashmi Satish Bhute	02-03
350.	247757	1/4/2013	Shri Amitbhai M. Chovatiya & Shri Ashsishbhai G.Gadhiya, Both Indian National Partners of M/s.Foram Sales Corporation	Sandeepbhai Girdharbhai Of Raj Technocast	08-06
351.	229784	1/4/2013	Shri Naresh Sagar, Proprietor of M/s.Cure Pharma	Vetsfarma Ltd.	09-03
352.	216739	18/4/2013	Nova Enterprises	Hi Tech Insulators Pvt. Ltd.	13-99
353.	230365	9/5/2013	M/s. Escorts Ltd.	Action Construction Equipment Ltd.	12-05
354.	214478	23/5/2013	K.Nirmala Rani, Solely Trading As Sk Steeltech	Attur Steels Pvt. Ltd.	25-01
355.	244213	7/6/2013	Jagdhir Singh, Sole Proprietor of M/s. M.B. Machinery Corporation	M.B. Exports Limited	15-02
356.	244214	7/6/2013	Jagdhir Singh, Sole Proprietor of M/s. M.B. Machinery Corporation	M.B. Exports Limited	15-02
357.	244215	7/6/2013	Jagdhir Singh, Sole Proprietor of M/s. M.B. Machinery Corporation	M.B. Exports Limited	15-02
358.	244439	7/6/2013	Jagdhir Singh, Sole Proprietor of M/s. M.B. Machinery Corporation	M.B. Exports Limited	15-02

359.	244587	7/6/2013	Jagdhir Singh, Sole Proprietor of M/s. M.B. Machinery Corporation	M.B. Exports Limited	15-02
360.	244588	7/6/2013	Jagdhir Singh, Sole Proprietor of M/s. M.B. Machinery Corporation	M.B. Exports Limited	15-02
361.	213535	4/6/2013	K.Nirmala Rani, Solely Trading As S K Steeltech	Attur Steels Pvt. Ltd.	25-01
362.	199742	12/6/2013	Satish Saini, Proprietor of M/s. Atco Udyog	V.V. Chandran	22-06
363.	241313	13/6/2013	Havells India Ltd	Crompton Greaves Limited	23-04
364.	243925	26/6/2013	Add Print India Enterprises Pvt. Ltd.	Mr. Jitendrakumar A Patel	19-99
365.	213535	24/5/2013	M/S.Ars Metals Ltd.	Attur Steels Pvt. Ltd.	25-01
366.	214478	24/5/2013	M/S.Ars Metals Ltd	Attur Steels Pvt. Ltd.	25-01
367.	211638	12/8/2013	Artiben Subhasbhai Panchal, Proprietor of Atlas Plastic	Patel Brothers	09-07
368.	211640	12/8/2013	Artiben Subhasbhai Panchal, Proprietor of Atlas Plastic	Patel Brothers	09-07
369.	223115	22/8/2013	Sri Jackson Mathew	Kush Sharma, Proprietor of Axis Promotions & Trading	07-01
370.	223116	22/8/2013	Sri Jackson Mathew	Kush Sharma, Proprietor of Axis Promotions & Trading	07-01
371.	206899	27/8/2013	Sonia Chadha, Proprietor of M/S.Nimson International	Amit Jain	09-01
372.	244624	20/9/2013	Havells India Ltd	Philips Electronics India Limited	26-05
373.	205859	19/9/2013	Mr. Declan Kelly	J & J Buildcon Pvt. Ltd.	20-03
374.	205860	19/9/2013	Mr. Declan Kelly	J & J Buildcon Pvt. Ltd.	20-03
375.	205861	19/9/2013	Mr. Declan Kelly	J & J Buildcon Pvt. Ltd.	20-03
376.	205862	19/9/2013	Mr. Declan Kelly	J & J Buildcon Pvt. Ltd.	20-03
377.	205863	19/9/2013	Mr. Declan Kelly	J & J Buildcon Pvt. Ltd.	20-03
378.	205864	19/9/2013	Mr. Declan Kelly	J & J Buildcon Pvt. Ltd.	20-03
379.	240937	15/10/2013	Pregna International Limited	Smb Corporation Of India	24-02
380.	249132	21/10/2013	M/s.Mahavir Polymers Pvt. Ltd	A-One Footarts Pvt. Ltd.	02-04
381.	249133	21/10/2013	M/S.Mahavir Polymers Pvt. Ltd	A-One Footarts Pvt. Ltd.	02-04
382.	249291	28/10/2013	Suresh Maruti More, Proprietor of M/s. Enopeck Seals (India)	Deepak Jagganath Koli	08-07
383.	249292	28/10/2013	Suresh Maruti More, Proprietor of M/s. Enopeck Seals (India)	Deepak Jagganath Koli	08-07
384.	249293	28/10/2013	Suresh Maruti More, Proprietor of M/s. Enopeck Seals (India)	Deepak Jagganath Koli	08-07
385.	250542	31/10/2013	Kochupaul P O, Trading As Mariya Plastics	Fr. Joykoothur	26-01
386.	242829	22/11/2013	Mahesh Gupta	A.N. Polymers Private Limited, India	23-01
387.	189251	2/12/2013	Ambika Overseas	Freemans Measures Limited	10-04
388.	180562	4/12/2013	Ambika Overseas	Freemans Measures Limited	01
389.	188502	4/12/2013	Ambika Overseas	Freemans Measures Limited	10-04

390.	234620	8/1/2014	Hindustan Unilever Limited	Mr. Alpesh Kantilal Patel	22-06
391.	207586	17/1/2014	Artlilne (India) Pvt. Ltd.	Addprint India Enterprises Private Limited	19-02
392.	252082	12/2/2014	T.K. Shawal Industries Private Limited	Kay Cee Exports	02-05
393.	230518	21/2/2014	Shri V.V. Chandran	Atco Udyog	15-99
394.	254883	28/2/2014	Osaw Industrial Products Pvt. Ltd.	Cadence Electronic Systems	10-04
395.	245981	21/3/2014	M/s.Escorts Ltd.	Action Construction Equipment Ltd.	15-02
396.	239649	28/3/2014	Hemkunt Speciality Cones Pvt. Ltd	Punnet Duggal, Deepak Duggal And Manju Duggal (Director), Trading As Kap Cones Pvt. Ltd.	09-03
397.	214598	16/4/2014	Sunil Trikamlal Panchal, Proprietor of Shreeji Industries	Manoj Seals & Locks	09-07
398.	227604	16/4/2014	Krpc Enterprises Pvt. Ltd	D. Light Design Limited	26-05
399.	233801	16/4/2014	Krpc Enterprises Pvt. Ltd	D. Light Design Limited	26-05
400.	243423	28/4/2014	Komal Trading Corporation	Manak Steel	07-02
401.	194305	30/4/2014	M/s. Chhaparia Industries Pvt. Ltd.	Symphony Ltd. (*Formerly In The Name Of* Achal Anil Bakeri)	23-04
402.	246101	21/5/2014	M/s. Mullackal Polymers	M/s.Saraswati Plasto Tech India Pvt. Ltd.	09-01
403.	224316	22/5/2014	Burberry Limited	Khadim India Limited	03-01
404.	253967	22/5/2014	Sunita Puri, Sole Proprietor Of M/S.Deluxe Petrochem (India)	Mahindra Oil Company	09-01
405.	205811	19/5/2014	Hatsun Agro Product Ltd.	Hindustan Unilever Limited	01-01
406.	221941	19/6/2014	D.J. Sachdeva, Prop. Of M/S.D.J. Enterprises	Steelbird Hi-Tech India Ltd	12-16
407.	221942	19/6/2014	D.J. Sachdeva, Prop. Of M/S.D.J. Enterprises	Steelbird Hi-Tech India Ltd	12-16
408.	220712	24/6/2014	M/s. Daivies Expo	Shri Munit Kumar & Shri Devinder Kumar, Trading As Kumar Industries	30-03
409.	220714	24/6/2014	M/s. Daivies Expo	Shri Munit Kumar & Shri Devinder Kumar, Trading As Kumar Industries	30-03
410.	227604	26/6/2014	Ral Consumer Products Ltd.	D. Light Design Limited	26-05
411.	233801	26/6/2014	Ral Consumer Products Ltd.	D. Light Design Limited	26-05
412.	234644	26/6/2014	Ral Consumer Products Ltd.	D. Light Design Limited	26-05
413.	182372	7/7/2014	Atul Ratilal Kotdia, Trading As Ganesh Plasitc Industries	Artiben Subhashbhai Panchal, Sole Proprietor of Atlas Plastic	3
414.	193033	7/7/2014	Atul Ratilal Kotdia, Trading As Ganesh Plasitc Industries	Artiben Subhashbhai Panchal, Sole Proprietor of Atlas Plastic	08-07

415.	205868	7/7/2014	Atul Ratilal Kotdia, Trading As Ganesh Plasitc Industries	Artiben Subhashbhai Panchal, Sole Proprietor of Atlas Plastic	08-07
416.	205869	7/7/2014	Atul Ratilal Kotdia, Trading As Ganesh Plasitc Industries	Artiben Subhashbhai Panchal, Sole Proprietor of Atlas Plastic	08-07
417.	205870	7/7/2014	Atul Ratilal Kotdia, Trading As Ganesh Plasitc Industries	Artiben Subhashbhai Panchal, Sole Proprietor of Atlas Plastic	08-07
418.	205871	7/7/2014	Atul Ratilal Kotdia, Trading As Ganesh Plasitc Industries	Artiben Subhashbhai Panchal, Sole Proprietor of Atlas Plastic	08-07
419.	182371	7/7/2014	Atul Ratilal Kotdia, Trading As Ganesh Plasitc Industries	Artiben Subhashbhai Panchal, Sole Proprietor of Atlas Plastic	3
420.	255077	9/7/2014	Uflex Ltd.	Mr. Aman Asthana And Mr. Brajesh Asthana	15-99
421.	254659	24/7/2014	Uflex Ltd.	M/s. Eassar International	15-99
422.	216226	30/7/2014	Ral Consumer Products Ltd.	D. Light Design, Inc	26-05
423.	254659	4/8/2014	Shri K.K. Modak, Advocate	M/s. Eassar International	15-99
424.	255077	4/8/2014	Shri K.K. Modak, Advocate	Mr. Aman Asthana And Mr. Brajesh Asthana	15-99
425.	225286	22/8/2014	M/s. Cadence Electronic Systems	Osaw Industrial Products Pvt. Ltd.	10-04
426.	220712	27/8/2014	Ankur Exports	Shri Munit Kumar & Shri Devinder Kumar, Trading As Kumar Industries	30-03
427.	220713	27/8/2014	Ankur Exports	Shri Munit Kumar & Shri Devinder Kumar, Trading As Kumar Industries	30-03
428.	220714	27/8/2014	Ankur Exports	Shri Munit Kumar & Shri Devinder Kumar, Trading As Kumar Industries	30-03
429.	253377	2/9/2014	M/s.Pymen Cable Corporation	Of Prabh Dayal Om Parkash Infrastructure Pvt. Ltd.	09-02
430.	238704	25/9/2014	Mohd. Waheed, Partner Of M/S.Syndicate Handicrafts	Mr. Syed Daood Patel	27-02
431.	255218	30/9/2014	Shrishti Electromech Private Limited	Sanjiv Kumar Gupta	15-01
432.	255219	30/9/2014	Shrishti Electromech Private Limited	Sanjiv Kumar Gupta	13-01
433.	259492	9/10/2014	Shri Ashok Kumar Mittal, Partner of M/s.Pitamber Glass Works	Amar Singh Yadav, Trading As M/s. S.N. Glass Decoraters	11-02
434.	259493	9/10/2014	Shri Ashok Kumar Mittal, Partner of M/s.Pitamber Glass Works	Amar Singh Yadav, Trading As M/s. S.N. Glass Decoraters	11-02
435.	259494	9/10/2014	Shri Ashok Kumar Mittal, Partner of M/s.Pitamber Glass Works	Amar Singh Yadav, Trading As M/s. S.N. Glass Decoraters	11-02

436.	259495	9/10/2014	Shri Ashok Kumar Mittal, Partner of M/s.Pitamber Glass Works	Amar Singh Yadav, Trading As M/s. S.N. Glass Decoraters	11-02
437.	259496	9/10/2014	Shri Ashok Kumar Mittal, Partner of M/s.Pitamber Glass Works	Amar Singh Yadav, Trading As M/s. S.N. Glass Decoraters	11-02
438.	259497	9/10/2014	Shri Ashok Kumar Mittal, Partner of M/s.Pitamber Glass Works	Amar Singh Yadav, Trading As M/s. S.N. Glass Decoraters	11-02
439.	259498	9/10/2014	Shri Ashok Kumar Mittal, Partner of M/s.Pitamber Glass Works	Amar Singh Yadav, Trading As M/s. S.N. Glass Decoraters	11-02
440.	259499	9/10/2014	Shri Ashok Kumar Mittal, Partner of M/s.Pitamber Glass Works	Amar Singh Yadav, Trading As M/s. S.N. Glass Decoraters	11-02
441.	259500	9/10/2014	Shri Ashok Kumar Mittal, Partner of M/s.Pitamber Glass Works	Amar Singh Yadav, Trading As M/s. S.N. Glass Decoraters	11-02
442.	259501	9/10/2014	Shri Ashok Kumar Mittal, Partner of M/s.Pitamber Glass Works	Amar Singh Yadav, Trading As M/s. S.N. Glass Decoraters	11-02
443.	259502	9/10/2014	Shri Ashok Kumar Mittal, Partner of M/s.Pitamber Glass Works	Amar Singh Yadav, Trading As M/s. S.N. Glass Decoraters	11-02
444.	259503	9/10/2014	Shri Ashok Kumar Mittal, Partner of M/s.Pitamber Glass Works	Amar Singh Yadav, Trading As M/s. S.N. Glass Decoraters	11-02
445.	259504	9/10/2014	Shri Ashok Kumar Mittal, Partner of M/s.Pitamber Glass Works	Amar Singh Yadav, Trading As M/s. S.N. Glass Decoraters	11-02
446.	259505	9/10/2014	Shri Ashok Kumar Mittal, Partner of M/s.Pitamber Glass Works	Amar Singh Yadav, Trading As M/s. S.N. Glass Decoraters	11-02
447.	259506	9/10/2014	Shri Ashok Kumar Mittal, Partner of M/s.Pitamber Glass Works	Amar Singh Yadav, Trading As M/s. S.N. Glass Decoraters	11-02
448.	259507	9/10/2014	Shri Ashok Kumar Mittal, Partner of M/s.Pitamber Glass Works	Amar Singh Yadav, Trading As M/s. S.N. Glass Decoraters	11-02
449.	259508	9/10/2014	Shri Ashok Kumar Mittal, Partner of M/s.Pitamber Glass Works	Amar Singh Yadav, Trading As M/s. S.N. Glass Decoraters	11-02

450.	259509	9/10/2014	Shri Ashok Kumar Mittal, Partner of M/s.Pitamber Glass Works	Amar Singh Yadav, Trading As M/s. S.N. Glass Decoraters	11-02
451.	259510	9/10/2014	Shri Ashok Kumar Mittal, Partner of M/s.Pitamber Glass Works	Amar Singh Yadav, Trading As M/s. S.N. Glass Decoraters	11-02
452.	259511	9/10/2014	Shri Ashok Kumar Mittal, Partner of M/s.Pitamber Glass Works	Amar Singh Yadav, Trading As M/s. S.N. Glass Decoraters	11-02
453.	259512	9/10/2014	Shri Ashok Kumar Mittal, Partner of M/s.Pitamber Glass Works	Amar Singh Yadav, Trading As M/s. S.N. Glass Decoraters	11-02
454.	259513	9/10/2014	Shri Ashok Kumar Mittal, Partner of M/s.Pitamber Glass Works	Amar Singh Yadav, Trading As M/s. S.N. Glass Decoraters	11-02
455.	259514	9/10/2014	Shri Ashok Kumar Mittal, Partner of M/s.Pitamber Glass Works	Amar Singh Yadav, Trading As M/s. S.N. Glass Decoraters	11-02
456.	259515	9/10/2014	Shri Ashok Kumar Mittal, Partner of M/s.Pitamber Glass Works	Amar Singh Yadav, Trading As M/s. S.N. Glass Decoraters	11-02
457.	259516	9/10/2014	Shri Ashok Kumar Mittal, Partner of M/s.Pitamber Glass Works	Amar Singh Yadav, Trading As M/s. S.N. Glass Decoraters	11-02
458.	248925	19/11/2014	Whirlpool of India Ltd.	Ganpati Moulders Private Limited	15-05
459.	256062	5/11/2014	M/s. Rajendra Distributors	Bharat Balar	07-02
460.	259214	1/12/2014	Symphony Limited	Chhaparia Industries Pvt. Ltd.	23-04
461.	243377	26/12/2014	Steel Bird Hi-Tech India Limited	Surinder Kumar (An Indian National), Trading As M/s. S.K. Sachdeva	12-16
462.	253936	23/12/2014	Innovative Tech Pack Limited	Pramit Sanghvi And Dewang Sanghavi, Partners Trading As V2 Corp.	09-01
463.	237837	8/1/2015	Ramachandran Damodaran	Yash Highvoltage Insulators Pvt. Ltd.	13-02
464.	237840	8/1/2015	Ramachandran Damodaran	Yash Highvoltage Insulators Pvt. Ltd.	13-02
465.	254059	8/1/2015	Ramachandran Damodaran	Yash Highvoltage Insulators Pvt. Ltd.	13-02
466.	216632	19/1/2015	M/s. Crocs Inc., Usa.	Kcm International	02-04
467.	217009	19/1/2015	M/s. Crocs Inc., Usa.	Sunrise Eva Products	02-04
468.	249466	23/1/2015	Kay Tee Cycle Industries	M/s. Veenu International	12-11
469.	201714	19/1/2015	M/s. Goldmedal Electricals Pvt. Ltd.	Bticino S.P.A.	13-03
470.	210593	19/1/2015	M/s. Goldmedal Electricals Pvt. Ltd.	Legrand France & Legrand Snc	13-03
471.	210595	19/1/2015	M/s. Goldmedal Electricals Pvt. Ltd.	Legrand France & Legrand Snc	13-03

472.	210598	19/1/2015	M/s. Goldmedal Electricals Pvt. Ltd.	Legrand France & Legrand Snc	13-03
473.	210600	19/1/2015	M/s. Goldmedal Electricals Pvt. Ltd.	Legrand France & Legrand Snc	13-03
474.	231553	4/2/2015	M/s. Srg Industreis	Vip Industries Limited	06-01
475.	259882	26/3/2015	Hindustan Unilever Limited	Alpesh Kantilal Patel	23-01
476.	258679	30/3/2015	Artiben Subhashbhai Panchal, Sole Proprietor Of Atlas Plastic	Mr. Shailendra Patni	08-07
477.	258943	30/3/2015	Artiben Subhashbhai Panchal, Sole Proprietor Of Atlas Plastic	Mr. Shailendra Patni	08-07
478.	266766	6/4/2015	Symphony Ltd.	Wim Plast Ltd.	23-04
479.	266767	6/4/2015	Symphony Ltd.	Wim Plast Ltd.	23-04
480.	266768	6/4/2015	Symphony Ltd.	Wim Plast Ltd.	23-04
481.	265190	13/4/2015	M/s. J. M. Sales Corporation	Umang Jindal	15-03
482.	251772	16/4/2015	Sohum Autogas Systems Pvt. Ltd.	Surendra Khandelwal, Proprietor Of S P Combined	29-99
483.	247310	10/4/2015	Ashirvad Pipes Pvt. Ltd.	Suparna Plastics Pvt. Ltd	23-01
484.	232944	30/4/2015	Tirth Agro Technology Pvt. Ltd.	New Holland Fiat (India) Pvt. Ltd.	15-03
485.	194305	8/5/2015	Wim Plast Ltd.	Symphony Ltd. (*Formerly In The Name Of* Achal Anil Bakeri)	23-04
486.	198241	8/5/2015	Wim Plast Ltd.	Symphony Ltd. (*Formerly In The Name Of* Achal Anil Bakeri)	23-04
487.	221068	8/5/2015	Wim Plast Ltd.	Symphony Ltd. (*Formerly In The Name Of* Achal Anil Bakeri)	23-04
488.	227069	8/5/2015	Wim Plast Ltd.	Symphony Ltd. (*Formerly In The Name Of* Achal Anil Bakeri)	23-04
489.	256375	27/5/2015	Mr. Arun K. Jajodia, Sole Proprietor Of M/S.Tirupati Sprinklers	Flexituff International Limited	23-01
490.	260125	8/6/2015	Symphony Limited	Raco Auto Pvt.Ltd.	23-04
491.	264002	8/6/2015	Symphony Limited	Raco Auto Pvt.Ltd.	23-04
492.	256201	9/6/2015	Endico Power Tools (India)	M/s. Joginder Electric Works	15-99
493.	256202	9/6/2015	Endico Power Tools (India)	M/s. Joginder Electric Works	15-99
494.	251244	10/6/2015	Amrendra Shah, Sole Proprietor of Shrdha Enterprises	Vega Auto Accessories Pvt. Ltd.	02-03
495.	209976	16/6/2015	Weener Empire Plastics Pvt. Ltd.	Parag Plastic	09-01
496.	213110	19/6/2015	Weener Empire Plastics Pvt. Ltd.	M/s. Parag Plastic	09-01
497.	259110	7/7/2015	Varmora Plastech Private Limited	The Supreme Industries Limited	06-03
498.	259518	7/7/2015	Varmora Plastech Private Limited	The Supreme Industries Limited	06-03
499.	259521	7/7/2015	Varmora Plastech Private Limited	The Supreme Industries Limited	06-03

500.	250871	20/7/2015	Mr. Shailendra Virendra Patni	The Procter & Gamble Company	09-05
501.	205871	5/8/2015	Mr. Shailendra Virendra Patni	Artiben Subhashbhai Panchal, Sole Proprietor of Atlas Plastic	08-07
502.	228795	31/7/2015	Cello Pens Private Ltd.	A.W. Faber-Castell (India) Private Limited	19-06
503.	205871	5/8/2015	Mr. Shailendra Virendra Patni	Artiben Subhashbhai Panchal, sole proprietor of Atlas Plastic	08-07

CANCELLATION PROCEEDINGS
under Section 19 of the Designs Act, 2000

"The Asstt. Controller of Patents & Designs by his order dated 20/8/2015 in respect of petition for cancellation (Petition No. Can/040/2010) **filed by** Erum Hangers Private Limited, **an Indian company of LGF 9, Charmwood Plaza, Eros Garden, Surajkund Road, Faridabad, Haryana 121009, India on 24/5/2010 cancelled the registration of registered Design No.** 220431 **dated 23rd December 2008 under class 06-08 titled as 'Hanger' in the name of** M/s. Arjun Plastic, **an Indian partnership firm having the partners 1) Bharat Bachu Bhai Chhatbar, residing at # 759/A, 2nd E Block, 2nd Main Rajajinagar, Bangalore – 560010, India 2) Vijay Bachu Bhai Chhatbar, residing at 1288 Shabri, 12th 'C' Cross, 8th Main 2nd Stage, Mahalaxmipuram, WOC Rajainagar, Bangalore – 560086, India all Indian nationals, having the principal office at VP 9 & 10, 1st Stage, Peenya Industrial Estate Area, Bangalore- 560058, India. ."**

COPYRIGHT PUBLICATION

SL NO	REGISTERED DESIGN NUMBERS	RENEWED ON
1.	195530	24.08.2015
2.	196164	29.06.2015
3.	201188	23.07.2015
4.	201219	18.08.2015
5.	201449	28.07.2015
6.	201551	28.07.2015
7.	201552	28.07.2015
8.	201553	28.07.2015
9.	201713	28.07.2015
10.	202054	18.08.2015
11.	202464	24.08.2015

REGISTRATION OF DESIGNS

The following designs have been registered. They are now open for public inspection. In the following each entry the Date of Registration is shown. The Priority Number, Priority Date and Priority Country are also shown

DESIGN NUMBER	213389
CLASS	08-09
1)POOJA HARDWARE PRIVATE LIMITED., 24/170, KULDEEP CO-OP.HSG.SOCIETY, RAJENDRA NAGAR, DATTAPADA ROAD, OPP. RATIONING OFFICE, BORIVLI (EAST), MUMBAI-400066, MAHARASHTRA, INDIA	
DATE OF REGISTRATION	08/11/2007
TITLE	METAL FITTING FOR FURNITURE
PRIORITY NA	

DESIGN NUMBER	250511
CLASS	24-02
1)HITACHI CHEMICAL COMPANY, LTD., A JAPANESE COMPANY OF 9-2, MARUNOUCHI 1-CHOME, CHIYODA-KU, TOKYO 100-6606, JAPAN (FORMERLY OF 1-1, NISHI-SHINJUKU 2-CHOME, SHINJUKU-KU, TOKYO 163-0449, JAPAN) AND NATIONAL UNIVERSITY CORPORATION TOKYO UNIVERSITY OF AGRICULTURE AND TECHNOLOGY, A JAPANESE INSTITUTION, OF 3-8-1 HARUMI-CHO, FUCHU-SHI, TOKYO 183-8538, JAPAN	
DATE OF REGISTRATION	27/12/2012
TITLE	COMPONENT FOR CELL-COLLECTING CARTRIDGE
PRIORITY NA	

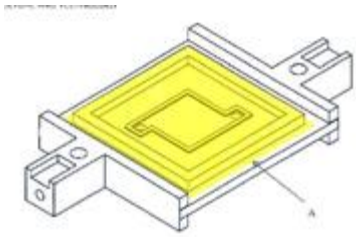

DESIGN NUMBER	267530
CLASS	25-02
1)KANTAFLEX (INDIA) PRIVATE LIMITED., COMPANY REGISTERED UNDER THE LAWS OF INDIA HAVING ITS PLACE OF BUSINESS AT NEW NO. 213, PRAKASAM SALAI, I FLOOR, BROADWAY, CHENNAI 600108, TAMIL NADU, INDIA	
DATE OF REGISTRATION	20/11/2014
TITLE	EXPANSION JOINT BETWEEN STEEL RAILS TO ABSORB MOVEMENT
PRIORITY NA	

DESIGN NUMBER	267771
CLASS	08-03

1)BHARAT HEAVY ELECTRICALS LIMITED, WITH ONE OF ITS REGIONAL OFFICES AT REGIONAL OPERATIONS DIVISION (ROD), PLOT NO. 9/1, DJ BLOCK, 3RD FLOOR, KARUNAMOYEE, SALT LAKE CITY, KOLKATA-700091, HAVING ITS REGISTERED OFFICE AT
BHEL HOUSE SIRI FORT, NEW DELHI-110049, INDIA, AN INDIAN COMPANY.

DATE OF REGISTRATION	27/11/2014
TITLE	CUTTING DIE FOR FUEL CELLS

PRIORITY NA

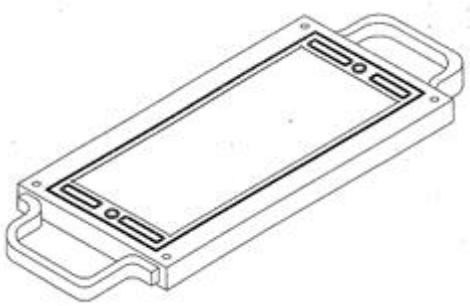

DESIGN NUMBER	268889
CLASS	23-04

1)SATA GMBH & CO. KG, OF
DOMERTALSTRASSE 20, 70806 KORNWESTHEIM, DEUTSCHLAND, GERMANY, GERMAN COMPANY

DATE OF REGISTRATION	15/01/2015
TITLE	AIR FILTER

PRIORITY

PRIORITY NUMBER	DATE	COUNTRY
2014302563327	25/07/2014	CHINA

DESIGN NUMBER	269654
CLASS	20-02

1)TMTE METAL TECH PVT LTD, AN INDIAN COMPANY, INCORPORATED UNDER THE COMPANIES ACT, 1956, HAVING ITS OFFICE AT
25-A/2, NORTH PHASE DAIRY ROAD, SIDCO INDUSTRIAL ESTATE, AMBATTUR, CHENNAI-600098, INDIA

DATE OF REGISTRATION	18/02/2015
TITLE	BACK PANEL OF DISPLAY RACK

PRIORITY NA

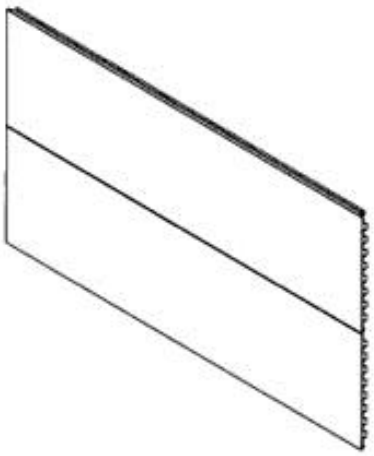

DESIGN NUMBER	263719
CLASS	09-03

1)CONJUN THERMOSETS & INDO-CHEM IS A PROPRIETORSHIP FIRM OF
#504, SECTOR-32-A, CHANDIGARH-160030, INDIA.

DATE OF REGISTRATION	27/06/2014
TITLE	PACKAGING CONTAINER

PRIORITY NA

DESIGN NUMBER	267124
CLASS	12-07

1)LTA CORPORATION C/O GOELET LLC 425 PARK AVENUE NEW YORK, NY 10022 UNITED STATES OF AMERICA
A COMPANY OF UNITED STATES OF AMERICA

DATE OF REGISTRATION	30/10/2014
TITLE	AIRSHIP

PRIORITY

PRIORITY NUMBER	DATE	COUNTRY
29/489,939	05/05/2014	U.S.A.

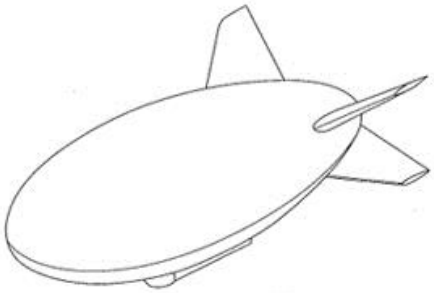

DESIGN NUMBER	267531
CLASS	08-06

1)ASSA OEM AB, A SWEDISH COMPANY OF
P.O. BOX 371, SE-631 05, ESKILSTUNA, SWEDEN

DATE OF REGISTRATION	20/11/2014
TITLE	HANDLE FOR DOOR AND WINDOW

PRIORITY

PRIORITY NUMBER	DATE	COUNTRY
002468231-0001	21/05/2014	OHIM

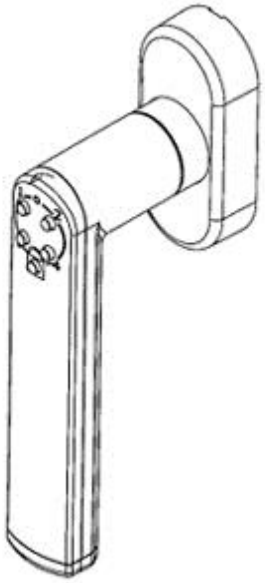

DESIGN NUMBER	267774
CLASS	14-01
1)DREAMCHIP ELECTRONICS PRIVATE LIMITED, AN INDIAN COMPANY OF JAYASHREE, THIRD FLOOR, #13/2, FIRST STREET, JAYALAKSHMIPURAM, NUNGAMBAKKAM, CHENNAI 600034, INDIA	
DATE OF REGISTRATION	27/11/2014
TITLE	E-READER
PRIORITY NA	

DESIGN NUMBER	270590
CLASS	12-11
1)ADVANCE PLASTIC INDUSTRIES, STATION ROAD, DHANDARI KALAN, LUDHIANA (PB.) INDIA, A PARTNERSHIP FIRM	
DATE OF REGISTRATION	26/03/2015
TITLE	PADDLE FOR CYCLES
PRIORITY NA	

DESIGN NUMBER	268890
CLASS	23-04
1)SATA GMBH & CO. KG, OF DOMERTALSTRASSE 20, 70806 KORNWESTHEIM, DEUTSCHLAND, GERMANY, GERMAN COMPANY	
DATE OF REGISTRATION	15/01/2015
TITLE	AIR FILTER

PRIORITY

PRIORITY NUMBER	DATE	COUNTRY
2014302563327	25/07/2014	CHINA

DESIGN NUMBER	267552
CLASS	25-01

1)ROXTEC AB, A SWEDISH JOINT STOCK COMPANY, OF
PO BOX 540 (STREET ADDRESS: ROMBVÄGEN 2) SE-37123 KARLSKRONA, SWEDEN

DATE OF REGISTRATION	21/11/2014
TITLE	SEALING DEVICE FOR CABLES

PRIORITY

PRIORITY NUMBER	DATE	COUNTRY
002485664	18/06/2014	OHIM

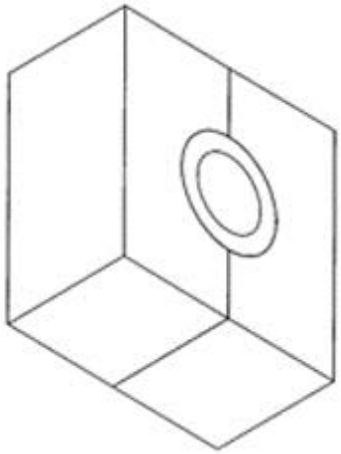

DESIGN NUMBER	267777
CLASS	31-00

1)PREETHI KITCHEN APPLIANCES PRIVATE LIMITED, AN INDIAN COMPANY INCORPORATED UNDER THE PROVISIONS OF THE COMPANIES ACT, 1956, OF
TECHNOPOLIS KNOWLEDGE PARK, MAHAKALI CAVES ROAD, CHAKALA, ANDHERI-EAST, MUMBAI-400093, INDIA

DATE OF REGISTRATION	27/11/2014
TITLE	FOOD PROCESSOR

PRIORITY NA

DESIGN NUMBER	268892
CLASS	23-04

1)SATA GMBH & CO. KG, OF
DOMERTALSTRASSE 20, 70806 KORNWESTHEIM, DEUTSCHLAND, GERMANY, GERMAN COMPANY

DATE OF REGISTRATION	15/01/2015
TITLE	AIR FILTER

PRIORITY

PRIORITY NUMBER	DATE	COUNTRY
2014302563327	25/07/2014	CHINA

DESIGN NUMBER	270925
CLASS	14-03

1)DAIKIN INDUSTRIES LTD., A JAPANESE COMPANY OF THE ADDRESS:
UMEDA CENTER BUILDING, 4-12 NAKAZAKI-NISHI 2-CHOME, KITA-KU, OSAKA-SHI, OSAKA-FU, JAPAN

DATE OF REGISTRATION	01/04/2015
TITLE	REMOTE CONTROLLER FOR AIR CONDITIONER

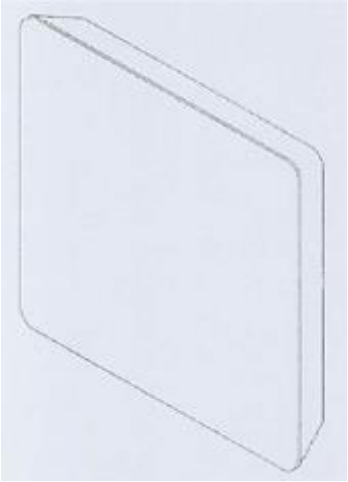

PRIORITY

PRIORITY NUMBER	DATE	COUNTRY
2014-025146	11/11/2014	JAPAN

DESIGN NUMBER	251412
CLASS	26-01

1)ABHIJIT BANSOD, SOLE PROPRIETOR, CARRYING ON BUSINESS AS
STUDIO ABD AT LAKEVIEW FARM WHITEFIELD, OLD AIRPORT ROAD, RAMAGONDANAHALLI, BANGALORE, KARNATAKA, INDIA-560066

DATE OF REGISTRATION	05/02/2013
TITLE	CANDLE HOLDER

PRIORITY NA

DESIGN NUMBER	267553
CLASS	07-02

1)VAIBHAV MALHOTRA, VANSH MALHOTRA, AMARPALI MALHOTRA AND RAJIV MALHOTRA (INDIAN NATIONALS) TRADING AS: STUFA MANUFACTURING ENTERPRISE, NATIONALITY: INDIAN PARTNERSHIP CONCERN, ADDRESS-
H-14, UDYOG NAGAR INDUSTRIAL AREA ROHTAK ROAD, NEW DELHI-41

DATE OF REGISTRATION	21/11/2014
TITLE	GAS BURNER

PRIORITY NA

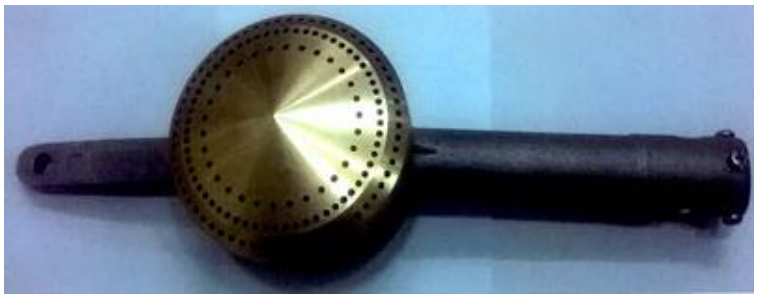

DESIGN NUMBER	268596
CLASS	07-05
1)KONINKLIJKE PHILIPS N.V., A COMPANY ORGANIZED AND EXISTING UNDER THE LAWS OF THE KINGDOM OF THE NETHERLANDS, RESIDING AT EINDHOVEN, WHOSE POST-OFFICE ADDRESS IS HIGH TECH CAMPUS 5, 5656 AE EINDHOVEN, THE NETHERLANDS	
DATE OF REGISTRATION	01/01/2015
TITLE	IRON WITH STEAM GENERATOR

PRIORITY

PRIORITY NUMBER	DATE	COUNTRY
002494781-0001	02/07/2014	OHIM

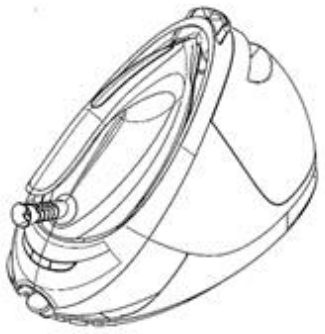

DESIGN NUMBER	268893
CLASS	23-04
1)SATA GMBH & CO. KG, OF DOMERTALSTRASSE 20, 70806 KORNWESTHEIM, DEUTSCHLAND, GERMANY, GERMAN COMPANY	
DATE OF REGISTRATION	15/01/2015
TITLE	AIR FILTER

PRIORITY

PRIORITY NUMBER	DATE	COUNTRY
2014302563327	25/07/2014	CHINA

DESIGN NUMBER	270942
CLASS	18-02
1)MEDITEK INTERNATIONAL PRIVATE LIMITED (A COMPANY INCORPORATED UNDER THE INDIAN COMPANIES ACT 1956), C-43 DSIDC PACKAGING COMPLEX, KIRTI NAGAR, NEW DELHI-110015 (INDIA)	
DATE OF REGISTRATION	06/04/2015
TITLE	PAD PRINTING MACHINE

PRIORITY NA

DESIGN NUMBER	264331
CLASS	26-05

1)GE INDIA INDUSTRIAL PVT LTD,
PLOT NO. 42/1 & 45/14, ELECTRONIC CITY PHASE II, BANGALORE-560100, NATIONALITY: INDIA

DATE OF REGISTRATION	28/07/2014
TITLE	LIGHTING FIXTURE

PRIORITY NA

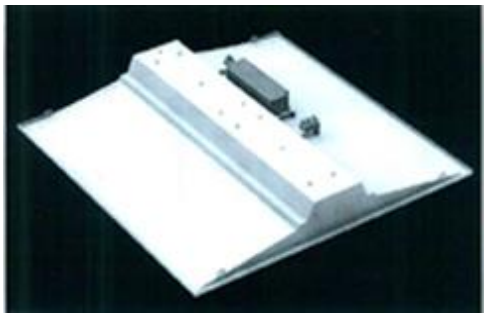

DESIGN NUMBER	268599
CLASS	28-03

1)KONINKLIJKE PHILIPS N.V., A COMPANY ORGANIZED AND EXISTING UNDER THE LAWS OF THE KINGDOM OF THE NETHERLANDS, RESIDING AT EINDHOVEN, WHOSE POST-OFFICE ADDRESS IS
HIGH TECH CAMPUS 5, 5656 AE EINDHOVEN, THE NETHERLANDS

DATE OF REGISTRATION	01/01/2015
TITLE	COMB FOR GROOMING APPARATUS

PRIORITY

PRIORITY NUMBER	DATE	COUNTRY
002496497-0003	04/07/2014	OHIM

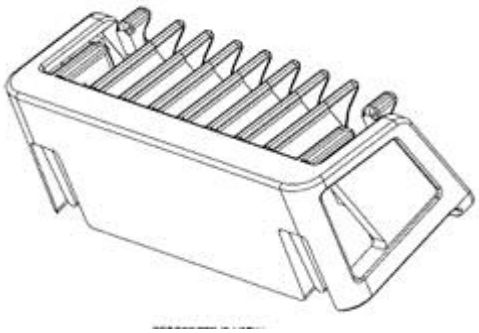

DESIGN NUMBER	269850
CLASS	14-03

1)SAMSUNG ELECTRONICS CO., LTD.
129, SAMSUNG-RO, YEONGTONG-GU, SUWON-SI, GYEONGGI-DO, 443-742, REPUBLIC OF KOREA, A COMPANY OF REPUBLIC OF KOREA

DATE OF REGISTRATION	25/02/2015
TITLE	MOBILE PHONE

PRIORITY

PRIORITY NUMBER	DATE	COUNTRY
30-2014-0048508	08/10/2014	REPUBLIC OF KOREA

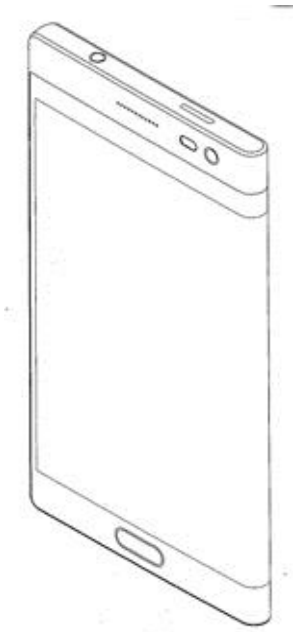

DESIGN NUMBER	268906
CLASS	15-03

1)STANDARD CORPORATION INDIA LIMITED, OF
STANDARD CHOWK, BARNALA, PUNJUB, INDIA, A COMPANY INCORPORATED UNDER THE COMPANIES ACT, 1956, OF THE ABOVE ADDRESS

DATE OF REGISTRATION	16/01/2015
TITLE	TRACTOR DRIVEN COMBINE HARVESTER

PRIORITY NA

DESIGN NUMBER	269696
CLASS	14-01

1)SAMSUNG ELECTRONICS CO., LTD.
129, SAMSUNG-RO, YEONGTONG-GU, SUWON-SI, GYEONGGI-DO, 443-742, REPUBLIC OF KOREA, A COMPANY OF REPUBLIC OF KOREA

DATE OF REGISTRATION	19/02/2015
TITLE	CAP FOR HEADSET

PRIORITY

PRIORITY NUMBER	DATE	COUNTRY
30-2014-0042146	28/08/2014	REPUBLIC OF KOREA

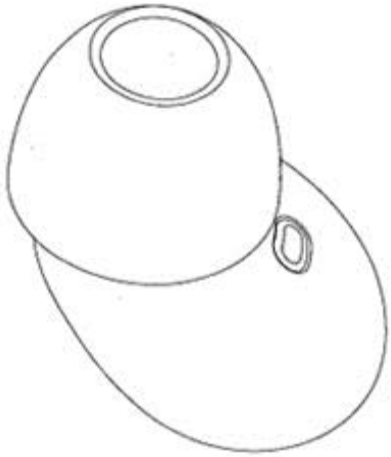

DESIGN NUMBER	268166
CLASS	24-02

1)NUELLE, INC.,
2570 W. EL CAMINO, REAL, SUITE 310, MOUNTAIN VIEW, CA 94040 UNITED STATES OF AMERICA, NATIONALITY: U.S.A.

DATE OF REGISTRATION	12/12/2014
TITLE	MASSAGE DEVICE

PRIORITY

PRIORITY NUMBER	DATE	COUNTRY
29/493,989	16/06/2014	U.S.A.

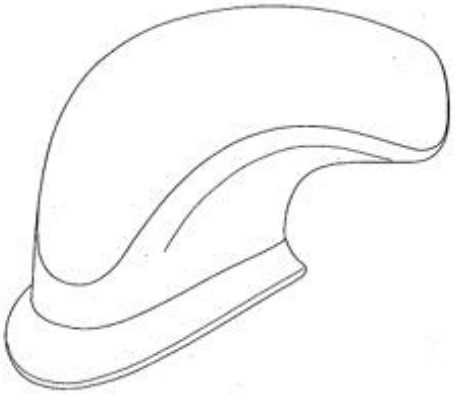

DESIGN NUMBER	270968
CLASS	05-05
1)MR. SIDDHARATH BINDRA (INDIAN INHABITANT) S/O LATE SHRI SATISH CHANDER BINDRA, R/O BINDRA FARM, F-4 ANSAL VILLA, NEAR CSKM SCHOOL, SATBARI, NEW DELHI-110074	
DATE OF REGISTRATION	06/04/2015
TITLE	TEXTILE FABRIC
PRIORITY NA	

DESIGN NUMBER	269301
CLASS	15-02
1)S.V.A RIKKON LUBES PVT LTD, A COMPANY INCORPORATED UNDER THE INDIAN COMPANIES ACT AT NO. 203, NAGESWARA RAO ROAD, 2ND EXTENSION, ATHIPET, AMBATTUR, CHENNAI-600058, INDIA, INDIAN-NATIONAL OF THE ABOVE ADDRESS	
DATE OF REGISTRATION	04/02/2015
TITLE	PUMPS FOR DISPENSING LUBRICANTS
PRIORITY NA	

DESIGN NUMBER	264950
CLASS	15-05
1)LG ELECTRONICS INC. OF 20, YEOUIDO-DONG, YEONGDEUNGPO-GU, SEOUL 150- 721, REPUBLIC OF KOREA	
DATE OF REGISTRATION	21/08/2014
TITLE	DECOR, HANDLE
PRIORITY NA	

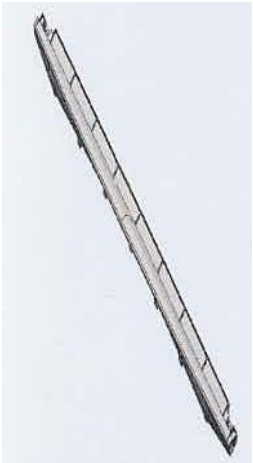

DESIGN NUMBER	266664
CLASS	24-02
1)STEMPEUTICS RESEARCH PRIVAE LIMITED, A COMPANY REGISTERED UNDER THE COMPANIES ACT 1956 HAVING ITS REGISTERED OFFICE AT AKSHAY TECH PARK, 72 & 73, 2ND FLOOR, EPIP ZONE, PHASE 1-AREA WHITEFIELD, BANGALORE-560066, KARNATAKA, INDIA;	
DATE OF REGISTRATION	10/10/2014
TITLE	CONTAINER FOR STORING BIOLOGICAL SAMPLES
PRIORITY NA	

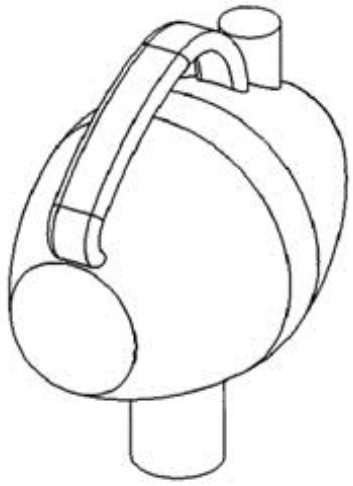

DESIGN NUMBER	267287
CLASS	14-03
1)M/S GM MODULAR PVT. LTD., (A COMPANY INCORPORATED UNDER INDIAN COMPANIES ACT), 14/15, BOKADIA IND. ESTATE, SATIVALI ROAD, VASAI (EAST)-401208, DISTRICT-THANE, MAHARASHTRA (INDIA)	
DATE OF REGISTRATION	10/11/2014
TITLE	RADIO PLAYER
PRIORITY NA	

DESIGN NUMBER	268469
CLASS	12-11
1)SHANDONG XIZHONG ELECTRONIC TECHNOLOGY CO., LTD. WEST SIDE, XIN XING ROAD, ZHANG FAN STREET OFFICE, HIGH-TECH ZONES, ZAOZHUANG CITY, SHANDONG PROVINCE 277800, CHINA, NATIONALITY-CHINESE, LEGAL STATUS: COMPANY INCORPORATED IN CHINA	
DATE OF REGISTRATION	29/12/2014
TITLE	ELECTRIC TRICYCLE

PRIORITY

PRIORITY NUMBER	DATE	COUNTRY
201430409077.5	25/10/2014	CHINA

DESIGN NUMBER	268604
CLASS	02-04

1)RELAXO FOOTWEARS LTD., 316-319, ALLIED HOUSE, INDERLOK CHOWK, OLD ROHTAK ROAD, DELHI-110035, INDIA,
AN INDIAN COMPANY REGISTERED UNDER INDIAN COMPANIES ACT, 1956, OF THE ABOVE ADDRESS

DATE OF REGISTRATION	01/01/2015
TITLE	FOOTWEAR

PRIORITY NA

DESIGN NUMBER	269853
CLASS	14-03

1)SAMSUNG ELECTRONICS CO., LTD.
129, SAMSUNG-RO, YEONGTONG-GU, SUWON-SI, GYEONGGI-DO, 443-742, REPUBLIC OF KOREA, A COMPANY OF REPUBLIC OF KOREA

DATE OF REGISTRATION	25/02/2015
TITLE	MOBILE PHONE

PRIORITY

PRIORITY NUMBER	DATE	COUNTRY
30-2014-0049463	15/10/2014	REPUBLIC OF KOREA

DESIGN NUMBER	269697
CLASS	14-03

1)LG ELECTRONICS INC.
128, YEOUI-DAERO, YEONGDEUNGPO - GU, SEOUL 150 - 721, REPUBLIC OF KOREA A CORPORATION INCORPORATED UNDER THE LAWS OF THE REPUBLIC OF KOREA

DATE OF REGISTRATION	19/02/2015
TITLE	MOBILE PHONE

PRIORITY

PRIORITY NUMBER	DATE	COUNTRY
30-2014-0041126	22/08/2014	REPUBLIC OF KOREA

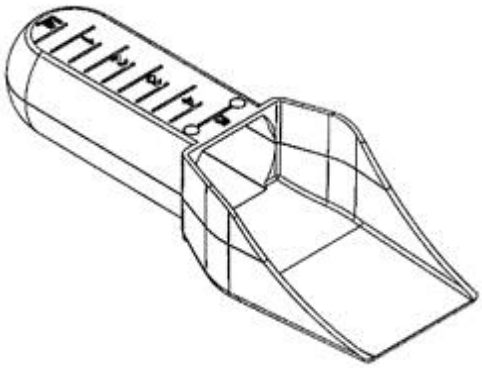

DESIGN NUMBER	270969
CLASS	05-05

1)MR. SIDDHARATH BINDRA (INDIAN INHABITANT) S/O LATE SHRI SATISH CHANDER BINDRA,
R/O BINDRA FARM, F-4 ANSAL VILLA, NEAR CSKM SCHOOL, SATBARI, NEW DELHI-110074

DATE OF REGISTRATION	06/04/2015
TITLE	TEXTILE FABRIC

PRIORITY NA

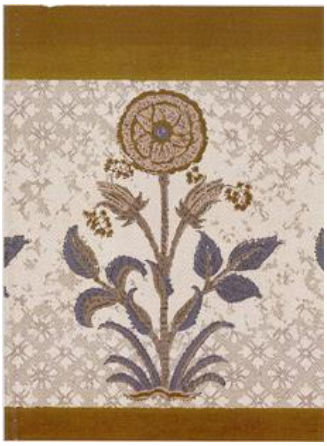

DESIGN NUMBER	269309
CLASS	12-08

1)AUDI AG, A JOINT STOCK COMPANY ESTABLISHED UNDER GERMAN LAW OF
AUTO-UNION-STR. 1, D-85045 INGOLSTADT, GERMANY

DATE OF REGISTRATION	05/02/2015
TITLE	MOTOR VEHICLE

PRIORITY

PRIORITY NUMBER	DATE	COUNTRY
002515437-0001	06/08/2014	OHIM

DESIGN NUMBER	264954
CLASS	15-05

1)LG ELECTRONICS INC. OF
20, YEOUIDO-DONG, YEONGDEUNGPO-GU, SEOUL 150- 721, REPUBLIC OF KOREA

DATE OF REGISTRATION	21/08/2014
TITLE	DECOR, LID

PRIORITY NA

DESIGN NUMBER	267802
CLASS	12-15

1)BRIDGESTONE CORPORATION, A JAPANESE COMPANY ORGANIZED AND EXISTING UNDER THE LAWS OF JAPAN, MANUFACTURES AND MERCHANTS, OF
1-1, KYOBASHI 3-CHOME, CHUO-KU, TOKYO 104-8340, JAPAN

DATE OF REGISTRATION	28/11/2014
TITLE	TIRE

PRIORITY

PRIORITY NUMBER	DATE	COUNTRY
JP2014-011970	03/06/2014	JAPAN

DESIGN NUMBER	268653
CLASS	13-99

1)WORLD PANEL, INC., A CORPORATION ORGANIZED AND EXISTING UNDER THE LAWS OF THE STATE OF DELAWARE, UNITED STATES OF AMERICA, HAVING A PLACE OF BUSINESS AT
300 CENTER DRIVE, G-278, BOULDER, CO 80027, UNITED STATES OF AMERICA

DATE OF REGISTRATION	05/01/2015
TITLE	MOBILE SOLAR PANEL CHARGER

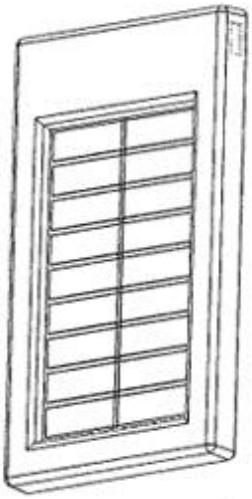

PRIORITY

PRIORITY NUMBER	DATE	COUNTRY
29/495,852	04/07/2014	U.S.A.

DESIGN NUMBER	268909
CLASS	12-16

1)TATA MOTORS LIMITED, AN INDIAN COMPANY OF
BOMBAY HOUSE, 24 HOMI MODY STREET, HUTATMA CHOWK, MUMBAI 400001, MAHARASHTRA, INDIA

DATE OF REGISTRATION	16/01/2015
TITLE	WIRING HARNESS TERMINAL FOR ALTERNATORS IN AUTOMOBILES

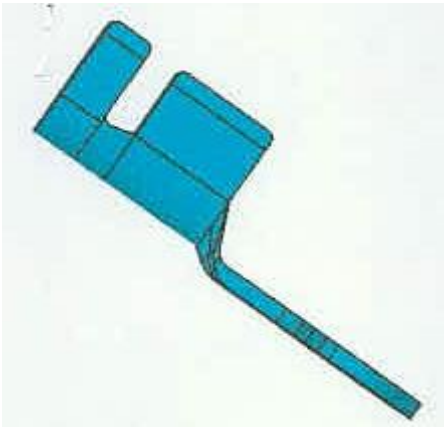

PRIORITY NA

DESIGN NUMBER	254936
CLASS	20-02
1)IKM NETWORK PVT. LTD., A INDIAN PRIVATE LIMITED COMPANY, OF 6/3 BALARAM BOSE 1ST LANE, KOLKATA-700020, STATE OF WEST BENGAL, INDIA.	
DATE OF REGISTRATION	02/07/2013
TITLE	MOBILE FOOD PARLOUR
PRIORITY NA	

DESIGN NUMBER	270971
CLASS	05-05
1)MR. SIDDHARATH BINDRA (INDIAN INHABITANT) S/O LATE SHRI SATISH CHANDER BINDRA, R/O BINDRA FARM, F-4 ANSAL VILLA, NEAR CSKM SCHOOL, SATBARI, NEW DELHI-110074	
DATE OF REGISTRATION	06/04/2015
TITLE	TEXTILE FABRIC
PRIORITY NA	

DESIGN NUMBER	265600
CLASS	26-05
1)FOREVER BULB, LLC, OF 22680 SOUTH SILVER LAKE ROAD, GRANTSBURG, WI 54840, U.S., A U.S. COMPANY	
DATE OF REGISTRATION	10/09/2014
TITLE	LED BULB

PRIORITY

PRIORITY NUMBER	DATE	COUNTRY
29/484469	10/03/2014	U.S.A.

DESIGN NUMBER	264957
CLASS	15-05
1)LG ELECTRONICS INC. OF 20, YEOUIDO-DONG, YEONGDEUNGPO-GU, SEOUL 150- 721, REPUBLIC OF KOREA	
DATE OF REGISTRATION	21/08/2014
TITLE	DECOR, PANEL
PRIORITY NA	

DESIGN NUMBER	267791
CLASS	26-06
1)HONDA MOTOR CO., LTD., A JAPANESE CORPORATION, OF 1-1, MINAMI-AOYAMA 2-CHOME, MINATO-KU, TOKYO, 107-8556 JAPAN	
DATE OF REGISTRATION	28/11/2014
TITLE	TAIL LAMP CASE FOR MOTORCYLE

PRIORITY

PRIORITY NUMBER	DATE	COUNTRY
2014-012044	04/06/2014	JAPAN

DESIGN NUMBER	268597
CLASS	07-05
1)KONINKLIJKE PHILIPS N.V., A COMPANY ORGANIZED AND EXISTING UNDER THE LAWS OF THE KINGDOM OF THE NETHERLANDS, RESIDING AT EINDHOVEN, WHOSE POST-OFFICE ADDRESS IS HIGH TECH CAMPUS 5, 5656 AE EINDHOVEN, THE NETHERLANDS	
DATE OF REGISTRATION	01/01/2015
TITLE	STEAM GENERATOR FOR IRON

PRIORITY

PRIORITY NUMBER	DATE	COUNTRY
002494781-0002	02/07/2014	OHIM

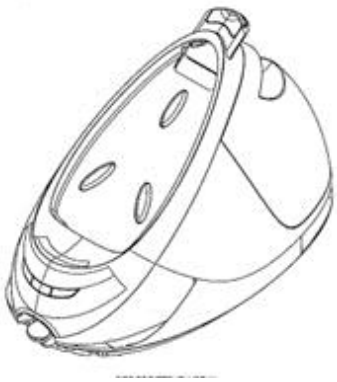

DESIGN NUMBER	268894
CLASS	23-04

1)SATA GMBH & CO. KG, OF
DOMERTALSTRASSE 20, 70806 KORNWESTHEIM, DEUTSCHLAND, GERMANY, GERMAN COMPANY

DATE OF REGISTRATION	15/01/2015
TITLE	AIR FILTER

PRIORITY

PRIORITY NUMBER	DATE	COUNTRY
2014302563327	25/07/2014	CHINA

DESIGN NUMBER	269669
CLASS	13-01

1)SIEMENS AKTIENGESELLSCHAFT, OF
WITTELSBACHERPLATZ 2, 80333 MUNCHEN, GERMANY, A GERMAN COMPANY.

DATE OF REGISTRATION	18/02/2015
TITLE	ELECTRIC MOTOR

PRIORITY

PRIORITY NUMBER	DATE	COUNTRY
201430328594.X	05/09/2014	CHINA

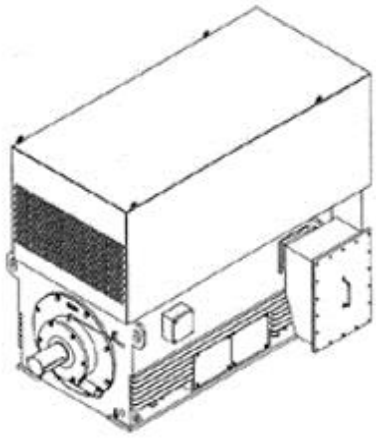

DESIGN NUMBER	270944
CLASS	18-02

1)MEDITEK INTERNATIONAL PRIVATE LIMITED (A COMPANY INCORPORATED UNDER THE INDIAN COMPANIES ACT 1956),
C-43 DSIDC PACKAGING COMPLEX, KIRTI NAGAR, NEW DELHI-110015 (INDIA)

DATE OF REGISTRATION	06/04/2015
TITLE	PAD PRINTING MACHINE

PRIORITY NA

DESIGN NUMBER	264948
CLASS	15-05
1)LG ELECTRONICS INC. OF 20, YEOUIDO-DONG, YEONGDEUNGPO-GU, SEOUL 150- 721, REPUBLIC OF KOREA	
DATE OF REGISTRATION	21/08/2014
TITLE	LID ASSEMBLY
PRIORITY NA	

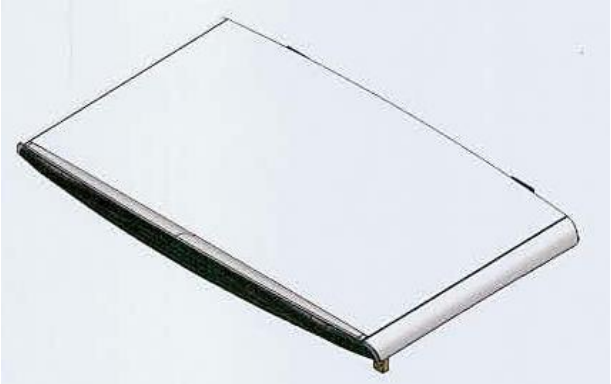

DESIGN NUMBER	267813
CLASS	31-00
1)CARLSBERG BREWERIES A/S, OF NY CARLSBERGVEJ 100, DK-1760 COPENHAGEN V, DENMARK	
DATE OF REGISTRATION	28/11/2014
TITLE	DISPENSING APPARATUS FOR DRINKS AND BEVERAGES

PRIORITY

PRIORITY NUMBER	DATE	COUNTRY
DA 214 00055	30/05/2014	DENMARK

DESIGN NUMBER	268664
CLASS	09-05
1)THE GILLETTE COMPANY, A COMPANY INCORPORATED UNDER THE LAWS OF UNITED STATES OF AMERICA HAVING ITS OFFICE AT IP/LEGAL PATENT DEPARTMENT - 3E, ONE GILLETTE PARK, BOSTON, MASSACHUSETTS 02127, UNITED STATES OF AMERICA	
DATE OF REGISTRATION	06/01/2015
TITLE	SHAVE PREPARATION CONTAINER

PRIORITY

PRIORITY NUMBER	DATE	COUNTRY
29/495,903	07/07/2014	U.S.A.

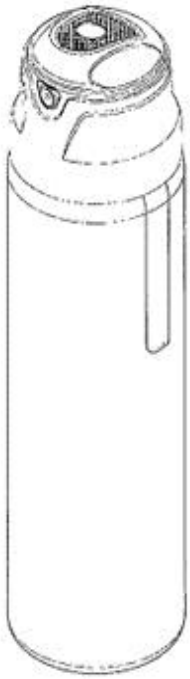

DESIGN NUMBER	270973
CLASS	05-05
1)MR. SIDDHARATH BINDRA (INDIAN INHABITANT) S/O LATE SHRI SATISH CHANDER BINDRA, R/O BINDRA FARM, F-4 ANSAL VILLA, NEAR CSKM SCHOOL, SATBARI, NEW DELHI-110074	
DATE OF REGISTRATION	06/04/2015
TITLE	TEXTILE FABRIC
PRIORITY NA	

DESIGN NUMBER	269340
CLASS	08-06
1)SUMANGAL TECHNOCAST PVT. LTD. (A COMPANY INCORPORATED UNDER THE COMPANIES ACT, 1956) HAVING ITS PRINCIPAL PLACE OF BUSINESS AT ADDRESS: AIMS INDUSTRIAL PARK, SURVEY NO. 195/P 66, 80 FEET ROAD, BEHIND GOLDEN IND. AREA, KOTHARIYA, RAJKOT, GUJARAT, INDIA	
DATE OF REGISTRATION	05/02/2015
TITLE	HANDLE
PRIORITY NA	

DESIGN NUMBER	264960
CLASS	15-05
1)LG ELECTRONICS INC. OF 20, YEOUIDO-DONG, YEONGDEUNGPO-GU, SEOUL 150- 721, REPUBLIC OF KOREA	
DATE OF REGISTRATION	21/08/2014
TITLE	PANEL ASSEMBLY, FRONT
PRIORITY NA	

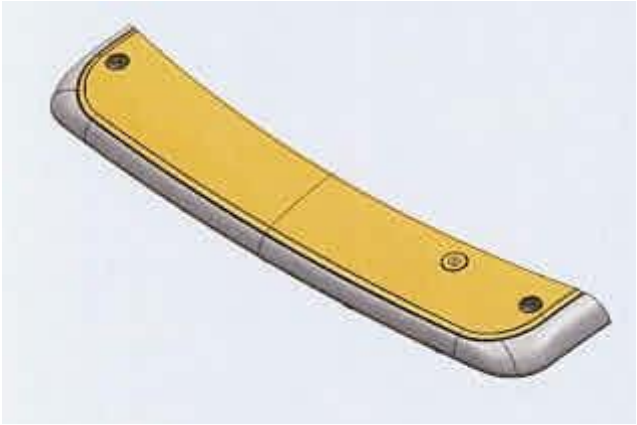

DESIGN NUMBER	202300
CLASS	09-01
1)AMAR ENTERPRISE, UNIT NO-12, SHRAMJIVI UDYOG BHAVAN, RAMCHANDRA LANE, EXTN, MALAD(WEST), MUMBAI-400064, MAHARASHTRA, INDIA	
DATE OF REGISTRATION	01/12/2005
TITLE	TIFFIN BOX
PRIORITY NA	

DESIGN NUMBER	213364
CLASS	08-09
1)POOJA HARDWARE PRIVATE LIMITED., 24/170, KULDEEP CO-OP.HSG.SOCIETY, RAJENDRA NAGAR, DATTAPADA ROAD, OPP. RATIONING OFFICE, BORIVLI (EAST), MUMBAI-400 066, MAHARASHTRA, INDIA	
DATE OF REGISTRATION	08/11/2007
TITLE	METAL FITTING FOR FURNITURE
PRIORITY NA	

DESIGN NUMBER	267389
CLASS	24-01
1)CARL ZEISS MEDITEC AG, A CORPORATION ORGANIZED AND EXISTING UNDER THE LAWS OF GERMANY, OF GÖSCHWITZER STRASSE 51-52, 07745 JENA, GERMANY	
DATE OF REGISTRATION	14/11/2014
TITLE	DEVICE FOR EYE DIAGNOSIS

PRIORITY

PRIORITY NUMBER	DATE	COUNTRY
402014201482-0003	15/05/2014	GERMANY

DESIGN NUMBER	267639
CLASS	26-05
1)HUBBELL INCORPORATED, 40 WATERVIEW DRIVE, SHELTON, CONNECTICUT 06484 USA A CORPORATION OF THE STATE OF CONNECTICUT	
DATE OF REGISTRATION	21/11/2014
TITLE	WALL MOUNT LUMINAIRE

PRIORITY

PRIORITY NUMBER	DATE	COUNTRY
29/491,743	23/05/2014	U.S.A.

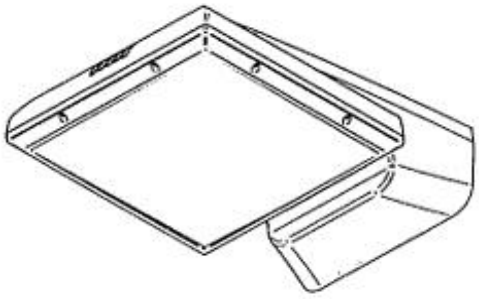

DESIGN NUMBER	268754
CLASS	06-01
1)SHARAN GOYAL, 42, SARAS BAUG, OPPOSITE TELECOM FACTORY, DEONAR, MUMBAI-400088, INDIA, AN INDIAN NATIONAL	
DATE OF REGISTRATION	09/01/2015
TITLE	BEAN BAG FOR SITTING
PRIORITY NA	

DESIGN NUMBER	246139
CLASS	13-03
1)MR. SAURAV AGARWAL (AN INDIAN NATIONAL), S/O SHRI PRABHU DAYAL AGARWAL, A-62, MAY FAIR GARDENS, NEW DELHI-110016, (INDIA)	
DATE OF REGISTRATION	25/06/2012
TITLE	SWITCH PLATE
PRIORITY NA	

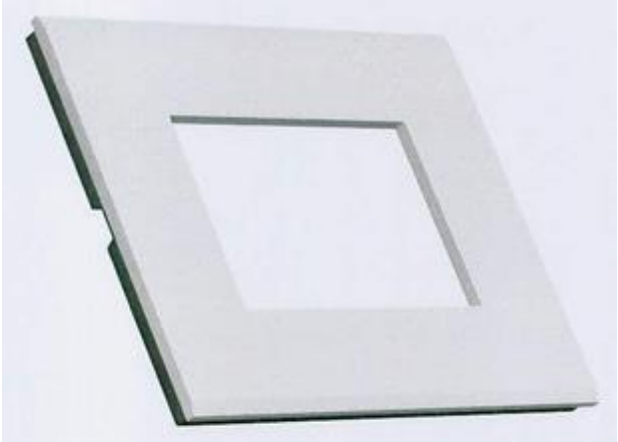

DESIGN NUMBER	254271
CLASS	07-01
1)BONJOUR INTERNATIONAL, A INDIAN PARTNERSHIP FIRM OF 15 UA JAWAHAR NAGAR, DELHI-110007, INDIA, WHOSE PARTNERS ARE (1) RAMAN GUPTA OF 385, DEEPALI, PITAMPURA, DELHI-110034 (2) RAJESH KUMAR GUPTA OF 384, DEEPALI, PITAMPURA, DELHI-110034 AND (3) REENA GUPTA OF 384, DEEPALI, PITAMPURA, DELHI-110034 ALL INDIAN NATIONALS	
DATE OF REGISTRATION	05/06/2013
TITLE	FLASK
PRIORITY NA	

DESIGN NUMBER	264651
CLASS	08-06
1)(1) PRADIPBHAI K. MEHTA, (2) AMITBHAI P. MEHTA AND (3) CHETANBHAI P. MEHTA ALL INDIAN NATIONAL PARTNERS OF KOMAL MANUFACTURING CO. AN INDIAN PARTNERSHIP FIRM HAVING ITS PRINCIPAL PLACE OF BUSINESS AT PLOT NO. 27, SURVEY NO. 224, SOMNATH IND. 5, RAJKOT GONDAL BYPASS ROAD, VILLAGE: KOTHARIYA, SOLVENT, RAJKOT, GUJARAT-INDIA	
DATE OF REGISTRATION	11/08/2014
TITLE	HANDLE
PRIORITY NA	

DESIGN NUMBER	266143
CLASS	12-11
1)EIDER MOTORS LIMITED, WHOSE ADDRESS 8-2-293/82/A/796-B, 4TH FLOOR, ROAD #36, JUBILEE HILLS, HYDERABAD-500033, TELANGANA, INDIA, AND WHOSE NATIONALITY IS INDIA	
DATE OF REGISTRATION	29/09/2014
TITLE	MOTOR CYCLE
PRIORITY NA	

DESIGN NUMBER	213366	
CLASS	08-09	
1)POOJA HARDWARE PRIVATE LIMITED., 24/170, KULDEEP CO-OP.HSG.SOCIETY, RAJENDRA NAGAR, DATTAPADA ROAD, OPP. RATIONING OFFICE, BORIVLI (EAST), MUMBAI-400066, MAHARASHTRA, INDIA		
DATE OF REGISTRATION	08/11/2007	
TITLE	METAL FITTING FOR FURNITURE	
PRIORITY NA		

DESIGN NUMBER	266562	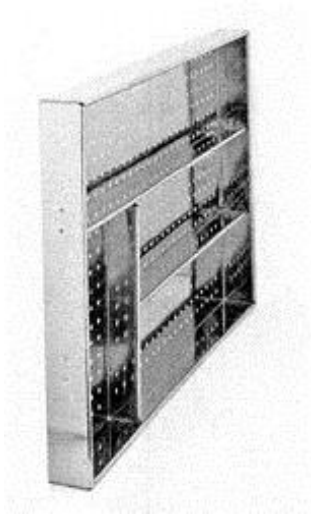
CLASS	09-04	
1)PATOLIA LALJI KHIMJIBHAI, NATIONALITY INDIAN, ADDRESS AT 7, VISHVAKETU TENAMENT, OPP. BAJRANG ASHRAM, THAKKARBAPA NAGAR, AHMEDABAD 382350, GUJARAT, INDIA		
DATE OF REGISTRATION	09/10/2014	
TITLE	KITCHEN BASKET	
PRIORITY NA		

DESIGN NUMBER	267394	
CLASS	26-04	
1)M/S GM MODULAR PVT. LTD., (A COMPANY INCORPORATED UNDER INDIAN COMPANIES ACT), 14/15, BOKADIA IND. ESTATE, SATIVALI ROAD, VASAI (EAST)-401208, DISTRICT-THANE, MAHARASHTRA (INDIA)		
DATE OF REGISTRATION	14/11/2014	
TITLE	DOWN LIGHT	
PRIORITY NA		

DESIGN NUMBER	267659
CLASS	09-01
1)BHARAT PET LIMITED, H-38, UDYOG NAGAR, OPPOSITE PEERAGARHI, DELHI-110041, INDIA, NATIONALITY-INDIA	
DATE OF REGISTRATION	24/11/2014
TITLE	BOTTLE
PRIORITY NA	

DESIGN NUMBER	268760
CLASS	28-03
1)KONINKLIJKE PHILIPS N.V., A COMPANY ORGANIZED AND EXISTING UNDER THE LAWS OF THE KINGDOM OF THE NETHERLANDS, RESIDING AT EINDHOVEN, WHOSE POST-OFFICE ADDRESS IS HIGH TECH CAMPUS 5, 5656 AE EINDHOVEN, THE NETHERLANDS	
DATE OF REGISTRATION	09/01/2015
TITLE	SHAVING HEAD UNIT

PRIORITY

PRIORITY NUMBER	DATE	COUNTRY
002500785-0002	11/07/2014	OHIM

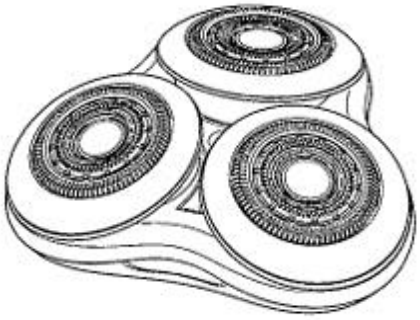

DESIGN NUMBER	269391
CLASS	09-01
1)KEVAL GOSAR INDIAN NATIONALS, PROPRIETOR FIRM AT 13/A, SAPTARSHI BUILDING, DAFTARY ROAD, ABOVE MILAN HOTEL, MALAD (EAST), MUMBAI-400097 (INDIA) OF ABOVE ADDRESS	
DATE OF REGISTRATION	09/02/2015
TITLE	WATER BOTTLE
PRIORITY NA	

DESIGN NUMBER	213365
CLASS	08-09
1)POOJA HARDWARE PRIVATE LIMITED., 24/170, KULDEEP CO-OP.HSG.SOCIETY, RAJENDRA NAGAR, DATTAPADA ROAD, OPP. RATIONING OFFICE, BORIVLI (EAST), MUMBAI-400066, MAHARASHTRA, INDIA	
DATE OF REGISTRATION	08/11/2007
TITLE	METAL FITTING FOR FURNITURE
PRIORITY NA	

DESIGN NUMBER	266486
CLASS	12-10
1)HANFI AUTOCRAFTS IS A PARTNERSHIP FIRM REGISTERED UNDER THE PARTNERSHIP ACT 1932 BETWEEN 1) AMIN ABDUL PALASRA 2) ALTAF ABDUL PALASRA WHOSE OFFICE IS AT CHHAPI-PIROJPURA ROAD, POST-MAHI, TALUKA-VADGAM BANASKANTHA NORTH GUJARAT-360001, INDIA.	
DATE OF REGISTRATION	09/10/2014
TITLE	LOAD BODY ASSEMBLY OF COMMERCIAL VEHICLE
PRIORITY NA	

DESIGN NUMBER	267390
CLASS	24-01
1)CARL ZEISS MEDITEC AG, A CORPORATION ORGANIZED AND EXISTING UNDER THE LAWS OF GERMANY, OF GÖSCHWITZER STRASSE 51-52, 07745 JENA, GERMANY	
DATE OF REGISTRATION	14/11/2014
TITLE	STAND FOR EYE DIAGNOSIS DEVICE

PRIORITY

PRIORITY NUMBER	DATE	COUNTRY
402014201482-0003	15/05/2014	GERMANY

DESIGN NUMBER	267640
CLASS	26-03

1)HUBBELL INCORPORATED,
40 WATERVIEW DRIVE, SHELTON, CONNECTICUT 06484 USA A CORPORATION OF THE STATE OF CONNECTICUT

DATE OF REGISTRATION	21/11/2014
TITLE	FLOODLIGHT LUMINAIRE

PRIORITY

PRIORITY NUMBER	DATE	COUNTRY
29/491,750	23/05/2014	U.S.A.

DESIGN NUMBER	268755
CLASS	06-01

1)SHARAN GOYAL,
42, SARAS BAUG, OPPOSITE TELECOM FACTORY, DEONAR, MUMBAI-400088, INDIA, AN INDIAN NATIONAL

DATE OF REGISTRATION	09/01/2015
TITLE	BEAN BAG FOR SITTING

PRIORITY NA

DESIGN NUMBER	264795
CLASS	25-01

1)APPLE ROLLING MILLS LTD HAVING THEIR PRINCIPAL PLACE OF BUSINESS AT
VILL, ULIVEERANAPALLI, THALI ROAD, HOSUR, DISTRICT-KRISHNAGIRI, TAMILNADU-635114, AN INDIAN NATIONAL

DATE OF REGISTRATION	14/08/2014
TITLE	TMT ROD

PRIORITY NA

DESIGN NUMBER	269389
CLASS	23-04
1)SANJAY GUPTA, INDIAN NATIONAL, OF 37/5, RAJPUR ROAD, CIVIL LINES, DELHI 110054, INDIA	
DATE OF REGISTRATION	09/02/2015
TITLE	DEHUMIDIFIER
PRIORITY NA	

DESIGN NUMBER	266735
CLASS	23-02
1)AS IP HOLDCO, LLC, AN AMERICAN COMPANY, OF THE ADDRESS: ONE CENTENNIAL AVENUE PISCATAWAY, NEW JERSEY 08854, UNITED STATES OF AMERICA	
DATE OF REGISTRATION	16/10/2014
TITLE	NESTABLE LATRINE PAN
PRIORITY NA	

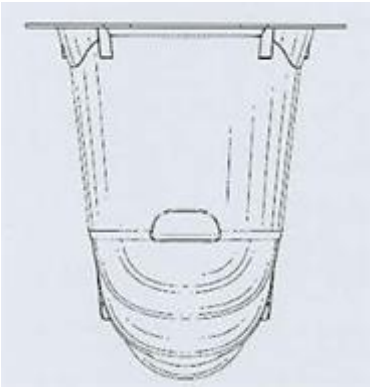

DESIGN NUMBER	268654
CLASS	13-99
1)WORLD PANEL, INC., A CORPORATION ORGANIZED AND EXISTING UNDER THE LAWS OF THE STATE OF DELAWARE, UNITED STATES OF AMERICA, HAVING A PLACE OF BUSINESS AT 300 CENTER DRIVE, G-278, BOULDER, CO 80027, UNITED STATES OF AMERICA	
DATE OF REGISTRATION	05/01/2015
TITLE	POCKET SOLAR PANEL CHARGER

PRIORITY

PRIORITY NUMBER	DATE	COUNTRY
29/513,141	04/07/2014	U.S.A.

DESIGN NUMBER	270972
CLASS	05-05
1)MR. SIDDHARATH BINDRA (INDIAN INHABITANT) S/O LATE SHRI SATISH CHANDER BINDRA, R/O BINDRA FARM, F-4 ANSAL VILLA, NEAR CSKM SCHOOL, SATBARI, NEW DELHI-110074	
DATE OF REGISTRATION	06/04/2015
TITLE	TEXTILE FABRIC
PRIORITY NA	

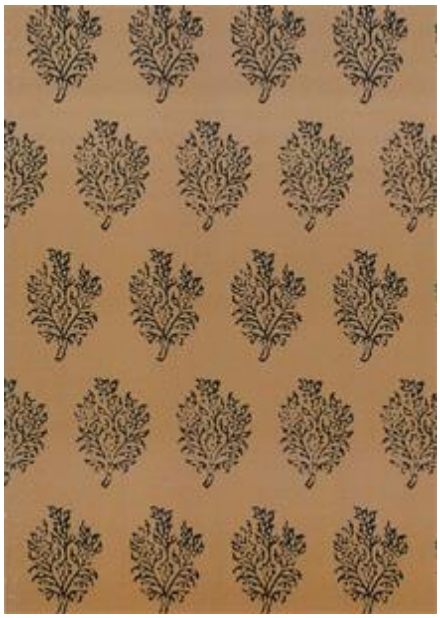

DESIGN NUMBER	269332
CLASS	24-01
1)GENERAL ELECTRIC COMPANY, A US COMPANY OF 1 RIVER ROAD, SCHENECTADY, 12345 NEW YORK, U.S.A.	
DATE OF REGISTRATION	05/02/2015
TITLE	STACKABLE BIOREACTOR FOR CELL CULTIVATION
PRIORITY NA	

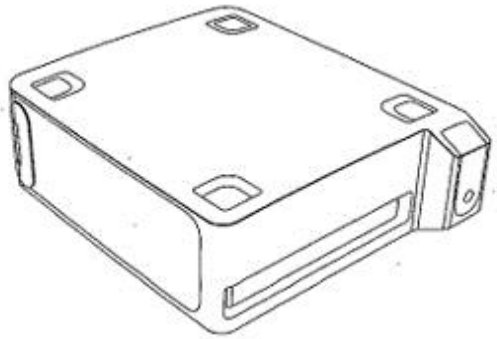

DESIGN NUMBER	264959
CLASS	15-05
1)LG ELECTRONICS INC. OF 20, YEOUIDO-DONG, YEONGDEUNGPO-GU, SEOUL 150- 721, REPUBLIC OF KOREA	
DATE OF REGISTRATION	21/08/2014
TITLE	PANEL, REAR
PRIORITY NA	

DESIGN NUMBER	202299
CLASS	07-07
1)ANJALI PRODUCTS, 169-170, BOMBAY TALKIES COMPOUND, MALAD (W) MUMBAI-400064, MAHARASHTRA, INDIA	
DATE OF REGISTRATION	01/12/2005
TITLE	STAND FOR HOLDING CUTLERY
PRIORITY NA	

DESIGN NUMBER	268598
CLASS	07-05
1)KONINKLIJKE PHILIPS N.V., A COMPANY ORGANIZED AND EXISTING UNDER THE LAWS OF THE KINGDOM OF THE NETHERLANDS, RESIDING AT EINDHOVEN, WHOSE POST-OFFICE ADDRESS IS HIGH TECH CAMPUS 5, 5656 AE EINDHOVEN, THE NETHERLANDS	
DATE OF REGISTRATION	01/01/2015
TITLE	ELECTRIC STEAM IRON

PRIORITY

PRIORITY NUMBER	DATE	COUNTRY
002494781-0003	02/07/2014	OHIM

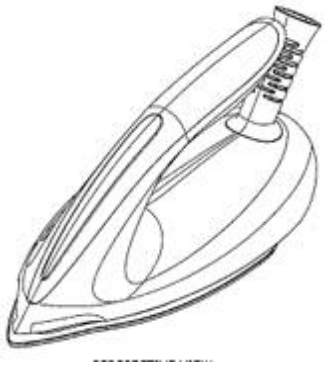

DESIGN NUMBER	269848
CLASS	14-03
1)SAMSUNG ELECTRONICS CO., LTD. 129, SAMSUNG-RO, YEONGTONG-GU, SUWON-SI, GYEONGGI-DO, 443-742, REPUBLIC OF KOREA, A COMPANY OF REPUBLIC OF KOREA	
DATE OF REGISTRATION	25/02/2015
TITLE	MOBILE PHONE

PRIORITY

PRIORITY NUMBER	DATE	COUNTRY
30-2014-0047562	01/10/2014	REPUBLIC OF KOREA

DESIGN NUMBER	269472
CLASS	09-01
1)ADIE BROSWON BREWERIES PRIVATE LIMITED AT - 709-711, 7TH FLOOR, AMBIENCE MALL, AMBIANCE ISLAND, NH-8, GURGAON-122002, A COMPANY INCORPORATED UNDER THE INDIAN COMPANIES ACT	
DATE OF REGISTRATION	10/02/2015
TITLE	BOTTLE
PRIORITY NA	

DESIGN NUMBER	269678
CLASS	08-06
1)VIVEK INDUSTRIES, 3, NILKANTH ESTATE, OPP. ODHAV POLICE STATION, GIDC, ODHAV, AHMEDABAD 382415, GUJARAT, INDIA, INDIAN	
DATE OF REGISTRATION	19/02/2015
TITLE	ALDROP
PRIORITY NA	

DESIGN NUMBER	270967
CLASS	05-05
1)MR. SIDDHARATH BINDRA (INDIAN INHABITANT) S/O LATE SHRI SATISH CHANDER BINDRA, R/O BINDRA FARM, F-4 ANSAL VILLA, NEAR CSKM SCHOOL, SATBARI, NEW DELHI-110074	
DATE OF REGISTRATION	06/04/2015
TITLE	TEXTILE FABRIC
PRIORITY NA	

DESIGN NUMBER	269299
CLASS	15-02
1)S.V.A RIKKON LUBES PVT LTD, A COMPANY INCORPORATED UNDER THE INDIAN COMPANIES ACT AT NO. 203, NAGESWARA RAO ROAD, 2ND EXTENSION, ATHIPET, AMBATTUR, CHENNAI-600058, INDIA, INDIAN-NATIONAL OF THE ABOVE ADDRESS	
DATE OF REGISTRATION	04/02/2015
TITLE	PUMPS FOR DISPENSING LUBRICANTS
PRIORITY NA	

DESIGN NUMBER	264949
CLASS	15-05
1)LG ELECTRONICS INC. OF 20, YEOUIDO-DONG, YEONGDEUNGPO-GU, SEOUL 150- 721, REPUBLIC OF KOREA	
DATE OF REGISTRATION	21/08/2014
TITLE	DOOR GLASS
PRIORITY NA	

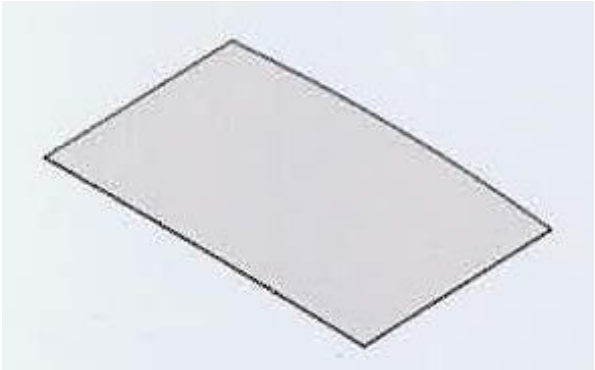

DESIGN NUMBER	266144
CLASS	12-11
1)EIDER MOTORS LIMITED, WHOSE ADDRESS 8-2-293/82/A/796-B, 4TH FLOOR, ROAD #36, JUBILEE HILLS, HYDERABAD-500033, TELANGANA, INDIA, AND WHOSE NATIONALITY IS INDIA	
DATE OF REGISTRATION	29/09/2014
TITLE	MOTOR CYCLE
PRIORITY NA	

DESIGN NUMBER	213373
CLASS	08-09
1)POOJA HARDWARE PRIVATE LIMITED., 24/170, KULDEEP CO-OP.HSG.SOCIETY, RAJENDRA NAGAR, DATTAPADA ROAD, OPP. RATIONING OFFICE, BORIVLI (EAST), MUMBAI-400066, MAHARASHTRA, INDIA	
DATE OF REGISTRATION	08/11/2007
TITLE	METAL FITTING FOR FURNITURE
PRIORITY NA	

DESIGN NUMBER	267404
CLASS	06-04
1)MR. RAVI UTMANI, INDIAN NATIONAL, WHOSE ADDRESS IS, - LAXMI IDEAL INTERIORS, PA-012-004, MAHINDRA WORLD CITY-SEZ, HANDICRAFT ZONE, AJMER ROAD, JAIPUR 302037, RAJ	
DATE OF REGISTRATION	14/11/2014
TITLE	STORAGE CABINET
PRIORITY NA	

DESIGN NUMBER	268761
CLASS	28-03
1)KONINKLIJKE PHILIPS N.V., A COMPANY ORGANIZED AND EXISTING UNDER THE LAWS OF THE KINGDOM OF THE NETHERLANDS, RESIDING AT EINDHOVEN, WHOSE POST-OFFICE ADDRESS IS HIGH TECH CAMPUS 5, 5656 AE EINDHOVEN, THE NETHERLANDS	
DATE OF REGISTRATION	09/01/2015
TITLE	BODY FOR SHAVER

PRIORITY

PRIORITY NUMBER	DATE	COUNTRY
002500785-0003	11/07/2014	OHIM

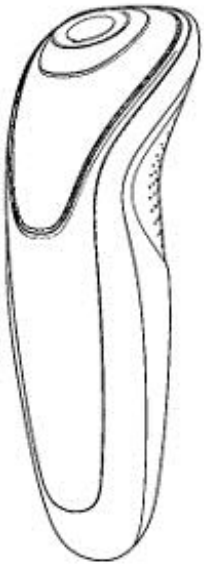

DESIGN NUMBER	270826
CLASS	21-01
1)MOHD. NAZIM (PROPRIETOR), NATIONALITY INDIAN TRADING AS STAR TOYS WHOSE ADDRESS IS 4923, DARZIAN STREET, BARA HINDU RAO, DELHI-110006	
DATE OF REGISTRATION	31/03/2015
TITLE	BULLDOZER TOY
PRIORITY NA	

DESIGN NUMBER	269393
CLASS	02-02
1)SNEHA MEHTA AT D-68, SECTOR 2, GAUTAM BUDDHA NAGAR, NOIDA-201301, UP, INDIA	
DATE OF REGISTRATION	09/02/2015
TITLE	LADIES COAT
PRIORITY NA	

DESIGN NUMBER	267633
CLASS	09-01
1)WM. WRIGLEY JR. COMPANY, AN AMERICAN COMPANY OF 1132, W. BLACKHAWK STREET, CHICAGO, ILLINOIS 60642, US	
DATE OF REGISTRATION	21/11/2014
TITLE	BOTTLE WITHOUT CAP

PRIORITY

PRIORITY NUMBER	DATE	COUNTRY
201430142224.7	21/05/2014	CHINA

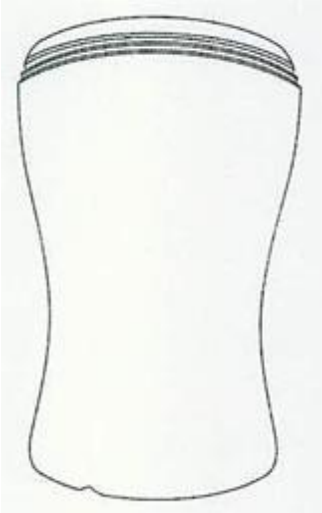

DESIGN NUMBER	268349
CLASS	23-03
1)HAVELLS INDIA LIMITED, AN INDIAN HAVING REGISTERED OFFICE AT 1, RAJ NARAIN MARG, CIVIL LINES, DELHI 110054	
DATE OF REGISTRATION	23/12/2014
TITLE	WATER HEATER
PRIORITY NA	

DESIGN NUMBER	267816
CLASS	09-05
1)COFFEE ONE COFFEE SYSTEM PTE. LTD., OF 10, ANSON ROAD 31-01 INTERNATIONAL PLAZA, 079903 SINGAPORE, A SINGAPORE COMPANY	
DATE OF REGISTRATION	28/11/2014
TITLE	CAPSULE FOR CONTAINING COFFEE POWDER

PRIORITY

PRIORITY NUMBER	DATE	COUNTRY
002473967	30/05/2014	OHIM

DESIGN NUMBER	268687
CLASS	28-03
1)KONINKLIJKE PHILIPS N.V., A COMPANY ORGANIZED AND EXISTING UNDER THE LAWS OF THE KINGDOM OF THE NETHERLANDS, RESIDING AT EINDHOVEN, WHOSE POST-OFFICE ADDRESS IS HIGH TECH CAMPUS 5, 5656 AE EINDHOVEN, THE NETHERLANDS	
DATE OF REGISTRATION	07/01/2015
TITLE	DRY SHAVER

PRIORITY

PRIORITY NUMBER	DATE	COUNTRY
002500785-0001	11/07/2014	OHIM

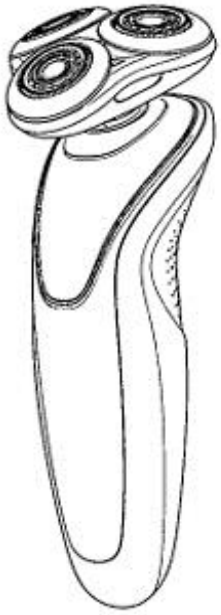

DESIGN NUMBER	269341
CLASS	08-06
1)SUMANGAL TECHNOCAST PVT. LTD. (A COMPANY INCORPORATED UNDER THE COMPANIES ACT, 1956) HAVING ITS PRINCIPAL PLACE OF BUSINESS AT ADDRESS: AIMS INDUSTRIAL PARK, SURVEY NO. 195/P 66, 80 FEET ROAD, BEHIND GOLDEN IND. AREA, KOTHARIYA, RAJKOT, GUJARAT, INDIA	
DATE OF REGISTRATION	05/02/2015
TITLE	HANDLE
PRIORITY NA	

DESIGN NUMBER	264961
CLASS	15-05
1)LG ELECTRONICS INC. OF 20, YEOUIDO-DONG, YEONGDEUNGPO-GU, SEOUL 150- 721, REPUBLIC OF KOREA	
DATE OF REGISTRATION	21/08/2014
TITLE	FRONT PANEL ASSEMBLY
PRIORITY NA	

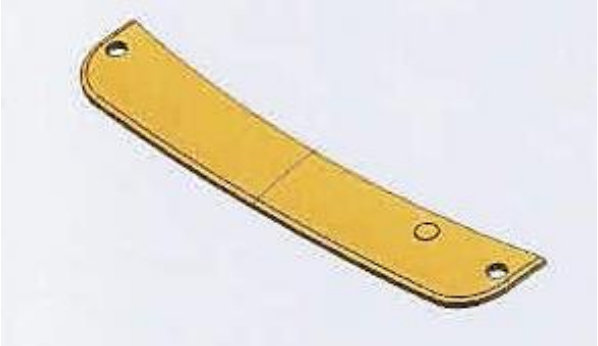

DESIGN NUMBER	202346
CLASS	09-01
1)SWISS PERSONAL CARE PVT. LTD., BARODA-JAMBUSAR N. HIGH WAY ROAD, AT & PO. DABHASA, TA. PADRA-391440, DIST. BARODA (GUJARAT), INDIA.	
DATE OF REGISTRATION	14/12/2005
TITLE	CONTAINER
PRIORITY NA	

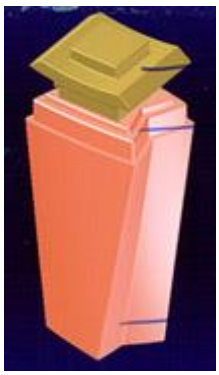

DESIGN NUMBER	266722
CLASS	09-07
1)MANJUSHREE TECHNOPACK LIMITED, OF 143, C-5, BOMMASANDRA INDUSTRIAL AREA, HOSUR ROAD, BANGALORE-560099, KARNATAKA, INDIA, AN INDIAN COMPANY	
DATE OF REGISTRATION	15/10/2014
TITLE	CAP FOR BOTTLE
PRIORITY NA	

DESIGN NUMBER	267291
CLASS	14-01
1)M/S GM MODULAR PVT. LTD., (A COMPANY INCORPORATED UNDER INDIAN COMPANIES ACT), 14/15, BOKADIA IND. ESTATE, SATIVALI ROAD, VASAI (EAST)-401208, DISTRICT-THANE, MAHARASHTRA (INDIA)	
DATE OF REGISTRATION	10/11/2014
TITLE	DOOR BELL
PRIORITY NA	

DESIGN NUMBER	267602
CLASS	07-05
1)KONINKLIJKE PHILIPS N.V., A COMPANY ORGANIZED AND EXISTING UNDER THE LAWS OF THE KINGDOM OF THE NETHERLANDS, RESIDING AT EINDHOVEN, WHOSE POST-OFFICE ADDRESS IS HIGH TECH CAMPUS 5, 5656 AE EINDHOVEN, THE NETHERLANDS	
DATE OF REGISTRATION	21/11/2014
TITLE	IRON WITH STEAM GENERATOR

PRIORITY

PRIORITY NUMBER	DATE	COUNTRY
201430148823.X	26/05/2014	OHIM

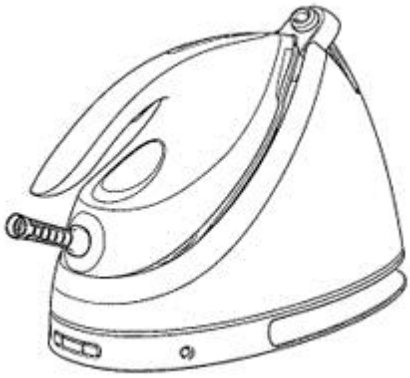

DESIGN NUMBER	267801
CLASS	12-15

1)BRIDGESTONE CORPORATION, A JAPANESE COMPANY ORGANIZED AND EXISTING UNDER THE LAWS OF JAPAN, MANUFACTURES AND MERCHANTS, OF
1-1, KYOBASHI 3-CHOME, CHUO-KU, TOKYO 104-8340, JAPAN

DATE OF REGISTRATION	28/11/2014
TITLE	TIRE TREAD

PRIORITY

PRIORITY NUMBER	DATE	COUNTRY
JP2014-011914	02/06/2014	JAPAN

DESIGN NUMBER	268470
CLASS	12-11

1)SHANDONG XIZHONG ELECTRONIC TECHNOLOGY CO., LTD. WEST SIDE, XIN XING ROAD, ZHANG FAN STREET OFFICE, HIGH-TECH ZONES, ZAOZHUANG CITY, SHANDONG PROVINCE 277800, CHINA,
NATIONALITY-CHINESE, LEGAL STATUS: COMPANY INCORPORATED IN CHINA

DATE OF REGISTRATION	29/12/2014
TITLE	ELECTRIC TRICYCLE

PRIORITY

PRIORITY NUMBER	DATE	COUNTRY
201430409076.0	25/10/2014	CHINA

DESIGN NUMBER	270970
CLASS	05-05

1)MR. SIDDHARATH BINDRA (INDIAN INHABITANT) S/O LATE SHRI SATISH CHANDER BINDRA,
R/O BINDRA FARM, F-4 ANSAL VILLA, NEAR CSKM SCHOOL, SATBARI, NEW DELHI-110074

DATE OF REGISTRATION	06/04/2015
TITLE	TEXTILE FABRIC

PRIORITY NA

DESIGN NUMBER	269310
CLASS	21-01
1)AUDI AG, A JOINT STOCK COMPANY ESTABLISHED UNDER GERMAN LAW OF AUTO-UNION-STR. 1, D-85045 INGOLSTADT, GERMANY	
DATE OF REGISTRATION	05/02/2015
TITLE	MODEL CAR

PRIORITY

PRIORITY NUMBER	DATE	COUNTRY
002515437-0001	06/08/2014	OHIM

DESIGN NUMBER	264955
CLASS	15-05
1)LG ELECTRONICS INC. OF 20, YEOUIDO-DONG, YEONGDEUNGPO-GU, SEOUL 150-721, REPUBLIC OF KOREA	
DATE OF REGISTRATION	21/08/2014
TITLE	LID INNER

PRIORITY NA

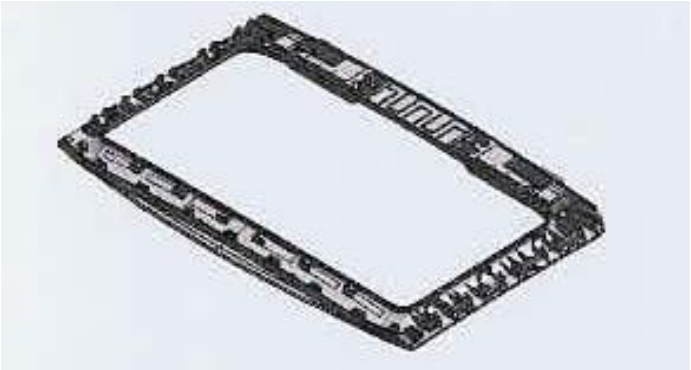

DESIGN NUMBER	213377
CLASS	08-09
1)POOJA HARDWARE PRIVATE LIMITED., 24/170, KULDEEP CO-OP.HSG.SOCIETY, RAJENDRA NAGAR, DATTAPADA ROAD, OPP. RATIONING OFFICE, BORIVLI (EAST), MUMBAI-400 066, MAHARASHTRA, INDIA.	
DATE OF REGISTRATION	08/11/2007
TITLE	METAL FITTING FOR FURNITURE

PRIORITY NA

DESIGN NUMBER	267434
CLASS	02-02
1)NATIONAL DRESS MANUFACTURING COMPANY; AN INDIAN COMPANY, HAVING ITS REGISTERED OFFICE AT 306, PREMSONS INDUSTRIAL ESTATE, TAHIRA COMPOUND, GUFA ROAD, JOGESHWARI (E), MUMBAI-400060, INDIA	
DATE OF REGISTRATION	17/11/2014
TITLE	RAINWEAR
PRIORITY NA	

DESIGN NUMBER	267691
CLASS	15-07
1)ATM BEYAZ ESYA PARCALARI SANAYI VE TICARET LIMITED SIRKETI, OF INÖNÜ MAH. NUR SULTAN NAZAR BAYEV SOK. NO: 21 GOSB-GEBZE/KOCAELI, TURKEY, A TURKISH COMPANY	
DATE OF REGISTRATION	25/11/2014
TITLE	CONDENSER
PRIORITY NA	

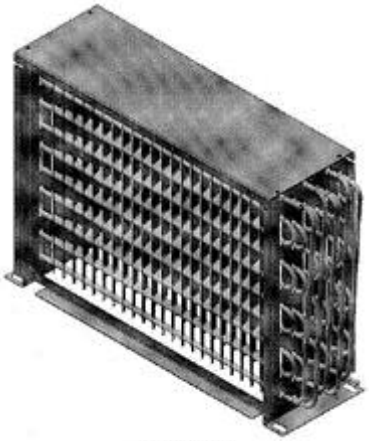

DESIGN NUMBER	208495
CLASS	09-01
1)CHEMICAL & PETROCHEMICAL INDUSTRIES, AN INDIAN PARTNERSHIP FIRM, OF D/8, TANGRA, INDUSTRIAL ESTATE, KOLKATA-700015, WEST BENGAL, INDIA	
DATE OF REGISTRATION	19/02/2007
TITLE	CONTAINER
PRIORITY NA	

DESIGN NUMBER	268265
CLASS	14-03
1)SAMSUNG ELECTRONICS CO., LTD., A KOREAN COMPANY, OF 129, SAMSUNG-RO, YEONGTONG-GU; SUWON-SI, GYEONGGI-DO 443-742, REPUBLIC OF KOREA	
DATE OF REGISTRATION	18/12/2014
TITLE	PORTABLE ELECTRONIC DEVICE

PRIORITY

PRIORITY NUMBER	DATE	COUNTRY
30-2014-0041207	25/08/2014	REPUBLIC OF KOREA

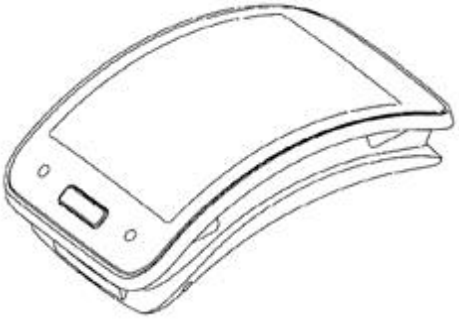

DESIGN NUMBER	269541
CLASS	09-03
1)M. M. PLASTOWARE (INDIA) PVT. LTD, GALA NO. 10, BLDG NO. 2, PARAM INDUSTRIAL ESTATE, NAIKPADA, WALIV, VASAI (EAST) DIST: THANE:-401208, STATE OF MAHARASHTRA, INDIA,/ A PRIVATE LIMITED COMPANY INCORPORATED UNDER INDIAN COMPANIES ACT, ABOVE ADDRESS	
DATE OF REGISTRATION	12/02/2015
TITLE	CONTAINER
PRIORITY NA	

DESIGN NUMBER	267634
CLASS	09-07
1)WM. WRIGLEY JR. COMPANY, AN AMERICAN COMPANY OF 1132, W. BLACKHAWK STREET, CHICAGO, ILLINOIS 60642, US	
DATE OF REGISTRATION	21/11/2014
TITLE	LID FOR BOTTLE

PRIORITY

PRIORITY NUMBER	DATE	COUNTRY
201430142226.6	21/05/2014	CHINA

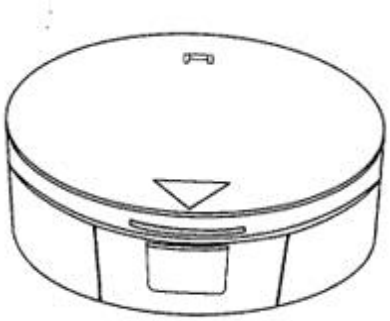

DESIGN NUMBER	268692
CLASS	14-03

1)LG ELECTRONICS INC.,
128, YEOUI-DAERO, YEONGDEUNGPO - GU, SEOUL, 150-721, REPUBLIC OF KOREA, A CORPORATION INCORPORATED UNDER THE LAWS OF THE REPUBLIC OF KOREA

DATE OF REGISTRATION	07/01/2015
TITLE	MOBILE PHONE

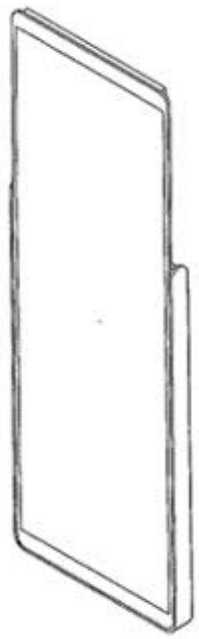

PRIORITY

PRIORITY NUMBER	DATE	COUNTRY
30-2014-0033466	08/07/2014	REPUBLIC OF KOREA

DESIGN NUMBER	269348
CLASS	08-06

1)SUMANGAL TECHNOCAST PVT. LTD. (A COMPANY INCORPORATED UNDER THE COMPANIES ACT, 1956) HAVING ITS PRINCIPAL PLACE OF BUSINESS AT ADDRESS:
AIMS INDUSTRIAL PARK, SURVEY NO. 195/P 66, 80 FEET ROAD, BEHIND GOLDEN IND. AREA, KOTHARIYA, RAJKOT, GUJARAT, INDIA

DATE OF REGISTRATION	05/02/2015
TITLE	HANDLE

PRIORITY NA

DESIGN NUMBER	264962
CLASS	15-05

1)LG ELECTRONICS INC. OF
20, YEOUIDO-DONG, YEONGDEUNGPO-GU, SEOUL 150- 721, REPUBLIC OF KOREA

DATE OF REGISTRATION	21/08/2014
TITLE	PANEL, FRONT

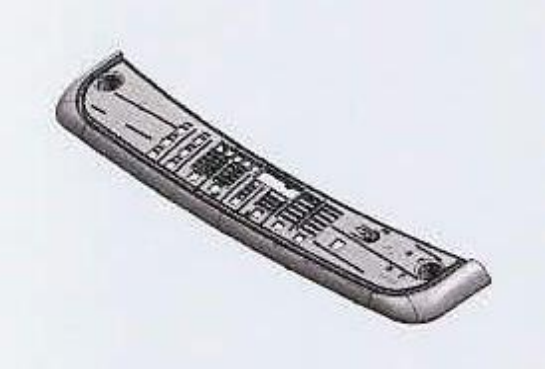

PRIORITY NA

DESIGN NUMBER	213375
CLASS	08-09
1)POOJA HARDWARE PRIVATE LIMITED., 24/170, KULDEEP CO-OP.HSG.SOCIETY, RAJENDRA NAGAR, DATTAPADA ROAD, OPP. RATIONING OFFICE, BORIVLI (EAST), MUMBAI-400066, MAHARASHTRA, INDIA	
DATE OF REGISTRATION	08/11/2007
TITLE	METAL FITTING FOR FURNITURE
PRIORITY NA	

DESIGN NUMBER	267678
CLASS	11-01
1)RISHI VERMA; AN INDIAN NATIONAL WHOSE ADDRESS IS 6352/2, ALEXANDRA ROAD, AMBALA CANTT-133001, HARYANA, INDIA	
DATE OF REGISTRATION	25/11/2014
TITLE	BRACELET
PRIORITY NA	

DESIGN NUMBER	268766
CLASS	12-12
1) E. BHASKARAN, AN INDIAN NATIONAL OF. NEW NO. 22, OLD NO. 34,KRISHNAPPA STREET, CHEPAUK, CHENNAI 600005	
DATE OF REGISTRATION	09/01/2015
TITLE	TRICYCLE FOR DISABLED PERSONS
PRIORITY NA	

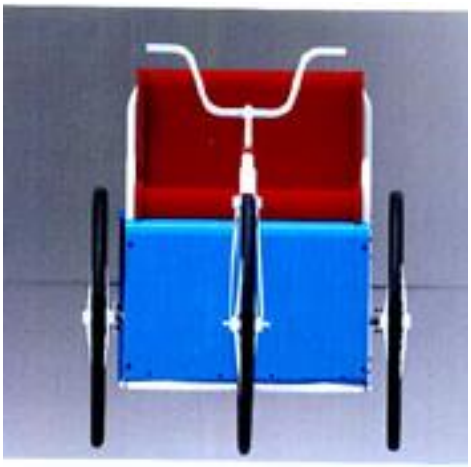

DESIGN NUMBER	270107
CLASS	13-03
1)YAZAKI CORPORATION, A JAPANESE CORPORATION OF 4-28, MITA 1-CHOME, MINATO-KU, TOKYO 108-8333, JAPAN	
DATE OF REGISTRATION	03/03/2015
TITLE	ELECTRICAL CONNECTOR HOUSING

PRIORITY

PRIORITY NUMBER	DATE	COUNTRY
2014-019413	03/09/2014	OHIM

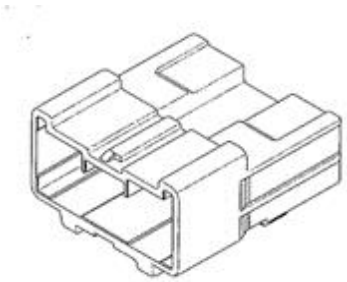

DESIGN NUMBER	269411
CLASS	08-07
1)GODREJ & BOYCE MFG. CO. LTD. OF LOCKS DIVISION (PLANT-18), PIROJSHANAGAR, VIKHROLI, MUMBAI - 400079, MAHARASHTRA, INDIA, INDIAN COMPANY	
DATE OF REGISTRATION	09/02/2015
TITLE	DRAWER LOCK
PRIORITY NA	

DESIGN NUMBER	201708
CLASS	15-02
1)SARVALIYA PRABHUBHAI KHODABHAI, ADULT, AN INDIAN NATIONAL, A SOLE PROPRIETOR OF SHREE RAM AGRO INDUSTRIES, HAVING ITS ADDRESS AT, 91, VIJAY INDUSTRIAL ESTATE, NR: BHIKSHUK GRAH, ODHAV, AHMEDABAD-15, GUJARAT STATE, INDIA	
DATE OF REGISTRATION	19/10/2005
TITLE	TURBINE PUMP
PRIORITY NA	

DESIGN NUMBER	213380
CLASS	08-09

1)POOJA HARDWARE PRIVATE LIMITED.,
24/170, KULDEEP CO-OP.HSG.SOCIETY, RAJENDRA NAGAR, DATTAPADA ROAD, OPP. RATIONING OFFICE, BORIVLI (EAST), MUMBAI-400066, MAHARASHTRA, INDIA

DATE OF REGISTRATION	08/11/2007
TITLE	METAL FITTING FOR FURNITURE

PRIORITY NA

DESIGN NUMBER	268770
CLASS	31-00

1)HAPPYCALL CO. LTD.,
104-2, GOLDENROOT-RO, JUCHON-MYEON, GIMHAE-SI, GYEONGSANGNAM-DO REPUBLIC OF KOREA, A COMPANY OF REPUBLIC OF KOREA

DATE OF REGISTRATION	09/01/2015
TITLE	JUICER

PRIORITY

PRIORITY NUMBER	DATE	COUNTRY
30-2014-0036206	23/07/2014	REPUBLIC OF KOREA

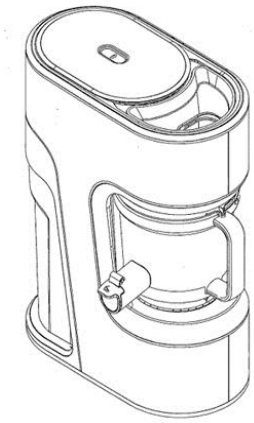

DESIGN NUMBER	268268
CLASS	14-03

1)SAMSUNG ELECTRONICS CO., LTD., A KOREAN COMPANY, OF
129, SAMSUNG-RO, YEONGTONG-GU; SUWON-SI, GYEONGGI-DO 443-742, REPUBLIC OF KOREA

DATE OF REGISTRATION	18/12/2014
TITLE	BAND FOR WEARABLE ELECTRONIC DEVICE

PRIORITY

PRIORITY NUMBER	DATE	COUNTRY
30-2014-0041209	25/08/2014	REPUBLIC OF KOREA

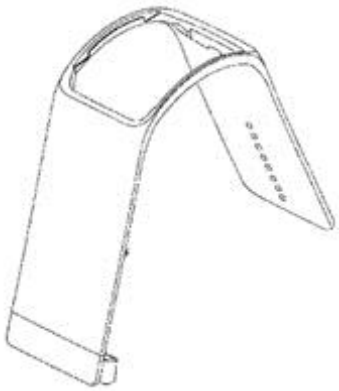

DESIGN NUMBER	269424
CLASS	12-11
1)JIGNESHBHAI ISHWARBHAI PITRODA, INDIAN NATIONAL HAVING PRINCIPAL PLACE OF BUSINESS AT OPP. OLD MAMLATDAR OFFICE, RASALA ROAD, WANKANER-DIST. RAJKOT	
DATE OF REGISTRATION	09/02/2015
TITLE	LUGGAGE CARRIER FOR VEHICLE
PRIORITY NA	

DESIGN NUMBER	213378
CLASS	08-09
1)POOJA HARDWARE PRIVATE LIMITED., 24/170, KULDEEP CO-OP.HSG.SOCIETY, RAJENDRA NAGAR, DATTAPADA ROAD, OPP. RATIONING OFFICE, BORIVLI (EAST), MUMBAI-400066, MAHARASHTRA, INDIA	
DATE OF REGISTRATION	08/11/2007
TITLE	METAL FITTING FOR FURNITURE
PRIORITY NA	

DESIGN NUMBER	267438
CLASS	02-02
1)NATIONAL DRESS MANUFACTURING COMPANY; AN INDIAN COMPANY, HAVING ITS REGISTERED OFFICE AT 306, PREMSONS INDUSTRIAL ESTATE, TAHIRA COMPOUND, GUFA ROAD, JOGESHWARI (E), MUMBAI-400060, INDIA	
DATE OF REGISTRATION	17/11/2014
TITLE	RAINWEAR
PRIORITY NA	

DESIGN NUMBER	267692
CLASS	15-07

1)ATM BEYAZ ESYA PARCALARI SANAYI VE TICARET LIMITED SIRKETI, OF
INÖNÜ MAH. NUR SULTAN NAZAR BAYEV SOK. NO: 21 GOSB-GEBZE/KOCAELI, TURKEY, A TURKISH COMPANY

DATE OF REGISTRATION	25/11/2014
TITLE	CONDENSER

PRIORITY NA

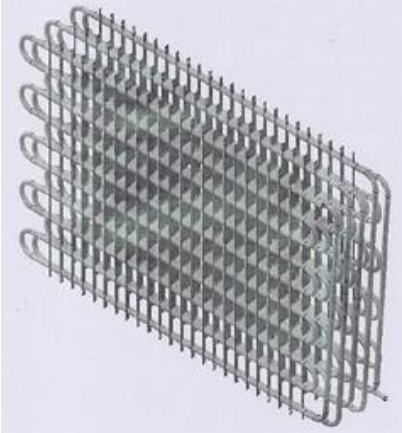

DESIGN NUMBER	268266
CLASS	14-03

1)SAMSUNG ELECTRONICS CO., LTD., A KOREAN COMPANY, OF
129, SAMSUNG-RO, YEONGTONG-GU; SUWON-SI, GYEONGGI-DO 443-742, REPUBLIC OF KOREA

DATE OF REGISTRATION	18/12/2014
TITLE	WEARABLE ELECTRONIC DEVICE

PRIORITY

PRIORITY NUMBER	DATE	COUNTRY
30-2014-0041214	25/08/2014	REPUBLIC OF KOREA

DESIGN NUMBER	269930
CLASS	12-16

1)TATA MOTORS LIMITED, AN INDIAN COMPANY OF
BOMBAY HOUSE, 24 HOMI MODY STREET, HUTATMA CHOWK, MUMBAI 400001, MAHARASHTRA, INDIA

DATE OF REGISTRATION	27/02/2015
TITLE	FRONT SKID PLATE OF A VEHICLE

PRIORITY NA

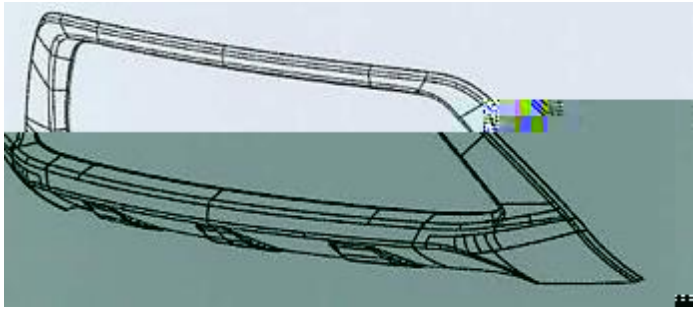

DESIGN NUMBER	269542
CLASS	02-02
1)SNEHA MEHTA AT D-68, SECTOR 2, GAUTAM BUDDHA NAGAR, NOIDA-201301, UP, INDIA	
DATE OF REGISTRATION	12/02/2015
TITLE	LADIES COAT
PRIORITY NA	

DESIGN NUMBER	270346
CLASS	12-15
1)APOLLO TYRES LIMITED, A COMPANY ORGANIZED UNDER THE LAWS OF INDIA, OF 7 INSTITUTIONAL AREA, SECTOR 32, GURGAON 122001, INDIA	
DATE OF REGISTRATION	12/03/2015
TITLE	TYRE TREAD
PRIORITY NA	

DESIGN NUMBER	213384
CLASS	08-09
1)POOJA HARDWARE PRIVATE LIMITED., 24/170, KULDEEP CO-OP.HSG.SOCIETY, RAJENDRA NAGAR, DATTAPADA ROAD, OPP. RATIONING OFFICE, BORIVLI (EAST), MUMBAI-400066, MAHARASHTRA, INDIA	
DATE OF REGISTRATION	08/11/2007
TITLE	METAL FITTING FOR FURNITURE
PRIORITY NA	

DESIGN NUMBER	268630
CLASS	28-03

1)KONINKLIJKE PHILIPS N.V., A COMPANY ORGANIZED AND EXISTING UNDER THE LAWS OF THE KINGDOM OF THE NETHERLANDS, RESIDING AT EINDHOVEN, WHOSE POST-OFFICE ADDRESS IS
HIGH TECH CAMPUS 5, 5656 AE EINDHOVEN, THE NETHERLANDS

DATE OF REGISTRATION	02/01/2015
TITLE	GROOMING APPARATUS

PRIORITY

PRIORITY NUMBER	DATE	COUNTRY
002496497-0004	04/07/2014	OHIM

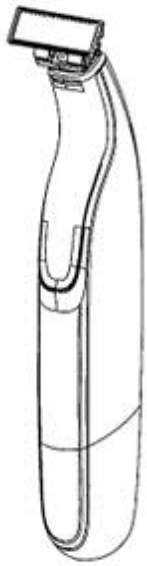

DESIGN NUMBER	268796
CLASS	28-03

1)THE GILLETTE COMPANY, A COMPANY INCORPORATED UNDER THE LAWS OF UNITED STATES OF AMERICA HAVING ITS OFFICE AT
IP/LEGAL PATENT DEPARTMENT - 3E, ONE GILLETTE PARK, BOSTON, MASSACHUSETTS 02127, UNITED STATES OF AMERICA

DATE OF REGISTRATION	12/01/2015
TITLE	RAZOR CARTRIDGE

PRIORITY

PRIORITY NUMBER	DATE	COUNTRY
29/496,827	17/07/2014	U.S.A.

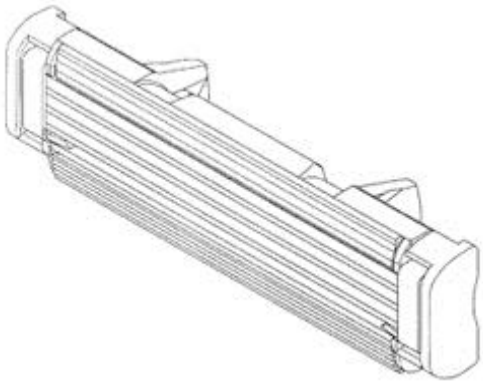

DESIGN NUMBER	269797
CLASS	10-04

1)WOCKHARDT LIMITED,
D-4, MIDC AREA, CHIKALTHANA, AURANGABAD-431006, M.S., INDIA, NATIONALITY-INDIA

DATE OF REGISTRATION	24/02/2015
TITLE	MEASURING SPOON

PRIORITY NA

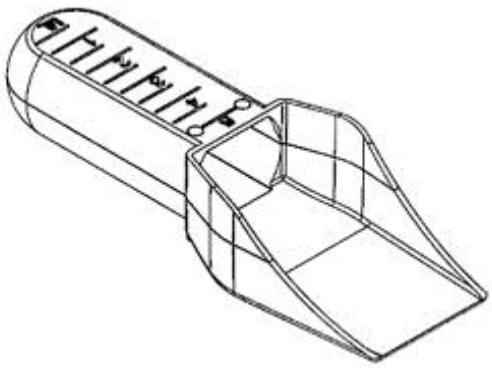

DESIGN NUMBER	268866
CLASS	02-04
1)M/S. ELISIR LIFESTYLE PVT. LIMITED, WHOSE ADDRESS IS E-13, GREATER KAILASH ENCLAVE PART-1, NEW DELHI-110048, (INDIA), AN INDIAN NATIONAL OF THE ABOVE ADDRESS	
DATE OF REGISTRATION	14/01/2015
TITLE	SOLE FOR SHOES
PRIORITY NA	

DESIGN NUMBER	268960
CLASS	15-09
1)GRIND MASTER MACHINES PVT. LTD., AN INDIAN COMPANY HAVING ADDRESS AS B-10/B-11/B-14, RAILWAY STATION MIDC, AURANGABAD-431005 MAHARASHTRA, INDIA	
DATE OF REGISTRATION	20/01/2015
TITLE	GEAR DEBURRING AND CHAMFERING MACHINE
PRIORITY NA	

DESIGN NUMBER	213385
CLASS	08-09
1)POOJA HARDWARE PRIVATE LIMITED., 24/170, KULDEEP CO-OP.HSG.SOCIETY, RAJENDRA NAGAR, DATTAPADA ROAD, OPP. RATIONING OFFICE, BORIVLI (EAST), MUMBAI-400066, MAHARASHTRA, INDIA	
DATE OF REGISTRATION	08/11/2007
TITLE	METAL FITTING FOR FURNITURE
PRIORITY NA	

DESIGN NUMBER	268631
CLASS	28-03

1)KONINKLIJKE PHILIPS N.V., A COMPANY ORGANIZED AND EXISTING UNDER THE LAWS OF THE KINGDOM OF THE NETHERLANDS, RESIDING AT EINDHOVEN, WHOSE POST-OFFICE ADDRESS IS
HIGH TECH CAMPUS 5, 5656 AE EINDHOVEN, THE NETHERLANDS

DATE OF REGISTRATION	02/01/2015
TITLE	GROOMING APPARATUS

PRIORITY

PRIORITY NUMBER	DATE	COUNTRY
002496497-0005	04/07/2014	OHIM

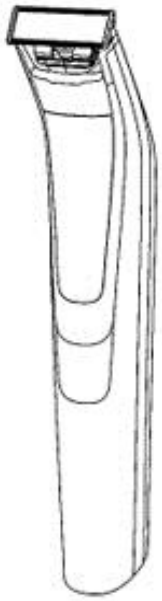

DESIGN NUMBER	269798
CLASS	24-02

1)WOCKHARDT LIMITED,
D-4, MIDC AREA, CHIKALTHANA, AURANGABAD-431006, M.S., INDIA, NATIONALITY-INDIA

DATE OF REGISTRATION	24/02/2015
TITLE	SPOON FOR MEDICAL USE

PRIORITY NA

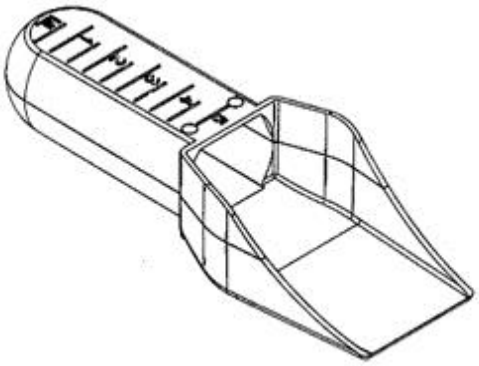

DESIGN NUMBER	268962
CLASS	15-09

1)GRIND MASTER MACHINES PVT. LTD., AN INDIAN COMPANY HAVING ADDRESS AS
B-10/B-11/B-14, RAILWAY STATION MIDC, AURANGABAD-431005 MAHARASHTRA, INDIA

DATE OF REGISTRATION	20/01/2015
TITLE	PIN DEBURRING MACHINE

PRIORITY NA

DESIGN NUMBER	213386	
CLASS	08-09	
1)POOJA HARDWARE PRIVATE LIMITED., 24/170, KULDEEP CO-OP.HSG.SOCIETY, RAJENDRA NAGAR, DATTAPADA ROAD, OPP. RATIONING OFFICE, BORIVLI (EAST), MUMBAI-400066, MAHARASHTRA, INDIA		
DATE OF REGISTRATION	08/11/2007	
TITLE	METAL FITTING FOR FURNITURE	
PRIORITY NA		

DESIGN NUMBER	268969	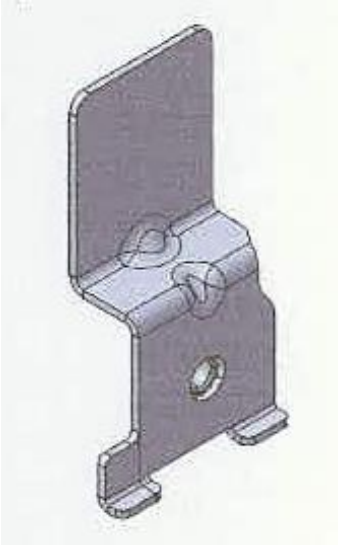
CLASS	12-16	
1)TATA MOTORS LIMITED, AN INDIAN COMPANY OF BOMBAY HOUSE, 24 HOMI MODY STREET, HUTATMA CHOWK, MUMBAI 400001, MAHARASHTRA, INDIA		
DATE OF REGISTRATION	20/01/2015	
TITLE	VEHICLE HORN MOUNTING BRACKET	
PRIORITY NA		

DESIGN NUMBER	201919	
CLASS	22-06	
1)MRS. ADHI LAXMI DJEACOUMAR, INDIAN NATIONAL, PROPRIETRIX OF SHREE JAYALAKSHMI INDUSTRIES, HAVING OUR OFFICE AT R. S.NO. 26/7, OLAVAIKAL, KOODAPAKKAM POST, PONDICHERRY-605 502, INDIA,		
DATE OF REGISTRATION	07/11/2005	
TITLE	MOSQUITO COIL	
PRIORITY NA		

DESIGN NUMBER	264521	
CLASS	09-01	
1)PRECISION MOULDS AND DIES PVT. LTD., AN INDIAN COMPANY OF THE ADDRESS 8/6A-1, SITE IV, INDUSTRIAL AREA, SAHIBABAD, GHAZIABAD, U.P., INDIA.		
DATE OF REGISTRATION	06/08/2014	
TITLE	BOTTLE WITHOUT CAP	
PRIORITY NA		

DESIGN NUMBER	213388	
CLASS	08-09	
1)POOJA HARDWARE PRIVATE LIMITED., 24/170, KULDEEP CO-OP.HSG.SOCIETY, RAJENDRA NAGAR, DATTAPADA ROAD, OPP. RATIONING OFFICE, BORIVLI (EAST), MUMBAI-400066, MAHARASHTRA, INDIA		
DATE OF REGISTRATION	08/11/2007	
TITLE	METAL FITTING FOR FURNITURE	
PRIORITY NA		

DESIGN NUMBER	250510	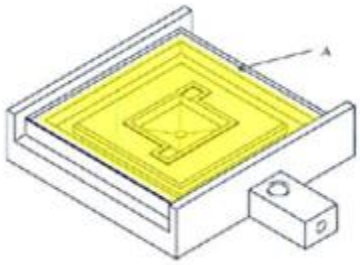
CLASS	24-02	
1)HITACHI CHEMICAL COMPANY, LTD., A JAPANESE COMPANY OF 9-2, MARUNOUCHI 1-CHOME, CHIYODA-KU, TOKYO 100-6606, JAPAN (FORMERLY OF 1-1, NISHI-SHINJUKU 2-CHOME, SHINJUKU-KU, TOKYO 163-0449, JAPAN)		
DATE OF REGISTRATION	27/12/2012	
TITLE	COMPONENT FOR CELL-COLLECTING CARTRIDGE	
PRIORITY NA		

DESIGN NUMBER	267506
CLASS	13-03

1)SUMITOMO WIRING SYSTEMS, LTD.,
1-14, NISHISUEHIRO-CHO, YOKKAICHI-SHI, MIE-KEN 510-8503, JAPAN, NATIONALITY-JAPAN

DATE OF REGISTRATION	19/11/2014
TITLE	ELECTRICAL CONNECTOR HOUSING

PRIORITY

PRIORITY NUMBER	DATE	COUNTRY
2014-011941	03/06/2014	JAPAN

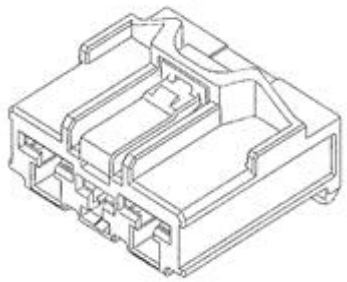

DESIGN NUMBER	268547
CLASS	06-01

1)MILSCO MANUFACTURING COMPANY, A UNIT OF JASON INCORPORATED, A CORPORATION ORGANIZED UNDER THE LAWS OF THE STATE OF WISCONSIN, OF
9009 NORTH 51ST STREET, MILWAUKEE, WISCONSIN 53223, U.S.A.

DATE OF REGISTRATION	31/12/2014
TITLE	VEHICLE SEAT

PRIORITY

PRIORITY NUMBER	DATE	COUNTRY
29/499,893	19/08/2014	U.S.A.

DESIGN NUMBER	268640
CLASS	07-05

1)KONINKLIJKE PHILIPS N.V., A COMPANY ORGANIZED AND EXISTING UNDER THE LAWS OF THE KINGDOM OF THE NETHERLANDS, RESIDING AT EINDHOVEN, WHOSE POST-OFFICE ADDRESS IS
HIGH TECH CAMPUS 5, 5656 AE EINDHOVEN, THE NETHERLANDS

DATE OF REGISTRATION	05/01/2015
TITLE	ELECTRIC DRY IRON

PRIORITY

PRIORITY NUMBER	DATE	COUNTRY
002580795-0001	19/11/2014	OHIM

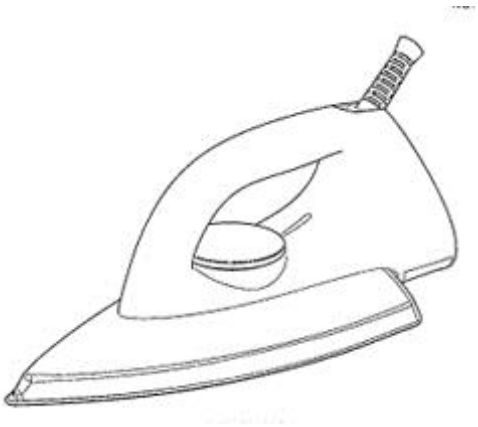

DESIGN NUMBER	268888
CLASS	23-04

1)SATA GMBH & CO. KG, OF
DOMERTALSTRASSE 20, 70806 KORNWESTHEIM, DEUTSCHLAND, GERMANY, GERMAN COMPANY

DATE OF REGISTRATION	15/01/2015
TITLE	AIR FILTER

PRIORITY

PRIORITY NUMBER	DATE	COUNTRY
2014302563327	25/07/2014	CHINA

DESIGN NUMBER	269257
CLASS	24-01

1)DR. ATHARV PRASHANT MORALWAR, HAVING ITS ADDRESS AT
310, NIRMAN VYAPAR KENDRA SECTOR 17, VASHI, NAVI MUMBAI, MAHARASHTRA, INDIA, MAHARASHTRA, INDIA

DATE OF REGISTRATION	03/02/2015
TITLE	MEDICAL EQUIPMENT

PRIORITY NA

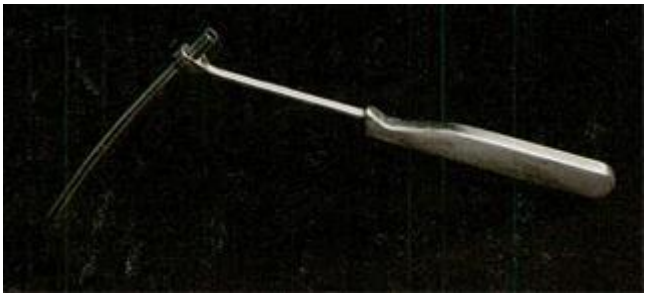

DESIGN NUMBER	213387
CLASS	08-09

1)POOJA HARDWARE PRIVATE LIMITED.,
24/170, KULDEEP CO-OP.HSG.SOCIETY, RAJENDRA NAGAR, DATTAPADA ROAD, OPP. RATIONING OFFICE, BORIVLI (EAST), MUMBAI-400066, MAHARASHTRA, INDIA

DATE OF REGISTRATION	08/11/2007
TITLE	METAL FITTING FOR FURNITURE

PRIORITY NA

DESIGN NUMBER	268639
CLASS	28-03
1)KONINKLIJKE PHILIPS N.V., A COMPANY ORGANIZED AND EXISTING UNDER THE LAWS OF THE KINGDOM OF THE NETHERLANDS, RESIDING AT EINDHOVEN, WHOSE POST-OFFICE ADDRESS IS HIGH TECH CAMPUS 5, 5656 AE EINDHOVEN, THE NETHERLANDS	
DATE OF REGISTRATION	05/01/2015
TITLE	COMB FOR BODY GROOMER

PRIORITY

PRIORITY NUMBER	DATE	COUNTRY
002506584-0002	22/07/2014	OHIM

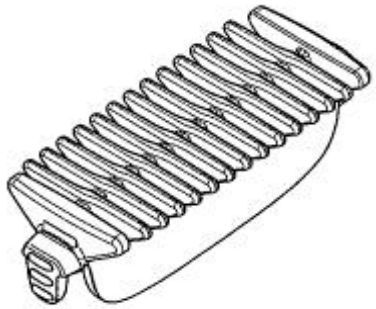

DESIGN NUMBER	268973
CLASS	13-99
1)WORLD RENEWAL SPIRITUAL TRUST, (A PUBLIC CHARITABLE TRUST REGISTERED UNDER BOMBAY PUBLIC TRUST ACT, 1950 WITH DY. CHARITY COMMISSIONER, MUMBAI VIDE REGISTRATION NO. E-3874), OF THE ADDRESS 121, MAHATMA GANDHI ROAD, ABOVE BANK OF BARODA, FORT, MUMBAI-400023, INDIA	
DATE OF REGISTRATION	20/01/2015
TITLE	SOLAR PARABOLOID REFLECTOR WITH ROTATING SUPPORT AND STAND
PRIORITY NA	

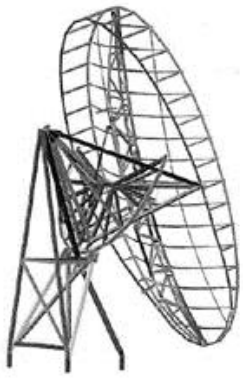

DESIGN NUMBER	264010
CLASS	12-16
1)EUROPEAN TRAILER SYSTEMS GMBH, A LIMITED LIABILITY CORPORATION ORGANISED AND EXISTING UNDER THE LAWS OF GERMANY WHOSE ADDRESS IS IM MOERSER FELD 1F, 47441 MOERS, GERMANY	
DATE OF REGISTRATION	14/07/2014
TITLE	JOINT FOR SLIDING ROOFS FOR TRUCKS

PRIORITY

PRIORITY NUMBER	DATE	COUNTRY
DM/083 094	14/01/2014	GERMANY

DESIGN NUMBER	267551
CLASS	25-01

1)ROXTEC AB, A SWEDISH JOINT STOCK COMPANY, OF
PO BOX 540 (STREET ADDRESS: ROMBVÄGEN 2) SE-37123 KARLSKRONA, SWEDEN

DATE OF REGISTRATION	21/11/2014
TITLE	PART OF SEALING DEVICE FOR CABLES

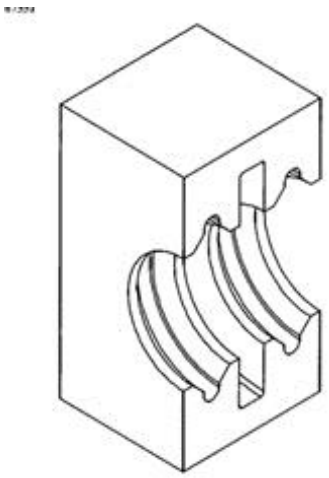

PRIORITY

PRIORITY NUMBER	DATE	COUNTRY
002485664	18/06/2014	OHIM

DESIGN NUMBER	267775
CLASS	23-01

1)CARRIS PIPES AND TUBES PRIVATE LIMITED, AN INDIAN COMPANY OF
VIII/220 A, MUDAKUZHA P.O., AKANAD, KOCHI, ERNAKULAM (DIST), KERALA 683546, KOCHI, INDIA

DATE OF REGISTRATION	27/11/2014
TITLE	TANK

PRIORITY NA

DESIGN NUMBER	268891
CLASS	23-04

1)SATA GMBH & CO. KG, OF
DOMERTALSTRASSE 20, 70806 KORNWESTHEIM, DEUTSCHLAND, GERMANY, GERMAN COMPANY

DATE OF REGISTRATION	15/01/2015
TITLE	AIR FILTER

PRIORITY

PRIORITY NUMBER	DATE	COUNTRY
2014302563327	25/07/2014	CHINA

DESIGN NUMBER	270924
CLASS	14-03

1)DAIKIN INDUSTRIES LTD. A JAPANESE COMPANY OF THE ADDRESS:
UMEDA CENTER BUILDING, 4-12 NAKAZAKI-NISHI 2-CHOME, KITA-KU, OSAKA-SHI, OSAKA-FU, JAPAN

DATE OF REGISTRATION	01/04/2015
TITLE	REMOTE CONTROLLER FOR AIR CONDITIONER

PRIORITY

PRIORITY NUMBER	DATE	COUNTRY
2014-025145	11/11/2014	JAPAN

DESIGN NUMBER	269281
CLASS	21-01

1)AUDI AG, A JOINT STOCK COMPANY ESTABLISHED UNDER GERMAN LAW OF
AUTO-UNION-STR. 1, D-85045 INGOLSTADT, GERMANY

DATE OF REGISTRATION	04/02/2015
TITLE	MODEL CAR

PRIORITY

PRIORITY NUMBER	DATE	COUNTRY
002515411-0001	06/08/2014	OHIM

DESIGN NUMBER	266145
CLASS	12-11

1)EIDER MOTORS LIMITED, WHOSE ADDRESS
8-2-293/82/A/796-B, 4TH FLOOR, ROAD #36, JUBILEE HILLS, HYDERABAD-500033, TELANGANA, INDIA, AND WHOSE NATIONALITY IS INDIA

DATE OF REGISTRATION	29/09/2014
TITLE	MOTOR CYCLE

PRIORITY NA

DESIGN NUMBER	213374
CLASS	08-09
1)POOJA HARDWARE PRIVATE LIMITED., 24/170, KULDEEP CO-OP.HSG.SOCIETY, RAJENDRA NAGAR, DATTAPADA ROAD, OPP. RATIONING OFFICE, BORIVLI (EAST), MUMBAI-400066, MAHARASHTRA, INDIA	
DATE OF REGISTRATION	08/11/2007
TITLE	METAL FITTING FOR FURNITURE
PRIORITY NA	

DESIGN NUMBER	267413
CLASS	11-01
1)RISHI VERMA; AN INDIAN NATIONAL WHOSE ADDRESS IS 6352/2, ALEXANDRA ROAD, AMBALA CANTT-133001, HARYANA, INDIA	
DATE OF REGISTRATION	14/11/2014
TITLE	EARRING (SET)
PRIORITY NA	

DESIGN NUMBER	269409
CLASS	08-07
1)GODREJ & BOYCE MFG. CO. LTD. OF LOCKS DIVISION (PLANT-18), PIROJSHANAGAR, VIKHROLI, MUMBAI - 400079, MAHARASHTRA, INDIA, INDIAN COMPANY	
DATE OF REGISTRATION	09/02/2015
TITLE	LOCK
PRIORITY NA	

DESIGN NUMBER	213379
CLASS	08-09
1)POOJA HARDWARE PRIVATE LIMITED., 24/170, KULDEEP CO-OP.HSG.SOCIETY, RAJENDRA NAGAR, DATTAPADA ROAD, OPP. RATIONING OFFICE, BORIVLI (EAST), MUMBAI-400066, MAHARASHTRA, INDIA	
DATE OF REGISTRATION	08/11/2007
TITLE	METAL FITTING FOR FURNITURE
PRIORITY NA	

DESIGN NUMBER	268769
CLASS	24-02
1)TROIKAA PHARMACEUTICALS LIMITED, AN INDIAN COMPANY INCORPORATED UNDER THE COMPANIES ACT, 1956 OF COMMERCE HOUSE-1, SATYA MARG, BODAKDEV, AHMEDABAD 380054, STATE OF GUJARAT, INDIA	
DATE OF REGISTRATION	09/01/2015
TITLE	DROPPER WITH CAP
PRIORITY NA	

DESIGN NUMBER	268952
CLASS	23-04
1)RECKITT BENCKISER (BRANDS) LIMITED, A COMPANY ORGANIZED AND EXISTING UNDER THE LAWS OF UNITED KINGDOM OF 103-105 BATH ROAD, SLOUGH, BERKSHIRE, SL1 3UH, UNITED KINGDOM	
DATE OF REGISTRATION	19/01/2015
TITLE	AIR FRESHENER

PRIORITY

PRIORITY NUMBER	DATE	COUNTRY
002505131-0001	18/07/2014	OHIM

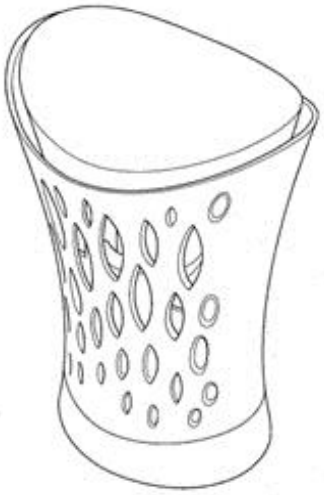

DESIGN NUMBER	269546
CLASS	12-16
1)MINDA INDUSTRIES LIMITED (SWITCH-DIVISION), AN INDIAN COMPANY OF VILL. NAWADA FATEPUR, P.O. SIKANDERPUR BADDA, MANESAR, DISTT. GURGAON, HARYANA-122004, INDIA	
DATE OF REGISTRATION	12/02/2015
TITLE	LEVER HOLDER IN BRAKE FOR AUTOMOBILE
PRIORITY NA	

DESIGN NUMBER	269421
CLASS	13-02
1)EXIDE INDUSTRIES LIMITED OF 'EXIDE HOUSE', 59E, CHOWRINGHEE ROAD, KOLKATA-700 020, STATE OF WEST BENGAL, INDIA, AN INDIAN COMPANY	
DATE OF REGISTRATION	09/02/2015
TITLE	BATTERY
PRIORITY NA	

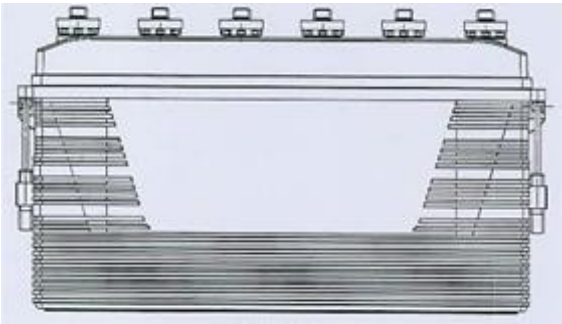

DESIGN NUMBER	213383
CLASS	08-09
1)POOJA HARDWARE PRIVATE LIMITED., 24/170, KULDEEP CO-OP.HSG.SOCIETY, RAJENDRA NAGAR, DATTAPADA ROAD, OPP. RATIONING OFFICE, BORIVLI (EAST), MUMBAI-400066, MAHARASHTRA, INDIA	
DATE OF REGISTRATION	08/11/2007
TITLE	METAL FITTING FOR FURNITURE
PRIORITY NA	

DESIGN NUMBER	268621
CLASS	24-02
1)3M INNOVATIVE PROPERTIES COMPANY, A COMPANY INCORPORATED IN THE STATE OF DELAWARE OF 3M CENTER, SAINT PAUL, MINNESOTA 55133-3427, U.S.A.	
DATE OF REGISTRATION	02/01/2015
TITLE	MEDICAL INSTRUMENT SECUREMENT DEVICE
PRIORITY	

PRIORITY NUMBER	DATE	COUNTRY
29/495,567	02/07/2014	U.S.A.

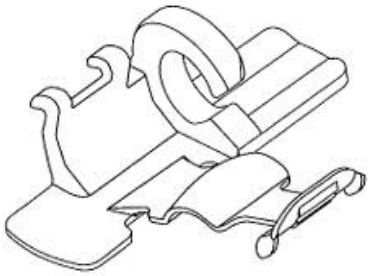

DESIGN NUMBER	268959
CLASS	15-09
1)GRIND MASTER MACHINES PVT. LTD., AN INDIAN COMPANY HAVING ADDRESS AS B-10/B-11/B-14, RAILWAY STATION MIDC, AURANGABAD-431005 MAHARASHTRA, INDIA	
DATE OF REGISTRATION	20/01/2015
TITLE	AUTOMATIC CRANKSHAFT DYNAMIC BALANCING MACHINE
PRIORITY NA	

DESIGN NUMBER	271026
CLASS	05-05
1)MR. SIDDHARATH BINDRA (INDIAN INHABITANT) S/O LATE SHRI SATISH CHANDER BINDRA, R/O BINDRA FARM, F-4 ANSAL VILLA, NEAR CSKM SCHOOL, SATBARI, NEW DELHI-110074	
DATE OF REGISTRATION	06/04/2015
TITLE	TEXTILE FABRIC
PRIORITY NA	

DESIGN NUMBER	213363
CLASS	08-09

1)POOJA HARDWARE PRIVATE LIMITED.,
24/170, KULDEEP CO-OP.HSG.SOCIETY, RAJENDRA NAGAR, DATTAPADA ROAD, OPP. RATIONING OFFICE, BORIVLI (EAST), MUMBAI-400 066, MAHARASHTRA, INDIA

DATE OF REGISTRATION	08/11/2007
TITLE	METAL FITTING FOR FURNITURE

PRIORITY NA

DESIGN NUMBER	267635
CLASS	09-01

1)WM. WRIGLEY JR. COMPANY, AN AMERICAN COMPANY OF
1132, W. BLACKHAWK STREET, CHICAGO, ILLINOIS 60642, US

DATE OF REGISTRATION	21/11/2014
TITLE	BOTTLE

PRIORITY

PRIORITY NUMBER	DATE	COUNTRY
201430142253.3	21/05/2014	CHINA

DESIGN NUMBER	269349
CLASS	08-06

1)SUMANGAL TECHNOCAST PVT. LTD. (A COMPANY INCORPORATED UNDER THE COMPANIES ACT, 1956) HAVING ITS PRINCIPAL PLACE OF BUSINESS AT ADDRESS:
AIMS INDUSTRIAL PARK, SURVEY NO. 195/P 66, 80 FEET ROAD, BEHIND GOLDEN IND. AREA, KOTHARIYA, RAJKOT, GUJARAT, INDIA

DATE OF REGISTRATION	05/02/2015
TITLE	HANDLE

PRIORITY NA

DESIGN NUMBER	263461
CLASS	07-02
1)MRS. RASHMI RANADE, OF FLAT # 25, GOLDEN GALAXY, 20/5, SOMESHWAR WADI, BANER 411008, INDIA, AN INDIAN CITIZEN	
DATE OF REGISTRATION	17/06/2014
TITLE	GLASS & PITCHER SET
PRIORITY NA	

DESIGN NUMBER	174935
CLASS	09-04
1) SINTEX INDUSTRIES LTD., KALOL-382721, NORTH GUJARATE, INDIA	
DATE OF REGISTRATION	03/11/2011
TITLE	CRATE
PRIORITY NA	

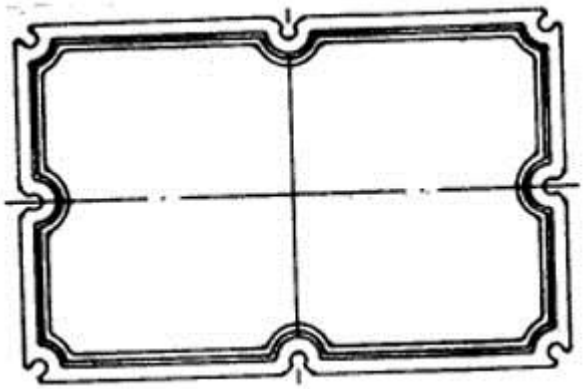

DESIGN NUMBER	197610
CLASS	19-06
1) MERZ & KRELL GMBH & CO, KGAA, A COMPANY INCORPORATED UNDER THE LAWS OF GERMANY, OF BAHNHOFSTRASSE 76, 64401 GROSS-BIEBERAU, GERMANY, A GERMAN COMPANY	
DATE OF REGISTRATION	12/05/2014
TITLE	COMPONENT OF WRITING INSTRUMENT

PRIORITY

PRIORITY NUMBER	DATE	COUNTRY
40403048.3	12/05/2014	GERMANY

DESIGN NUMBER	199711
CLASS	28-03
1)JOHNSON & JOHNSON VISION CARE, INC. GRANDVIEW ROAD, SKILLMAN, N J 08558, A NEW JERSEY CORPORATION, U.S.A.,	
DATE OF REGISTRATION	28/12/2004
TITLE	SKIN TREATMENT ARTICLE

PRIORITY

PRIORITY NUMBER	DATE	COUNTRY
29/220,249	28/12/2014	U.S.A.

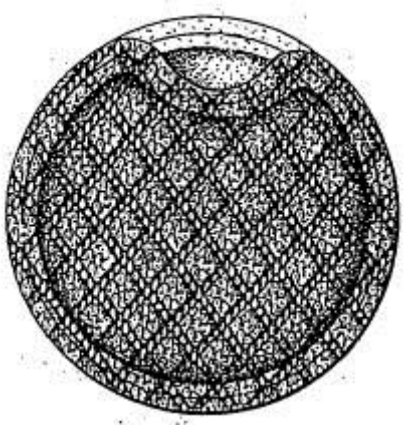

DESIGN NUMBER	222253
CLASS	26-03
1)CROMPTON GREAVES LIMITED 6TH FLOOR, CG HOUSE, DR. ANNIE BESANT ROAD, WORLI, MUMBAI-400030, MAHARASHTRA, INDIA	
DATE OF REGISTRATION	02/04/2009
TITLE	SOLAR LANTERN
PRIORITY NA	

DESIGN NUMBER	222271
CLASS	08-06
1)ITALIK METALWARE PVT LTD. G:212-215, LODHIKA, G.I.D.C, KALAWAD ROAD, METODA, RAJKOT- 360003, GUJARAT, INDIA	
DATE OF REGISTRATION	03/04/2009
TITLE	HANDLE
PRIORITY NA	

DESIGN NUMBER	222275
CLASS	08-06
1)ITALIK METALWARE PVT LTD. G:212-215, LODHIKA, G.I.D.C, KALAWAD ROAD, METODA, RAJKOT- 360003, GUJARAT, INDIA	
DATE OF REGISTRATION	03/04/2009
TITLE	HANDLE
PRIORITY NA	

DESIGN NUMBER	222338
CLASS	12-04
1)INNOVA PATENT GMBH RICKENBACHERSTRASSE 8-10, A-6960 WOLFURT, AUSTRIA	
DATE OF REGISTRATION	08/04/2009
TITLE	SEPARATING ELEMENT FOR SEATS OF A CHAIR LIFT

PRIORITY

PRIORITY NUMBER	DATE	COUNTRY
MU772/2008	09/10/2008	AUSTRIA

DESIGN NUMBER	222339
CLASS	12-04
1)INNOVA PATENT GMBH RICKENBACHERSTRASSE 8-10, A-6960 WOLFURT, AUSTRIA	
DATE OF REGISTRATION	08/04/2009
TITLE	SEPARATING ELEMENT FOR SEATS OF A CHAIR LIFT

PRIORITY

PRIORITY NUMBER	DATE	COUNTRY
MU772/2008	09/10/2008	AUSTRIA

DESIGN NUMBER	222373
CLASS	13-99
1)WIPRO LIMITED DODDAKANNELLI, SARJAPUR ROAD, BANGALORE-560035, KARNATAKA, INDIA	
DATE OF REGISTRATION	09/04/2009
TITLE	SWITCH COVER

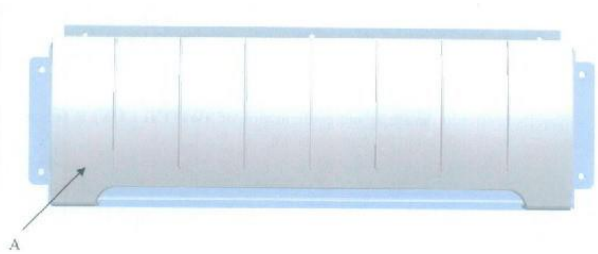

PRIORITY NA

DESIGN NUMBER	222377
CLASS	06-08
1)SUPERIOR ALTERNATIVE INNOVATIONS PTV. LTD. 375 SHAKESPEARE STREET, MACKAY QLD 4740, AUSTRALIA	
DATE OF REGISTRATION	09/04/2009
TITLE	A HANGER

PRIORITY

PRIORITY NUMBER	DATE	COUNTRY
323391	09/10/2008	AUSTRALIA

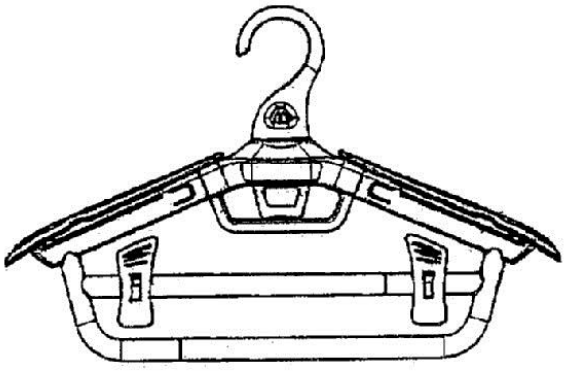

DESIGN NUMBER	222378
CLASS	06-08
1)SUPERIOR ALTERNATIVE INNOVATIONS PTV. LTD. 375 SHAKESPEARE STREET, MACKAY QLD 4740, AUSTRALIA	
DATE OF REGISTRATION	09/04/2009
TITLE	A HANGER BODY

PRIORITY

PRIORITY NUMBER	DATE	COUNTRY
323392	09/10/2008	AUSTRALIA

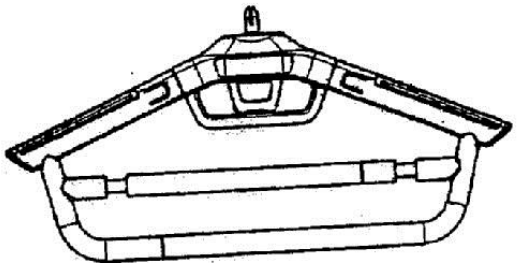

DESIGN NUMBER	222379
CLASS	06-08
1)SUPERIOR ALTERNATIVE INNOVATIONS PTV. LTD. 375 SHAKESPEARE STREET, MACKAY QLD 4740, AUSTRALIA	
DATE OF REGISTRATION	09/04/2009
TITLE	A RETAIL HOOK FOR A HANGER
PRIORITY	

PRIORITY NUMBER	DATE	COUNTRY
323012	09/10/2008	AUSTRALIA

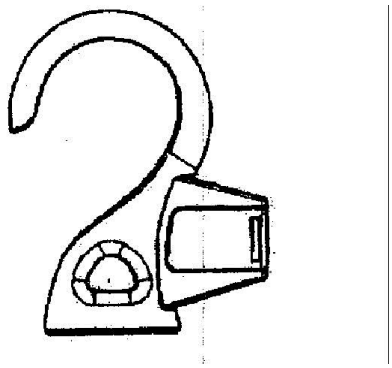

DESIGN NUMBER	222405
CLASS	01-00
1)WIPRO LIMITED DODDAKANNELLI, SARJAPUR ROAD, BANGALORE-560035, KARNATAKA, INDIA	
DATE OF REGISTRATION	15/04/2009
TITLE	LIGHT SCREEN
PRIORITY NA