पेटेंट कार्यालय
शासकीय जर्नल

OFFICIAL JOURNAL
OF
THE PATENT OFFICE

निर्गमन सं. 30/2015	शुक्रवार	दिनांक: 24/07/2015
ISSUE NO. 30/2015	FRIDAY	DATE: 24/07/2015

पेटेंट कार्यालय का एक प्रकाशन

PUBLICATION OF THE PATENT OFFICE

INTRODUCTION

In view of the recent amendment made in the Patents Act, 1970 by the Patents (Amendment) Act, 2005 effective from 01st January 2005, the Official Journal of The Patent Office is required to be published under the Statute. This Journal is being published on weekly basis on every Friday covering the various proceedings on Patents as required according to the provision of Section 145 of the Patents Act 1970. All the enquiries on this Official Journal and other information as required by the public should be addressed to the Controller General of Patents, Designs & Trade Marks. Suggestions and comments are requested from all quarters so that the content can be enriched.

(Rajiv Aggarwal)
CONTROLLER GENERAL OF PATENTS, DESIGNS & TRADE MARKS

24th JULY, 2015

CONTENTS

THE PATENT OFFICE
KOLKATA, 24/07/2015
Address of the Patent Offices/Jurisdictions
The following are addresses of all the Patent Offices located at different places having their Territorial Jurisdiction on a Zonal basis as shown below:-

1	Office of the Controller General of Patents, Designs & Trade Marks, Boudhik Sampada Bhavan, Near Antop Hill Post Office,S.M.Road,Antop Hill, Mumbai – 400 037 Phone: (91)(22) 24123311, Fax : (91)(22) 24123322 E-mail: cgpdtm@nic.in	4	The Patent Office, Government of India, Intellectual Property Rights Building, G.S.T. Road, Guindy, Chennai – 600 032. Phone: (91)(44) 2250 2081-84 Fax : (91)(44) 2250 2066 E-mail: chennai-patent@nic.in ❖ The States of Andhra Pradesh, Telangana, Karnataka, Kerala, Tamil Nadu and the Union Territories of Puducherry and Lakshadweep.
2	The Patent Office, Government of India, Boudhik Sampada Bhavan, Near Antop Hill Post Office,S.M.Road,Antop Hill, Mumbai – 400 037 Phone: (91)(22) 24137701 Fax: (91)(22) 24130387 E-mail: mumbai-patent@nic.in ❖ The States of Gujarat, Maharashtra, Madhya Pradesh, Goa and Chhattisgarh and the Union Territories of Daman and Diu & Dadra and Nagar Haveli	5	The Patent Office (Head Office), Government of India, Boudhik Sampada Bhavan, CP-2, Sector –V, Salt Lake City, Kolkata- 700 091 Phone: (91)(33) 2367 1943/44/45/46/87 Fax: (91)(33) 2367 1988 E-Mail: kolkata-patent@nic.in ❖ Rest of India
3	The Patent Office, Government of India, Boudhik Sampada Bhavan, Plot No. 32., Sector-14, Dwarka, New Delhi – 110075 Phone: (91)(11) 2808 1921 – 25 Fax: (91)(11) 2808 1920 & 2808 1940 E.mail: delhi-patent@nic.in ❖ The States of Haryana, Himachal Pradesh, Jammu and Kashmir, Punjab, Rajasthan, Uttar Pradesh, Uttaranchal, Delhi and the Union Territory of Chandigarh.		

Website: www.ipindia.nic.in
www.patentoffice.nic.in

All applications, notices, statements or other documents or any fees required by the Patents Act, 1970 and The Patents (Amendment) Act, 2005 or by the Patents (Amendment) Rules, 2006 will be received only at the appropriate offices of the Patent Office.

Fees: The Fees may either be paid in cash or may be sent by Bank Draft or Cheques payable to the Controller of Patents drawn on a scheduled Bank at the place where the appropriate office is situated.

पेटेंट कार्यालय

कोलकाता, दिनांक 24/07/2015

• कार्यालयों के क्षेत्राधिकार के पते

विभिन्न जगहों पर स्थित पेटेंट कार्यालय के पते आंचलिक आधार पर दर्शित उनके प्रादेशिक अधिकार क्षेत्र के साथ नीचे दिए गए है:-

1	कार्यालय : महानियंत्रक, एकस्व, अभिकल्प तथा व्यापार चिहन, एंटोप हिल डाकघर के समीप, एस. एम. रोड, एंटोप हिल, मुम्बई- 400 037, भारत, फोन: (91) (22) 24123311 फ़ैक्स: (91) (22) 24123322 ई. मेल: cgpdtm@nic.in	4	पेटेंट कार्यालय, भारत सरकार इंटेलेक्चुअल प्रॉपर्टी राइट्स बिल्डिंग, इंडस्ट्रियल इस्टेट एसआईडीसीओ आरएमडी गोडाउन एरिया एडजसेन्ट टु ईगल फ्लास्क, जी. एस. टी. रोड, गायन्डी चेन्नई - 600 032. फोन: (91)(44) 2250 2081-84 फ़ैक्स: (91)(44) 2250-2066 ई. मेल: chennai-patent@nic.in ❖ आन्ध्र प्रदेश, तेलंगाना, कर्नाटक, केरल, तमिलनाडु तथा पुडुचेरी राज्य क्षेत्र एवं संघ शासित क्षेत्र, लक्षदीप
2	पेटेंट कार्यालय, भारत सरकार बौद्धिक संपदा भवन, एंटोप हिल डाकघर के समीप, एस. एम. रोड, एंटोप हिल, मुम्बई- 400 037, फोन: (91) (22) 24137701 फ़ैक्स: (91) (22) 24130387 ई. मेल: Mumbai-patent@nic.in ❖ गुजरात, महाराष्ट्र, मध्य प्रदेश, गोवा तथा छत्तीसगढ़ राज्य क्षेत्र एवं संघ शासित क्षेत्र, दमन तथा दीव, दादर और नगर हवेली•	5	पेटेंट कार्यालय, भारत सरकार कोलकाता, (प्रधान कार्यालय) बौद्धिक संपदा भवन, सीपी-2, सेक्टर- V, साल्ट लेक सिटी, कोलकाता-700 091, भारत. फोन: (91)(33) 2367 1943/44/45/46/87 फ़ैक्स:/Fax: (91)(33) 2367 1988 ई. मेल: kolkata-patent@nic.in ❖ भारत का अवशेष क्षेत्र
3	पेटेंट कार्यालय, भारत सरकार बौद्धिक संपदा भवन, प्लॉट सं. 32, सेक्टर- 14, द्वारका, नई दिल्ली- 110 075. फोन: (91)(11) 2808 1921-25 फ़ैक्स: (91)(11) 2808 1920, 2808 1940 ई. मेल: delhi-patent@nic.in हरियाणा, हिमाचल प्रदेश, जम्मू तथा कश्मीर, पंजाब,राजस्थान, उत्तर प्रदेश, दिल्ली तथा उत्तरांचल राज्य क्षेत्रों, एवं संघ शासित क्षेत्र चंडीगढ़		

वेबसाइट: http://www.ipindia.nic.in

www.patentoffice.nic.in

पेटेंट अधिनियम, 1970 तथा पेटेंट (संशोधन) अधिनियम, 2005 अथवा पेटेंट (संशोधन) नियम, 2006 द्वारा वांछित सभी आवेदन, सूचनाए, विवरण या अन्य दस्तावेज़ या कोई शुल्क पेटेंट कार्यालय के केवल उपयुक्त कार्यालय में स्वीकृत होंगे।

शुल्क: शुल्क या तो नगद रूप में या Controller of Patents के नाम में देय बैंक ड्राफ्ट या चेक के द्वारा भेजी जा सकती है जो उसी स्थान के किसी अनुसूचित बैंक में प्रदत्त हो जहाँ उपयुक्त कार्यालय स्थित है ।

SPECIAL NOTICE

18 Months publication as required under Section 11A of the Patents Act, 1970 as amended by the Patents (Amendment) Act, 2005.

Notice is hereby given that any person at any time before the grant of Patent may give representation by way of opposition to the Controller of Patents at appropriate office on the ground and in a manner specified under section 25(1) of the Patents (Amendment) Act, 2005 read with Rule 55 of the Patents (Amendment) Rules, 2006.

Notice is also given that if any interested person requests for copies of the complete specification, drawing and abstract of any application already published, the photocopy of the same can be supplied by the Patent Office as per the jurisdiction on payment of prescribed fees of Rs.8/- per page. If any further details are required to be obtained, the same can be provided by the respective Patent Offices on request.

(Rajiv Aggarwal)
CONTROLLER GENERAL OF PATENTS, DESIGNS & TRADE MARKS

SPECIAL NOTICE

Under the new provision of the Patents Act, 1970 as amended by the Patents (Amendment) Act, 2005 and Rules there under, Publication of the matter relating to Patents in the Official Gazette of India Part III, Section 2 has been discontinued and instead The Official Journal of the Patent Office is being published containing all the activities of The Patent Office such as publication of all the patent applications after 18th months , grant of patents & all other information in respect of the proceedings as required under the provisions of the Patents (Amendment) Act, 2005 and Rules thereunder on weekly basis on every **Friday**.

The Journal is uploaded in the website every Friday. So Paper form and CD-ROM form of the Journal are discontinued from 01/01/2009.

SPECIAL NOTICE

Every effort is being taken to publish all the patent applications under section 11(A) of the Patents Act. However, if duplication of publication of any application is found, then earlier date of publication will be taken for the purpose of provisional protection for applicant and Patent Office will grant Patent not before six months from the date of second publication, provided that there is there is no third party representation.

Early Publication:

The following patent applications have been published under section 11A (2) of The Patents (Amendment) Act 2005 and rule 24A of The Patents (Amendment) Rules, 2006. Any person may file representation by way of opposition to the Controller of Patents at the appropriate office against the grant of the patent in the prescribed manner under section 25(1) of the Patents (Amendment) Act 2005 read with the rule 55 of The Patents (Amendment) Rules, 2006:

(12) PATENT APPLICATION PUBLICATION

(21) Application No.2657/MUM/2015 A

(19) INDIA

(22) Date of filing of Application :14/07/2015

(43) Publication Date : 24/07/2015

(54) Title of the invention : A SYSTEM AND METHOD FOR MANAGEMENT OF PAYMENT PROTOCOLS BY CHECKS IN AN ELECTRONIC MANNER

(51) International classification	:G06F 17/00	(71)**Name of Applicant :** **1)NARESH LAXMINARAYAN GROVER** Address of Applicant :245H, Raj Laxmi Marg, Civil Lines, Nagpur Maharashtra India
(31) Priority Document No	:NA	
(32) Priority Date	:NA	
(33) Name of priority country	:NA	(72)**Name of Inventor :** **1)NARESH LAXMINARAYAN GROVER**
(86) International Application No	:NA	
Filing Date	:NA	
(87) International Publication No	: NA	
(61) Patent of Addition to Application Number	:NA	
Filing Date	:NA	
(62) Divisional to Application Number	:NA	
Filing Date	:NA	

(57) Abstract :
The present invention discloses about a system and method for making payment protocols or architectures by managing checks in an electronic manner wherein the said checks are authenticated by face detection or Voice recognition or Finger print matching means. The facial image or the voice to be detected provides a platform for biometric digital signature. The first facial image or voice detected by the detection device may be compared by the second facial image/s or voice/s present in the user device or the server. The present invention may be a software or an application which may be executed on a mobile or computer or the like. The payer will generate and send the check to the payee™s user device. The payee may deposit the received check through the user device.

No. of Pages : 23 No. of Claims : 16

(12) PATENT APPLICATION PUBLICATION
(21) Application No.2658/MUM/2015 A
(19) INDIA
(22) Date of filing of Application :14/07/2015
(43) Publication Date : 24/07/2015

(54) Title of the invention : A SYSTEM FOR PROVIDING FREE SMS/ INTERNET DOWNLOAD ON USER™S DEVICE

(51) International classification	:H04L 29/06
(31) Priority Document No	:NA
(32) Priority Date	:NA
(33) Name of priority country	:NA
(86) International Application No	:NA
Filing Date	:NA
(87) International Publication No	: NA
(61) Patent of Addition to Application Number	:NA
Filing Date	:NA
(62) Divisional to Application Number	:NA
Filing Date	:NA

(71)**Name of Applicant :**
1)Naresh Laxminarayan Grover
Address of Applicant :245 H, Raj Laxmi Marg, Civil Lines, Nagpur- Maharashtra, India
(72)**Name of Inventor :**
1)Naresh Laxminarayan Grover

(57) Abstract :
The present disclosure relates to a system and method which enabling transfer of data to user device over a digital network characterized in that a cost is not attributed for the transfer of such data packet to the user. The application also transfer the data with high bandwidth without applying charge in case of roaming. The charges of downloading will not be applicable to a receiver if the data is transferred from user who use the application for downloading.

No. of Pages : 23 No. of Claims : 24

(12) PATENT APPLICATION PUBLICATION
(21) Application No.3923/MUM/2014 A
(19) INDIA
(22) Date of filing of Application :07/12/2014
(43) Publication Date : 24/07/2015

(54) Title of the invention : A LIQUID SEAL FOR DIVERTING FLARED GAS

(51) International classification	:C08F 2/01
(31) Priority Document No	:NA
(32) Priority Date	:NA
(33) Name of priority country	:NA
(86) International Application No	:NA
Filing Date	:NA
(87) International Publication No	: NA
(61) Patent of Addition to Application Number	:NA
Filing Date	:NA
(62) Divisional to Application Number	:NA
Filing Date	:NA

(71)**Name of Applicant :**
1)Yogesh Karnik
Address of Applicant :A-504, Aditya Park, Chatrapati Shivaji Road, Dahisar (E), Mumbai 400068, Maharashtra India
2)Padam Singh
(72)**Name of Inventor :**
1)Yogesh Karnik
2)Padam Singh

(57) Abstract :
A liquid seal for diverting flared gas according to this invention consists of a U shaped flare line pipe having, one arm of the U shape as an outside/upstream arm connected to the flare line pipe collecting all the gas from various points in the plant; and another arm of the said U shaped flare line pipe opening inside the flare stack as inside/downstream arm. The inside arm/downstream arm of the U shaped flare line pipe extends above the level of the liquid present inside the flare stack. The connection of the U shaped flare line pipe™s outside /upstream and inside/downstream arm happens at the bottom part of this U shaped pipe. The inside/downstream arm of the U shaped flare line pipe consists of a nozzle provided with openings directing the flow away from flare tip of the flare stack. This ensures that the liquid discharged out of these openings is directed away from flare tip of the flare stack and away from the flare burning at the top of the stack, in order to prevent extinguishing of flare.

No. of Pages : 10 No. of Claims : 2

(12) PATENT APPLICATION PUBLICATION
(21) Application No.2572/MUM/2015 A
(19) INDIA
(22) Date of filing of Application :04/07/2015
(43) Publication Date : 24/07/2015

(54) Title of the invention : COOLING PIPE ARRANGEMENT FOR OPENWEELL SUBMERSIBLE PUMP

(51) International classification	:F04D 29/08
(31) Priority Document No	:NA
(32) Priority Date	:NA
(33) Name of priority country	:NA
(86) International Application No	:NA
Filing Date	:NA
(87) International Publication No	: NA
(61) Patent of Addition to Application Number	:NA
Filing Date	:NA
(62) Divisional to Application Number	:NA
Filing Date	:NA

(71)**Name of Applicant :**
1)Shakti Pumps (I) Ltd
Address of Applicant :Shakti Pumps (I) Ltd. Plot No. 401, Sector - 3, Pithampur - 454774, Dist. - Dhar ,Madhya Pradesh India
(72)**Name of Inventor :**
1)DINESH PATIDAR

(57) Abstract :
Flexible Cooling pipe system use to transfer pressurized water from pump housing to over the motor in the form of water jet. Water jet strike over the motor & increase the flow of water around the motor, high flow rate of water increase the heat bearing capacity of the water & increase the rate of heat transfer from motor to water & reduce the temperature of the motor. Assembly consists of Male connector welded in pump housing having threads in outer surface. Female connector fixed with flexible hose pipe having inner threads which is screwed over the male connector, Flexible hose pipe cover throughout length of the motor. Clamping strip bolted at Pump Base & Upper Housing use to hold, protect & guide the hose pipe.

No. of Pages : 10 No. of Claims : 10

(12) PATENT APPLICATION PUBLICATION
(21) Application No.2709/MUM/2014 A
(19) INDIA
(22) Date of filing of Application :25/08/2014
(43) Publication Date : 24/07/2015

(54) Title of the invention : KAI WIPER

(51) International classification	:B60L 11/18
(31) Priority Document No	:NA
(32) Priority Date	:NA
(33) Name of priority country	:NA
(86) International Application No	:NA
Filing Date	:NA
(87) International Publication No	: NA
(61) Patent of Addition to Application Number	:NA
Filing Date	:NA
(62) Divisional to Application Number	:NA
Filing Date	:NA

(71)**Name of Applicant :**
1)DEVILAL LILHARE
Address of Applicant :WARD NO.16, NEAR TELEPHONE EXCHANGE, BHARWELI, TAH & DISTT. BALAGHAT (M.P.) 481102 Madhya Pradesh India
(72)**Name of Inventor :**
1)DEVILAL LILHARE

(57) Abstract :
The Kai Wiper is invented as per requirement of work of removal the Green Kai which are not possible to removed by plain wiper due to taking unnecessary more time and labour as well as difficulty in rubbing the surface by sitting with different position and angle causes so many difficulties appears in body either adults or senior.ln practice, it becomes a more difficult job to clean the weted, moistured and muddy, fine sleeping dust everyday. This device is very simple to handling by everybody will be available at anywhere on reasonable cost. At present, in all localities, new decorative fancy floor and courtyard in small and smallest area are constructed and the problems will be created simultaneously to protect the properly and these finishing, it is naturally required the fixture or devices as well as the saving of time, labour and most important factor is avoiding the injury of health

No. of Pages : 6 No. of Claims : 5

(12) PATENT APPLICATION PUBLICATION
(21) Application No.2237/MUM/2015 A
(19) INDIA
(22) Date of filing of Application :10/06/2015
(43) Publication Date : 24/07/2015

(54) Title of the invention : 'A METHOD OF IN-VITRO MATURATION OF SPERMATID, MEDIA THEREOF AND METHOD OF PREPARATION OF MEDIA '

(51) International classification	:C12N 5/076
(31) Priority Document No	:NA
(32) Priority Date	:NA
(33) Name of priority country	:NA
(86) International Application No	:NA
Filing Date	:NA
(87) International Publication No	: NA
(61) Patent of Addition to Application Number	:NA
Filing Date	:NA
(62) Divisional to Application Number	:NA
Filing Date	:NA

(71)**Name of Applicant :**
1)Patel Nayna Hiteshbhai
Address of Applicant :Sat Kaival Hospital Pvt. Ltd. Naya Padkar Lane, Station Road, Anand - 388001 Gujarat, India
2)Bhadarka Harsha Karshan
(72)**Name of Inventor :**
1)Patel Nayna Hiteshbhai
2)Bhadarka Harsha Karshan

(57) Abstract :
A method of in-vitro maturation of spermatid, media thereof and method of preparation of media • The present invention describes a method of in-vitro maturation of spermatid, media thereof and method of preparation of media. It particularly relates to a culture the spermatid. The culture media comprises Dulbecco™s Modified Eagle Medium (DMEM), non-essential amino acid, fetal bovine serum (FBS) and penicillin-streptomycin as antibiotics. The testicular biopsy is incubated in culture medium at required temperature for 24-65 hours. This method provides the viable result for non-obstructive azoospermia patients and overcome the infertility in male.

No. of Pages : 20 No. of Claims : 6

(12) PATENT APPLICATION PUBLICATION
(19) INDIA
(22) Date of filing of Application :09/07/2014
(21) Application No.2238/MUM/2014 A
(43) Publication Date : 24/07/2015

(54) Title of the invention : DEVELOPMENT OF GREEN INSULATION BOARD USING PULVERIZED PLANT LEAVES

(51) International classification	:C10L 5/40
(31) Priority Document No	:NA
(32) Priority Date	:NA
(33) Name of priority country	:NA
(86) International Application No	:NA
Filing Date	:NA
(87) International Publication No	: NA
(61) Patent of Addition to Application Number	:NA
Filing Date	:NA
(62) Divisional to Application Number	:NA
Filing Date	:NA

(71)**Name of Applicant :**
1)AKASH B. PANDEY
Address of Applicant :C-57, VRUND RESIDENCY, B/H KUNJVILLA TOWNSHIP, NR. C. K. PRAJAPATI SCHOOL, LAXMIPURA-ANKODIA ROAD, GORWA, VADODARA-390016, GUJARAT, INDIA.
2)KHUSHAL Y. MAHALE
3)JIMIL M. SHAH
(72)**Name of Inventor :**
1)AKASH B. PANDEY
2)KHUSHAL Y. MAHALE
3)JIMIL M. SHAH

(57) Abstract :
This work tests a way to better utilize renewable agricultural products that, will increase revenue for agricultural producers, decrease the amount and cost of disposal of non-renewable products, and decrease the amount of non-renewable products that need to be produced. In this patent the insulating ability of dry banana leaf powder using polyester resin as binder is explored. In order to use banana leaf as the main constituent material for the insulation, seasoning/drying is essential to prepare the powder raw material. This pulverized raw material is pressed at varying loads and with varying proportion of banana leaf powder content in binder employed to produce single layered plain thermal insulating board. It can be concluded that this insulation boards from banana leaf pulverized powder are presenting a good opportunity for use as insulating material for energy saving while also being environmentally friendly. Additionally, these insulation boards could be used to produce furniture with an advantage to get rid of weeds.

No. of Pages : 14 No. of Claims : 8

(12) PATENT APPLICATION PUBLICATION
(21) Application No.2588/MUM/2015 A
(19) INDIA
(22) Date of filing of Application :07/07/2015
(43) Publication Date : 24/07/2015

(54) Title of the invention : SOLAR POWERED STUDY LAMP

(51) International classification	:B60Q 1/14	
(31) Priority Document No	:NA	
(32) Priority Date	:NA	
(33) Name of priority country	:NA	
(86) International Application No	:NA	
Filing Date	:NA	
(87) International Publication No	: NA	
(61) Patent of Addition to Application Number	:NA	
Filing Date	:NA	
(62) Divisional to Application Number	:NA	
Filing Date	:NA	

(71)**Name of Applicant :**
1)E. S. BALASUBRAMANIAN
Address of Applicant :KHANNA ESTATE, LBS MARG, VIKHROLI (WEST), MUMBAI - 400 079. Maharashtra India
2)SHIVAKUMAR SARAVANAN
3)MOHAN V. KAMAT
4)ANIL M. KAMAT
5)SUDHA M. KAMAT
6)MARKS ALELI (I) PVT. LTD.,PARTNERS TRADING AS M/S. MG SOLAR POWERTRONICS LLP
(72)**Name of Inventor :**
1)E. S. BALASUBRAMANIAN

(57) Abstract :
The invention consists of Solar PV Panel, Light source encased in a ABS plastic casing, DC to DG converter, Storage device, Integrated circuit having features to control the charging/discharging of the storage device, Push button to put the light source ON/OFF, Tri color LED to indicate the state of the storage device, such that solar power is converted into DC power using Solar PV Panel and stored in storage device whose charging or discharging is controlled by integrated circuit and when push button is depressed, integrated circuit delivers the power to the light source and light source emits light. In another aspect, this invention consists of a goose neck connection. In yet another aspect, this invention consists the DC-DC converter that ensures low output ripple. In yet another aspect, this invention consists a high frequency circuit that ensures that the electronic components in the PCB have smaller size. In yet another aspect, this invention consist of a low standby current. In yet another aspect, this invention consist the Tri color LED which shows orange indicator when the storage device is charging and green indicator when the storage device is 100% charged and red indicator when the storage device is 100% discharged;

No. of Pages : 9 No. of Claims : 8

(12) PATENT APPLICATION PUBLICATION
(21) Application No.1279/MUM/2015 A
(19) INDIA
(22) Date of filing of Application :31/03/2015
(43) Publication Date : 24/07/2015

(54) Title of the invention : MAGNETIC ARRANGEMENT FOR MOLDED CASE CIRCUIT BREAKER

(51) International classification	:H01H 23/00
(31) Priority Document No	:NA
(32) Priority Date	:NA
(33) Name of priority country	:NA
(86) International Application No	:NA
Filing Date	:NA
(87) International Publication No	: NA
(61) Patent of Addition to Application Number	:NA
Filing Date	:NA
(62) Divisional to Application Number	:NA
Filing Date	:NA

(71)**Name of Applicant :**
1)Larsen & Toubro Limited
Address of Applicant :L & T House, Ballard Estate, P.O. Box No. 278, Mumbai 400 001, Maharashtra, India
(72)**Name of Inventor :**
1)RAMASAMY, Veerasamy

(57) Abstract :
The present disclosure relates to short-circuit protection magnetic switch of a thermo-magnetic release of molded case circuit breakers/circuit breakers The present disclosure provides a magnetic release that can be adjusted for low short circuit currents without need of reducing air gap between the moving and fixed core to unacceptably small values thus enabling use of existing circuit breakers for low short circuit currents that were not feasible earlier. In an embodiment, a coil is used to increase ampere turns of fixed core so as to increase the magnetic force even at low short circuit currents. In an aspect, the coil is pre-wound and inserted over a cylindrical core and two ends of the cylindrical core are riveted to two limbs of the thermo-magnetic release. In another aspect, pre-wound coil prevents effect on productivity as it can be prepared separately and has to be merely inserted over the cylindrical core.

No. of Pages : 20 No. of Claims : 7

(12) PATENT APPLICATION PUBLICATION
(21) Application No.2251/MUM/2014 A
(19) INDIA
(22) Date of filing of Application :10/07/2014
(43) Publication Date : 24/07/2015

(54) Title of the invention : SYNTHESIS OF BIOCOMPATIBLE NANOFLUIDS BASED ON NI0.5ZN0.5FE2O4 NANOPARTICLES FOR CANCER HYPERTHERMIA THERAPY

(51) International classification	:A61K 49/18
(31) Priority Document No	:NA
(32) Priority Date	:NA
(33) Name of priority country	:NA
(86) International Application No	:NA
Filing Date	:NA
(87) International Publication No	: NA
(61) Patent of Addition to Application Number	:NA
Filing Date	:NA
(62) Divisional to Application Number	:NA
Filing Date	:NA

(71)**Name of Applicant :**
1)D.Y. PATIL UNIVERSITY, KOLHAPUR
Address of Applicant :869, E, D.Y. PATIL VIDYANAGAR, KASABA BAWADA, KOLHAPUR-416006, MAHARASHTRA, INDIA.
(72)**Name of Inventor :**
1)DR. S. H. PAWAR
2)DR. MANISHA R. PHADATARE

(57) Abstract :
The present invention relates to a simple and cost effective preparation of Ni0.5Zn0.5Fe2O4 nanofluid for hyperthermia therapy using a simple combustion method using nickel nitrate (Ni (N03)2.6H20), zinc nitrate (Zn (NO3)2.6H20), and ferric nitrate (Fe (NO3)3.9H20) and glycine (CH2NH2COOH) at the stoichiometric condition wherein glycine is used as a fuel and nitrates of metal (Ni, Zn and Fe) as oxidants. Further, the present invention discloses the preparation of stable suspension of nanoparticles, wherein the biocompatible nanofluid are prepared using the Ni0.5Zn0.5Fe2O4 nanoparticles and Acrypol 934 which acts a cross-linked polyacrylic acid. Further the present invention as discloses induction heating of Ni0.5Zn0.5Fe2O4 nanoparticles for hyperthermia application.

No. of Pages : 17 No. of Claims : 5

(12) PATENT APPLICATION PUBLICATION
(21) Application No.2252/MUM/2014 A
(19) INDIA
(22) Date of filing of Application :10/07/2014
(43) Publication Date : 24/07/2015

(54) Title of the invention : PREPARATION OF NANOFLUID BASED ON CORE-SHELL FERRIMAGNETIC NANO-PARTICLES

(51) International classification	:C01B 31/04
(31) Priority Document No	:NA
(32) Priority Date	:NA
(33) Name of priority country	:NA
(86) International Application No	:NA
Filing Date	:NA
(87) International Publication No	: NA
(61) Patent of Addition to Application Number	:NA
Filing Date	:NA
(62) Divisional to Application Number	:NA
Filing Date	:NA

(71)**Name of Applicant :**
1)D.Y. PATIL UNIVERSITY, KOLHAPUR
Address of Applicant :869, E, D. Y. PATIL VIDYANAGAR, KASABA BAWADA, KOLHAPUR-416006, Maharashtra, India
(72)**Name of Inventor :**
1)DR. S. H. PAWAR
2)DR. VISHWAJEET MAHIPAT KHOT

(57) Abstract :
The present invention discloses a composition of core-shell ferrimagnetic nanoparticles and a method of preparing core-shell ferrimagnetic nanoparticles with broad size distribution exhibiting high self-heating temperature rise and applications thereof. It further relates to the care of comoosite particles consisting of ferrites with trivalent ferric and bivalent magnesium, and their shell portion coated with polyethylene glycol, polyvinyl alcohol and, dextran. It further relates to the core-shell ferrimagnetic nanoparticles having an average diameter of 20-50 nm. It further relates to the application of these core-shell ferrimagnetic nanoparticles as in-vivo cancer hyperthermia agents.

No. of Pages : 22 No. of Claims : 5

(12) PATENT APPLICATION PUBLICATION
(19) INDIA
(22) Date of filing of Application :10/07/2014
(21) Application No.2253/MUM/2014 A
(43) Publication Date : 24/07/2015

(54) Title of the invention : PREPARATION OF NANO-POLYMER FOR THE TREATMENT OF NON-HEALING AND DIABETIC WOUNDS AND TISSUE ENGINEERING APPLICATION

(51) International classification	:C07K 16/00
(31) Priority Document No	:NA
(32) Priority Date	:NA
(33) Name of priority country	:NA
(86) International Application No	:NA
Filing Date	:NA
(87) International Publication No	: NA
(61) Patent of Addition to Application Number	:NA
Filing Date	:NA
(62) Divisional to Application Number	:NA
Filing Date	:NA

(71)**Name of Applicant :**
1)D.Y. PATIL UNIVERSITY, KOLHAPUR
Address of Applicant :869, E, D.Y. PATIL VIDYANAGAR, KASABA BAWADA, KOLHAPUR-416006, Maharashtra, India
2)STEMPLUS BIOTECH PVT. LTD.
(72)**Name of Inventor :**
1)DR. MEGHNAD G. JOSHI
2)MRS. YOGITA K. VELANKAR
3)ALLAUDDIN H. MUJAWAR

(57) Abstract :
The present invention relates to the preparation of a wound healing composition of nanopolymer comprising PEG, PVA and platelet growth factors which gives complete healing to the chronic/ non-healing, diabetic and burn wounds with minimum or nearly scar less healing and its application on the affected site provide healing of the chronic or diabetic wounds completely.

No. of Pages : 30 No. of Claims : 7

(12) PATENT APPLICATION PUBLICATION
(21) Application No.2492/MUM/2015 A
(19) INDIA
(22) Date of filing of Application :30/06/2015
(43) Publication Date : 24/07/2015

(54) Title of the invention : A SHELL LEAF TYPE AUTOMATIC RADIAL GATE SYSTEM FOR BARRAGES AND WEIRS

(51) International classification	:B01D21/22	(71)**Name of Applicant :**
(31) Priority Document No	:NA	**1)GODBOLE PRASHANT PRABHAKAR**
(32) Priority Date	:NA	Address of Applicant :2/B, BUTY PLOTS, DHARAMPETH,
(33) Name of priority country	:NA	NAGPUR-440 010, MAHARASHTRA STATE, INDIA
(86) International Application No	:NA	(72)**Name of Inventor :**
Filing Date	:NA	**1)GODBOLE PRASHANT PRABHAKAR**
(87) International Publication No	: NA	
(61) Patent of Addition to Application Number	:NA	
Filing Date	:NA	
(62) Divisional to Application Number	:NA	
Filing Date	:NA	

(57) Abstract :
A shell leaf type automatic radial gate system 100 for barrages and weirs, said gate system comprising: A set of anchor supports 110, each set of said anchor supports having components projecting out in the opening at one end and embedded in RCC piers & 110b and weir body wall at other end; A shell type movable gate leaf 120 for regulating outflow through the said opening, wherein the said gate leaf disposed in opening in an operative configuration attains : ■ a closed position to prevent flow of water when upstream water level is below a first pre-determined level ■ a fully open position to permit full flow of water, when upstream water level is above a third pre-determined level and below a second predetermined level; ■ at least one partially open position between the said closed and fully open positions to permit partial flow of water, when upstream water level ranges from the said first pre-determined level to said third predetermined level; and comprises curved upstream and downstream skin plates, flat top & bottom skin plates, a plurality of vertical & horizontal stiffeners, a pair of end girders and end arms, a pair of trunnion hubs with bush bearings, a pair of curved track bases & inclined supports, an upper and a lower gate hoisting bracket; a sealing arrangement 140 for enabling the said gate leaf to store water in closed position; a pair of trunnion assemblies 150a and 150b to support and facilitate rotational movement of said gate leaf during opening and closing operations; a pair of anti-hunting cum uni-directional self locking devices 160a and 160b to prevent flow induced oscillations and allowing uni-directional opening movement of the said gate leaf during its opening and closing operations; and an emergency mechanical hoisting system 190 for facilitating manual opening and closing operations of the said gate leaf when upstream water level is below the first pre-determined level wherein the said shell type gate leaf opens out in response to rise in upstream water level and retains its fully open position even after getting fully submerged during heavy floods when installed on weirs and barrages; wherein pair of uni-directional locking devices is adapted to enable unidirectional movement of said gate leaf from closed to partially open to fully open position, thus preventing its oscillations under action of flow disturbances; and wherein the said emergency mechanical hoisting system is adapted to move the said gate leaf from closed to partially open position and further to fully open position when upstream water level is lower than the first pre-determined level.

No. of Pages : 61 No. of Claims : 5

(12) PATENT APPLICATION PUBLICATION
(19) INDIA
(22) Date of filing of Application :28/04/2014
(21) Application No.1481/MUM/2014 A
(43) Publication Date : 24/07/2015

(54) Title of the invention : PROGRAMMABLE MICROWAVE OVEN WITH INGREDIENTS AND RECIPE CONTROL

(51) International classification	:G06F 17/00
(31) Priority Document No	:NA
(32) Priority Date	:NA
(33) Name of priority country	:NA
(86) International Application No	:NA
Filing Date	:NA
(87) International Publication No	: NA
(61) Patent of Addition to Application Number	:NA
Filing Date	:NA
(62) Divisional to Application Number	:NA
Filing Date	:NA

(71)**Name of Applicant :**
1)KU. ANURADHA DILIP INGOLE
Address of Applicant :57, RATHI NAGAR, NEAR VISION COMPUTER CENTER, AMRAVATI-444603, (M.S.), INDIA.
2)MIR SADIQ ALI
(72)**Name of Inventor :**
1)KU. ANURADHA DILIP INGOLE
2)MIR SADIQ ALI

(57) Abstract :
The commercially available domestic electric microwave ovens allow users to set time/temperature as per the instructions and guidel ines provided by the manufacturers. In some cases, the recipes are pre-defined and user needs not to set the temperature/time. There is no such microwave oven available in the market that can suggest the ingredients of recipe. The present invention relates to development of the microcontroller based smart electric oven system that suggests the ingredients and recipe control based on the number of persons. The invention is described with the help of block diagram. Figure 1 show various components used in the programmable microwave oven system.

No. of Pages : 8 No. of Claims : 1

(12) PATENT APPLICATION PUBLICATION
(21) Application No.2292/MUM/2014 A
(19) INDIA
(22) Date of filing of Application :14/07/2014
(43) Publication Date : 24/07/2015

(54) Title of the invention : EDIBLE GULAL/EDIBLE CELEBRATION GULAL

(51) International classification	:A23G 1/00
(31) Priority Document No	:NA
(32) Priority Date	:NA
(33) Name of priority country	:NA
(86) International Application No	:NA
Filing Date	:NA
(87) International Publication No	: NA
(61) Patent of Addition to Application Number	:NA
Filing Date	:NA
(62) Divisional to Application Number	:NA
Filing Date	:NA

(71)**Name of Applicant :**
1)UMANG GOYAL
Address of Applicant :SARDAR PATEL, TIMBER MARKET, BHANPURI, RAIPUR, (C.G.) Chattisgarh India
2)ABHAY GOYAL
(72)**Name of Inventor :**
1)UMANG GOYAL
2)ABHAY GOYAL

(57) Abstract :
The present invention relates to Edible Gulal/ Edible Celebration Gulal prepared in powder form which is complety safe for all age group for external or any type of use and most importantly it is edible also. Being edible it provides a sense of complete safety which is readily acceptable and it does not harm skin or any part of body. All the ingredients which are used in preparation Of the present invention are very common, naiural and are very readily available, milk being the main ingredient and certified edible colours and natural edible flavours being the other ingredient. Most importantly, present invention does not affect our body in any way.

No. of Pages : 8 No. of Claims : 4

(12) PATENT APPLICATION PUBLICATION
(21) Application No.2293/MUM/2014 A
(19) INDIA
(22) Date of filing of Application :14/07/2014
(43) Publication Date : 24/07/2015

(54) Title of the invention : A NOVEL MOBILE CHARGER IN MOTOR BIKE

(51) International classification	:H04B 5/00
(31) Priority Document No	:NA
(32) Priority Date	:NA
(33) Name of priority country	:NA
(86) International Application No	:NA
Filing Date	:NA
(87) International Publication No	: NA
(61) Patent of Addition to Application Number	:NA
Filing Date	:NA
(62) Divisional to Application Number	:NA
Filing Date	:NA

(71)**Name of Applicant :**
1)OWN ALI
Address of Applicant :186/187, RAJ PALACE, FLAT NO.204, KHATIWALA TANK, INDORE, Madhya Pradesh India
(72)**Name of Inventor :**
1)OWN ALI

(57) Abstract :
The present invention relates a novel mobile charger in motor bike attached with the DC battery component of the motorbike in such a way which involves understanding of the mechanical and electronic process of the mobile charger device with its adjustment with the DC motor component of the motor bike designed such that it can take power from any source having terminal voltage between 7.5 V DC to 40 V DC, and can charge almost all smart phone currently available in the market.

No. of Pages : 12 No. of Claims : 4

(12) PATENT APPLICATION PUBLICATION
(21) Application No.2643/MUM/2015 A
(19) INDIA
(22) Date of filing of Application :13/07/2015
(43) Publication Date : 24/07/2015

(54) Title of the invention : MULTI-PURPOSE FRYING MACHINE

(51) International classification	:B26D 7/06
(31) Priority Document No	:NA
(32) Priority Date	:NA
(33) Name of priority country	:NA
(86) International Application No	:NA
Filing Date	:NA
(87) International Publication No	: NA
(61) Patent of Addition to Application Number	:NA
Filing Date	:NA
(62) Divisional to Application Number	:NA
Filing Date	:NA

(71)**Name of Applicant :**
1)Jitesh Vasantrao Deshmukh
Address of Applicant :171, Ambedkar ward no 4, At Po. Kosara Kondha Ta. Pauni Dist. Bhandara 441908 Maharashtra India
2)Dr. Rashmi V. Uddanwadiker
(72)**Name of Inventor :**
1)Jitesh Vasantrao Deshmukh
2)Dr. Rashmi V. Uddanwadiker
3)Vanchanpal Charaqndasji Bhujade

(57) Abstract :
This invention has been started with identification of problems at traditional frying station viz. problems of handling hot frying skimmer, handling oil with various pots, filtration of oil (which they rarely do), maintaining temperature of oil for some fried items and changing the sides of fried items continuously with the help of frying skimmer or spoons one by one. All these problems ultimately lead to fatigue to cook if they operate continuously. In this invention, these problems have been clearly defined and appropriate mechanisms have been proposed. Then design and force analysis of components of mechanisms has been worked out. Then fabrication is done to validate the claims. Experiments show that this new frying machine will be a milestone in Indian frying methods because of its advanced technique. Following invention is described in detail with the help of Figure 1 of sheet 1 showing schematic diagram of multipurpose frying machine.

No. of Pages : 16 No. of Claims : 9

(12) PATENT APPLICATION PUBLICATION
(21) Application No.1990/MUM/2015 A
(19) INDIA
(22) Date of filing of Application :21/05/2015
(43) Publication Date : 24/07/2015

(54) Title of the invention : CONFECTIONERY HAVING POPPING AND COOLING CHARACTERISTICS AND MANUFACTURING METHODS THEREOF

(51) International classification	:A23G 9/34
(31) Priority Document No	:NA
(32) Priority Date	:NA
(33) Name of priority country	:NA
(86) International Application No	:NA
Filing Date	:NA
(87) International Publication No	: NA
(61) Patent of Addition to Application Number	:NA
Filing Date	:NA
(62) Divisional to Application Number	:NA
Filing Date	:NA

(71)**Name of Applicant :**
1)GUJARAT CO-OPERATIVE MILK MARKETING FEDERATION LIMITED
Address of Applicant :AMUL DAIRY ROAD, ANAND 388 001, GUJARAT, INDIA
(72)**Name of Inventor :**
1)MR. SAMEER SAXENA
2)DR. K. RATHNAM

(57) Abstract :
Confectionery having popping and cooling characteristics and manufacturing methods thereof are disclosed. The confectionery has 1% to 25%, preferably, 14% to 16% carbonated crystals by weight and 0.2% to 1%, preferably, 0.3% to 0.5% cooling flavour by weight. The carbonated crystals comprise carbon dioxide, cane sugar, lactose, corn syrup solids, organic powdered sugar encapsulated within cocoa butter. Manufacturing methods for manufacturing milk chocolate, plain chocolate, and vegetable oil based cocoa confection in accordance with the present invention are disclosed.

No. of Pages : 22 No. of Claims : 10

(12) PATENT APPLICATION PUBLICATION
(21) Application No.2304/MUM/2014 A
(19) INDIA
(22) Date of filing of Application :15/07/2014
(43) Publication Date : 24/07/2015

(54) Title of the invention : COMPOSITE BRAKE PAD WITH BAGASSE FIBER.

(51) International classification	:C08H 8/00
(31) Priority Document No	:NA
(32) Priority Date	:NA
(33) Name of priority country	:NA
(86) International Application No	:NA
Filing Date	:NA
(87) International Publication No	: NA
(61) Patent of Addition to Application Number	:NA
Filing Date	:NA
(62) Divisional to Application Number	:NA
Filing Date	:NA

(71)**Name of Applicant :**
1)DESHMUKH NAVJEEVAN BABASAHEB
Address of Applicant :A/P: JAWALE KADLAG, TAL.: SANGAMNER, DIST. : AHMEDNAGAR, -422605 Maharashtra India
(72)**Name of Inventor :**
1)DESHMUKH NAVJEEVAN BABASAHEB

(57) Abstract :
Composite brake pad material is manufactured using calcium carbonate as lubricant, silicon powder as additive, bagasse as a reinforcing fiber, and epoxy resin as a binder. Best result obtains at 40% bagasse, 40% epoxy resin, 10% calcium carbonate and 10% silicon powder. The purpose of this study is to characterize bagasse fibers as potential replacement for asbestos in brake pad. The bagasse fibers has high strength, also it is readily available and economical. This strength of bagasse fibers with suitable binder can be effectively used to manufacture the brake pads. This will be a great innovation which may lead to growth of agricultural field in industrial development as well as it may help to earn foreign exchange. During the test, result obtain are satisfactory. Also it overcomes the disadvantages of composite material like metallic, semi-metallic and ceramic like noise generation during the braking, wear of rotor etc.

No. of Pages : 16 No. of Claims : 5

(12) PATENT APPLICATION PUBLICATION
(21) Application No.5857/CHE/2014 A
(19) INDIA
(22) Date of filing of Application :22/11/2014
(43) Publication Date : 24/07/2015

(54) Title of the invention : SYSTEM AND METHOD FOR INITIATING A CONFERENCE CALL

(51) International classification :H04M
(31) Priority Document No :NA
(32) Priority Date :NA
(33) Name of priority country :NA
(86) International Application No :NA
Filing Date :NA
(87) International Publication No : NA
(61) Patent of Addition to Application Number :NA
Filing Date :NA
(62) Divisional to Application Number :NA
Filing Date :NA

(71)**Name of Applicant :**
1)Lalith Patwa
Address of Applicant :86/2 Tana Street, Purasaiwalkkam, Chennai - 600007, Tamil Nadu India
(72)**Name of Inventor :**
1)Lalith Patwa

(57) Abstract :
The present invention is a system and method for initiating and establishing a one touch conference call along with administrating the facilities provided to the conferees. The administrator or the host controls the initiating device comprising the conference facilitator for accomplishing the conference session with enhanced group calling features to a pre-determined group of connected portfolio at a single touch of a button or a single click of the mouse. The conference session provides features such as allowing new calling devices to participate in the existing conference call at any period and duration, establishing a record of the information shared in the conference session and requisite details as a track history for further requirements, conveying the group information through audio and video tracks during the on-going session, engaging the members of the on-going conference call session during idle mode by initiating a music audio file. The administrator or the host further provides enhanced services such as determining the minimum and maximum number of conferees in the conference session and providing a conference locking mechanism upon the maximum number of conferees is reached. The administrator initiates and sends through the said conferencing interface incorporated in the plurality of calling devices or the initiating device an invitation call to all the devices selected from the stored contact, call log details, conferees of prior conference sessions stored in the history and by typing the contact details through the key pad of the device for participating in the conference session through a single voice call wherein one touch of the accept call by the participant devices involves the conferees in the said conference session. The system provides the enhanced services like notifying the active, inactive and silent conferees through multiple variant colour representations in the touch screen of the application, providing live translator services for translating the speech of the conferees to desired pre-selected language, displaying the upcoming and scheduled conferences along with its agenda in collaboration with the global calendars, hot swap the existing communication line to a secondary pre-registered line upon enduring with inconsistencies and chipping in the duration of any conferees by any other desired conferees by extending their validity period upon satisfying the requisite conditions etc.

No. of Pages : 37 No. of Claims : 11

(12) PATENT APPLICATION PUBLICATION
(21) Application No.3507/CHE/2015 A
(19) INDIA
(22) Date of filing of Application :08/07/2015
(43) Publication Date : 24/07/2015

(54) Title of the invention : FRUIT EXTRACTS FOR INCREASED SOFTNESS AND PROLONGED SHELF LIFE IN BAKERY PRODUCTS AND METHOD THEREOF

(51) International classification :A21D
(31) Priority Document No :NA
(32) Priority Date :NA
(33) Name of priority country :NA
(86) International Application No :NA
Filing Date :NA
(87) International Publication No : NA
(61) Patent of Addition to Application Number :NA
Filing Date :NA
(62) Divisional to Application Number :NA
Filing Date :NA

(71)**Name of Applicant :**
1)VELLANKI KALYAN CHAKRAVARTHY
Address of Applicant :FLAT NO. 837, OLD MIG, BHEL, MEDAK DISTRICT, TELANGANA 500017 India
(72)**Name of Inventor :**
1)VELLANKI KALYAN CHAKRAVARTHY

(57) Abstract :
The invention relates to fruit extracts for improving softness and increased shelf life of bakery products and a method thereof comprising a liquid and/or semi solid mass obtained by processing freshly available fruits, and incorporating said processed fruit mass into the flour of a bakery items and manufacturing of said bakery item. Wherein a semi solid mass processed from freshly available ripe fruits maintains the softness of the bread and holds the moisture content inside the bakery product such that there is no fungal growth over the surface and shelf life of the product is thus increased. In yet another aspect of the invention wherein the fiber and the enzyme content of the natural fruit entraps the moisture and help maintain softness of the bakery product for the longer time by equal distribution of the moisture by the fibers and enzymes in the product

No. of Pages : 10 No. of Claims : 6

(12) PATENT APPLICATION PUBLICATION
(21) Application No.1454/CHE/2015 A
(19) INDIA
(22) Date of filing of Application :23/03/2015
(43) Publication Date : 24/07/2015

(54) Title of the invention : SENSOR BASED ARTIFICIAL LEG

(51) International classification :G01N
(31) Priority Document No :NA
(32) Priority Date :NA
(33) Name of priority country :NA
(86) International Application No :NA
Filing Date :NA
(87) International Publication No : NA
(61) Patent of Addition to Application Number :NA
Filing Date :NA
(62) Divisional to Application Number :NA
Filing Date :NA

(71)**Name of Applicant :**
1)BHARATH UNIVERSITY
Address of Applicant :173, Agharam Road, Selaiyur, Chennai 600 073. Tel : 044-22290742 Tamil Nadu India
(72)**Name of Inventor :**
1)Dr. Bobliee James
2)Dr.Vijayaraghavan
3)Dr.X.Charles
4)Dr.Hameed Hussain

(57) Abstract :
This invention relates to the field of Bio-mechanical devices and more particularly to the development of sensor based leg.

No. of Pages : 13 No. of Claims : 3

(12) PATENT APPLICATION PUBLICATION
(21) Application No.2689/CHE/2015 A
(19) INDIA
(22) Date of filing of Application :28/05/2015
(43) Publication Date : 24/07/2015

(54) Title of the invention : ANTI-TUBERCULAR DRUG NANO-CONJUGATES

(51) International classification :A61K31/00
(31) Priority Document No :NA
(32) Priority Date :NA
(33) Name of priority country :NA
(86) International Application No :NA
Filing Date :NA
(87) International Publication No : NA
(61) Patent of Addition to Application Number :NA
Filing Date :NA
(62) Divisional to Application Number :NA
Filing Date :NA

(71)**Name of Applicant :**
1)Dr. Sarvamangala Dhurjeti
Address of Applicant :Plot no. 308, Visalakshinagar, Visakhapatnam-530043, Andhra Pradesh India
2)Dr. Sathyanarayana Murthy Upadhyayula
3)Nagasejitha Pulakunta
4)Dr. L. Srinivas
(72)**Name of Inventor :**
1)Dr. Sarvamangala Dhurjeti
2)Dr. Sathyanarayana Murthy Upadhyayula
3)Nagasejitha Pulakunta
4)Dr. L. Srinivas

(57) Abstract :
The present invention relates to anti-tubercular nano conjugates having therapeutic efficacy against multidrug resistant strains of tuberculosis bacilli and pharmaceutical compositions comprising the same. The invention further discloses a process for preparing the anti-tubercular nano conjugates.

No. of Pages : 30 No. of Claims : 15

(12) PATENT APPLICATION PUBLICATION
(21) Application No.3428/CHE/2015 A
(19) INDIA
(22) Date of filing of Application :04/07/2015
(43) Publication Date : 24/07/2015

(54) Title of the invention : SYSTEM FOR PLUG-IN TYPE DETACHABLE CONSTANT CURRENT DRIVER ADAPTOR FOR LED TUBE LIGHTS FOR DIFFERENT TYPES OF FIXING OR INSTALLATION

(51) International classification :F21V
(31) Priority Document No :NA
(32) Priority Date :NA
(33) Name of priority country :NA
(86) International Application No :NA
Filing Date :NA
(87) International Publication No : NA
(61) Patent of Addition to Application Number :NA
Filing Date :NA
(62) Divisional to Application Number :NA
Filing Date :NA

(71)**Name of Applicant :**
1)KRISHNA RAVI
Address of Applicant :C/o. Reckon Green Innovations Private Limited, Villa #45, THE TRIALS, Beside Harivillu, Pokkalwada Village, Manikonda, Hyderabad-500089, Telangana, India.
(72)**Name of Inventor :**
1)KRISHNA RAVI

(57) Abstract :
Exemplary embodiments of the present disclosure are directed towards a system for plug-in type detachable constant current driver adaptor for LED tube lights for different types of fixing. The system includes, a first driver embodiment and a second driver embodiment, whereby the first driver embodiment secured to at least one end cap for retrofitting the light emitting diode (LED) tube light of a conventional fixture and whereby the second driver embodiment secured to the end caps and fixed to the LED tube light with the plurality of G13 pins for converting into to wall mounting; and hanging configuration.

No. of Pages : 22 No. of Claims : 7

(12) PATENT APPLICATION PUBLICATION
(21) Application No.3522/CHE/2015 A
(19) INDIA
(22) Date of filing of Application :09/07/2015
(43) Publication Date : 24/07/2015

(54) Title of the invention : DYNAMIC OPTIMIZATION OF BYTECODES

(51) International classification :G06F
(31) Priority Document No :NA
(32) Priority Date :NA
(33) Name of priority country :NA
(86) International Application No :NA
Filing Date :NA
(87) International Publication No : NA
(61) Patent of Addition to Application Number :NA
Filing Date :NA
(62) Divisional to Application Number :NA
Filing Date :NA

(71)**Name of Applicant :**
1)Syscom Corporation Pvt. Ltd.
Address of Applicant :Station HQ, Fort St George, CHENNAI - 600 009, Tamil Nadu India
(72)**Name of Inventor :**
1)Pulkit Jain

(57) Abstract :
In order to avoid static nature of conventional techniques, embodiments of the present disclosure provide a method for dynamic optimization of bytecodes and a device and a computer implemented system thereof.

No. of Pages : 17 No. of Claims : 12

(12) PATENT APPLICATION PUBLICATION
(21) Application No.3533/CHE/2015 A
(19) INDIA
(22) Date of filing of Application :10/07/2015
(43) Publication Date : 24/07/2015

(54) Title of the invention : A SYSTEM & METHOD FOR GETTING MULTITUDE OF CONTROLS FROM A SINGLE CONTROL IN THE USER INTERFACE FOR TOUCH SCREEN CHARACTERIZED DEVICES

(51) International classification	:G06F	(71)**Name of Applicant :**
(31) Priority Document No	:NA	**1)K.T.GANDHI KARUNA**
(32) Priority Date	:NA	Address of Applicant :WATSINIT TECHNOLOGIES PVT
(33) Name of priority country	:NA	LTD, VEL TECH TBI, #42, AVADI VEL TECH ROAD,
(86) International Application No	:NA	AVADI, CHENNAI - 600 062, Tamil Nadu India
Filing Date	:NA	(72)**Name of Inventor :**
(87) International Publication No	: NA	**1)K.T.GANDHI KARUNA**
(61) Patent of Addition to Application Number	:NA	
Filing Date	:NA	
(62) Divisional to Application Number	:NA	
Filing Date	:NA	

(57) Abstract :
A system and method to provide multitude of controls from a single control is presented for touch screen devices user interface. Since touch screen devices are becoming more and more compact the available area for the user interface gets reduced. But the interface requires minimum area for providing all the required functions for the user. Owing to the more compact device like smart watches or internet of things gadgets, the requirement for reducing the screen size is getting more and more prominent. At the same time meaningful info has to be conveyed to the user within the available area. A methodology for achieving this is provided in the invention. Only one control is provided in the touch screen, which when touched by the user activates the most used or required controls gets displayed. Till the moment the touch screen provides info for user requirement, which would have been compromised by more settings or other control icons. Current user interface suffers from this disadvantage. With this invention more controls gets available once the user activates the single control, now the user has to drag to the required settings or control of their interest. By this method, the user interface becomes simpler without the need for displaying unnecessarily more settings option. The more frequently used settings are displayed during activation of the single control only. Also user has the flexibility to choose what settings have to be displayed. Even if the screen is bigger, user doesnt want their screen size to be filled with many unnecessary control icons. The presented invention thus facilitates the max utilization of the screen size for any touch screen device like mobile phones, tablets, smart watches etc. The invention improves the speed with which the user will use the touch screen as it reduces the due diligence.

No. of Pages : 23 No. of Claims : 10

(12) PATENT APPLICATION PUBLICATION
(21) Application No.3503/CHE/2015 A
(19) INDIA
(22) Date of filing of Application :08/07/2015
(43) Publication Date : 24/07/2015

(54) Title of the invention : A NOVEL POLYMORPHIC FORM OF RIFAXIMIN

(51) International classification :C07D
(31) Priority Document No :NA
(32) Priority Date :NA
(33) Name of priority country :NA
(86) International Application No :NA
Filing Date :NA
(87) International Publication No : NA
(61) Patent of Addition to Application Number :2651/CHE/2010
Filed on :01/01/1900
(62) Divisional to Application Number :NA
Filing Date :NA

(71)**Name of Applicant :**
1)SeQuent Scientific Limited
Address of Applicant :120 A & B, Industrial Area, Baikampady, Mangalore-575011, Karnataka, India.
(72)**Name of Inventor :**
1)GAUTAM, Kumar Das
2)SUMANGALA, Venkatramana
3)RESHMA, Kayarmar
4)PRASAD, Narasimha Patgar
5)RAKESH, Kotian Rama
6)NAVEEN, Ramayya Ambekallu
7)VASUDEVA, Pejakala Kakrannaya

(57) Abstract :
The present invention discloses a stable crystalline form of Rifaximin characterised by having X-ray powder diffraction pattern as given in figure 1, having a 2 peaks at 7.2 and a broad obtuse peak centred at 2 value 20.0, further characterized by a scanning electron microscope image as given in figure 2, further characterized by a polarising microscope image as given in figure 3 and still further characterized by morphology data as given in figure 4.

No. of Pages : 12 No. of Claims : 8

(12) PATENT APPLICATION PUBLICATION
(21) Application No.3603/CHE/2015 A
(19) INDIA
(22) Date of filing of Application :15/07/2015
(43) Publication Date : 24/07/2015

(54) Title of the invention : DESIGN AND DEVELOPMENT OF COOLING MODULE FOR MILK

(51) International classification :A23C
(31) Priority Document No :NA
(32) Priority Date :NA
(33) Name of priority country :NA
(86) International Application No :NA
Filing Date :NA
(87) International Publication No : NA
(61) Patent of Addition to Application Number :NA
Filing Date :NA
(62) Divisional to Application Number :NA
Filing Date :NA

(71)**Name of Applicant :**
1)GIRIYAPURA BASAVARAJAPPA DARSHAN
Address of Applicant :M.TECH SCHOLAR, DAIRY ENGINEERING SECTION, SRS OF ICAR-NDRI, ADUGODI, BENGALURU - 560 030, Karnataka India
(72)**Name of Inventor :**
1)GIRIYAPURA BASAVARAJAPPA DARSHAN
2)CHIKKAMUTHARAYAPPA MANJUNATHA
3)GURUVANNA MAHESH KUMAR
4)KEREKOPPA PUTTAIAH BHATTA RAMESHA
5)BATTULA SURENDRA NATH
6)BACHAHALLI VENKATAGIRI BALASUBRAMANYAM
7)MENON REKHA RAVINDRA

(57) Abstract :
The bacterial load is a reflection of the hygienic quality of milk. At the time of milking, temperature of raw milk will be about 37°C, which is ideal for microbial growth. It is crucial to contain the bacterial growth at the initial stages by cooling immediately after milking. Cooling of milk to less than 10°C immediately after milking at Co-operative society level reduce the microbial growth and the microbial count significantly before pasteurization. Milk cooling is practiced through cooling rings, surface coolers, ice-cones. Modern methods include Ice-bank cooling, Direct Expansion cooling and Bulk Milk Coolers (BMC). Indian milk production is a saga of millions of small farmers who contribute to milk production and at milk collection centres having less than 100L of milk .Due to economic reasons the existing cooling methods are unsuitable to cool the milk under small holder production system. Existing methods of cooling which are mostly suitable for large quantity of milk and become uneconomical to use for small holder dairy farms and small procurement collection centres, the proposed system of cooling is supposed to be well suited with affordable cost. In the context of the unsuitable technology for small scale milk producers, economic constraints and the relative inefficiency of present systems, the development of cooling module to suit requirements for quality maintenance in small scale production levels is of great interest to Indian dairy farmers. Our efforts resulted in the development of the portable stainless steel cooling module comprising of secondary refrigerants inside the module for cooling of milk and liquids after prior freezing to enhance shelf life and improve quality.

No. of Pages : 21 No. of Claims : 5

(12) PATENT APPLICATION PUBLICATION
(21) Application No.3441/CHE/2015 A
(19) INDIA
(22) Date of filing of Application :06/07/2015
(43) Publication Date : 24/07/2015

(54) Title of the invention : WATER PURIFYING APPARATUS FOR FERROUS AND NON-FERROUS IMPURITIES MEANT FOR WASHING MACHINE

(51) International classification	:B07B	(71)**Name of Applicant :**
(31) Priority Document No	:NA	**1)K.NAGESHWAR**
(32) Priority Date	:NA	Address of Applicant :1303, G.2, I BLOCK, 31ST STREET,
(33) Name of priority country	:NA	KAMBAR COLONY, ANNA NAGAR WEST, CHENNAI - 40,
(86) International Application No	:NA	Tamil Nadu India
Filing Date	:NA	(72)**Name of Inventor :**
(87) International Publication No	: NA	**1)K.NAGESHWAR**
(61) Patent of Addition to Application Number	:NA	
Filing Date	:NA	
(62) Divisional to Application Number	:NA	
Filing Date	:NA	

(57) Abstract :
An apparatus for filtering and removing the visible ferrous and non-ferrous impurities from the water through the creation of a magnetic field with required intensity inside the hollow and removably sealed cylindrical filtering body is disclosed. The apparatus comprises an inlet port and a diagonally placed opposite outlet port attached to the top end and the bottom end of the said hollow and removably sealed cylindrical body for inletting the impure water and out-letting the purified water. A curved concave plate fixedly attached to the inner lower region of the said cylindrical body for receiving the in¬let impure water over the concave surface. Magnetic bars of pre-determined numbers fixedly attached to the bottom surface of the said curved concave plate with the magnetic field extending to the entire concave plate. Mesh filtering arrangement for filtering the visible non ferrous impurities fixedly positioned below the said curved concave plate: A cup or cone shaped funnel attached at the side or top of the apparatus act as a passage for detergent or washing powder Fig.

No. of Pages : 29 No. of Claims : 18

(12) PATENT APPLICATION PUBLICATION
(21) Application No.2774/CHE/2015 A
(19) INDIA
(22) Date of filing of Application :02/06/2015
(43) Publication Date : 24/07/2015

(54) Title of the invention : (3-(2-CHLOROQUINOLIN-3-YL) OXIRAN-2-YL)(PHENYL) METHANONE DERIVATIVES AND MEDICINAL USE THEREOF

(51) International classification	:C07D
(31) Priority Document No	:NA
(32) Priority Date	:NA
(33) Name of priority country	:NA
(86) International Application No	:NA
Filing Date	:NA
(87) International Publication No	: NA
(61) Patent of Addition to Application Number	:NA
Filing Date	:NA
(62) Divisional to Application Number	:NA
Filing Date	:NA

(71)**Name of Applicant :**
1)DR.GOPALPUR NAGENDRAPPA
Address of Applicant :PROFESSOR & HEAD (CHEMISTRY DEPARTMENT), JAIN UNIVERSITY, # 52, BELLARY ROAD, HEBBAL, BANGALORE - 560 024, Karnataka India
(72)**Name of Inventor :**
1)NARASIMHA MURTHY PREVEENA
2)AMIT KUMAR TIWARI
3)DR. GOPALPUR NAGENDRAPPA

(57) Abstract :
The present invention pro vides novel quinolinyl epoxy ketones and their derivatives of general formula (1) by Darzens reaction of 2-chloroquinoline-3-carbaldehydes and its 6-substituted derivatives of the general formula (5) with phenacyl bromides and its 2- and 4-mono and 2,4-disubstituted derivatives of the general formula (6) in a very mild base at room temperature in a higher chemical purity, greater yield, mild conditions in shorter reaction time and in an efficient eco friendly manner. The required 2-chloroquinoline-3-carbaldehydes and its 6-substituted derivatives of the general formula (5) were prepared from acetanilide and its 4-substituted derivatives using Vilsmeier-Haack procedure. The compounds prepared according to the present invention are useful pharmaceutical producs and intermediates in the preparation of pharmaceutical products. Wherein, R = Hydrogen or Alkyl Group or Alkoxy Group or.Halogen Group R¡ = Hydrogen or Alkyl Group or Alkoxy Group or Halogen Group R2 = Hydrogen or Alkyl Group or Alkoxy Group or Halogen Group

No. of Pages : 28 No. of Claims : 10

(12) PATENT APPLICATION PUBLICATION
(21) Application No.3551/CHE/2015 A
(19) INDIA
(22) Date of filing of Application :10/07/2015
(43) Publication Date : 24/07/2015

(54) Title of the invention : A DEVICE TO DETECT AND NOTIFY UNDRESS EVENT OF THE USER

(51) International classification :A41D
(31) Priority Document No :NA
(32) Priority Date :NA
(33) Name of priority country :NA
(86) International Application No :NA
Filing Date :NA
(87) International Publication No : NA
(61) Patent of Addition to Application Number :NA
Filing Date :NA
(62) Divisional to Application Number :NA
Filing Date :NA

(71)**Name of Applicant :**
1)Sahani Mrinal
Address of Applicant :#407, C Block, Aashish JK Apartment, Thubarahalli, Bangalore. Karnataka India
(72)**Name of Inventor :**
1)Sahani Mrinal
2)Shrivastava Amit

(57) Abstract :
A wearable device to detect the undressing of the user wearing it and to send the undress notification along with the device location information to the other party configured on the device. There is a substantial rise in the rape and molestation cases in India in last few years. In most of the cases victims dont even get a chance to notify their loved ones that they are in trouble. This device sends the undress notification of the user automatically to the party configured on the device without any manual intervention. The notification receiving party can monitor the device environment remotely and arrange for the rescue immediately if needed.

No. of Pages : 16 No. of Claims : 7

(12) PATENT APPLICATION PUBLICATION
(19) INDIA
(22) Date of filing of Application :30/12/2014
(21) Application No.6702/CHE/2014 A
(43) Publication Date : 24/07/2015

(54) Title of the invention : A SYSTEM AND METHOD TO MAKE ONE PIECE THIN WALLED METAL CONTAINERS

(51) International classification :B21D
(31) Priority Document No :NA
(32) Priority Date :NA
(33) Name of priority country :NA
(86) International Application No :NA
Filing Date :NA
(87) International Publication No : NA
(61) Patent of Addition to Application Number :NA
Filing Date :NA
(62) Divisional to Application Number :NA
Filing Date :NA

(71)**Name of Applicant :**
1)MORTHALA SRINIVASA REDDY
Address of Applicant :VILLA NO. 311, INDU FORTUNE FIELDS, KPHB COLONY, PHASE -13, HYDERABAD Telangana India
2)MORTHALA MALLA REDDY
(72)**Name of Inventor :**
1)MORTHALA SRINIVASA REDDY
2)MORTHALA MALLA REDDY

(57) Abstract :
The present invention discloses an improved method to prepare a thin walled, integral bottom and cylindrical body copper container in a single impact extrusion operation or a cold forging operation, followed by drawing the body to desired length and concaving the bottom, and then necking the upper portion in a series of steps which gradually reduce the diameter of the open end of the body while simultaneously thickening the neck walls without wrinkling the smooth contour of the container is disclosed. The invention is to produce, by a commercially economical method, seamless very thin walled container capable of resisting pressures for their intended purposes, from slugs which contain a volume of metal utilized in other dished containers.

No. of Pages : 18 No. of Claims : 10

(12) PATENT APPLICATION PUBLICATION
(21) Application No.3102/CHE/2014 A
(19) INDIA
(22) Date of filing of Application :26/06/2014
(43) Publication Date : 24/07/2015

(54) Title of the invention : AUTOMATIC CEILING SWING CRADLE

(51) International classification :A47D
(31) Priority Document No :NA
(32) Priority Date :NA
(33) Name of priority country :NA
(86) International Application No :PCT//
Filing Date :01/01/1900
(87) International Publication No : NA
(61) Patent of Addition to Application Number :NA
Filing Date :NA
(62) Divisional to Application Number :NA
Filing Date :NA

(71)**Name of Applicant :**
1)BHARATH UNIVERSITY
Address of Applicant :173, Agharam Road, Selaiyur, Chennai 600 073. Tamil Nadu India
(72)**Name of Inventor :**
1)Dr. X.Charles
2)Dr.J.Hameed Hussain

(57) Abstract :
An automatic ceiling swing baby cradle is disclosed here. The cradle facilitates the sleeping of the baby without continuous human monitoring.

No. of Pages : 7 No. of Claims : 6

(12) PATENT APPLICATION PUBLICATION
(21) Application No.3560/CHE/2015 A
(19) INDIA
(22) Date of filing of Application :13/07/2015
(43) Publication Date : 24/07/2015

(54) Title of the invention : ON ROAD DUST EXTRACTION SYSTEM

(51) International classification :E01C
(31) Priority Document No :NA
(32) Priority Date :NA
(33) Name of priority country :NA
(86) International Application No :NA
Filing Date :NA
(87) International Publication No : NA
(61) Patent of Addition to Application Number :NA
Filing Date :NA
(62) Divisional to Application Number :NA
Filing Date :NA

(71)**Name of Applicant :**
1)THE REGISTRAR
Address of Applicant :VELS UNIVERSITY, P.V.VAITHIYALINGAM ROAD, VELAN NAGAR, PALLAVARAM, CHENNAI - 117, Tamil Nadu India
(72)**Name of Inventor :**
1)MR.HARIHARAN VENKATESAN
2)MR.ROOBAN ABRAHAM
3)DR.CHANDRASEKARAN MANOHARAN
4)DR.ARUN SAHAYADHAS
5)MR.SIBI NAVANEETHA KRISHNAN

(57) Abstract :
The present invention relates to a system that extracts sand and dust from roads and dust formed from the wheels of automobiles while driving. The present invention is an attachment rather than a dust extraction vehicle and it can be attached in any automobile for dust extraction from road during driving.

No. of Pages : 13 No. of Claims : 4

(12) PATENT APPLICATION PUBLICATION
(21) Application No.3561/CHE/2015 A
(19) INDIA
(22) Date of filing of Application :13/07/2015
(43) Publication Date : 24/07/2015

(54) Title of the invention : TANGENTIAL SUSPENSION SYSTEM FOR TWO WHEELER AUTOMOILES

(51) International classification :B60G
(31) Priority Document No :NA
(32) Priority Date :NA
(33) Name of priority country :NA
(86) International Application No :NA
Filing Date :NA
(87) International Publication No : NA
(61) Patent of Addition to Application Number :NA
Filing Date :NA
(62) Divisional to Application Number :NA
Filing Date :NA

(71)**Name of Applicant :**
1)THE REGISTRAR
Address of Applicant :VELS UNIVERSITY, P.V.VAITHIYALINGAM ROAD, VELAN NAGAR, PALLAVARAM, CHENNAI - 117, Tamil Nadu India
(72)**Name of Inventor :**
1)MR.THIMARAJAPURAM KALIMUTHU SENTHUR PANDIAN SATHISH PANDIAN
2)DR.CHANDRASEKARAN MANOHARAN
3)MR.GANESH KOLAPPAPILLAI
4)MR.SIBI NAVANEETHA KRISHNAN
5)MR.RAJEEV GANDHI BALA KRISHNAN

(57) Abstract :
The present invention relates to a suspension system which provides suspension to two wheeler automobiles by providing a tangential suspension by modifying the design of the alloy wheel present in two wheeler automobiles. The present invention relates to a tangential suspension system that replaces the current suspension system in two wheeler automobiles.

No. of Pages : 10 No. of Claims : 2

(12) PATENT APPLICATION PUBLICATION
(21) Application No.3472/CHE/2015 A
(19) INDIA
(22) Date of filing of Application :07/07/2015
(43) Publication Date : 24/07/2015

(54) Title of the invention : ENERGY HARNESS OPERATING SYSTEM

(51) International classification :B60L
(31) Priority Document No :NA
(32) Priority Date :NA
(33) Name of priority country :NA
(86) International Application No :NA
Filing Date :NA
(87) International Publication No : NA
(61) Patent of Addition to Application Number :NA
Filing Date :NA
(62) Divisional to Application Number :NA
Filing Date :NA

(71)**Name of Applicant :**
1)VANDAVASI HARANADH
Address of Applicant :VEMPARALA, ADDANKI, PRAKASAM, 523 201, Andhra Pradesh India
2)ADUSUMALLI VENKATA SUDHEER KUMAR
(72)**Name of Inventor :**
1)VANDAVASI HARANADH
2)ADUSUMALLI VENKATA SUDHEER KUMAR
3)OM KUMAR SHUKLA

(57) Abstract :
An energy harness operating system (EHOS) is a regenerative braking consisting of spiral springs stores the energy which if not stored will dissipated in the form of heat produced by friction brakes. When brakes are applied the regenerative braking gets activated instead of conventional friction brakes. This makes the drive train rotate the arbor on which spiral springs are mounted and the spiral spring starts winding around the arbor. This winding of the spring stores the energy. When required the energy is released by operating a lever provided for this purpose. Then the spring starts unwinding and releases the energy in the form of mechanical torque, which through the help of drivetrain rotates the drive shaft of the vehicle. This torque provided reduces the load on the engine and is helpful at the time of idling and power range. Thus reduces fuel intake by the engine and increases its efficiency.

No. of Pages : 27 No. of Claims : 10

(12) PATENT APPLICATION PUBLICATION
(21) Application No.3474/CHE/2015 A
(19) INDIA
(22) Date of filing of Application :07/07/2015
(43) Publication Date : 24/07/2015

(54) Title of the invention : NANO CATALYTIC INSTANT WATER CONVERSION DEVICE

(51) International classification :C01B
(31) Priority Document No :NA
(32) Priority Date :NA
(33) Name of priority country :NA
(86) International Application No :NA
Filing Date :NA
(87) International Publication No : NA
(61) Patent of Addition to Application Number :NA
Filing Date :NA
(62) Divisional to Application Number :NA
Filing Date :NA

(71)**Name of Applicant :**
1)MOLUGU BHARRATH
Address of Applicant :Divyashakthy Technologies, H.No.7-1-621/103/104, Flat No.304, Swastik Plaza, Above Himalaya Book World, S.R.Nagar, Hyderabad-500038 Telangana India
(72)**Name of Inventor :**
1)MOLUGU BHARRATH

(57) Abstract :
The present invention is a nano catalytic instant water conversion setup which is used to remove the hardness with low maintenance cost and easy to maintain device. It comprises a water inlet pipe, a pressure switch, a nano catalytic water conversion device, a regulated power supply, an LED indicator, two terminals which are provided on the shell of the conversion device to provide D.C power supply; a water outlet pipe, wherein the nano catalytic instant water conversion device comprises a stainless steel (SS) graded threaded or flanged ends of specific length to create artificial obstruction thereby allowing the water to pass through and also hammering takes place as the passage is linear and diametrical where molecule of the compounds dissolved in the water are broken from 600 microns to 3-5 mi-crons.

No. of Pages : 12 No. of Claims : 5

(12) PATENT APPLICATION PUBLICATION
(21) Application No.741/CHE/2015 A
(19) INDIA
(22) Date of filing of Application :16/02/2015
(43) Publication Date : 24/07/2015

(54) Title of the invention : PEDAL OPERATED FLOUR MILL

(51) International classification :B02C
(31) Priority Document No :NA
(32) Priority Date :NA
(33) Name of priority country :NA
(86) International Application No :NA
Filing Date :NA
(87) International Publication No : NA
(61) Patent of Addition to Application Number :NA
Filing Date :NA
(62) Divisional to Application Number :NA
Filing Date :NA

(71)**Name of Applicant :**
1)YALLAPPA D.
Address of Applicant :S/O DENGERU NAGAPPA, 4TH WARD, TELUGARA HONI, ADONI ROAD, RARAVI(P), SIRUGUPPA TALUK, BELLARY DISTRICT, PIN-583121 Karnataka India
(72)**Name of Inventor :**
1)YALLAPPA D.

(57) Abstract :
The pedal operated flour mill unit basically consists of a hopper along with a feeding tube at the top, a pair of grinding stones and the hemi spherical collector at the bottom, a seat for the operator and power transmission system. The grinding stones selected are light in weight to avoid the early fatigue of the operator. The clearance between the two stones can be adjusted by. changing the position of the top stone in the vertical direction. The pedal operated flourmill is suitable for grinding almost all cereals and pulses to produce Rawa, Atta (Flour) and Dhal for human consumption and also producing poultry and fish feed by grinding agro by-products and wastes.

No. of Pages : 9 No. of Claims : 8

(12) PATENT APPLICATION PUBLICATION
(19) INDIA
(22) Date of filing of Application :05/04/1995
(21) Application No.380/CAL/1995 A
(43) Publication Date : 24/07/2015

(54) Title of the invention : A NATURAL GAS LIQUEFACTION PROCESS AND APPARATUS FOR THE SAME

(51) International classification	:F25J 5/00
(31) Priority Document No	:NA
(32) Priority Date	:NA
(33) Name of priority country	:NA
(86) International Application No	:NA
Filing Date	:NA
(87) International Publication No	: NA
(61) Patent of Addition to Application Number	:NA
Filing Date	:NA
(62) Divisional to Application Number	:NA
Filing Date	:NA

(71)**Name of Applicant :**
1)BHP PETROLEUM PTY. LTD.
Address of Applicant :BHP PETROLEUM PLAZA, 120 COLLINS STREET, MELBOURNE, VICTORIA Australia
(72)**Name of Inventor :**
1)CHPISTOPHER ALFRED DUBAR

(57) Abstract :
A process for producing a liquefied natural product such at LNG is described where a single phase nitrogen refrigerant is used in such a way that the refrigerant stream is divided into at least two separate portions which are passed through separate turbo-expanders before being admitted to separate heat exchangers so that the warming curve of the refrigerant more closely matches the cooling curve of the product being liquefied so as to minimise thermodynamic inefficiencies and hence power requirements involved in operation of the method.

No. of Pages : 43 No. of Claims : 19

(12) PATENT APPLICATION PUBLICATION
(21) Application No.171/KOL/2010 A
(19) INDIA
(22) Date of filing of Application :23/02/2010
(43) Publication Date : 24/07/2015

(54) Title of the invention : A WATER-BASED LUBRICANT COMPOSITION FOR METAL WORKING OPERATIONS SUCH AS COLD ROLLING AND HOT ROLLING OF STEEL

(51) International classification :C10M105/14
(31) Priority Document No :NA
(32) Priority Date :NA
(33) Name of priority country :NA
(86) International Application No :NA
Filing Date :NA
(87) International Publication No : NA
(61) Patent of Addition to Application Number :NA
Filing Date :NA
(62) Divisional to Application Number :NA
Filing Date :NA

(71)**Name of Applicant :**
1)TATA STEEL LIMITED
Address of Applicant :RESEARCH AND DEVELOPMENT DIVISION, JAMSHEDPUR 831001, INDIA
(72)**Name of Inventor :**
1)RITA GHOSH
2)NIKHILESH BANDYOPADHYAY
3)SUNITESH DAS
4)DEBASHISH BHATTACHARJEE

(57) Abstract :
A water-based lubricant composition for metal working operations comprising: clay material of 1μ particle size; deflocculating agent, additives and water to make a dispersed solution.

No. of Pages : 26 No. of Claims : 7

(12) PATENT APPLICATION PUBLICATION
(19) INDIA
(22) Date of filing of Application :22/05/1995
(21) Application No.570/CAL/1995 A
(43) Publication Date : 24/07/2015

(54) Title of the invention : AN ULTRASOUND IMAGING APPARATUS

(51) International classification :A61B 8/00
(31) Priority Document No :NA
(32) Priority Date :NA
(33) Name of priority country :NA
(86) International Application No :NA
Filing Date :NA
(87) International Publication No : NA
(61) Patent of Addition to Application Number :NA
Filing Date :NA
(62) Divisional to Application Number :NA
Filing Date :NA

(71)**Name of Applicant :**
1)SIEMENS MEDICAL SYSTEMS, INC.
Address of Applicant :186 WOOD AVENUE SOUTH ISELIN, NJ 08830 U.S.A.
(72)**Name of Inventor :**
1)BANJANIN, ZORAN B.
2)SHAHMIRIAN, VARAZ

(57) Abstract :
An ultrasound imaging apparatus for providing a blood flow velocity distribution display of blood in a blood vessel comprising : means for transmitting at least one acoustic beam to a region of interest in the blood vessel as herein described from a transducer array, and said means for receiving at least two echo beams, a first echo beam from the region of interest at the first sub-aperture array which first echo beam is generated by the acoustic beam, and a second echo from the region of interest at a second sub-aperture array which second echo beam is generated by the acoustic beam; means for estimating at least one mean Doppler fre- quency, a first mean Doppler frequency from the first echo beam substantially in parallel with means for estimating

No. of Pages : 21 No. of Claims : 12

(12) PATENT APPLICATION PUBLICATION
(19) INDIA
(22) Date of filing of Application :03/01/1995
(21) Application No.7/CAL/1995 A
(43) Publication Date : 24/07/2015

(54) Title of the invention : PROCESS FOR THE PREPARATION OF HIGHLY PROCESSABLE POLYMERIC COMPOSITION BASED ON LINEAR LOW DENSITY POLYETHYLENE

(51) International classification :C08F 210/02
(31) Priority Document No :NA
(32) Priority Date :NA
(33) Name of priority country :NA
(86) International Application No :NA
Filing Date :NA
(87) International Publication No : NA
(61) Patent of Addition to Application Number :NA
Filing Date :NA
(62) Divisional to Application Number :NA
Filing Date :NA

(71)**Name of Applicant :**
1)MONTELL TECHNOLOGY COMPANY BV
Address of Applicant :HOEKSTEEN 66, 2132 MS HOOFDDORP Netherlands
(72)**Name of Inventor :**
1)SPHERILENE SPA
2)GABRIELE GOVONI
3)MASSIMO COVEZZI
4)CLAUDIO COMETTO

(57) Abstract :
The present invention provides a heat exchanger utilising an improved rod baffle. The improved rod baffle has at least one baffle ring and a plurality of baffle support members comprised of a first strip and a second strip each attached to the baffle ring and extending across said ring such that each strip will support an adjacent tube row. Support struts are attached to and extend between the first and second strip. The improved rod baffle provides for a reduced longitudinal-flow, shell-side pressure drop over a solid support member.

No. of Pages : 23 No. of Claims : 13

Publication After 18 Months:

The following Patent Applications have been published under Section 11A (3) of The Patents (Amendment) Act, 2005. Any Person may file representation by way of opposition to the Controller of Patents at the appropriate office against the grant of the patent in the prescribed manner under section 25(1) of the Patents (Amendment) Act, 2005 read with the rule 55 of The Patents (Amendment) Rules, 2006:

(12) PATENT APPLICATION PUBLICATION

(21) Application No.1035/DEL/2012 A

(19) INDIA

(22) Date of filing of Application :03/04/2012

(43) Publication Date : 24/07/2015

(54) Title of the invention : TITANIUM OXIDE SPACING BY SIP

(51) International classification	:C07C	(71)**Name of Applicant :**
(31) Priority Document No	:13/095,300	**1)BEHR PROCESS CORPORATION**
(32) Priority Date	:27/04/2011	Address of Applicant :3400 W. SEGERSTROM AVENUE
(33) Name of priority country	:U.S.A.	SANTA ANA, CALIFORNIA 92704 U.S.A.
(86) International Application No	:NA	**2)NORTHWESTERN UNIVERSITY**
Filing Date	:NA	(72)**Name of Inventor :**
(87) International Publication No	:NA	**1)FAN, XIAOWN**
(61) Patent of Addition to Application Number	:NA	**2)SHI, JINZHEN**
Filing Date	:NA	**3)TARNG, MING-REN**
(62) Divisional to Application Number	:NA	**4)LEE, DONG-KEUN**
Filing Date	:NA	**5)MESSERSMITH, PHILLIP B.**

(57) Abstract :
A method of making a titanium oxide-containing coating composition comprises attaching an initiator to a pretreated titanium oxide to form an initiator/pretreated titanium oxide complex. The pretreated titanium oxide includes a plurality of pretreated titanium oxide particles which are titanium oxide particles that are pretreated with at least one metal oxide. The initiator/pretreated titanium oxide complex is contacted with a polymerizable unsaturated monomer such that a polymeric encapsulate forms on the initiator/pretreated titanium oxide particles to form polymeric encapsulated titanium oxide particles.

No. of Pages : 21 No. of Claims : 20

(12) PATENT APPLICATION PUBLICATION
(21) Application No.168/DEL/2014 A
(19) INDIA
(22) Date of filing of Application :21/01/2014
(43) Publication Date : 24/07/2015

(54) Title of the invention : AEROMATIC DROP HAMMER HEAD GEAR

(51) International classification :B21J
(31) Priority Document No :NA
(32) Priority Date :NA
(33) Name of priority country :NA
(86) International Application No :NA
Filing Date :NA
(87) International Publication No : NA
(61) Patent of Addition to Application Number :NA
Filing Date :NA
(62) Divisional to Application Number :NA
Filing Date :NA

(71)**Name of Applicant :**
1)Kulwant Singh
Address of Applicant :NKH Building, Plot No.1, Industrial Area A, Link Road, Ludhiana Punjab India
(72)**Name of Inventor :**
1)Kulwant Singh

(57) Abstract :
Be it known that we Forging Machinery Manufacturing Company, in the State of Punjab located at NKH Building, Plot No.1, Industrial Area A, Link Road, Ludhiana 141003. India, have invented new Aeromatic driven pneumatic control headgear mechanism for friction Drop Hammers, of which the following is a specification. This invention is for the purpose of making Improvements in the conventional technology used for lifting, releasing and lowering the hammer ram or tup of a drop hammer by frictional mechanism. It relates to the simplification of mechanism, use of electronically pneumatic controlled clutch and brake system on the main shaft for the movement and control of falling ram or tup. In the conventional hammers adapted and applied for such purpose and to enabling drop hammers to be actuated by in closed guideways. It also has for an object to obviate the necessity of adjusting the length of stroke of a drop hammer by manual labor or operator through logical unit in control panel. Another object is to dispense with the transmission gears along with its mounting shaft, cooling water system for gear transmission shaft, removal of friction drum, spring carrier levers, arms, and brake liners/band. Another object is to transmit the power from both the sides of the main shaft for a reduced electrical energy.

No. of Pages : 7 No. of Claims : 4

(12) PATENT APPLICATION PUBLICATION
(19) INDIA
(22) Date of filing of Application :02/03/2012
(21) Application No.1891/DELNP/2012 A
(43) Publication Date : 24/07/2015

(54) Title of the invention : METHODS AND KITS FOR CELL RELEASE

(51) International classification :C12N 5/02
(31) Priority Document No :12/570,032
(32) Priority Date :30/09/2009
(33) Name of priority country :U.S.A.
(86) International Application No :PCT/SE2010/051033
Filing Date :27/09/2010
(87) International Publication No :WO 2011/040867
(61) Patent of Addition to Application Number :NA
Filing Date :NA
(62) Divisional to Application Number :NA
Filing Date :NA

(71)**Name of Applicant :**
1)GENERAL ELECTRIC COMPANY
Address of Applicant :1 RIVER ROAD, SCHENECTADY, NEW YORK 12345, U.S.A.
(72)**Name of Inventor :**
1)SLAWOMIR RUBINSZTAJN
2)REGINALD D SMITH
3)EVELINA R LOGHIN
4)PRAMEELA SUSARLA

(57) Abstract :
Methods and kits of releasing cells are provided. The method comprises the steps of providing cultured cells on a cell culture support comprising a multi layer polyelectrolyte coating immobilized on a substrate, and releasing the cultured cells from the cell culture support by a releasing solution comprising DMSO. The kit comprises a cell culture support and a releasing solution. The releasing solution comprises DMSO.

No. of Pages : 16 No. of Claims : 21

(12) PATENT APPLICATION PUBLICATION
(19) INDIA
(22) Date of filing of Application :02/03/2012
(21) Application No.1892/DELNP/2012 A
(43) Publication Date : 24/07/2015

(54) Title of the invention : SEAT CUSHION INCLINATION ADJUSTMENT SYSTEM

(51) International classification :B60N 2/44
(31) Priority Document No :10 2009 052 111.9
(32) Priority Date :05/11/2009
(33) Name of priority country :Germany
(86) International Application No :PCT/EP2010/005791
Filing Date :22/09/2010
(87) International Publication No :WO 2011/054416
(61) Patent of Addition to Application Number :NA
Filing Date :NA
(62) Divisional to Application Number :NA
Filing Date :NA

(71)**Name of Applicant :**
1)JOHNSON CONTROLS GMBH
Address of Applicant :INDUSTRIESTR. 20-30, 51399 BURSCHEID, GERMANY
(72)**Name of Inventor :**
1)JURGEN ARRENBERG

(57) Abstract :
The invention relates to a seat part of a motor vehicle seat, comprising a base part having a transverse supporting element and an adjustable part.

No. of Pages : 13 No. of Claims : 12

(12) PATENT APPLICATION PUBLICATION
(19) INDIA
(22) Date of filing of Application :02/03/2012
(21) Application No.1893/DELNP/2012 A
(43) Publication Date : 24/07/2015

(54) Title of the invention : LED LAMPS WITH PACKAGING AS A KIT

(51) International classification :B65D 85/42
(31) Priority Document No :61/237,686
(32) Priority Date :28/08/2009
(33) Name of priority country :U.S.A.
(86) International Application No :PCT/US2010/047193
Filing Date :30/08/2010
(87) International Publication No :WO 2011/026052
(61) Patent of Addition to Application Number :NA
Filing Date :NA
(62) Divisional to Application Number :NA
Filing Date :NA

(71)**Name of Applicant :**
1)ONCE INNOVATIONS, INC.
Address of Applicant :5455 HIGHWAY 169 NORTH, PLYMOUTH, MN 55442, U.S.A.
(72)**Name of Inventor :**
1)ZDENKO GRAJCAR
2)BRIAN BABB

(57) Abstract :
Apparatus and methods for re-usable pack- aging of a lighting product include providing a container body to receive an electric lamp and a cover that can be re- peated sealed and unsealed to the container. In an illustra¬tive example, the lamp may be an AC LED lamp substan¬tially located within the container body by a lamp locating feature on a bottom interior surface of the container body. In some embodiments, an interior surface of the lid may provide a projecting feature configured to positively retain the lamp in the lamp locating feature when the lid is in¬stalled on the container body. In various embodiments, the . container, body and the container lid may advantageously provide a protective package that may be sold as a lot, and may further provide a durable and reusable general pur-'pose container system that may, for example, substantially reduce an environmental footprint associated with lamp packaging.

No. of Pages : 37 No. of Claims : 20

(12) PATENT APPLICATION PUBLICATION
(21) Application No.1024/DEL/2012 A
(19) INDIA
(22) Date of filing of Application :03/04/2012
(43) Publication Date : 24/07/2015

(54) Title of the invention : COMPONENT FOR A TURBOMACHINE AND METHOD FOR MANUFACTURING SUCH A COMPONENT

(51) International classification :F01D
(31) Priority Document No :00604/11
(32) Priority Date :04/04/2011
(33) Name of priority country :Switzerland
(86) International Application No :NA
Filing Date :NA
(87) International Publication No :NA
(61) Patent of Addition to Application Number :NA
Filing Date :NA
(62) Divisional to Application Number :NA
Filing Date :NA

(71)**Name of Applicant :**
1)ALSTOM TECHNOLOGY LTD.
Address of Applicant :BROWN BOVERI STRASSE 7, 5400 BADEN, SWITZERLAND
(72)**Name of Inventor :**
1)DUVAL SOPHIE BETTY CLAIRE
2)BECKEL DANIEL
3)GRASSO PIERRO-DANIELE
4)STANKOWSKI ALEXANDER
5)SZWEDOWICZ JAROSLAW LESZEK

(57) Abstract :
The invention relates to a component for a turbomachine, in particular a gas turbine, or another engine containing a hot component, which component (14) is prone to crack formation and propagation by being subjected to high temperatures and/or a corrosive and/or oxidising atmosphere and/or a high mechanical load and/or cyclic thermal load and/or transient conditions, whereby said component (14) contains at least one base material (15). A substantial extension of the component lifetime is achieved by providing said at least one base material (15) with a self healing system in form of an added active phase (16), whereby said active phase (16) comprises a melting point depressant and/or a substance or substances with a softening or melting point below or within the range of the operating temperature of the component (14).

No. of Pages : 30 No. of Claims : 18

(12) PATENT APPLICATION PUBLICATION
(21) Application No.190/DEL/2014 A
(19) INDIA
(22) Date of filing of Application :21/01/2014
(43) Publication Date : 24/07/2015

(54) Title of the invention : FACILITATING SOCIAL INTERACTIONS USING COMMUNICATION DEVICES

(51) International classification :G06Q10/00
(31) Priority Document No :NA
(32) Priority Date :NA
(33) Name of priority country :NA
(86) International Application No :NA
Filing Date :NA
(87) International Publication No : NA
(61) Patent of Addition to Application Number :NA
Filing Date :NA
(62) Divisional to Application Number :NA
Filing Date :NA

(71)**Name of Applicant :**
1)ALCATEL LUCENT
Address of Applicant :3, AVENUE OCTAVE GREARD 75007 PARIS, FRANCE
(72)**Name of Inventor :**
1)THYAGARAJA, SOMASHEKAR

(57) Abstract :
The present subject matter relates to systems and methods for facilitating social interactions using communication devices. In an implementation, inputs pertaining to the motion of the communication device (105-1) from the one or more motion sensors (120) are received. In response to receiving the inputs, another communication device (105-2) in a predetermined range of the communication device (105-1) is identified. Further, it is ascertained whether a social interaction event has occurred with a user of the identified communication device (105-2), based on detection rules. When it is ascertained that the social interaction event has occurred, sharing of personal information corresponding to a user of the communication device (105-1) with the identified communication device (105-2) is facilitated. Further, the personal information is shared based on an information sharing mode of the communication device (105-1).

No. of Pages : 30 No. of Claims : 15

(12) PATENT APPLICATION PUBLICATION
(19) INDIA
(22) Date of filing of Application :02/03/2012
(21) Application No.1900/DELNP/2012 A
(43) Publication Date : 24/07/2015

(54) Title of the invention : METHOD AND SYSTEM FOR BYPASSING CALLED INTELLIGENCE

(51) International classification :H04W 76/00
(31) Priority Document No :200910171890.1
(32) Priority Date :16/09/2009
(33) Name of priority country :China
(86) International Application No :PCT/CN2010/073048
Filing Date :21/05/2010
(87) International Publication No :WO 2011/032295
(61) Patent of Addition to Application Number :NA
Filing Date :NA
(62) Divisional to Application Number :NA
Filing Date :NA

(71)**Name of Applicant :**
1)ZTE CORPORATION
Address of Applicant :ZTE PLAZA, KEJI ROAD SOUTH, HI-TECH INDUSTRIAL PARK, NANSHAN DISTRICT, SHENZHEN CITY, GUANGDONG PROVINCE 518057, P.R.CHINA
(72)**Name of Inventor :**
1)CHEN, JIANHONG
2)CAO, XIAOFEI

(57) Abstract :
The present invention provides a method for bypassing intelligent services of a called user, applied in the case that a GMSC and a VMSC are not the same MSC. The method comprises: the GMSC sending information to the VMSC as to whether the intelligent services of the called user are bypassed in the GMSC; the VMSC determining whether the intelligent services of the called user are bypassed in the GMSC based on the information as to whether the intelligent services of the called user are bypassed in the GMSC, and determining whether the intelligent services of the called user are bypassed in the VMSC; and when the VMSC determines that the intelligent services of the called user are bypassed in the GMSC and that the intelligent services of the called user are not bypassed in the VMSC, the VMSC not triggering the intelligent services of the called user; when the VMSC determines that the intelligent services of the called user are not bypassed in the GMSC and that the intelligent services of the called user are bypassed in the VMSC, the VMSC sending a call release message to the GMSC. The present invention further provides a system and VMSC for bypassing intelligent services of a called user. The present invention effectively solves the problem of call failure caused when the GMSC and the VMSC are not the same MSC in a simple and easy manner.

No. of Pages : 29 No. of Claims : 13

(12) PATENT APPLICATION PUBLICATION
(19) INDIA
(22) Date of filing of Application :02/04/2012
(21) Application No.1021/DEL/2012 A
(43) Publication Date : 24/07/2015

(54) Title of the invention : EXTRACTION PROCESS FOR REMOVAL OF IMPURITIES FROM AN AQUEOUS MIXTURE

(51) International classification :C07C
(31) Priority Document No :10/455,017
(32) Priority Date :05/06/2003
(33) Name of priority country :U.S.A.
(86) International Application No :NA
Filing Date :NA
(87) International Publication No : NA
(61) Patent of Addition to Application Number :NA
Filing Date :NA
(62) Divisional to Application Number :1032/DEL/2004
Filed on :04/06/2004

(71)**Name of Applicant :**
1)GRUPO PETROTEMEX, S.A. DE C.V.
Address of Applicant :RICARDO MARGAIN NO. 444, TORRE SUR, PISO 16 COL VALLE DEL CAMPESTRE 66265 SAN PEDRO GARZA GARCIA, NUEVO LEAON (81) 8748 1500, MEXICO
(72)**Name of Inventor :**
1)ROBERT LIN
2)MARCEL DE VREEDE

(57) Abstract :
A process to produce an aqueous mixture or a purified aqueous mixture said process comprising the following steps: (a) evaporating a mother liquor comprising a carboxylic acid, a metal catalyst, impurities, water and a solvent in a first evaporator zone to produce a vapor stream and a concentrated mother liquor stream; (b) evaporating said concentrated mother liquor stream in a second evaporator zone to form a solvent rich stream arid a super concentrated mother liquor stream; (c) mixing in a mixing zone a water-solvent solution with said super concentrated mother liquor stream to form said aqueous mixture; (d) optionally separating organic impurities from said aqueous mixture in a solid-liquid separation zone to form said purified aqueous mixture.

No. of Pages : 25 No. of Claims : 8

(12) PATENT APPLICATION PUBLICATION
(21) Application No.175/DEL/2014 A
(19) INDIA
(22) Date of filing of Application :21/01/2014
(43) Publication Date : 24/07/2015

(54) Title of the invention : THE PROCESS OF FABRICATION OF POLYMERIC MEMBRANE USING SILVER NANOPARTICLES DECORATED FUNCTIONALIZED CARBON NANOTUBE FOR WAER PURIFICATION

(51) International classification	:B01D 67/00
(31) Priority Document No	:NA
(32) Priority Date	:NA
(33) Name of priority country	:NA
(86) International Application No	:NA
Filing Date	:NA
(87) International Publication No	: NA
(61) Patent of Addition to Application Number	:NA
Filing Date	:NA
(62) Divisional to Application Number	:NA
Filing Date	:NA

(71)**Name of Applicant :**
1)DIRECTOR GENERAL, DEFENCE RESEARCH & DEVELOPMENT ORGANISATION
Address of Applicant :MINISTRY OF DEFENCE, GOVERNMENT OF INDIA, ROOM NO. 348, B-WING, DRDO BHAWAN, RAJAJI MARG, NEW DELHI 110011, INDIA.
(72)**Name of Inventor :**
1)ROY, DEBMALYA
2)TIWARI, NEERU
3)MUKHOPADHYAY, KINGSUK
4)SAXENA, ARVIND, KUMAR

(57) Abstract :
A process for the fabrication of the polymeric membrane by using silver nanoparticles decorated functionalized carbon nanotube. The present invention relates to an economical and efficient process of fabricating porous polymer membrane by using silver nanoparticles decorated functionalized carbon nanotube without the use of surfactants for antibacterial and heavy metal removal with increased flux rate from contaminated water.

No. of Pages : 25 No. of Claims : 7

(12) PATENT APPLICATION PUBLICATION
(21) Application No.1896/DELNP/2012 A
(19) INDIA
(22) Date of filing of Application :02/03/2012
(43) Publication Date : 24/07/2015

(54) Title of the invention : NON-CONTACT OBJECT INSPECTION

(51) International classification :G01B 11/00
(31) Priority Document No :0915904.7
(32) Priority Date :11/09/2009
(33) Name of priority country :U.K.
(86) International Application No :PCT/GB2010/001675
Filing Date :06/09/2010
(87) International Publication No :WO 2011/030090
(61) Patent of Addition to Application Number :NA
Filing Date :NA
(62) Divisional to Application Number :NA
Filing Date :NA

(71)**Name of Applicant :**
1)RENISHAW PLC
Address of Applicant :NEW MILLS, WOTTON-UNDER-EDGE, GLOUCESTERSHIRE GL 12 8JR, UNITED KINGDOM
(72)**Name of Inventor :**
1)NICHOLAS JOHN WESTON
2)YVONNE RUTH HUDDART

(57) Abstract :
A non-contact method of inspecting the topography of an area of an object via analysis of the phase of a pattern projected on the object. The method comprises taking a first image of the object, obtained from a first perspective, on which an optical pattern is projected, and taking a second image of the object, obtained from a second perspective, on which an optical pat¬tern is projected but in which the optical pattern, as it falls on the object, in the second image differs to that in the first image. The method farther comprises determining data describing the topography of at least a region of the object based on phase data relat¬ing to the phase of at least a region of the optical partem as imaged in the first image. Phase data obtained from a corresponding region of the object as imaged in the second image is used to resolve any ambiguity in the phase or topography data obtained from the first image.

No. of Pages : 53 No. of Claims : 28

(12) PATENT APPLICATION PUBLICATION
(21) Application No.1897/DELNP/2012 A
(19) INDIA
(22) Date of filing of Application :02/03/2012
(43) Publication Date : 24/07/2015

(54) Title of the invention : COMMUNICATION SYSTEM, COMMUNICATION APPARATUS, COMMUNICATION METHOD AND COMPUTER PROGRAM

(51) International classification :H04L 9/32
(31) Priority Document No :2009-208687
(32) Priority Date :09/09/2009
(33) Name of priority country :Japan
(86) International Application No :PCT/JP2010/005323
Filing Date :30/08/2010
(87) International Publication No :WO 2011/030520
(61) Patent of Addition to Application Number :NA
Filing Date :NA
(62) Divisional to Application Number :NA
Filing Date :NA

(71)**Name of Applicant :**
1)SONY CORPORATION
Address of Applicant :1-7-1 KONAN, MINATO-KU, TOKYO 1080075, JAPAN
(72)**Name of Inventor :**
1)TAKEHIKO NAKANO

(57) Abstract :
A source apparatus and a conditional access apparatus are disclosed. The source apparatus may transmit a command to the conditional access apparatus. The conditional access apparatus may transmit a response to the command to the source apparatus. When a time elapsed between transmission of the command by the source apparatus and reception of the response by the source apparatus does not exceed a predetermined round trip time (RTT), a first authorization signal to permit the conditional access apparatus to decrypt encrypted content may be generated. Additionally, whenever a non-RTT condition is met, a second authorization signal to permit the conditional access apparatus to decrypt the content may be generated.

No. of Pages : 113 No. of Claims : 25

(12) PATENT APPLICATION PUBLICATION
(19) INDIA
(22) Date of filing of Application :02/03/2012
(21) Application No.1898/DELNP/2012 A
(43) Publication Date : 24/07/2015

(54) Title of the invention : METHODS OF REDUCING VIRICIDAL ACTIVITY IN PCV-2 COMPOSITIONS AND PCV-2 COMPOSITIONS WITH AN IMPROVED IMMUNOGENICITY

(51) International classification :A61K 39/12
(31) Priority Document No :61/239,192
(32) Priority Date :02/09/2009
(33) Name of priority country :U.S.A.
(86) International Application No :PCT/US2010/047654
Filing Date :02/09/2010
(87) International Publication No :WO 2011/028888
(61) Patent of Addition to Application Number :NA
Filing Date :NA
(62) Divisional to Application Number :NA
Filing Date :NA

(71)**Name of Applicant :**
1)BOEHRINGER INGEHEIM VETMEDICA, INC.
Address of Applicant :2621 NORTH BELT HIGHWAY, ST. JOSEPH, MISSOURI 64506-2002, USA
(72)**Name of Inventor :**
1)CAROLINE ANN KOHLER
2)GUOSONG ZHAO
3)ALI KHAZRAEINAZMPOUR
4)BERND COLIN EICHENMUELLER
5)MARC EICHMEYER
6)GREGORY HAIWICK
7)MERRILL SCHAEFFER

(57) Abstract :
The present invention provides methods of reducing the vircidal activity of a composition comprising a PCV-2 antigen as well as antigenic preparations and immunogenic compositions comprising a PCV-2 antigen, wherein the viricidal activity has been reduced. In addition, the present invention also relates to a method of increasing the immunogenicity of an immunogenic composition comprising a PCV-2 antigen as well as immunogenic composition with an increased immunogenicity.

No. of Pages : 99 No. of Claims : 46

(12) PATENT APPLICATION PUBLICATION
(19) INDIA
(22) Date of filing of Application :02/04/2012
(21) Application No.1014/DEL/2012 A
(43) Publication Date : 24/07/2015

(54) Title of the invention : INJECTION MOLD

(51) International classification :F16K
(31) Priority Document No :2011-093362
(32) Priority Date :19/04/2011
(33) Name of priority country :Japan
(86) International Application No :NA
Filing Date :NA
(87) International Publication No :NA
(61) Patent of Addition to Application Number :NA
Filing Date :NA
(62) Divisional to Application Number :NA
Filing Date :NA

(71)**Name of Applicant :**
1)SUZUKI MOTOR CORPORATION
Address of Applicant :300, TAKATSUKA-CHO, MINAMI-KU, HAMAMATSU-SHI, SHIZUOKA 432-8611 Japan
(72)**Name of Inventor :**
1)KIKUCHI, KAYO

(57) Abstract :
A cavity of an injection mold has a ring shape in a plane view, and has a cross-sectional shape having an upper surface forming a design surface of an Injection-molded product, both side surfaces Continuing from the upper surface, and a bottom surface. When molten resin is injected from a side gate, flows in opposite directions are generated in the cavity and the molten resin meets at a position opposite the side gate in a diameter direction of the cavity, but at this position, the molten resin partly flows into resin reservoirs disposed on both sides. Consequently, since flows horizontal to the upper surface are generated, a luminous material in these flows is also oriented substantially in parallel to the design surface, which can alleviate the disorder of the orientation of the luminous material.

No. of Pages : 27 No. of Claims : 5

(12) PATENT APPLICATION PUBLICATION
(21) Application No.1037/DEL/2012 A
(19) INDIA
(22) Date of filing of Application :03/04/2012
(43) Publication Date : 24/07/2015

(54) Title of the invention : SYSTEMS AND METHODS FOR USE IN CORRECTING INTERMITTENT UTILITY SERVICE OUTAGES

(51) International classification :G06C
(31) Priority Document No :13/086,102
(32) Priority Date :13/04/2011
(33) Name of priority country :U.S.A.
(86) International Application No :NA
Filing Date :NA
(87) International Publication No :NA
(61) Patent of Addition to Application Number :NA
Filing Date :NA
(62) Divisional to Application Number :NA
Filing Date :NA

(71)**Name of Applicant :**
1)GENERAL ELECTRIC COMPANY
Address of Applicant :1 RIVER ROAD, SCHENECTADY, NEW YORK 12345, USA
(72)**Name of Inventor :**
1)THOPPAY, RAJESHBABU KB
2)TRACEY, JAMES S.
3)SOUVANNARATH, MANYPHAY

(57) Abstract :
A system (100) for use in correcting an intermittent utility service outage. The system includes a memory device (110), a processor (115) coupled to the memory device, and a communication interface (135) coupled to the processor. The memory device is configured to store a plurality of service interruptions, wherein each service interruption is associated with at least one site of a plurality of sites. The processor is programmed to determine (320) an interruption occurrence rate corresponding to a first site of the plurality of sites based on service interruptions associated with the first site. The communication interface is configured to transmit (330) an intermittent outage notification to a remote device when the determined interruption occurrence rate exceeds a predetermined maximum interruption occurrence rate.

No. of Pages : 25 No. of Claims : 8

(12) PATENT APPLICATION PUBLICATION
(21) Application No.1229/DEL/2002 A
(19) INDIA
(22) Date of filing of Application :09/12/2002
(43) Publication Date : 24/07/2015

(54) Title of the invention : APROCESS FOR THE PREPARATION OF 2-CHLORO-1,1,1,2-TETRA FLUORO ETHANE BASED SUPERHEATED EMULSION

(51) International classification :C07C
(31) Priority Document No :NA
(32) Priority Date :NA
(33) Name of priority country :NA
(86) International Application No :NA
Filing Date :NA
(87) International Publication No : NA
(61) Patent of Addition to Application Number :NA
Filing Date :NA
(62) Divisional to Application Number :NA
Filing Date :NA

(71)**Name of Applicant :**
1)DIRECTOR GENERAL
Address of Applicant :B-341, SENA BHAWAN DHQ P.O. NEW DELHI-110011. India
(72)**Name of Inventor :**
1)SHYAM GOVIND VAIJAPURKAR
2)KANA RAM SENWAR

(57) Abstract :
The present invention relates to a process for preparation of 2-chloro-1,1,1,2-tera fluoro-ethane (HCFC-124) based superheated emulsion suspended in host matrix as droplet material. The host matrix is specially prepared elastic polyactylamide gel having viscosity of 15 to 25 lakh cp at a temperature of 20°C -25°C. The superheated emulsion of the present invention is stable at ambient temperature. The size of the droplet is about 10 µm and the size of the bubbles formed on detection of neutron is about 200 µm. It is a highly sensitibe neutron detector and responds to neutrons even at 5°C.

No. of Pages : 10 No. of Claims : 14

(12) PATENT APPLICATION PUBLICATION
(21) Application No.1906/DELNP/2012 A
(19) INDIA
(22) Date of filing of Application :02/03/2012
(43) Publication Date : 24/07/2015

(54) Title of the invention : GREASE COMPOSITION

(51) International classification :C10M 125/00
(31) Priority Document No :0904326
(32) Priority Date :10/09/2009
(33) Name of priority country :France
(86) International Application No :PCT/IB2010/054099
Filing Date :10/09/2010
(87) International Publication No :WO 2011/030315
(61) Patent of Addition to Application Number :NA
Filing Date :NA
(62) Divisional to Application Number :NA
Filing Date :NA

(71)**Name of Applicant :**
1)TOTAL RAFFINAGE MARKETING
Address of Applicant :24, COURS MICHELET, F-92800 PUTEAUX, FRANCE
(72)**Name of Inventor :**
1)BARDIN, FRANCK

(57) Abstract :
Grease composition comprising: - one or more mineral, synthetic or natural base oils, - a thickener, - at least one solid lubricant constituted by one or more transition metal chalcogenides with an inorganic fullerene structure, - one or more organophosphorus and/or organophosphorus-sulphur anti-wear and/or extreme pressure additives. Use of a grease composition as defined above in the constant velocity joints of the transmissions of motor vehicles. Constant velocity joints containing a grease as defined above.

No. of Pages : 23 No. of Claims : 21

(12) PATENT APPLICATION PUBLICATION
(21) Application No.1907/DELNP/2012 A
(19) INDIA
(22) Date of filing of Application :02/03/2012
(43) Publication Date : 24/07/2015

(54) Title of the invention : METHOD AND APPARATUS FOR LOCATION FINGERPRINTING

(51) International classification :H04W 64/00
(31) Priority Document No :12/558,931
(32) Priority Date :14/09/2009
(33) Name of priority country :U.S.A.
(86) International Application No :PCT/SE2010/050893
Filing Date :18/08/2010
(87) International Publication No :WO 2011/031206
(61) Patent of Addition to Application Number :NA
Filing Date :NA
(62) Divisional to Application Number :NA
Filing Date :NA

(71)**Name of Applicant :**
1)TELEFONAKTIEBOLAGET LM ERICSSON (PUBL)
Address of Applicant :SE-164 83 STOCKHOLM (SE) Sweden
(72)**Name of Inventor :**
1)KAZMI, MUHAMMAD

(57) Abstract :
Methods and apparatus taught herein facilitate accurate estimation of a mobile terminal's location via location fingerprinting. Specifically, the methods and apparatus obtain a radio fingerprint of the mobile terminal's location based on signal measurements (e.g., signal strength, signal quality, or path loss) performed at a radio frequency distinct from that used to obtain the reference radio fingerprints. The methods and apparatus transform the radio fingerprint, or the reference radio fingerprints, or both, based on that distinction, such as by offsetting signal measurements of the radio fingerprint by an amount determined based on theoretical or experimental models of the dependency of the signal measurements on the radio frequency at which they are performed. The radio fingerprint of the mobile terminal's location may then be compared to the reference radio fingerprints, to accurately estimate the mobile terminal's location despite the radio fingerprint and the reference radio fingerprints having been obtained using different frequencies.

No. of Pages : 27 No. of Claims : 22

(12) PATENT APPLICATION PUBLICATION
(21) Application No.1015/DEL/2012 A
(19) INDIA
(22) Date of filing of Application :02/04/2012
(43) Publication Date : 24/07/2015

(54) Title of the invention : INTEGRATED ELECTRIC METER AND ELECTRIC VEHICLE CHARGING STATION (EVCS)

(51) International classification :H04N
(31) Priority Document No :13/086,937
(32) Priority Date :14/04/2011
(33) Name of priority country :U.S.A.
(86) International Application No :NA
Filing Date :NA
(87) International Publication No :NA
(61) Patent of Addition to Application Number :NA
Filing Date :NA
(62) Divisional to Application Number :NA
Filing Date :NA

(71)**Name of Applicant :**
1)GENERAL ELECTRIC COMPANY
Address of Applicant :1 RIVER ROAD, SCHENECTADY, NEW YORK 12345, USA
(72)**Name of Inventor :**
1)SFAELOS, JIMMY

(57) Abstract :
Embodiments of the invention described herein comprise an integrated electric meter and electric vehicle charging station (EVCS) (206) and methods of using embodiments of the integrated electric meter and EVCS (206) for charging an electric vehicle (112).

No. of Pages : 35 No. of Claims : 10

(12) PATENT APPLICATION PUBLICATION
(19) INDIA
(22) Date of filing of Application :03/04/2012
(21) Application No.1036/DEL/2012 A
(43) Publication Date : 24/07/2015

(54) Title of the invention : METHOD OF ESTABLISHING FILLER METAL CHEMISTRY FOR A FILLER ROD FOR JOINING COMPONENTS

(51) International classification :C07C
(31) Priority Document No :13/083181
(32) Priority Date :08/04/2011
(33) Name of priority country :U.S.A.
(86) International Application No :NA
Filing Date :NA
(87) International Publication No :NA
(61) Patent of Addition to Application Number :NA
Filing Date :NA
(62) Divisional to Application Number :NA
Filing Date :NA

(71)**Name of Applicant :**
1)GENERAL ELECTRIC COMPANY
Address of Applicant :1 RIVER ROAD, SCHENECTADY, NEW YORK 12345, USA
(72)**Name of Inventor :**
1)CUI,YAN
2)DORRIETY, DANIEL JAMES
3)KOTTILINGAM, SRIKANTH CHANDRUDU
4)LIN, DECHAO
5)SAM, HAI BUU
6)TOLLISON, BRIAN LEE

(57) Abstract :
A method of establishing filler metal composition for joining components (40, 42) includes determining an initial desired filler metal chemistry, adjoining a first filler rod (16, 102, 122, 152, 162) having a first portion of the desired filler metal chemistry with a second filler rod (18, 104, 124, 154, 164) having a second portion of the desired filler metal chemistry to form a test filler rod (14, 100, 120, 150, 160), joining a first component (40) formed from a first material to a second component (42) formed from a second material at a weld joint (50) with the test filler rod (14, 100, 120, 150, 160) providing a filler metal portion of the weld joint (50), and testing the weld joint (50) for desired mechanical, chemical, and weldability properties to establish a desired filler metal composition.

No. of Pages : 14 No. of Claims : 10

(12) PATENT APPLICATION PUBLICATION
(19) INDIA
(22) Date of filing of Application :02/03/2012
(21) Application No.1901/DELNP/2012 A
(43) Publication Date : 24/07/2015

(54) Title of the invention : ROUTE DETERMINATION METHOD AND DEVICE

(51) International classification :H04Q 11/00
(31) Priority Document No :200910161960.5
(32) Priority Date :07/09/2009
(33) Name of priority country :China
(86) International Application No :PCT/CN2010/074726
Filing Date :29/06/2010
(87) International Publication No :WO 2011/026374
(61) Patent of Addition to Application Number :NA
Filing Date :NA
(62) Divisional to Application Number :NA
Filing Date :NA

(71)**Name of Applicant :**
1)ZTE CORPORATION
Address of Applicant :ZTE PLAZA, KEJI ROAD SOUTH, HI-TECH INDUSTRIAL PARK, NANSHAN DISTRICT, SHENZHEN CITY, GUANGDONG PROVINCE 518057, P. R. CHINA
(72)**Name of Inventor :**
1)FENG, WEI
2)WANG, ZHIHONG

(57) Abstract :
The present invention discloses the present invention provides a method and device for determining a route comprising: presetting the number N of routes, performing a K shortest paths algorithm after a route query request is received, calculating the routes by group according to the number N of the routes, whenever N routes are calculated, outputting the N calculated routes as a group, and assigning resources to the group of routes; and stopping calculating the routes if a route on which resource matching is successful is obtained from the group of routes, and using the route on which the resource matching is successful as the determined route; otherwise, performing the resource matching on the next group of output routes to determine a route; where N is a positive integer and 1 <N

No. of Pages : 17 No. of Claims : 10

(12) PATENT APPLICATION PUBLICATION
(19) INDIA
(22) Date of filing of Application :02/03/2012
(21) Application No.1902/DELNP/2012 A
(43) Publication Date : 24/07/2015

(54) Title of the invention : A WATER CONTAINER

(51) International classification :C02F 1/00
(31) Priority Document No :0915539.1
(32) Priority Date :07/09/2009
(33) Name of priority country :U.K.
(86) International Application No :PCT/GB2010/001676
Filing Date :03/09/2010
(87) International Publication No :WO 2011/027125
(61) Patent of Addition to Application Number :NA
Filing Date :NA
(62) Divisional to Application Number :NA
Filing Date :NA

(71)**Name of Applicant :**
1)PRITCHARD, MICHAEL
Address of Applicant :THE OLD BAKERY, 7 TUDDENHAM AVENUE, IPSWICH, SUFFOLK IP4 2HE, UNITED KINGDOM
(72)**Name of Inventor :**
1)PRITCHARD, MICHAEL

(57) Abstract :
A jerry can (10) comprises a container housing (11) having four sidewalls (12-15), a base (16) and a top (17). The jerrycan (10) includes a manual pump unit (18) and a water filter cartridge disposed within the housing (11), together with an externally mounted tap (20) coupled to the water filter cartridge. A carrying handle (21) is integrally formed with the top (17). When constructed the jerrycan (10) is sealed and is both water- and air-tight. The container housing (1 1) includes at least one internal brace member (30) consisting of a hollow tube (31) integral with the sidewalls (13,15).

No. of Pages : 19 No. of Claims : 21

(12) PATENT APPLICATION PUBLICATION
(19) INDIA
(22) Date of filing of Application :02/03/2012
(21) Application No.1903/DELNP/2012 A
(43) Publication Date : 24/07/2015

(54) Title of the invention : ISLANDED POWER SYSTEM WITH DISTRIBUTED POWER SUPPLY

(51) International classification :H02J 3/38
(31) Priority Document No :NA
(32) Priority Date : -
(33) Name of priority country :
(86) International Application No :PCT/JP2009/003806
Filing Date :07/08/2009
(87) International Publication No :WO 2011/016092
(61) Patent of Addition to Application Number :NA
Filing Date :NA
(62) Divisional to Application Number :NA
Filing Date :NA

(71)**Name of Applicant :**
1)SHIMIZU CORPORATION
Address of Applicant :2-3, SHIBAURA 1-CHOME, MINATO-KU, TOKYO 105-8007, JAPAN
(72)**Name of Inventor :**
1)YAMANE, TOSHIHIRO
2)NUMATA, SHIGEO
3)MORINO, KIMIO
4)SHIMODA, EISUKE

(57) Abstract :
An islanded power system with a distributed power supply includes: a system abnormality detection unit which outputs an abnormality detection signal when an abnormality in a commercial system is detected; a breaker which interrupts a supply of power from the commercial system when the abnormality detection signal is input from the system abnormality detection unit; a status detection unit which outputs a breaker status signal when the breaker's open state is detected; and an electrical storage device which compensates a fluctuation in load until a rotating machine generator switches to an islanded operation after the supply of power from the commercial system is interrupted by the breaker by starting the supply of power when the breaker status signal is input.

No. of Pages : 19 No. of Claims : 3

(12) PATENT APPLICATION PUBLICATION
(21) Application No.1012/DEL/2012 A
(19) INDIA
(22) Date of filing of Application :02/04/2012
(43) Publication Date : 24/07/2015

(54) Title of the invention : SEGMENTED RECEIVING HOUSING HOLE, SLIDING CORE, TENSIONING DEVICE AND TRACTION MECHANISM DRIVE

(51) International classification :F16K
(31) Priority Document No :102011077740.7
(32) Priority Date :17/06/2011
(33) Name of priority country :Germany
(86) International Application No :NA
Filing Date :NA
(87) International Publication No :NA
(61) Patent of Addition to Application Number :NA
Filing Date :NA
(62) Divisional to Application Number :NA
Filing Date :NA

(71)**Name of Applicant :**
1)SCHAEFFLER TECHNOLOGIES AG & CO. KG
Address of Applicant :INDUSTRIESTRASSE 1-3, 91074 HERZOGENAURACH, GERMANY
(72)**Name of Inventor :**
1)MICHAEL KASTNER

(57) Abstract :
The invention relates to a receiving housing (1) of a hydraulic tensioning device for a traction mechanism drive in an internal combustion engine, having an opening (2) that extends along a longitudinal axis (6) for receiving a piston that is implemented for deflecting a tensioning rail of the traction mechanism drive, wherein the receiving housing (1) that surrounds the opening (2) is a cast component, wherein moreover the opening (2) comprises an inner contour having an inner surface that comprises at least first segments (8) and inclines for removing the workpiece from the mould are provided in the opening (2), wherein second segments (9) comprise surfaces that are directed into the inside of the opening and are aligned in parallel with the longitudinal axis (6). The invention also relates to a sliding core that comprises an outer contour that is complementary to the inner contour of the opening (2) of the receiving housing (1) and fits into the opening (2). A tensioning device having a receiving housing of this type is also included, the said tensioning device comprising a piston that fits into the opening. A traction mechanism drive having a tensioning device of this type is also included, the said tensioning device being supported on a tensioning rail of the traction mechanism drive.

No. of Pages : 15 No. of Claims : 10

(12) PATENT APPLICATION PUBLICATION
(21) Application No.155/DEL/2014 A
(19) INDIA
(22) Date of filing of Application :20/01/2014
(43) Publication Date : 24/07/2015

(54) Title of the invention : HUSKING APPARATUS AND A METHOD OF OPERATION THEREOF

(51) International classification :A23N
(31) Priority Document No :NA
(32) Priority Date :NA
(33) Name of priority country :NA
(86) International Application No :NA
Filing Date :NA
(87) International Publication No : NA
(61) Patent of Addition to Application Number :NA
Filing Date :NA
(62) Divisional to Application Number :NA
Filing Date :NA

(71)**Name of Applicant :**
1)ALOK GORA
Address of Applicant :F-26 UIT COLONY, DHOLA BHATA, AJMER 305001 Rajasthan India
2)NITIN KUMAR
3)SANJAY SHARMA
4)SHADAD MOHAMMED KHAYER
(72)**Name of Inventor :**
1)ALOK GORA
2)NITIN KUMAR
3)SANJAY SHARMA
4)SHADAD MOHAMMED KHAYER

(57) Abstract :
The present invention provides a manual husking apparatus (100) and a method of husking thereof. More particularly, it relates to a husking apparatus (100) for removing the husk from a fruit with a shell, particularly coconuts and the like. The apparatus of the present invention eliminates the hand contact of the operator with the coconut at the time of husking and reduces the energy consumption during operation.

No. of Pages : 16 No. of Claims : 10

(12) PATENT APPLICATION PUBLICATION
(19) INDIA
(22) Date of filing of Application :02/03/2012
(21) Application No.1912/DELNP/2012 A
(43) Publication Date : 24/07/2015

(54) Title of the invention : A WATER GENERATION UNIT AND SYSTEM AND METHOD OF WATER SUPPLY PRODUCTION AND MANAGEMENT IN VEHICLES

(51) International classification :B60H 1/32
(31) Priority Document No :200680
(32) Priority Date :01/09/2009
(33) Name of priority country :Israel
(86) International Application No :PCT/IL2010/000711
Filing Date :30/08/2010
(87) International Publication No :WO 2011/027343
(61) Patent of Addition to Application Number :NA
Filing Date :NA
(62) Divisional to Application Number :NA
Filing Date :NA

(71)**Name of Applicant :**
1)WATER-GEN LTD.
Address of Applicant :17 ALMOG STREET, 60190 NEVE MONOSSON, ISRAEL
(72)**Name of Inventor :**
1)KOHAVI ARYE
2)PERETZ AVI
3)MAIER ELIAHU

(57) Abstract :
A system of managing water production in a vehicle. The system comprises a water conducting element set to receive and conduct water generated as a product of an operation of a vehicle air conditioner of the vehicle to a water container, a gauge that measures the amount of water in the water container, and a manager that receives the measurement and instructs the operation accordingly.

No. of Pages : 94 No. of Claims : 79

(12) PATENT APPLICATION PUBLICATION
(19) INDIA
(22) Date of filing of Application :02/03/2012
(21) Application No.1913/DELNP/2012 A
(43) Publication Date : 24/07/2015

(54) Title of the invention : PYRAZOLE DERIVATIVES WHICH MODULATE STEAROYL-COA DESATURASE

(51) International classification :C07D 403/04
(31) Priority Document No :61/247,634
(32) Priority Date :01/08/2009
(33) Name of priority country :U.S.A.
(86) International Application No :PCT/EP2010/064672
Filing Date :01/08/2010
(87) International Publication No :WO 2011/039358
(61) Patent of Addition to Application Number :NA
Filing Date :NA
(62) Divisional to Application Number :NA
Filing Date :NA

(71)**Name of Applicant :**
1)NOVARTIS AG
Address of Applicant :LICHTSTRASSE 35, CH-4056 BASEL, SWITZERLAND
2)XENON PHARMACEUTICALS INC.
(72)**Name of Inventor :**
1)DALES NATALIE
2)FU JIANMIN
3)JIA QI
4)POKROVSKAIA NATALIA
5)SUN SHAOYI
6)ZHANG ZAIHUI

(57) Abstract :
The present invention provides heterocyclic derivatives that modulate the activity of stearoyl-CoA desaturase. Methods of using such derivatives to modulate the activity of stearoyl-CoA desaturase and pharmaceutical compositions comprising such derivatives are also encompassed.

No. of Pages : 108 No. of Claims : 40

(12) PATENT APPLICATION PUBLICATION
(19) INDIA
(22) Date of filing of Application :02/03/2012
(21) Application No.1914/DELNP/2012 A
(43) Publication Date : 24/07/2015

(54) Title of the invention : TOUGH COATED HARD PARTICLES CONSOLIDATED IN A TOUGH MATRIX MATERIAL

(51) International classification :C04B 35/628
(31) Priority Document No :61/231,149
(32) Priority Date :04/08/2009
(33) Name of priority country :U.S.A.
(86) International Application No :PCT/US2010/044241
Filing Date :03/08/2010
(87) International Publication No :WO 2011/017318
(61) Patent of Addition to Application Number :NA
Filing Date :NA
(62) Divisional to Application Number :NA
Filing Date :NA

(71)**Name of Applicant :**
1)ALLOMET CORPORATION
Address of Applicant :509 HAHNTOWN-WENDEL ROAD, NORTH HUNTINGTON, PA 15642, USA
(72)**Name of Inventor :**
1)KEANE JOHN M.
2)GERMAN RANDALL M.

(57) Abstract :
Consolidated materials comprising a plurality of coated particles dispersed in a tough matrix material are disclosed. The coated particles include a plurality of core particles having an intermediate layer that substantially surrounds each of the core particles. An optional outer layer may be present on the intermediate layer. A matrix contains or substantially contains each of the coated particles, and is formed from at least one third compound including a mixture of W, WC, and/or W2C with Co. The amount of Co in the at least one third compound may range from greater than 0 to about 20 weight %. Methods for providing consolidated materials, and articles comprising such consolidated materials are also disclosed.

No. of Pages : 48 No. of Claims : 22

(12) PATENT APPLICATION PUBLICATION
(21) Application No.119/DEL/2015 A
(19) INDIA
(22) Date of filing of Application :14/01/2015
(43) Publication Date : 24/07/2015

(54) Title of the invention : INERTIA BRAKING PAYOUT DEVICE AND PACKAGE SYSTEM

(51) International classification :b65D
(31) Priority Document No :61/928545
(32) Priority Date :17/01/2014
(33) Name of priority country :U.S.A.
(86) International Application No :NA
Filing Date :NA
(87) International Publication No : NA
(61) Patent of Addition to Application Number :NA
Filing Date :NA
(62) Divisional to Application Number :NA
Filing Date :NA

(71)**Name of Applicant :**
1)HONEYWELL INTERNATIONAL INC.
Address of Applicant :101 Columbia Road, P. O. Box 2245, Morristown, N.J. 07962-2245, U.S.A.
(72)**Name of Inventor :**
1)BRIAN MEACHUM
2)DANIEL D. DUNAR

(57) Abstract :
A payout device comprising a carton, an elongated rotatable member and a support assembly. The carton having a plurality of panels enclosing an interior compartment. At least one panel having an opening providing an egress for elongated flexible material stored within the interior compartment. The elongated member being rotatably supported in a substantially horizontal direction within the carton by the support assembly. The support assembly having a slot with a generally teardrop shape. The teardrop shape having a larger diameter end and a smaller diameter end such that a portion of the rotatable member is slidable therebetween. The larger diameter end sized to allow the rotatable member to rotate and the smaller diameter end having a size smaller than the circumference of the rotatable member. The slot positioned on the ! carton with the larger diameter end being elevated and closer to the opening than the I smaller diameter end.

No. of Pages : 20 No. of Claims : 15

(12) PATENT APPLICATION PUBLICATION
(19) INDIA
(22) Date of filing of Application :02/03/2012
(21) Application No.1915/DELNP/2012 A
(43) Publication Date : 24/07/2015

(54) Title of the invention : TIRE

(51) International classification :B60C 11/01
(31) Priority Document No :2009-200815
(32) Priority Date :31/08/2009
(33) Name of priority country :Japan
(86) International Application No :PCT/JP2010/051107
Filing Date :28/01/2010
(87) International Publication No :WO 2011/024492
(61) Patent of Addition to Application Number :NA
Filing Date :NA
(62) Divisional to Application Number :NA
Filing Date :NA

(71)**Name of Applicant :**
1)BRIDGESTONE CORPORATION
Address of Applicant :10-1, KYOBASHI 1-CHOME, CHUO-KU, TOKYO 104-8340, JAPAN
(72)**Name of Inventor :**
1)KOJIMA TAKAAKI
2)KIWAKI YUKIHIRO

(57) Abstract :
A pneumatic tire (1) comprises a tread (50),iSide walls (60), and buttress portions (70). In a cross-section of the pneumatic tire (1) in the tread width direction (TW), if the point at which a first curved line (Rl) which follows the curvature of the surface of the tread (50) and a second curved line (R2) which follows the curvature of the surface of a buttress portion (70) intersect is defined as an imaginary point (IP) and also if the point at which a straight line (L) passing through the imaginary point (IP) and substantially perpendicular to the carcass (20) intersects the surface of the pneumatic tire (1) is defined as an intersection point (NP), the pneumatic tire (1) has a recessed shoulder region (US) including the intersection point (NP) and having a predetermined width. The recessed shoulder region (US) is provided with recesses (80) recessed from the surface of the pneumatic tire (1) and also with a surface portion (90) in which no recess (80) is formed. The recessed shoulder region (US) extends in the tire circumference direction (TC).

No. of Pages : 40 No. of Claims : 15

(12) PATENT APPLICATION PUBLICATION
(21) Application No.1916/DELNP/2012 A
(19) INDIA
(22) Date of filing of Application :02/03/2012
(43) Publication Date : 24/07/2015

(54) Title of the invention : HYBRID CONSTRUCTION MACHINE

(51) International classification :E02F 9/20
(31) Priority Document No :2010-120797
(32) Priority Date :26/05/2010
(33) Name of priority country :Japan
(86) International Application No :PCT/JP2011/061689
Filing Date :20/05/2011
(87) International Publication No :WO 2011/148877
(61) Patent of Addition to Application Number :NA
Filing Date :NA
(62) Divisional to Application Number :NA
Filing Date :NA

(71)**Name of Applicant :**
1)HITACHI CONSTRUCTION MACHINERY CO., LTD.
Address of Applicant :5-1, KORAKU 2-CHOME, BUNKYO-KU, TOKYO 112-8563 JAPAN
(72)**Name of Inventor :**
1) YOSHIDA HAJIME
2) ISHII HAJIME

(57) Abstract :
Provided is a hybrid construction machine capable of facilitating the hybridization (conversion, redesigning, etc. into a hybrid construction machine) even for construction machines of the minimal tail swing radius type or the minimal swing radius type. A hybrid mini-shovel of the minimal tail swing radius type comprises an engine 11, a hydraulic pump 21 whose input shaft 21a is coaxially connected to the output shaft 11a of the engine 11, a generator/motor 31 whose rotating shaft 31a is connected to the output shaft 11a of the engine 11 and the input shaft 21a of the hydraulic pump 21 via a gear mechanism 6, and a battery 33 which receives and supplies electric power from/to the generator/motor 31. The generator/motor 31 is placed at a vertical position where its lower end is situated above the shaft center of the input shaft 21a of the hydraulic pump 21, and when viewed from above at a horizontal position where it overlaps with the hydraulic pump 21.

No. of Pages : 76 No. of Claims : 4

(12) PATENT APPLICATION PUBLICATION
(19) INDIA
(22) Date of filing of Application :02/03/2012
(21) Application No.1917/DELNP/2012 A
(43) Publication Date : 24/07/2015

(54) Title of the invention : CARTRIDGE ASSEMBLY FOR ELECTROSURGICAL DEVICES, ELECTROSURGICAL UNIT AND METHODS OF USE THEREOF

(51) International classification :A61B 18/12
(31) Priority Document No :61/240,562
(32) Priority Date :08/09/2009
(33) Name of priority country :U.S.A.
(86) International Application No :PCT/US2010/048115
Filing Date :08/09/2010
(87) International Publication No :WO 2011/031748
(61) Patent of Addition to Application Number :NA
Filing Date :NA
(62) Divisional to Application Number :NA
Filing Date :NA

(71)**Name of Applicant :**
1)SALIENT SURGICAL TECHNOLOGIES, INC.
Address of Applicant :180 INTERNATIONAL DRIVE, PORTSMOUTH, NEW HAMPSHIRE 03801, USA
(72)**Name of Inventor :**
1)GREELEY ROGER D.
2)CONLEY BRIAN M.
3)FLANAGAN DAVID J.
4)GIFFORD AARON J.
5)MILLER STEVEN G.
6)MURAKAMI BLAINE T.
7)ROBINSON THOMAS P.

(57) Abstract :
The invention provides a cartridge assembly to couple a tissue treatment device with an electrosurgical unit, with the cartridge assembly operable with a power delivery apparatus and a fluid delivery apparatus of the electrosurgical unit. The invention also provides an electrosurgical unit comprising a power delivery apparatus and a fluid delivery apparatus operable with the cartridge assembly and a system thereof.

No. of Pages : 97 No. of Claims : 46

(12) PATENT APPLICATION PUBLICATION
(19) INDIA
(22) Date of filing of Application :03/04/2012
(21) Application No.1026/DEL/2012 A
(43) Publication Date : 24/07/2015

(54) Title of the invention : DEVICES AND METHODS FOR INFRARED (IR) BASED QUANTITATION OF BIOMOLECULES

(51) International classification :G06N
(31) Priority Document No :61/475,434
(32) Priority Date :14/04/2011
(33) Name of priority country :U.S.A.
(86) International Application No :NA
Filing Date :NA
(87) International Publication No :NA
(61) Patent of Addition to Application Number :NA
Filing Date :NA
(62) Divisional to Application Number :NA
Filing Date :NA

(71)**Name of Applicant :**
1)EMD MILLIPORE CORPORATION
Address of Applicant :290 CONCORD ROAD, BILLERICA, MA 01821, U.S.A.
(72)**Name of Inventor :**
1)ELENA CHERNOKALSKAYA
2)VIVEK JOSHI
3)PHILLIP CLARK
4)CHRISTOPHER UTZAT
5)RYAN AMARA
6)TIMOTHY SCOTT RIDER

(57) Abstract :
The present invention provides methods for quantitating one or more biomolecules in a sample using IR based techniques, sample holder devices for use in such methods as well as methods for manufacturing such sample holder devices.

No. of Pages : 49 No. of Claims : 24

(12) PATENT APPLICATION PUBLICATION
(19) INDIA
(22) Date of filing of Application :02/03/2012
(21) Application No.1923/DELNP/2012 A
(43) Publication Date : 24/07/2015

(54) Title of the invention : RESISTOR WITH TEMPERATURE COEFFICIENT OF RESISTANCE (TCR) COMPENSATION

(51) International classification :H01C 7/06
(31) Priority Document No :61/239,962
(32) Priority Date :04/09/2009
(33) Name of priority country :U.S.A.
(86) International Application No :PCT/US2010/047628
Filing Date :02/09/2010
(87) International Publication No :WO 2011/028870
(61) Patent of Addition to Application Number :NA
Filing Date :NA
(62) Divisional to Application Number :NA
Filing Date :NA

(71)**Name of Applicant :**
1)VISHAY DALE ELECTRONICS, INC.
Address of Applicant :1122 23RD STREET, COLUMBUS, NEBRASKA 68601, USA
(72)**Name of Inventor :**
1)SMITH, CLARK L.
2)BERTSCH, THOMAS L.
3)WYATT, TODD L.
4)VEIK, THOMAS L.

(57) Abstract :
A current sense resistor and a method of manufacturing a current sensing resistor with temperature coefficient of resistance (TCR) compensation is disclosed The resistor has a resistive strip disposed between two conductive strips A pair of main terminals and a pair of voltage sense terminals are formed in the conductive strips A pair of rough TCR calibration slots are located between the main terminals and the voltage sense terminals, each of the rough TCR calibration slots have a depth selected to obtain a negative starting TCR value observed at the voltage sense terminals A fine TCR calibration slot is formed between the pair of voltage sense terminals The fine TCR calibration slot has a depth selected to obtain a TCR value observed at the voltage sense terminals that approaches zero The resistance calibration slot has a depth selected to calibrate a resistance value of the resistor.

No. of Pages : 19 No. of Claims : 25

(12) PATENT APPLICATION PUBLICATION
(19) INDIA
(22) Date of filing of Application :02/03/2012
(21) Application No.1924/DELNP/2012 A
(43) Publication Date : 24/07/2015

(54) Title of the invention : RECHARGEABLE ELECTROCHEMICAL CELL SYSTEM WITH A CHARGING ELECTRODE CHARGE/DISCHARGE MODE SWITCHING IN THE CELLS

(51) International classification :H01M 8/04
(31) Priority Document No :61/243,970
(32) Priority Date :18/09/2009
(33) Name of priority country :U.S.A.
(86) International Application No :PCT/US2010/049361
Filing Date :17/08/2010
(87) International Publication No :WO 2011/035176
(61) Patent of Addition to Application Number :NA
Filing Date :NA
(62) Divisional to Application Number :NA
Filing Date :NA

(71)**Name of Applicant :**
1)FLUIDIC, INC.
Address of Applicant :8455 NORTH 90TH STREET, SUITE 4, SCOTTSDALE, AZ 85258, USA
(72)**Name of Inventor :**
1)FRIESEN, CODY, A.
2)KRISHNAN, RAMKUMAR
3)FRIESEN, GRANT

(57) Abstract :
One aspect of the present invention provides a rechargeable electrochemical cell system (10) for generating electrical current using a fuel and an oxidant. The cell system comprises N electrochemical cells (12) each comprising a fuel electrode (14), an oxidant electrode (16), a charging electrode (18), and an ionically conductive medium communicating the electrodes, wherein N is an integer greater than or equal to two. Any number of cells may be used. The cell system (10) includes a plurality of switches (20) that are switcheable to a discharge mode coupling the oxidant electrode (16) of each cell (12) to the fuel electrode (14) of the subsequent cell (12) a charge mode coupling the charging electrode (19) of each cell (12) to the fuel electrode (14) of the subsequent cell (12), and a bypass mode coupling charging electrode (18) or the oxidant electrode (16) of a previous cell (12) to the fuel electrode (14) of a subsequent cell (12).

No. of Pages : 35 No. of Claims : 10

(12) PATENT APPLICATION PUBLICATION
(21) Application No.1925/DELNP/2012 A
(19) INDIA
(22) Date of filing of Application :02/03/2012
(43) Publication Date : 24/07/2015

(54) Title of the invention : METHODS, SECURE ELEMENT, SERVER, COMPUTER PROGRAMS AND COMPUTER PROGRAM PRODUCTS FOR IMPROVED APPLICATION MANAGEMENT

(51) International classification :H04W 4/00
(31) Priority Document No :NA
(32) Priority Date :NA
(33) Name of priority country :NA
(86) International Application No :PCT/SE2009/051378
Filing Date :04/12/2009
(87) International Publication No :WO 2011/068448
(61) Patent of Addition to Application Number :NA
Filing Date :NA
(62) Divisional to Application Number :NA
Filing Date :NA

(71)**Name of Applicant :**
1)TELEFONAKTIEBOLAGET LM ERICSSON (PUBL)
Address of Applicant :SE-164 83 STOCKHOLM (SE) Sweden
(72)**Name of Inventor :**
1)ARVIDSSON, PETTER
2)ELD, MATTIAS

(57) Abstract :
It presented a method, performed in a secure element, the secure element being arranged to enable user applications of the secure element to verify authenticity of incoming user application commands. The method comprises the steps of: receiving a command from a secure element reader for a user application on the secure element, the command comprising an application identifier of the user application; determining whether there is a matching user application in the secure element; invoking the matching user application; and establishing, when there is an absence of any matching user applications, a communication channel with a remote application manager server and sending an absent user application message to the application manager server indicating that the user application has been requested on the secure element. A corresponding secure element, method for an application manager server and application manager server are also presented.

No. of Pages : 46 No. of Claims : 16

(12) PATENT APPLICATION PUBLICATION
(21) Application No.1918/DELNP/2012 A
(19) INDIA
(22) Date of filing of Application :02/03/2012
(43) Publication Date : 24/07/2015

(54) Title of the invention : METHOD, DEVICE AND SYSTEM FOR MEASURING NOISE FLOOR OF BASE STATION ANTENNA PORT

(51) International classification :H04W 52/00
(31) Priority Document No :201010205961.8
(32) Priority Date :21/06/2010
(33) Name of priority country :China
(86) International Application No :PCT/CN2010/079193
Filing Date :26/11/2010
(87) International Publication No :WO 2011/160395
(61) Patent of Addition to Application Number :NA
Filing Date :NA
(62) Divisional to Application Number :NA
Filing Date :NA

(71)**Name of Applicant :**
1)ZTE CORPORATION
Address of Applicant :ZTE PLAZA, KEJI ROAD SOUTH, HI-TECH INDUSTRIAL PARK, NANSHAN DISTRICT, SHENZHEN CITY, GUANGDONG PROVINCE 518057, P. R. CHINA
(72)**Name of Inventor :**
1)LI, JINGHAI

(57) Abstract :
The present invention discloses a method, an apparatus and a system for measuring background noise of a base station antenna interface, used to implement real-time measurement of the signal strength of background noise of the base station antenna interface. The method for measuring the background noise of the base station antenna interface includes: when confirming that a number of configured carriers is smaller than a maximum number of configurable carriers according to carrier frequency configuration information of a base station transceiver, determining idle carrier frequencies that are configurable for use but are not configured for use; selecting an idle carrier frequency to be measured used for measuring the background noise of the base station antenna interface from the determined various idle carrier frequencies, and synchronizing a configuration parameter of the idle carrier frequency to be measured to a base station transceiver; taking a received signal strength indication (RSSI) value of the idle carrier frequency to be measured that is measured and reported by the base station transceiver according to the configuration parameter as signal strength of the background noise of the base station antenna interface.

No. of Pages : 24 No. of Claims : 11

(12) PATENT APPLICATION PUBLICATION
(21) Application No.1919/DELNP/2012 A
(19) INDIA
(22) Date of filing of Application :02/03/2012
(43) Publication Date : 24/07/2015

(54) Title of the invention : METHOD AND DEVICE FOR DETECTING SPATIAL THERMAL NOISE AT THE POSITION OF BASE STATION ANTENNA

(51) International classification :H04B 17/00
(31) Priority Document No :201010209851.9
(32) Priority Date :22/06/2010
(33) Name of priority country :China
(86) International Application No :PCT/CN2010/079662
Filing Date :10/12/2010
(87) International Publication No :WO 2011/160399
(61) Patent of Addition to Application Number :NA
Filing Date :NA
(62) Divisional to Application Number :NA
Filing Date :NA

(71)**Name of Applicant :**
1)ZTE CORPORATION
Address of Applicant :ZTE PLAZA, KEJI ROAD SOUTH, HI-TECH INDUSTRIAL PARK, NANSHAN DISTRICT, SHENZHEN CITY, GUANGDONG PROVINCE 518057, P. R. CHINA
(72)**Name of Inventor :**
1)LI, JINGHAI
2)LUO, JUN

(57) Abstract :
The present invention discloses a method and a device for detecting spatial thermal noise at a position where a base station antenna is located, in which the main content includes: newly establishing a baseband processing link using a section of detection frequency band in an idle state in the working frequency band of the transceiver in the base station, filtering the mixed signal including a carrier signal and spatial thermal noise using the newly established baseband processing link to filter out the carrier information in the mixed signal, and detecting the signal strength of the obtained spatial thermal noise, to achieve the object of detecting the signal strength of the spatial thermal noise in the detection frequency band in real-time.

No. of Pages : 18 No. of Claims : 11

(12) PATENT APPLICATION PUBLICATION
(19) INDIA
(22) Date of filing of Application :06/03/2012
(21) Application No.1987/DELNP/2012 A
(43) Publication Date : 24/07/2015

(54) Title of the invention : VALVE STEM NUT WEAR ANALYSIS APPARATUS AND METHOD

(51) International classification :G01B 5/18
(31) Priority Document No :61/235,204
(32) Priority Date :19/08/2009
(33) Name of priority country :U.S.A.
(86) International Application No :PCT/US2010/045914
Filing Date :18/08/2010
(87) International Publication No :WO 2011/022496
(61) Patent of Addition to Application Number :NA
Filing Date :NA
(62) Divisional to Application Number :NA
Filing Date :NA

(71)**Name of Applicant :**
1)LOOP LLC
Address of Applicant :137 NORTHPARK BOULEVARD, COVINGTON, LOUISIANA 70433, USA
2)SHAW INTELLECTUAL PROPERTY HOLDINGS,LLC
(72)**Name of Inventor :**
1)CHRIS A. LABAT
2)CARTER REAMES, JR.

(57) Abstract :
A method and apparatus for measuring stem nut wear in a valve having a threaded valve stem that is positioned to engage the threads of a stem nut. In a preferred embodiment, a tool is mounted on the stem nut, wherein the tool rotates when the stem nut rotates. The tool indicates a measurement of stem nut rotation. An indicator indicates stem movement. The stem nut is rotated and the amount of percent wear is observed. Rotation continues until the stem begins to move. The tool provides a reading when the stem begins to move that indicates an amount of stem nut wear.

No. of Pages : 61 No. of Claims : 48

(12) PATENT APPLICATION PUBLICATION
(19) INDIA
(22) Date of filing of Application :06/03/2012
(21) Application No.1988/DELNP/2012 A
(43) Publication Date : 24/07/2015

(54) Title of the invention : CONTROLLED DISCHARGE OSTOMY APPLIANCE AND SHIELD THEREFOR

(51) International classification :A61F 5/44
(31) Priority Document No :61/276,352
(32) Priority Date :11/09/2009
(33) Name of priority country :U.S.A.
(86) International Application No :PCT/US2010/048211
Filing Date :09/09/2010
(87) International Publication No :WO 2011/031822
(61) Patent of Addition to Application Number :NA
Filing Date :NA
(62) Divisional to Application Number :NA
Filing Date :NA

(71)**Name of Applicant :**
1)CONVATEC TECHNOLOGIES INC.
Address of Applicant :SUITE 250, 3993 HOWARD HUGHES PARKWAY, LAS VEGAS, NV 89169-6754, U.S.A.
(72)**Name of Inventor :**
1)TINH NGUYEN-DEMARY
2)JOHN CLINE
3)JOHN BLUM
4)GARY STACEY
5)PHILIP DAVIES
6)TREVOR BECKETT

(57) Abstract :
A controlled discharge ostomy appliance assembly comprises (i) a stoma seal that is self-urging with a dynamic damping characteristic that resists changes of seal volume, (ii) a press-fit coupling member displaceable from an unlocked position to a locked position as part of a press-fit process, and (iii) a single-use frangible portion. The assembly further includes a protector shield removably fastened to the appliance forming a combined assembly therewith. The protector shield comprises (i) a seal displacer manipulable for displacing the stoma seal to a non-operative position ready for fitting, (ii) a substantially rigid coupling member guard portion for protecting the state of the coupling member, and (iii) a bracing portion for bracing the single-use frangible portion.

No. of Pages : 61 No. of Claims : 37

(12) PATENT APPLICATION PUBLICATION
(21) Application No.1921/DELNP/2012 A
(19) INDIA
(22) Date of filing of Application :02/03/2012
(43) Publication Date : 24/07/2015

(54) Title of the invention : TRUSTED PAIRED-DEVICE INITIAL CONNECTION ASSISTANCE

(51) International classification :H04W 48/14
(31) Priority Document No :NA
(32) Priority Date :NA
(33) Name of priority country :NA
(86) International Application No :PCT/SE2009/051254
Filing Date :05/11/2009
(87) International Publication No :WO 2011/056102
(61) Patent of Addition to Application Number :NA
Filing Date :NA
(62) Divisional to Application Number :NA
Filing Date :NA

(71)**Name of Applicant :**
1)TELEFONAKTIEBOLAGET LM ERICSSON (PUBL)
Address of Applicant :SE-164 83 STOCKHOLM (SE) Sweden
(72)**Name of Inventor :**
1)SELEN, YNGVE
2)KRONANDER, JONAS

(57) Abstract :
The present invention relates to a solution for wireless communication and in particular for facilitating connection to a radio access network. This is provided in a number of aspects such as method, devices, and system. The solution comprises using a local short range communication connection between two user equipments, UEs, (101, 102) for assisting each other in connecting to a radio access network, RAN (103). One UE is often an always on UE and one is often a sporadic use UE. The always on UE has normally an active connection with the RAN and has knowledge about valid radio access technologies, RAT. The sporadic use UE may connect with the always on UE with a trusted connection and negotiate for information about available RATs and use this information for faster connection with the RAN. The two UEs may together scan for available RATs by dividing frequency bands and each searching different parts and thus reducing the scan process and reducing resource use.

No. of Pages : 22 No. of Claims : 15

(12) PATENT APPLICATION PUBLICATION
(19) INDIA
(22) Date of filing of Application :02/03/2012
(21) Application No.1922/DELNP/2012 A
(43) Publication Date : 24/07/2015

(54) Title of the invention : DEVICE FOR TREATING EXHAUST GAS CONTAINING SOOT PARTICLES

(51) International classification :B03C 3/013
(31) Priority Document No :10 2009 041 091.0
(32) Priority Date :14/09/2009
(33) Name of priority country :Germany
(86) International Application No :PCT/EP2010/062475
Filing Date :26/08/2010
(87) International Publication No :WO 2011/029730
(61) Patent of Addition to Application Number :NA
Filing Date :NA
(62) Divisional to Application Number :NA
Filing Date :NA

(71)**Name of Applicant :**
1)EMITEC GESELLSCHAFT FUR EMISSIONSTECHNOLOGIE MBH
Address of Applicant :HAUPTSTRASSE 128, 53797 LOHMAR(DE) Germany
(72)**Name of Inventor :**
1)MAUS, WOLFGANG
2)HIRTH, PETER
3)BRUCK, ROLF

(57) Abstract :
The invention relates to a device (1) for treating exhaust gas containing soot particles (2), comprising at least one ionization element (4) for ionizing soot particles (2) and at least one precipitation device (26) having a surface precipitator (6) for depositing ionized soot particles (2), wherein the at least one surface precipitator (6) comprises two or more at least partially electrically conductive neutralization regions (5) that are electrically insulated from each other in order to neutralize ionized soot particles (2). The invention further relates to a method for converting soot particles (2) of an exhaust gas, wherein different electric potentials are applied.

No. of Pages : 38 No. of Claims : 12

(12) PATENT APPLICATION PUBLICATION
(21) Application No.1991/DELNP/2005 A
(19) INDIA
(22) Date of filing of Application :10/05/2005
(43) Publication Date : 24/07/2015

(54) Title of the invention : A METHOD FOR ACQUIRING DATA BY MAGENETIC RESONANCE AND AN APPARATUS THEREOF

(51) International classification :A61B5/055
(31) Priority Document No :09/041,981
(32) Priority Date :13/03/1998
(33) Name of priority country :U.S.A.
(86) International Application No :PCT/US99/05532
Filing Date :13/09/2000
(87) International Publication No : NA
(61) Patent of Addition to Application Number :NA
Filing Date :NA
(62) Divisional to Application Number :NA
Filing Date :NA

(71)**Name of Applicant :**
1)SKELSCAN, INC
Address of Applicant :111, BLAKE STREET, NEWTON, MASSACHUSETTS 02460, USA
(72)**Name of Inventor :**
1)JEROME. L. ACKERMAN
2)MELVIN J. GLIMCHER
3)YAOTANG WU,

(57) Abstract :
A method for acquiring data by magnetic resonance, wherein a sample material comprising a first isotope is subjected to a main magnetic field, the method further comprising: subjecting the sample material to a pulse sequence comprising: gfust magnetic field gradient pulse having a start and an end; I a RF excitation pulse for exciting the fust isotope, the RF excitation pulse being generated between the start and the end of the first magnetic field gradient pulse; acquiring RF signals emitted by the excited fust isotope after the RF excitation pulse and before the end of the first magnetic field gradient pulse; processing the RF signals to generate data representative of the spatial distribution of the first isotope within the sample material.

No. of Pages : 38 No. of Claims : 47

(12) PATENT APPLICATION PUBLICATION
(21) Application No.1991/DELNP/2012 A
(19) INDIA
(22) Date of filing of Application :06/03/2012
(43) Publication Date : 24/07/2015

(54) Title of the invention : PROCESS FOR PRODUCING ACETIC ACID AND DIMETHYL ETHER USING A ZEOLITE CATALYST

(51) International classification :C07C 41/09
(31) Priority Document No :09252123.6
(32) Priority Date :03/09/2009
(33) Name of priority country :EUROPEAN UNION
(86) International Application No :PCT/GB2010/001648
Filing Date :31/08/2010
(87) International Publication No :WO 2011/027105
(61) Patent of Addition to Application Number :NA
Filing Date :NA
(62) Divisional to Application Number :NA
Filing Date :NA

(71)**Name of Applicant :**
1)BP CHEMICALS LIMITED
Address of Applicant :CHERTSEY ROAD, SUNBURY ON THAMES, MIDDLESEX TW16 7BP, UNITED KINGDOM
(72)**Name of Inventor :**
1)BERIAN JOHN DANIEL
2)DAVID JOHN LAW
3)JOHN GLENN SUNLEY

(57) Abstract :
A process for the production of acetic acid and dimethyl ether by contacting methanol and methyl acetate with a cataly, composition at a temperature in the range 140 to 250 0C wherein the catalyst composition contains a zeolite having a 2-dimensional channel system comprising at least one channel which has a 10-membered ring.

No. of Pages : 20 No. of Claims : 22

(12) PATENT APPLICATION PUBLICATION
(19) INDIA
(22) Date of filing of Application :06/03/2012
(21) Application No.1992/DELNP/2012 A
(43) Publication Date : 24/07/2015

(54) Title of the invention : COMPOSITION AND METHOD FOR IMAGING STEM CELLS

(51) International classification :C12Q 1/69
(31) Priority Document No :12/555,901
(32) Priority Date :09/09/2009
(33) Name of priority country :U.S.A.
(86) International Application No :PCT/EP2010/063054
Filing Date :06/09/2010
(87) International Publication No :WO 2011/029798
(61) Patent of Addition to Application Number :NA
Filing Date :NA
(62) Divisional to Application Number :NA
Filing Date :NA

(71)**Name of Applicant :**
1)GENERAL ELECTRIC COMPANY
Address of Applicant :1 RIVER ROAD, SCHENECTADY, NEW YORK 12345, U.S.A.
(72)**Name of Inventor :**
1)SRABANI BHAUMIK
2)SANJIV SAM GAMBHIR
3)SHAHRIAR YAGHOUBI
4)NATESH PARASHURAMA
5)BYEONG-CHEOL AHN
6)RAMASAMY PAULMURUGAN

(57) Abstract :
An expression vector, comprising a first reporter nucleic acid sequence operably linked to a first expression control sequence comprising a promoter; and a second reporter nucleic acid sequence operably linked to a second expression control sequence that comprises a response element that is activated or inactivated as one or more of the cells differentiate or dedifferentiate. Methods and kits for imaging and monitoring stem cells comprising the expression vector are also provided.

No. of Pages : 45 No. of Claims : 20

(12) PATENT APPLICATION PUBLICATION
(21) Application No.144/DEL/2014 A
(19) INDIA
(22) Date of filing of Application :17/01/2014
(43) Publication Date : 24/07/2015

(54) Title of the invention : PROCESS FOR NOVEL 2-(3, 5-DIMETHYL-1H-PYRAZOL-1-YL)-1-ARYLETHANONES AS DNA PHOTOCLEAVING AGENTS

(51) International classification :C05G
(31) Priority Document No :NA
(32) Priority Date :NA
(33) Name of priority country :NA
(86) International Application No :NA
Filing Date :NA
(87) International Publication No : NA
(61) Patent of Addition to Application Number :NA
Filing Date :NA
(62) Divisional to Application Number :NA
Filing Date :NA

(71)**Name of Applicant :**
1)VINOD KUMAR
Address of Applicant :DEPARTMENT OF CHEMISTRY, M. M. UNIVERSITY, MULLANA-AMBALA, HARYANA India
2)KAMALNEET KAUR
3)VIKAS BENIWAL
4)GIRISH KUMAR GUPTA
5)AKHILESH KUMAR GUPTA
6)VINOD KUMAR
(72)**Name of Inventor :**
1)VINOD KUMAR
2)KAMALNEET KAUR
3)VIKAS BENIWAL
4)GIRISH KUMAR GUPTA
5)AKHILESH KUMAR GUPTA
6)VINOD KUMAR

(57) Abstract :
Process for Novel 2-(3,5-dimethvl-1H-pvrazo1-1-vl)-l-arvlethanones as DNA photocleavinA gents The present invention discloses the regioselective synthetic approach to novel 2-(3,5- dimethyl-I H-pyrazol- I -yl)- 1 -arylethanones under facile and extremely mild solvent free conditions. Among a series of compounds, 1-(4-bromopheny1)-2-(3,5-dimethyl-1H -pyrazol- 1 -yl)ethanone and 2-(3,5-dimethyl- 1 H-pyrazol- 1 -yl)- 1 -(4-nitropheny1)ethanone were found to be highly active which completely degraded the both forms of DNA (SC and OC), even at a very low 1 pg concentration only under irradiation of UV light. Compounds can be used as such or be the basis of some novel efficient bioactive agents in future.

No. of Pages : 12 No. of Claims : 6

(12) PATENT APPLICATION PUBLICATION
(21) Application No.192/DEL/2014 A
(19) INDIA
(22) Date of filing of Application :21/01/2014
(43) Publication Date : 24/07/2015

(54) Title of the invention : A PROCESS FOR PREPARATION OF FIBER REINFORCED CARBON-SILICON CARBIDE (C-SIC) COMPOSITE

(51) International classification	:C04B35/00
(31) Priority Document No	:NA
(32) Priority Date	:NA
(33) Name of priority country	:NA
(86) International Application No	:NA
Filing Date	:NA
(87) International Publication No	: NA
(61) Patent of Addition to Application Number	:NA
Filing Date	:NA
(62) Divisional to Application Number	:NA
Filing Date	:NA

(71)**Name of Applicant :**
1)DIRECTOR GENERAL, DEFENCE RESEARCH & DEVELOPMENT ORGANISATION
Address of Applicant :Ministry of Defence, Govt. of India, Room No 348, B-Wing, DRDO Bhawan, Rajaji Marg, New Delhi 110001 Delhi India
(72)**Name of Inventor :**
1)KUMAR, Suresh
2)GUPTA, Rakesh Kumar
3)MISHRA, Raghwesh
4)MISRA, Manoj Kumar
5)RANJAN, Ashok
6)SAXENA, Arvind Kumar

(57) Abstract :
The present disclosure provides a process for preparation of uni-directionally aligned fiber reinforced carbon-silicon carbide (C-SiC) composite. The fiber reinforced carbon-silicon carbide (C-SiC) composite is formed by a process that includes (a) impregnating a fibrous preform with a resin solution to obtain a resin coated fibrous preform, (b) curing and pyrolysis of the resin coated fibrous preform to obtain a carbon coated fibrous preform, (c) impregnating the carbon coated fibrous preform with a polycarbosilane resin to obtain a polycarbosilane coated preform, (d) curing the polycarbosilane coated preform to obtain a dimensionally stable preform, (e) pyrolyzing the dimensionally stable preform to obtain a carbon-silicon carbide (C/SiC) composite. The composite is further densified with polycarbosilane by repeating the above steps (c) to (e) for one or more times to obtain uni-directionally aligned continuous fiber reinforced carbon-silicon carbide (C-SiC) composite of density in the range of 1.9-2.0g/cc with a bending strength up to 450 MPa. The product of the above process possesses multifunctional properties for use in various high performance applications.

No. of Pages : 21 No. of Claims : 13

(12) PATENT APPLICATION PUBLICATION
(19) INDIA
(22) Date of filing of Application :02/03/2012
(21) Application No.1920/DELNP/2012 A
(43) Publication Date : 24/07/2015

(54) Title of the invention : ANTI-GITR ANTIBODIES

(51) International classification :C07K 16/28
(31) Priority Document No :61/239,667
(32) Priority Date :03/09/2009
(33) Name of priority country :U.S.A.
(86) International Application No :PCT/US2010/047248
Filing Date :31/08/2010
(87) International Publication No :WO 2011/028683
(61) Patent of Addition to Application Number :NA
Filing Date :NA
(62) Divisional to Application Number :NA
Filing Date :NA

(71)**Name of Applicant :**
1)SCHERING CORPORATION
Address of Applicant :2000 GALLOPING HILL ROAD, KENILWORTH, NEW JERSEY 07033 U.S.A.
(72)**Name of Inventor :**
1)SCHEBYE, XIAO MIN
2)ERMAKOV, GRIGORY, P.
3)HODGES, DOUGLAS, J.
4)PRESTA, LEONARD, G.

(57) Abstract :
Antibodies to human GITR are provided, as well as uses thereof, e.g., in treatment of proliferative and immune disorders.

No. of Pages : 130 No. of Claims : 22

(12) PATENT APPLICATION PUBLICATION
(21) Application No.1993/DELNP/2012 A
(19) INDIA
(22) Date of filing of Application :06/03/2012
(43) Publication Date : 24/07/2015

(54) Title of the invention : BODY IMPLANTABLE FABRIC AND A METHOD OF IMPLANTING A FABRIC TO REPAIR A PELVIC FLOOR

(51) International classification :A61F 2/00
(31) Priority Document No :PA 2009 70135
(32) Priority Date :30/09/2009
(33) Name of priority country :Denmark
(86) International Application No :PCT/DK2010/050248
Filing Date :30/09/2010
(87) International Publication No :WO 2011/038740
(61) Patent of Addition to Application Number :NA
Filing Date :NA
(62) Divisional to Application Number :NA
Filing Date :NA

(71)**Name of Applicant :**
1)COLOPLAST A/S
Address of Applicant :HOLTEDAM 1, DK-3050 HUMLEBAEK, DENMARK
(72)**Name of Inventor :**
1)SARAH J. DEITCH

(57) Abstract :
An implantable fabric includes a bio-inert portion having a first surface and an opposing second surface, with each of the first and second surfaces configured for tissue ingrowth and a bio-absorbable portion attached to the bio-inert portion in a manner that substantially prevents wrinkles on each of the first and second surfaces of the bio-inert portion. And amethod of implanting a fabric into a body to repair a pelvic floor includes preventing wrinkle formation in the fabric with a bio- absorbable support, and implanting the bio-absorbable support and the fabric into the body.

No. of Pages : 27 No. of Claims : 36

(12) PATENT APPLICATION PUBLICATION
(19) INDIA
(22) Date of filing of Application :06/03/2012
(21) Application No.1994/DELNP/2012 A
(43) Publication Date : 24/07/2015

(54) Title of the invention : PENILE PROSTHESIS, PENILE PROSTHESIS INSERTION TOOL AND SYSTEM THEREOF

(51) International classification :A61F 2/26
(31) Priority Document No :PA 2009 70120
(32) Priority Date :22/09/2009
(33) Name of priority country :Denmark
(86) International Application No :PCT/DK2010/050243
Filing Date :22/09/2010
(87) International Publication No :WO 2011/035787
(61) Patent of Addition to Application Number :NA
Filing Date :NA
(62) Divisional to Application Number :NA
Filing Date :NA

(71)**Name of Applicant :**
1)COLOPLAST A/S
Address of Applicant :HOLTEDAM 1, DE-3050 HUMLEBAEK, DENMARK
(72)**Name of Inventor :**
1)RANDY L. MORNINGSTAR
2)EGON TRIEL

(57) Abstract :
An implantable penile prosthesis system includes a penile prosthesis (26,28) and an insertion tool (24). The penile prosthesis includes a cylinder extending between a distal tip and a proximal tip. At least one of the distal tip and the proximal tip has a pocket accessible by an opening, where the pocket is formed to extend laterally beyond a perimeter of the opening. The insertion tool extends between a distal end and a proximal end and includes an expansion mechanism coupled to the distal end. The opening in the tip(s) is sized to receive the distal end of the insertion tool and the expansion mechanism is configured to expand into the pocket to couple the insertion tool with the penile prosthesis. And a method of implanting a penile prosthesis into a patient includes inserting a distal end of an insertion tool into an opening formed in a tip of the penile prosthesis, expanding a mechanism from the distal end of the insertion tool into a pocket formed in the tip of the penile prosthesis, and inserting the penile prosthesis into a corpora cavernosum of the patient with the insertion tool.

No. of Pages : 37 No. of Claims : 46

(12) PATENT APPLICATION PUBLICATION
(19) INDIA
(22) Date of filing of Application :03/03/2012
(21) Application No.1932/DELNP/2012 A
(43) Publication Date : 24/07/2015

(54) Title of the invention : IDENTIFYING VIRAL CELL TROPISM

(51) International classification :C12S
(31) Priority Document No :0956045
(32) Priority Date :04/09/2009
(33) Name of priority country :France
(86) International Application No :PCT/FR2010/051817
Filing Date :01/09/2010
(87) International Publication No : NA
(61) Patent of Addition to Application Number :NA
Filing Date :NA
(62) Divisional to Application Number :NA
Filing Date :NA

(71)**Name of Applicant :**
1)UNIVERSITE MONTPELLIER 2 SCIENCES ET TECHNIQUES
Address of Applicant :PLACE EUGENE BATAILLON 34095 MONTPELLIER CEDEX 05 FRANCE
2)UNIVERSITE PARIS-DIDEROT-PARIS 7
(72)**Name of Inventor :**
1)LECELLIER Charles-Henri
2)COURGNAUD Valrie
3)BOUTTIER Manuella
4)DESCAMPS Diane
5)COLLIN Gilles

(57) Abstract :
The invention relates to an in vitro method for identifying microRNAs or the target mRNAs thereof, the expression of which during the infection of cells by a virus using a cell receptor and at least one cell co-receptor for entering the cell, is specifically modified on the basis of the cell co-receptor used by the virus for its entering the cells, comprising: i) determining the microRNA expression levels in a test cell expressing a receptor, a first co-receptor and at least one other co-receptor, after infection by a first virus using the first co-receptor and by at least one other virus using another co-receptor, respectively; ii) identifying the microRNAs, the expression level of which is modulated during the infection by each of the viruses in relation to the expression level in the uninfected cells; iii) comparing the thus-identified microRNAs; iv) selecting the microRNAs, the modification of the expression level of which is specific to the use of a co-receptor; v) optionally identifying the target mRNAs of the thus-selected microRNAs.

No. of Pages : 103 No. of Claims : 16

(12) PATENT APPLICATION PUBLICATION
(19) INDIA
(22) Date of filing of Application :06/03/2012
(21) Application No.2007/DELNP/2012 A
(43) Publication Date : 24/07/2015

(54) Title of the invention : FUEL INJECTOR

(51) International classification :F02M 63/00
(31) Priority Document No :10 2009 046 563.4
(32) Priority Date :10/11/2009
(33) Name of priority country :Germany
(86) International Application No :PCT/EP2010/064655
Filing Date :01/10/2010
(87) International Publication No :WO 2011/057864
(61) Patent of Addition to Application Number :NA
Filing Date :NA
(62) Divisional to Application Number :NA
Filing Date :NA

(71)**Name of Applicant :**
1)ROBERT BOSCH GMBH
Address of Applicant :POSTFACH 30 02 20, 70442 STUTTGART, GERMANY
(72)**Name of Inventor :**
1)BISENMENGER, NADJA

(57) Abstract :
Described herein is a fuel injector (1) comprising a control valve (19) for hydraulically connecting a control chamber (13) operationally connected to one or multi-part injection valve element (9) with a low pressure region (8), wherein the control valve (19) comprises a valve element (18), which is axially adjustable by an actuator and interacts with a valve seat (20) in the closed position, to which an axial guide (24) for guiding the valve element (18) in the axial adjustment movement is allocated. In an embodiment, a center point (M) of an imaginary circle (26) is arranged within the axial guide length of the guide (24), and the circle contacts the valve seat (20) or the sealing region (31) of the valve element (18) interacting with the valve seat (20) at points, in a longitudinal section plane of the fuel injector (1).

No. of Pages : 17 No. of Claims : 9

(12) PATENT APPLICATION PUBLICATION
(19) INDIA
(22) Date of filing of Application :06/03/2012
(21) Application No.2008/DELNP/2012 A
(43) Publication Date : 24/07/2015

(54) Title of the invention : CANCER STEM CELL-TARGETED AND DRUG RESISTANT CANCER THERAPY

(51) International classification :A61K 31/285
(31) Priority Document No :61/241,180
(32) Priority Date :10/09/2009
(33) Name of priority country :U.S.A.
(86) International Application No :PCT/US2010/048308
Filing Date :09/09/2010
(87) International Publication No :WO 2011/031890
(61) Patent of Addition to Application Number :NA
Filing Date :NA
(62) Divisional to Application Number :NA
Filing Date :NA

(71)**Name of Applicant :**
1)KOMINOX, INC
Address of Applicant :1 CAYMAN FINANCIAL CENTRE, 36A DR. ROY'S DRIVE, GEORGE TOWN, GRAND CAYMAN KY1-1104 CAYMAN ISLANDS U.S.A.
(72)**Name of Inventor :**
1)BURGER, ANGELIKA

(57) Abstract :
The present invention provides methods for preventing, treating, and/or managing cancer, the method comprising administering to a subject in need thereof therapeutically effective amount of sodium meta arsenite that reduces or eliminates drug resistant cancer stem cell populations as well as drug resistant mature cancer cells.

No. of Pages : 49 No. of Claims : 13

(12) PATENT APPLICATION PUBLICATION
(19) INDIA
(22) Date of filing of Application :06/03/2012
(21) Application No.2009/DELNP/2012 A
(43) Publication Date : 24/07/2015

(54) Title of the invention : VEHICLE SEAT

(51) International classification :B60N 2/18
(31) Priority Document No :2009-207850
(32) Priority Date :09/09/2009
(33) Name of priority country :Japan
(86) International Application No :PCT/JP2009/071219
Filing Date :21/12/2009
(87) International Publication No :WO 2011/030473
(61) Patent of Addition to Application Number :NA
Filing Date :NA
(62) Divisional to Application Number :NA
Filing Date :NA

(71)**Name of Applicant :**
1)TOYOTA SHATAI KABUSHIKI KAISHA
Address of Applicant :100, KANAYAMA, ICHIRIYAMA-CHO, KARIYA-SHI, AICHI 4480002 (JP) Japan
(72)**Name of Inventor :**
1)HIBI KAZUHIRO

(57) Abstract :
It is an object of the present invention to provide a vehicle seat that is constructed to tilt a seat main body such that a front side thereof can be raised, in which a seating position of the seat main body can be lowered. The present invention provides a vehicle seat that is constructed to tilt a seat main body (40) such that a front side thereof can be raised, which may include a seat main body support portion (36) that supports the seat main body (40), a connection mechanism (50) that connects the seat main body (40) to the seat main body support portion (36), so as to tilt the seat main body (40) on the seat main body support portion (36) such that a front side thereof can be raised, and a drive mechanism (60) that is disposed between a protruded end portion (61) of the seat main body support portion (36) protruded horizontally with respect to the seat main body (40) and an outer surface of the seat main body (40) and is constructed to change a vertical distance between the protruded end portion (61) of the seat main body support portion (36) and the outer surface of the seat main body (40), so as to tilt the seat main body (40) such that the front side thereof can be raised.

No. of Pages : 21 No. of Claims : 2

(12) PATENT APPLICATION PUBLICATION
(19) INDIA
(22) Date of filing of Application :02/03/2012
(21) Application No.1929/DELNP/2012 A
(43) Publication Date : 24/07/2015

(54) Title of the invention : PROCESS FOR THE PREPARATION OF VALGANCICLOVIR HYDROCHLORIDE

(51) International classification :C07D 473/30
(31) Priority Document No :NA
(32) Priority Date :NA
(33) Name of priority country :NA
(86) International Application No :PCT/IB2010/053657
Filing Date :12/08/2010
(87) International Publication No :WO 2011/018771
(61) Patent of Addition to Application Number :NA
Filing Date :NA
(62) Divisional to Application Number :NA
Filing Date :NA

(71)**Name of Applicant :**
1)RANBAXY LABORATORIES LIMITED
Address of Applicant :12TH FLOOR, DEVIKA TOWER, 6, NEHRU PLACE, NEW DELHI-110019, INDIA.
(72)**Name of Inventor :**
1)MOHAMMED SALMAN HASHMI
2)MUKESH KUMAR SHARMA
3)CHANDRA HAS KHANDURI

(57) Abstract :
The present invention provides a novel process for the preparation of pure Valganciclovir hydrochloride.

No. of Pages : 16 No. of Claims : 14

(12) PATENT APPLICATION PUBLICATION
(21) Application No.1998/DELNP/2012 A
(19) INDIA
(22) Date of filing of Application :06/03/2012
(43) Publication Date : 24/07/2015

(54) Title of the invention : STEEPING LIQUOR USED AS MEANS OF CONTROLLING THE RISK OF FIRE AND EXPLOSION OF ORGANIC EXTRACTIVE MATERIALS

(51) International classification :C09K 21/14
(31) Priority Document No :0903919
(32) Priority Date :11/08/2009
(33) Name of priority country :France
(86) International Application No :PCT/FR2011/000563
Filing Date :03/08/2010
(87) International Publication No :WO 2011/018561
(61) Patent of Addition to Application Number :NA
Filing Date :NA
(62) Divisional to Application Number :NA
Filing Date :NA

(71)**Name of Applicant :**
1)IEC EUROPE S.A.R.L.
Address of Applicant :44, RUE DE LA VALLEE L-2661 LUXEMBOURG
(72)**Name of Inventor :**
1)DENIS TERRAZ

(57) Abstract :
The invention refers to the use of a concentrated steeping liquor, called corn steep, from the starch industry as a means to fighting the risks of fire caused by self-heating and the risks of dust explosions induced by the particles and microparticles contained in flammable organic materials from the extractive industry as well as the explosive gases released during the self-heating process, during their storage, transport and/or handling. The concentrated steeping liquor, according to the invention, is diluted in water and mixed with the material to be treated in respective proportions adapted to allow obtaining, for a P index undersize particles to 315 µm, .from an undersized powder rate at most equal to 6%.

No. of Pages : 14 No. of Claims : 7

(12) PATENT APPLICATION PUBLICATION
(19) INDIA
(22) Date of filing of Application :06/03/2012
(21) Application No.1999/DELNP/2012 A
(43) Publication Date : 24/07/2015

(54) Title of the invention : SECURE KVM SWITCH

(51) International classification :G06F 21/00
(31) Priority Document No :0915754.6
(32) Priority Date :09/09/2009
(33) Name of priority country :U.K.
(86) International Application No :PCT/GB2010/051450
Filing Date :02/09/2010
(87) International Publication No :WO 2011/030126
(61) Patent of Addition to Application Number :NA
Filing Date :NA
(62) Divisional to Application Number :NA
Filing Date :NA

(71)**Name of Applicant :**
1)BAE SYSTEMS PLC
Address of Applicant :6 CARLTON GARDENS, LONDON SW1Y 5AD, UNITED KINGDOM
(72)**Name of Inventor :**
1)RICHARD PATRICK TODD BEACHAM

(57) Abstract :
A secure switch assembly for controlling first and second computers using a common keyboard and a common mouse is provided. The switch assembly comprises a secure controller together with first and second switching elements. The secure controller comprises receiving means, configured to receive a selection signal from a user, determining means configured to determine whether the selection signal represents a single, coherent selection and transmitting means configured to emit first and second enabling signals. The first switching element is associated with a first computer and is configured to receive a signal indicative of a mouse instruction from a mouse, a signal indicative of a keyboard instruction from a keyboard and a first enabling signal from the secure controller. The second switching element is also associated with the first computer and is configured to receive a signal indicative of a mouse instruction from the first switching element, a signal indicative of a keyboard instruction from the first switching element and a second enabling signal from the secure controller. The first-and-second switching elements are configured to enable transmission of the mouse and keyboard-instructions therethrough if both the first and second enabling signals are respectively received. The first and second computers are effectively isolated by the first and second switching elements and thereby effect assurance to a high grade.

No. of Pages : 16 No. of Claims : 14

(12) PATENT APPLICATION PUBLICATION
(21) Application No.2069/DELNP/2005 A
(19) INDIA
(22) Date of filing of Application :13/05/2005
(43) Publication Date : 24/07/2015

(54) Title of the invention : DISPOSABLE ABSORBENT ARTICLES HAVING MULTIPLE ABSORBENT CORE COMPONENTS INCLUDING REPLACEABLE COMPONENTS

(51) International classification	:A61F13/15, A61F13/42
(31) Priority Document No	:10/308430
(32) Priority Date	:03/12/2003
(33) Name of priority country	:U.S.A.
(86) International Application No	:NA
Filing Date	:NA
(87) International Publication No	:PCT/US2003/037857
(61) Patent of Addition to Application Number	:NA
Filing Date	:NA
(62) Divisional to Application Number	:NA
Filing Date	:NA

(71)**Name of Applicant :**
1)THE PROCTER & GAMBLE COMPANY
Address of Applicant :ONE PROCTER & GAMBLE PLAZA CINCINNATI, OH 45202 (US) U.S.A.
(72)**Name of Inventor :**
1)LAVON GARY DEAN
2)BECK THEODORA
3)YOUNG GERALD ALFRED
4)HARDIE STEPHEN LEBEUF
5)HENRICH THOMAS
6)KLINE MARK JAMES
7)MILBRADA EDWARD JOHN

(57) Abstract :
A disposable absorbent article adapted to be worn about a lower torso of a human body and having a chassis, a non-removable absorbent core component disposed in a crotch region of the chassis, and a replaceable absorbent core component disposed in capillary liquid communication with the non-removable absorbent core component. The replaceable absorbent core component may be removed and a like component may be substituted in place of the removed component without the removal of the absorbent article from the wearer. The replaceable absorbent core component may be disposed inside an openable chassis pocket, with access for its removal and replacement provided by an aperture in a backsheet, an openable end of an external pocket, or an openable end of an internal pocket formed at an area of a waist end edge where the backsheet and a topsheet may be separated. Additional replaceable absorbent core components may also be incorporated.

No. of Pages : 141 No. of Claims : 20

(12) PATENT APPLICATION PUBLICATION
(21) Application No.1887/DELNP/2012 A
(19) INDIA
(22) Date of filing of Application :02/03/2012
(43) Publication Date : 24/07/2015

(54) Title of the invention : AUTOMATED PROCESSES FOR THE PRODUCTION OF POLYURETHANE WIND TURBINE BLADES

(51) International classification :B29C 70/16
(31) Priority Document No :61/239,885
(32) Priority Date :04/09/2009
(33) Name of priority country :U.S.A.
(86) International Application No :PCT/US2010/002388
Filing Date :01/09/2010
(87) International Publication No :WO 2011/028271
(61) Patent of Addition to Application Number :NA
Filing Date :NA
(62) Divisional to Application Number :NA
Filing Date :NA

(71)**Name of Applicant :**
1)BAYER MATERIALSCIENCE LLC
Address of Applicant :100 BAYER ROAD, PITTSBURGH, PA 15205-9741 U.S.A.
(72)**Name of Inventor :**
1)ROBERT A PYLES
2)JOEL MATSCO

(57) Abstract :
The present invention provides processes for the production of polyurethane wind turbine blades and other large objects. The inventive process involves forming a mold for the polyurethane wind turbine blade at a wind farm site, injecting an isocyanate and an isocyanate-reactive component with an automated reaction injection molding (RIM) machine into the mold, closing, pressing and heating the mold to cure the resulting polyurethane and installing the polyurethane blade in the wind turbine. Alternatively, the process involves forming a mold for polyurethane wind turbine blade at a wind farm site, injecting an isocyanate, an isocyanate-reactive component and long fibers with an automated long fiber injection (LFI) machine, closing, pressing and heating the mold to cure the resulting polyurethane and installing the polyurethane blade in the wind turbine. Because the inventive manufacturing process occurs at the wind farm site, transportation problems are obviated.

No. of Pages : 24 No. of Claims : 12

(12) PATENT APPLICATION PUBLICATION
(19) INDIA
(22) Date of filing of Application :02/03/2012
(21) Application No.1888/DELNP/2012 A
(43) Publication Date : 24/07/2015

(54) Title of the invention : DISPLAY METHOD AND DISPLAY APPARATUS

(51) International classification :H04N 7/173
(31) Priority Document No :2009-210987
(32) Priority Date :11/09/2009
(33) Name of priority country :Japan
(86) International Application No :PCT/JP2010/064481
Filing Date :26/08/2010
(87) International Publication No :WO 2011/030674
(61) Patent of Addition to Application Number :NA
Filing Date :NA
(62) Divisional to Application Number :NA
Filing Date :NA

(71)**Name of Applicant :**
1)SONY CORPORATION
Address of Applicant :1-7-1, KONAN, MINATO-KU, TOKYO, 108-0075, JAPAN
(72)**Name of Inventor :**
1)EIJIRO MORI
2)YUSUKE SAKAI
3)KENICHI OKADA
4)HARUO OBA
5)SHINGO TSURUMI
6)YUICHI IIDA
7)SHINICHI HAYASHI
8)ASAKO TADENUMA
9)JUNICHI TSUKAMOTO

(57) Abstract :
To provide a display method capable of displaying the original power saving effect if a monitoring display of the power saving effect is not made when the monitoring display of the power saving effect is made. Provided is a display method including capturing an image in front of an image display surface included in a display apparatus that displays the image and detecting presence of a moving body positioned in front of the image display surface, deciding a power saving amount of the display apparatus including the power saving amount of the image display surface by using an analysis result of the presence or absence of a human face and a detection result of the moving body in the captured image, and deriving and displaying the actual power saving amount when no display is made on the image display surface on the image display surface when information about the power saving amount is displayed on the image display surface. Accordingly, when a monitoring display of a power saving effect is made, an original power saving effect if no monitoring display of the power saving effect is made can be displayed.

No. of Pages : 37 No. of Claims : 12

(12) PATENT APPLICATION PUBLICATION
(19) INDIA
(22) Date of filing of Application :02/03/2012
(21) Application No.1889/DELNP/2012 A
(43) Publication Date : 24/07/2015

(54) Title of the invention : DISPLAY APPARATUS AND CONTROL METHOD

(51) International classification :C09G 5/36
(31) Priority Document No :2009-210988
(32) Priority Date :11/09/2009
(33) Name of priority country :Japan
(86) International Application No :PCT/JP2010/062310
Filing Date :22/07/2010
(87) International Publication No :WO 2011/030624
(61) Patent of Addition to Application Number :NA
Filing Date :NA
(62) Divisional to Application Number :NA
Filing Date :NA

(71)**Name of Applicant :**
1)SONY CORPORATION
Address of Applicant :1-7-1 KONAN, MINATO-KU, TOKYO, 108-0075, JAPAN
(72)**Name of Inventor :**
1)HARUO OBA
2)YUSUKE SAKAI
3)EIJIRO MORI
4)KENICHI OKADA
5)KATSUNORI TANAKA
6)SHINICHI HAYASHI
7)TOMOHIKO GOTOH
8)SHINGO TSURUMI
9)ASAKO TADENUMA

(57) Abstract :
A novel and improved display apparatus and a control method capable of preventing its user from viewing an image in an improper viewing position are provided. Provided is a display apparatus including: an imaging unit that captures a moving image in a predetermined range with respect to an image display direction; an image analyzer that analyzes the moving image captured by the imaging unit, and calculates a position of a target that should be guided to a proper viewing position; and a display controller that causes a display unit to perform display in order to guide the target to the proper viewing position when the target position calculated by the image analyzer is at an improper viewing position.

No. of Pages : 39 No. of Claims : 8

(12) PATENT APPLICATION PUBLICATION
(19) INDIA
(22) Date of filing of Application :13/09/2010
(21) Application No.2164/DEL/2010 A
(43) Publication Date : 24/07/2015

(54) Title of the invention : AN IMPROVED PROCESS FOR THE SYNTHESIS OF BETA AMINO ACID DERIVATIVES

(51) International classification	:C07D243/24, C07D243/14
(31) Priority Document No	:NA
(32) Priority Date	:NA
(33) Name of priority country	:NA
(86) International Application No	:NA
Filing Date	:NA
(87) International Publication No	:NA
(61) Patent of Addition to Application Number	:NA
Filing Date	:NA
(62) Divisional to Application Number	:NA
Filing Date	:NA

(71)**Name of Applicant :**
1)PANACEA BIOTEC LIMITED
Address of Applicant :B-1, EXTN./A-27, MOHAN CO-OPERATIVE, INDUSTRIAL ESTATE, MATHURA ROAD, NEW DELHI-110044 India
(72)**Name of Inventor :**
1)JAIN, RAJESH
2)RAO, JAGADEESHWAR R
3)RAO, SIRIPRAGADA MAHENDER

(57) Abstract :
The present invention is related to an improved process and intermediate(s) for the synthesis of beta amino acid derivatives of formula I. The compounds of formula I act as DPP-IV inhibitors and are useful in the treatment of Type 2 diabetes.

No. of Pages : 70 No. of Claims : 19

(12) PATENT APPLICATION PUBLICATION
(19) INDIA
(22) Date of filing of Application :02/03/2012
(21) Application No.1930/DELNP/2012 A
(43) Publication Date : 24/07/2015

(54) Title of the invention : COLLAPSIBLE VEHICLE

(51) International classification :B23B
(31) Priority Document No :200333
(32) Priority Date :05/08/2009
(33) Name of priority country :Netherlands
(86) International Application No :PCT/NL2010/050494
Filing Date :04/08/2010
(87) International Publication No : NA
(61) Patent of Addition to Application Number :NA
Filing Date :NA
(62) Divisional to Application Number :NA
Filing Date :NA

(71)**Name of Applicant :**
1)AndereggHolding BV
Address of Applicant :Reamurstraat 36 NL-1097 RH Amsterdam Netherlands
(72)**Name of Inventor :**
1)Paul GOKKEL

(57) Abstract :
The present invention relates to a vehicle with a collapsible body. With this construction a one-persons vehicle can be folded together to a very compact size with the dimensions of an average suitcase. The body comprises two halves: a front and back part. Each of these parts contains a lower and upper hollow section. Each upper hollow section can slide telescopically in and out the lower hollow section thus enlarging or reducing the length of the corresponding part. In the collapsed state both parts with all their sections are nested into each other. A further reduction of the volume of the collapsed vehicle can be achieved by using a chassis with two retractable slidable frame parts.

No. of Pages : 22 No. of Claims : 18

(12) PATENT APPLICATION PUBLICATION
(21) Application No.1931/DELNP/2012 A
(19) INDIA
(22) Date of filing of Application :02/03/2012
(43) Publication Date : 24/07/2015

(54) Title of the invention : METHOD AND MACHINE FOR THE CONTINUOUS MANUFACTURE OF PACKAGES MADE FROM FLEXIBLE MATERIAL AND RESULTING PACKAGE

(51) International classification :B60S
(31) Priority Document No :P 200901722
(32) Priority Date :04/08/2009
(33) Name of priority country :Spain
(86) International Application No :PCT/ES2010/070452
Filing Date :01/07/2010
(87) International Publication No : NA
(61) Patent of Addition to Application Number :NA
Filing Date :NA
(62) Divisional to Application Number :NA
Filing Date :NA

(71)**Name of Applicant :**
1)VOLPAK S.A.U.
Address of Applicant :4 calle Can Vinyalets (Pol. Ind. Can Vinyalets) 08130 SANTA PERPETUA DE MOGODA Spain
(72)**Name of Inventor :**
1)FONT LLETCHE Jordi

(57) Abstract :
The invention relates to a method for continuously manufacturing containers made of a flexible material from a single continuous laminar band or from several continuous laminar bands which will be longitudinally attached to form a single continuous laminar band which will subsequently be transversely cut. In both cases in a stage of the production phase a single laminar band folded over itself along longitudinal fold lines is obtained the cross-section of which open or closed according to the embodiment variant forms a planar figure in which there is distinguished the upper base of the container which in a variant of the method comprises a portion of band previously provided with holes and corresponding spouts collapsed on one side said single laminar band being susceptible of being driven by means of two drive rollers.

No. of Pages : 37 No. of Claims : 15

(12) PATENT APPLICATION PUBLICATION
(19) INDIA
(22) Date of filing of Application :06/03/2012
(21) Application No.2000/DELNP/2012 A
(43) Publication Date : 24/07/2015

(54) Title of the invention : PROCESS FOR PREPARING BIPHENYL IMIDAZOLE COMPOUNDS

(51) International classification :C07D 233/68
(31) Priority Document No :61/246,608
(32) Priority Date :29/09/2009
(33) Name of priority country :U.S.A.
(86) International Application No :PCT/US2010/050481
Filing Date :28/09/2010
(87) International Publication No :WO 2011/041284
(61) Patent of Addition to Application Number :NA
Filing Date :NA
(62) Divisional to Application Number :NA
Filing Date :NA

(71)**Name of Applicant :**
1)THERAVANCE, INC
Address of Applicant :901 GATEWAY BOULEVARD, SOUTH SAN FRANCISCO, CALIFORNIA 94080, U.S.A.
(72)**Name of Inventor :**
1)WEIJIANG ZHANG
2)PIERRE-JEAN COLSON
3)TIMOTHY FASS

(57) Abstract :
The invention provides processes for preparing intermediates useful for preparing compounds of the formula: or a salt thereof, where R1-3 are as defined in the specification.

No. of Pages : 46 No. of Claims : 29

(12) PATENT APPLICATION PUBLICATION
(21) Application No.2001/DELNP/2012 A
(19) INDIA
(22) Date of filing of Application :06/03/2012
(43) Publication Date : 24/07/2015

(54) Title of the invention : FREQUENCY DIVISION DUPLEXING AND HALF DUPLEX FREQUENCY DIVISION DUPLEXING IN MULTIPHOP RELAY NETWORKS

(51) International classification :H04B 7/15
(31) Priority Document No :61/239,514
(32) Priority Date :03/09/2009
(33) Name of priority country :U.S.A.
(86) International Application No :PCT/CA2010/001351
Filing Date :03/09/2010
(87) International Publication No :WO 2011/026224
(61) Patent of Addition to Application Number :NA
Filing Date :NA
(62) Divisional to Application Number :NA
Filing Date :NA

(71)**Name of Applicant :**
1)ROCKSTAR BIDCO, LP
Address of Applicant :1285 AVENUE OF THE AMERICAS, NEW YORK, NEW YORK 10019-6064, USA
(72)**Name of Inventor :**
1)ISRAFIL BAHCECI
2)NIMAL SENARATH
3)HANG ZHANG
4)PEIYING ZHU
5)DERKE YU
6)WEN TONG

(57) Abstract :
A device is provided having a local oscillator (LO) configured to generate a first signal having timing information, frequency information, phase information or combinations thereof. The device also includes a prioritizer comprising at least two inputs, each input configured to receive a respective second signal having timing information, frequency information, phase information or combinations thereof. The prioritizer is configured to determine an accuracy of at least one second signal of the at least two second signals in relation to a second signal assigned to be a most accurate of the at least two second signals. The prioritizer is also configured to order the at least two second signals from most accurate to least accurate. The LO is disciplined to correct an offset error of the LO relative to a most accurate second signal that is available to the device, based on the order of the at least two second signals.

No. of Pages : 53 No. of Claims : 18

(12) PATENT APPLICATION PUBLICATION
(19) INDIA
(22) Date of filing of Application :10/01/2012
(21) Application No.258/DELNP/2012 A
(43) Publication Date : 24/07/2015

(54) Title of the invention : ORAL CARE COMPOSITIONS WHICH COMPRISE STANNOUS AND POTASSIUM

(51) International classification :A61K 8/19
(31) Priority Document No :09166510.9
(32) Priority Date :27/07/2009
(33) Name of priority country :EUROPEAN UNION
(86) International Application No :PCT/US2010/042437
Filing Date :19/07/2010
(87) International Publication No :WO 2011/016983
(61) Patent of Addition to Application Number :NA
Filing Date :NA
(62) Divisional to Application Number :NA
Filing Date :NA

(71)**Name of Applicant :**
1)THE PROCTER & GAMBLE COMPANY
Address of Applicant :ONE PROCTER & GAMBLE PLAZA, CINCINNATI, OHIO 45202, USA
(72)**Name of Inventor :**
1)ROSS STRAND

(57) Abstract :
The present invention relates to a single phase oral care composition comprising: a. a stannous salt delivering a stannous ion; b. a potassium salt delivering a potassium ion; c. a chelant; d. a fluoride ion source; e. less than 0.01% of an alkyl sulphate or an alkyl ethoxylate sulphate; and f. a surfactant selected from a cationic, an amphoteric surfactant, a nonionic surfactant or mixtures thereof; wherein the oral care composition provides a soluble fluoride ion level of greater than 50% of the total fluoride ion. The composition of the invention has been found to allow prolonged contact between stannous ion and nitrate ion in a single dentifrice without toxic effects or insoluble products. The invention further provides for the maintenance of an efficacious fluoride ion level.

No. of Pages : 18 No. of Claims : 16

(12) PATENT APPLICATION PUBLICATION
(19) INDIA
(22) Date of filing of Application :02/03/2012
(21) Application No.1908/DELNP/2012 A
(43) Publication Date : 24/07/2015

(54) Title of the invention : POWER SUPPLY START-UP MECHANISM, APPARATUS, AND METHOD FOR CONTROLLING ACTIVATION OF POWER SUPPLY CIRCUITS

(51) International classification :G06F 1/26
(31) Priority Document No :09171083.0
(32) Priority Date :23/09/2009
(33) Name of priority country :EPO
(86) International Application No :PCT/EP2010/064084
Filing Date :23/09/2010
(87) International Publication No :WO 2011/036227
(61) Patent of Addition to Application Number :NA
Filing Date :NA
(62) Divisional to Application Number :NA
Filing Date :NA

(71)**Name of Applicant :**
1)ST-ERICSSON SA
Address of Applicant :CHEMIN DU CHAMP-DES-FILLES 39, CH-1228 PLAN-LES-OUATES (CH) Switzerland
(72)**Name of Inventor :**
1)KALL, EMIL

(57) Abstract :
A power supply start-up sequencing mechanism for controlling activation of a plurality of power supply circuits with a predetermined timing is disclosed. The mechanism comprises a time value generator arranged to provide a time value signal; and for each of the power supply circuits, a logic circuit arranged to receive the time value signal and from the received signal provide an activation signal to the respective power supply circuit, wherein the respective logic circuit is associated with a start timing value for the respective power supply circuit such that the activation signal is provided when the associated start timing value coincides with the received time value signal. An apparatus comprising such a mechanism, and a method for controlling activation of a plurality of power supply circuits are also disclosed.

No. of Pages : 13 No. of Claims : 13

(12) PATENT APPLICATION PUBLICATION
(19) INDIA
(22) Date of filing of Application :02/03/2012
(21) Application No.1909/DELNP/2012 A
(43) Publication Date : 24/07/2015

(54) Title of the invention : PROCESS FOR PREPARING PREGABALIN

(51) International classification :C07C 227/04
(31) Priority Document No :1614/DEL/2009
(32) Priority Date :03/08/2009
(33) Name of priority country :India
(86) International Application No :PCT/IN2010/000510
Filing Date :02/08/2010
(87) International Publication No :WO 2011/016052
(61) Patent of Addition to Application Number :NA
Filing Date :NA
(62) Divisional to Application Number :NA
Filing Date :NA

(71)**Name of Applicant :**
1)HELVETICA INDUSTRIES (P) LIMITED
Address of Applicant :A-1, COMMUNITY CENTER, NARAINA INDUSTRIAL AREA, PHASE-II, NEW DELHI - 110 028 India
(72)**Name of Inventor :**
1)PRADHAN, B.S.

(57) Abstract :
The invention relates to a process for preparing a compound of formula (I): wherein said process comprises hydrogenation of a compound of formula (II): under alkaline conditions, wherein R represents hydrogen or a labile group capable of being converted to hydrogen. The invention also relates to intermediates used in said process, to the use of said intermediates in the preparation of pregabalin and to a process for resolving racemic compounds of formula (I).

No. of Pages : 26 No. of Claims : 14

(12) PATENT APPLICATION PUBLICATION
(21) Application No.198/DEL/2014 A
(19) INDIA
(22) Date of filing of Application :22/01/2014
(43) Publication Date : 24/07/2015

(54) Title of the invention : A SYSTEM AND METHOD FOR ASSESSING AND IMPROVING THE EXAM SKILLS

(51) International classification	:G09B7/00	(71)**Name of Applicant :**
(31) Priority Document No	:NA	**1)GOYAL JAI**
(32) Priority Date	:NA	Address of Applicant :55, PRITHIVIRAJ NAGAR,
(33) Name of priority country	:NA	MAHARANI FARM, DURGAPURA, JAIPUR, 302018
(86) International Application No	:NA	Rajasthan India
Filing Date	:NA	(72)**Name of Inventor :**
(87) International Publication No	: NA	**1)GOYAL JAI**
(61) Patent of Addition to Application Number	:NA	
Filing Date	:NA	
(62) Divisional to Application Number	:NA	
Filing Date	:NA	

(57) Abstract :
A method and system for assessing and improving the exam skills of one or more individual users via Unstructured Supplementary Service Data (USSD) channel is provided. The question data set (QDS) is shared with one or more individual users for a defined period of time. The response of QDS is received from one or more individual users -within the defined , period of time via USSD channel. The received QDS response is evaluated based on the exam skill parameters, wherein the exam skill parameters include speed, accuracy, silly mistake immunity (SMI) and question quality assessment (QQA).The independent pH index scores are generated for one or more individual users based on the exam skill parameter values and the marks obtained in the QDS response during said evaluation. The level of one or more individual users is determined based on the pH Index scores. The recommendations message is provided to one or more individual users based on the level score.

No. of Pages : 46 No. of Claims : 20

(12) PATENT APPLICATION PUBLICATION
(19) INDIA
(22) Date of filing of Application :02/04/2012
(21) Application No.2790/DELNP/2012 A
(43) Publication Date : 24/07/2015

(54) Title of the invention : A PROCESS FOR PRODUCING HYDROCARBONS

(51) International classification :B01J 21/04
(31) Priority Document No :11/114,804
(32) Priority Date :26/04/2005
(33) Name of priority country :U.S.A.
(86) International Application No :PCT/US06/011021
Filing Date :27/03/2006
(87) International Publication No :WO 2006/115668
(61) Patent of Addition to Application Number :NA
Filing Date :NA
(62) Divisional to Application Number :7013/DELNP/2007
Filed on :11/09/2007

(71)**Name of Applicant :**
1)SUD-CHEMIE INC.,
Address of Applicant :1600 WEST HILL STREET, LOUISVILLE, KENTUCKY 40210 USA
(72)**Name of Inventor :**
1)RAFAEL L. ESPINOZA,
2)KANDASWAMY JOTHIMURUGESAN,
3)YAMING JIN,
4)DALE J. ORTEGO, JR.,
5)KRISTI A. FJARE,
6)BEATRICE C. ORTEGO,

(57) Abstract :
The present invention relates to a process for producing hydrocarbons employing catalyst particles supported on a stabilized catalyst support with an enhanced hydrothermal stability, comprising: reacting a feed gas comprising carbon monoxide and hydrogen under conversion promoting conditions in the presence of a supported catalyst comprising a stabilized support so as to produce a hydrocarbon product, wherein the catalyst is prepared by a method comprising: preparing a stabilized catalyst support by a method comprising providing a crystalline hydrous alumina precursor comprising at least one crystalline boehmite or at least one crystalline bayerite having an average crystallite size selected from a desired optimum range; contacting the crystalline hydrous alumina precursor with at least one structural stabilizer or a compound thereof to generate a contacted alumina precursor; shaping either the crystalline hydrous alumina precursor before or after the contacting step to form particles of a desired average particle size; and subjecting the contacted alumina precursor in the presence of the at least one structural stabilizer or compound thereof to at least one heat treatment employing a temperature of about 450 °C or higher, in such a manner that said prepared stabilized catalyst support has an enhanced hydrothermal stability; applying a catalytic metal or a compound thereof to said stabilized catalyst support to form a catalyst precursor, wherein the catalytic metal is selected from the group consisting of cobalt, ruthenium, nickel, iron, and combinations thereof; and calcining at a temperature of at least about 200 °C.

No. of Pages : 89 No. of Claims : 9

(12) PATENT APPLICATION PUBLICATION
(19) INDIA
(22) Date of filing of Application :02/04/2012
(21) Application No.2792/DELNP/2012 A
(43) Publication Date : 24/07/2015

(54) Title of the invention : BARRIER TRANSACTION IN INTERCONNECTS

(51) International classification :G06F 13/16
(31) Priority Document No :0917946.6
(32) Priority Date :13/10/2009
(33) Name of priority country :U.K.
(86) International Application No :PCT/GB2010/001822
Filing Date :28/09/2010
(87) International Publication No :WO 2011/045556
(61) Patent of Addition to Application Number :NA
Filing Date :NA
(62) Divisional to Application Number :NA
Filing Date :NA

(71)**Name of Applicant :**
1)ARM LIMITED
Address of Applicant :110 FULBOURN ROAD, CHERRY HINTON, CAMBRIDGE CB1 9NJ, GREAT BRITAIN U.K.
(72)**Name of Inventor :**
1)PETER, ANDREW RIOCREUX
2)BRUCE, JAMES MATHEWSON
3)CHRISTOPHER, WILLIAM LAYCOCK
4)RICHARD, ROY GRISENTHWAITE

(57) Abstract :
Interconnect circuitry for a data processing apparatus is disclosed. The interconnect circuitry is configured to provide data routes via which at least one initiator device may access at least one recipient device, said interconnect circuitry comprising: at least one input for receiving transaction requests from said at least one initiator device; at least one output for out-putting transaction requests to said at least one recipient device; at least one path for transmitting said transaction requests be¬tween said at least one input and said at least one output; control circuitry for routing said received transaction requests from said at least one input to said at least one output; wherein said control circuitry is configured to respond to a barrier transaction request to maintain an ordering of at least some transaction requests with respect to said barrier transaction request within a stream of transaction requests passing along one of said at least one paths, by not allowing reordering of at least some transactions requests that occur before said barrier transaction request in said stream of transaction requests with respect to at least some transaction requests that occur after said barrier transaction request in said stream of transaction requests; wherein said barrier transaction request comprising an indicator indicating which of said transaction requests within said stream of transaction requests comprise said at least some transaction requests whose ordering is to be maintained.

No. of Pages : 72 No. of Claims : 29

(12) PATENT APPLICATION PUBLICATION
(19) INDIA
(22) Date of filing of Application :02/04/2012
(21) Application No.2793/DELNP/2012 A
(43) Publication Date : 24/07/2015

(54) Title of the invention : 2-OXO-1-PYRROLIDINYL IMIDAZOTHIADIAZOLE DERIVATIVES

(51) International classification :C07D 513/04
(31) Priority Document No :09173912.8
(32) Priority Date :23/10/2009
(33) Name of priority country :EPO
(86) International Application No :PCT/EP2010/006434
Filing Date :21/10/2010
(87) International Publication No :WO 2011/047860
(61) Patent of Addition to Application Number :NA
Filing Date :NA
(62) Divisional to Application Number :NA
Filing Date :NA

(71)**Name of Applicant :**
1)UCB PHARMA S.A.
Address of Applicant :INTELLECTUAL PROPERTY DEPARTMENT, 60 ALLEE DE LA RECHERCHE, B-1070 BRUSSELS, BELGIUM
(72)**Name of Inventor :**
1)YANNICK QUESNEL
2)LAURENT TURET
3)JOEL MERCIER

(57) Abstract :
The present invention relates to 2-oxo-1-pyrrolidine imidazothiadiazole derivatives, processes for preparing them, pharmaceutical compositions containing them and their use as pharmaceuticals.

No. of Pages : 53 No. of Claims : 9

(12) PATENT APPLICATION PUBLICATION
(21) Application No.2794/DELNP/2012 A
(19) INDIA
(22) Date of filing of Application :02/04/2012
(43) Publication Date : 24/07/2015

(54) Title of the invention : SYSTEM AND METHOD FOR MEASURING INJECTION PROCESSES IN A COMBUSTION ENGINE

(51) International classification :F02D 41/22
(31) Priority Document No :10 2009 043 718.5
(32) Priority Date :01/10/2009
(33) Name of priority country :Germany
(86) International Application No :PCT/EP2010/064626
Filing Date :01/10/2010
(87) International Publication No :WO 2011/039343
(61) Patent of Addition to Application Number :NA
Filing Date :NA
(62) Divisional to Application Number :NA
Filing Date :NA

(71)**Name of Applicant :**
1)AVL LIST GMBH
Address of Applicant :HANS-LIST-PLATZ 1, A-8020 GRAZ, AUSTRIA
(72)**Name of Inventor :**
1)HERIBERT KAMMERSTETTER

(57) Abstract :
System and method for measuring injection processes in a combustion engine Precise measurements of fuel systems in terms of cycle and time while the engine is running have previously not been known or are subject to serious errors. According to the invention, a processor (26), which is connected to a device (22) disposed in a fuel line (4) for measuring temporally resolved volumetric flow processes and to the pressure sensor (14) via data transmission lines (24), is used to precisely calculate injection volumes while the engine is running. The calculation is carried out by transmitting measured values of the pressure sensor (14) on the storage container (12) and measured values of the device (22) for measuring temporally resolved volumetric flow processes in the fuel line (4) to the processor (26) using the means for capturing the actuating times to deter¬mine the actuating data, and by calculating the course of the injection of the injection valves (18) in the processor (26) by superposition of the storage contain¬er flows calculated based on the measured pressure curves of the pressure sensor (14) on the storage container (12) with the measured values of the device (22) for measuring temporally resolved volumetric flow processes in the fuel line (4).

No. of Pages : 14 No. of Claims : 10

(12) PATENT APPLICATION PUBLICATION
(21) Application No.143/DEL/2014 A
(19) INDIA
(22) Date of filing of Application :17/01/2014
(43) Publication Date : 24/07/2015

(54) Title of the invention : CLASS-BASED CARRIER RESELECTION

(51) International classification :H04J
(31) Priority Document No :NA
(32) Priority Date :NA
(33) Name of priority country :NA
(86) International Application No :NA
Filing Date :NA
(87) International Publication No : NA
(61) Patent of Addition to Application Number :NA
Filing Date :NA
(62) Divisional to Application Number :NA
Filing Date :NA

(71)**Name of Applicant :**
1)ALCATEL LUCENT
Address of Applicant :3, avenue Octave Grard 75007 Paris, France
(72)**Name of Inventor :**
1)KANUGOVI, Satish
2)ROSSETTI, David

(57) Abstract :
Method for reselecting a carrier in a wireless communication system is described. The method includes receiving, at a user equipment (UE) (106), system information from a serving carrier. The system information includes a plurality of class-based reselection parameters for the serving carrier and at least one neighboring carrier. The plurality of class-based reselection parameters control carrier reselection based on a class assigned to the UE (106), and the class is assigned to the UE (106) based on service parameters subscribed by the UE (106). Upon receiving the system information, the UE (106) measures signal characteristics of signals received from the serving carrier and the at least one neighboring carrier. The measured signal characteristics are then compared with a plurality of class-based reselection parameter corresponding to the class assigned to the UE (106). Based on comparison, a carrier reselection from the serving carrier to the at least one neighboring carrier is performed.

No. of Pages : 34 No. of Claims : 20

(12) PATENT APPLICATION PUBLICATION
(21) Application No.169/DEL/2014 A
(19) INDIA
(22) Date of filing of Application :21/01/2014
(43) Publication Date : 24/07/2015

(54) Title of the invention : FORTIFICATION OF STEVIA LEAVES ALONG WITH MORINGA LEAVES TO ENHANCE THE MEDICINAL VALUE OF THE PRODUCTS.

(51) International classification :A61K36/00
(31) Priority Document No :NA
(32) Priority Date :NA
(33) Name of priority country :NA
(86) International Application No :NA
Filing Date :NA
(87) International Publication No : NA
(61) Patent of Addition to Application Number :NA
Filing Date :NA
(62) Divisional to Application Number :NA
Filing Date :NA

(71)**Name of Applicant :**
1)DR. SEEMA SONKAR
Address of Applicant :104/18 SISAMAU KANPUR - 208012, UP, INDIA
2)PREETI TIWARI
(72)**Name of Inventor :**
1)DR. SEEMA SONKAR
2)PREETI TIWARI

(57) Abstract :
Stevia biscuit and Moringa biscuit product along with procedure of product development is innovative; still it is not developed by any other. Awareness about the medicinal and nutritional value of Stevia and Moringa leaves is required to developed and introduce at large scale. Biscuit were developed with Stevia and Moringa leaves introduced to the people, and these products are highly nutritious along with their medicinal value, it is tasty and digestible which is helpful in joint pain and reducing the blood sugar level for the diabetic person.

No. of Pages : 8 No. of Claims : 1

(12) PATENT APPLICATION PUBLICATION
(19) INDIA
(22) Date of filing of Application :02/03/2012
(21) Application No.1904/DELNP/2012 A
(43) Publication Date : 24/07/2015

(54) Title of the invention : MOTOR DRIVE CONTROL

(51) International classification :H02M 7/5387
(31) Priority Document No :0213098.7
(32) Priority Date :07/06/2002
(33) Name of priority country :U.K.
(86) International Application No :PCT/GB03/02466
Filing Date :05/06/2003
(87) International Publication No :WO 03/105329
(61) Patent of Addition to Application Number :NA
Filing Date :NA
(62) Divisional to Application Number :3916/DELNP/2004
Filed on :10/12/2004

(71)**Name of Applicant :**
1)TRW LIMITED
Address of Applicant :STRATFORD ROAD, SOLIHULL, WEST MIDLANDS B90 4AX, GREAT BRITAIN U.K.
2)TRW AUTOMOTIVE US LLC
(72)**Name of Inventor :**
1)WILLIAMS, CONNEL, BRETT
2)COLES, JEFFREY, RONALD
3)SZABO, ADRIAN
4)LI, JIANG
5)FARDOUN, ABBAS, AHMAD
6)DIXON, CHRISTOPHER, DAVID

(57) Abstract :
A drive system for a three phase brushless AC motor is arranged to optimise the transistor switching pattern to improve power output whilst allowing current measurement in all of the phases using a single sensor. This is achieved by defining voltage demand vectors x where more than two states are required to meet a minimum state time requirement determined by the single sensor method, and calculating three or more state vectors which produce the demanded vector x whilst still allowing single current sensing. Various methods of optimising the PWM pattern so as to give maximum output whilst using single current sensing are also disclosed.

No. of Pages : 53 No. of Claims : 10

(12) PATENT APPLICATION PUBLICATION
(19) INDIA
(22) Date of filing of Application :02/03/2012
(21) Application No.1905/DELNP/2012 A
(43) Publication Date : 24/07/2015

(54) Title of the invention : CRYSTALLINE SALTS OF METHYL 2-((R)-(3-CHLORO PHENYL)((R)-L-((S)-2-(METHYLAMINO)-3((R)-TETRAHYDRO-2H-PYRAN-3-YL) PROPYLCARBAMOYL)

(51) International classification :C07D 405/12
(31) Priority Document No :61/231,860
(32) Priority Date :06/08/2009
(33) Name of priority country :U.S.A.
(86) International Application No :PCT/US2010/044568
Filing Date :05/08/2010
(87) International Publication No :WO 2011/017533
(61) Patent of Addition to Application Number :NA
Filing Date :NA
(62) Divisional to Application Number :NA
Filing Date :NA

(71)**Name of Applicant :**
1)VITAE PHARMACEUTICALS, INC.
Address of Applicant :502 WEST OFFICE CENTER DRIVE, FORT WASHINGTON, PA 19034, U.S.A.
(72)**Name of Inventor :**
1)CLAREMON, DAVID, A.
2)SIMPSON, ROBERT, D.
3)JIA, LANQI

(57) Abstract :
Mucic acid salts of a compound represented by the following structural formula:(I) are disclosed. In particular, single crystalline mucic acid salts of the compound represented by structural formula (I) are characterized by a variety of properties and physical measurements. Methods of producing the mucic acid salts, using the salts to antagonize one or more aspartic proteases, and methods of treating a number of aspartic protease mediated disorders using the salts are described herein.

No. of Pages : 61 No. of Claims : 48

(12) PATENT APPLICATION PUBLICATION
(19) INDIA
(22) Date of filing of Application :02/04/2012
(21) Application No.2801/DELNP/2012 A
(43) Publication Date : 24/07/2015

(54) Title of the invention : DISPENSING DEVICE

(51) International classification :B65D 51/28
(31) Priority Document No :0915541.7
(32) Priority Date :07/09/2009
(33) Name of priority country :U.K.
(86) International Application No :PCT/GB2010/051482
Filing Date :07/09/2010
(87) International Publication No :WO 2011/027177
(61) Patent of Addition to Application Number :NA
Filing Date :NA
(62) Divisional to Application Number :NA
Filing Date :NA

(71)**Name of Applicant :**
1)MIXICAP LIMITED
Address of Applicant :EURO HOUSE, TEAM VALLEY, GATESHEAD TYNE & WEAR NE11 0RQ, UNITED KINGDOM
(72)**Name of Inventor :**
1)AMRIK PANNU

(57) Abstract :
A dispensing device comprises a cap (1) attachable to a container, the device being configured to dispense a liquid ingredient into the container, the device including at least one plunger (13) and at least one cylinder. The plunger arranged to slide in respective cylinder, is substantially hollow having a closed end (15) and an open end (17), the open end (17) having a peripheral edge, and the peripheral edge being adapted such that the surface tension of the liquid in the region of the open end (17) is disrupted.

No. of Pages : 23 No. of Claims : 36

(12) PATENT APPLICATION PUBLICATION
(19) INDIA
(22) Date of filing of Application :02/03/2012
(21) Application No.1910/DELNP/2012 A
(43) Publication Date : 24/07/2015

(54) Title of the invention : METHOD FOR THE DIAGNOSIS AND/OR PROGNOSIS OF ACUTE RENAL DAMAGE

(51) International classification :C12Q 1/68
(31) Priority Document No :P 200901825
(32) Priority Date :04/09/2009
(33) Name of priority country :Spain
(86) International Application No :PCT/ES2010/070579
Filing Date :03/09/2010
(87) International Publication No :WO 2011/027019
(61) Patent of Addition to Application Number :NA
Filing Date :NA
(62) Divisional to Application Number :NA
Filing Date :NA

(71)**Name of Applicant :**
1)FUNDACION PARA LA INVESTIGACION BIOMEDICA DEL HOSPITAL UNIVERSITARIO RAMON Y CAJAL
Address of Applicant :CTRA. DE COLMENAR VIEJO, KM. 9,100, E-28034 MADRID, Spain
(72)**Name of Inventor :**
1)GARCIA BERMEJO MARIA LAURA
2)AGUADO FRAILE ELIA
3)LIANO GARCIA FERNANDO
4)SAENZ MORALES DAVID

(57) Abstract :
The invention relates to a method for the diagnosis and/or prognosis of acute renal damage by analysing the level of expression of at least one microRNA selected from miR-127, miR-126, miR-210 and miR-101.

No. of Pages : 33 No. of Claims : 12

(12) PATENT APPLICATION PUBLICATION
(19) INDIA
(22) Date of filing of Application :02/03/2012
(21) Application No.1911/DELNP/2012 A
(43) Publication Date : 24/07/2015

(54) Title of the invention : METHODS FOR TREATMENT OF A SARCOMA USING AN EPIMETABOLIC SHIFTER (COENZYMEQ10)

(51) International classification :A61K 31/122
(31) Priority Document No :61/236,845
(32) Priority Date :25/08/2009
(33) Name of priority country :U.S.A.
(86) International Application No :PCT/US2010/046711
Filing Date :25/08/2010
(87) International Publication No :WO 2011/031503
(61) Patent of Addition to Application Number :NA
Filing Date :NA
(62) Divisional to Application Number :NA
Filing Date :NA

(71)**Name of Applicant :**
1)CYTOTECH LABS, LLC
Address of Applicant :1845 ELM HILL PIKE, NASHVILLE, TN 37210, USA
(72)**Name of Inventor :**
1)SARANGARAJAN RANGAPRASAD
2)NARAIN NIVEN RAJIN
3)MCCOOK JOHN PATRICK

(57) Abstract :
Methods and formulations for treating a sarcoma in humans using an epimetabolic shifter, such as Coenzyme Q10, a building block of CoQ10, a derivative of CoQ10, an analog of CoQ10, a metabolite of CoQ10, or an intermediate of the coenzyme biosynthesis pathway, are described. Methods for assessing the efficacy of treatment of, diagnosing, and prognosing sarcoma are also provided.

No. of Pages : 200 No. of Claims : 54

(12) PATENT APPLICATION PUBLICATION
(21) Application No.1981/DELNP/2012 A
(19) INDIA
(22) Date of filing of Application :06/03/2012
(43) Publication Date : 24/07/2015

(54) Title of the invention : HUMANIZED ANTIBODIES SPECIFIC FOR AMINO ACID SEQUENCE RGD OF AN EXTRACELLULAR MATRIX PROTEIN AND THE USES THEREOF

(51) International classification	:C12N 15/09
(31) Priority Document No	:61/272,438
(32) Priority Date	:24/09/2009
(33) Name of priority country	:U.S.A.
(86) International Application No	:PCT/JP2010/067017
Filing Date	:22/09/2010
(87) International Publication No	:WO 2011/037271
(61) Patent of Addition to Application Number	:NA
Filing Date	:NA
(62) Divisional to Application Number	:NA
Filing Date	:NA

(71)**Name of Applicant :**
1)GENE TECHNO SCIENCE CO., LTD.
Address of Applicant :1, KITA-2JO-NISHI 9-CHOME, CHUO-KU, SAPPORO-SHI, HOKKAIDO 060-0002, JAPAN
(72)**Name of Inventor :**
1)KUMAR, SHANKAR
2)TSO, J. YUN
3)TSURUSHITA, NAOYA

(57) Abstract :
The present invention provides humanized antibodies that immunospecifically recognize the RGD sequence. Some of these antibodies inhibit the biological functions of the RGD proteins, thereby exhibiting therapeutic effects on various disorders or diseases that are associated with RGD proteins, including cancer, e.g., the growth and metastasis of a cancer cell, and inflammatory diseases, e.g., rheumatoid arthritis, osteoarthritis, hepatitis, endometriosis, bronchial asthma, fibrosis, diabetes, arteriosclerosis, multiple sclerosis, granuloma, an inflammatory bowel disease (ulcerative colitis and Crohn's disease), an autoimmune disease, and so forth.

No. of Pages : 137 No. of Claims : 23

(12) PATENT APPLICATION PUBLICATION
(19) INDIA
(22) Date of filing of Application :06/03/2012
(21) Application No.1982/DELNP/2012 A
(43) Publication Date : 24/07/2015

(54) Title of the invention : 'CONDUCTIVITY CONTROL OF INK COMPOSITION

(51) International classification :C09D 11/00
(31) Priority Document No :61/236,206
(32) Priority Date :24/08/2009
(33) Name of priority country :U.S.A.
(86) International Application No :PCT/US2010/046456
Filing Date :24/08/2010
(87) International Publication No :WO 2011/025773
(61) Patent of Addition to Application Number :NA
Filing Date :NA
(62) Divisional to Application Number :NA
Filing Date :NA

(71)**Name of Applicant :**
1)SUN CHEMICAL CORPORATION
Address of Applicant :35 WATERVIEW BOULEVARD, PARSIPPANY, NEW JERSEY 07054, U.S.A.
(72)**Name of Inventor :**
1)RICHARD M. JONES
2)YUEMEI ZHANG

(57) Abstract :
Systems and methods to control the print-ability of an ink comprising water are presented In exem¬plary embodiments of the present invention, monitoring the conductivity of the ink via a conductivity measure¬ment device yields a signal which, for example, decreases strongly and linearly as water is removed from the ink In exemplary embodiments of the present invention a lower limit on this signal can be set to control the turning on of a pump, and/or the opening of a valve to allow flow of a makeup fluid into the ink In exemplary embodiments of the present invention the makeup fluid can, for example, be comprised of water, a caustic substance, and an in¬hibitor Such a make-up fluid can restore the lost compo¬nent(s) and correct for damage due to ink heating on press Similarly, in exemplary embodiments of the present in¬vention, an upper limit on the conductivity signal can also be set to turn off the pump and/or close the valve, so as to prevent over-addition of the makeup fluid and avoid ink dilution and/or insoluble phase formation

No. of Pages : 34 No. of Claims : 54

(12) PATENT APPLICATION PUBLICATION
(19) INDIA
(22) Date of filing of Application :06/03/2012
(21) Application No.1983/DELNP/2012 A
(43) Publication Date : 24/07/2015

(54) Title of the invention : 5,6-BICYCLIC HETEROARYL-CONTAINING UREA COMPOUNDS AS KINASE INHIBITORS

(51) International classification :C07D 471/04
(31) Priority Document No :61/236,274
(32) Priority Date :24/08/2009
(33) Name of priority country :U.S.A.
(86) International Application No :PCT/CN2010/076199
Filing Date :20/08/2010
(87) International Publication No :WO 2011/023081
(61) Patent of Addition to Application Number :NA
Filing Date :NA
(62) Divisional to Application Number :NA
Filing Date :NA

(71)**Name of Applicant :**
1)ASCEPION PHARMACEUTICALS, INC.
Address of Applicant :BIOBAY, BUILDING A3, SUITE 102, 218 XINGHU STREET, SUZHOU INDUSTRIAL PARK, JIANGSU 215123, CHINA
(72)**Name of Inventor :**
1)SHAN JIANG
2)XINGLONG XING
3)QISHAN WANG
4)REN KONG

(57) Abstract :
The present invention provides 5,6-bicyclic heteroaryl-containing urea compounds of Formula I or II and use of the same for treating conditions mediated by protein kinase such as VEGFR2, c-Met, PDGFRP c-Kit, CSF1R, or EphA2.

No. of Pages : 107 No. of Claims : 36

(12) PATENT APPLICATION PUBLICATION
(19) INDIA
(22) Date of filing of Application :02/04/2012
(21) Application No.2804/DELNP/2012 A
(43) Publication Date : 24/07/2015

(54) Title of the invention : TREATING WATER INSOLUBLE NANOPARTICLES WITH HYDROPHILIC ALPHA-HYDROXYPHOSPHONIC ACID CONJUGATES, THE SO MODIFIED NANOPARTICLES AND THEIR USE AS CONTRAST AGENTS

(51) International classification :A61K 49/18
(31) Priority Document No :12/609,799
(32) Priority Date :30/10/2009
(33) Name of priority country :U.S.A.
(86) International Application No :PCT/EP2010/066429
Filing Date :29/10/2010
(87) International Publication No :WO 2011/051422
(61) Patent of Addition to Application Number :NA
Filing Date :NA
(62) Divisional to Application Number :NA
Filing Date :NA

(71)**Name of Applicant :**
1)GENERAL ELECTRIC COMPANY
Address of Applicant :1 RIVER ROAD, SCHENECTADY, NEW YORK 12345, U.S.A.
(72)**Name of Inventor :**
1)BRIAN C. BALES
2)BRUCE ALAN HAY
3)BINIL ITTY IPE KANDAPALLIL

(57) Abstract :
A composition comprising: a water insoluble nanoparticle to which is adhered at least one alpha-hydroxy phosphonate moiety having the formula: wherein S is a spacer, L is a linkage between S and R and R is a polymeric hydrophilic moiety and m and p are 1-5 and n and o are 0-5.

No. of Pages : 31 No. of Claims : 15

(12) PATENT APPLICATION PUBLICATION
(21) Application No.1926/DELNP/2012 A
(19) INDIA
(22) Date of filing of Application :02/03/2012
(43) Publication Date : 24/07/2015

(54) Title of the invention : METHOD FOR OPERATING A FORCED-FLOW STEAM GENERATOR OPERATING AT A STEAM TEMPERATURE ABOVE 650 C AND FORCED-FLOW STEAM GENERATOR

(51) International classification :F02C
(31) Priority Document No :102009036064.6
(32) Priority Date :04/08/2009
(33) Name of priority country :Germany
(86) International Application No :PCT/DE2010/000906
Filing Date :30/07/2010
(87) International Publication No :WO 2011/015185
(61) Patent of Addition to Application Number :NA
Filing Date :NA
(62) Divisional to Application Number :NA
Filing Date :NA

(71)**Name of Applicant :**
1)ALSTOM TECHNOLOGY LTD
Address of Applicant :BROWN BOVERI STRASSE 7, 5400 BADEN, SWITZERLAND
(72)**Name of Inventor :**
1)BERNDT THORALF
2)CHEN, QIURONG

(57) Abstract :
The invention relates to a method for opera¬ting a forced-flow steam generator operating at variable pressure and at a steam temperature above 650°C and redu¬cing the minimum forced-flow load of the forced-flow steam generator, wherein the forced-flow steam generator is incorporated in the water-/steam-conducting working medium circuit of a power plant and the economizer of the forced-flow steam generator comprises at least one high-pressure pre-heater and/or a heat transfer system for pre¬heating the working medium, the at least one high-pressure pre-heater and/or the heat transfer system being arranged upstream as viewed in the working medium circuit directi¬on, wherein if a predetermined partial load point (LT) is exceeded, the heat absorption of the working medium wi¬thin at least one high-pressure pre-heater and/or the heat transfer system is reduced in such a way that the tempera¬ture of the water/steam working medium at the outlet of the economizer is below the boiling point relative to the corre¬sponding economizer outlet by a predetermined tempera¬ture difference (TD), and a forced-flow steam generator for performing the method.

No. of Pages : 33 No. of Claims : 19

(12) PATENT APPLICATION PUBLICATION
(21) Application No.1927/DELNP/2012 A
(19) INDIA
(22) Date of filing of Application :02/03/2012
(43) Publication Date : 24/07/2015

(54) Title of the invention : DEVICE FOR REDUCING DIMENSIONS OF AIR BUBBLES IN DIESEL FUEL SUPPLIED TO ENGINES

(51) International classification :F02M 37/32
(31) Priority Document No :RE2009A000087
(32) Priority Date :08/09/2009
(33) Name of priority country :Italy
(86) International Application No :PCT/EP2010/061747
Filing Date :12/08/2010
(87) International Publication No :WO 2011/029689
(61) Patent of Addition to Application Number :NA
Filing Date :NA
(62) Divisional to Application Number :NA
Filing Date :NA

(71)**Name of Applicant :**
1)UFI FILTERS S.P.A
Address of Applicant :26 VIA EUROPA, 1-46047, PORTO MANTOVANO (MANTOVA) ITALY
(72)**Name of Inventor :**
1)GIRONDI, GIORGIO

(57) Abstract :
A filter for diesel fuel having at least an inlet conduit (4) and an outlet conduit (5) of the diesel, and being provided with at least a toroidal filter element (3) inserted on and supported by a cylindrical support element (13), the filter further comprising a device for reducing dimensions of air bubbles present in the diesel fuel, wherein the device comprises at least an air conveyor chamber (10) associated to the cylindrical support element (13), wherein the air conveyor chamber (10) is provided with at least a hole (11) from which the air accumulated in the filter can exit in order to enter, in a form of small bubbles, a flow of the diesel fuel in outlet from the filter, and wherein the air conveyor chamber is defined by a bulge of the cylindrical support element (13), which protrudes towards the inside of the cylindrical support element (13).

No. of Pages : 12 No. of Claims : 6

(12) PATENT APPLICATION PUBLICATION
(21) Application No.1928/DELNP/2012 A
(19) INDIA
(22) Date of filing of Application :02/03/2012
(43) Publication Date : 24/07/2015

(54) Title of the invention : EIGENVALUE DECOMPOSITION AND SINGULAR VALUE DECOMPOSITION OF MATRICES USING JACOBI ROTATION

(51) International classification :G06F 17/16
(31) Priority Document No :PCT/US2005/041783
(32) Priority Date :15/11/2005
(33) Name of priority country :PCT
(86) International Application No :PCT/US2005/041783
Filing Date :15/11/2007
(87) International Publication No :WO 2006/053340
(61) Patent of Addition to Application Number :NA
Filing Date :NA
(62) Divisional to Application Number :3807/DELNP/2007
Filed on :22/05/2007

(71)**Name of Applicant :**
1)QUALCOMM INCORPORATED
Address of Applicant :5775 MOREHOUSE DRIVE, SAND DIEGO, CA 92121-1714, USA
(72)**Name of Inventor :**
1)JOHN W. KETCHUM
2)J.RODNEY WALTON
3)MARK WALLACE
4)STEVEN J HOWARD
5)HAKAN INANOGLU

(57) Abstract :
An apparatus comprising: at least one processor configured to initialize a first matrix to an identity matrix, to initialize a second matrix to a Hermitian matrix of complex values, to perform a plurality of iterations of Jacobi rotation on the second matrix by forming a Jacobi rotation matrix of complex values for each iteration based on the second matrix, and updating the first and second matrices for each iteration based on the Jacobi rotation matrix for the iteration, to provide the first matrix as a matrix of eigenvectors, and to provide the second matrix as a matrix of eigenvalues; and a memory coupled to the at least one processor.

No. of Pages : 41 No. of Claims : 24

(12) PATENT APPLICATION PUBLICATION
(19) INDIA
(22) Date of filing of Application :02/04/2012
(21) Application No.2807/DELNP/2012 A
(43) Publication Date : 24/07/2015

(54) Title of the invention : ARYL-AND HETEROARYLCARBONYL DERIVATIVES OF HEXAHYDROINDENOPYRIDINE AND OCTAHYDROBENZOQUINOLINE

(51) International classification :C07D 221/10
(31) Priority Document No :09175233.7
(32) Priority Date :06/11/2009
(33) Name of priority country :EPO
(86) International Application No :PCT/US2010/055586
Filing Date :05/11/2010
(87) International Publication No :WO 2011/057054
(61) Patent of Addition to Application Number :NA
Filing Date :NA
(62) Divisional to Application Number :NA
Filing Date :NA

(71)**Name of Applicant :**
1)VITAE PHARMACEUTICALS, INC.
Address of Applicant :502 WEST OFFICE CENTER DRIVE, FORT WASHINGTON, PENNSYLVANIA 19034, U.S.A.
2)BOEHRINGER INGELHEIM INTERNATIONAL GMBH
(72)**Name of Inventor :**
1)ECKHARDT, MATTHIAS
2)PETERS, STEFAN
3)NAR, HERBERT
4)HIMMELSBACH, FRANK
5)ZHUANG, LINGHANG

(57) Abstract :
The present invention relates to compounds defined by formula I, wherein the variables R1, R2, R3, R4, and m are defined as in claim 1, possessing valuable pharmacological activity. Particularly, the compounds are inhibitors of 11 -hydroxysteroid dehydrogenase (HSD) 1 and thus are suitable for treatment and prevention of diseases which can be influenced by inhibition of this enzyme, such as metabolic diseases, in particular diabetes type 2, obesity, and dyslipidemia.

No. of Pages : 181 No. of Claims : 16

(12) PATENT APPLICATION PUBLICATION
(19) INDIA
(22) Date of filing of Application :06/03/2012
(21) Application No.1984/DELNP/2012 A
(43) Publication Date : 24/07/2015

(54) Title of the invention : APTAMERS TO TISSUE FACTOR PATHWAY INHIBITORS AND THEIR USE AS BLEEDING DISORDER THERAPEUTICS

(51) International classification :A61K 48/00
(31) Priority Document No :61/234,939
(32) Priority Date :18/08/2009
(33) Name of priority country :U.S.A.
(86) International Application No :PCT/US2010/045797
Filing Date :17/08/2010
(87) International Publication No :WO 2011/022427
(61) Patent of Addition to Application Number :NA
Filing Date :NA
(62) Divisional to Application Number :NA
Filing Date :NA

(71)**Name of Applicant :**
1)BAXTER INTERNATIONAL INC.
Address of Applicant :ONE BAXTER PARKWAY, DEERFIELD, IL 60015, U.S.A.
(72)**Name of Inventor :**
1)ROBERT G. SCHAUB
2)KATHLEEN MCGINNESS
3)JENNIFER NELSON
4)RYAN GENGA
5)EMILY WATERS
6)JEFFREY C. KURZ
7)JOHN L. DIENER

(57) Abstract :
The invention relates gener¬ally to the field of nucleic acids and more particularly to aptamers that bind to TFPI, which are useful as therapeutics in and diag¬nostics of bleeding disorders and/or other diseases or disorders in which TFPI has been implicated. In addition, the TFPI ap¬tamers may be used before, during and/or af¬ter medical procedures to reduce complica¬tions or side effects thereof. The invention further relates to materials and methods for the administration of aptamers that bind to TFPI.

No. of Pages : 457 No. of Claims : 37

(12) PATENT APPLICATION PUBLICATION
(19) INDIA
(22) Date of filing of Application :06/03/2012
(21) Application No.1985/DELNP/2012 A
(43) Publication Date : 24/07/2015

(54) Title of the invention : NITROGEN-CONTAINING COMPOUNDS AND PHARMACEUTICAL COMPOSITIONS THEREOF FOR THE TREATMENT OF ATRIAL FIBRILLATION

(51) International classification :C07D 243/12
(31) Priority Document No :61/235,973
(32) Priority Date :21/08/2009
(33) Name of priority country :U.S.A.
(86) International Application No :PCT/JP2010/064545
Filing Date :20/08/2010
(87) International Publication No :WO 2011/021726
(61) Patent of Addition to Application Number :NA
Filing Date :NA
(62) Divisional to Application Number :NA
Filing Date :NA

(71)**Name of Applicant :**
1)OTSUKA PHARMACEUTICAL CO., LTD.
Address of Applicant :9, KANDA-TSUKASAMACHI 2-CHOME, CHIYODA-KU, TOKYO 1018535, JAPAN
(72)**Name of Inventor :**
1)KUNIO OSHIMA
2)SHUUJI MATSUMURA
3)HOKUTO YAMABE
4)NAOHIRO ISONO
5)NORIAKI TAKEMURA
6)SHINICHI TAIRA
7)TAKASHI OSHIYAMA
8)YASUHIRO MENJO
9)TSUYOSHI NAGASE
10)MASATAKA UEDA
11)YASUO KOGA
12)SUNAO NAKAYAMA
13)KENJI TSUJIMAE
14)TOSHIYUKI ONOGAWA
15)KUNINORI TAI
16)MOTOHIRO ITOTANI

(57) Abstract :
The present invention provides a novel diazepine compound that blocks the Ikw current or the Kv1.5 channel potently and more selectively than other K+ channels. The present invention relates to a diazepine com¬pound represented by General Formula (1) or a salt thereof; wherein R1, R2, R3, and R4 are each independently hydrogen, lower alkyl, cy¬clo lower alkyl or lower alkoxy lower alkyl; R2 and R3 may be linked to form lower alky-lene; A1 is lower alkylene optionally substitut¬ed with one or more substiruents selected from the group consisting of hydroxyl and oxo; Y1 and Y2 are each independently -N= or -CH=; and R5 is group represented by (2) wherein R6 and R7 are each independently hy- ' drogen or organic group; R6 and R7 may be linked to form a ring together with the neigh¬boring group -XA-N-XB-; XA and XB are each independently a bond, lower alkylene, etc.

No. of Pages : 673 No. of Claims : 18

(12) PATENT APPLICATION PUBLICATION
(19) INDIA
(22) Date of filing of Application :06/03/2012
(21) Application No.1986/DELNP/2012 A
(43) Publication Date : 24/07/2015

(54) Title of the invention : DEVICE FOR ELECTRICALLY INTERCONNECTING CELLS IN A BATTERY PACK BY MEANS OF CELL CONNECTORS AND BATTERY PACK WITH SUCH CELL CONNECTORS

(51) International classification :H01M 2/10
(31) Priority Document No :10 2009 043 670.7
(32) Priority Date :01/10/2009
(33) Name of priority country :Germany
(86) International Application No :PCT/EP2010/005956
Filing Date :30/09/2010
(87) International Publication No :WO 2011/038908
(61) Patent of Addition to Application Number :NA
Filing Date :NA
(62) Divisional to Application Number :NA
Filing Date :NA

(71)**Name of Applicant :**
1)DIEHL STIFTUNG & CO. KG
Address of Applicant :STEPHANSTR. 49, 90478 NURNBERG, GERMANY
(72)**Name of Inventor :**
1)HARALD HECK
2)ANDREAS VOLEK
3)RALF HOJDA
4)UWE MARX
5)HARALD WICH
6)ROLF PECHLOFF
7)NA
8)FRANK WARMUTH
9)DIRK HOPSCH
10)JORG SEYBOLD
11)HUBERTUS GOESMANN
12)PHILIPP PETZ
13)AXELLE HAUCK

(57) Abstract :
The present invention provides a novel diazepine compound that blocks the Ikw current or the Kv1.5 channel potently and more selectively than other K+ channels. The present invention relates to a diazepine com¬pound represented by General Formula (1) or a salt thereof; wherein R1, R2, R3, and R4 are each independently hydrogen, lower alkyl, cy¬clo lower alkyl or lower alkoxy lower alkyl; R2 and R3 may be linked to form lower alky-lene; A1 is lower alkylene optionally substitut¬ed with one or more substiruents selected from the group consisting of hydroxyl and oxo; Y1 and Y2 are each independently -N= or -CH=; and R5 is group represented by (2) wherein R6 and R7 are each independently hy- ' drogen or organic group; R6 and R7 may be linked to form a ring together with the neigh¬boring group -XA-N-XB-; XA and XB are each independently a bond, lower alkylene, etc.

No. of Pages : 27 No. of Claims : 20

(12) PATENT APPLICATION PUBLICATION
(19) INDIA
(22) Date of filing of Application :02/04/2012
(21) Application No.2813/DELNP/2012 A
(43) Publication Date : 24/07/2015

(54) Title of the invention : PACKING MATERIAL CONTAINING TUNGSTEN AND INTEGRATED PACKAGE

(51) International classification :H01L 23/28
(31) Priority Document No :10-2009-0082956
(32) Priority Date :03/09/2009
(33) Name of priority country :Republic of Korea
(86) International Application No :PCT/KR2010/005973
Filing Date :03/09/2010
(87) International Publication No :WO 2011/028042
(61) Patent of Addition to Application Number :NA
Filing Date :NA
(62) Divisional to Application Number :NA
Filing Date :NA

(71)**Name of Applicant :**
1)PARK, YOUNG-WOONG
Address of Applicant :RN-TECH CO., LTD. MTW 510-HO 533 YONGSAN-DONG, YUSEONG-GU DAEJEON 305-500 (KR) Republic of Korea
(72)**Name of Inventor :**
1)PARK, YOUNG-WOONG

(57) Abstract :
The present invention relates to a packing material of an integrated package for protecting a semiconductor integrated circuit corresponding to a key component of electronic equipment from nuclear electromagnetic wave radiation. The present invention can implement packing material which protects a semiconductor wafer from the electromagnetic wave radiation (figure 1) by using a tungsten compound as a main component of an epoxy molding compound (EMC), and can improve total performance of the integrated package material such as the closest thermal expansion coefficient to the semiconductor wafer (figure 2), the relatively high thermal conductivity in comparison with the silicon (figure 3) and the like.

No. of Pages : 11 No. of Claims : 3

(12) PATENT APPLICATION PUBLICATION
(19) INDIA
(22) Date of filing of Application :06/03/2012
(21) Application No.2002/DELNP/2012 A
(43) Publication Date : 24/07/2015

(54) Title of the invention : TETRAARYLBORATE PROCESS FOR PRODUCING SUBSTITUTED BIPHENYLS

(51) International classification :C07C 201/12
(31) Priority Document No :09169039.6
(32) Priority Date :31/08/2009
(33) Name of priority country :EUROPEAN UNION
(86) International Application No :PCT/EP2010/005060
Filing Date :18/08/2010
(87) International Publication No :WO 2011/023324
(61) Patent of Addition to Application Number :NA
Filing Date :NA
(62) Divisional to Application Number :NA
Filing Date :NA

(71)**Name of Applicant :**
1)BAYER CROPSCIENCE AG
Address of Applicant :ALFRED-NOBEL-STR. 50, 40789 MONHEIM, GERMANY
(72)**Name of Inventor :**
1)WAHED AHMED MORADI
2)NORBERT LUI
3)MICHAEL DOCKNER
4)THOMAS JAGUSCH

(57) Abstract :
The present invention relates to a process for the preparation of substituted biphenyls by reacting aryl halides with tetraarylborates in the presence of palladium catalysts.

No. of Pages : 27 No. of Claims : 13

(12) PATENT APPLICATION PUBLICATION
(19) INDIA
(22) Date of filing of Application :06/03/2012
(21) Application No.2003/DELNP/2012 A
(43) Publication Date : 24/07/2015

(54) Title of the invention : METHOD AND APPARATUS FOR SUPPORTING LOCATION SERVICES WITH ROAMING

(51) International classification :H04Q 7/38
(31) Priority Document No :61/741,324
(32) Priority Date :30/11/2005
(33) Name of priority country :U.S.A.
(86) International Application No :PCT/US2006/061441
Filing Date :30/11/2006
(87) International Publication No :WO 2007/100401
(61) Patent of Addition to Application Number :NA
Filing Date :NA
(62) Divisional to Application Number :3606/DELNP/2008
Filed on :29/04/2008

(71)**Name of Applicant :**
1)QUALCOMM INCORPORATED
Address of Applicant :INTERNATIONAL IP ADMINISTRATION, 5775 MOREHOUSE DRIVE, SAN DIEGO, CALIFORNIA 92121-1714, U.S.A.
(72)**Name of Inventor :**
1)GAURAV LAMBA
2)KIRK ALLAN BURROUGHS
3)IE-HONG LIN
4)SANJEEV KHUSHU
5)ZHIMIN DU
6)YUFEI WANG

(57) Abstract :
Techniques for supporting location services with roaming are described. A mobile station interacts with a home mobile positioning center (H-MPC) in a home network for location services even when roaming. The mobile station communicates with a visited network for a data session and receives a request for its location. The mobile station sends first information (e.g., SID and NID) indicative of its current network location to the H-MPC. The H-MPC determines a serving mobile positioning center (S-MPC) in the visited network based on the first information. The S-MPC determines a serving position determining entity (S-PDE) in the visited network based on the first information. Depending on the selected positioning method, the H-MPC may receive an S-PDE address or a position estimate of the mobile station from the S-MPC and may forward this information to mobile station. The mobile station may communicate with the S-PDE for positioning using the S-PDE address.

No. of Pages : 58 No. of Claims : 20

(12) PATENT APPLICATION PUBLICATION
(19) INDIA
(22) Date of filing of Application :06/03/2012
(21) Application No.2004/DELNP/2012 A
(43) Publication Date : 24/07/2015

(54) Title of the invention : METHOD AND APPARATUS FOR SUPPORTING LOCATION SERVICES WITH ROAMING

(51) International classification :H04Q 7/38
(31) Priority Document No :61/741,324
(32) Priority Date :30/11/2005
(33) Name of priority country :U.S.A.
(86) International Application No :PCT/US2006/061441
Filing Date :30/11/2006
(87) International Publication No :WO 2007/100401
(61) Patent of Addition to Application Number :NA
Filing Date :NA
(62) Divisional to Application Number :3606/DELNP/2008
Filed on :29/04/2008

(71)**Name of Applicant :**
1)QUALCOMM INCORPORATED
Address of Applicant :INTERNATIONAL IP ADMINISTRATION, 5775 MOREHOUSE DRIVE, SAN DIEGO, CALIFORNIA 92121-1714, U.S.A.
(72)**Name of Inventor :**
1)GAURAV LAMBA
2)KIRK ALLAN BURROUGHS
3)IE-HONG LIN
4)SANJEEV KHUSHU
5)ZHIMIN DU
6)YUFEI WANG

(57) Abstract :
Techniques for supporting location services with roaming are described. A mobile station interacts with a home mobile positioning center (H-MPC) in a home network for location services even when roaming. The mobile station communicates with a visited network for a data session and receives a request for its location. The mobile station sends first information (e.g., SID and NID) indicative of its current network location to the H-MPC. The H-MPC determines a serving mobile positioning center (S-MPC) in the visited network based on the first information. The S-MPC determines a serving position determining entity (S-PDE) in the visited network based on the first information. Depending on the selected positioning method, the H-MPC may receive an S-PDE address or a position estimate of the mobile station from the S-MPC and may forward this information to mobile station. The mobile station may communicate with the S-PDE for positioning using the S-PDE address.

No. of Pages : 61 No. of Claims : 20

(12) PATENT APPLICATION PUBLICATION
(19) INDIA
(22) Date of filing of Application :02/04/2012
(21) Application No.2816/DELNP/2012 A
(43) Publication Date : 24/07/2015

(54) Title of the invention : APOGOSSYPOLONE DERIVATIVES AS ANTICANCER AGENTS

(51) International classification :A61K 31/12
(31) Priority Document No :61/249,982
(32) Priority Date :08/10/2009
(33) Name of priority country :U.S.A.
(86) International Application No :PCT/US2010/051845
Filing Date :07/10/2010
(87) International Publication No :WO 201/04375
(61) Patent of Addition to Application Number :NA
Filing Date :NA
(62) Divisional to Application Number :NA
Filing Date :NA

(71)**Name of Applicant :**
1)SANFORD-BURNHAM MEDICAL RESEARCH INSTITUTE
Address of Applicant :10901 NORTH TORREY PINES ROAD, LA JOLLA, CA 92037, U.S.A.
(72)**Name of Inventor :**
1)PELLECCHIA, MAURIZIO
2)WEI, JUN

(57) Abstract :
The disclosure provides compounds and methods of using Apogossypolone derivatives for treating diseases and disorders. In particular, the disclosure provides compounds of Formula I: or a pharmaceutically acceptable salt, hydrate, or solvate thereof, and provides methods for the preparation of compounds of Formula I; and methods for treating cancer, autoimmune diseases, and inflammation by administering a compound of Formula I.

No. of Pages : 124 No. of Claims : 40

(12) PATENT APPLICATION PUBLICATION
(19) INDIA
(22) Date of filing of Application :02/04/2012
(21) Application No.2817/DELNP/2012 A
(43) Publication Date : 24/07/2015

(54) Title of the invention : LOW ETHER COMPOSITION AND DELIVERY APPARATUS

(51) International classification :A61K 9/70
(31) Priority Document No :61/249,788
(32) Priority Date :08/10/2009
(33) Name of priority country :U.S.A.
(86) International Application No :PCT/US2010/051257
Filing Date :04/10/2010
(87) International Publication No :WO 2011/044008
(61) Patent of Addition to Application Number :NA
Filing Date :NA
(62) Divisional to Application Number :NA
Filing Date :NA

(71)**Name of Applicant :**
1)MSD CONSUMER CARE, INC.
Address of Applicant :3030 JACKSON AVENUE, MEMPHIS, TENNESSEE 38151 U.S.A.
(72)**Name of Inventor :**
1)DEVER, GERALD, R.
2)SU, ERIC CHEN-NAN
3)ROGERS, WILLIAM SCOTT
4)JOHNSON, ROBERT, C.

(57) Abstract :
A low ether gel composition for application to skin comprising a keratolytic agent, in particular salicylic acid, and comprising a nitrocellulose and one or more volatile ingredients, which forms a film on contact with skin adequate to form a protective barrier for the keratolytic agent for a period of time necessary to provide treatment to the skin; methods of treating using such compositions, and dispensers containing such compositions.

No. of Pages : 23 No. of Claims : 34

(12) PATENT APPLICATION PUBLICATION
(21) Application No.107/DEL/2015 A
(19) INDIA
(22) Date of filing of Application :13/01/2015
(43) Publication Date : 24/07/2015

(54) Title of the invention : INFORMATION PROCESSING DEVICE, MOBILE TERMINAL, AND NON-TRANSITORY RECORDING MEDIUM

(51) International classification	:G06F3/00
(31) Priority Document No	:2014-004474
(32) Priority Date	:14/01/2014
(33) Name of priority country	:Japan
(86) International Application No	:NA
Filing Date	:NA
(87) International Publication No	: NA
(61) Patent of Addition to Application Number	:NA
Filing Date	:NA
(62) Divisional to Application Number	:NA
Filing Date	:NA

(71)**Name of Applicant :**
1)TOYOTA JIDOSHA KABUSHIKI KAISHA
Address of Applicant :1, Toyota-cho Toyota-shi, Aichi-ken, 471-8571, JAPAN
(72)**Name of Inventor :**
1)SUZUKI Koichi

(57) Abstract :
An information processing device that receives and processes posting information, as well as position information, from a mobile terminal. The position information includes first position information, which indicates a first position of the mobile terminal when a user enters an information posting intention into the mobile terminal, and second position information which indicates a second position of the mobile terminal when the user enters an information posting instruction into the mobile terminal. The information processing device determines position information to be associated with the posting information, based on at least one of a difference between the first position and the second position and a difference between a first point-in-time at which the mobile terminal is positioned at the first position and a second point-in-time at which the mobile terminal is positioned at the second position.

No. of Pages : 42 No. of Claims : 9

(12) PATENT APPLICATION PUBLICATION
(19) INDIA
(22) Date of filing of Application :06/03/2012
(21) Application No.2005/DELNP/2012 A
(43) Publication Date : 24/07/2015

(54) Title of the invention : USE OF INDOLE DERIVATIVES AS NURR-1 ACTIVATORS FOR THE APPLICATION THEREOF AS A MEDICAMENT FOR THE TREATMENT OF PARKINSON'S DISEASE

(51) International classification :C07D 209/10
(31) Priority Document No :0956259
(32) Priority Date :11/09/2009
(33) Name of priority country :France
(86) International Application No :PCT/FR2010/051884
Filing Date :10/09/2010
(87) International Publication No :WO 2011/030068
(61) Patent of Addition to Application Number :NA
Filing Date :NA
(62) Divisional to Application Number :NA
Filing Date :NA

(71)**Name of Applicant :**
1)LABORATOIRES FOURNIER SA
Address of Applicant :28 BOULEVARD CLEMENCEAU, F-21000 DIJON, FRANCE
(72)**Name of Inventor :**
1)JEROME AMAUDRUT
2)BENAISSA BOUBIA
3)MARIA JOHANNA PETRONELLA VAN DONGEN
4)FABRICE GUILLIER
5)OLIVIA POUPARDIN-OLIVIERE

(57) Abstract :
The present invention relates to a compound derived from indole, notably useful in therapeutics, characterized in that it is selected from i) the compounds of formula: ii) the pharmaceutically acceptable salts of said compounds of formula (I); R1, R2, R3, R4, R5, R6, R8, R9 and Cy being as defined in Claim 1. Application: The invention finds application in the pharmaceutical field for the treatment of neurodegenerative diseases and in particular Parkinson's disease.

No. of Pages : 180 No. of Claims : 18

(12) PATENT APPLICATION PUBLICATION
(19) INDIA
(22) Date of filing of Application :06/03/2012
(21) Application No.2006/DELNP/2012 A
(43) Publication Date : 24/07/2015

(54) Title of the invention : HIGH CURRENT CONTACT AND CORRESPONDING METHOD FOR PRODUCING A HIGH CURRENT CONTACT ASSEMBLY

(51) International classification :H01R 4/28
(31) Priority Document No :10 2009 047 763.2
(32) Priority Date :10/12/2009
(33) Name of priority country :Germany
(86) International Application No :PCT/EP2010/068095
Filing Date :24/11/2010
(87) International Publication No :WO 2011/069823
(61) Patent of Addition to Application Number :NA
Filing Date :NA
(62) Divisional to Application Number :NA
Filing Date :NA

(71)**Name of Applicant :**
1)ROBERT BOSCH GMBH
Address of Applicant :POSTFACH 30 02 20, 70442 STUTTGART, GERMANY
(72)**Name of Inventor :**
1)HAU, WOLFGANG
2)SILBERBAUER, ACHIM
3)HUEHNER, STEFAN
4)DILLMANN, ADOLF

(57) Abstract :
Described herein is a high current contact (1) comprising a contact pin (10), which has at least one contact opening (15), and a contact terminal (20), which has at least one contact limb (24), wherein at least one contact limb (24) of the contact terminal (20) is connected to a corresponding contact opening (15) of the contact pin (10) on at least one joint region (14) to produce an electrical contact and to receive mechanical forces. In an embodiment, manufacturing of the electrical contact between the contact pin (10) and the contact terminal (20) is largely isolated from the receiving of mechanical forces, wherein the electrical contact between the contact pin (10) and the contact terminal (20) is produced by a first connection type (7) and the mechanical forces are received by a second connection type (5).

No. of Pages : 19 No. of Claims : 10

(12) PATENT APPLICATION PUBLICATION
(19) INDIA
(22) Date of filing of Application :02/04/2012
(21) Application No.2823/DELNP/2012 A
(43) Publication Date : 24/07/2015

(54) Title of the invention : POWER GENERATION APPARATUS

(51) International classification :H02J 7/14
(31) Priority Document No :12/572,512
(32) Priority Date :02/10/2009
(33) Name of priority country :U.S.A.
(86) International Application No :PCT/US2010/050736
Filing Date :29/09/2010
(87) International Publication No :WO 2011/041425
(61) Patent of Addition to Application Number :NA
Filing Date :NA
(62) Divisional to Application Number :NA
Filing Date :NA

(71)**Name of Applicant :**
1)GENERAL ELECTRIC COMPANY
Address of Applicant :1 RIVER ROAD, SCHENECTADY, NEW YORK, 12345 USA
(72)**Name of Inventor :**
1)KUMAR AJITH KUTTANNAIR

(57) Abstract :
An apparatus including an alternator that is drivable by an engine for producing a first AC electric current, a rectifier in electrical communication with the alternator for producing a DC electric current, an inverter in electrical communication with the rectifier for producing a second AC electric current where the second AC electric current having an acceptable frequency and/or voltage, and the inverter in electrical communication with one or more electric loads responsive to the second AC electric current, and an energy storage device that is able to electrically couple to the alternator, rectifier, and/or inverter.

No. of Pages : 27 No. of Claims : 21

(12) PATENT APPLICATION PUBLICATION
(21) Application No.2824/DELNP/2012 A
(19) INDIA
(22) Date of filing of Application :02/04/2012
(43) Publication Date : 24/07/2015

(54) Title of the invention : RELAY SERVER AND RELAY COMMUNICATION SYSTEM

(51) International classification :H04L 12/56
(31) Priority Document No :2009-230604
(32) Priority Date :02/10/2009
(33) Name of priority country :Japan
(86) International Application No :PCT/JP2010/005680
Filing Date :17/09/2010
(87) International Publication No :WO 2011/039967
(61) Patent of Addition to Application Number :NA
Filing Date :NA
(62) Divisional to Application Number :NA
Filing Date :NA

(71)**Name of Applicant :**
1)MURATA MACHINERY, LTD.
Address of Applicant :3, MINAMI OCHIAI-CHO, KISSHOIN, MINAMI-KU, KYOTO-SHI, KYOTO 601-8326, JAPAN
(72)**Name of Inventor :**
1)TANIMOTO YOSHIFUMI

(57) Abstract :
A virtual network is dynamically created in the event of constructing a relay communication system. Between a first relay server and a second relay server, a VLAN device information sharing unit shares VLAN device information including interface information of client terminals capable of functioning as VLAN devices in a relay group. A VLAN group information creation unit edits the VLAN device information, thereby creating VLAN group information formed by grouping the client terminals indicated in the VLAN device information. A VLAN group information sharing unit shares the VLAN group information among the first relay server, the second relay server, the client terminal connected to the first relay server, and the client terminal connected to the second relay server.

No. of Pages : 68 No. of Claims : 12

(12) PATENT APPLICATION PUBLICATION
(19) INDIA
(22) Date of filing of Application :20/01/2014
(21) Application No.166/DEL/2014 A
(43) Publication Date : 24/07/2015

(54) Title of the invention : USER INTERFACE FOR TOUCH DEVICES

(51) International classification :G06F
(31) Priority Document No :NA
(32) Priority Date :NA
(33) Name of priority country :NA
(86) International Application No :NA
Filing Date :NA
(87) International Publication No : NA
(61) Patent of Addition to Application Number :NA
Filing Date :NA
(62) Divisional to Application Number :NA
Filing Date :NA

(71)**Name of Applicant :**
1)SAMSUNG INDIA ELECTRONICS PVT. LTD.,
Address of Applicant :Logix Cyber Park Tower C 8th to 10th Floor, Tower D Ground to 10th Floor, Plot No. C 28-29, Sector - 62, Noida 201301 Uttar Pradesh India
(72)**Name of Inventor :**
1)AGRAWAL, Pulkit
2)MALIK, Lovlesh
3)SHARMA, Tarun

(57) Abstract :
Methods and devices for dynamically reconfiguration of user interface on a touch device (100) are described. The touch device (100) includes a touch-screen (108) to receive a user swipe input (202) from a user. Thereafter, the touch device (100) determines a user-touchable area based on the user swipe input (202). Based on a reconfiguration setting, the user interface is reconfigured on the touch-screen (108) within the user-touchable area.

No. of Pages : 32 No. of Claims : 27

(12) PATENT APPLICATION PUBLICATION
(19) INDIA
(22) Date of filing of Application :19/01/2015
(21) Application No.166/DEL/2015 A
(43) Publication Date : 24/07/2015

(54) Title of the invention : RECHARGEABLE BATTERY PACK

(51) International classification	:h01m
(31) Priority Document No	:10-2014-0006878
(32) Priority Date	:20/01/2014
(33) Name of priority country	:Republic of Korea
(86) International Application No	:NA
Filing Date	:NA
(87) International Publication No	: NA
(61) Patent of Addition to Application Number	:NA
Filing Date	:NA
(62) Divisional to Application Number	:NA
Filing Date	:NA

(71)**Name of Applicant :**
1)SAMSUNG SDI CO., LTD.,
Address of Applicant :150-20, Gongse-ro, Giheung-gu, Yongin-si, Gyeonggi -do 446-902, Republic of Korea
(72)**Name of Inventor :**
1)MAN-SIK-CHO
2)KUM-YUL-HWANG

(57) Abstract :
A rechargeable battery pack including: a cell holder configured to accommodate unit battery cells; a lower case configured to accommodate the cell holder; an upper case attached to an opening of the lower case and covering the cell holder and the unit battery cells; a tab having an end portion drawn out of a through-hole of the upper case to be on an outer surface of the upper case while coupling the unit battery cells; and a 10 terminal electrically coupled to the end portion of the tab while overlapping therewith and attached to the upper case while covering the through-hole.

No. of Pages : 38 No. of Claims : 13

(12) PATENT APPLICATION PUBLICATION
(19) INDIA
(22) Date of filing of Application :06/03/2012
(21) Application No.2010/DELNP/2012 A
(43) Publication Date : 24/07/2015

(54) Title of the invention : PROCESS FOR THE SYNTHESIS OF FLUORINATED ETHERS OF AROMATIC ACIDS

(51) International classification :C07C 51/367
(31) Priority Document No :61/239,194
(32) Priority Date :02/09/2009
(33) Name of priority country :U.S.A.
(86) International Application No :PCT/US2010/047624
Filing Date :02/09/2010
(87) International Publication No :WO 2011/028866
(61) Patent of Addition to Application Number :NA
Filing Date :NA
(62) Divisional to Application Number :NA
Filing Date :NA

(71)**Name of Applicant :**
1)E. I. DU PONT DE NEMOURS AND COMPANY
Address of Applicant :1007 MARKET STREET, WILMINGTON, DELAWARE 19898, USA
(72)**Name of Inventor :**
1)RITTER, JOACHIM, C.
2)MOLOY, KENNETH, G.
3)POLLINO, JOEL, M.
4)MAHAJAN, SURBHI

(57) Abstract :
Fluorinated ethers of aromatic acids are produced from halogenated aromatic acids in a reaction mixture containing a copper (I) or copper (II) source and a diketone ligand that coordinates to copper. The fluorinated ethers of aromatic acids made using the process described herein can be applied to, e.g., fibers, yarns, carpets, garments, films, molded parts, paper and cardboard, stone, and tile to impart soil, water and oil resistance. By incorporating the fluorinated ethers of aromatic acids, or diesters thereof, into polymer backbones, more lasting soil, water and oil resistance, as well as improved flame retardance, can be achieved.

No. of Pages : 40 No. of Claims : 15

(12) PATENT APPLICATION PUBLICATION
(21) Application No.2826/DELNP/2012 A
(19) INDIA
(22) Date of filing of Application :02/04/2012
(43) Publication Date : 24/07/2015

(54) Title of the invention : NOVEL DOSING REGIMEN AND METHOD OF TREATMENT

(51) International classification :A61K 39/00
(31) Priority Document No :61/253,804
(32) Priority Date :21/10/2009
(33) Name of priority country :U.S.A.
(86) International Application No :PCT/US2010/053579
Filing Date :21/10/2010
(87) International Publication No :WO 2011/050180
(61) Patent of Addition to Application Number :NA
Filing Date :NA
(62) Divisional to Application Number :NA
Filing Date :NA

(71)**Name of Applicant :**
1)IMMUNOGEN, INC.
Address of Applicant :830 WINTER STREET, WALTHAM, MASSACHUSETTS 02451, USA
(72)**Name of Inventor :**
1)LAMBERT JOHN
2)O'LEARY JAMES J.
3)SCHINDLER JOANNE ELIZABETH SARAH
4)WEITMAN STEVEN
5)QIN ALBERT

(57) Abstract :
This invention relates to a method of treatment and dosing regimen for treating disease, such as cancer and mammalian tumors, wherein therapy with a cytotoxic drug is suitable, by the administration of an antibody-toxin conjugate, such as a maytansinoid toxin, by infusion at an initial infusion rate of 1 mg/min or lower on a schedule selected from the group consisting of: (1) an amount of at least about 90 mg/m2 on day 1 and day 8, every three weeks; (2) at least an amount of about 30 mg/m2 on day 1, day 2 and day 3, every three weeks; (3) at least an amount of about 45 mg/m2 on day 1, day 8, and day 15, every 4 weeks; and (4) at least an amount of about 45 mg/m2 on day 1, day 8 and day 15, every 3 weeks.

No. of Pages : 56 No. of Claims : 75

(12) PATENT APPLICATION PUBLICATION
(19) INDIA
(22) Date of filing of Application :02/04/2012
(21) Application No.2827/DELNP/2012 A
(43) Publication Date : 24/07/2015

(54) Title of the invention : VEHICLE DOOR DRIVING APPARATUS

(51) International classification :E05F 15/14
(31) Priority Document No :2009-262291
(32) Priority Date :17/11/2009
(33) Name of priority country :Japan
(86) International Application No :PCT/JP2010/070312
Filing Date :15/11/2010
(87) International Publication No :WO 2011/062144
(61) Patent of Addition to Application Number :NA
Filing Date :NA
(62) Divisional to Application Number :NA
Filing Date :NA

(71)**Name of Applicant :**
1)AISIN SEIKI KABUSHIKI KAISHA
Address of Applicant :1, ASAHI-MACHI 2-CHOME, KARIYA-SHI, AICHI-KEN 448-8650, JAPAN
(72)**Name of Inventor :**
1)ISHIDA TOSHIHIKO
2)YASUHARA MASAYOSHI

(57) Abstract :
Disclosed is a vehicle door driving apparatus provided with a driving mechanism and a rope member. The driving mechanism is fixed to an inner section of a vehicle door which opens and closes a door opening formed in a vehicle body, the driving mechanism including a motor and a drum which is rotationally driven by the motor. The rope member is wound around the drum and linked to the vehicle body, and rotation of the drum is transmitted to the vehicle body by way of the rope member which causes the vehicle door to open and close. The drum is disposed in the inner section of the vehicle door in such a way as to at least partially overlap in a dimensional space in the vehicle width direction defined by the external shape of the motor. The driving mechanism is provided with: a first small-diameter gear linked to the rotary axis of the motor in such a way that the first small-diameter gear rotates together with the rotary shaft of the motor; a transmission gear rotatable around the axis extending in the vehicle width direction; a sun gear rotatable around the axis extending in the vehicle width direction; a ring gear disposed on the same axis as the sun gear; and a carrier which has a planet gear that engages with the sun gear and the ring gear, and which is linked to the drum in such a way that the carrier rotates together with the drum.

No. of Pages : 48 No. of Claims : 5

(12) PATENT APPLICATION PUBLICATION
(19) INDIA
(22) Date of filing of Application :03/04/2012
(21) Application No.1033/DEL/2012 A
(43) Publication Date : 24/07/2015

(54) Title of the invention : NON-CONTACT MAGNETIC PARTICLE INSPECTION APPARATUS

(51) International classification :G01N
(31) Priority Document No :13/083907
(32) Priority Date :11/04/2011
(33) Name of priority country :U.S.A.
(86) International Application No :NA
Filing Date :NA
(87) International Publication No :NA
(61) Patent of Addition to Application Number :NA
Filing Date :NA
(62) Divisional to Application Number :NA
Filing Date :NA

(71)**Name of Applicant :**
1)GENERAL ELECTRIC COMPANY
Address of Applicant :1 RIVER ROAD, SCHENECTADY, NEW YORK 12345, U.S.A.
(72)**Name of Inventor :**
1)BERGMAN ROBERT WILLIAM

(57) Abstract :
A non-contact magnetic particle inspection apparatus (2) includes a test article support and manipulation system (34) having a first rail (38) that extends along a first axis, a second rail (39) that extends along the first axis, and a third rail (70) that extends a second axis. The third rail (70) includes a first end (41, 47, 72) that extends to a second end (42, 48, 73) through an intermediate portion (43, 49, 74). The first end (41, 47, 72) is mounted to the first rail (38) and the second end (42, 48, 73) is mounted to the second rail (39). A mounting fixture (90) is mounted to the third rail (70). The mounting fixture (90) includes a test article mounting system (93) and a test article orientation system (95). The test article orientation system (95) is configured and disposed to selectively manipulate a test article (114) within a magnetic field (25).

No. of Pages : 16 No. of Claims : 11

(12) PATENT APPLICATION PUBLICATION
(19) INDIA
(22) Date of filing of Application :06/03/2012
(21) Application No.2011/DELNP/2012 A
(43) Publication Date : 24/07/2015

(54) Title of the invention : PROCESS FOR THE SYNTHESIS OF FLUORINATED ETHERS OF AROMATIC ACIDS

(51) International classification :C07C 51/367
(31) Priority Document No :61/239,103
(32) Priority Date :02/09/2009
(33) Name of priority country :U.S.A.
(86) International Application No :PCT/US2010/047596
Filing Date :02/09/2010
(87) International Publication No :WO 2011/028852
(61) Patent of Addition to Application Number :NA
Filing Date :NA
(62) Divisional to Application Number :NA
Filing Date :NA

(71)**Name of Applicant :**
1)E. I. DU PONT DE NEMOURS AND COMPANY
Address of Applicant :1007 MARKET STREET, WILMINGTON, DELAWARE 19898, USA
(72)**Name of Inventor :**
1)RITTER, JOACHIM, C.
2)MOLOY, KENNETH, GENE
3)POLLINO, JOEL, M.
4)MAHAJAN, SURBHI

(57) Abstract :
Fluorinated ethers of aromatic acids are produced from halogenated aromatic acids in a reaction mixture containing a copper (I) or copper (II) source and an amino acid ligand that coordinates to copper. The fluorinated ethers of aromatic acids made using the process described herein can be applied to, e.g., fibers, yarns, carpets, garments, films, molded parts, paper and cardboard, stone, and tile to impart soil, water and oil resistance. By incorporating the fluorinated ethers of aromatic acids, or diesters thereof, into polymer backbones, more lasting soil, water and oil resistance, as well as improved flame retardance, can be achieved.

No. of Pages : 38 No. of Claims : 15

(12) PATENT APPLICATION PUBLICATION
(19) INDIA
(22) Date of filing of Application :06/03/2012
(21) Application No.2012/DELNP/2012 A
(43) Publication Date : 24/07/2015

(54) Title of the invention : MAC LAYER ARCHITECTURE FOR SUPPORTING ENHANCED UPLINK

(51) International classification :H04B 7/005
(31) Priority Document No :60/568,944
(32) Priority Date :07/05/2004
(33) Name of priority country :U.S.A.
(86) International Application No :PCT/US2005/014876
Filing Date :29/04/2005
(87) International Publication No :WO 2005/115021
(61) Patent of Addition to Application Number :NA
Filing Date :NA
(62) Divisional to Application Number :7342/DELNP/2006
Filed on :05/12/2006

(71)**Name of Applicant :**
1)INTERDIGITA LTECHNOLOGY CORPORATON
Address of Applicant :3411 SILVERSIDE ROAD, CONCORD PLAZA, SUITE 105, HAGLEY BUILDING, WILMINGTON, DELAWARE 19810, USA
(72)**Name of Inventor :**
1)TERRY, STEPHEN, E.
2)ZHANG, GUODONG
3)DICK, STEPHEN, G.

(57) Abstract :
A medium access control (MAC) layer architecture and functionality for supporting enhanced uplink (EU). A MAC entity for EU, (i.e., a MAC-e entity) (120, 220, 320), is incorporated into a wireless transmit/receive unit (WTRU) (100), a Node-B (200) and a radio network controller (RNC) (300), respectively. The WTRU MAC-e entity (120) handles hybri8d-automatic repeat request (H-ARQ) transmissions and retransmissions, priority handling MAC-e multiplexing, and transport format combination (TFC) selection. The Node-B MAC-e entity (220) handles H-ARQ transmissions and retransmissions, E-DCH (102) scheduling and MAC-e de-multiplexing. The RNC MAC-e entity (320) provides in sequence delivery and handles combining of data from different Node-Bs.

No. of Pages : 21 No. of Claims : 38

(12) PATENT APPLICATION PUBLICATION
(19) INDIA
(22) Date of filing of Application :06/03/2012
(21) Application No.2013/DELNP/2012 A
(43) Publication Date : 24/07/2015

(54) Title of the invention : PROCESS FOR THE SYNTHESIS OF FLUORINATED ETHERS OF AROMATIC ACIDS

(51) International classification :C07C 65/21
(31) Priority Document No :61/239,107
(32) Priority Date :02/09/2009
(33) Name of priority country :U.S.A.
(86) International Application No :PCT/US2010/047595
Filing Date :02/09/2010
(87) International Publication No :WO 2011/028851
(61) Patent of Addition to Application Number :NA
Filing Date :NA
(62) Divisional to Application Number :NA
Filing Date :NA

(71)**Name of Applicant :**
1)E. I. DU PONT DE NEMOURS AND COMPANY
Address of Applicant :1007 MARKET STREET, WILMINGTON, DELAWARE 19898, USA
(72)**Name of Inventor :**
1)RITTER, JOACHIM, C.
2)MOLOY, KENNETH, GENE
3)DRYSDALE, NEVILLE, EVERTON
4)POLLINO, JOEL, M.
5)MAHAJAN, SURBHI

(57) Abstract :
New fluorinated ethers of aromatic acids and diesters are disclosed. These compositions can be applied to, e.g., fibers, yarns, carpets, garments, films, molded parts, paper and cardboard, stone, and tile to impart soil, water and oil resistance. By incorporating the fiuorinated ethers of aromatic acids, or diesters thereof, into polymer backbones, more lasting soil, water and oil resistance, as well as improved flame retardance, can be achieved.

No. of Pages : 40 No. of Claims : 12

(12) PATENT APPLICATION PUBLICATION
(21) Application No.2840/DELNP/2012 A
(19) INDIA
(22) Date of filing of Application :03/04/2012
(43) Publication Date : 24/07/2015

(54) Title of the invention : INDICATOR APPARATUS

(51) International classification :B60N 2/36
(31) Priority Document No :10 2009 056 155.2
(32) Priority Date :25/11/2009
(33) Name of priority country :Germany
(86) International Application No :PCT/EP2010/007062
Filing Date :22/11/2010
(87) International Publication No :WO 2011/063920
(61) Patent of Addition to Application Number :NA
Filing Date :NA
(62) Divisional to Application Number :NA
Filing Date :NA

(71)**Name of Applicant :**
1)KEIPER GMBH & CO. KG
Address of Applicant :HERTELSBRUNNENRING 2, 67657 KAISERSLAUTERN, GERMANY
(72)**Name of Inventor :**
1)VOLKER WINDECKER
2)STEFAN HABER
3)DENISE SCHMITT
4)KADIR YASAROGLU
5)BERND HEIMANN
6)TOBIAS BRAUN
7)PETER MULLER

(57) Abstract :
The invention relates to an indicator apparatus for signalling that a foldable backrest of a seat in particular a rear seat in a motor vehicle, is not locked, having a handle (9) which can he pivoted between a locked position and an unlocked position about a pivot axis (12) and by means of which a catch (4) of a locking apparatus can be carried along between a blocked position and an unblocked position and, via a transmission element, an indicator element (18) which is guided in a guide (19) between a non-indication position, in which it is recessed in the guide, and an indication position, in which it projects outward partially out of the guide (19), can be driven in a displaceable manner. In this case, the indicator element (18) can be moved against a spring force into its non-indication position by the application of force to its outer end region, which projects out of the guide (19), when the handle (9) is in the unlocked position. The transmission element is a spring element which is fixedly connected both to the handle (9) and to the indicator element (18).

No. of Pages : 23 No. of Claims : 10

(12) PATENT APPLICATION PUBLICATION
(19) INDIA
(22) Date of filing of Application :03/04/2012
(21) Application No.1034/DEL/2012 A
(43) Publication Date : 24/07/2015

(54) Title of the invention : ELEVATOR

(51) International classification :F16B
(31) Priority Document No :P2011-087172
(32) Priority Date :11/04/2011
(33) Name of priority country :Japan
(86) International Application No :NA
Filing Date :NA
(87) International Publication No :NA
(61) Patent of Addition to Application Number :NA
Filing Date :NA
(62) Divisional to Application Number :NA
Filing Date :NA

(71)**Name of Applicant :**
1)TOSHIBA ELEVATOR KABUSHIKI KAISHA
Address of Applicant :5-27, KITASHINAGAWA 6-CHOME, SHINAGAWA-KU, TOKYO, JAPAN
(72)**Name of Inventor :**
1)ASAMI IKUO

(57) Abstract :
There are provided cage doors (2) in a freely openable/closable fashion in a passenger cage (1) that ascends/descends in a shaft provided in a building; first frictional members (10) on said cage doors; and second frictional members (13) on the side of the building; and the first frictional members (10) and second frictional members (13) are arranged in mutually facing positions and when said cage doors (2) are fully open the first frictional members (10) and second frictional members (13) are pressed together in a slidable fashion.

No. of Pages : 26 No. of Claims : 6

(12) PATENT APPLICATION PUBLICATION
(21) Application No.160/DEL/2014 A
(19) INDIA
(22) Date of filing of Application :20/01/2014
(43) Publication Date : 24/07/2015

(54) Title of the invention : A METHOD AND APPARATUS FOR SIMILARITY DETECTION FOR DOCUMENTSBASED ON CONTENTS INCLUDING TEXTS TABLES FLOWCHARTS AND EQUATIONS

(51) International classification :G06F
(31) Priority Document No :NA
(32) Priority Date :NA
(33) Name of priority country :NA
(86) International Application No :NA
Filing Date :NA
(87) International Publication No : NA
(61) Patent of Addition to Application Number :NA
Filing Date :NA
(62) Divisional to Application Number :NA
Filing Date :NA

(71)**Name of Applicant :**
1)THE DIRECTOR, INDIAN INSTITUTE OF INFORMATION TECHNOLOGY, ALLAHABAD
Address of Applicant :DEOGHAT, JHALWA, ALLAHABAD - 211012, UTTAR PRADESH, INDIA.
(72)**Name of Inventor :**
1)SIDDHARTH
2)TRIPATHI, RAMESH CHANDRA
3)TIWARI, MURLI DHAR

(57) Abstract :
Information overload through the internet and advent of software tools for easy manipulation of e-contents are making it an arduous task to detect plagiarism; an offence under copyright laws. The present invention relates to a computer-implemented method and apparatus which obtains textual content from a computer-readable format comprising all popular file formats duly detecting and storing separately the textual parts, tables, equations and flowcharts/block diagrams of the concerned documents. The method steps comprises extraction of text from the document in computer-readable format, removal of special symbols from the textual part of documents, whereby its output is only the words and numerical digits present in documents that have to be checked for similarity after due removal of connectors, stop words to work, only upon the words left which have significance in similarity detection, removal of suffixes for the normalization of words by changing them to their root form (stemming), hashing the root words to make them ready for comparing, searching the similarity of every phrase in query document with every phrase in suspect documents repository using software tools for manipulation of textual content of text and comprising of query as well as repository.

No. of Pages : 37 No. of Claims : 28

(12) PATENT APPLICATION PUBLICATION
(21) Application No.1890/DELNP/2012 A
(19) INDIA
(22) Date of filing of Application :02/03/2012
(43) Publication Date : 24/07/2015

(54) Title of the invention : DEVICE FOR SUPPORTING A TURBINE RING, TURBINE HAVING SUCH A DEVICE, AND TURBINE ENGINE HAVING SUCH A TURBINE

(51) International classification :F01D 11/24
(31) Priority Document No :0956049
(32) Priority Date :04/09/2009
(33) Name of priority country :France
(86) International Application No :PCT/EP2010/062914
Filing Date :02/09/2010
(87) International Publication No :WO 2011/026921
(61) Patent of Addition to Application Number :NA
Filing Date :NA
(62) Divisional to Application Number :NA
Filing Date :NA

(71)**Name of Applicant :**
1)TURBOMECA
Address of Applicant :F-64510 BORDES, FRANCE
(72)**Name of Inventor :**
1)CHRISTOPHE-OLIVIER MORAINES
2)FREDERIC PHILIPPE JEAN- JACQUES PARDO

(57) Abstract :
The invention relates to a device for supporting a. ring (5) of gas turbine (1), the ring (5) being suitable for surrounding mobile blades (3) of the turbine (1) which, are driven by a gas stream (G) flowing upstream to downstream. The device comprises at least one upstream hook (12) facing upstream, to be housed ban upstream groove (8) of the ring (5), opened toward the downstream direction, and at least one downstream hook (13) facing downstream, to be housed in a downstream groove (10) of the ring (5), opened toward the upstream direction. The hooks (12, 13) are thus protected and the clearances at the apexes of the blades (3) are more easily controlled. The device comprises, upstream from the upstream hook (12), means (16) for injecting cooling gas to cool the upstream hook (12) and/or comprises, downstream from the downstream hook (13), means (17, 18) for injecting a cooling gas to cool the downstream hook (13).

No. of Pages : 17 No. of Claims : 8

(12) PATENT APPLICATION PUBLICATION
(19) INDIA
(22) Date of filing of Application :03/04/2012
(21) Application No.2858/DELNP/2012 A
(43) Publication Date : 24/07/2015

(54) Title of the invention : MULTIPOINT-TO-MULTIPOINT SERVICE FOR A COMMUNICATIONS NETWORK

(51) International classification :H04L 12/46
(31) Priority Document No :09172854.3
(32) Priority Date :13/10/2009
(33) Name of priority country :EPO
(86) International Application No :PCT/EP2009/063708
Filing Date :20/10/2009
(87) International Publication No :WO 2011/044957
(61) Patent of Addition to Application Number :NA
Filing Date :NA
(62) Divisional to Application Number :NA
Filing Date :NA

(71)**Name of Applicant :**
1)TELEFONAKTIEBOLAGET LM ERICSSON (PUBL)
Address of Applicant :SE-164 83 STOCKHOLM (SE) Sweden
(72)**Name of Inventor :**
1)CORTI, ANDREA
2)FIORONE, RAOUL
3)MARTINOTTI, RICCARDO

(57) Abstract :
A multipoint-to-multipoint service is provided between a set of edge nodes (T- PE) of a communications network (10). The network (10) comprises at least two subnetworks (11-14) and an intermediate node (S-PE) at a boundary between subnetworks. For each pair of edge nodes (T-PE) comprising an edge node in a first of the sub-networks and an edge node in a second of the sub-networks, a multi-segment pseudowire connection (20) is configured between the pair of edge nodes (T-PE). The pseudowire connection passing via at least one intermediate node (S-PE). At the intermediate node (S-PE) forwarding data is configured which specifies a forwarding relationship between pseudowire segments corresponding to the multi-segment pseudowire connections. A topology of Label Switched Paths (LSP) carry the multi- segment pseudowires. Edge nodes (T-PE) within a sub-network (11, 12, 13) can be connected with a mesh topology or a hub-and-spoke topology.

No. of Pages : 34 No. of Claims : 18

(12) PATENT APPLICATION PUBLICATION
(21) Application No.181/DEL/2015 A
(19) INDIA
(22) Date of filing of Application :20/01/2015
(43) Publication Date : 24/07/2015

(54) Title of the invention : VANE COMPRESSOR

(51) International classification	:f04c	(71)**Name of Applicant :**
(31) Priority Document No	:2014-008561	**1)KABUSHIKI KAISHA TOYOTA JIDOSHOKKI** Address of Applicant :2-1, Toyoda-cho, Kariya-shi, Aichi-ken, JAPAN
(32) Priority Date	:21/01/2014	
(33) Name of priority country	:Japan	(72)**Name of Inventor :**
(86) International Application No	:NA	**1)Tsubasa Mitsui**
Filing Date	:NA	**2)Shinichi Sato**
(87) International Publication No	: NA	**3)Satoshi Koumura**
(61) Patent of Addition to Application Number	:NA	**4)Kazuo Kobayashi**
Filing Date	:NA	
(62) Divisional to Application Number	:NA	
Filing Date	:NA	

(57) Abstract :
The vane compressor includes a cylinder block, a rotary shaft and a rotor. The rotor has a plurality of vanes and vane slots where the vanes are slidably received. A plurality of backpressure chambers is formed between the bottom of each vane and the inner surface of its associated vane slot. The rotor is mounted on the rotary shaft for rotation therewith in the cylinder block. The vane compressor further includes a plurality of compression chambers, a discharge chamber and backpressure feeding passage that connects the backpressure chambers to the discharge chamber. The backpressure feeding passage includes a first passage, second passage, a third passage, a first chamber, a second chamber and a rotating passage provided in the rotary shaft. The communication between the first passage and the second passage and the communication between the second passage and the third passage is performed only through the rotating passage.

No. of Pages : 19 No. of Claims : 3

(12) PATENT APPLICATION PUBLICATION
(19) INDIA
(22) Date of filing of Application :03/04/2012
(21) Application No.2852/DELNP/2012 A
(43) Publication Date : 24/07/2015

(54) Title of the invention : METHOD AND APPARATUS FOR DETECTING UMTS TERMINAL

(51) International classification :H04W 64/00
(31) Priority Document No :200910172910.7
(32) Priority Date :03/09/2009
(33) Name of priority country :China
(86) International Application No :PCT/CN2010/076351
Filing Date :25/08/2010
(87) International Publication No :WO 2011/026405
(61) Patent of Addition to Application Number :NA
Filing Date :NA
(62) Divisional to Application Number :NA
Filing Date :NA

(71)**Name of Applicant :**
1)ZTE CORPORATION
Address of Applicant :ZTE PLAZA, KEJI ROAD SOUTH, HI-TECH INDUSTRIAL PARK, NANSHAN DISTRICT, SHENZHEN, GUANGDONG PROVINCE 518057, P.R. CHINA
(72)**Name of Inventor :**
1)ZHIGUO ZHAN
2)YANG LI
3)BIN DAI

(57) Abstract :
The present invention discloses a method and an apparatus for detecting a Universal Mobile Telecommunications System (UMTS) terminal. The method comprises: composing the Transaction Detail Record (TDR) of a Radio Access Network Application Part (RANAP) at a packet switch domain interface and a circuit switch domain interface; acquiring an International Mobile Subscriber Identity (IMSI) and an International Mobile Equipment Identity (IMEI) from the TDR, and establishing the corresponding relation between the IMSI and the IMEI; analyzing and obtaining operation information of terminal corresponding to each IMEI according to the TDR, and determining the IMEI of an abnormal terminal according to the operation information obtained by analyzing; determining the IMSI code used by the abnormal terminal according to the corresponding relation between the IMEI and the IMSI.By the method and the apparatus, and the detailed information of the terminal can be understood in detail.

No. of Pages : 19 No. of Claims : 10

(12) PATENT APPLICATION PUBLICATION
(19) INDIA
(22) Date of filing of Application :03/04/2012
(21) Application No.2853/DELNP/2012 A
(43) Publication Date : 24/07/2015

(54) Title of the invention : REDUCED LATENCY BARRIER TRANSACTION REQUESTS IN INTERCONNECTS

(51) International classification :G06F 13/16
(31) Priority Document No :0917946.6
(32) Priority Date :13/10/2009
(33) Name of priority country :U.K.
(86) International Application No :PCT/GB2010/001819
Filing Date :28/09/2010
(87) International Publication No :WO 2011/045555
(61) Patent of Addition to Application Number :NA
Filing Date :NA
(62) Divisional to Application Number :NA
Filing Date :NA

(71)**Name of Applicant :**
1)ARM LIMITED
Address of Applicant :110 FULBOURN ROAD, CHERRY HINTON, CAMBRIDGE CB1 9NJ, UNITED KINGDOM
(72)**Name of Inventor :**
1)PETER ANDREW RIOCREUX
2)BRUCE JAMES MATHEWSON
3)CHRISTOPHER WILLIAM LAYCOCK
4)RICHARD ROY GRISENTHWAITE

(57) Abstract :
Interconnect circuitry (10) is configured to respond to a barrier transaction request to maintain an ordering of at least some transaction requests with respect to said barrier transaction request within a stream of transaction requests by not allowing reordering of at least some of said transactions request that occur before said barrier transaction request in said stream of transaction requests with respect to at least some of said transaction requests that occur after said barrier transaction request in said stream of transaction requests; it also comprises a response signal generator, said response signal generator being responsive to receipt of said barrier transaction request to issue a response signal, said response signal indicating to upstream blocking circuitry (90) that any transaction requests delayed in response to said barrier transaction request can be transmitted further.

No. of Pages : 87 No. of Claims : 45

(12) PATENT APPLICATION PUBLICATION
(21) Application No.2854/DELNP/2012 A
(19) INDIA
(22) Date of filing of Application :03/04/2012
(43) Publication Date : 24/07/2015

(54) Title of the invention : NICKEL-PLATED STEEL SHEET FOR MANUFACTURING PIPE HAVING CORROSION RESISTANCE AGAINST FUEL VAPORS, PIPE WHICH USES THE STEEL SHEET, AND FUEL SUPPLY PIPE WHICH USES THE STEEL SHEET

(51) International classification :C25D 5/50
(31) Priority Document No :2009-216606
(32) Priority Date :18/09/2009
(33) Name of priority country :Japan
(86) International Application No :PCT/JP2010/005645
Filing Date :16/09/2010
(87) International Publication No :WO 2011/033774
(61) Patent of Addition to Application Number :NA
Filing Date :NA
(62) Divisional to Application Number :NA
Filing Date :NA

(71)**Name of Applicant :**
1)TOYO KOHAN CO., LTD.
Address of Applicant :2-12, YONBAN-CHO, CHIYODA-KU, TOKYO 102-8447, JAPAN
(72)**Name of Inventor :**
1)TATSUO TOMOMORI
2)KOH YOSHIOKA
3)HIDEYUKI MINAGI

(57) Abstract :
Provided is a steel sheet for manufacturing a pipe having corrosion resistance against fuel vapor of fuel such as gasoline, light oil, bioethanol or bio-diesel fuel, and a pipe and a fuel supply pipe. In the steel sheet for manufacturing a pipe, a Fe-Ni diffusion layer and a softened Ni layer which is provided on the Fe-Ni diffusion layer are formed on a surface of a steel sheet, and a thickness of the softened Ni layer is set to a value which falls within a range of 0. 9 to 8.1μm thus having corrosion resistance against fuel vapor. In the pipe and the fuel supply pipe, a Fe-Ni diffusion layer and a softened Ni layer which is provided on the Fe-Ni diffusion layer are formed on an inner surface of a pipe formed of a steel sheet, and a thickness of the softened Ni layer is set to a value which falls within a range of 0.9 to 8.1μm. In a fuel supply pipe 20 for supplying fuel to a fuel tank 23, the fuel supply pipe includes: a large-diameter pipe portion 21 through which the fuel passes; and a small-diameter pipe portion 22 which makes an upper portion of the large-diameter pipe portion and a lower portion of the large-diameter pipe portion communicate with each other for ventilation, and a Fe-Ni diffusion layer and a softened Ni layer which is provided on the Fe-Ni diffusion layer are formed on an inner surface of at least the small-diameter pipe portion, and a thickness of the softened Ni layer is set to a value which falls within a range of 0.9 to 8.1μm.

No. of Pages : 25 No. of Claims : 6

(12) PATENT APPLICATION PUBLICATION
(21) Application No.1899/DELNP/2012 A
(19) INDIA
(22) Date of filing of Application :02/03/2012
(43) Publication Date : 24/07/2015

(54) Title of the invention : WATER ANALYSIS MEASUREMENT ARRANGEMENT

(51) International classification :G01N 27/333
(31) Priority Document No :09169372.1
(32) Priority Date :03/09/2009
(33) Name of priority country :EUROPEAN UNION
(86) International Application No :PCT/EP2010/061425
Filing Date :05/08/2010
(87) International Publication No :WO 2011/026707
(61) Patent of Addition to Application Number :NA
Filing Date :NA
(62) Divisional to Application Number :NA
Filing Date :NA

(71)**Name of Applicant :**
1)HACH LANGE GMBH
Address of Applicant :KONIGSWEG 10D, 14163 BERLIN, GERMANY
(72)**Name of Inventor :**
1)MICHAEL KUSSMANN
2)LOTHAR HEIDEMANNS
3)ANDREAS JONAK
4)MARKUS HAHN
5)HEINZ RUDDE
6)CLAUDIA RIEGER
7)AXEL LEYER

(57) Abstract :
The invention relates to a water analysis measurement arrangement 10 for de¬termining ions and/or ionic compounds in an aqueous medium 18. The water analysis measurement arrangement 10 comprises a closed buffer solution hous¬ing 20 having a pH buffer solution 24 connected to an aqueous medium 18 by means of a electrolyte bridge 22, wherein the concentration of ions and/or ionic compounds in said medium 18 is to be determined. The reference electrode 16 disposed in the buffer solution housing 20 is attached to a high-impedance am¬plifier 53, wherein a capacitive element 57 is connected between the reference electrode 16 and the amplifier ground. The amplifier ground is thereby present at a ground electrode 12 directly contacting the aqueous medium 18. The water analysis measurement arrangement 10 further comprises a measurement elec¬trode 14 directly contacting the aqueous medium 18, and an AC voltage genera¬tor 50 present between the amplifier ground and the ground electrode 12. The water analysis measurement arrangement 10 further comprises a redundant unit 30 comprising a separate low-impedance redundant electrode 32 in the pH buffer solution 24 in the closed buffer solution housing 20, and a high-impedance re¬dundant electrode amplifier 34 having a capacitive element 36 to the amplifier ground.

No. of Pages : 14 No. of Claims : 13

(12) PATENT APPLICATION PUBLICATION
(19) INDIA
(22) Date of filing of Application :22/01/2014
(21) Application No.197/DEL/2014 A
(43) Publication Date : 24/07/2015

(54) Title of the invention : INTEGRATED OPTICAL CHIP FOR FIBER OPTIC GYROSCOPE

(51) International classification :G01C19/00
(31) Priority Document No :NA
(32) Priority Date :NA
(33) Name of priority country :NA
(86) International Application No :NA
Filing Date :NA
(87) International Publication No : NA
(61) Patent of Addition to Application Number :NA
Filing Date :NA
(62) Divisional to Application Number :NA
Filing Date :NA

(71)**Name of Applicant :**
1)DIRECTOR GENERAL, DEFENCE RESEARCH & DEVELOPMENT ORGANISATION
Address of Applicant :Ministry of Defence, Govt of India, Room No 348, B-Wing, DRDO Bhawan, Rajaji Marg, New Delhi 110105 India
(72)**Name of Inventor :**
1)Uma Shanker Tripathi
2)Ajay Mishra
3)Ashok Nath Kaul
4)Arun Kumar Gupta

(57) Abstract :
The present invention relates to an Integrated Optical Chip (IOC) having improved Polarization Extinction Ratio (PER) of an optical signal being embedded within Fiber Optic Gyroscope (FOG).The FOG comprising at least one optical waveguide embedded on a chemical substrate; the optical waveguide is in the form of polarizer, splitter and electrodes for phase modulation. The PER of IOC has been enhanced by providing bending at the input optical waveguide and by grinding the side wall of the IOC. A process of determining angular velocity by using an IOC having enhanced Polarization Extinction Ratio (PER) integrated with Fiber Optic Gyroscope (FOG) is also disclosed. The process, disclosed herein, comprising sending an optical signal by a light source; allowing the split optical signal received from the coupler to pass through the IOC and a loop of fiber; receiving the optical signal from the IOC by the coupler and combining the same; and detecting the combined optical signal by an optical detector in order to determine the angular velocity. [

No. of Pages : 19 No. of Claims : 17

(12) PATENT APPLICATION PUBLICATION
(21) Application No.2866/DELNP/2012 A
(19) INDIA
(22) Date of filing of Application :03/04/2012
(43) Publication Date : 24/07/2015

(54) Title of the invention : ELECTRIC MACHINE, HYDRAULICS UNIT

(51) International classification :H02K 5/124
(31) Priority Document No :10 2009 045 797.6
(32) Priority Date :19/10/2009
(33) Name of priority country :Germany
(86) International Application No :PCT/EP2010/062187
Filing Date :20/08/2010
(87) International Publication No :WO 2011/047903
(61) Patent of Addition to Application Number :NA
Filing Date :NA
(62) Divisional to Application Number :NA
Filing Date :NA

(71)**Name of Applicant :**
1)ROBERT BOSCH GMBH
Address of Applicant :POSTFACH 30 02 20, 70442 S STUTTGART, GERMANY
(72)**Name of Inventor :**
1)ISEL, ALAIN-BERNARD

(57) Abstract :
An electric machine (2) comprising at least one rotor shaft (3) that is rotatably mounted in a housing (4) by at least one rolling body bearing (5), wherein at least one commutator (14) is arranged in a rotationally fixed manner on the rotor shaft (3). In an embodiment, a centrifugal disc (16) is arranged in a rotationally fixed manner on the rotor shaft (3) on a side of the rolling body bearing (5) opposite to the commutator (14).

No. of Pages : 12 No. of Claims : 10

(12) PATENT APPLICATION PUBLICATION
(21) Application No.2867/DELNP/2012 A
(19) INDIA
(22) Date of filing of Application :03/04/2012
(43) Publication Date : 24/07/2015

(54) Title of the invention : FUEL INJECTION DEVICE WITH QUANTITY DIFFERENCE CONTROL FOR AN ELECTRIC PRE-SUPPLY PUMP

(51) International classification :F02M 59/34
(31) Priority Document No :102009047376.9
(32) Priority Date :02/12/2009
(33) Name of priority country :Germany
(86) International Application No :PCT/EP2010/064710
Filing Date :04/10/2010
(87) International Publication No :WO 2011/067008
(61) Patent of Addition to Application Number :NA
Filing Date :NA
(62) Divisional to Application Number :NA
Filing Date :NA

(71)**Name of Applicant :**
1)ROBERT BOSCH GMBH
Address of Applicant :POSTFACH 30 02 20, 70442 STUTTGART, GERMANY
(72)**Name of Inventor :**
1)BOECKING, FRIEDRICH

(57) Abstract :
Described herein is a fuel injection device (10) for an internal combustion engine, comprising a fuel pre-supply pump (13), which delivers fuel from a fuel tank (11) via a delivery line (18) on a pressure-side to a high-pressure fuel pump (12). The fuel pre-supply pump (13) comprises a drive (13a), in particular electric drive, which is independent of the high-pressure pump (12); and the delivery line (18) on the pressure side is connected to a fuel return line (17) via an electrically actuated quantity difference valve (21) having an adjustable valve cross-section.

No. of Pages : 8 No. of Claims : 7

(12) PATENT APPLICATION PUBLICATION
(19) INDIA
(22) Date of filing of Application :02/04/2012
(21) Application No.2788/DELNP/2012 A
(43) Publication Date : 24/07/2015

(54) Title of the invention : A METHOD FOR MAKING A CATALYST PRECURSOR WITH AN ENHANCED HYDROTHERMAL STABILITY

(51) International classification :B01J 21/04
(31) Priority Document No :11/114,804
(32) Priority Date :26/04/2005
(33) Name of priority country :U.S.A.
(86) International Application No :PCT/US06/011021
Filing Date :27/03/2006
(87) International Publication No :WO 2006/115668
(61) Patent of Addition to Application Number :NA
Filing Date :NA
(62) Divisional to Application Number :7013/DELNP/2007
Filed on :11/09/2007

(71)**Name of Applicant :**
1)SUD-CHEMIE INC.,
Address of Applicant :1600 WEST HILL STREET, LOUISVILLE, KENTUCKY 40210 USA
(72)**Name of Inventor :**
1)RAFAEL L. ESPINOZA,
2)KANDASWAMY JOTHIMURUGESAN,
3)YAMING JIN,
4)DALE J. ORTEGO, JR.,
5)KRISTI A. FJARE,
6)BEATRICE C. ORTEGO,

(57) Abstract :
The present invention relates to a method for making a catalyst precursor with an enhanced hydrothermal stability, comprising: a) shaping a material comprising a crystalline hydrous alumina precursor to form a shaped alumina precursor material in the form of particles with a desired average particle size, wherein the crystalline hydrous alumina precursor comprises at least one crystalline boehmite having an average crystallite size from about 4 nm to about 30 nm or comprises at least one crystalline bayerite; b) optionally, treating the shaped alumina precursor material to a temperature not exceeding about 350°C so as to retain a substantial portion of the crystalline hydrous alumina precursor; c) contacting the shaped alumina precursor material containing the crystalline hydrous alumina precursor with at least one structural stabilizer or a compound thereof; d) calcining the shaped alumina precursor material in the presence of the at least one structural stabilizer or compound thereof under suitable conditions to effect the conversion of the crystalline hydrous alumina precursor to a stabilized aluminum oxide structure and to generate a stabilized catalyst support; and e) applying a catalytic metal or a compound thereof to said stabilized catalyst support to form the catalyst precursor, wherein the catalytic metal comprises a Group 8 metal, Group 9 metal, Group 10 metal, or combinations thereof.

No. of Pages : 93 No. of Claims : 37

(12) PATENT APPLICATION PUBLICATION
(21) Application No.2789/DELNP/2012 A
(19) INDIA
(22) Date of filing of Application :02/04/2012
(43) Publication Date : 24/07/2015

(54) Title of the invention : A METHOD FOR MAKING A CATALYST PRECURSOR

(51) International classification :B01J 21/04
(31) Priority Document No :11/114,804
(32) Priority Date :26/04/2005
(33) Name of priority country :U.S.A.
(86) International Application No :PCT/US06/011021
Filing Date :27/03/2006
(87) International Publication No :WO 2006/115668
(61) Patent of Addition to Application Number :NA
Filing Date :NA
(62) Divisional to Application Number :7013/DELNP/2007
Filed on :11/09/2007

(71)**Name of Applicant :**
1)SUD-CHEMIE INC.,
Address of Applicant :1600 WEST HILL STREET, LOUISVILLE, KENTUCKY 40210 USA
(72)**Name of Inventor :**
1)RAFAEL L. ESPINOZA,
2)KANDASWAMY JOTHIMURUGESAN,
3)YAMING JIN,
4)DALE J. ORTEGO, JR.,
5)KRISTI A. FJARE,
6)BEATRICE C. ORTEGO,

(57) Abstract :
The present invention relates to a method for making a catalyst precursor with enhanced hydrothermal stability, comprising: providing a material comprising a crystalline hydrous alumina precursor, wherein the crystalline hydrous alumina precursor comprises at least one crystalline boehmite having an average crystallite size selected from an optimum range from about 4 nm to about 30 nm, or comprises at least one crystalline bayerite; contacting the material with at least one structural stabilizer or a compound thereof; shaping the contacted material in the presence of the compound of the at least one structural stabilizer so as to form a shaped alumina precursor material in the form of particles of a desired average particle size, wherein the shaped alumina precursor material comprises the crystalline hydrous alumina precursor and the at least one structural stabilizer or compound thereof; calcining the shaped alumina precursor material under suitable calcination conditions to effect the conversion of the crystalline hydrous alumina precursor to a stabilized aluminum oxide structure and to generate a stabilized catalyst support; and applying a catalytic metal or a compound thereof to said stabilized catalyst support to form a catalyst precursor, wherein the catalytic metal comprises a Group 8 metal, a Group 9 metal, a Group 10 metal, or combinations thereof.

No. of Pages : 91 No. of Claims : 26

(12) PATENT APPLICATION PUBLICATION
(21) Application No.2871/DELNP/2012 A
(19) INDIA
(22) Date of filing of Application :03/04/2012
(43) Publication Date : 24/07/2015

(54) Title of the invention : HETEROBICYCLE-SUBSTITUTED AZOLYL BENZENE FUNGICIDES

(51) International classification :C07D 405/04
(31) Priority Document No :61/255,996
(32) Priority Date :29/10/2009
(33) Name of priority country :U.S.A.
(86) International Application No :PCT/US2010/052228
Filing Date :12/10/2010
(87) International Publication No :WO 2011/059619
(61) Patent of Addition to Application Number :NA
Filing Date :NA
(62) Divisional to Application Number :NA
Filing Date :NA

(71)**Name of Applicant :**
1)E. I. DU PONT DE NEMOURS AND COMPANY
Address of Applicant :1007 MARKET STREET, WILMINGTON, DELAWARE 19898, USA. .
(72)**Name of Inventor :**
1)ANDREASSI II JOHN LAWRENCE
2)TAGGI ANDREW EDMUND

(57) Abstract :
Disclosed are compounds of Formula 1, including all stereoisomers, N oxides, and salts thereof, wherein Y is a 5-membered, fully or partially unsaturated heterocyclic ring containing 2-4 carbon atoms and 2-3 nitrogen atoms as ring members, the ring substituted with Z on a ring member atom connected through an adjacent single ring member atom to the ring member atom attaching the heterocyclic ring to the phenyl ring of Formula 1, and optionally further substituted with up to 2 substituents independently selected from R5 on carbon atom ring members and from R6 on nitrogen atom ring members; Z is an 8-, 9-, 10- or 11-membered fused heterobicyclic ring system containing ring members selected from carbon atoms and 1 to 4 heteroatoms independently selected from up to 2 O, up to 2 S and up to 4 N atoms, wherein up to 3 carbon atom ring members are independently selected from C(=O) and C(=S), and the sulfur atom ring members are independently selected from S(=O)u(=NR7)z, the ring system optionally substituted with substituents independently selected from R8 on carbon atom ring members and from R9 on nitrogen atom ring members; and R1, R2, R3, R4, R5, R6, R7, R8, R9, u and z are as defined in the disclosure. Also disclosed are compositions containing the compounds of Formula 1 and methods for controlling plant disease caused by a fungal pathogen comprising applying an effective amount of a compound or a composition of the invention.

No. of Pages : 104 No. of Claims : 9

(12) PATENT APPLICATION PUBLICATION
(19) INDIA
(22) Date of filing of Application :03/04/2012
(21) Application No.1038/DEL/2012 A
(43) Publication Date : 24/07/2015

(54) Title of the invention : COAL WATER SLURRY AND METHODS FOR MAKING THE COAL WATER SLURRY

(51) International classification :C07C
(31) Priority Document No :201110085720.9
(32) Priority Date :07/04/2011
(33) Name of priority country :China
(86) International Application No :NA
Filing Date :NA
(87) International Publication No :NA
(61) Patent of Addition to Application Number :NA
Filing Date :NA
(62) Divisional to Application Number :NA
Filing Date :NA

(71)**Name of Applicant :**
1)GENERAL ELECTRIC COMPANY
Address of Applicant :1 RIVER ROAD, SCHENECTADY, NEW YORK 12345, USA
(72)**Name of Inventor :**
1)WANG, MINGMIN
2)XUE, JUNLI
3)WANG, DEJIA
4)LI, SHIGUANG
5)HU, LISHUN
6)BI, XIJING
7)LI, WENHUA
8)CHEN, WEI

(57) Abstract :
A coal water slurry comprises smaller and larger coal particles. The smaller coal particles are in a range of from about 20wt% to about 90wt% of the coal in the coal water slurry and comprise a mean particle size smaller than 25µm. The larger coal particles are in a range of from about 10wt% to about 80wt% of the coal in the coal water slurry and comprise a mean particle size in a range of from 50µm to 200µm. A method for making a coal water slurry is also presented.

No. of Pages : 20 No. of Claims : 24

(12) PATENT APPLICATION PUBLICATION
(21) Application No.1894/DELNP/2012 A
(19) INDIA
(22) Date of filing of Application :02/03/2012
(43) Publication Date : 24/07/2015

(54) Title of the invention : COMMUNICATION SYSTEM, COMMUNICATION APPARATUS, COMMUNICATION METHOD, AND COMPUTER PROGRAM

(51) International classification :G06F 21/00
(31) Priority Document No :2009-208688
(32) Priority Date :09/09/2009
(33) Name of priority country :Japan
(86) International Application No :PCT/JP2010/061234
Filing Date :01/07/2010
(87) International Publication No :WO 2011/030605
(61) Patent of Addition to Application Number :NA
Filing Date :NA
(62) Divisional to Application Number :NA
Filing Date :NA

(71)**Name of Applicant :**
1)SONY CORPORATION
Address of Applicant :1-7-1 KONAN, MINATO-KU, TOKYO 1080075, JAPAN
(72)**Name of Inventor :**
1)TOSHIHARU FUKUI
2)TERUHIKO KORI
3)TAKEHIKO NAKANO
4)ATSUKO OGASAWARA

(57) Abstract :
To securely transmit content through remote access via an external network, such as a WAN, while exceeding restrictions of an RTT and a TTL. A way of handling a flag for controlling remote access of content is explicitly defined, and an authentication method is explicitly defined when a content using device performs remote access. Thus, also in remote access, similarly to access of the related art in a household, a copyright protection environment of content based on the DTCP-IP is constructed.

No. of Pages : 99 No. of Claims : 28

(12) PATENT APPLICATION PUBLICATION
(19) INDIA
(22) Date of filing of Application :02/03/2012
(21) Application No.1895/DELNP/2012 A
(43) Publication Date : 24/07/2015

(54) Title of the invention : FORWARDING FRAMES IN A COMMUNICATIONS NETWORK

(51) International classification :G10L 19/14
(31) Priority Document No :200694
(32) Priority Date :02/09/2009
(33) Name of priority country :Israel
(86) International Application No :PCT/IL2010/000608
Filing Date :29/07/2010
(87) International Publication No :WO 2011/027340
(61) Patent of Addition to Application Number :NA
Filing Date :NA
(62) Divisional to Application Number :NA
Filing Date :NA

(71)**Name of Applicant :**
1)DIALOGIC NETWORKS (ISRAEL) LTD.
Address of Applicant :43 HASIVIM STREET, 49517 PETACH TIKVA, ISRAEL
(72)**Name of Inventor :**
1)DAVID MATAS
2)GIL LEVY
3)AMIR ILAN

(57) Abstract :
A method and device are pro¬vided for conveying an encoded signal along a communication path in a packet switched net¬work. The method comprising the steps of: providing a plurality of encoded communica¬tion frames belonging to the encoded signal; retrieving one or more parameters associated with at least one of the plurality of encoded communication frames; and for at least one en¬coded communication frame that is to be dis¬carded, forwarding information associated with that at least one communication frame towards its destination and discarding that frame, and wherein the forwarded information relates to the retrieved one or more parameters.

No. of Pages : 25 No. of Claims : 11

(12) PATENT APPLICATION PUBLICATION
(21) Application No.2553/DELNP/2010 A
(19) INDIA
(22) Date of filing of Application :13/04/2010
(43) Publication Date : 24/07/2015

(54) Title of the invention : COMPOSITIONS FOR ELICITING AN IMMUNE RESPONSE AGAINST MYCOBACTERIUM AVIUM SUBSPECIES PARATUBERCULOSIS

(51) International classification	:C07K14/00, A61K38/16
(31) Priority Document No	:60/979,822
(32) Priority Date	:13/10/2007
(33) Name of priority country	:U.S.A.
(86) International Application No	:PCT/US2008/079425
Filing Date	:09/10/2008
(87) International Publication No	: NA
(61) Patent of Addition to Application Number	:NA
Filing Date	:NA
(62) Divisional to Application Number	:NA
Filing Date	:NA

(71)**Name of Applicant :**
1)CORNELL UNIVERSITY
Address of Applicant :395 Pine Tree Road Suite 310 Ithaca NY 14850 USA. .
(72)**Name of Inventor :**
1)CHANG Yung-Fu

(57) Abstract :
Provided are compositions and methods for stimulating an immune response against Mycobacterium avium subspecies paratuberculosis (MAP). The compositions include a recombinant polypeptide that contains from its N-terminus to C-terminus a C-terminal fragment of MAP protein Map3527, a Map1519 protein amino acid sequence, followed by an N-terminal portion of Map3527. The method comprises administering the composition to an animal in an amount effective to stimulate an immunological response against MAP bacteria. The method is of benefit to any animal susceptible to MAP infection, but is particularly beneficial for ruminants.

No. of Pages : 69 No. of Claims : 20

(12) PATENT APPLICATION PUBLICATION
(19) INDIA
(22) Date of filing of Application :03/04/2012
(21) Application No.2861/DELNP/2012 A
(43) Publication Date : 24/07/2015

(54) Title of the invention : FORMULATION FOR HIGH AND RHIGH-1 COMBINATION

(51) International classification :A61K 9/19
(31) Priority Document No :61/261,859
(32) Priority Date :17/11/2009
(33) Name of priority country :U.S.A.
(86) International Application No :PCT/EP2010/006996
Filing Date :17/11/2010
(87) International Publication No :WO 2011/060922
(61) Patent of Addition to Application Number :NA
Filing Date :NA
(62) Divisional to Application Number :NA
Filing Date :NA

(71)**Name of Applicant :**
1)IPSEN PHARMA S.A.S.
Address of Applicant :65, QUAL GEORGES GORSE, F-92100 BOULOGNE-BILLANCOURT, FRANCE
(72)**Name of Inventor :**
1)GOPINATH, ENONA
2)PARK, SUSAN
3)ARAKAWA, TSUTOMU
4)RICHARD, JOEL
5)FAIS, FABIO

(57) Abstract :
The present invention relates to pharmaceutical compositions. More particularly, the invention relates to formulations of growth hormone (GH) and insulin-like growth factor (IGF-1) combination compositions which provide stable pharmaceutical compositions without aggregation formation at a desirable pH, and to processes of preparation thereof.

No. of Pages : 43 No. of Claims : 24

(12) PATENT APPLICATION PUBLICATION
(21) Application No.2862/DELNP/2012 A
(19) INDIA
(22) Date of filing of Application :03/04/2012
(43) Publication Date : 24/07/2015

(54) Title of the invention : CONCIERGE REGISTRY AUTHENTICATION SERVICE

(51) International classification :H04N
(31) Priority Document No :12/613,784
(32) Priority Date :06/11/2009
(33) Name of priority country :U.S.A.
(86) International Application No :PCT/US2010/043005
Filing Date :23/07/2010
(87) International Publication No :WO 2011/056272
(61) Patent of Addition to Application Number :NA
Filing Date :NA
(62) Divisional to Application Number :NA
Filing Date :NA

(71)**Name of Applicant :**
1)CISCO TECHNOLOGY, INC.
Address of Applicant :170 WEST TASMAN DRIVE SAN JOSE, CALIFORNIA 95134-1706, US U.S.A.
(72)**Name of Inventor :**
1)KRISCHER, MARK
2)BURNS, JAMES EDWARD
3)CAM-WINGET, NANCY
4)TORRES, ESTEBAN RAUL

(57) Abstract :
In an example embodiment described herein is an apparatus comprising a transceiver configured to send and receive data, and logic coupled to the transceiver. The logic is configured to determine from a beacon received by the wireless transceiver whether an associated wireless device sending the beacon supports a protocol for advertising available services from the associated wireless device. The logic is configured to send a request for available services from the associated wireless device via the wireless transceiver responsive to determining the associated wireless device supports the protocol. The logic is configured to receive a response to the request via the wireless transceiver, the response comprising a signature. The logic is configured to validate the response by confirming the signature comprises network data cryptographically bound with service data.

No. of Pages : 26 No. of Claims : 20

(12) PATENT APPLICATION PUBLICATION
(21) Application No.2786/DELNP/2012 A
(19) INDIA
(22) Date of filing of Application :02/04/2012
(43) Publication Date : 24/07/2015

(54) Title of the invention : SYSTEM AND METHOD FOR ACQUIRING AND PROCESSING MYOELECTRIC SIGNALS IN ORDER TO CONTROL A PROSTHETIC ARM

(51) International classification :A61F 2/72
(31) Priority Document No :NA
(32) Priority Date :NA
(33) Name of priority country :NA
(86) International Application No :PCT/MX2009/000093
Filing Date :02/09/2009
(87) International Publication No :WO 2011/028027
(61) Patent of Addition to Application Number :NA
Filing Date :NA
(62) Divisional to Application Number :NA
Filing Date :NA

(71)**Name of Applicant :**
1)BRAVO CASTILLO, LUIS ARMANDO
Address of Applicant :IGNACIO ZARAGOZA NO. 15, COL. SAN FELIPE IXTACALA, 54160 TLALNEPANTLA, MEXICO
(72)**Name of Inventor :**
1)BRAVO CASTILLO, LUIS ARMANDO

(57) Abstract :
The invention relates to a system for acquiring and processing myoelectric signals in order to control a prosthetic arm, comprising: a pair of electrodes positioned in a muscle in the residual limb of an arm that has been amputated in order to detect myoelectric signals; an electrode positioned at a distance from said pair of electrodes, which acts as an earth system; a myoelectric signal conditioning means; and a prosthesis controlling and processing means which receives conditioned signals from the conditioning means. According to the invention, the prosthesis controlling and processing means includes: a comparison means for comparing a muscle contraction time and a muscle contraction voltage with a threshold time and a threshold voltage, respectively; and an activation means for activating at least one motor which produces a predetermined movement of the prosthesis in response to an activation signal transmitted from the aforementioned comparison means. The electrodes provide the myoelectric signal for activating different movements of the prosthesis, without the electrodes having to be changed to another muscle.

No. of Pages : 23 No. of Claims : 19

(12) PATENT APPLICATION PUBLICATION
(21) Application No.2787/DELNP/2012 A
(19) INDIA
(22) Date of filing of Application :02/04/2012
(43) Publication Date : 24/07/2015

(54) Title of the invention : TOWER BARREL, WIND TOWER AND WIND POWER PLANT FOR WIND ELECTRIC POWER GENERATION

(51) International classification :F03B
(31) Priority Document No :200910236600
(32) Priority Date :27/10/2009
(33) Name of priority country :China
(86) International Application No :PCT/CN2010/001690
Filing Date :25/10/2010
(87) International Publication No :NA
(61) Patent of Addition to Application Number :NA
Filing Date :NA
(62) Divisional to Application Number :NA
Filing Date :NA

(71)**Name of Applicant :**
1)SINOVEL WIND GROUP CO., LTD.
Address of Applicant :19F, CULTURE BUILDING, NO. 59, ZHONGGUANCUN STREET, HAIDIAN DISTRICT, BEIJING 100872, CHINA
(72)**Name of Inventor :**
1)LU, JIZHUANG
2)ZHANG, QIN
3)CHEN, FANG
4)HE, HUIMIN

(57) Abstract :
A tower barrel for wind electric power generation includes a barrel wall (11) for supporting a wind generator set, a torsion cable direction-changing means (12) which is placed in the tower barrel and fixed on the barrel wall for holding the cable (16) from the wind generator set and restraining the torsion of the cable, and a cable clamp (15) which is placed under the torsion cable direction-changing means and connects to the barrel wall for securing the cable. The torsion cable direction-changing means includes a beam and two supports for the beam, the supports are fixed on the barrel wall. The torsion cable direction-changing means in the tower barrel improves the safety of the cable, and so improves the safety of the wind generator set.

No. of Pages : 17 No. of Claims : 11

(12) PATENT APPLICATION PUBLICATION
(21) Application No.2869/DELNP/2012 A
(19) INDIA
(22) Date of filing of Application :03/04/2012
(43) Publication Date : 24/07/2015

(54) Title of the invention : HUMANIZED ANTIBODIES SPECIFIC FOR HSP65-DERIVED PEPTIDE-6 METHODS AND USES THEREOF

(51) International classification :A61K 39/00
(31) Priority Document No :61/240,218
(32) Priority Date :06/09/2009
(33) Name of priority country :U.S.A.
(86) International Application No :PCT/IL2010/000731
Filing Date :06/09/2010
(87) International Publication No :WO 2011/027349
(61) Patent of Addition to Application Number :NA
Filing Date :NA
(62) Divisional to Application Number :NA
Filing Date :NA

(71)**Name of Applicant :**
1)PROTAB LTD.
Address of Applicant :P.O.B. 12000, JERUSALEM, 91120, ISRAEL
(72)**Name of Inventor :**
1)NAPARSTEK, YAAKOV
2)YAIR, SHIRA

(57) Abstract :
The present invention relates to humanized antibodies that specifically bind a polypeptide comprising peptide-6 as denoted by SEQ ID NO. 15, that is an HSP65 derived peptide. More specifically, the invention relates to humanized anti-peptide-6 antibodies, compositions, methods and uses thereof for the treatment of immune-related disorders, specifically, inflammatory disorders such as arthritis, IBD, psoriasis, diabetes and MS. The invention futher provides combined compositions and kit combining the humanized antibodies of the invention and at least one anti-inflammatory agent, as well as uses of the humanized antibodies in diagnostic kits and methods.

No. of Pages : 237 No. of Claims : 29

(12) PATENT APPLICATION PUBLICATION
(19) INDIA
(22) Date of filing of Application :03/04/2012
(21) Application No.2870/DELNP/2012 A
(43) Publication Date : 24/07/2015

(54) Title of the invention : METHOD AND SYSTEM FOR DEPOSITION OF PATTERENED ORGANIC THIN FILMS

(51) International classification :C23C 14/12
(31) Priority Document No :61/240,638
(32) Priority Date :08/09/2009
(33) Name of priority country :U.S.A.
(86) International Application No :PCT/US2010/047780
Filing Date :03/09/2010
(87) International Publication No :WO 2011/031631
(61) Patent of Addition to Application Number :NA
Filing Date :NA
(62) Divisional to Application Number :NA
Filing Date :NA

(71)**Name of Applicant :**
1)UNIVERSAL DISPLAY CORPORATION
Address of Applicant :375 PHILLIPS BLVD. EWING, NEW JERSEY 08618, U.S.A.
(72)**Name of Inventor :**
1)BURROWS, PAUL E.
2)SIL VERNAIL, JEFFREY
3)BROWN, JULIE J.

(57) Abstract :
High-throughput OVJP systems and methods are provided that may use multiple flow paths having different conductances to enable deposition with relatively short lag times. A high-throughput OVJP system may include a flow tube having a cross-sectional area much larger than the diameter of one or more apertures through which source material may be expelled during deposition. Use of such a configuration may allow for deposition with reduced lag times.

No. of Pages : 26 No. of Claims : 25

(12) PATENT APPLICATION PUBLICATION
(21) Application No.1996/DELNP/2012 A
(19) INDIA
(22) Date of filing of Application :06/03/2012
(43) Publication Date : 24/07/2015

(54) Title of the invention : DEVICE AND METHOD FOR CONTROLLING AZIMUTH BEAMWIDTH ACROSS A WIDE FREQUENCY RANGE

(51) International classification :H01Q 3/01
(31) Priority Document No :61/237,060
(32) Priority Date :26/08/2009
(33) Name of priority country :U.S.A.
(86) International Application No :PCT/US2010/046835
Filing Date :26/08/2010
(87) International Publication No :WO 2011/028616
(61) Patent of Addition to Application Number :NA
Filing Date :NA
(62) Divisional to Application Number :NA
Filing Date :NA

(71)**Name of Applicant :**
1)AMPHENOL CORPORATION
Address of Applicant :358 HALL AVENUE, WALLINGFORD, CT 06492, U.S.A.
(72)**Name of Inventor :**
1)JIMMY HO
2)SIMON CHRISTOPHER R. MUNDAY
3)CHARANJIT SAILOPAL
4)DAVID HAROLD BOARDMAN
5)BARRY JOHN TALBOT

(57) Abstract :
A system and method for providing a compact azimuth beamwidth in a wide band antenna. The system comprises a first radiating element disposed above a ground plane and one or more parasitic elements disposed proximate to and/or around the first radiating element. Each of the parasitic elements has a slot formed therein that is configured to control beamwidth across a specific frequency range. In one embodiment, the parasitic elements and the slots can be configured to control beamwidth across different frequency ranges. And in another embodiment, another parasitic element is disposed within the slots to control beamwidth across another frequency range.

No. of Pages : 54 No. of Claims : 34

(12) PATENT APPLICATION PUBLICATION
(19) INDIA
(22) Date of filing of Application :02/04/2012
(21) Application No.2798/DELNP/2012 A
(43) Publication Date : 24/07/2015

(54) Title of the invention : COMMUNICATION SHEET STRUCTURE AND INFORMATION MANAGEMENT SYSTEM

(51) International classification :H04B 13/00
(31) Priority Document No :2009-231622
(32) Priority Date :05/10/2009
(33) Name of priority country :Japan
(86) International Application No :PCT/JP2010/067386
Filing Date :04/10/2010
(87) International Publication No :WO 2011/043305
(61) Patent of Addition to Application Number :NA
Filing Date :NA
(62) Divisional to Application Number :NA
Filing Date :NA

(71)**Name of Applicant :**
1)TEIJIN FIBERS LIMITED
Address of Applicant :6-7, MINAMIHOMMACHI 1-CHOME, CHUO-KU, OSAKA-SHI, OSAKA 5410054, JAPAN
(72)**Name of Inventor :**
1)MACHIKO OOUCHIDA
2)SEIJI ITO

(57) Abstract :
To provide a communication sheet structure that is used in combination with an IC tag, has stable read rate and can be easily introduced and installed on an existing shelf, and also an information management system using the same. A communication sheet structure comprises at least three layers of a conductor layer A, a base member layer and a conductor layer B described below, which are laminated in order, wherein the size of the communication sheet structure in the direction of width thereof at right angles with the direction in which the transmitted electromagnetic waves travel in a plane thereof is nearly equal to a natural number of times of one-half the wavelength of the transmitted electromagnetic waves so as to establish a resonating state in the direction of width: conductor layer A: a layer in which continuous, conducting portions A and nonconducting portions A are present, the conducting portions A having an electric resistance of not larger than 1 Ω/□; base member layer: a layer of a resin molded body or a fiber structure having a relative dielectric constant of 1.0 to 5.0 at a frequency of 800 MHz to 10 GHz; conductor layer B: a layer in which a conducting portion B is present over not less than 90% of the area thereof, the conducting portion B having an electric resistance of not larger than 1 Ω/□.

No. of Pages : 43 No. of Claims : 13

(12) PATENT APPLICATION PUBLICATION
(19) INDIA
(22) Date of filing of Application :02/04/2012
(21) Application No.2799/DELNP/2012 A
(43) Publication Date : 24/07/2015

(54) Title of the invention : METHOD AND APPARATUS FOR DYNAMICALLY ADJUSTING VOLUME

(51) International classification :H04N 5/60
(31) Priority Document No :200910188806.7
(32) Priority Date :10/12/2009
(33) Name of priority country :China
(86) International Application No :PCT/CN2010/073418
Filing Date :01/06/2010
(87) International Publication No :WO 2011/069357
(61) Patent of Addition to Application Number :NA
Filing Date :NA
(62) Divisional to Application Number :NA
Filing Date :NA

(71)**Name of Applicant :**
1)TENCENT TECHNOLOGY (SHENZHEN) CO., LTD.
Address of Applicant :ROOM 403, EAST BLOCK 2, SEG PARK, ZHENXING ROAD, FUTIAN DISTRICT, SHENZHEN CITY, GUANGDONG PROVINCE, PRC, CHINA
(72)**Name of Inventor :**
1)HUANDE ZHENG

(57) Abstract :
A method for dynamically adjusting volume is disclosed, which includes: determining dynamic adjustment step size I of output volume according to the preset time interval T of fading volume, the preset frequency F of fading volume, and the difference between the preset output volume V2 and the present output volume V1, and determining dynamic adjustment mode based on the step size I; determining the dynamic adjustment period of the present output volume in terms of the preset frequency F of fading volume; dynamically adjusting the present output volume to the preset the output volume V2 according to dynamic adjustment step size I and the dynamic adjustment mode when every dynamic adjustment period arrives. Correspondingly, an apparatus for dynamically adjusting volume is also disclosed. The invention enables the fade effect of the output volume during playing, pausing, stopping or dragging music etc. and the smooth effect of the volume transition during switching music or adjusting volume, making the music play smoother and mellower.

No. of Pages : 22 No. of Claims : 8

(12) PATENT APPLICATION PUBLICATION
(19) INDIA
(22) Date of filing of Application :03/04/2012
(21) Application No.2883/DELNP/2012 A
(43) Publication Date : 24/07/2015

(54) Title of the invention : METHOD AND ARRANGEMENT IN A TELECOMMUNICATION SYSTEM FOR ESTIMATING FREQUENCY DEPENDENT RESISTANCE

(51) International classification :H04B 3/48
(31) Priority Document No :61/256,415
(32) Priority Date :30/10/2009
(33) Name of priority country :U.S.A.
(86) International Application No :PCT/EP2009/067733
Filing Date :22/12/2009
(87) International Publication No :WO 2011/050863
(61) Patent of Addition to Application Number :NA
Filing Date :NA
(62) Divisional to Application Number :NA
Filing Date :NA

(71)**Name of Applicant :**
1)TELEFONAKTIEBOLAGET LM ERICSSON (PUBL)
Address of Applicant :SE-164 83 STOCKHOLM (SE) Sweden
(72)**Name of Inventor :**
1)BERG, MIGUEL
2)BORJESSON, PER OLA
3)CEDERHOLM, DANIEL

(57) Abstract :
Method and arrangement in a telecommunication system for estimating frequency dependent resistance of a transmission line. Insertion loss per length unit of the transmission line at a first frequency is determined. Thereupon a first resistance per length unit based on the determined insertion loss per length unit of the transmission line is calculated. Effective resistance per length unit at a second frequency based on the calculated first resistance is calculated. The calculated effective resistance could be used when estimating the insertion loss for the second frequency and all frequencies of interest.

No. of Pages : 46 No. of Claims : 38

(12) PATENT APPLICATION PUBLICATION
(19) INDIA
(22) Date of filing of Application :19/07/2014
(21) Application No.2046/DEL/2014 A
(43) Publication Date : 24/07/2015

(54) Title of the invention : METHOD AND SYSTEM FOR MIGRATING DATA BETWEEN SYSTEMS WITHOUT DOWNTIME

(51) International classification :G06F3/06
(31) Priority Document No :61/856,404
(32) Priority Date :19/07/2013
(33) Name of priority country :U.S.A.
(86) International Application No :NA
Filing Date :NA
(87) International Publication No : NA
(61) Patent of Addition to Application Number :NA
Filing Date :NA
(62) Divisional to Application Number :NA
Filing Date :NA

(71)**Name of Applicant :**
1)Sears Brands, LLC
Address of Applicant :3333 Beverly Road, Hoffman Estates, Illinois 60179, USA
(72)**Name of Inventor :**
1)ZACHRISEN, Espen
2)AFEEF, Tariq
3)VENKATACHALAM, Ganesh
4)HEGDE, Vinayak Subray

(57) Abstract :
Methods and systems are provided for migrating data between systems without downtime. Data migration may be performed by selecting one or more data records for migration from a first record system to a second record system, and copying the one or more data records from the first record system to the second record system in manner where the data record remains accessible and available during the migration. The migrating may comprise verifying each copied data record, and when the data record is successfully verified, marking it as available on the second record system, and updating user interaction related functions to use a copy of the data record in the second record system when handling interactions by a user associated with the data record. User interactions may be handled adaptively during data migration by verifying the availability of data records in the first record system and the second record system.

No. of Pages : 31 No. of Claims : 20

(12) PATENT APPLICATION PUBLICATION
(19) INDIA
(22) Date of filing of Application :02/04/2012
(21) Application No.2795/DELNP/2012 A
(43) Publication Date : 24/07/2015

(54) Title of the invention : METHOD AND DEVICE FOR FEEDING INTO A SMELTING UNIT

(51) International classification :F27D 3/00
(31) Priority Document No :A1636/2009
(32) Priority Date :16/10/2009
(33) Name of priority country :Austria
(86) International Application No :PCT/EP2010/064867
Filing Date :06/10/2010
(87) International Publication No :WO 2011/045212
(61) Patent of Addition to Application Number :NA
Filing Date :NA
(62) Divisional to Application Number :NA
Filing Date :NA

(71)**Name of Applicant :**
1)SIEMENS VAI METALS TECHNOLOGIES GMBH
Address of Applicant :TURMSTRASSE 44, 4031 LINZ, AUSTRIA
(72)**Name of Inventor :**
1)THOMAS EDER
2)ROBERT MILLNER
3)JAN-FRIEDEMANN PLAUL
4)NORBERT REIN
5)ANDREAS SCHERNEY
6)KARL ZEHETBAUER

(57) Abstract :
The present invention relates to a process and to a device for charging a primary product for pig iron into a smelting unit. Said process and device are characterized in that some of the primary product which has been formed by reducing oxidic iron carriers is stored in the hot state in a reservoir tank before being supplied into the storage device (11) or charging device which is directly connected to the smelting unit.

No. of Pages : 21 No. of Claims : 19

(12) PATENT APPLICATION PUBLICATION
(21) Application No.2796/DELNP/2012 A
(19) INDIA
(22) Date of filing of Application :02/04/2012
(43) Publication Date : 24/07/2015

(54) Title of the invention : WORKPIECE POSITIONING DEVICE AND METHOD, AND AWORKPIECE POSITIONING DEVICE FOR BUTT WELDING

(51) International classification	:B23K 37/04
(31) Priority Document No	:NA
(32) Priority Date	:NA
(33) Name of priority country	:NA
(86) International Application No	:PCT/JP2009/067655
Filing Date	:09/10/2009
(87) International Publication No	:WO 2011/042988
(61) Patent of Addition to Application Number	:NA
Filing Date	:NA
(62) Divisional to Application Number	:NA
Filing Date	:NA

(71)**Name of Applicant :**
1)IHI CORPORATION
Address of Applicant :1-1, TOYOSU 3-CHOME, KOTO-KU, TOKYO 135-8710, JAPAN
(72)**Name of Inventor :**
1)JUN MAENO
2)NISHIMI AKIHIRO
3)IIMURA KENJI

(57) Abstract :
There are provided a support member (86) having a sucking section (88) that sucks workpiece (A); an operating member (50) that supports the support member so that the support member is pivotable around an axis perpendicular to a plate surface of the workpiece and can displace the support member in a direction parallel to the plate surface of the workpiece and perpendicular to the edge of the workpiece; and a controller (48) that displaces the workpiece by activating the operating member so that the edge of the workpiece comes into contact with the stopper due to pressing force.

No. of Pages : 33 No. of Claims : 11

(12) PATENT APPLICATION PUBLICATION
(19) INDIA
(22) Date of filing of Application :02/04/2012
(21) Application No.2797/DELNP/2012 A
(43) Publication Date : 24/07/2015

(54) Title of the invention : GATE VALVE

(51) International classification :F16K 13/10
(31) Priority Document No :2009-235040
(32) Priority Date :09/10/2009
(33) Name of priority country :Japan
(86) International Application No :PCT/JP2010/067750
Filing Date :08/10/2010
(87) International Publication No :WO 2011/043463
(61) Patent of Addition to Application Number :NA
Filing Date :NA
(62) Divisional to Application Number :NA
Filing Date :NA

(71)**Name of Applicant :**
1)NIPPON STEEL & SUMITOMO METAL CORPORATION
Address of Applicant :6-1, MARUNOUCHI 2-CHOME, CHIYODA-KU, TOKYO 100-8071, JAPAN
(72)**Name of Inventor :**
1)NOBUAKI ITO
2)KIMIHITO SUZUKI
3)KENICHIRO FUJIMOTO

(57) Abstract :
A gate valve for the inside of a high-temperature furnace includes: a granular sealant that is made to flow in a temperature range from room temperature to 900°C; a valve casing wherein the sealant is stored at a bottom portion thereof; a first duct which is connected to the valve casing and through which a gas flows in from the outside toward the inside of the valve casing; a second duct which is connected to the valve casing and through which the gas flows out from the inside toward the outside of the valve casing; and a valve body which lowers down to a valve body lowering position where the valve body is at least partially buried in the sealant and blocks the flow of the gas from the first duct toward the second duct, and rises to a valve body rising position where the valve body is arranged above the surface of the sealant and allows the gas to flow in from the first duct toward the second duct.

No. of Pages : 51 No. of Claims : 8

(12) PATENT APPLICATION PUBLICATION
(19) INDIA
(22) Date of filing of Application :03/04/2012
(21) Application No.2880/DELNP/2012 A
(43) Publication Date : 24/07/2015

(54) Title of the invention : CENTRIFUGAL CEILING FAN

(51) International classification :F04D 25/08
(31) Priority Document No :61/257,594
(32) Priority Date :03/11/2009
(33) Name of priority country :U.S.A.
(86) International Application No :PCT/CA2010/001748
Filing Date :01/11/2010
(87) International Publication No :WO 2011/054093
(61) Patent of Addition to Application Number :NA
Filing Date :NA
(62) Divisional to Application Number :NA
Filing Date :NA

(71)**Name of Applicant :**
1)SECTAR SOLUTIONS INC.
Address of Applicant :8400 PONTMAIN, MONTREAL, QUEBEC H1R 2R7, CANADA
(72)**Name of Inventor :**
1)SECCARECCIA, ALESSANDRO

(57) Abstract :
The present document describes a centrifugal ceiling fan. The fan comprises a casing, a motor and a centrifugal propeller. The casing comprises an upper surface comprising an air inlet and a lower surface comprising an air outlet. In an embodiment, the lower surface has a round bowl-like shape including a plurality of openings defining the air outlet. The propeller comprises a shaft and a plurality of blades provided around the shaft. The blades may be curved to push the air in all directions between a first direction substantially perpendicular to the rotation shaft and a second direction substantially parallel to the rotation shaft in order to evenly ventilate the room. The fan may include a heating element for heating the air as it exits from the fan.

No. of Pages : 26 No. of Claims : 31

(12) PATENT APPLICATION PUBLICATION
(21) Application No.2791/DELNP/2012 A
(19) INDIA
(22) Date of filing of Application :02/04/2012
(43) Publication Date : 24/07/2015

(54) Title of the invention : POURING NOZZLE AND ASSEMBLY OF SUCH A POURING NOZZLE WITH AN INNER NOZZLE

(51) International classification :B22D 41/22
(31) Priority Document No :09173696.7
(32) Priority Date :21/10/2009
(33) Name of priority country :EUROPEAN UNION
(86) International Application No :PCT/EP2010/006410
Filing Date :20/10/2010
(87) International Publication No :WO 2011/047850
(61) Patent of Addition to Application Number :NA
Filing Date :NA
(62) Divisional to Application Number :NA
Filing Date :NA

(71)**Name of Applicant :**
1)VESUVIUS GROUP S.A.
Address of Applicant :RUE DE DOUVRAIN, 17, B-7011 GHLIN, BELGIUM
(72)**Name of Inventor :**
1)FABRICE SIBIET

(57) Abstract :
The invention relates to a pouring nozzle 30 comprising at its upstream end 32 a generally rectangular shaped plate 34 with a top surface 16 and a bottom surface. The nozzle 30 also comprises a tube 38 the axis 40 of which is substantially orthogonal to the top surface 16 of the plate 34. The tube 38 extends from the bottom surface of the plate 34 to the downstream end 36 of the nozzle. The nozzle comprises a pouring channel consisting of the inlet orifice 18 formed through the surface 16 of plate 34, a bore in the plate 34, a bore 50 in the tube 38; the downstream end 36 of the tube is closed and the pouring channel emerges close to the downstream end 36 through outlets 46, 46 formed in the lateral walls of the tube 38. The orifice of the plate 34, the bores of the plate and of the tube and the outlets being in fluid connection. The outlets 46, 46 are disposed symmetrically on either side of the axis 40 of the tube 38. The centres of the outlets 46, 46 on either side of the axis 40 define an axis 48 of the outlets substantially orthogonal to the axis 40 of the tube 38. The axis of the outlets is substantially parallel to a pair of sides of the plate 34. The orifice 18 is oblong and has a major axis 42 and a minor axis 44. The minor axis 44 of the orifice 18 is parallel to the axis 48 of the outlets. According to another of its objects, the present invention also relates to an assembly of such a nozzle with an inner nozzle. This nozzle as well as its assembly with an inner nozzle are used for the continuous casting of steel from a tundish towards a continuous casting mould.

No. of Pages : 12 No. of Claims : 7

(12) PATENT APPLICATION PUBLICATION
(19) INDIA
(22) Date of filing of Application :03/04/2012
(21) Application No.2874/DELNP/2012 A
(43) Publication Date : 24/07/2015

(54) Title of the invention : ELASTOMERIC DENTAL FLOSS

(51) International classification :A61C 15/04
(31) Priority Document No :61/258,411
(32) Priority Date :05/11/2009
(33) Name of priority country :U.S.A.
(86) International Application No :PCT/US2010/055656
Filing Date :05/11/2010
(87) International Publication No :WO 2011/057095
(61) Patent of Addition to Application Number :NA
Filing Date :NA
(62) Divisional to Application Number :NA
Filing Date :NA

(71)**Name of Applicant :**
1)COLGATE-PALMOLIVE COMPANY
Address of Applicant :300 PARK AVENUE, NEW YORK, NEW YORK 10022 USA. .
(72)**Name of Inventor :**
1)FONTANA JOSE EDER
2)LEMOS EDILBERTO
3)PERNA FERNANDO
4)FOCASSIO PAULO

(57) Abstract :
A composition comprising a blend of polypropylene and an elastomeric block copolymer, and a plasticizer useful as an oral cleaning device. The elastomeric composition may be used as a dental floss.

No. of Pages : 16 No. of Claims : 15

(12) PATENT APPLICATION PUBLICATION
(19) INDIA
(22) Date of filing of Application :03/04/2012
(21) Application No.2875/DELNP/2012 A
(43) Publication Date : 24/07/2015

(54) Title of the invention : MULTI-CHAMBERED CONTAINER

(51) International classification :B65D 35/22
(31) Priority Document No :12/612,391
(32) Priority Date :04/11/2009
(33) Name of priority country :U.S.A.
(86) International Application No :PCT/US2009/063373
Filing Date :05/11/2009
(87) International Publication No :WO 2011/056173
(61) Patent of Addition to Application Number :NA
Filing Date :NA
(62) Divisional to Application Number :NA
Filing Date :NA

(71)**Name of Applicant :**
1)COLGATE-PALMOLIVE COMPANY
Address of Applicant :300 PARK AVENUE, NEW YORK, NEW YORK 10022 USA. .
(72)**Name of Inventor :**
1)GREER LES
2)WORTHINGTON BRIAN
3)CUMMINGS BRUCE

(57) Abstract :
A multi-chambered container for storing and dispensing flowable substances and method for using the same. The container includes a plurality of individual chambers each containing a flowable substance. Each chamber is in fluid communication with a discharge valve assembly. The valve assembly selectively dispenses a single one of the flowable substances in response to one of the chambers being pressed or squeezed by a user without simultaneously dispensing the remaining substances. In preferred embodiments, the container includes at least two, and more preferably three or more chambers.

No. of Pages : 40 No. of Claims : 21

(12) PATENT APPLICATION PUBLICATION
(19) INDIA
(22) Date of filing of Application :03/04/2012
(21) Application No.2876/DELNP/2012 A
(43) Publication Date : 24/07/2015

(54) Title of the invention : MODULATORS OF G PROTEIN-COUPLED RECEPTOR 88

(51) International classification :C07D 333/24
(31) Priority Document No :61/249,465
(32) Priority Date :07/10/2009
(33) Name of priority country :U.S.A.
(86) International Application No :PCT/US2010/051572
Filing Date :06/10/2010
(87) International Publication No :WO 2011/044195
(61) Patent of Addition to Application Number :NA
Filing Date :NA
(62) Divisional to Application Number :NA
Filing Date :NA

(71)**Name of Applicant :**
1)BRISTOL-MYERS SQUIBB COMPANY
Address of Applicant :ROUTE 206 AND PROVINCE LINE ROAD, PRINCETON, NEW JERSEY 08543-4000, USA
2)LEXICON PHARMACEUTICALS INC.
(72)**Name of Inventor :**
1)BI YINGZHI
2)DZIERBA CAROLYN DIANE
3)BRONSON JOANNE J.
4)CARSON KENNETH
5)CIANCHETTA GIOVANNI
6)DONG LI
7)FINK CYNTHIA
8)GREEN MICHAEL
9)KIMBALL DAVID
10)MACOR JOHN E.
11)KWON SOOJIN
12)WANG JIANCHENG
13)ZHANG YULIAN
14)ZIPP GREG

(57) Abstract :
The present disclosure is generally directed to compounds which can modulate G-protein coupled receptor 88, compositions comprising such compounds, and methods for modulating G-protein coupled receptor 88.

No. of Pages : 68 No. of Claims : 24

(12) PATENT APPLICATION PUBLICATION
(19) INDIA
(22) Date of filing of Application :03/04/2012
(21) Application No.2877/DELNP/2012 A
(43) Publication Date : 24/07/2015

(54) Title of the invention : VEHICLE HEAT-EXCHANGE MODULE

(51) International classification :F04D 29/38
(31) Priority Document No :2009-240385
(32) Priority Date :19/10/2009
(33) Name of priority country :Japan
(86) International Application No :PCT/JP2010/065610
Filing Date :10/09/2010
(87) International Publication No :WO 2011//048884
(61) Patent of Addition to Application Number :NA
Filing Date :NA
(62) Divisional to Application Number :NA
Filing Date :NA

(71)**Name of Applicant :**
1)MITSUBISHI HEAVY INDUSTRIES, LTD.
Address of Applicant :16-5, KONAN 2-CHOME, MINATO-KU, TOKYO 108-8215, JAPAN
(72)**Name of Inventor :**
1)TSUYOSHI EGUCHI
2)ATSUSI SUZUKI
3)YOSHINAO KOMATSU
4)SEIJI SATO

(57) Abstract :
In a vehicle heat-exchange module in which a fan unit (4) is provided at the downstream side of a rectangular heat exchanger, and the fan unit (4) is provided with a shroud (5) having a bell-mouth (9) and an annular opening (10), a propeller fan (8) that is disposed in the annular opening (10), and a fan motor that rotationally drives the propeller fan (8), the fan unit (4) is a unit having a single-fan configuration in which motor input power is at a predetermined level or less, and the propeller fan (8) is provided with two sets of winglets (26 and 27) that are respectively constructed upright, with a prescribed gap therebetween in the radial direction, along the circumferential direction on both a pressure surface and a suction surface of the root side of the blades (16).

No. of Pages : 30 No. of Claims : 7

(12) PATENT APPLICATION PUBLICATION
(19) INDIA
(22) Date of filing of Application :02/04/2012
(21) Application No.2800/DELNP/2012 A
(43) Publication Date : 24/07/2015

(54) Title of the invention : NANOMOLECULAR SOLID STATE ELECTRODYNAMIC THRUSTER

(51) International classification :F23R 3/42
(31) Priority Document No :61/239,446
(32) Priority Date :03/09/2009
(33) Name of priority country :U.S.A.
(86) International Application No :PCT/US2010/002428
Filing Date :03/09/2010
(87) International Publication No :WO 2011/028287
(61) Patent of Addition to Application Number :NA
Filing Date :NA
(62) Divisional to Application Number :NA
Filing Date :NA

(71)**Name of Applicant :**
1)GAME CHANGERS, LLC
Address of Applicant :41 EAST 31ST STREET, NEW YORK, NEW YORK 10016, U.S.A.
(72)**Name of Inventor :**
1)JASON SANCHEZ
2)PIOTR A. GARBUZ

(57) Abstract :
A solid-state device that is capable of imparting a directional momentum via thermoelectric microelements. High surface area is used to enhance the efficiency of heat transfer. The device can be operated in adiabatic mode in order to minimize thermal emissions.

No. of Pages : 46 No. of Claims : 21

(12) PATENT APPLICATION PUBLICATION
(21) Application No.2886/DELNP/2012 A
(19) INDIA
(22) Date of filing of Application :03/04/2012
(43) Publication Date : 24/07/2015

(54) Title of the invention : COORDINATE MEASURING DEVICE HAVING POSITIONAL CHANGE SENSORS •

(51) International classification :G06C
(31) Priority Document No :10 2009 049 534.7
(32) Priority Date :06/10/2009
(33) Name of priority country :Germany
(86) International Application No :PCT/EP2010/064869
Filing Date :06/10/2010
(87) International Publication No : NA
(61) Patent of Addition to Application Number :NA
Filing Date :NA
(62) Divisional to Application Number :NA
Filing Date :NA

(71)**Name of Applicant :**
1)CARL ZEISS INDUSTRIELLE MESSTECHNIK GMBH
Address of Applicant :Carl-Zeiss-Strasse 22 73447 Oberkochen GERMANY
(72)**Name of Inventor :**
1)ENGEL Thomas

(57) Abstract :
According to a first aspect, the present invention relates to a coordinate measuring machine (12) having a sensor (36) for measuring an object (40), and having a housing structure (28, 42, 44, 46, 48) for holding and positioning the sensor (36, 37), wherein a position change sensor (54, 56, 58, 60, 72, 74) is provided in order to detect a change in position of the sensor (36, 37) and of the housing structure (28, 42, 44, 46, 48). According to a second aspect, the invention relates to a method (80) for collision detection of a coordinate measuring machine (12). According to a third aspect, the invention relates to a method (96) for correcting data of a sensor (37), measuring in a contactless fashion, in particular an optical sensor (37), of a coordinate measuring machine (12). The method according to the second and the third aspects can be executed on a coordinate measuring machine according to the first aspect.

No. of Pages : 33 No. of Claims : 10

(12) PATENT APPLICATION PUBLICATION
(21) Application No.2887/DELNP/2012 A
(19) INDIA
(22) Date of filing of Application :03/04/2012
(43) Publication Date : 24/07/2015

(54) Title of the invention : METHOD AND SYSTEM FOR SENDING AND TRANSMITTING MBMS PAGING INDICATION SIGNALING

(51) International classification :H04N
(31) Priority Document No :200910178915.0
(32) Priority Date :29/09/2009
(33) Name of priority country :China
(86) International Application No :PCT/CN2010/071789
Filing Date :15/04/2010
(87) International Publication No : NA
(61) Patent of Addition to Application Number :NA
Filing Date :NA
(62) Divisional to Application Number :NA
Filing Date :NA

(71)**Name of Applicant :**
1)ZTE CORPORATION
Address of Applicant :ZTE Plaza Keji Road South Hi-Tech Industrial Park Nanshan Shenzhen Guangdong 518057 CHINA
(72)**Name of Inventor :**
1)MAO Lei;
2)MA Zijiang;
3)AI Jianxun;

(57) Abstract :
A method and system for sending and transmitting a Multimedia Broadcast Multicast Service (MBMS) paging indicating signaling are disclosed. A network side assigns bit resource which bearing an Multipoint Control Channel (MCCH) modification indication for each MCCH according to the available resource of paging indicating signaling and the maximum number of MCCHs supported by a cell, and configures mapping information of each MCCH modification indication on the paging indicating signaling; the network side makes the MCCH modification indication corresponding to the configured MCCH included in the paging indicating signaling before transmitting the paging indicating signaling. The subject application can be applied to a cell having a plurality of MCCHs and is not suffered from the number change of the MCCHs. The application can be easily carried out. The application can be easily carried out, and the UE determines whether the content of the MCCH has changed only according to the MCCH modification indication corresponding to the MCCH concerned by the UE.

No. of Pages : 24 No. of Claims : 15

(12) PATENT APPLICATION PUBLICATION
(21) Application No.2888/DELNP/2012 A
(19) INDIA
(22) Date of filing of Application :03/04/2012
(43) Publication Date : 24/07/2015

(54) Title of the invention : METHOD DEVICE AND SYSTEM FOR IMPLEMENTING DATA SYNCHRONIZATION BETWEEN SOURCE DATABASE AND TARGET DATABASE

(51) International classification :H04N
(31) Priority Document No :200910236502.3
(32) Priority Date :23/10/2009
(33) Name of priority country :China
(86) International Application No :PCT/CN2010/071725
Filing Date :13/04/2010
(87) International Publication No : NA
(61) Patent of Addition to Application Number :NA
Filing Date :NA
(62) Divisional to Application Number :NA
Filing Date :NA

(71)**Name of Applicant :**
1)ZTE CORPORATION
Address of Applicant :ZTE Plaza Keji Road South Hi-Tech Industrial Park Nanshan Shenzhen Guangdong 518057 CHINA
(72)**Name of Inventor :**
1)DING Qipeng;

(57) Abstract :
The disclosure discloses a method for implementing data synchronization between a source database and a target database, which includes: a synchronization device acquires at least one first Logical Change Record (LCR) and a keyword of the first LCR from the source database; the synchronization device determines whether there is a second LCR with a keyword as same as the keyword of the first LCR in the synchronization device itself; the synchronization device processes the first LCR to generate a processed LCR according to the determination result, so that the synchronization device stores only one LCR containing the keyword of the first LCR; and the synchronization device sends the processed LCR to the target database. Accordingly, the disclosure also discloses a device and system for implementing data synchronization between a source database and a target database. The disclosure can reduce the data transmission load when implementing the synchronization between the source database and the target database.

No. of Pages : 29 No. of Claims : 10

(12) PATENT APPLICATION PUBLICATION
(19) INDIA
(22) Date of filing of Application :20/01/2014
(21) Application No.153/DEL/2014 A
(43) Publication Date : 24/07/2015

(54) Title of the invention : MANUFACTURING OF SYNCHRONIZER RING WITH A COMBINATION OF BRASS AND STEEL

(51) International classification	:C08G, H01R
(31) Priority Document No	:NA
(32) Priority Date	:NA
(33) Name of priority country	:NA
(86) International Application No	:NA
Filing Date	:NA
(87) International Publication No	: NA
(61) Patent of Addition to Application Number	:NA
Filing Date	:NA
(62) Divisional to Application Number	:NA
Filing Date	:NA

(71)**Name of Applicant :**
1)CHANG YUN INDIA LTD
Address of Applicant :77, IDC, MEHARAULI ROAD, GURGAON 122001 Haryana India
(72)**Name of Inventor :**
1)SUDHIR SRIVASTAVA
2)RAJESH DONGARE
3)RAVIT DHAMA
4)SIMANTA ROY

(57) Abstract :
The invention describes the manufacturing process of a single-cone hybrid synchronizer ring made of brass and steel rings combined into one. The inner mating surface is that of brass as in the prior art but the outer layer is that of steel providing adequate structural stability to the innovative product. The synchronizer ring of this invention is at par with the performance and efficiency of the product of prior art and offers considerable cost-savings on account of reduced consumption of brass.

No. of Pages : 28 No. of Claims : 6

(12) PATENT APPLICATION PUBLICATION
(21) Application No.2843/DELNP/2012 A
(19) INDIA
(22) Date of filing of Application :03/04/2012
(43) Publication Date : 24/07/2015

(54) Title of the invention : NICKEL-PLATED STEEL SHEET FOR MANUFACTURING PIPE HAVING CORROSION RESISTANCE AGAINST FUEL VAPORS, PIPE WHICH USES THE STEEL SHEET, AND FUEL SUPPLY PIPE WHICH USES THE STEEL SHEET

(51) International classification :C25D 5/26
(31) Priority Document No :2009-216526
(32) Priority Date :18/09/2009
(33) Name of priority country :Japan
(86) International Application No :PCT/JP2010/005643
Filing Date :15/09/2010
(87) International Publication No :WO 2011/033772
(61) Patent of Addition to Application Number :NA
Filing Date :NA
(62) Divisional to Application Number :NA
Filing Date :NA

(71)**Name of Applicant :**
1)TOYO KOHAN CO., LTD.
Address of Applicant :2-12, YONBAN-CHO, CHIYODA-KU, TOKYO 102-8447, JAPAN
(72)**Name of Inventor :**
1)TATSUO TOMOMORI
2)KOH YOSHIOKA
3)HIDEYUKI MINAGI

(57) Abstract :
Provided is a nickel-plated steel sheet for manufacturing a pipe having corrosion resistance against fuel vapor of fuel such as-gasoline, light oil, bioethanol or bio-diesel fuel, and a pipe and a fuel supply pipe. In the nickel-plated steel sheet for manufacturing a pipe, a nickel plating layer having a plating thickness of 0.5 to 10μm is formed on a surface of a steel sheet thus having corrosion resistance against fuel vapor. In the pipe and the fuel supply pipe, a nickel plating layer having a plating thickness of 0.5 to 10μm is formed on an inner surface of a pipe formed of a steel sheet thus having corrosion resistance against fuel vapor. In the fuel supply pipe 20 formed of a steel sheet for supplying fuel to a fuel tank 23, the fuel supply pipe includes: a large-diameter pipe portion 21 through which the fuel passes; and a small-diameter pipe portion 22 which makes an upper portion of the large-diameter pipe portion and a lower portion of the large-diameter pipe portion communicate with each other for ventilation, and a nickel plating layer having a plating thickness of 0.5 to 10μm is formed on an inner surface of at least the small-diameter pipe portion.

No. of Pages : 21 No. of Claims : 6

(12) PATENT APPLICATION PUBLICATION
(19) INDIA
(22) Date of filing of Application :03/04/2012
(21) Application No.2844/DELNP/2012 A
(43) Publication Date : 24/07/2015

(54) Title of the invention : METHOD OF NORMALIZING IMPLANT STRAIN READINGS TO ASSESS BONE HEALING

(51) International classification :A61B 17/80
(31) Priority Document No :61/253,583
(32) Priority Date :21/10/2009
(33) Name of priority country :U.S.A.
(86) International Application No :PCT/US2010/053519
Filing Date :21/10/2010
(87) International Publication No :WO 2011/050149
(61) Patent of Addition to Application Number :NA
Filing Date :NA
(62) Divisional to Application Number :NA
Filing Date :NA

(71)**Name of Applicant :**
1)SYNTHES GMBH
Address of Applicant :EIMATTSTRASSE 3, CH-4436 OBERDORF, SWITZERLAND
(72)**Name of Inventor :**
1)CARL DEIRMENGIAN
2)GEORGE MIKHAIL
3)GLEN PIERSON

(57) Abstract :
A device for treating bone in a living body includes (a) comprises an implant configured for attachment to, a bone; (b) a first sensor measuring a strain on a first portion of the implant, the first portion of the implant being configured to be mechanically coupled to a weakened portion of a bone when the implant is coupled to the bone in a target position in combination; and (c) a second sensor measuring strain in a non-weakened portion of the bone.

No. of Pages : 16 No. of Claims : 14

(12) PATENT APPLICATION PUBLICATION
(19) INDIA
(22) Date of filing of Application :03/04/2012
(21) Application No.2845/DELNP/2012 A
(43) Publication Date : 24/07/2015

(54) Title of the invention : VARIABLE ANGLE LOCKING BUTTRESS PINS

(51) International classification :A61B 17/86
(31) Priority Document No :61/261,974
(32) Priority Date :17/11/2009
(33) Name of priority country :U.S.A.
(86) International Application No :PCT/US2010/056833
Filing Date :16/11/2010
(87) International Publication No :WO 2011/062896
(61) Patent of Addition to Application Number :NA
Filing Date :NA
(62) Divisional to Application Number :NA
Filing Date :NA

(71)**Name of Applicant :**
1)SYNTHES GMBH
Address of Applicant :EIMATTSTRASSE 3, CH-4436 OBERDORF, SWITZERLAND
(72)**Name of Inventor :**
1)ADAM HASHMI
2)DIRK KERSTAN

(57) Abstract :
A buttress pin for fixing an implant to a bone, comprises a head at a proximal end, the head comprising a rounded outer profile and including first threading and a shaft extending distally from the head, the shaft including second threading extending over at least a portion of a length thereof, a position of a proximal end of the second threading along the shaft being spaced from a distal end of the first threading by a distance equal to a distance between a proximal end of a hole in an implant to be anchored to a bone via the buttress pin and a surface of the bone when the implant is in a target position on the bone.

No. of Pages : 14 No. of Claims : 14

(12) PATENT APPLICATION PUBLICATION
(21) Application No.2846/DELNP/2012 A
(19) INDIA
(22) Date of filing of Application :03/04/2012
(43) Publication Date : 24/07/2015

(54) Title of the invention : PROTECTION SLEEVE RETENTION DEVICE

(51) International classification :A61B 17/17
(31) Priority Document No :61/251,935
(32) Priority Date :15/10/2009
(33) Name of priority country :U.S.A.
(86) International Application No :PCT/US2010/051633
Filing Date :06/10/2010
(87) International Publication No :WO 2011/046784
(61) Patent of Addition to Application Number :NA
Filing Date :NA
(62) Divisional to Application Number :NA
Filing Date :NA

(71)**Name of Applicant :**
1)SYNTHES GMBH
Address of Applicant :EIMATTSTRASSE 3, CH-4436 OBERDORF, SWITZERLAND
(72)**Name of Inventor :**
1)SEAN POWELL

(57) Abstract :
A system for inserting an implant into a bone comprises a base, a first arm coupled to and extending away from the base in a first direction, a distal end of the first arm configured to removably attach to an implant so that the base is in a desired orientation relative thereto. The system also comprises a second arm extending away from the base in alignment with a target structure of the implant and including a first aiming hole through which the target structure is to be accessed. The system also comprises a protection sleeve and a first aiming hole configured such that, in a first orientation, the protection sleeve is frictionally locked within the first aiming hole and, when rotated therewithin to a second configuration, the protection sleeve is free to move therethrough.

No. of Pages : 29 No. of Claims : 15

(12) PATENT APPLICATION PUBLICATION
(21) Application No.2847/DELNP/2012 A
(19) INDIA
(22) Date of filing of Application :03/04/2012
(43) Publication Date : 24/07/2015

(54) Title of the invention : ANTITHEFT DEVICE FOR THE STEERING COLUMN OF A VEHICLE HAVING SUPER-LOCKOUT PROVIDED BY AN INTERMEDIATE ROCKER BAR

(51) International classification :B60R 25/02
(31) Priority Document No :0905363
(32) Priority Date :06/11/2009
(33) Name of priority country :France
(86) International Application No :PCT/EP2010/065821
Filing Date :20/10/2010
(87) International Publication No :WO 2011/054673
(61) Patent of Addition to Application Number :NA
Filing Date :NA
(62) Divisional to Application Number :NA
Filing Date :NA

(71)**Name of Applicant :**
1)VALEO SECURITE HABITACLE
Address of Applicant :76 RUE AUGUSTE PERRET-ZI EUROPARC, F-94046 CRETEIL CEDEX, FRANCE
(72)**Name of Inventor :**
1)FREDERIC MALTAVERNE
2)CHRISTOPHE PERRIN

(57) Abstract :
The invention relates to an autotheft device (2) for the steering column of a vehicle, comprising: a locking portion including a bolt for locking the steering column, and a mobile member capable of controlling the locking-in-position of the bolt; and an access portion including a latch, wherein said device includes a rocker arm for converting a movement of the mobile control member into the release of a super-lockout element.

No. of Pages : 14 No. of Claims : 10

(12) PATENT APPLICATION PUBLICATION
(21) Application No.2848/DELNP/2012 A
(19) INDIA
(22) Date of filing of Application :03/04/2012
(43) Publication Date : 24/07/2015

(54) Title of the invention : MANIFOLD FOR A FLUIDIC CARTRIDGE

(51) International classification :B01L 3/00
(31) Priority Document No :09173604.1
(32) Priority Date :21/10/2009
(33) Name of priority country :EUROPEAN UNION
(86) International Application No :PCT/CH2010/000264
Filing Date :20/10/2010
(87) International Publication No :WO 2011/047494
(61) Patent of Addition to Application Number :NA
Filing Date :NA
(62) Divisional to Application Number :NA
Filing Date :NA

(71)**Name of Applicant :**
1)BIOCARTIS SA
Address of Applicant :QUARTIER INNOVATION EPFL-G, CH-1015 LAUSANNE, SWITZERLAND
(72)**Name of Inventor :**
1)RONALD DE GIER
2)ARTHUR R. VAN ES
3)PETER WILNAUER

(57) Abstract :
The invention relates to a manifold system comprising a manifold housing and a manifold core. Means of using an oblique surface inside of the manifold housing onto which a manifold core is to be inserted and by adapting a fluidic channel in the manifold housing the corresponding way, such a manifold housing is producible by manifold casting without having an undercut. Thus, the use of sliders during production of such a manifold housing is avoided. Any need for applying external forces (e.g. by an instrument) for obtaining a seal between the manifold housing and the manifold core is obviated.

No. of Pages : 25 No. of Claims : 25

(12) PATENT APPLICATION PUBLICATION
(19) INDIA
(22) Date of filing of Application :03/04/2012
(21) Application No.2849/DELNP/2012 A
(43) Publication Date : 24/07/2015

(54) Title of the invention : METHODS OF REDUCING PLANTS STRESS

(51) International classification :A01H 1/00
(31) Priority Document No :61/246,453
(32) Priority Date :28/09/2009
(33) Name of priority country :U.S.A.
(86) International Application No :PCT/US2010/050520
Filing Date :28/09/2010
(87) International Publication No :WO 2011/038389
(61) Patent of Addition to Application Number :NA
Filing Date :NA
(62) Divisional to Application Number :NA
Filing Date :NA

(71)**Name of Applicant :**
1)FBSCIENCES HOLDINGS, INC.
Address of Applicant :153 N. MAIN STREET, SUITE 100, COLLIERVILLE, TN 38017, U.S.A.
(72)**Name of Inventor :**
1)BRIAN B. GOODWIN

(57) Abstract :
A method of regulating plant genes is provided. The method provides improved drought stress or salinity stress for plants. The method comprises treating a part of a plant or the locus thereof with a composition of matter, the composition of matter comprising an agriculturally acceptable mixture of compounds of natural organic material of defined composition.

No. of Pages : 96 No. of Claims : 13

(12) PATENT APPLICATION PUBLICATION
(21) Application No.3316/DEL/2014 A
(19) INDIA
(22) Date of filing of Application :17/11/2014
(43) Publication Date : 24/07/2015

(54) Title of the invention : ACTUATOR FOR MEDIUM VOLTAGE SWITCHGEAR

(51) International classification :H01H3/54
(31) Priority Document No :13005415.8
(32) Priority Date :18/11/2013
(33) Name of priority country :EUROPEAN UNION
(86) International Application No :NA
Filing Date :NA
(87) International Publication No : NA
(61) Patent of Addition to Application Number :NA
Filing Date :NA
(62) Divisional to Application Number :NA
Filing Date :NA

(71)**Name of Applicant :**
1)ABB TECHNOLOGY AG
Address of Applicant :Affolternstrasse 44, 8050 Zurich, SWITZERLAND
(72)**Name of Inventor :**
1)CHRISTIAN REUBER

(57) Abstract :
The invention relates to an actuator for medium voltage switchgear, with a core which consists of a package of core element layers made of magnetic material, and permanent magnets between the core elements, fixed with screws with screwheads, a movable plate made of magnetic material, a movable plate in order to open or close a magnetic circuit to the core, an electromagnetic coil, surrounded by the core elements, and a central actuator rod. In order to avoid the mechanical infringement of the environment of the actuator by prominent screw heads, without weaken the magnetic force, the scews for mechanical connection of the core element layers and the permanent magnets are oriented perpendicular to the plane of stacking of the core element layers, and that screw-holes for the screws are implemented through the core element layers and the permament magnets, and that the screw-holes end in diameter extended openings, so that the screwheads and/or the screwnuts are positioned sunken into these diameter extended openings.

No. of Pages : 13 No. of Claims : 4

(12) PATENT APPLICATION PUBLICATION
(19) INDIA
(22) Date of filing of Application :02/04/2012
(21) Application No.2802/DELNP/2012 A
(43) Publication Date : 24/07/2015

(54) Title of the invention : DISPLAY UNIT

(51) International classification :B60K 35/00
(31) Priority Document No :10 2009 048 055.2
(32) Priority Date :02/10/2009
(33) Name of priority country :Germany
(86) International Application No :PCT/EP2010/005991
Filing Date :01/10/2010
(87) International Publication No :WO 2011038922
(61) Patent of Addition to Application Number :NA
Filing Date :NA
(62) Divisional to Application Number :NA
Filing Date :NA

(71)**Name of Applicant :**
1)JOHNSON CONTROLS GMBH
Address of Applicant :INDUSTRIESTRASSE 20-30, 51399 BURSCHEID, GERMANY
(72)**Name of Inventor :**
1)ANDREAS DEUBZER
2)REMI PELZMAN
3)STEPHANE BERGOT

(57) Abstract :
The present invention relates to a display unit for a vehicle, wherein the display unit is configured for displaying a colour information in dependence of a driving state information of the vehicle, wherein the driving state information is referring to the current fuel consumption of the vehicle, wherein the colour information comprises a coloured symbol. The present invention further relates to a vehicle comprising such a display unit.

No. of Pages : 16 No. of Claims : 12

(12) PATENT APPLICATION PUBLICATION
(21) Application No.2803/DELNP/2012 A
(19) INDIA
(22) Date of filing of Application :02/04/2012
(43) Publication Date : 24/07/2015

(54) Title of the invention : DEVICE FOR FILTERING THE INTAKE AIR OF AN INTERNAL COMBUSTION ENGINE HAVING VENTILATION MEANS

(51) International classification	:F02C 7/052	(71)**Name of Applicant :**
(31) Priority Document No	:0957208	**1)TURBOMECA**
(32) Priority Date	:14/10/2009	Address of Applicant :F-64510 BORDES, FRANCE,
(33) Name of priority country	:France	(72)**Name of Inventor :**
(86) International Application No	:PCT/EP2010/065392	**1)OLIVIER PIERRE DESCUBES**
Filing Date	:14/10/2010	
(87) International Publication No	:WO 2011/045363	
(61) Patent of Addition to Application Number	:NA	
Filing Date	:NA	
(62) Divisional to Application Number	:NA	
Filing Date	:NA	

(57) Abstract :
The present invention relates to a device for filtering the intake air of an internal combustion engine, including at least one filtering element (8) having an inlet for air being treated, a first clean air outlet toward the engine and a second air outlet toward the outside, and a ventilation means (10) for driving the air from said second air outlet. The air-filtering device is characterized in that the ventilation means includes a fan wheel (20) driven by a turbine (24) set into motion by a gas flow taken from the engine.

No. of Pages : 13 No. of Claims : 6

(12) PATENT APPLICATION PUBLICATION
(21) Application No.3268/DEL/2014 A
(19) INDIA
(22) Date of filing of Application :12/11/2014
(43) Publication Date : 24/07/2015

(54) Title of the invention : PLANT MONITORING CONTROL SYSTEM

(51) International classification	:g05b	(71)**Name of Applicant :**
(31) Priority Document No	:2013-236043	**1)HITACHI, LTD.**
(32) Priority Date	:14/11/2013	Address of Applicant :6-6, Marunouchi 1-chome, Chiyoda-ku, Tokyo, JAPAN
(33) Name of priority country	:Japan	(72)**Name of Inventor :**
(86) International Application No	:NA	**1)NIIJIMA Yoshiaki**
Filing Date	:NA	**2)OOSAKI Nobuhisa**
(87) International Publication No	: NA	**3)WATAHIKI Hiroaki**
(61) Patent of Addition to Application Number	:NA	**4)KAWASUMI Shigeaki**
Filing Date	:NA	
(62) Divisional to Application Number	:NA	
Filing Date	:NA	

(57) Abstract :
There is disclosed a plant monitoring control system having a function of restoring a database that manages the operational data about a manufacturing plant. The control system has a controller (3) connected with a server (2) via a network (4). If an abnormality occurs in the network (4), operational data obtained from a subject monitored by the controller (3) is stored in the controller (3). If the network (4) is restored to its normal state, operational data items which correspond to operational data items to be stored in a database (23) of the server (2) during a period of time from the date and time of the occurrence of the abnormality in the network (4) to the recovery date and time of the network (4) are extracted from the operational data stored in the controller (3). The extracted operational data items are sent as backup data from the controller (3) to the server (2) via the network (4). The server (2) stores the received backup data in the database (23) and restores the database (23) to its normal state.

No. of Pages : 16 No. of Claims : 4

(12) PATENT APPLICATION PUBLICATION
(19) INDIA
(22) Date of filing of Application :01/11/2012
(21) Application No.3363/DEL/2012 A
(43) Publication Date : 24/07/2015

(54) Title of the invention : APPARATUS AND METHOD FOR CONTROLLING EMISSIONS IN AN INTERNAL COMBUSTION ENGINE

(51) International classification :B67B
(31) Priority Document No :13/314427
(32) Priority Date :08/12/2011
(33) Name of priority country :U.S.A.
(86) International Application No :NA
Filing Date :NA
(87) International Publication No : NA
(61) Patent of Addition to Application Number :NA
Filing Date :NA
(62) Divisional to Application Number :NA
Filing Date :NA

(71)**Name of Applicant :**
1)GENERAL ELECTRIC COMPANY
Address of Applicant :1 RIVER ROAD, SCHENECTADY, NEW YORK 12345, USA
(72)**Name of Inventor :**
1)MANN, SCOTT K.
2)WENTZ, JARED J.

(57) Abstract :
Certain embodiments of methods and systems for operating an internal combustion engine over a range of operating condition are disclosed. One embodiment of a method includes operating the engine at an initial 02 voltage fe setpoint; and automatically adjusting the 02 voltage setpoint to a new 02 voltage setpoint to reduce emissions. In certain embodiments a control system for controlling emissions in an internal combustion is provided. The control system includes at least one subsystem that controls an 02 voltage setpoint; at least one subsystem that measures NOx emissions in the engine exhaust; and at least one subsystem that initiates a lambda sweep to determine an optimal 02 voltage setpoint.

No. of Pages : 31 No. of Claims : 26

(12) PATENT APPLICATION PUBLICATION
(19) INDIA
(22) Date of filing of Application :01/11/2012
(21) Application No.3364/DEL/2012 A
(43) Publication Date : 24/07/2015

(54) Title of the invention : STEAM TURBINE, BLADE, AND METHOD.

(51) International classification :B65D
(31) Priority Document No :CO2011A000060
(32) Priority Date :12/12/2011
(33) Name of priority country :Italy
(86) International Application No :NA
Filing Date :NA
(87) International Publication No : NA
(61) Patent of Addition to Application Number :NA
Filing Date :NA
(62) Divisional to Application Number :NA
Filing Date :NA

(71)**Name of Applicant :**
1)NUOVO PIGNONE S.P.A.
Address of Applicant :FELICE MATTEUCCI, 2 50127 FLORENCE IT Italy
(72)**Name of Inventor :**
1)GRILLI, MARCO
2)GIUSTI, ENRICO
3)IMPARATO, ENZO

(57) Abstract :
A stator blade ring for the last stage of a multi-stage steam turbine includes a plurality A of stator blade modules defining an annular chamber, each stator blade module including an elongated blade portion. The elongated blade portion further includes a longitudinal passageway and an inner portion brazed to a first longitudinal end of the blade portion, the inner portion including a through hole forming a portion of the annular chamber and an inner passageway extending from the through hole to the longitudinal passageway. An outer portion is brazed to a second longitudinal end of the blade portion and engaged to the steam turbine. The outer portion includes an outer passageway open to a surface of the steam turbine and the longitudinal passageway.

No. of Pages : 20 No. of Claims : 10

(12) PATENT APPLICATION PUBLICATION
(19) INDIA
(22) Date of filing of Application :03/04/2012
(21) Application No.2835/DELNP/2012 A
(43) Publication Date : 24/07/2015

(54) Title of the invention : FORCED-FLOW STEAM GENERATOR FOR BURNING DRY BROWN COAL

(51) International classification :F01D
(31) Priority Document No :10 2009 040 249.7
(32) Priority Date :04/09/2009
(33) Name of priority country :Germany
(86) International Application No :PCT/DE2010/000982
Filing Date :20/08/2010
(87) International Publication No :WO 2011/026462
(61) Patent of Addition to Application Number :NA
Filing Date :NA
(62) Divisional to Application Number :NA
Filing Date :NA

(71)**Name of Applicant :**
1)ALSTOM TECHNOLOGY LTD.
Address of Applicant :BROWN BOVERI STRASSE 7/699/5, CH-5401 BADEN, SWITZERLAND
(72)**Name of Inventor :**
1)BERNDT, THORALF
2)CHEN, QIURONG
3)NA
4)STAMATELOPOULOS, GEORG-NIKOLAUS
5)WEISSINGER, GERHARD

(57) Abstract :
The invention relates to a forced-flow steam generator for burning dry brown coal without assistance from recirculated waste gas in the combustion chamber thereof. Said forced-flow steam generator (1) comprises a combustion chamber (2) and a waste gas flue (3) connected to the upper end thereof, and peripheral walls (4) surromsding said flue. Said walls (4) are formed from tubular walls (5), the tubes thereof guiding the water/steam working medium. The combustion chamber (2) comprises at least one burner (6), and downstream heating surfaces (7) are arranged in the waste gas flue (3). Part of the peripheral walls (4) is covered in the region of the combustion chamber (2) by at least one bulkhead heating surface (8), the size of which on the surface side being determined such that the heat absorption of the peripheml walls (4) and therefore the temperature thereof are reduced to a value enabling the formation of the peripheral walls (4) from modified, heat-resistant 2.25-2.5% chrome steel that does not require any heat aftertreatment following the welding treatment thereof.

No. of Pages : 21 No. of Claims : 8

(12) PATENT APPLICATION PUBLICATION
(19) INDIA
(22) Date of filing of Application :03/04/2012
(21) Application No.2836/DELNP/2012 A
(43) Publication Date : 24/07/2015

(54) Title of the invention : FORCED-FLOW STEAM GENERATOR FOR USING AT STEAM TEMPERATURES OF ABOVE 650°C.

(51) International classification :F01D
(31) Priority Document No :10 2009 040 250.0
(32) Priority Date :04/09/2009
(33) Name of priority country :Germany
(86) International Application No :PCT/DE2010/000981
Filing Date :20/08/2010
(87) International Publication No :WO 2011/026461
(61) Patent of Addition to Application Number :NA
Filing Date :NA
(62) Divisional to Application Number :NA
Filing Date :NA

(71)**Name of Applicant :**
1)ALSTOM TECHNOLOGY LTD.
Address of Applicant :BROWN BOVERI, STRASSE 7/699/5, CH-5401 BADEN, SWITZERLAND
(72)**Name of Inventor :**
1)BERNDT, THORALF
2)CHEN, QIURONG
3)STAMATELOPOULOS, GEORG-NIKOLAUS
4)WEISSINGER, GERHARD

(57) Abstract :
The invention relates to a forced-flow steam generator for using steam temperatures of above 650°C. Said forced-flow steam generator (1) comprises a combustion chamber (2) and a waste gas flue (3) connected to the upper end thereto, and peripheral walls (4) surrounding said flue. Said walls (4) are formed from tubular walls (5), the tubes thereof guiding the water/steam working medium. The combustion chamber (2) comprises at least one burner (6), and downstream heating surfaces (7) are arranged in the waste gas flue (3) . Part of the peripheral walls (4) is covered in the region of the combustion chamber (2) by at least one bulkhead heating surface (8), the size of which on the surface side being determined such that the heat absorption of the peripheral walls (4) and therefore the temperature thereof are reduced to a value enabling the formation of the peripheral walls (4) from modified, heat-resistant 2.25-2.5% chrome steel that does not require any heat aftertreatment following the welding treatment thereof.

No. of Pages : 21 No. of Claims : 8

(12) PATENT APPLICATION PUBLICATION
(19) INDIA
(22) Date of filing of Application :03/04/2012
(21) Application No.2837/DELNP/2012 A
(43) Publication Date : 24/07/2015

(54) Title of the invention : A CYANOVIRIN N MUTANT, MODIFIED DERIVATIVE AND USES THEREOF

(51) International classification :C07K 14/405
(31) Priority Document No :200910192063.0
(32) Priority Date :04/09/2009
(33) Name of priority country :China
(86) International Application No :PCT/CN2010/073124
Filing Date :24/05/2010
(87) International Publication No :WO 2011/026351
(61) Patent of Addition to Application Number :NA
Filing Date :NA
(62) Divisional to Application Number :NA
Filing Date :NA

(71)**Name of Applicant :**
1)JINAN UNIVERSITY
Address of Applicant :ROAD 601, HUANGPU DADAOXI GUANGZHOU, GUANGDONG 510632, CHINA
(72)**Name of Inventor :**
1)XIONG, SHENG
2)CHEN, WEI
3)QIAN, CHUIWEN
4)WANG, YIFEI
5)KITAZATO, KAIO

(57) Abstract :
A cyanovirin N (CVN) mutant, its PEG modified derivative and their uses in pharmaceutical preparations. The cyanovirin N mutant consists of a sequence A and a sequence B, in which the sequence A is a linker peptide with hydrophilicity and flexibility, and the sequence B is a codon optimized sequence of the cyanovirin N. The cyanoviein N mutant is PEG-modified to obtain a derivative. The mutant and the derivative thereof both exhibit good anti-HIV activity, and have prospect of being used in pharmaceutical preparations for anti-HIV or for other viral microorganisms.

No. of Pages : 45 No. of Claims : 10

(12) PATENT APPLICATION PUBLICATION
(21) Application No.5761/DELNP/2009 A
(19) INDIA
(22) Date of filing of Application :07/09/2009
(43) Publication Date : 24/07/2015

(54) Title of the invention : PNEUMATICALLY DAMPING MOUNT

(51) International classification :F16F 13/08
(31) Priority Document No :10 2007 012158.1
(32) Priority Date :12/03/2007
(33) Name of priority country :Germany
(86) International Application No :PCT/EP08/052745
Filing Date :07/03/2008
(87) International Publication No :WO 2008/110506
(61) Patent of Addition to Application Number :NA
Filing Date :NA
(62) Divisional to Application Number :NA
Filing Date :NA

(71)**Name of Applicant :**
1)TRELLEBORG AUTOMOTIVE GERMANY GMBH,
Address of Applicant :BERGSTRASSE 63A, 56203 HOHR-GRENZHAUSEN, GERMANY.
(72)**Name of Inventor :**
1)MANFRED HOFMANN,
2)ARNDT GRAEVE,

(57) Abstract :
The invention relates to a pneumatically damping mount, in particular an engine mount for motor vehicles, comprising a bearing spring (12) of an elastomeric material for supporting a mount core (13) and delimiting a working chamber (11). The working chamber (11) is filled with a gas, in particular air, and communicates with the ambience via a nozzle opening (18). To enable further deformation of the mount after closing of the working chamber (11), a progression element (17) of an elastomeric material is provided which is arranged opposite the bearing spring (12) and delimits the working chamber (11) together with the former.

No. of Pages : 14 No. of Claims : 11

(12) PATENT APPLICATION PUBLICATION
(19) INDIA
(22) Date of filing of Application :03/04/2012
(21) Application No.1025/DEL/2012 A
(43) Publication Date : 24/07/2015

(54) Title of the invention : COPOLYMER DISPERSION FOR WATER WHITENING RESISTANT COATINGS

(51) International classification :C07C
(31) Priority Document No :2011/10114190.6
(32) Priority Date :18/04/2011
(33) Name of priority country :China
(86) International Application No :NA
Filing Date :NA
(87) International Publication No :NA
(61) Patent of Addition to Application Number :NA
Filing Date :NA
(62) Divisional to Application Number :NA
Filing Date :NA

(71)**Name of Applicant :**
1)ROHM AND HAAS COMPANY
Address of Applicant :100 INDEPENDENCE WALL WEST, PHILADELPHIA 19106, U.S.A.
(72)**Name of Inventor :**
1)JIANMING XU
2)CATHERINE LIU
3)TINGKE ZHANG

(57) Abstract :
The present invention provides an aqueous copolymer dispersion comprising a copolymer and a polyamine, the copolymer comprises, as copolymerized units, at least one nonionic monomer selected from (meth)acrylate C6-C22 alkyl ester or Versatic vinyl ester; wherein the amount of the nonionic monomer ranges from 15% to less than 50% and wherein the amount of the polyamine ranges from 0.1 to 2%, by dry weight percentage based on the dry weight of the copolymer. The copolymer dispersion is suitable for use in coating compositions such as stone paints with significant improvement of water whitening resistance.

No. of Pages : 21 No. of Claims : 10

(12) PATENT APPLICATION PUBLICATION
(21) Application No.1050/DEL/2012 A
(19) INDIA
(22) Date of filing of Application :04/04/2012
(43) Publication Date : 24/07/2015

(54) Title of the invention : CONNECTION ELEMENT FOR LUBRICANT

(51) International classification :F16B
(31) Priority Document No :11169139.0
(32) Priority Date :08/06/2011
(33) Name of priority country :EPO
(86) International Application No :NA
Filing Date :NA
(87) International Publication No :NA
(61) Patent of Addition to Application Number :NA
Filing Date :NA
(62) Divisional to Application Number :NA
Filing Date :NA

(71)**Name of Applicant :**
1)WARTSILA SCHWEIZ AG
Address of Applicant :ZURCHERSTRASSE 12, CH-8401 WINTERTHUR, SWITZERLAND.
(72)**Name of Inventor :**
1)DANIEL, STRODECKE

(57) Abstract :
A piston engine includes an engine housing (25) and a lubricant storage tank (23) and a connection element (24) for connecting the engine housing to the lubricant storage tank. The connection element has a pipe piece (26) which has a first end (27) which is connected in a fluid-tight manner to the engine housing. A compensation element (29) is provided at the lubricant storage tank to enable changes in the spacing between the engine housing and the lubricant storage tank on assembly. The compensation element contains a sealant (45) in which a second end (28) of the pipe piece is at least partly received so that a fluid-tight connection can be established between the second end of the pipe piece and the lubricant storage tank.

No. of Pages : 28 No. of Claims : 15

(12) PATENT APPLICATION PUBLICATION
(19) INDIA
(22) Date of filing of Application :18/06/2012
(21) Application No.1871/DEL/2012 A
(43) Publication Date : 24/07/2015

(54) Title of the invention : IMPROVED THROUGHPUT SOLAR STILL

(51) International classification	:H01L31/18, H01L31/0224
(31) Priority Document No	:213709
(32) Priority Date	:21/06/2011
(33) Name of priority country	:Israel
(86) International Application No	:NA
Filing Date	:NA
(87) International Publication No	: NA
(61) Patent of Addition to Application Number	:NA
Filing Date	:NA
(62) Divisional to Application Number	:NA
Filing Date	:NA

(71)**Name of Applicant :**
1)BEN, DOR SHIMON
Address of Applicant :KFAR ADUMIM 90618 ISRAEL
2)RONALD, SILVER
(72)**Name of Inventor :**
1)BEN, DOR SHIMON
2)RONALD, SILVER

(57) Abstract :
The present invention is directed to high efficiency solar still assemblies and their components, and more particularly, a solar still capable of absorbing direct sunlight and redirected sunlight using a mobile heliostat configured to align the still evaporator, the heliostat and a counter-current heat exchanger with the sun.

No. of Pages : 15 No. of Claims : 17

(12) PATENT APPLICATION PUBLICATION
(21) Application No.6368/DELNP/2009 A
(19) INDIA
(22) Date of filing of Application :06/10/2009
(43) Publication Date : 24/07/2015

(54) Title of the invention : FUNGICIDAL COMPOSITIONS

(51) International classification :A01N 43/56
(31) Priority Document No :07008370.4
(32) Priority Date :25/04/2007
(33) Name of priority country :EUROPEAN UNION
(86) International Application No :PCT/EP2008/003279
Filing Date :23/04/2008
(87) International Publication No :WO 2008/131901
(61) Patent of Addition to Application Number :NA
Filing Date :NA
(62) Divisional to Application Number :NA
Filing Date :NA

(71)**Name of Applicant :**
1)SYNGENTA PARTICIPATIONS AG.
Address of Applicant :SCHWARZWALDALLEE 215, CH-4058 BASEL SWITZERLAND.
(72)**Name of Inventor :**
1)TOBLER HANS
2)WALTER HARALD
3)HAAS ULRICH JOHANNES

(57) Abstract :
The present invention relates to a control system, a method and arrangement for motors and motor-compressors, designed for operation in a wide voltage range of the feed network. The control system, method and arrangement for motors and motor-compressors basically consist in associating an electronic control (10) capable of regulating the voltage supplied to a motor with windings and a magnetic core suitably dimensioned so as to fully meet the start and operation torques in the minimum voltage expected for the electric energy network, the electronic control (10) incorporating the method of limiting the effective value on the motor windings so as to keep its capability of meeting the minimum torques specified for the application, independently of the rise in the network voltage to values higher than the minimum voltage expected for the network.

No. of Pages : 89 No. of Claims : 19

(12) PATENT APPLICATION PUBLICATION
(19) INDIA
(22) Date of filing of Application :02/04/2012
(21) Application No.2808/DELNP/2012 A
(43) Publication Date : 24/07/2015

(54) Title of the invention : TURBOMACHINE

(51) International classification :F02C 6/12
(31) Priority Document No :0917513.4
(32) Priority Date :06/10/2009
(33) Name of priority country :U.K.
(86) International Application No :PCT/GB2010/001861
Filing Date :05/10/2010
(87) International Publication No :WO 2011/042691
(61) Patent of Addition to Application Number :NA
Filing Date :NA
(62) Divisional to Application Number :NA
Filing Date :NA

(71)**Name of Applicant :**
1)CUMMINS LTD.
Address of Applicant :ST. ANDREWS ROAD, HUDDERSFIELD HD1 6RA (GB) U.K.
(72)**Name of Inventor :**
1)ROBERTS, TOM J.
2)MCEWEN, JAMES ALEXANDER
3)HOLROYD, ROBERT L.
4)DENHOLM, TIM

(57) Abstract :
A variable geometry turbine comprising a turbine wheel mounted for rotation about a turbine axis within a housing, the housing defining an annular inlet surrounding the turbine wheel and defined between first and second inlet sidewalls; and a cylindrical sleeve axially movable across the annular inlet to vary the size of a gas flow path through the inlet; wherein the annular inlet is divided into a first annular inlet portion and a second annular inlet portion axially offset from the first inlet portion, inlet vanes extending axially into each of the first and second inlet portions, the inlet vanes defining axially adjacent inlet passages; wherein the configuration of the inlet vanes extending into the first inlet portion differs from the configuration of the inlet vanes extending into the second inlet portion in that the vanes extending into the first inlet portion are circumferentially offset from the vanes extending into the second inlet portion.

No. of Pages : 84 No. of Claims : 16

(12) PATENT APPLICATION PUBLICATION
(19) INDIA
(22) Date of filing of Application :02/04/2012
(21) Application No.2809/DELNP/2012 A
(43) Publication Date : 24/07/2015

(54) Title of the invention : METHOD AND APPARATUS FOR PERFORMING INTER-FREQUENCY AND/OR INTER-RADIO ACCESS TECHNOLOGY (RAT) MEASUREMENTS IN A MULTI-RECEIVER WIRELESS TRANSMIT/RECEIVE UNIT (WTRU)

(51) International classification :H04W 36/00
(31) Priority Document No :61/247,628
(32) Priority Date :01/10/2009
(33) Name of priority country :U.S.A.
(86) International Application No :PCT/US2010/051098
Filing Date :01/10/2010
(87) International Publication No :WO 2011/041662
(61) Patent of Addition to Application Number :NA
Filing Date :NA
(62) Divisional to Application Number :NA
Filing Date :NA

(71)**Name of Applicant :**
1)INTERDIGITAL PATENT HOLDINGS, INC.
Address of Applicant :3411 SILVERSIDE ROAD, CONCORD PLAZA, SUITE 105, HAGLEY BUILDING, WILMINGTON, DELAWARE 19810, USA
(72)**Name of Inventor :**
1)CAVE, CHRISTOPHER R.
2)LEVY, JOSEPH, S.
3)COMSA, VIRGIL

(57) Abstract :
Techniques for performing inter-frequency and/or inter-radio access technology (RAT) measurements are disclosed. A multi-receiver wireless transmit/receive unit (WTRU) may receive downlink transmissions via a plurality of downlink carriers simultaneously. The WTRU may perform inter-frequency and/or inter-RAT measurements using an inactive receiver without measurement gaps if at least one receiver is inactive. If the WTRU receives a measurement order on a disabled carrier, the WTRU may perform measurements on the disabled carrier without measurement gaps using an inactive receiver while maintaining a status of the disabled carrier as disabled. The WTRU may perform the measurements autonomously if a trigger condition is met and at least one receiver is inactive. If all receivers are active, the WTRU may perform the measurements using measurement gaps, that may be configured on a downlink carrier, or alternatively, on an unpaired downlink carrier, or alternatively, on a subset of associated downlink uplink carrier pairs.

No. of Pages : 43 No. of Claims : 18

(12) PATENT APPLICATION PUBLICATION
(19) INDIA
(22) Date of filing of Application :01/11/2012
(21) Application No.3368/DEL/2012 A
(43) Publication Date : 24/07/2015

(54) Title of the invention : DEVICE FOR IMAGING THE INNER SURFACE OF A CAVITY IN A WORKPIECE •

(51) International classification :H04N
(31) Priority Document No :10 2011 117 618.0
(32) Priority Date :04/11/2011
(33) Name of priority country :Germany
(86) International Application No :NA
Filing Date :NA
(87) International Publication No : NA
(61) Patent of Addition to Application Number :NA
Filing Date :NA
(62) Divisional to Application Number :NA
Filing Date :NA

(71)**Name of Applicant :**
1)HOMMEL-ETAMIC GMBH
Address of Applicant :Alte Tuttlinger Strasse 20 78056 Villingen-Schwenningen GERMANY
(72)**Name of Inventor :**
1)RUDOLF MICHAEL

(57) Abstract :
The invention relates to a device (2) for imaging the inner surface (4) of a cavity (6) in a workpiece (8). The device (2) has optics (10) with a panoramic view, which has an image transmission connection with an image sensor (12) and a downstream evaluation device (14) . The device (2) also has an illumination system (16) with a light source (18) for illuminating an imaging region of the inner surface (4) imaged by the optics (10) . According to the invention, at least one light-emitting and/or light-deflecting component (20, 20) of the illumination system (16) is provided on a lens (22), in particular a front lens (24), of the optics (10).

No. of Pages : 36 No. of Claims : 18

(12) PATENT APPLICATION PUBLICATION
(21) Application No.650/DEL/2012 A
(19) INDIA
(22) Date of filing of Application :06/03/2012
(43) Publication Date : 24/07/2015

(54) Title of the invention : METHOD OF MANUFACTURING NON-ORIENTED ELECTRICAL STEEL SHEET

(51) International classification :B64D
(31) Priority Document No :NA
(32) Priority Date :NA
(33) Name of priority country :NA
(86) International Application No :NA
Filing Date :NA
(87) International Publication No :NA
(61) Patent of Addition to Application Number :NA
Filing Date :NA
(62) Divisional to Application Number :NA
Filing Date :NA

(71)**Name of Applicant :**
1)NIPPON STEEL CORPORATION
Address of Applicant :6-1, MARUNOUCHI 2-CHOME, CHIYODA-KU, TOKYO 100-8071, JAPAN
(72)**Name of Inventor :**
1)YOSHIAKI NATORI
2)KENICHI MURAKAMI
3)TAKAHIDE SHIMAZU
4)TAKUYA MATSUMOTO
5)SHUNSUKE TAKEUCHI

(57) Abstract :
First, a slab having a composition satisfying a predetermined condition is heated to from 1100°C to 1250°C . Next, in hot rolling, an outlet side temperature of a rolling pass through which a steel sheet having five times or more thickness of an obtained hot-rolled steel sheet is rolled to five times or less thickness is set to a transformation temperature Ar1, and thereby deterioration in sheet shape and fracture are prevented, and a finishing temperature of the hot rolling is set to the transformation temperature Arl - 50°C to the transformation temperature Arl, and thereby grain refining of a crystal is prevented.

No. of Pages : 26 No. of Claims : 3

(12) PATENT APPLICATION PUBLICATION
(19) INDIA
(22) Date of filing of Application :07/10/2014
(21) Application No.2855/DEL/2014 A
(43) Publication Date : 24/07/2015

(54) Title of the invention : A CLEANSING SYSTEM AND METHOD FOR DRINKING CONTAINERS

(51) International classification :C02F
(31) Priority Document No :61/929,031
(32) Priority Date :18/01/2014
(33) Name of priority country :U.S.A.
(86) International Application No :NA
Filing Date :NA
(87) International Publication No : NA
(61) Patent of Addition to Application Number :NA
Filing Date :NA
(62) Divisional to Application Number :NA
Filing Date :NA

(71)**Name of Applicant :**
1)AQUALAYER, INC.
Address of Applicant :3450 EI CAMINO REAL, #111, SANTA CLARA, CALIFORNIA 95051, U.S.A.
(72)**Name of Inventor :**
1)MALLINATH SURALIKAL
2)BHARATHI SURALIKAL

(57) Abstract :
A cleaner inserts into an unsanitary drinking container to clean the container. The cleaner comprises a cleaning at least one abrasive exterior surface or brush on said cleaner. The cleaning composition can be dispensed from within the at least one compartment into the container for cleaning.

No. of Pages : 18 No. of Claims : 7

(12) PATENT APPLICATION PUBLICATION
(19) INDIA
(22) Date of filing of Application :03/04/2012
(21) Application No.2855/DELNP/2012 A
(43) Publication Date : 24/07/2015

(54) Title of the invention : SURGICAL STAPLER HAVING A CLOSER MECHANISM

(51) International classification :A61B 17/072
(31) Priority Document No :61/250,377
(32) Priority Date :09/10/2009
(33) Name of priority country :U.S.A.
(86) International Application No :PCT/US2010/051279
Filing Date :04/10/2010
(87) International Publication No :WO 2011/044020
(61) Patent of Addition to Application Number :NA
Filing Date :NA
(62) Divisional to Application Number :NA
Filing Date :NA

(71)**Name of Applicant :**
1)ETHICON ENDO-SURGERY, INC.
Address of Applicant :4545, CREEK ROAD, CHINCINNATI, OH 45242, USA
(72)**Name of Inventor :**
1)JAMES J BEDI
2)JOHN P MEASAMER
3)CHESTER O. BAXTER, III

(57) Abstract :
A surgical stapler comprising a first handle portion comprising a staple cartridge channel configured to receive a staple cartridge and a second handle portion comprising an anvil. The stapler further comprises a rotatable latch and a latch projection, wherein the latch is rotatably coupled to one of the first handle portion and the second handle portion and wherein the latch projection extends from the other of the first handle portion and the second handle portion. The latch is configured to engage the latch projection to move the first handle portion and the second handle portion toward one another. In various embodiments, the latch projection comprises a rotatable bearing wherein the latch is configured to contact the rotatable bearing when the latch engages the latch projection.

No. of Pages : 135 No. of Claims : 10

(12) PATENT APPLICATION PUBLICATION
(19) INDIA
(22) Date of filing of Application :03/04/2012
(21) Application No.2856/DELNP/2012 A
(43) Publication Date : 24/07/2015

(54) Title of the invention : AEROSOL GENERATOR INCLUDING MULTI-COMPONENT WICK

(51) International classification :A61M 11/04
(31) Priority Document No :12/576,951
(32) Priority Date :09/10/2009
(33) Name of priority country :U.S.A.
(86) International Application No :PCT/EP2010/006198
Filing Date :11/10/2010
(87) International Publication No :WO 2011/042212
(61) Patent of Addition to Application Number :NA
Filing Date :NA
(62) Divisional to Application Number :NA
Filing Date :NA

(71)**Name of Applicant :**
1)PHILIP MORRIS PRODUCTS S.A.
Address of Applicant :QUAI JEANRENAUD 3, CH-2200 NEUCHATEL (CH) Switzerland
(72)**Name of Inventor :**
1)YANG, ZUYIN
2)WRENN, SUSAN E.

(57) Abstract :
An aerosol generator includes a composite conduit (1, 2, 3, 4) to transport multiple liquids (5,6) to a heating element (7) at flow rates such that the liquids arrive at the heating element in desirable concentrations. The heating element volatilizes the liquids to form volatilized fluid, which mixes with ambient air to form an aerosol with desirable concentrations of the multiple liquids.

No. of Pages : 12 No. of Claims : 14

(12) PATENT APPLICATION PUBLICATION
(19) INDIA
(22) Date of filing of Application :03/04/2012
(21) Application No.2857/DELNP/2012 A
(43) Publication Date : 24/07/2015

(54) Title of the invention : TURBOMACHINE

(51) International classification :F01D 5/14
(31) Priority Document No :0917513.4
(32) Priority Date :06/10/2009
(33) Name of priority country :U.K.
(86) International Application No :PCT/GB2010/001852
Filing Date :04/10/2010
(87) International Publication No :WO 2011/042686
(61) Patent of Addition to Application Number :NA
Filing Date :NA
(62) Divisional to Application Number :NA
Filing Date :NA

(71)**Name of Applicant :**
1)CUMMINS LTD.
Address of Applicant :ST. ANDREWS ROAD, HUDDERSFIELD HD1 6RA (GB) U.K.
(72)**Name of Inventor :**
1)ROBERTS, TOM J.
2)MCEWEN, JAMES ALEXANDER
3)HOLROYD, ROBERT L.
4)DENHOLM, TIM
5)PARKER, JOHN F.

(57) Abstract :
A variable geometry turbine comprising: a turbine wheel mounted for rotation about a turbine axis within a housing. The housing defines an annular inlet surrounding the turbine wheel and defined between first and second inlet sidewalls. A cylindrical sleeve is axially movable across the annular inlet to vary the size of a gas flow path through the inlet. The annular inlet is divided into axially adjacent annular portions by at least one annular baffle which is axially spaced from the first and second inlet sidewalls. Inlet vanes extend axially across at least two of said annular portions defined by the or each baffle so as to divide said annular inlet into at least two axially offset inlet passages. The configuration of the inlet vanes extending into one of the inlet portions differs from the configuration of the inlet vanes extending into another of the inlet portions and the inner diameter of the sleeve is greater than the outer diameter of the inlet passages.

No. of Pages : 64 No. of Claims : 41

(12) PATENT APPLICATION PUBLICATION
(19) INDIA
(22) Date of filing of Application :15/10/2009
(21) Application No.6586/DELNP/2009 A
(43) Publication Date : 24/07/2015

(54) Title of the invention : NEW 4,8-DIPHENYL-POLYAZANAPHTHALENE DERIVATIVES

(51) International classification :C07D 471/04
(31) Priority Document No :P200701132
(32) Priority Date :26/04/2007
(33) Name of priority country :Spain
(86) International Application No :PCT/EP2008/003357
Filing Date :25/04/2008
(87) International Publication No :WO 2008/131922
(61) Patent of Addition to Application Number :NA
Filing Date :NA
(62) Divisional to Application Number :NA
Filing Date :NA

(71)**Name of Applicant :**
1)ALMIRALL, S.A.
Address of Applicant :RONDA DEL GENERAL MITRE, 151, 08022 BARCELONA, Spain
(72)**Name of Inventor :**
1)WENCESLAO, LUMERAS AMADOR
2)PAUL ROBERT EASTWOOD

(57) Abstract :
This invention is directed to new inhibitors of the p38 mitogen-activated protein kinase having the general formula (I) to processes for their preparation; to pharmaceutical compositions comprising them; and to their use in therapy.

No. of Pages : 90 No. of Claims : 22

(12) PATENT APPLICATION PUBLICATION
(21) Application No.6587/DELNP/2009 A
(19) INDIA
(22) Date of filing of Application :15/10/2009
(43) Publication Date : 24/07/2015

(54) Title of the invention : INTEGRATED PROCESS AND APPARATUS FOR PRODUCING COAL-BASED JET FUEL, DIESEL FUEL, AND DISTELLATE FUELS

(51) International classification :C10G 1/00
(31) Priority Document No :60/907,882
(32) Priority Date :20/04/2007
(33) Name of priority country :U.S.A.
(86) International Application No :PCT/US08/056575
Filing Date :12/03/2008
(87) International Publication No :WO 2008/130746
(61) Patent of Addition to Application Number :NA
Filing Date :NA
(62) Divisional to Application Number :NA
Filing Date :NA

(71)**Name of Applicant :**
1)THE PENN STATE RESEARCH FOUNDATION
Address of Applicant :304 OLD MAIN UNIVERSITY PARK, PA 16802, USA
(72)**Name of Inventor :**
1)HAROLD H. SCHOBERT

(57) Abstract :
Coal-based jet fuel, diesel fuel and/or distillate fuels are produced by selectively introducing a coal-based product directly into the petroleum refinery process flow to thereby create an integrated refinery process for producing the distillate fuels.

No. of Pages : 27 No. of Claims : 11

(12) PATENT APPLICATION PUBLICATION
(19) INDIA
(22) Date of filing of Application :02/04/2012
(21) Application No.2805/DELNP/2012 A
(43) Publication Date : 24/07/2015

(54) Title of the invention : PHARMACEUTICAL COMPOSITON, PHARMACEUTICAL DOSAGE FORM, PROCESS FOR THEIR PREPARATION, METHODS FOR TREATING AND USES THEREOF

(51) International classification :A61K 9/20
(31) Priority Document No :09172081.3
(32) Priority Date :02/10/2009
(33) Name of priority country :EUROPEAN UNION
(86) International Application No :PCT/EP2010/064619
Filing Date :01/10/2010
(87) International Publication No :WO 2011/039337
(61) Patent of Addition to Application Number :NA
Filing Date :NA
(62) Divisional to Application Number :NA
Filing Date :NA

(71)**Name of Applicant :**
1)BOEHRINGER INGELHEIM INTERNATIONAL GMBH
Address of Applicant :BINGER STRASSE 173, 55216 INGELHEIM AM RHEIN, GERMANY
(72)**Name of Inventor :**
1)PETER SCHNEIDER
2)WOLFRAM EISENREICH
3)NANTHARAT PEARNCHOB

(57) Abstract :
The present invention relates to pharmaceutical compositions comprising fixed dose combinations of a SGLT-2 inhibitor drug and a partner drug, processes for the preparation thereof, and their use to treat certain diseases.

No. of Pages : 82 No. of Claims : 38

(12) PATENT APPLICATION PUBLICATION
(19) INDIA
(22) Date of filing of Application :02/04/2012
(21) Application No.2806/DELNP/2012 A
(43) Publication Date : 24/07/2015

(54) Title of the invention : ORGANIC PHOTOSENSITIVE OPTOELECTRONIC DEVICES

(51) International classification :H01L 27/30
(31) Priority Document No :0915501.1
(32) Priority Date :04/09/2009
(33) Name of priority country :U.K.
(86) International Application No :PCT/GB2010/001673
Filing Date :03/09/2010
(87) International Publication No :WO 2011/027124
(61) Patent of Addition to Application Number :NA
Filing Date :NA
(62) Divisional to Application Number :NA
Filing Date :NA

(71)**Name of Applicant :**
1)UNIVERSITY OF WARWICK
Address of Applicant :UNIVERSITY HOUSE, COVENTRY CV4 8UW, UNITED KINGDOM
(72)**Name of Inventor :**
1)JONES, TIMOTHY
2)HATTON, ROSS

(57) Abstract :
A photosensitive optoelectronic device (1) comprises a plurality of organic semiconductor sub-cells (10, 11, 12, 13) arranged in a stack between electrodes (3, 5), each sub-cell comprising donor material (14, 16, 23, 25) and acceptor material (15, 17, 24, 26) providing a heterojunction. There is a recombination layer (19, 22, 28) between adjacent sub-cells. The sub-cells are arranged in two groups (20, 29). The sub-cells (10, 11; 12, 13) within a group (20; 29) are responsive over substantially the same part of the light spectrum. The groups (20, 29) differ substantially from each other in respect of the parts of the light spectrum over which their respective sub-cells are responsive.

No. of Pages : 19 No. of Claims : 26

(12) PATENT APPLICATION PUBLICATION
(21) Application No.2890/DELNP/2012 A
(19) INDIA
(22) Date of filing of Application :03/04/2012
(43) Publication Date : 24/07/2015

(54) Title of the invention : WIND OR WATER ENERGY INSTALLATION

(51) International classification :F03B
(31) Priority Document No :09 075 430.0
(32) Priority Date :17/09/2009
(33) Name of priority country :EPO
(86) International Application No :PCT/EP2010/005608
Filing Date :30/08/2010
(87) International Publication No : NA
(61) Patent of Addition to Application Number :NA
Filing Date :NA
(62) Divisional to Application Number :NA
Filing Date :NA

(71)**Name of Applicant :**
1)VENPOWER GMBH
Address of Applicant :Auf der Plantage 34 16835 R¼thnick GERMANY
(72)**Name of Inventor :**
1)Peter HEIN

(57) Abstract :
The invention relates to a wind or water energy installation (10) for generating electrical energy said installation comprising at least one propeller (30) and at least one generator (60) comprising a rotor (110) and a stator (500). According to the invention the stator is formed by at least two mechanically and electrically independent stator modules (100) that co-operate respectively with the rotor each of the stator modules respectively comprising at least one module-inherent magnet (130) and at least one coil (140) through which at least part of the magnetic flux of the magnet flows and each of the stator modules forms a module-inherent magnet circuit (120) with the rotor.

No. of Pages : 40 No. of Claims : 15

(12) PATENT APPLICATION PUBLICATION
(21) Application No.3354/DEL/2012 A
(19) INDIA
(22) Date of filing of Application :01/11/2012
(43) Publication Date : 24/07/2015

(54) Title of the invention : DRESS GUARD FOR SMALL VEHICLE

(51) International classification :A47J
(31) Priority Document No :2011-240824
(32) Priority Date :02/11/2011
(33) Name of priority country :Japan
(86) International Application No :NA
Filing Date :NA
(87) International Publication No : NA
(61) Patent of Addition to Application Number :NA
Filing Date :NA
(62) Divisional to Application Number :NA
Filing Date :NA

(71)**Name of Applicant :**
1)SUZUKI MOTOR CORPORATION
Address of Applicant :300, TAKATSUKA-CHO, MINAMI-KU, HAMAMATSU-SHI, SHIZUOKA-KEN 432-8611, JAPAN
(72)**Name of Inventor :**
1)SATO SHOTA

(57) Abstract :
A dress guard for a small vehicle such as a motorcycle is used for a small vehicle which includes a body frame and a pair of left and right seat rails coupled to a rear portion of the body frame and extending rearward, and the dress guard is detachably attached to at least one of the body frame and the seat rails. The dress guard includes a guard body disposed along a flank of a vehicle body of the small vehicle and a bracket joined to an upper end portion of the guard body and detachably coupled to the body frame or the seat rails, wherein the upper end portion of the guard body is bent inward in a body width direction, and an upper end face of the guard body is turned inward in the body width direction.

No. of Pages : 33 No. of Claims : 6

(12) PATENT APPLICATION PUBLICATION
(21) Application No.7192/DELNP/2010 A
(19) INDIA
(22) Date of filing of Application :11/10/2010
(43) Publication Date : 24/07/2015

(54) Title of the invention : A CATALYST SYSTEM AND A PROCESS FOR THE PRODUCTION OF POLYETHYLENE IN THE PRESENCE OF THIS CATALYST SYSTEM •

(51) International classification :C08F4/651
(31) Priority Document No :08004764.0
(32) Priority Date :14/03/2008
(33) Name of priority country :EPO
(86) International Application No :PCT/EP2009/001764
Filing Date :10/03/2009
(87) International Publication No : NA
(61) Patent of Addition to Application Number :NA
Filing Date :NA
(62) Divisional to Application Number :NA
Filing Date :NA

(71)**Name of Applicant :**
1)SAUDI BASIC INDUSTRIES CORPORATION
Address of Applicant :P.O. Box 5101 11422 Riyadh Saudi Arabia
(72)**Name of Inventor :**
1)FRIEDERICHS Nicolaas Hendrika
2)GERLOFSMA Raymond

(57) Abstract :
The invention relates to a catalyst system comprising I. a solid reaction product obtained by reaction of: (a) a hydrocarbon solution comprising (3) an organic oxygen containing magnesium compound or a halogen containing magnesium compound and (4) an organic oxygen containing titanium compound and (b) a mixture comprising a metal compound having the formula MeRnX3-n wherein X is a halogenide, Me is a metal of Group III of Mendeleevs Periodic System of Chemical Elements, R is a hydrocarbon radical containing 1 - 10 carbon atoms and O = n = 3 and a silicon compound of formula RmSiCI4-m wherein 0 = m = 2 and R is a hydrocarbon radical containing 1 - 10 carbon atoms .

No. of Pages : 26 No. of Claims : 15

(12) PATENT APPLICATION PUBLICATION
(21) Application No.2814/DELNP/2012 A
(19) INDIA
(22) Date of filing of Application :02/04/2012
(43) Publication Date : 24/07/2015

(54) Title of the invention : BACTERIAL STRAINS AND VARIANTS THEREOF THAT CAN DEGRADE POLYLACTIC ACID, AND USES OF SAME

(51) International classification :C12R 1/41
(31) Priority Document No :09 56898
(32) Priority Date :02/10/2009
(33) Name of priority country :France
(86) International Application No :PCT/FR2010/052076
Filing Date :01/10/2010
(87) International Publication No :WO 2011/039489
(61) Patent of Addition to Application Number :NA
Filing Date :NA
(62) Divisional to Application Number :NA
Filing Date :NA

(71)**Name of Applicant :**
1)CENTRE NATIONAL DE LA RECHERCHE SCIENTIFIQUE-CNRS -
Address of Applicant :3, RUE MICHEL ANGE, F-75016 PARIS, FRANCE
2)UNIVERSITE DE POITIERS
(72)**Name of Inventor :**
1)FERREIRA, THIERRY
2)AUCHER, WILLY

(57) Abstract :
The invention relates to strains of bacteria of the genus Ochrobactrum, that can degrade polylactic acid. The invention also relates to an enzyme that can degrade polylactic acid, characterized in that it is produced by said bacteria strains according to the invention. The invention also relates to the applications of said bacteria strains and said enzyme that can degrade polylactic acid.

No. of Pages : 21 No. of Claims : 9

(12) PATENT APPLICATION PUBLICATION
(19) INDIA
(22) Date of filing of Application :02/04/2012
(21) Application No.2815/DELNP/2012 A
(43) Publication Date : 24/07/2015

(54) Title of the invention : MANAGING RESOURCES TO FACILITATE ALTERING THE NUMBER OF ACTIVE PROCESSORS

(51) International classification :G06F 1/32
(31) Priority Document No :61/240,872
(32) Priority Date :09/09/2009
(33) Name of priority country :U.S.A.
(86) International Application No :PCT/US2010/048093
Filing Date :08/09/2010
(87) International Publication No :WO 2011/031732
(61) Patent of Addition to Application Number :NA
Filing Date :NA
(62) Divisional to Application Number :NA
Filing Date :NA

(71)**Name of Applicant :**
1)ADVANCED MICRO DEVICES, INC.
Address of Applicant :ONE AMD PLACE,SUNNYVALE, CA 94088, U.S.A.
2)ATI TECHNOLOGIES ULC
(72)**Name of Inventor :**
1)GOTWALT, DAVID
2)KHODORKOVSKY, OLEKSANDR

(57) Abstract :
A method of managing resources is provided. The method includes identifying a resource associated with a processor responsive to an impending transition, and copying the identified resource from a memory associated with the GPU or to the memory associated with the GPU.

No. of Pages : 27 No. of Claims : 20

(12) PATENT APPLICATION PUBLICATION
(19) INDIA
(22) Date of filing of Application :14/11/2014
(21) Application No.3288/DEL/2014 A
(43) Publication Date : 24/07/2015

(54) Title of the invention : POLYESTER COMPOSITIONS

(51) International classification :c08j
(31) Priority Document No :131946637.8
(32) Priority Date :27/11/2013
(33) Name of priority country :EUROPEAN UNION
(86) International Application No :NA
Filing Date :NA
(87) International Publication No : NA
(61) Patent of Addition to Application Number :NA
Filing Date :NA
(62) Divisional to Application Number :NA
Filing Date :NA

(71)**Name of Applicant :**
1)LANXESS DEUTSCHLAND GMBH
Address of Applicant :Kennedyplatz 1, D-50569 Koeln, GERMANY
(72)**Name of Inventor :**
1)TIMO IMMEL
2)JOCHEN ENDTNER
3)MATTHIAS BIENMUELLER

(57) Abstract :
The invention relates to compositions comprising polyethylene terephthalate (PET), poly(l,4-cyclohexanedimethanol terephthalate) (PCT) and titanium dioxide, to the use of 5 these compositions for production of products resistant to heat distortion for short periods, and to a process for producing polyester-based products resistant to heat distortion for short periods, preferably electric or electronic polyester-based products, especially polyester-based optoelectronic products.

No. of Pages : 31 No. of Claims : 16

(12) PATENT APPLICATION PUBLICATION
(21) Application No.653/DEL/2012 A
(19) INDIA
(22) Date of filing of Application :06/03/2012
(43) Publication Date : 24/07/2015

(54) Title of the invention : A SOCIAL COMPUTING SYSTEM.

(51) International classification :G06M
(31) Priority Document No :NA
(32) Priority Date :NA
(33) Name of priority country :NA
(86) International Application No :NA
Filing Date :NA
(87) International Publication No :NA
(61) Patent of Addition to Application Number :NA
Filing Date :NA
(62) Divisional to Application Number :NA
Filing Date :NA

(71)**Name of Applicant :**
1)MAHATTA, PUSHKAR
Address of Applicant :E-10/6, VASANT VIHAR, NEW DELHI India
(72)**Name of Inventor :**
1)MAHATTA, PUSHKAR

(57) Abstract :
The present invention relates to a social computing system which comprises an input channel to receive data from a source channel, a server to store a plurality of data, a processing device to compute said data into a set of output operations. The set of output operations comprise a floating motion of a plurality of users in a network, a means for linking one or more users to a point of interest in said network, a means for linking at least two users in said network and a means for following and physically attaching at least one user in said network. The present invention also relates to a method of social computing.

No. of Pages : 22 No. of Claims : 29

(12) PATENT APPLICATION PUBLICATION
(21) Application No.7224/DELNP/2009 A
(19) INDIA
(22) Date of filing of Application :09/11/2009
(43) Publication Date : 24/07/2015

(54) Title of the invention : LOAD ESTIMATION IN RECEIVER DIVERSITY TELECOMMUNICATION SYSTEMS

(51) International classification :H04B 17/00
(31) Priority Document No :NA
(32) Priority Date :NA
(33) Name of priority country :NA
(86) International Application No :PCT/SE2007/050345
Filing Date :22/05/2007
(87) International Publication No :WO 2008/143562
(61) Patent of Addition to Application Number :NA
Filing Date :NA
(62) Divisional to Application Number :NA
Filing Date :NA

(71)**Name of Applicant :**
1)TELEFONAKTIEBOLAGET LM ERICSSON (PUBL)
Address of Applicant :SE-164 83 STOCKHOLM (SE) Sweden
(72)**Name of Inventor :**
1)WIGREN, KARL TORBJ–RN

(57) Abstract :
Methods and arrangements for providing load reference data in a CDMA wireless communication system with receiver diversity are presented. The method comprises measuring (210) of received total wideband power for more than one receiver branch. Probability distributions for a respective power quantity are estimated (212), related to selected state variables of an estimation algorithm, from quantities representing the measured powers using selected measurement functions of the selected state variables of the estimation algorithm. The selected state variables correspond to cell power quantities and the selected measurement functions correspond to the quantities representing the measured powers. A conditional probability distribution of noise floor measures for the respective branches are computed (214) based on the estimated probability distributions. The method ends with provision (216) of load reference data based on the computed conditional probability distributions of the noise floor measures.

No. of Pages : 76 No. of Claims : 20

(12) PATENT APPLICATION PUBLICATION
(19) INDIA
(22) Date of filing of Application :02/04/2012
(21) Application No.2810/DELNP/2012 A
(43) Publication Date : 24/07/2015

(54) Title of the invention : MULTI-GRANULAR FEEDBACK REPORTING AND FEEDBACK PROCESSING FOR PRECODING IN TELECOMMUNICATIONS

(51) International classification :H04L 1/06
(31) Priority Document No :61/247,589
(32) Priority Date :01/10/2009
(33) Name of priority country :U.S.A.
(86) International Application No :PCT/IB2010/054424
Filing Date :30/09/2010
(87) International Publication No :WO 2011/039725
(61) Patent of Addition to Application Number :NA
Filing Date :NA
(62) Divisional to Application Number :NA
Filing Date :NA

(71)**Name of Applicant :**
1)TELEFONAKTIEBOLAGET LM ERICSSON (PUBL)
Address of Applicant :SE-164 83 STOCKHOLM (SE) Sweden
(72)**Name of Inventor :**
1)JONGREN, GEORGE
2)RAHMAN, MUHAMMAD IMADUR

(57) Abstract :
A communications system comprises a second device (30) and a first device (28). The first device (28) is of a type which receives, on a downlink over a radio interface from a second device, preceded information (29), In an example mode the first device (28) generates a multi- part feedback signal (22) which is configured to affect content of a precoder matrix (40) utilized by the second device (30). On an uplink over the radio interface to the second device, at least two different parts of the multi-part feedback signal are transmitted with two respective different transmission granularities in time and/or frequency.

No. of Pages : 44 No. of Claims : 27

(12) PATENT APPLICATION PUBLICATION
(19) INDIA
(22) Date of filing of Application :02/04/2012
(21) Application No.2811/DELNP/2012 A
(43) Publication Date : 24/07/2015

(54) Title of the invention : POWER CONTROL FOR DEVICES HAVING MULTIPLE ANTENNAS

(51) International classification :H04W 52/32
(31) Priority Document No :61/248,203
(32) Priority Date :02/10/2009
(33) Name of priority country :U.S.A.
(86) International Application No :PCT/US2010/050922
Filing Date :30/09/2010
(87) International Publication No :WO 2011/041555
(61) Patent of Addition to Application Number :NA
Filing Date :NA
(62) Divisional to Application Number :NA
Filing Date :NA

(71)**Name of Applicant :**
1)INTERDIGITAL PATENT HOLDINGS, INC.
Address of Applicant :3411 SILVERSIDE ROAD, CONCORD PLAZA, SUITE 105, HAGLEY BUILDING, WILMINGTON, DELAWARE 19810, USA
(72)**Name of Inventor :**
1)SHIN, SUNG-HYUK
2)STERN-BERKOWITZ, JANET, A.
3)KOO, CHANG-SOO
4)BELURI, MIHAELA, C.

(57) Abstract :
Power control for devices having multiple transmit antennas are disclosed, including power control methods for Physical Uplink Control Channel (PUCCH) and Sounding Reference Signal (SRS) transmissions for a wireless transmit/receive unit (WTRU). The PUCCH and SRS power control methods include selecting a multiple input multiple output (MIMO) mode and changing the power of the PUCCH or SRS transmission based on the selected MIMO mode. Another power control method estimates an antenna gain imbalance (AGI) for a WTRU having at least two transmit antennas. The AGI is based on measuring a Reference Signal Received Power (RSRP) on each transmit antenna. Each transmit antenna is then scaled by an AGI scaling factor based on the estimated AGI.

No. of Pages : 44 No. of Claims : 15

(12) PATENT APPLICATION PUBLICATION
(19) INDIA
(22) Date of filing of Application :02/04/2012
(21) Application No.2812/DELNP/2012 A
(43) Publication Date : 24/07/2015

(54) Title of the invention : DOCUMENT

(51) International classification :G06C
(31) Priority Document No :10 2009 045 544.2
(32) Priority Date :09/10/2009
(33) Name of priority country :Germany
(86) International Application No :PCT/EP2010/064526
Filing Date :30/09/2010
(87) International Publication No :NA
(61) Patent of Addition to Application Number :NA
Filing Date :NA
(62) Divisional to Application Number :NA
Filing Date :NA

(71)**Name of Applicant :**
1)BUNDESDRUCKEREI GMBH
Address of Applicant :ORANIENSTRASSE 91, 10969 BERLIN, GERMANY
(72)**Name of Inventor :**
1)HAMANN, ULRICH
2)PAESCHKE, MANFRED
3)FISCHER, JORG
4)KLOESER, JOACHIM

(57) Abstract :
The invention relates to a document comprising a document body (102) which is constructed from a plurality of document layers (104, 106, 108; 126, 128, 130, 104, 106, 108, 132) arranged on top of each other, wherein a first layer (106) of the document layers contains an evaluation unit (114), a second layer (104) of the document layers contains a first acquisition unit (110) for collecting the first biometric data, a third layer (108) of the document layers contains a second acquisition unit (122) for collecting the second biometric data, and wherein the evaluation unit is connected to the at least first and second acquisition units, in order to receive at least the first and second biometric data from the acquisition units, the evaluation unit being constructed for evaluating the first and second biometric data supplied from the first and second acquisition units, in order to activate a function (116) of the document depending on a result of the evaluation.

No. of Pages : 23 No. of Claims : 14

(12) PATENT APPLICATION PUBLICATION
(21) Application No.7231/DELNP/2009 A
(19) INDIA
(22) Date of filing of Application :09/11/2009
(43) Publication Date : 24/07/2015

(54) Title of the invention : FURNACE

(51) International classification :F23G 5/027
(31) Priority Document No :60/911,006
(32) Priority Date :10/04/2007
(33) Name of priority country :U.S.A.
(86) International Application No :PCT/IB2008/001751
Filing Date :10/04/2008
(87) International Publication No :WO 2008/122896
(61) Patent of Addition to Application Number :NA
Filing Date :NA
(62) Divisional to Application Number :NA
Filing Date :NA

(71)**Name of Applicant :**
1)MENG FANLI
Address of Applicant :7 EAGLE ROAD, EDISON, NEW JERSEY 08820 USA. .
(72)**Name of Inventor :**
1)MENG FANLI

(57) Abstract :
A method and apparatus to batch de-coat the organics in metal scrap, and/or gasify the organics from certain types of waste material (including biomass, municipal solid waste, industrial waste, and sludge). The apparatus is suited for use on a batch tilting single entry rotary furnace of the type used to melt the metal scrap in the aluminium industry. The apparatus uses a burner in the tilting rotary furnace but does not necessarily melt the metal scrap. It preferably operates below the melting temperature of the metal scrap (< 1400 F) and below the stoichiometric level (more specifically < 12% oxygen) to partially combust the organic in the tilting rotary furnace. The gasified organics depart the furnace in a complete closed circuit where no air is allowed to entrain into the flue gases. These organic filled gases (synthetic gases) are fully incinerated in a separate thermal oxidizer where a stoichiometric burner uses either natural gas or liquid fuel to ignite the synthetic gas. The system can identify when the organics are fully gasified, and the metal scrap is fully clean.

No. of Pages : 28 No. of Claims : 34

(12) PATENT APPLICATION PUBLICATION
(19) INDIA
(22) Date of filing of Application :03/04/2012
(21) Application No.2884/DELNP/2012 A
(43) Publication Date : 24/07/2015

(54) Title of the invention : COIL PACKAGING FOR SMOKELESS TOBACCO

(51) International classification :A24F 23/00
(31) Priority Document No :12/576,960
(32) Priority Date :09/10/2009
(33) Name of priority country :U.S.A.
(86) International Application No :PCT/EP2010/006195
Filing Date :11/10/2010
(87) International Publication No :WO 2011/042209
(61) Patent of Addition to Application Number :NA
Filing Date :NA
(62) Divisional to Application Number :NA
Filing Date :NA

(71)**Name of Applicant :**
1)PHILIP MORRIS PRODUCTS S.A.
Address of Applicant :QUAI JEANRENAUD 3, CH-2000 NEUCHATEL (CH) Switzerland
(72)**Name of Inventor :**
1)ADAMS, JOHN, M.
2)HOLLAND, TOMMY, C.

(57) Abstract :
A pocket sized dispenser houses in coiled form a flexible strip of portions (202) of smokeless tobacco sized for placement between a consumers cheek and gum, where the flexible strip includes a base tape (201) removably attached to the plurality of portions (202), and wherein the dispenser and strip are adapted to allow a consumer to separate individual portions (202) from the base tape (201). The individual portions (202) comprise either a collection of tobacco particles at least partially enclosed by a coating comprising a water-soluble non-crosslinked component and a substantially water-insoluble cross-linked component; or pouches attached to the base tape (201) with a food-grade adhesive, the pouches comprising smokeless tobacco enclosed in a water-permeable wrapper with at least one lap-sealed edge. Methods of preparing such are disclosed.

No. of Pages : 32 No. of Claims : 59

(12) PATENT APPLICATION PUBLICATION
(19) INDIA
(22) Date of filing of Application :03/04/2012
(21) Application No.2885/DELNP/2012 A
(43) Publication Date : 24/07/2015

(54) Title of the invention : TURBOMACHINE

(51) International classification :F02C 6/12
(31) Priority Document No :0917513.4
(32) Priority Date :06/10/2009
(33) Name of priority country :U.K.
(86) International Application No :PCT/GB2010/051672
Filing Date :06/10/2010
(87) International Publication No :WO 2011/042739
(61) Patent of Addition to Application Number :NA
Filing Date :NA
(62) Divisional to Application Number :NA
Filing Date :NA

(71)**Name of Applicant :**
1)CUMMINS LTD.
Address of Applicant :ST. ANDREWS ROAD, HUDDERSFIELD HD1 6RA (GB) U.K.
(72)**Name of Inventor :**
1)PARKER, JOHN F.
2)HOLROYD, ROBERT L.
3)ROBERTS, TOM J.
4)MCEWEN, JAMES ALEXANDER
5)DENHOLM, TIM
6)MOORE, SIMON
7)VOONG, MICHAEL
8)NORMINGTON, CHRISTOPHER
9)VIJAYAKUMAR, ARUN
10)GARRETT, STEPHEN

(57) Abstract :
A variable geometry turbine comprising a turbine wheel mounted for rotation about a turbine axis within a housing. The housing defines an annular inlet surrounding the turbine wheel and defined between first and second inlet sidewalls. The turbine further comprises a cylindrical sleeve that is axially movable across the annular inlet to vary the size of a gas flow path through the inlet. The annular inlet is divided into at least two axially offset inlet passages. The inner diameter of the sleeve is greater than the inner diameter of the inlet passages.

No. of Pages : 228 No. of Claims : 58

(12) PATENT APPLICATION PUBLICATION
(21) Application No.3159/DEL/2014 A
(19) INDIA
(22) Date of filing of Application :03/11/2014
(43) Publication Date : 24/07/2015

(54) Title of the invention : WAVEGUIDE CIRCULATOR HAVING STEPPED FLOOR/CEILING AND QUARTER-WAVE DIELECTRIC TRANSFORMER

(51) International classification :h01p
(31) Priority Document No :14/159824
(32) Priority Date :21/01/2014
(33) Name of priority country :U.S.A.
(86) International Application No :NA
Filing Date :NA
(87) International Publication No : NA
(61) Patent of Addition to Application Number :NA
Filing Date :NA
(62) Divisional to Application Number :NA
Filing Date :NA

(71)**Name of Applicant :**
1)HONEYWELL INTERNATIONAL INC.,
Address of Applicant :101 Columbia Road, POB 2245, Morristown, N.J. 07962-2245, USA
(72)**Name of Inventor :**
1)ADAM M. KROENING

(57) Abstract :
In an example, a circulator is discolsed. The circulator a waveguide housing having a plurality of hollow waveguide arms that communicate with a central cavity. The waveguide arms include, and the central cavity is defined by, a floor, a ceiling, and a plurality of sidewalls connected between the floor and the ceiling. At least one of the floor or the ceiling includes at least one step which defines a junction between a first region having a first height between the floor and the ceiling and one or more second regions having a second height between the floor and the ceiling. The first region is proximate the central cavity and the one or more second regions are proximate the waveguide arms. The first height is larger than the second height.

No. of Pages : 41 No. of Claims : 10

(12) PATENT APPLICATION PUBLICATION
(19) INDIA
(22) Date of filing of Application :13/11/2009
(21) Application No.7381/DELNP/2009 A
(43) Publication Date : 24/07/2015

(54) Title of the invention : TESTING VISION

(51) International classification :A61B 3/024
(31) Priority Document No :0709405.5
(32) Priority Date :16/05/2007
(33) Name of priority country :U.K.
(86) International Application No :PCT/GB2008/001480
Filing Date :25/04/2008
(87) International Publication No :WO 2008/139137
(61) Patent of Addition to Application Number :NA
Filing Date :NA
(62) Divisional to Application Number :NA
Filing Date :NA

(71)**Name of Applicant :**
1)UNIVERSITY COURT OF THE UNIVERSITY OF EDINBURGH
Address of Applicant :OLD COLLEGE, SOUTH BRIDGE, EDINBURGH EH8 9YL, GREAT BRITAIN; U.K.
(72)**Name of Inventor :**
1)MURRAY, IAN
2)MINNS, ROBERT
3)FLECK, BRIAN
4)BRASH, HARRY

(57) Abstract :
A system for testing visual fields comprising a display for presenting a visual stimulus and an eye tracker for tracking movement of at least one of a patients eyes to determine its position in three dimensions without requiring the patient to wear any tracking equipment. A computer controls the position of the stimulus on the display and causes it to move by an amount that is a function of the tracked three-dimensional position of the patients eye and a visual field position that is to be tested. Changes to the position of the stimulus and any corresponding tracked eye movement are used to assess the patients visual field.

No. of Pages : 27 No. of Claims : 24

(12) PATENT APPLICATION PUBLICATION
(21) Application No.7383/DELNP/2009 A
(19) INDIA
(22) Date of filing of Application :13/11/2009
(43) Publication Date : 24/07/2015

(54) Title of the invention : ROBOT SYSTEM THAT OPERATES THROUGH A NETWORK FIREWALL

(51) International classification :G06F 19/00
(31) Priority Document No :11/801,491
(32) Priority Date :09/05/2007
(33) Name of priority country :U.S.A.
(86) International Application No :PCT/US2008/005572
Filing Date :30/04/2008
(87) International Publication No :WO 2008/140685
(61) Patent of Addition to Application Number :NA
Filing Date :NA
(62) Divisional to Application Number :NA
Filing Date :NA

(71)**Name of Applicant :**
1)INTOUCH TECHNOLOGIES, INC.
Address of Applicant :90 CASTILIAN DRIVE, SUITE 200, GOLETA, CALIFORNIA 93117, USA. .
(72)**Name of Inventor :**
1)PINTER, MARCO

(57) Abstract :
A remote controlled robot system that includes a robot and a remote control station that communicate through a communication network. Communication with the robot is limited by a firewall coupled to the communication network. A communication server establishes communication between the robot and the remote control station so that the station can send commands to the robot through the firewall.

No. of Pages : 35 No. of Claims : 24

(12) PATENT APPLICATION PUBLICATION
(21) Application No.285/DEL/2015 A
(19) INDIA
(22) Date of filing of Application :31/01/2015
(43) Publication Date : 24/07/2015

(54) Title of the invention : FRAME FOR A DEVICE MOUNTED ABOVE A PRINTED CIRCUIT BOARD IN AN ELECTRONIC DEVICE

(51) International classification :H05K7/00
(31) Priority Document No :05101043.7
(32) Priority Date :11/02/2005
(33) Name of priority country :EPO
(86) International Application No :NA
Filing Date :NA
(87) International Publication No : NA
(61) Patent of Addition to Application Number :NA
Filing Date :NA
(62) Divisional to Application Number :243/DEL/2006
Filed on :30/01/2006

(71)**Name of Applicant :**
1)Research In Motion Limited
Address of Applicant :295 Phillip Street, Waterloo, Ontario N2L 3W8, Canada
(72)**Name of Inventor :**
1)CHEN Chao
2)KYOWSKI Tim
3)GRIFFIN Jason

(57) Abstract :
The invention provides a frame for mounting a device above a printed circuit board (PCB) in an electronic device. The frame comprises: a frame section formed to be located on the PCB about a surface device on a section of the PCB; and a cover for placement on top of the frame section and for providing a support substrate for the device. In the frame, the frame section is securable to the PCB above at least a part of the surface device; the cover is locatable on the fiame section with the device mounted to the cover; and the cover is shaped to allow a feature on the bottom of the device to extend downward towards an interior cavity of the frame.

No. of Pages : 24 No. of Claims : 13

(12) PATENT APPLICATION PUBLICATION
(21) Application No.2850/DELNP/2012 A
(19) INDIA
(22) Date of filing of Application :03/04/2012
(43) Publication Date : 24/07/2015

(54) Title of the invention : ANTITHEFT DEVICE FOR THE STEERING COLUMN OF A VEHICLE PROVIDED WITH A BACKLASH BOLT ACTUATOR

(51) International classification :B60R 25/02
(31) Priority Document No :0905313
(32) Priority Date :05/11/2009
(33) Name of priority country :France
(86) International Application No :PCT/EP2010/065818
Filing Date :20/10/2010
(87) International Publication No :WO 2011/054672
(61) Patent of Addition to Application Number :NA
Filing Date :NA
(62) Divisional to Application Number :NA
Filing Date :NA

(71)**Name of Applicant :**
1)VALEO SECURITE HABITACLE
Address of Applicant :76 RUE AUGUSTE PERRET-ZI EUROPARC, F-94046 CRETEIL CEDEX, FRANCE
(72)**Name of Inventor :**
1)GUILLAUME LESUEUR

(57) Abstract :
An antitheft device (2) for a vehicle steering column, characterized in that it comprises: a bolt (8) which can occupy a position in which it blocks a steering column; and an actuator (18) for maneuvering the bolt, the device being designed in such a way that a displacement of the actuator (18), such that the bolt (8) leaves the blocking position, from a position in which it placed the bolt in the blocking position, begins with dead travel (m) that does not cause the bolt to be displaced.

No. of Pages : 14 No. of Claims : 11

(12) PATENT APPLICATION PUBLICATION
(21) Application No.2851/DELNP/2012 A
(19) INDIA
(22) Date of filing of Application :03/04/2012
(43) Publication Date : 24/07/2015

(54) Title of the invention : SURFACE TREATED STEEL SHEET FOR MANUFACTURING PIPE HAVING CORROSION RESISTANCE AGAINST FUEL VAPORS, PIPE WHICH USES THE STEEL SHEET, AND FUEL SUPPLY PIPE WHICH USES THE STEEL SHEET

(51) International classification :C25D 5/26
(31) Priority Document No :2009-216693
(32) Priority Date :18/09/2009
(33) Name of priority country :Japan
(86) International Application No :PCT/JP2010/005647
Filing Date :16/09/2010
(87) International Publication No :WO 2011/033775
(61) Patent of Addition to Application Number :NA
Filing Date :NA
(62) Divisional to Application Number :NA
Filing Date :NA

(71)**Name of Applicant :**
1)TOYO KOHAN CO., LTD.
Address of Applicant :2-12, YONBAN-CHO, CHIYODA-KU, TOKYO 102-8447, JAPAN
(72)**Name of Inventor :**
1)TATSUO TOMOMORI
2)KOH YOSHIOKA
3)HIDEYUKI MINAGI

(57) Abstract :
Provided is a surface treated steel sheet for manufacturing a pipe having corrosion resistance against fuel vapor of fuel such as gasoline, light oil, bioethanol or bio-diesel fuel, and a pipe and a fuel supply pipe which use the steel sheet. In the surface treated steel sheet for manufacturing a pipe, a layer containing Zn, Co and Mo is formed on a surface of a steel sheet thus having corrosion resistance against fuel vapor. In the pipe, a layer containing Zn, Co and Mo is formed on an inner surface of the pipe formed of a steel sheet thus having corrosion resistance against fuel vapor. In the fuel supply pipe 20 which is formed of a steel sheet for supplying fuel to a fuel tank 23, the fuel supply pipe includes: a large-diameter pipe portion 21 through which the fuel passes; and a small-diameter pipe portion 22 which makes an upper portion of the large-diameter pipe portion and a lower portion of the large-diameter pipe portion communicate with each other for ventilation, and a layer containing Zn, Co and Mo having a plating thickness of 1.0 to 8.0μm is formed on an inner surface of the fuel supply pipe portion.

No. of Pages : 37 No. of Claims : 17

(12) PATENT APPLICATION PUBLICATION
(21) Application No.7374/DELNP/2009 A
(19) INDIA
(22) Date of filing of Application :13/11/2009
(43) Publication Date : 24/07/2015

(54) Title of the invention : A METHOD FOR INDUCING AN IMMUNE RESPONSE

(51) International classification :A61K9/16
(31) Priority Document No :60/566,741
(32) Priority Date :30/04/2004
(33) Name of priority country :U.S.A.
(86) International Application No :PCT/US05/015037
Filing Date :29/04/2005
(87) International Publication No :WO 2005/107802
(61) Patent of Addition to Application Number :NA
Filing Date :NA
(62) Divisional to Application Number :6512/DELNP/2006
Filed on :03/11/2006

(71)**Name of Applicant :**
1)BIOPHERESIS TECHNOLOGIES, INC.
Address of Applicant :400 GALLERIA PARKWAY, SUITE 1950, ATLANTA, GEORGIA 30339, USA. .
(72)**Name of Inventor :**
1)RIGDON M. LENTZ

(57) Abstract :
A method for inducing an immune response in a patient having elevated levels of soluble tumor necrosis factor receptor and soluble interleukin 2 receptor comprising contacting the blood or plasma of a patient in need thereof with an effective amount of binding partners selected from the group consisting of (a) immobilized antibodies or antibody fragments binding to soluble tumor necrosis factor receptor 1, soluble tumor necrosis factor receptor 2, and soluble interleukin 2 receptor and (b) immobilized tumor necrosis factor 1, tumor necrosis factor 2 and interleukin 2, or peptide fragments or synthetic peptides thereof binding to soluble tumor necrosis factor receptor 1, soluble tumor necrosis factor 2 and soluble interleukin 2 receptor, to reduce the levels of the receptors in the blood or plasma.

No. of Pages : 42 No. of Claims : 20

(12) PATENT APPLICATION PUBLICATION
(21) Application No.3299/DEL/2014 A
(19) INDIA
(22) Date of filing of Application :14/11/2014
(43) Publication Date : 24/07/2015

(54) Title of the invention : ROTATING ELECTRIC MACHINE ROTOR

(51) International classification :H01R39/16
(31) Priority Document No :2013-238895
(32) Priority Date :19/11/2013
(33) Name of priority country :Japan
(86) International Application No :NA
Filing Date :NA
(87) International Publication No : NA
(61) Patent of Addition to Application Number :NA
Filing Date :NA
(62) Divisional to Application Number :NA
Filing Date :NA

(71)**Name of Applicant :**
1)TOSHIBA MITSUBISHI-ELECTRIC INDUSTRIAL SYSTEMS CORPORATION
Address of Applicant :3-1-1 Kyobashi, Chuo-ku, Tokyo 104-0031, JAPAN
(72)**Name of Inventor :**
1)LIU Kecheng
2)KONISHI Kazunari
3)MORI Yasushi

(57) Abstract :
A rotating electric machine rotor 10 includes a rotary shaft 11, a rotor core 12 fitted to the rotary shaft 3.1, and a plurality of slots 1.3 formed in an outer peripheral surface of the rotor core 12, the slots 13 each accommodating a rotor bar 14 and each extending in an axial direction of the rotor core 12. A ventilation groove 15 opening to a bottom portion of each of the,slots 13 is formed in the rotor core 12 so as to extend in a length direction of its corresponding slot 13. A plurality of ventilation holes 16 are formed in the rotor bar 14 such that one end each thereof faces the ventilation groove 15 and the other end each thereof communicates with an opening of the slot 13.

No. of Pages : 9 No. of Claims : 1

(12) PATENT APPLICATION PUBLICATION
(19) INDIA
(22) Date of filing of Application :27/08/2009
(21) Application No.5532/DELNP/2009 A
(43) Publication Date : 24/07/2015

(54) Title of the invention : DISPENSING DEVICE FOR VISCOUS MATERIALS

(51) International classification :B67D 5/42
(31) Priority Document No :11/712,103
(32) Priority Date :28/02/2007
(33) Name of priority country :U.S.A.
(86) International Application No :PCT/US2008/055208
Filing Date :28/02/2008
(87) International Publication No :WO 2008/106570
(61) Patent of Addition to Application Number :NA
Filing Date :NA
(62) Divisional to Application Number :NA
Filing Date :NA

(71)**Name of Applicant :**
1)RICH PRODUCTS CORPORATION
Address of Applicant :1150 NIAGARA STREET, BUFFALO, NY 14213 USA. .
(72)**Name of Inventor :**
1)TIRONE CHRISTOPHER, V.
2)FALLER JAMES
3)RUSCH, GERALD A.

(57) Abstract :
A dispensing device having a housing capable of receiving a pre-packaged charge of pre-whipped topping or icing. The housing has an inner wall with a slot formed therein for receiving a rod. The rod engages with a pawl mechanism to move a piston in the axial direction to force the pre-whipped topping or icing through the outlet in its packaging. The pawl engages with the rod when it moves in a first direction and the pawl disengages with the rod when it is moved in a second direction opposite the first direction.

No. of Pages : 15 No. of Claims : 9

(12) PATENT APPLICATION PUBLICATION
(19) INDIA
(22) Date of filing of Application :06/03/2012
(21) Application No.655/DEL/2012 A
(43) Publication Date : 24/07/2015

(54) Title of the invention : MULTI-BALLOON CATHETER FOR EXTRAVASATED DRUG DELIVERY

(51) International classification :B65C
(31) Priority Document No :13/042,901
(32) Priority Date :08/03/2011
(33) Name of priority country :U.S.A.
(86) International Application No :NA
Filing Date :NA
(87) International Publication No :NA
(61) Patent of Addition to Application Number :NA
Filing Date :NA
(62) Divisional to Application Number :NA
Filing Date :NA

(71)**Name of Applicant :**
1)SANOVAS INC.
Address of Applicant :85 LIBERTY SHIP WAY, SUITE 110-B SUASALITO, CA 94965 U.S.A.
(72)**Name of Inventor :**
1)LAWRENCE J. GERRANS
2)ERHAN H. GUNDAY

(57) Abstract :
A method of extravasated delivery of a therapeutic and/or diagnostic agent to tissue is provided including inserting a catheter with a first balloon, a second balloon and a third balloon into a bodily cavity, inflating the first and second balloons by supplying fluid thereto to create a chamber, delivering the agent to the chamber, and increasing fluid pressure within the chamber by inflating the third balloon to facilitate extravasation of the agent into tissue. A multi-balloon catheter system is also provided including a catheter having a first balloon, a second balloon and a third balloon, and a fluid source that inflates the first and second balloons by supplying fluid thereto to create a chamber, wherein the catheter includes a fluid pathway for delivering the agent, and the fluid source increases fluid pressure within the chamber by supplying fluid to the third balloon such that the agent is extravasated into tissue.

No. of Pages : 69 No. of Claims : 50

(12) PATENT APPLICATION PUBLICATION
(19) INDIA
(22) Date of filing of Application :13/11/2009
(21) Application No.7395/DELNP/2009 A
(43) Publication Date : 24/07/2015

(54) Title of the invention : PATIENT-SPECIFIC SURGICAL GUIDANCE TOOL AND METHOD OF USE

(51) International classification :A61B 17/56
(31) Priority Document No :60/917,713
(32) Priority Date :14/05/2007
(33) Name of priority country :U.S.A.
(86) International Application No :PCT/CA2008/000930
Filing Date :14/05/2008
(87) International Publication No :WO 2008/138137
(61) Patent of Addition to Application Number :NA
Filing Date :NA
(62) Divisional to Application Number :NA
Filing Date :NA

(71)**Name of Applicant :**
1)QUEEN'S UNIVERSITY AT KINGSTON
Address of Applicant :C/O QUEEN'S UNIVERSITY, KINGSTON, ONTARIO K7L 3N6, CANADA.
(72)**Name of Inventor :**
1)KUNZ MANUELA
2)RUDAN JOHN F.

(57) Abstract :
Presented is a preoperatively designed guidance tool for intraoperative use during bone or joint surgery wherein the guidance tool is specific to the anatomy of the patient being treated. The guidance tool comprises a body portion, a mating surface provided on the body portion for positioning the guidance tool on a corresponding registration surface of a patients anatomy. The guidance tool further comprises at least one guide mechanism provided on the body portion for guiding a medical instrument at one or more preoperatively defined trajectories relative to a patients anatomy. In the event of misalignment, the at least one guide mechanism is adjustable to alter the one or more preoperatively defined trajectories if necessary during intraoperative use. Also presented is a preoperative process for designing the guidance tool.

No. of Pages : 85 No. of Claims : 73

(12) PATENT APPLICATION PUBLICATION
(21) Application No.2014/DELNP/2012 A
(19) INDIA
(22) Date of filing of Application :06/03/2012
(43) Publication Date : 24/07/2015

(54) Title of the invention : PROCESS FOR PRODUCING 4-ALKYL-2-HALOANILIN COMPOUND OF THE FOLLOWING FORMULA (1)

(51) International classification :C07C 211/52
(31) Priority Document No :2002-142444
(32) Priority Date :17/05/2002
(33) Name of priority country :Japan
(86) International Application No :PCT/JP2003/06157
Filing Date :16/05/2003
(87) International Publication No :WO 2003/097572
(61) Patent of Addition to Application Number :NA
Filing Date :NA
(62) Divisional to Application Number :2731/DELNP/2004
Filed on :16/09/2004

(71)**Name of Applicant :**
1)MEIJI SEIKA KAISHA, LTD.
Address of Applicant :4-16, KYOBASHI 2-CHOME, CHUO-KU, TOKYO-TO, JAPAN
(72)**Name of Inventor :**
1)TOSHIO NISHIZUKA
2)HIROSHI KURIHARA

(57) Abstract :
The process for producing 4-alkyl-2-haloanilin compound of the following formula (1): wherein R1 represents branched chain C3 - C10 alkyl or optionally substituted C3 - C10 cycloalkyl; R2 represents a halogen atom, optionally substituted straight chain or branched chain C1 - C8 alkyl, or optionally substituted C3 - C8 cycloalkyl; R3 represents optionally substituted straight chain or branched chain C1 - C8 alkyl, optionally substituted straight chain or branched chain C2 - C6 alkenyl, or optionally substituted C3 - C8 cycloalkyl; n is an integer of 0 (zero) to 3; and X represents a fluorine and chlorine atom.

No. of Pages : 34 No. of Claims : 4

(12) PATENT APPLICATION PUBLICATION
(19) INDIA
(22) Date of filing of Application :02/04/2012
(21) Application No.2820/DELNP/2012 A
(43) Publication Date : 24/07/2015

(54) Title of the invention : OVERHEAD ADJUSTMENT SCHEME FOR PASSIVE OPTICAL NETWORKS

(51) International classification :H04J 3/06
(31) Priority Document No :NA
(32) Priority Date :NA
(33) Name of priority country :NA
(86) International Application No :PCT/SE2009/051303
Filing Date :18/11/2009
(87) International Publication No :WO 2011/062528
(61) Patent of Addition to Application Number :NA
Filing Date :NA
(62) Divisional to Application Number :NA
Filing Date :NA

(71)**Name of Applicant :**
1)TELEFONAKTIEBOLAGET LM ERICSSON (PUBL)
Address of Applicant :SE-164 83 STOCKHOLM (SE) Sweden
(72)**Name of Inventor :**
1)IN DE BETOU, EINAR
2)DAHLFORT, STEFAN
3)OHLEN, PETER

(57) Abstract :
The present invention relates to a solution for handling large dynamical signals in a passive optical network system and in particular for determining scheduling of bursts from a plurality of optical network units This solution is provided as a method, devices, system and a computer program for determining a bit error ratio, i e BER in received communication data, determining, using the BER, optimized transmission scheduling of communication bursts from the optical network units, and providing a signal to the optical network units indicating the transmission scheduling of transmission bursts in accordance with the determined optimized transmission scheduling.

No. of Pages : 21 No. of Claims : 9

(12) PATENT APPLICATION PUBLICATION
(21) Application No.2821/DELNP/2012 A
(19) INDIA
(22) Date of filing of Application :02/04/2012
(43) Publication Date : 24/07/2015

(54) Title of the invention : SPARK IGNITION TYPE INTERNAL COMBUSTION ENGINE

(51) International classification :F02D 19/06
(31) Priority Document No :NA
(32) Priority Date :NA
(33) Name of priority country :NA
(86) International Application No :PCT/JP2009/070933
Filing Date :09/12/2009
(87) International Publication No :WO 2011/070686
(61) Patent of Addition to Application Number :NA
Filing Date :NA
(62) Divisional to Application Number :NA
Filing Date :NA

(71)**Name of Applicant :**
1)TOYOTA JIDOSHA KABUSHIKI KAISHA
Address of Applicant :1, TOYOTACHO, TOYOTA-SHI, AICHI, 4718571 JAPAN
(72)**Name of Inventor :**
1)AKIHISA DAISUKE

(57) Abstract :
An internal combustion engine which is provided with a variable compression ratio mechanism (A) able to change a mechanical compression ratio and a variable valve timing mechanism (B) able to control a closing timing of an intake valve (7). The expansion ratio is made higher at the time of engine low load operation compared with at the time of engine high load operation. A fuel containing alcohol is used as the fuel, and the expansion ratio at the time of engine low load operation is made to fall when an alcohol concentration in the fuel is high compared with when the alcohol concentration in the fuel is low.

No. of Pages : 48 No. of Claims : 6

(12) PATENT APPLICATION PUBLICATION
(19) INDIA
(22) Date of filing of Application :02/04/2012
(21) Application No.2822/DELNP/2012 A
(43) Publication Date : 24/07/2015

(54) Title of the invention : EXHAUST PURIFICATION SYSTEM OF INTERNAL COMBUSTION ENGINE

(51) International classification :F02D
(31) Priority Document No :NA
(32) Priority Date :NA
(33) Name of priority country :NA
(86) International Application No :PCT/JP2011/066628
Filing Date :14/07/2011
(87) International Publication No :NA
(61) Patent of Addition to Application Number :NA
Filing Date :NA
(62) Divisional to Application Number :NA
Filing Date :NA

(71)**Name of Applicant :**
1)TOYOTA JIDOSHA KABUSHIKI KAISHA
Address of Applicant :1, TOYOTACHO, TOYOTA-SHI, AICHI, 4718571 JAPAN.
(72)**Name of Inventor :**
1)BISAIJI YUKI
2)YOSHIDA KOHEI
3)INOUE MIKIO
4)UMEMOTO KAZUHIRO

(57) Abstract :
In an internal combustion engine, inside of an engine exhaust passage, an upstream side air-fuel ratio sensor (23), a hydrocarbon feed valve (15), an exhaust purification catalyst (13), and a downstream side air-fuel ratio sensor (24) are arranged in this order from the upstream. At the time of engine operation, the injection amount of hydrocarbons from the hydrocarbon feed valve (15) is controlled based on the air-fuel ratio detected by the upstream side air-fuel ratio sensor (23) and the downstream side air-fuel ratio sensor (24) so that the amplitude of change of the concentration of hydrocarbons which flow into the exhaust purification catalyst (13) becomes within a predetermined range of amplitude.

No. of Pages : 88 No. of Claims : 14

(12) PATENT APPLICATION PUBLICATION
(19) INDIA
(22) Date of filing of Application :08/12/2009
(21) Application No.7995/DELNP/2009 A
(43) Publication Date : 24/07/2015

(54) Title of the invention : MOLD INSERT AND MOLD STACK FOR USE WITH MOLDING MACHINE

(51) International classification :B29C 45/73
(31) Priority Document No :11/851,403
(32) Priority Date :07/09/2007
(33) Name of priority country :U.S.A.
(86) International Application No :PCT/CA2008/001389
Filing Date :31/07/2008
(87) International Publication No :WO 2009/030018
(61) Patent of Addition to Application Number :NA
Filing Date :NA
(62) Divisional to Application Number :NA
Filing Date :NA

(71)**Name of Applicant :**
1)HUSKY INJECTION MOLDING SYSTEMS LTD.
Address of Applicant :500 QUEEN STREET SOUTH, BOLTON, ONTARIO L7E 5S5, Canada
(72)**Name of Inventor :**
1)DEREK ROBERTSON McCREADY

(57) Abstract :
Disclosed are a mold stack (100a, 100b, 100c) of a molding machine. A cavity insert(102, 102a) is provided. The cavity insert (102, 102a) comprises a body (104) having: an internal surface (106) defining, in use, at least a body portion (108) of a molding cavity (101); an external surface (110) defining, in use, at least a first portion (112) of a cooling channel (113) configured, in use, to direct a flow of coolant; and a mounting flange (116) configured to support, in use, the body (104) relative to a front face (130) of a cavity plate (190), the mounting flange (116) including a member (124, 124a) configured to define, in use, a second portion (126) of the cooling channel (113).

No. of Pages : 23 No. of Claims : 20

(12) PATENT APPLICATION PUBLICATION
(21) Application No.203/DEL/2014 A
(19) INDIA
(22) Date of filing of Application :22/01/2014
(43) Publication Date : 24/07/2015

(54) Title of the invention : A SYSTEM FOR PERFORMING BENEFICIARY ASSISTED AUDIT

(51) International classification :G06Q
(31) Priority Document No :NA
(32) Priority Date :NA
(33) Name of priority country :NA
(86) International Application No :NA
Filing Date :NA
(87) International Publication No : NA
(61) Patent of Addition to Application Number :
Filed on :01/01/1900
(62) Divisional to Application Number :NA
Filing Date :NA

(71)**Name of Applicant :**
1)ABHYUDAY MISRA
Address of Applicant :432/22, KALA MANKAR, OLD HYDERABAD, LUCKNOW-226007, (U.P) INDIA.
(72)**Name of Inventor :**
1)ABHYUDAY MISRA

(57) Abstract :
In an embodiment of the invention the for performing beneficiary assisted audit by the beneficiaries of such auditable entities.

No. of Pages : 19 No. of Claims : 18

(12) PATENT APPLICATION PUBLICATION
(19) INDIA
(22) Date of filing of Application :03/04/2012
(21) Application No.2863/DELNP/2012 A
(43) Publication Date : 24/07/2015

(54) Title of the invention : SYSTEMS AND METHODS FOR PROCESSING MEMORY REQUESTS

(51) International classification :G06F 3/14
(31) Priority Document No :61/241,203
(32) Priority Date :10/09/2009
(33) Name of priority country :U.S.A.
(86) International Application No :PCT/US2010/048428
Filing Date :10/09/2010
(87) International Publication No :WO 2011/031969
(61) Patent of Addition to Application Number :NA
Filing Date :NA
(62) Divisional to Application Number :NA
Filing Date :NA

(71)**Name of Applicant :**
1)ADVANCED MICRO DEVICES, INC.
Address of Applicant :ONE AMD PLACE, SUNNYVALE, CALIFORNIA 94088 U.S.A.
(72)**Name of Inventor :**
1)ROGERS, PHILIP, J.
2)KRUGER, WARREN, FRIZ
3)HUMMEL, MARK
4)DEMERS, ERIC

(57) Abstract :
A processing system is provided. The processing system includes a first processing unit coupled to a first memory and a second processing unit coupled to a second memory. The second memory comprises a coherent memory and a private memory that is private to the second processing unit.

No. of Pages : 27 No. of Claims : 19

(12) PATENT APPLICATION PUBLICATION
(19) INDIA
(22) Date of filing of Application :03/04/2012
(21) Application No.2864/DELNP/2012 A
(43) Publication Date : 24/07/2015

(54) Title of the invention : TESSELLATION ENGINE AND APPLICATIONS THEREOF

(51) International classification :G06T 17/20
(31) Priority Document No :61/240,921
(32) Priority Date :09/09/2009
(33) Name of priority country :U.S.A.
(86) International Application No :PCT/US2010/048249
Filing Date :09/09/2010
(87) International Publication No :WO 2011/031844
(61) Patent of Addition to Application Number :NA
Filing Date :NA
(62) Divisional to Application Number :NA
Filing Date :NA

(71)**Name of Applicant :**
1)ADVANCED MICRO DEVICES, INC.
Address of Applicant :ONE AMD PLACE, SUNNYVALE, CALIFORNIA 94088 U.S.A.
(72)**Name of Inventor :**
1)GOEL, VINEET
2)CARROLL, JASON, DAVID
3)BUCHNER, BRIAN
4)NIJASURE, MANGESH

(57) Abstract :
Disclosed herein methods, apparatuses, and systems for performing graphics processing. In this regard, a processing unit includes a tessellation module and a connectivity module. The tessellation module is configured to sequentially tessellate portions of a geometric shape to provide a series of tessellation points for the geometric shape. The connectivity module is configured to connect one or more groups of the tessellation points into one or more primitives in an order in which the series of tessellation points is provided.

No. of Pages : 42 No. of Claims : 24

(12) PATENT APPLICATION PUBLICATION
(21) Application No.2865/DELNP/2012 A
(19) INDIA
(22) Date of filing of Application :03/04/2012
(43) Publication Date : 24/07/2015

(54) Title of the invention : METHOD FOR OPERATING AN INTERNAL COMBUSTION ENGINE

(51) International classification :F02D 41/18
(31) Priority Document No :10 2009 047 400.5
(32) Priority Date :02/12/2009
(33) Name of priority country :Germany
(86) International Application No :PCT/EP2010/067477
Filing Date :15/11/2010
(87) International Publication No :WO 2011/067097
(61) Patent of Addition to Application Number :NA
Filing Date :NA
(62) Divisional to Application Number :NA
Filing Date :NA

(71)**Name of Applicant :**
1)ROBERT BOSCH GMBH
Address of Applicant :POSTFACH 30 02 20, 70442 STUTTGART, GERMANY
(72)**Name of Inventor :**
1)KIRSTAETTER, THOMAS
2)MICHALSKE, ANDREAS

(57) Abstract :
Described herein is a method for operating an internal combustion engine (10). The internal combustion engine (10) includes at least one cylinder (11). The at least one cylinder (11) is connected to an exhaust pipe (12) having an air mass sensor (16), an exhaust pipe (13) having an λ-sensor (17), and an exhaust return line (14) having an exhaust return valve (15). The air mass sensor (16) serves to generate an air mass sensor signal (LMsens), the λ-sensor serves to generate a λ-sensor signal (λsens), and the exhaust return valve (15) is set by a setting signal (AGR). The method includes forming a target injection volume (Emsoll); forming the setting signal (AGR) of the exhaust return valve (15) in dependence on the air mass sensor signal (LMsens); and indicating whether the air mass sensor (16) is working correctly or is defective by means of a signal (HMdef). According to the present subject matter, the method further includes forming an air mass replacement signal (LMmod) for the air mass sensor signal (LMsens) in dependence on the λ-sensor signal (λsens) and the target injection volume (EMsoll); and in case of a defective air mass sensor signal (LMsens), forming the setting signal (AGR) in dependence on the air mass replacement signal (LMmod).

No. of Pages : 12 No. of Claims : 9

(12) PATENT APPLICATION PUBLICATION
(21) Application No.9038/DELNP/2010 A
(19) INDIA
(22) Date of filing of Application :17/12/2010
(43) Publication Date : 24/07/2015

(54) Title of the invention : HIGH-EFFICIENCY COMPUTER TOMOGRAPHY

(51) International classification :G06K9/00,
(31) Priority Document No :61/129,459
(32) Priority Date :27/06/2008
(33) Name of priority country :U.S.A.
(86) International Application No :PCT/US2009/049102
Filing Date :29/06/2009
(87) International Publication No : NA
(61) Patent of Addition to Application Number :NA
Filing Date :NA
(62) Divisional to Application Number :NA
Filing Date :NA

(71)**Name of Applicant :**
1)JARISCH Wolfram R.
Address of Applicant :11102 Candlelight Lane Potomac MD 20854 USA. .
(72)**Name of Inventor :**
1)JARISCH Wolfram R.

(57) Abstract :
A system includes transmitters to transmit an excitation energy into an object under observation; detectors to generate projection space data encoding energy received in response to the transmitted excitation energy into the object; a controller to control the transmitters to transmit the excitation energy and the detectors to generate the projection space data; an image reconstructor to receive the projection space data and to process the projection space data by: computing a first quantity characterizing a difference between the projection space data and predicted projection data; computing a second quantity corresponding to at least one impulse response, each impulse response corresponding to a reference voxel of unit-intensity; computing an update value using the first quantity and an inverted function of the second quantity; and reconstructing an object space image representing the object under observation using the update value.

No. of Pages : 33 No. of Claims : 25

(12) PATENT APPLICATION PUBLICATION
(19) INDIA
(22) Date of filing of Application :02/09/2009
(21) Application No.5684/DELNP/2009 A
(43) Publication Date : 24/07/2015

(54) Title of the invention : METHODS AND PLANTS

(51) International classification :C12Q 1/68
(31) Priority Document No :07104386.3
(32) Priority Date :19/03/2007
(33) Name of priority country :EUROPEAN UNION
(86) International Application No :PCT/GB2008/000943
Filing Date :19/03/2008
(87) International Publication No :WO 2008/114000
(61) Patent of Addition to Application Number :NA
Filing Date :NA
(62) Divisional to Application Number :NA
Filing Date :NA

(71)**Name of Applicant :**
1)SUMATRA INVESTMENT CORPORATION PTE. LTD.
Address of Applicant :39 ROBINSON ROAD, #07-01, 068911 SINGAPORE
(72)**Name of Inventor :**
1)NELSON, STEPHEN PETER CONNOR.,
2)DUNWELL, JAMES MARTIN
3)WILKINSON, MICHAEL JAMES
4)CALIGARI, PETER DOUGLAS SAVARIA

(57) Abstract :
The present invention relates to haploid oil palm plants and homozygous doubled haploid oil palm plants. The invention also relates to methods for producing and selecting haploid and doubled haploid plants. More particularly, but not exclusively, the method may be used for selecting haploid and doubled haploid oil palm plants. Haploid and doubled haploid plants are selected by a large-scale screening based on a combination of the phenotype with the use of molecular methods combined with flow cytometry techniques to identify haploid and doubled haploid plants. More particularly, a method for selecting haploid and doubled haploid plants is described comprising: (a) germinating seeds; (b) selecting seedlings with atypical phenotype; (c) assessing heterozygosity using markers; (d) isolating cells from the seedlings and determining the DNA content of the cells; and (e) isolating and purifying the DNA and using defined molecular markers to characterise the genotype of the plant. The haploid oil palm plants may be used for producing homozygous doubled haploid oil palms: doubled haploids may be intercrossed to produce uniform F1 hybrids of superior properties.

No. of Pages : 125 No. of Claims : 29

(12) PATENT APPLICATION PUBLICATION
(19) INDIA
(22) Date of filing of Application :15/10/2009
(21) Application No.6580/DELNP/2009 A
(43) Publication Date : 24/07/2015

(54) Title of the invention : OLIGOMERIC PHOSPHONATE COMPOSITIONS , THEIR PREPARATION AND USES

(51) International classification :C07F 9/40
(31) Priority Document No :60/915,344
(32) Priority Date :01/05/2007
(33) Name of priority country :U.S.A.
(86) International Application No :PCT/US2008/062037
Filing Date :30/04/2008
(87) International Publication No :WO 2008/134733
(61) Patent of Addition to Application Number :NA
Filing Date :NA
(62) Divisional to Application Number :NA
Filing Date :NA

(71)**Name of Applicant :**
1)ALBEMARLE CORPORATION
Address of Applicant :451 FLORIDA STREET, BATON ROUGE, LA 70801-1765, USA
(72)**Name of Inventor :**
1)ARTHUR G. MACK
2)TECHEN TSAO
3)ANNE M. SAUER

(57) Abstract :
This invention provides oligomeric hydrogen phosphonates represented by the formula where R is an alkyl group having one to about six carbon atoms; R is a linear or branched hydrocarbylene group or an oxygen-containing hydrocarbylene group having two to about twenty carbon atoms or a hydrocarbylene group having at least one cycloaliphatic or aromatic ring, where at least one of R is a linear or branched hydrocarbylene group or an oxygen-containing hydrocarbylene group and at least one of R is a hydrocarbylene group having at least one cycloaliphatic or aromatic ring; and n is a number from 2 to about 20. Also provided are processes for making these oligomeric hydrogen phosphonates, oligomeric organophosphonate compositions, and processes for making these oligomeric organophosphonate compositions.

No. of Pages : 25 No. of Claims : 15

(12) PATENT APPLICATION PUBLICATION
(19) INDIA
(22) Date of filing of Application :17/12/2009
(21) Application No.8246/DELNP/2009 A
(43) Publication Date : 24/07/2015

(54) Title of the invention : CABLE ROUTING DEVICE

(51) International classification :H02G 3/04
(31) Priority Document No :0704390
(32) Priority Date :20/06/2007
(33) Name of priority country :France
(86) International Application No :PCT/FR2008/000827
Filing Date :16/06/2008
(87) International Publication No :WO 2009/013399
(61) Patent of Addition to Application Number :NA
Filing Date :NA
(62) Divisional to Application Number :NA
Filing Date :NA

(71)**Name of Applicant :**
1)CQFD COMPOSITES S.A.R.I
Address of Applicant :19, RUE LOUIS GURIEN, F-69100 VILLEURBANNE, FRANCE
(72)**Name of Inventor :**
1)FRANK CHAUZU,
2)RENE CHAUZU

(57) Abstract :
Device for routing cables, more particularly intended for routing and distributing electric cables having an elongated shape (1) with a U-shaped cross-section consisting of an assembly of two side posts (3) forming the arms of the U and of a base (2) forming the bottom of the U. The side posts (3) and the base (2) are substantially made from a composite material and/or a strengthened plastic material and in that at least one side post (3) is pivotally mounted while being jointed to the base (2) about an axis of rotation (30) by at least one hinge (4) and in that it comprises snap-coupling means (35,26,63,7) and abutment means (22,23,38,29,27) capable of locking the side post perpendicularly to said base (2) under the action of its rotation.

No. of Pages : 29 No. of Claims : 14

(12) PATENT APPLICATION PUBLICATION
(21) Application No.657/DEL/2012 A
(19) INDIA
(22) Date of filing of Application :06/03/2012
(43) Publication Date : 24/07/2015

(54) Title of the invention : UNIT DOSAGE DISPENSER

(51) International classification :B60D
(31) Priority Document No :NA
(32) Priority Date :NA
(33) Name of priority country :NA
(86) International Application No :NA
Filing Date :NA
(87) International Publication No : NA
(61) Patent of Addition to Application Number :NA
Filing Date :NA
(62) Divisional to Application Number :NA
Filing Date :NA

(71)**Name of Applicant :**
1)Dharampal Satayapal Ltd.
Address of Applicant :1711 S.P. Mukherjee Marg Delhi - 110006 India.
(72)**Name of Inventor :**
1)Nallan Chakravartula Hari Kishan

(57) Abstract :
The present subject matter relates to a unit dosage dispenser applicable for dispensing a fixed amount of product. The unit dosage dispenser includes a housing chamber for storing the product. The housing chamber includes a product storing area and a product dispensing area partially separated from the product filled area by a divider that ends at a specified height from the base. The unit dosage dispenser includes a gap created by a slope formed by the locking of a bottom barrier with the housing chamber. Further, the unit dosage dispenser 100 is also provided with at least a cap provided on a cap body that snaps fits with the housing chamber. Also, the unit dosage dispenser 100 includes a bottom barrier snapped to the base of the housing chamber to permanently close the housing chamber.

No. of Pages : 19 No. of Claims : 11

(12) PATENT APPLICATION PUBLICATION
(21) Application No.8217/DELNP/2009 A
(19) INDIA
(22) Date of filing of Application :16/12/2009
(43) Publication Date : 24/07/2015

(54) Title of the invention : SILICA PARTICLES AND METHODS OF MAKING AND USING THE SAME

(51) International classification :C12N15/85
(31) Priority Document No :60/933,069
(32) Priority Date :04/06/2007
(33) Name of priority country :U.S.A.
(86) International Application No :PCT/US08/007034
Filing Date :04/06/2008
(87) International Publication No :WO 2008/150537
(61) Patent of Addition to Application Number :NA
Filing Date :NA
(62) Divisional to Application Number :NA
Filing Date :NA

(71)**Name of Applicant :**
1)ALLTECH ASSOCIATES, INC.
Address of Applicant :7500 GRACE DRIVE, COLUMBIA, MD 21044-4098, USA. .
(72)**Name of Inventor :**
1)JAMES NEIL PRYOR
2)LAWRENCE KINDT

(57) Abstract :
Silica particles and compositions containing silica particles are disclosed. Methods of making silica particles and methods of using silica particles are also disclosed.

No. of Pages : 39 No. of Claims : 29

(12) PATENT APPLICATION PUBLICATION
(21) Application No.2868/DELNP/2012 A
(19) INDIA
(22) Date of filing of Application :03/04/2012
(43) Publication Date : 24/07/2015

(54) Title of the invention : WIPER BLADE

(51) International classification :B60S 1/38
(31) Priority Document No :10 2009 045 549.3
(32) Priority Date :09/10/2009
(33) Name of priority country :Germany
(86) International Application No :PCT/EP2010/065056
Filing Date :08/10/2010
(87) International Publication No :WO 2011/042519
(61) Patent of Addition to Application Number :NA
Filing Date :NA
(62) Divisional to Application Number :NA
Filing Date :NA

(71)**Name of Applicant :**
1)ROBERT BOSCH GMBH
Address of Applicant :POSTFACH 30 02 20, 70442 STUTTGART, GERMANY
(72)**Name of Inventor :**
1)DE BLOCK, PETER
2)BONROY, JAN
3)CRIEL, PAUL
4)SAEVELS, PETER
5)AZNAG, MOHAMED
6)BEELEN, HANS
7)WINDMOLDERS, ERIC

(57) Abstract :
The present subject matter describes a wiper blade (12) with a spring-elastic carrier element (36) which is pre-curved concavely with respect to a vehicle window (22) and has at least one spring rail, and a wiper strip (24) which is held by the carrier element (36). The wiper strip (24) is secured relative to the carrier element (36) by an end cap (44) near one end in a longitudinal direction (20). A securing means (56, 58, 66) is provided on the end cap (44) or the flap (46), and can be moved by the activation of the flap (46) with the wiper blade (24) or with an element (120, 124, 128, 132, 136, 142) connected thereto into or out of an operative connection. The securing means (56, 58, 66) is supported in the longitudinal direction (20) on the carrier element (36) or an element (52).

No. of Pages : 31 No. of Claims : 25

(12) PATENT APPLICATION PUBLICATION
(21) Application No.2841/DELNP/2012 A
(19) INDIA
(22) Date of filing of Application :03/04/2012
(43) Publication Date : 24/07/2015

(54) Title of the invention : ROLLING BODY CAGE FOR A BALL BEARING

(51) International classification :F16C 33/42
(31) Priority Document No :10 2009 048 875.8
(32) Priority Date :09/10/2009
(33) Name of priority country :Germany
(86) International Application No :PCT/EP2010/063004
Filing Date :06/09/2010
(87) International Publication No :WO 2011/042270
(61) Patent of Addition to Application Number :NA
Filing Date :NA
(62) Divisional to Application Number :NA
Filing Date :NA

(71)**Name of Applicant :**
1)SCHAEFLER TECHNOLOGIES AG & CO. KG
Address of Applicant :INDUSTRIESTRASSE 1-3, 91074 HERZOGENAURACH, GERMANY
(72)**Name of Inventor :**
1)WOLFGANG FUGEL
2)ALEXANDER REIMCHEN

(57) Abstract :
The invention relates to a rolling body cage for a ball bearing in the form of a ring with receptacles, which are distributed over the circumference, for retaining and guiding the rolling bodies. According to the invention, the receptacles arc formed as cutouts which form spherically curved encircling retaining edges (1) which are matched in each case to the spherical surface of the rolling bodies and at which the rolling bodies can be snapped in in a self-retaining manner in the cutouts such that they can be engaged around by the retaining edges (I).

No. of Pages : 25 No. of Claims : 12

(12) PATENT APPLICATION PUBLICATION
(19) INDIA
(22) Date of filing of Application :03/04/2012
(21) Application No.2842/DELNP/2012 A
(43) Publication Date : 24/07/2015

(54) Title of the invention : SELF-POWERED PUMP FOR HEATED LIQUID AND HEAT DRIVEN LIQUID CLOSE-LOOP AUTOMATIC CIRCULATING SYSTEM EMPLOYING SAME

(51) International classification :F04F 1/14
(31) Priority Document No :2,678,584
(32) Priority Date :08/09/2009
(33) Name of priority country :Canada
(86) International Application No :PCT/CA2010/001297
Filing Date :23/08/2010
(87) International Publication No :WO 2011/029174
(61) Patent of Addition to Application Number :NA
Filing Date :NA
(62) Divisional to Application Number :NA
Filing Date :NA

(71)**Name of Applicant :**
1)W&E INTERNATIONAL (CANADA) CORP.
Address of Applicant :66 DEVONSLEIGH BLVD., RICHMOND HILL, ONTARIO, L4S 1H2, Canada
2)HAUZI LIN
(72)**Name of Inventor :**
1)HAUZI LIN

(57) Abstract :
A heat driven liquid close-loop automatic circulating system is provided. This system circulates the liquid in a close-loop by the collected heat in the loop. The system may operate without external power for the pump. The heat driven liquid close-loop automatic circulating system may employ a modified self-powered pump for heated liquid. The pump includes an airtight container for containing the heated liquid, a inlet and a outlet of the heated liquid, further more the modified self-powered pump has a breathing channel with a liquid vapour condensing and reflux structure. The heat driven liquid close-loop automatic circulating system may be a solar heated liquid close-loop automatic circulating system with a solar heat collector.

No. of Pages : 34 No. of Claims : 34

(12) PATENT APPLICATION PUBLICATION
(19) INDIA
(22) Date of filing of Application :03/04/2012
(21) Application No.2881/DELNP/2012 A
(43) Publication Date : 24/07/2015

(54) Title of the invention : METHOD FOR DATA TRANSMISSION FROM A TRANSMITTER TO A RECEIVER IN AN AC POWER SUPPLY SYSTEM, AND APPARATUS FOR DATA TRANSMISSION WITH AC POWER SUPPLY SYSTEMS

(51) International classification :H04B 3/56
(31) Priority Document No :20 2009 013 154.8
(32) Priority Date :30/09/2009
(33) Name of priority country :Germany
(86) International Application No :PCT/EP2010/064613
Filing Date :30/09/2010
(87) International Publication No :WO 2011/039334
(61) Patent of Addition to Application Number :NA
Filing Date :NA
(62) Divisional to Application Number :NA
Filing Date :NA

(71)**Name of Applicant :**
1)AIZO GROUP AG
Address of Applicant :BRANDSTRASSE 33, CH-8952 SCHLIEREN, SWITZERLAND
(72)**Name of Inventor :**
1)BROCKMANN, ECKHARD
2)BECK, WILFRIED
3)KEMMLER, WOLFGANG
4)DECKERS, VOLKER

(57) Abstract :
The invention relates to a method for the data transmission from an emitter (1) to a receiver (2) in an AC voltage network, comprising a distributor (3) and at least one user group (4) with one or several users (5), wherein the emitter (1) feeds a signal to the AC voltage network by means of a power source (6).

No. of Pages : 30 No. of Claims : 20

(12) PATENT APPLICATION PUBLICATION
(21) Application No.2882/DELNP/2012 A
(19) INDIA
(22) Date of filing of Application :03/04/2012
(43) Publication Date : 24/07/2015

(54) Title of the invention : DEVICE FOR MODIFYING AN AC VOLTAGE, AC VOLTAGE HAVING A SUPERIMPOSED DATA SIGNAL, METHOD FOR DATA TRANSMISSION, USE OF A RECEIVER AND COMMUNICATION ARCHITECTURE

(51) International classification :H02J 13/00
(31) Priority Document No :20 2009 013 154.8
(32) Priority Date :30/09/2009
(33) Name of priority country :Germany
(86) International Application No :PCT/EP2010/005965
Filing Date :30/09/2010
(87) International Publication No :WO 2011/038912
(61) Patent of Addition to Application Number :NA
Filing Date :NA
(62) Divisional to Application Number :NA
Filing Date :NA

(71)**Name of Applicant :**
1)AIZO GROUP AG
Address of Applicant :BRANDSTRASSE 33, CH-8952 SCHLIEREN, SWITZERLAND
(72)**Name of Inventor :**
1)KEMMLER, WOLFGANG
2)TRAMM, MATTHIAS
3)BROCKMANN, ECKHARD
4)TROLLHAGEN, DANIEL
5)BECK, WILFRIED

(57) Abstract :
The invention relates to a device (1) for modifying an AC voltage, wherein the device (1) comprises an input (1) for connecting to an AC voltage source and an output (3) for connecting to a load circuit. The device (1) comprises an interrupter (15) that is designed such that, within at least one time window (35), the output (3) can be disconnected from the AC voltage source, wherein the time window (35) has a time delay (36) from the zero crossing (40) of the voltage of the AC voltage source. At the output (3), the device comprises a terminator (20) that is designed, in particular together with the interrupter (15), such that the voltage at the output (3) of the device (1) has a predefined or predefinable value (37) in the time window (35). Furthermore, the device (1) comprises a pulse shape generator (8) for generating a predetermined or predeterminable pulse shape, and control means (4) that actuate the terminator (20) and the interrupter (15) such that the voltage curve at the output (3) of the device (1) can be modified according to the pulse shape predetermined by the pulse shape generator (8).

No. of Pages : 34 No. of Claims : 17

(12) PATENT APPLICATION PUBLICATION
(19) INDIA
(22) Date of filing of Application :03/04/2012
(21) Application No.2878/DELNP/2012 A
(43) Publication Date : 24/07/2015

(54) Title of the invention : ENGINEERED MICROORGANISMS AND INTEGRATED PROCESS FOR PRODUCING N-PROPANOL, PROPYLENE AND POLYPROPYLENE

(51) International classification :C12P 7/04
(31) Priority Document No :61/240,811
(32) Priority Date :09/09/2009
(33) Name of priority country :U.S.A.
(86) International Application No :PCT/BR2010/000289
Filing Date :09/09/2010
(87) International Publication No :WO 2011/029166
(61) Patent of Addition to Application Number :NA
Filing Date :NA
(62) Divisional to Application Number :NA
Filing Date :NA

(71)**Name of Applicant :**
1)BRASKEM S.A.
Address of Applicant :RUA ETENO, 1561 COMPLEXO PETROQUIMICO DE CAMACARI-BA 42810-000 BRAZIL
2)UNIVERSIDADE ESTADUAL DE CAMPINAS-UNICAMP
(72)**Name of Inventor :**
1)GONCALO AMARANTE GUIMARAES PEREIRA
2)JOHANA RINCONES PEREZ
3)MARCELO FALSARELLA CARAZZOLLE
4)ANE FERNANDA BERALDI ZEIDLER
5)LUCAS PEDERSEN PARIZZI
6)LUIGE ARMANDO LLERENA CALDERON
7)MARIA CAROLINA DE BARROS GRASSI
8)INES LUNARDI
9)LUCIANA GONZAGA DE OLIVEIRA
10)JOSE AUGUSTO ROSARIO RODRIGUES
11)PAULO JOSE SAMENHO MORAN
12)ANTONIO LUIZ RIBEIRO DE CASTRO MORSCHBACKER
13)LUIZA ROZA
14)MARCIO HENRIQUE DOS SANTOS ANDRADE

(57) Abstract :
The invention provides fermentative methods for producing n-propanol. The methods of the invention involve providing a suitable carbon source, a microorganism expressing the dicarboxylic acid pathway, reducing equivalents, and at least one gene coding for an enzyme that catalyzes the conversion of propionate/propionyl-CoA into n-propanol. The methods further involve contacting the carbon source and reducing equivalents with the microorganism under conditions favorable for the production of n-propanol. Also provided are methods for producing propylene and polypropylene from the n-propanol and microorganisms suitable for use in the methods of the invention.

No. of Pages : 114 No. of Claims : 23

(12) PATENT APPLICATION PUBLICATION
(21) Application No.2879/DELNP/2012 A
(19) INDIA
(22) Date of filing of Application :03/04/2012
(43) Publication Date : 24/07/2015

(54) Title of the invention : CARRAGEENAN-CONTAINING AQUEOUS ANTIMICROBIAL COMPOSITIONS

(51) International classification :A61K 9/00
(31) Priority Document No :12/587,405
(32) Priority Date :06/10/2009
(33) Name of priority country :U.S.A.
(86) International Application No :PCT/US2010/051303
Filing Date :04/10/2010
(87) International Publication No :WO 2011/044034
(61) Patent of Addition to Application Number :NA
Filing Date :NA
(62) Divisional to Application Number :NA
Filing Date :NA

(71)**Name of Applicant :**
1)THE POPULATION COUNCIL, INC.
Address of Applicant :ONE DAG HAMMARSKJOLD PLAZA NEW YORK NY 10017 U.S.A.
(72)**Name of Inventor :**
1)MAGUIRE, ROBIN A.
2)THORN, MITCHELL
3)PHILLIPS, DAVID M.
4)RUTENBERG, NAOMI

(57) Abstract :
Disclosed are compositions for inhibiting transmission of a sexually transmitted infection that contain one or more polyanionic microbicides, such as carrageenans, including lambda carrageenan, as well as water-soluble metal salts and specified antiretroviral agents comprising NNRTIs and NRTIs. Also disclosed are methods for making and using the compositions.

No. of Pages : 47 No. of Claims : 21

(12) PATENT APPLICATION PUBLICATION
(21) Application No.5722/DELNP/2009 A
(19) INDIA
(22) Date of filing of Application :04/09/2009
(43) Publication Date : 24/07/2015

(54) Title of the invention : GENETIC VARIANTS CONTRIBUTING TO RISK OF PROSTATE CANCER

(51) International classification :C12Q 1/68
(31) Priority Document No :8604
(32) Priority Date :07/02/2007
(33) Name of priority country :Ice Land
(86) International Application No :PCT/IS08/000003
Filing Date :07/02/2008
(87) International Publication No :WO 2008/096375
(61) Patent of Addition to Application Number :NA
Filing Date :NA
(62) Divisional to Application Number :NA
Filing Date :NA

(71)**Name of Applicant :**
1)DECODE GENETICS EHF,
Address of Applicant :STURLUGATA 8, IS-101 REYKJAVIK, ICELAND.
(72)**Name of Inventor :**
1)JULIUS GUDMUNDSSON
2)PATRICK SULEM

(57) Abstract :
The present invention is characterised by certain genetic variants being susceptibility variants for prostate cancer. The invention relates to methods of determining increased susceptibility to prostate cancer, as well as methods of determining decreased susceptibility to prostate cancer, using such variants. The invention further relates to kits for determining a susceptibility to prostate cancer.

No. of Pages : 157 No. of Claims : 81

(12) PATENT APPLICATION PUBLICATION
(21) Application No.7004/DELNP/2010 A
(19) INDIA
(22) Date of filing of Application :01/10/2010
(43) Publication Date : 24/07/2015

(54) Title of the invention : SEPARATOR HAVING POROUS COATING LAYER AND ELECTROCHEMICAL DEVICE CONTAINING THE SAME

(51) International classification	:H01M2/16, H01M10/36,
(31) Priority Document No	:10-2008-0020206
(32) Priority Date	:04/03/2008
(33) Name of priority country	:Republic of Korea
(86) International Application No	:PCT/KR2009/001033
Filing Date	:03/03/2009
(87) International Publication No	: NA
(61) Patent of Addition to Application Number	:NA
Filing Date	:NA
(62) Divisional to Application Number	:NA
Filing Date	:NA

(71)**Name of Applicant :**
1)LG CHEM LTD.
Address of Applicant :20 Yoido-dong Youngdungpo-gu Seoul 150-721 Republic of Korea
(72)**Name of Inventor :**
1)BAE Yoon-Jung
2)PARK Pil-Kyu
3)KIM Jong-Hwan
4)HAN Dong-Hun
5)LEE Han-Ho
6)LEE Sang-Young
7)YU Ji-Sang
8)JANG Hyun-Min

(57) Abstract :
A separator includes a porous substrate having a plurality of pores; and a porous coating layer formed on at least one surface of the porous substrate and made of a mixture of a plurality of inorganic particles and a binder polymer, wherein the binder polymer includes a first polyvinylidene fluoride-based copolymer having solubility of 25 weight% or more with respect to acetone at 35; a second polyvinylidene fluoride-based copolymer having solubility of 10 weight% or less with respect to acetone at 35; and a polymer having a cyano group. This separator decelerates deterioration of life span of an electrochemical device, and prevents disintercalation of inorganic particles in the porous coating layer, thereby improving safety of the electrochemical device

No. of Pages : 20 No. of Claims : 15

(12) PATENT APPLICATION PUBLICATION
(19) INDIA
(22) Date of filing of Application :07/09/2009
(21) Application No.5755/DELNP/2009 A
(43) Publication Date : 24/07/2015

(54) Title of the invention : AROMATIC URETHANE ACRYLATES HAVING A HIGH REFRACTIVE INDEX

(51) International classification :C08F 2/50
(31) Priority Document No :60/922,988
(32) Priority Date :11/04/2007
(33) Name of priority country :U.S.A.
(86) International Application No :PCT/EP2008/002464
Filing Date :28/03/2008
(87) International Publication No :WO 2008/125199
(61) Patent of Addition to Application Number :NA
Filing Date :NA
(62) Divisional to Application Number :NA
Filing Date :NA

(71)**Name of Applicant :**
1)BAYER MATERIALSCIENCE AG
Address of Applicant :51368 LEVERKUSEN, GERMANY.
(72)**Name of Inventor :**
1)NICOLAS STOECKEL
2)FRIEDRICH-KARL BRUDER
3)JAN WEIKARD
4)NA

(57) Abstract :
The invention relates to novel aromatic urethane (meth)acrylates having a high refractive index, a process for the preparation thereof and a process for the production of holographic media.

No. of Pages : 43 No. of Claims : 12

(12) PATENT APPLICATION PUBLICATION
(21) Application No.5757/DELNP/2009 A
(19) INDIA
(22) Date of filing of Application :07/09/2009
(43) Publication Date : 24/07/2015

(54) Title of the invention : VALVE AND METHOD FOR CONTROLLING FLOW IN TUBULAR MEMBERS

(51) International classification :E21B 34/14
(31) Priority Document No :11/686,596
(32) Priority Date :15/03/2007
(33) Name of priority country :U.S.A.
(86) International Application No :PCT/US08/050210
Filing Date :04/01/2008
(87) International Publication No :WO 2008/112333
(61) Patent of Addition to Application Number :NA
Filing Date :NA
(62) Divisional to Application Number :NA
Filing Date :NA

(71)**Name of Applicant :**
1)BAKER HUGHES INCORPORATED,
Address of Applicant :P.O. BOX 4740, HOUSTON, TX 77210-4740, USA. .
(72)**Name of Inventor :**
1)CRAIG COULL

(57) Abstract :
Further disclosed herein is a method for controlling fluid flow. The method includes, selectively deforming at least one selectively deformable member (22) disposed between two tubular members (14,18) that are radially aligned with one another, at least one of the at least one deformable member being positioned between a fluid inlet (76) and a fluid outlet (84). The method further includes regulating flow of fluid by deforming the at least one deformable member positioned between the fluid inlet and the fluid outlet sufficiently to achieve a desired flow rate.

No. of Pages : 23 No. of Claims : 23

(12) PATENT APPLICATION PUBLICATION
(21) Application No.5758/DELNP/2009 A
(19) INDIA
(22) Date of filing of Application :07/09/2009
(43) Publication Date : 24/07/2015

(54) Title of the invention : SEQUENCE BASED ENGINEERING AND OPTIMIZATION OF SINGLE CHAIN ANTIBODIES

(51) International classification :C07K 16/00
(31) Priority Document No :60/906,365
(32) Priority Date :12/03/2007
(33) Name of priority country :U.S.A.
(86) International Application No :PCT/EP2008/001958
Filing Date :12/03/2008
(87) International Publication No :WO 2008/110348
(61) Patent of Addition to Application Number :NA
Filing Date :NA
(62) Divisional to Application Number :NA
Filing Date :NA

(71)**Name of Applicant :**
1)ESBATECH AG
Address of Applicant :WAGISTRASSE 21, CH-8952 SCHLIEREN, SWITZERLAND.
(72)**Name of Inventor :**
1)DAVID URECH
2)LEONARDO BORRAS

(57) Abstract :
The invention provides methods of using sequence based analysis and rational strategies to modify and improve the structural and biophysical properties of single chain antibodies (scFvs), including stability, solubility, and antigen binding affinity. These methods and strategies can be used individually or in combination. The methods of the present invention also include the use of a database comprising scFv sequences from an experimentally screened scFv library of antibodies that have been selected to have superior solubility and stability. The invention also provides methods of using the properties found for these selected antibodies in a general approach for reshaping scFv antibodies to improve stability and solubility properties of a single chain antibody fragment.

No. of Pages : 72 No. of Claims : 14

(12) PATENT APPLICATION PUBLICATION
(21) Application No.2889/DELNP/2012 A
(19) INDIA
(22) Date of filing of Application :03/04/2012
(43) Publication Date : 24/07/2015

(54) Title of the invention : METHOD AND APPARATUS FOR DETERMINING GATEWAY AND METHOD AND SYSTEM FOR SENDING MESSAGE

(51) International classification :H04N
(31) Priority Document No :200910179925.6
(32) Priority Date :30/09/2009
(33) Name of priority country :China
(86) International Application No :PCT/CN2010/071306
Filing Date :25/03/2010
(87) International Publication No : NA
(61) Patent of Addition to Application Number :NA
Filing Date :NA
(62) Divisional to Application Number :NA
Filing Date :NA

(71)**Name of Applicant :**
1)ZTE CORPORATION
Address of Applicant :ZTE Plaza Keji Road South Hi-Tech Industrial Park Nanshan Shenzhen Guangdong 518057 CHINA
(72)**Name of Inventor :**
1)HUANG Xiang;

(57) Abstract :
The present disclosure discloses a method for determining a multimedia message gateway, comprising: receiving a message of querying a multimedia message gateway sent by a value-added service server after the value-added service server generates a multimedia message; acquiring the service processing situation or resource occupation situation of each multimedia message gateway, determining the multimedia message gateway with the strongest service processing capacity currently according to the service processing situation, or determining the multimedia message gateway with the most residual resource according to the resource occupation situation; and using the determined multimedia message gateway as the multimedia message gateway for sending the multimedia message. The disclosure further discloses a method for sending a multimedia message, an apparatus for determining a multimedia message gateway and a system for sending a multimedia message. The disclosure can solve the problem of traffic imbalance of each multimedia message gateway caused by presetting multimedia message gateways in the prior art.

No. of Pages : 22 No. of Claims : 10

(12) PATENT APPLICATION PUBLICATION
(19) INDIA
(22) Date of filing of Application :13/11/2009
(21) Application No.7390/DELNP/2009 A
(43) Publication Date : 24/07/2015

(54) Title of the invention : TRANSGENIC ANIMALS FOR ASSESSING DRUG METABOLISM AND TOXICITY

(51) International classification :A01K 67/027
(31) Priority Document No :11/757,972
(32) Priority Date :04/06/2007
(33) Name of priority country :U.S.A.
(86) International Application No :PCT/GB2008/001897
Filing Date :04/06/2008
(87) International Publication No :WO 2008/149080
(61) Patent of Addition to Application Number :NA
Filing Date :NA
(62) Divisional to Application Number :NA
Filing Date :NA

(71)**Name of Applicant :**
1)ITI SCOTLAND LIMITED
Address of Applicant :180 ST. VINCENT STREET, GLASCOW, STRATHCLYDE G2 5SG U.K.
(72)**Name of Inventor :**
1)WOLF CHARLES ROLAND
2)SCHEER NICO

(57) Abstract :
The present invention relates to transgenic non-human animals, tissues or cells derived therefrom and methods of producing them. The transgenic non-human animals or tissues or cells derived therefrom provide a system capable of expressing human proteins responsible for drug metabolism in place of the homologous endogenous non-human animal proteins and for the controlled expression of human genes introduced into the animal so that the expression of the human genes is regulated in a manner more closely analogous to that seen in vivo in humans. One aspect of the invention relates to the use of a human DNA sequence comprising at least part of introns 6 and/or 7 of the human PXR gene.

No. of Pages : 279 No. of Claims : 110

(12) PATENT APPLICATION PUBLICATION
(19) INDIA
(22) Date of filing of Application :13/11/2009
(21) Application No.7391/DELNP/2009 A
(43) Publication Date : 24/07/2015

(54) Title of the invention : NITRIDE SEMI-CONDUCTOR COMPONENT LAYER STRUCTURE ON A GROUP IV SUBSTRATE SURFACE

(51) International classification :H01L 21/20
(31) Priority Document No :60/926,444
(32) Priority Date :27/04/2007
(33) Name of priority country :U.S.A.
(86) International Application No :PCT/EP2008/055181
Filing Date :28/04/2008
(87) International Publication No :WO 2008/132204
(61) Patent of Addition to Application Number :NA
Filing Date :NA
(62) Divisional to Application Number :NA
Filing Date :NA

(71)**Name of Applicant :**
1)AZZURRO SEMICONDUCTORS AG
Address of Applicant :UNIVERSITATSPLATZ 2, 39106 MAGDEBURG GERMANY.
(72)**Name of Inventor :**
1)DADGAR ARMIN
2)KROST ALOIS

(57) Abstract :
The invention relates to nitride semiconductor component having a Group III nitride layer structure which is deposited on a substrate having a Group IV substrate surface made of a Group IV substrate material with a cubical crystal structure. The Group IV substrate surface has an elementary cell with C2 symmetry, but not with a higher rotational symmetry than C2 symmetry, when any surface reconstruction is ignored. The Group III nitride layer structure has a seeding layer of ternary or quaternary Al1-x-y-lnxGayN, where O ≤ x, y < 1 and x + y ≤ 1, immediately adjacent to the Group IV substrate surface. High-quality monocrystalline growth is achieved as a result. The advantage of the invention consists in the high level of crystal quality that can be achieved, in the growth of c-, a- and m-plane GaN and above all in the ease with which the silicon substrate can be wholly or partially removed, since this is easier to do in a wet chemical process than on (111)-oriented substrates.

No. of Pages : 27 No. of Claims : 10

(12) PATENT APPLICATION PUBLICATION
(19) INDIA
(22) Date of filing of Application :03/04/2012
(21) Application No.2838/DELNP/2012 A
(43) Publication Date : 24/07/2015

(54) Title of the invention : PICTURE HANGER •

(51) International classification :F16B
(31) Priority Document No :2009/6106
(32) Priority Date :03/09/2009
(33) Name of priority country :South Africa
(86) International Application No :PCT/ZA2010/000052
Filing Date :03/09/2010
(87) International Publication No : NA
(61) Patent of Addition to Application Number :NA
Filing Date :NA
(62) Divisional to Application Number :NA
Filing Date :NA

(71)**Name of Applicant :**
1)POTGIETER BRETT PETER
Address of Applicant :No. 9 35th Avenue Chrystelle Street Six Fountains Silver Lakes 0081 Pretoria South Africa
(72)**Name of Inventor :**
1)POTGIETER BRETT PETER

(57) Abstract :
A device for aiding the mounting of an object on a wall, which device includes: a body shaped and configured to be held in abutment with a wall on which the object is to be mounted; an elongate member which is configured to extend outwardly from the body; a locating means which defines an opening for receiving the elongate member complementally therethrough and to allow displacement of the locating means along a substantially portion of the length of the elongate member; a mounting formation which is configured to extend outwardly the locating means, the mounting formation being configured to permit an object to be mounted on the wall to be mounted thereon; and a retaining means for retaining the locating means in a desired position on the elongate member, the retaining means comprising complementary male-and-female mating formations which are arranged on the elongate member and opening of the locating means.

No. of Pages : 23 No. of Claims : 19

(12) PATENT APPLICATION PUBLICATION
(19) INDIA
(22) Date of filing of Application :03/04/2012
(21) Application No.2839/DELNP/2012 A
(43) Publication Date : 24/07/2015

(54) Title of the invention : ELECTRICAL STEEL SHEET AND METHOD FOR MANUFACTURING THE SAME

(51) International classification :C23C 22/00
(31) Priority Document No :2009-213486
(32) Priority Date :15/09/2009
(33) Name of priority country :Japan
(86) International Application No :PCT/JP2010/065040
Filing Date :02/09/2010
(87) International Publication No :WO 2011/033943
(61) Patent of Addition to Application Number :NA
Filing Date :NA
(62) Divisional to Application Number :NA
Filing Date :NA

(71)**Name of Applicant :**
1)NIPPON STEEL & SUMITOMO METAL CORRORATION
Address of Applicant :6-1, MARUNOUCHI 2-CHOME, CHIYODA-KU, TOKYO 100-8071,JAPAN
(72)**Name of Inventor :**
1)KAZUTOSHI TAKEDA
2)KENJI KOSUGE
3)SATOSHI ARAI
4)KIYOKAZU ISHIZUKA

(57) Abstract :
An electrical steel sheet (10) is provided with a base iron (1) and an insulating film (2) formed on a surface of the base iron (1). The insulating film (2) includes 100 parts by mass of a first component containing a metal phosphate, and 5 parts by mass to 45 parts by mass of a second component composed of particles of one or more kinds selected from a group consisting of a polyolefin wax, an epoxy resin and an acrylic resin, the particles having an average particle size of 2.0 μm to 15.0 μm and a melting point of 60°C to 140°C.

No. of Pages : 51 No. of Claims : 15

(12) PATENT APPLICATION PUBLICATION
(21) Application No.643/DEL/2012 A
(19) INDIA
(22) Date of filing of Application :06/03/2012
(43) Publication Date : 24/07/2015

(54) Title of the invention : MULTI-CHAMBERED TUBE WITH/WITHOUT SEALANT AND MANUFACTURING PROCESS FOR THE SAME

(51) International classification :B64D
(31) Priority Document No :NA
(32) Priority Date :NA
(33) Name of priority country :NA
(86) International Application No :NA
Filing Date :NA
(87) International Publication No :NA
(61) Patent of Addition to Application Number :NA
Filing Date :NA
(62) Divisional to Application Number :NA
Filing Date :NA

(71)**Name of Applicant :**
1)SATPATHY, SMITIPARNA
Address of Applicant :P. SAGAR & CO., 36, I.P. EXTENSION, 43, AJANTA APARTMENT, NEW DELHI-110092. India
(72)**Name of Inventor :**
1)PANDA, KASHMA NIDHI
2)SATPATHY, SMITIPARNA

(57) Abstract :
A multi-chambered tubeless tyre or tube and manufacturing process for the same for vehicles comprising of a master chamber near wheel rim to keeplcontain pressurized aidfluid; at least one chamber sandwiched between said master chamber and inner surface of tyre, said sandwiched charnber(s) hadhave independent one way inlet valve for sealant or pressurized fluidlair as the case may be; said sandwiched chamber(s) are formed and joined in green state with said green tube or green tubeless tyre to achieve mechanical properties after vulcanization. Even independent chamber can be sandwiched between said master chamber and inner surface of tyre. This arrangement can be used in in all kind of vehicles. It can be used in Self Supporting RFT (Run Flat Tyres), Auxiliary Supported RFT. The proposed system can be used for replacement of twin tire in commercial vehicles by providing extra wide tyre with multiple chambers with or without sealant.

No. of Pages : 28 No. of Claims : 15

(12) PATENT APPLICATION PUBLICATION
(21) Application No.7240/DELNP/2009 A
(19) INDIA
(22) Date of filing of Application :09/11/2009
(43) Publication Date : 24/07/2015

(54) Title of the invention : DNA PLASMIDS HAVING IMPROVED EXPRESSION AND STABILITY

(51) International classification :C12N15/63
(31) Priority Document No :NA
(32) Priority Date : -
(33) Name of priority country :
(86) International Application No :PCT/US2007/010547
Filing Date :02/05/2007
(87) International Publication No :NA
(61) Patent of Addition to Application Number :NA
Filing Date :NA
(62) Divisional to Application Number :NA
Filing Date :NA

(71)**Name of Applicant :**
1)MERIAL LIMITED
Address of Applicant :3239 SATELLITE BLVD. DULUTH, GA 30096 USA
(72)**Name of Inventor :**
1)AUDONNET, JEAN-CHRISTOPHE

(57) Abstract :
The present invention relates to compositions and methods to improve expression of exogenous polypeptides, such as an antigen, epitope, immunogen, peptide or polypeptide of interest. More particularly, the present invention provides for DNA plasmids with increased expression and stability in compositions and methods useful for DNA vaccines.

No. of Pages : 77 No. of Claims : 14

(12) PATENT APPLICATION PUBLICATION
(21) Application No.629/DEL/2012 A
(19) INDIA
(22) Date of filing of Application :05/03/2012
(43) Publication Date : 24/07/2015

(54) Title of the invention : AN ESSENTIAL OIL FOR INHIBITION OF METHANE EMISSION IN BUFFALOES (METHANE SUPPRESSOR)

(51) International classification :C07C
(31) Priority Document No :NA
(32) Priority Date :NA
(33) Name of priority country :NA
(86) International Application No :NA
Filing Date :NA
(87) International Publication No :NA
(61) Patent of Addition to Application Number :NA
Filing Date :NA
(62) Divisional to Application Number :NA
Filing Date :NA

(71)**Name of Applicant :**
1)INDIAN COUNCIL OF AGRICULTURAL RESEARCH, NEW DELHI
Address of Applicant :INDIAN COUNCIL OF AGRICULTURAL RESEARCH, KRISHI BHAWAN, DR. RAJENDRA PRASAD ROAD, NEW DELHI - 110114, INDIA.
(72)**Name of Inventor :**
1)DR. DEVKI NANDAN KAMRA
2)DR. MAHESH PAWAR
3)DR. NEETA AGARWAL
4)DR. LAL CHANDRA CHAUDHARY
5)DR. V.B. CHATURVEDI

(57) Abstract :
The Methane suppressor has been developed as a feed additive to reduce methane emission by buffaloes. The additive is mixed with the concentrate mixture just before feeding. The additive is ajwain oil which is available in the market and can be used as such.

No. of Pages : 18 No. of Claims : 6

(12) PATENT APPLICATION PUBLICATION
(21) Application No.99/DEL/2015 A
(19) INDIA
(22) Date of filing of Application :13/01/2015
(43) Publication Date : 24/07/2015

(54) Title of the invention : HIGH PRESSURE FUEL PUMP FOR AN INTERNAL COMBUSTION ENGINE

(51) International classification	:F02M39/02
(31) Priority Document No	:2014-007667
(32) Priority Date	:20/01/2014
(33) Name of priority country	:Japan
(86) International Application No	:NA
Filing Date	:NA
(87) International Publication No	: NA
(61) Patent of Addition to Application Number	:NA
Filing Date	:NA
(62) Divisional to Application Number	:NA
Filing Date	:NA

(71)**Name of Applicant :**
1)SUZUKI MOTOR CORPORATION
Address of Applicant :300 Takatsuka-cho, Minami-ku, Hamamatsu-shi, Shizuoka-ken, JAPAN
(72)**Name of Inventor :**
1)Masahito ASANO

(57) Abstract :
A high pressure fuel pump 16 is configured to include a cylindrical member 21 with a pump chamber having varying volume with different positions of a plunger and a coupling section 28 to which a high pressure fuel line 46 is coupled, wherein..the cylindrical member 21 and the coupling section 28 are covered with a covering member 54, and a rear end of the covering member 54 is located on that side of the coupling section 28 which is near the dash panel 4.

No. of Pages : 37 No. of Claims : 15

(12) PATENT APPLICATION PUBLICATION
(19) INDIA
(22) Date of filing of Application :13/11/2009
(21) Application No.7379/DELNP/2009 A
(43) Publication Date : 24/07/2015

(54) Title of the invention : APPARATUS FOR SUPPORTING CHEMICAL TABLETS

(51) International classification :C02F1/00, C02F1/76
(31) Priority Document No :60/940,828
(32) Priority Date :30/05/2007
(33) Name of priority country :U.S.A.
(86) International Application No :PCT/US2008/006897
Filing Date :29/05/2008
(87) International Publication No :NA
(61) Patent of Addition to Application Number :NA
Filing Date :NA
(62) Divisional to Application Number :NA
Filing Date :NA

(71)**Name of Applicant :**
1)ARCH CHEMICALS, INC.
Address of Applicant :501 MERRITT 7, NORWALK, CONNECTICUT 06856-5204, USA. .
(72)**Name of Inventor :**
1)DAVID W. BLANCHETTE

(57) Abstract :
A chemical feeder (10) for dissolving chemical tablets (40) includes a housing (11) and a plurality of tapered pedestals (60) positioned in the housing for supporting the chemical tablet as the tablet is dissolved by liquid flowing through the feeder. The housing (11) also includes a cup (22) configured to receive a cartridge (50) for holding the tablet; the cup includes inlet and outlet ports (31, 24) for the liquid. The cartridge (50) includes a plate (51) at its lower end; the pedestals (60) are formed on its interior surface. Each pedestal (60) may have a pencil-point shape. When the chemical tablet (40) is installed in the cartridge (50) and the cartridge is installed in the cup (22), the tapered pedestals (60) support the chemical tablet and thereby expose an underside of the tablet to the liquid. The tablet (40) is immersed in the liquid according to the height of the pedestal (60); the dissolution rate of the tablet thus corresponds to the height of the pedestals.

No. of Pages : 28 No. of Claims : 20

(12) PATENT APPLICATION PUBLICATION
(19) INDIA
(22) Date of filing of Application :06/03/2012
(21) Application No.1995/DELNP/2012 A
(43) Publication Date : 24/07/2015

(54) Title of the invention : SYSTEM AND METHOD FOR ENHANCING A WASTEWATER TREATMENT PROCESS

(51) International classification :C02F 3/00
(31) Priority Document No :12/584,545
(32) Priority Date :08/09/2009
(33) Name of priority country :U.S.A.
(86) International Application No :PCT/US2010/002443
Filing Date :07/09/2010
(87) International Publication No :WO 2011/031305
(61) Patent of Addition to Application Number :NA
Filing Date :NA
(62) Divisional to Application Number :NA
Filing Date :NA

(71)**Name of Applicant :**
1)SIEMENS INDUSTRY INC
Address of Applicant :3333 OLD MILTON PARKWAY, 30005 ALPHARETTA, USA
(72)**Name of Inventor :**
1)STEVEN WOODARD
2)PETER G. MARSTON
3)IONEL WECHSLER

(57) Abstract :
A system for enhancing an activated sludge process including at least one biological reactor. A weighting agent impregnation subsystem is coupled to the biological reactor for mixing biological flocs and weighting agent to impregnate the weighting agent into the biological flocs to form weighted biological flocs. A weighting agent recovery subsystem is configured to recover the weighting agent from the weighted biological flocs and reintroducing the recovered weighting agent to the weighting agent impregnation subsystem.

No. of Pages : 49 No. of Claims : 48

(12) PATENT APPLICATION PUBLICATION
(19) INDIA
(22) Date of filing of Application :15/04/2010
(21) Application No.2582/DELNP/2010 A
(43) Publication Date : 24/07/2015

(54) Title of the invention : PREPARATION METHODS OF AZOXYSTROBIN AND ITS ANALOGS •

(51) International classification :C07D239/22, C07C69/76
(31) Priority Document No :200710163386.8
(32) Priority Date :24/10/2007
(33) Name of priority country :China
(86) International Application No :PCT/CN2008/072429
Filing Date :19/09/2008
(87) International Publication No : NA
(61) Patent of Addition to Application Number :NA
Filing Date :NA
(62) Divisional to Application Number :NA
Filing Date :NA

(71)**Name of Applicant :**
1)NUTRICHEM LABORATORY CO. LTD.
Address of Applicant :Building D-1 Zhongguancun Dongsheng Science Park North Territory No.66 Xixiaokou Road Haidian Beijing 100192 CHINA
(72)**Name of Inventor :**
1)LIU Shangzhong
2)MU Canxian
3)WANG Wenjun
4)CHEN Jianwei
5)WANG Shuguang

(57) Abstract :
Preparation method of a compound of general formula (I) comprises the following steps: (1) a compound of general formula (II) reacts with a formylating agent in an aprotic solvent at a temperature between -20ם and 200ם in the presence of a Lewis acid, then an organic base is added to promote the reaction to obtain an intermediate product; (2) the above intermediate product reacts with a methylating agent in the presence of an alkali at a temperature between -20ם and 100ם to obtain the compound of formula (I).

No. of Pages : 14 No. of Claims : 10

(12) PATENT APPLICATION PUBLICATION
(19) INDIA
(22) Date of filing of Application :02/04/2012
(21) Application No.2819/DELNP/2012 A
(43) Publication Date : 24/07/2015

(54) Title of the invention : TURBOMACHINE

(51) International classification :F02C 6/12
(31) Priority Document No :0917513.4
(32) Priority Date :06/10/2009
(33) Name of priority country :U.K.
(86) International Application No :PCT/GB2010/001866
Filing Date :06/10/2010
(87) International Publication No :WO 201/042694
(61) Patent of Addition to Application Number :NA
Filing Date :NA
(62) Divisional to Application Number :NA
Filing Date :NA

(71)**Name of Applicant :**
1)CUMMINS LTD.
Address of Applicant :ST. ANDREWS ROAD, HUDDERSFIELD HD1 6RA (GB) U.K.
(72)**Name of Inventor :**
1)HOLROYD, ROBERT L.
2)ROBERTS, TOM J.
3)PARKER, JOHN F.

(57) Abstract :
A variable geometry turbine comprises a turbine wheel mounted for rotation about a turbine axis within a housing, the housing defining an annular inlet surrounding the turbine wheel and defined between first and second inlet sidewalls; and a cylindrical sleeve axially movable across the annular inlet to vary the size of a gas flow path through the inlet; wherein the annular inlet is divided into at least three axially offset inlet passages by two or more inlet passage walls disposed between the first and second inlet sidewalls.

No. of Pages : 71 No. of Claims : 15

(12) PATENT APPLICATION PUBLICATION
(19) INDIA
(22) Date of filing of Application :30/03/2011
(21) Application No.888/DEL/2011 A
(43) Publication Date : 24/07/2015

(54) Title of the invention : NOVEL PROCESS FOR THE SYNTHESIS OF INDOLINE DERIVATIVES

(51) International classification :C07D209/08
(31) Priority Document No :NA
(32) Priority Date :NA
(33) Name of priority country :NA
(86) International Application No :NA
Filing Date :NA
(87) International Publication No :NA
(61) Patent of Addition to Application Number :NA
Filing Date :NA
(62) Divisional to Application Number :NA
Filing Date :NA

(71)**Name of Applicant :**
1)PANACEA BIOTEC LIMITED
Address of Applicant :B-1, EXTN./A-27, MOHAN CO.OPERATIVE, INDUSTRIAL ESTATE, MATHURA ROAD, NEW DELHI-110044 India
(72)**Name of Inventor :**
1)JAIN, RAJESH
2)MAHENDER RAO SIRIPRAGADA
3)JAGADEESHWAR RAO R.

(57) Abstract :
The present invention provides an improved process for the synthesis of indoline intermediate and its pharmaceutically acceptable derivatives, salts or solvates thereof, useful in the synthesis of α-1 adrenoceptor blockers such as silodosin.

No. of Pages : 52 No. of Claims : 16

(12) PATENT APPLICATION PUBLICATION
(19) INDIA
(22) Date of filing of Application :02/04/2012
(21) Application No.2818/DELNP/2012 A
(43) Publication Date : 24/07/2015

(54) Title of the invention : DAMPER WITH DIGITAL VALVE

(51) International classification :B60G 17/015
(31) Priority Document No :12/573,911
(32) Priority Date :06/10/2009
(33) Name of priority country :U.S.A.
(86) International Application No :PCT/US2010/049813
Filing Date :22/09/2010
(87) International Publication No :WO 2011/043928
(61) Patent of Addition to Application Number :NA
Filing Date :NA
(62) Divisional to Application Number :NA
Filing Date :NA

(71)**Name of Applicant :**
1)TENNECO AUTOMOTIVE OPERATING COMPANY INC.
Address of Applicant :500 NORTH FIELD DRIVE, LAKE FOREST, ILLINOIS 60045 UNITED STATES OF AMERICA
(72)**Name of Inventor :**
1)ROESSLE, MATTHEW L.
2)KAZMIRSKI, KARL C.
3)PAENHUYSEN, JEROEN K.
4)BREESE, DARRELL G.
5)KEIL, DANIEL T
6)MALLIN, THOMAS P.

(57) Abstract :
A shock absorber has a compression valve assembly that provides a high damping load during a compression stroke and an extension valve assembly that provides a high damping load during an extension stroke. One or more digital valve assemblies is positioned to work in parallel with the compression valve assembly and the extension valve assembly to provide a lower damping load. The lowering of the damping load is based upon the cross sectional area of flow passages provided by the one or more digital valve assemblies.

No. of Pages : 54 No. of Claims : 19

(12) PATENT APPLICATION PUBLICATION
(21) Application No.989/DEL/2011 A
(19) INDIA
(22) Date of filing of Application :06/04/2011
(43) Publication Date : 24/07/2015

(54) Title of the invention : AN IMPROVED METHOD FOR OBTAINING METALLIZED CERAMIC PLATES FOR FABRICATION OF THERMOELECTRIC COOLERS FOR HIGH CURRENT APPLICATIONS

(51) International classification :B22C
(31) Priority Document No :NA
(32) Priority Date :NA
(33) Name of priority country :NA
(86) International Application No :NA
Filing Date :NA
(87) International Publication No :NA
(61) Patent of Addition to Application Number :NA
Filing Date :NA
(62) Divisional to Application Number :NA
Filing Date :NA

(71)**Name of Applicant :**
1)DIRECTOR GENERAL, DEFENCE RESEARCH & DEVELOPMENT ORGANISATION
Address of Applicant :MINISTRY OF DEFENCE, GOVT OF INDIA, ROOM NO 348, B-WING, DRDO BHAWAN, RAJAJI MARG, NEW DELHI 110 105 India
(72)**Name of Inventor :**
1)ANUPAMA SINGH
2)MVG PADMAVATI

(57) Abstract :
This invention relates to an improved method for obtaining metallized ceramic plates for fabrication of thermoelectric coolers for high current applications comprising steps of Preparation of top and bottom ceramic substrate with patterned metallization, Placement of stencil on top and bottom ceramic substrate followed by fixing, Application of solder paste on the edge, Positioning of copper pad on each location over the solder paste followed by heating.

No. of Pages : 18 No. of Claims : 7

(12) PATENT APPLICATION PUBLICATION
(21) Application No.167/DEL/2014 A
(19) INDIA
(22) Date of filing of Application :20/01/2014
(43) Publication Date : 24/07/2015

(54) Title of the invention : BATTERY DISENGAGING ASSEMBLY FOR A COMMUNICATION DEVICE

(51) International classification :C10G
(31) Priority Document No :NA
(32) Priority Date :NA
(33) Name of priority country :NA
(86) International Application No :NA
Filing Date :NA
(87) International Publication No : NA
(61) Patent of Addition to Application Number :NA
Filing Date :NA
(62) Divisional to Application Number :NA
Filing Date :NA

(71)**Name of Applicant :**
1)ALCATEL LUCENT
Address of Applicant :3, avenue Octave Grard, 75007 Paris France
(72)**Name of Inventor :**
1)RUSTAGI, Saket
2)GARKOTI, Ravish

(57) Abstract :
A communication device having a battery disengaging assembly is described herein. In one embodiment, the communication device (100) comprises a battery disengaging assembly (102) coupled to a battery (104). The battery disengaging assembly (102) is provided to disengage the battery for interrupting power supply of the communication device (100). Further, the battery disengaging assembly (102) comprises a connecting member (112) coupled to the battery (104) and an activation switch (110) coupled to the connecting member (112) to electrically disengage the battery (104).

No. of Pages : 26 No. of Claims : 15

(12) PATENT APPLICATION PUBLICATION
(19) INDIA
(22) Date of filing of Application :02/04/2012
(21) Application No.2828/DELNP/2012 A
(43) Publication Date : 24/07/2015

(54) Title of the invention : INORGANIC SALT COMPLEXES OF VILDAGLIPTIN

(51) International classification :C07D 207/16
(31) Priority Document No :P0900638
(32) Priority Date :07/10/2009
(33) Name of priority country :Hungary
(86) International Application No :PCT/HU2010/000106
Filing Date :07/10/2010
(87) International Publication No :WO 2011/042765
(61) Patent of Addition to Application Number :NA
Filing Date :NA
(62) Divisional to Application Number :NA
Filing Date :NA

(71)**Name of Applicant :**
1)EGIS GYOGYSZERGYAR NYILVANOSAN MUKODO RESZVENY-TARSASAG
Address of Applicant :KERESZTURI UT 30-38 H-1106 BUDAPEST, HUNGARY
(72)**Name of Inventor :**
1)MRVAVIK ANDRAS
2)KOHEGYI IMRE
3)PONGO LASZLO
4)VOLK BALAZS
5)NEMETH GABOR
6)BARKOCZY JOZSEF
7)NAGY KALMAN
8)RUZSICS GYORGY
9)BRODA JUDIT
10)DANCSO ANDRAS
11)KESZTHELYI ADRIENN
12)DEBRECZENI JOZSEF

(57) Abstract :
The present invention relates to the use of novel vildagliptin complexes for the manufacture of high purity vildagliptin of Formula I and/or pharmaceutical acceptable salts thereof. Further objects of the present invention are pharmaceutically acceptable complexes of vildagliptin and/or amorphous and crystalline forms, anhydrous forms, amorphous and crystalline hydrates, amorphous and crystalline solvates of the complexes and a process for the preparation thereof. Another object of the present invention is the high purity vildagliptin and pharmaceutically acceptable salts thereof prepared form the vildagliptin complexes of the present invention, a process for the preparation thereof and pharmaceutical compositions containing vildagliptin base, pharmaceutically acceptable salts and/or complexes and use thereof for the treatment of type 2 diabetes (NIDDM). The present invention provides pharmaceutically advantageous high purity vildagliptin complexes.

No. of Pages : 49 No. of Claims : 34

(12) PATENT APPLICATION PUBLICATION
(21) Application No.2829/DELNP/2012 A
(19) INDIA
(22) Date of filing of Application :02/04/2012
(43) Publication Date : 24/07/2015

(54) Title of the invention : METHOD FOR DETERMINING, OPTIMISING AND PRODUCING AN OPHTHALMIC LENS AND SET OF OPHTHALMIC LENSES

(51) International classification :G02C 7/02
(31) Priority Document No :FR 09 04 681
(32) Priority Date :01/10/2009
(33) Name of priority country :France
(86) International Application No :PCT/IB2010/054392
Filing Date :29/09/2010
(87) International Publication No :WO 2011/039712
(61) Patent of Addition to Application Number :NA
Filing Date :NA
(62) Divisional to Application Number :NA
Filing Date :NA

(71)**Name of Applicant :**
1)ESSILOR INTERNATIONAL (COMPAGNIE GENERALE D'OPTIQUE)
Address of Applicant :147, RUE DE PARIS, F-94220 CHARENTON- LE -PONT, FRANCE
(72)**Name of Inventor :**
1)GUILLOUX, CYRILL
2)MOUSSET, SOAZIC
3)POULAIN, ISABELLE

(57) Abstract :
The invention relates to a method for determining an ophthalmic lens for a person (i1, i2,i3) to wear said lens, comprising the following steps: i) determination of the size (T1, T2, T3) or height of the eyes (H1, H2, H3) of the person to wear the lens; and ii) calculation of at least one characteristic of the ophthalmic lens according to the size (T1, T2, T3) or the height of the eyes (H1, H2, H3) of the person to wear the lens. The ophthalmic lens can be progressive strength or unifocal. The invention also relates to an optimisation method and a method for producing an ophthalmic lens implementing such a definition method. The invention further relates to a set of lenses having at least one characteristic that depends on the size and the height of the eyes of the person to wear the lens.

No. of Pages : 30 No. of Claims : 17

(12) PATENT APPLICATION PUBLICATION
(19) INDIA
(22) Date of filing of Application :09/11/2009
(21) Application No.7226/DELNP/2009 A
(43) Publication Date : 24/07/2015

(54) Title of the invention : JITTER-BASED MEDIA LAYER ADAPTATION IN REAL-TIME COMMUNICATION SYSTEMS

(51) International classification :H04L 26/06
(31) Priority Document No :NA
(32) Priority Date :NA
(33) Name of priority country :NA
(86) International Application No :PCT/SE2007/000526
Filing Date :30/05/2007
(87) International Publication No :WO 2008/147255
(61) Patent of Addition to Application Number :NA
Filing Date :NA
(62) Divisional to Application Number :NA
Filing Date :NA

(71)**Name of Applicant :**
1)TELEFONAKTIEBOLAGET LM ERICSSON (PUBL)
Address of Applicant :SE-164 83 STOCKHOLM (SE) Sweden
(72)**Name of Inventor :**
1)ENSTR–M, DANIEL
2)FRANKKILA, TOMAS

(57) Abstract :
It is a basic idea to determine (S1) the characteristics of a jitter profile measured over a plurality of packets, and classify (S2) the jitter profile based on the determined characteristics as well as information representative of the particular access used for communication between the sender and the receiver. The classified jitter profile is then matched (S3) to an appropriate action for media layer adaptation so that a proper action for media layer adaptation can be initiated (S4).

No. of Pages : 39 No. of Claims : 29

(12) PATENT APPLICATION PUBLICATION
(21) Application No.2825/DELNP/2012 A
(19) INDIA
(22) Date of filing of Application :02/04/2012
(43) Publication Date : 24/07/2015

(54) Title of the invention : METHOD FOR PRODUCING PREFABRICATED COMPOUND TOWER-SEGMENT UNITS FOR A TOWER OF A WIND PLANT, AND FORMWORK UNIT FOR PRODUCING PREFABRICATED COMPOUND UNITS

(51) International classification :B23B 1/00
(31) Priority Document No :10 2009 049 435.9
(32) Priority Date :14/10/2009
(33) Name of priority country :Germany
(86) International Application No :PCT/EP2010/065284
Filing Date :12/10/2010
(87) International Publication No :WO 2011/045319
(61) Patent of Addition to Application Number :NA
Filing Date :NA
(62) Divisional to Application Number :NA
Filing Date :NA

(71)**Name of Applicant :**
1)WOBBEN ALOYS
Address of Applicant :ARGESTRAE 19, 26607 AURICH, GERMANY.
(72)**Name of Inventor :**
1)HOLSCHER NORBERT
2)STRACKE OLAF

(57) Abstract :
There is provided a process for producing pylon segment precast concrete parts of a pylon of a wind power installation. A shuttering is provided and the shuttering is filled with concrete. A material of low viscosity is applied as an equalization layer to a flange of the precast concrete part.

No. of Pages : 21 No. of Claims : 14

(12) PATENT APPLICATION PUBLICATION
(19) INDIA
(22) Date of filing of Application :09/11/2009
(21) Application No.7232/DELNP/2009 A
(43) Publication Date : 24/07/2015

(54) Title of the invention : PROCESS FOR CONVERTING HYDROCARBON FEEDSTOCKS WITH ELECTROLYTIC RECOVERY OF HALOGEN

(51) International classification :C25B 3/00
(31) Priority Document No :60/930,220
(32) Priority Date :14/05/2007
(33) Name of priority country :U.S.A.
(86) International Application No :PCT/US2008/006244
Filing Date :14/05/2008
(87) International Publication No :WO 2008/143940
(61) Patent of Addition to Application Number :NA
Filing Date :NA
(62) Divisional to Application Number :NA
Filing Date :NA

(71)**Name of Applicant :**
1)GRT, INC.
Address of Applicant :861 WARD DRIVE, SANTA BARBARA, CA 93111, US U.S.A.
(72)**Name of Inventor :**
1)GROSSO, PHILIP
2)MCFARLAND, ERIC W.
3)SHERMAN, JEFFREY H.

(57) Abstract :
An improved continuous process for converting methane, natural gas, and other hydrocarbon feedstocks into one or more higher hydrocarbons, methanol, amines, or other products comprises continuously cycling through hydrocarbon halogenation, product formation, product separation, and electrolytic regeneration of halogen, optionally using an improved electrolytic cell equipped with an oxygen depolarized cathode.

No. of Pages : 51 No. of Claims : 27

(12) PATENT APPLICATION PUBLICATION
(21) Application No.8030/DELNP/2009 A
(19) INDIA
(22) Date of filing of Application :08/12/2009
(43) Publication Date : 24/07/2015

(54) Title of the invention : METHOD AND DEVICE FOR DETERMINING THE ANGLE OF BEARING IN A TACAN TYPE RADIONAVIGATION SYSTEM

(51) International classification :G01S 1/48
(31) Priority Document No :0704114
(32) Priority Date :08/06/2007
(33) Name of priority country :France
(86) International Application No :PCT/EP08/057172
Filing Date :09/06/2008
(87) International Publication No :WO 2008/155252
(61) Patent of Addition to Application Number :NA
Filing Date :NA
(62) Divisional to Application Number :NA
Filing Date :NA

(71)**Name of Applicant :**
1)THALES
Address of Applicant :45, RUE DE VILLIERS, 92200 NEUILLY SUR SEINE, FRANCE
(72)**Name of Inventor :**
1)JULIEN COLLE

(57) Abstract :
A method making it possible to reconstruct a first signal taking the form of a series of pulses of width T, characterized in that said first signal is derived from a revolving beacon and takes the form of a sinusoidal signal. said first signal to be reconstructed is filtered in a first filter (16) at a frequency F1 and in a second filter (17) at a frequency F2, the signal SF1 obtained from the first filter (16) and the signal SF2 obtained from the second filter (17) are transmitted to a summing device (18) then to a device (20) that introduces a delay value x, and in that one or more stages of width T of said first signal to be reconstructed are replaced by a second sinusoidal signal and delayed by adding the delay x to said first signal, by portions of sinusoid of the second delayed sinusoidal signal corresponding to an instant t-1 in order to reconstruct a signal having a sinusoidal shape.

No. of Pages : 15 No. of Claims : 6

(12) PATENT APPLICATION PUBLICATION
(19) INDIA
(22) Date of filing of Application :03/04/2012
(21) Application No.2872/DELNP/2012 A
(43) Publication Date : 24/07/2015

(54) Title of the invention : UNDERFILL RECONGNITION SYSTEM FOR A BIOSENSOR

(51) International classification :G01N 27/416
(31) Priority Document No :61/259,807
(32) Priority Date :10/11/2009
(33) Name of priority country :U.S.A.
(86) International Application No :PCT/US2010/053765
Filing Date :22/10/2010
(87) International Publication No :WO 2011/059670
(61) Patent of Addition to Application Number :NA
Filing Date :NA
(62) Divisional to Application Number :NA
Filing Date :NA

(71)**Name of Applicant :**
1)BAYER HEALTHCARE LLC
Address of Applicant :555 WHITE PLAINS ROAD, TARRYTOWN, NEW YORK 10591, USA. .
(72)**Name of Inventor :**
1)WU HUAN-PING
2)PERRY JOSEPH E.
3)TRIPPEL CHRISTINE
4)MAURER ERIC

(57) Abstract :
A biosensor with an underfill recognition system assesses whether to analyze a sample for one or more analytes in response to the volume of the sample. The underfill recognition system applies polling and test excitation signals to the sample. The polling signals generate one or more polling output signals, which maybe used to detect when a sample is present and to determine whether the sample has sufficient volume for analysis. The test excitation signal generates one or more test output signals, which may be used to determine one or more analyte concentrations in the sample.

No. of Pages : 89 No. of Claims : 71

(12) PATENT APPLICATION PUBLICATION
(19) INDIA
(22) Date of filing of Application :03/04/2012
(21) Application No.2873/DELNP/2012 A
(43) Publication Date : 24/07/2015

(54) Title of the invention : PRESSURE-BASED DIAGNOSTIC SYSTEM FOR PROCESS TRANSMITTER

(51) International classification :G01L 7/08
(31) Priority Document No :NA
(32) Priority Date :NA
(33) Name of priority country :NA
(86) International Application No :PCT/US2009/006007
Filing Date :06/11/2009
(87) International Publication No :WO 2010/042233
(61) Patent of Addition to Application Number :NA
Filing Date :NA
(62) Divisional to Application Number :NA
Filing Date :NA

(71)**Name of Applicant :**
1)ROSEMOUNT INC.
Address of Applicant :12001 TECHNOLOGY DRIVE, EDEN PRAIRIE, MINNESOTA 55344,USA
(72)**Name of Inventor :**
1)HEDTKE ROBERT C.

(57) Abstract :
A process transmitter for measuring a process variable in an industrial process comprises a gauge pressure sensor, an excitation source and transmitter circuitry. The gauge pressure sensor measures a pressure difference between a process fluid and a reference volume, and generates a pressure sensor signal representing the pressure difference. The excitation source generates a pressure pulse within the reference volume to influence generation of the pressure sensor signal. The transmitter circuitry is connected to the gauge pressure sensor to provide an output related to a change in the pressure sensor signal due to the pressure pulse.

No. of Pages : 44 No. of Claims : 39

(12) PATENT APPLICATION PUBLICATION
(19) INDIA
(22) Date of filing of Application :06/03/2012
(21) Application No.651/DEL/2012 A
(43) Publication Date : 24/07/2015

(54) Title of the invention : BRAKE DRUM

(51) International classification :B64D
(31) Priority Document No :2011-048822
(32) Priority Date :07/03/2011
(33) Name of priority country :Japan
(86) International Application No :NA
Filing Date :NA
(87) International Publication No :NA
(61) Patent of Addition to Application Number :NA
Filing Date :NA
(62) Divisional to Application Number :NA
Filing Date :NA

(71)**Name of Applicant :**
1)TPR CO., LTD.
Address of Applicant :6-2, MARUNOUCHI 1-CHOME, CHIYODA-KU, TOKYO 100-0005, JAPAN
2)TPR INDUSTRY CO., LTD.
(72)**Name of Inventor :**
1)SHINGO OZAWA
2)TAKAHIRO NOBE

(57) Abstract :
A brake drum which can improve the drag strength, strength and rigidity in the diametrical direction, joint strength, and heat radiating ability, that is, a brake drum which is used for a drum brake, wherein the drum has a plurality of the projections at the outer circumferential surface, the plurality of the projections are formed at the outer circumferential surface as a whole when casting a brake drum, and at least part of the projections have thin-waisted shapes. A height of the projections is 0.3 to 5.0 mm, while the number of projections is 5 to 100/cm2- The brake drum is produced by centrifugal casting.

No. of Pages : 12 No. of Claims : 5

(12) PATENT APPLICATION PUBLICATION
(21) Application No.7335/DELNP/2010 A
(19) INDIA
(22) Date of filing of Application :18/10/2010
(43) Publication Date : 24/07/2015

(54) Title of the invention : COMPLEX IMPLANTS INFILTERATED WITH BIODEGRADABLE MG (ALLOYS) INSIDE POROUS STRUCTURAL MATERIALS AND METHOD FOR MANUFACTURING THE SAME

(51) International classification	:B29C65/00, A61B17/80,
(31) Priority Document No	:10-2008-0024801
(32) Priority Date	:18/03/2008
(33) Name of priority country	:Republic of Korea
(86) International Application No	:PCT/KR2009/001361
Filing Date	:18/03/2009
(87) International Publication No	: NA
(61) Patent of Addition to Application Number	:NA
Filing Date	:NA
(62) Divisional to Application Number	:NA
Filing Date	:NA

(71)**Name of Applicant :**
1)U & I Corporation
Address of Applicant :529-1 Yonghyeon-dong Uijeongbu-si Gyeonggi-do 480-050 Republic of Korea
(72)**Name of Inventor :**
1)SEOK Hyun-Kwang
2)YANG Seok-Jo
3)KIM Yu-Chan
4)KOO Ja-Kyo

(57) Abstract :
The present invention provides a composite implant comprising pores of a porous structure filled with a biodegradable magnesium-based alloy. Further, the present invention provides a composite implant which fillies pores of the porous structure prepared by a metal, a ceramic or a polymer with a biodegradable magnesium-based alloy. Mechanical properties of the composite implant of the present invention are improved because a magnesium-based alloy filled in its pores increases the strength of a porous structure comprised of a metal, a ceramic or a polymer. Further, it can be expected that the magnesium-based alloy filled in the porous structure is decomposed in a living body, thus increasing bone formation rate. Accordingly bone tissue can be rapidly formed because the composite implant of the present invention has high strength and excellent interfacial force between the composite implant and bone tissue, compared to conventional porous materials.

No. of Pages : 21 No. of Claims : 11

(12) PATENT APPLICATION PUBLICATION
(21) Application No.642/DEL/2012 A
(19) INDIA
(22) Date of filing of Application :06/03/2012
(43) Publication Date : 24/07/2015

(54) Title of the invention : HOLLOW CRANKSHAFT FOR TRACTOR/CONSTRUCTION EQUIPMENT

(51) International classification :B64D
(31) Priority Document No :NA
(32) Priority Date :NA
(33) Name of priority country :NA
(86) International Application No :NA
Filing Date :NA
(87) International Publication No :NA
(61) Patent of Addition to Application Number :NA
Filing Date :NA
(62) Divisional to Application Number :NA
Filing Date :NA

(71)**Name of Applicant :**
1)ESCORTS LIMITED
Address of Applicant :AGRI MACHINERY GROUP, 18/4,MATHURA ROAD, FARIDABAD-121007, Haryana India
(72)**Name of Inventor :**
1)MUKESH SHAMRAO DADGE

(57) Abstract :
This invention relates to hollow crankshaft for tractor/construction equipment comprising of a hollow crankshaft, wherein a journal part and/or a pin part is provided with hollow section together with the oil holes. Further, this invention also relates to a method of manufacturing hollow crankshaft for tractor/construction equipment comprising steps of: casting hole in the crankshaft, forming of oil holes in the journal part and pin part by casting with the core and forming of hollow section of an arm part.

No. of Pages : 9 No. of Claims : 11

(12) PATENT APPLICATION PUBLICATION
(19) INDIA
(22) Date of filing of Application :15/10/2009
(21) Application No.6590/DELNP/2009 A
(43) Publication Date : 24/07/2015

(54) Title of the invention : TOOL FOR IMPROVED CHIP FLOW

(51) International classification :B23F 21/22
(31) Priority Document No :60/928,611
(32) Priority Date :10/05/2007
(33) Name of priority country :U.S.A.
(86) International Application No :PCT/US2008/005870
Filing Date :07/05/2008
(87) International Publication No :WO 2008/140723
(61) Patent of Addition to Application Number :NA
Filing Date :NA
(62) Divisional to Application Number :NA
Filing Date :NA

(71)**Name of Applicant :**
1)THE GLEASON WORKS
Address of Applicant :1000 UNIVERSITY AVENUE, P.O. BOX 22970, ROCHESTER, NEW YORK 14692-2970, USA
(72)**Name of Inventor :**
1)HERMANN J. STADTFELD
2)ALAN E. VOSSLER

(57) Abstract :
A manner of reducing or eliminating chip packing in gear cutting tools, especially in bevel gear cutting tools wherein the back surfaces (Dl) of at least some cutting blades are modified by the introduction of a rake angled surface (D2) and/or a hook angled surface (D3) thereby resulting in an opening-up of the gap (86) between successive cutting blades in a direction radially or axially away from the cutting tool. Such an opening-up facilitates the removal of chips from between the cutting blades as the cutting tool rotates during cutting.

No. of Pages : 26 No. of Claims : 9

(12) PATENT APPLICATION PUBLICATION
(19) INDIA
(22) Date of filing of Application :03/04/2012
(21) Application No.2859/DELNP/2012 A
(43) Publication Date : 24/07/2015

(54) Title of the invention : MILLIMIETER-WAVE COMMUNICATION STATION AND METHOD FOR MULTIPLE-ACCESS BEAMFORMING IN A MILLIMETER-WAVE COMMUNICATION NETWORK

(51) International classification :H04B 7/04
(31) Priority Document No :12/574,140
(32) Priority Date :06/10/2009
(33) Name of priority country :U.S.A.
(86) International Application No :PCT/US2010/048724
Filing Date :14/09/2010
(87) International Publication No :WO 2011/043901
(61) Patent of Addition to Application Number :NA
Filing Date :NA
(62) Divisional to Application Number :NA
Filing Date :NA

(71)**Name of Applicant :**
1)INTEL CORPORATION
Address of Applicant :2200 MISSION COLLEGE BOULEVARD, SANTA CLARA, CALIFORNIA 95052, U.S.A.
(72)**Name of Inventor :**
1)CORDEIRO, CARLOS
2)KASHER, ASSAF
3)TRAININ, SOLOMON, B.

(57) Abstract :
Embodiments of a millimeter-wave communication station and method for multiple-access beamforming in a millimeter-wave network are generally described herein. In some embodiments, an initiating station performs multiple-access beamforming with one or more responding stations by announcing a number of sector-sweep (SS) slots of a beamforming training (BFT) period and a number of SS frames of each SS slot. One or more SS frames are received from one or more of the responding stations within one of the SS slots of the BFT period. The initiating station transmits one or more SS feedback frames to the responding stations within the one SS slot to indicate an antenna configuration to the responding stations for communication with the initiating station. The responding stations transmit a limited number of SS frames per SS slot based on the number of SS frames announced by the initiating station and transmit any additional SS frames in a next SS slot of the beamforming training period. Each SS frame contains an indication to the initiating station of an antenna configuration for communication with the responding station.

No. of Pages : 26 No. of Claims : 25

(12) PATENT APPLICATION PUBLICATION
(21) Application No.5670/DELNP/2009 A
(19) INDIA
(22) Date of filing of Application :02/09/2009
(43) Publication Date : 24/07/2015

(54) Title of the invention : SUBSTITUTED HETEROCYCLE FUSED GAMMA-CARBOLINES SYNTHESIS

(51) International classification :C07D 471/00
(31) Priority Document No :60/906,473
(32) Priority Date :12/03/2007
(33) Name of priority country :U.S.A.
(86) International Application No :PCT/US08/003340
Filing Date :12/03/2008
(87) International Publication No :WO 2008/112280
(61) Patent of Addition to Application Number :NA
Filing Date :NA
(62) Divisional to Application Number :NA
Filing Date :NA

(71)**Name of Applicant :**
1)INTRA-CELLULAR THERAPIES, INC.
Address of Applicant :3690 BROADWAY, NEW YORK NEW YORK 10032, USA. .
(72)**Name of Inventor :**
1)JOHN CHARLES TOMESCH
2)PENG LI
3)WEI YAO
4)QIANG ZHANG
5)JAMES DAVID BEARD
6)ANDREW S. THOMPSON
7)HUA CHENG

(57) Abstract :
The present invention provides methods for the preparation of substituted heterocycle fused gamma-carbolines, intermediates useful in producing them and methods for producing such intermediates and such heterocycl fused gamma-carbolines.

No. of Pages : 178 No. of Claims : 170

(12) PATENT APPLICATION PUBLICATION
(19) INDIA
(22) Date of filing of Application :07/09/2009
(21) Application No.5762/DELNP/2009 A
(43) Publication Date : 24/07/2015

(54) Title of the invention : SYSTEM AND METHOD FOR INTERLOCKING TO PROTECT SOFTWARE-MEDIATED PROGRAM AND DEVICE BEHAVIOURS

(51) International classification :G06F 21/22
(31) Priority Document No :11/709,654
(32) Priority Date :23/02/2007
(33) Name of priority country :U.S.A.
(86) International Application No :PCT/CA2008/000333
Filing Date :21/02/2008
(87) International Publication No :WO 2008/101341
(61) Patent of Addition to Application Number :NA
Filing Date :NA
(62) Divisional to Application Number :NA
Filing Date :NA

(71)**Name of Applicant :**
1)CLOAKWARE CORPORATION
Address of Applicant :84 HINES ROAD, SUITE 300, OTTAWA, ONTARIO K2K 3G3, CANADA.
(72)**Name of Inventor :**
1)JOHNSON, HAROLD JOSEPH
2)GU, YUAN XIANG
3)ZHOU, YONGXIN

(57) Abstract :
A method for rendering software resistant to reverse engineering. Replace at least one first constant (mathematical expression, etc.) in a computational expression with a second mixed mathematical and bitwise-Boolean expression, the first constant being simpler than the second expression and the second expression being based on the value or the variables found in the first constant (or expression). Evaluation of the second mixed mathematical and bitwise-Boolean expression produces a value preserving the value of the first constant, either: with the original value of the first constant or the original value of the result of the first expression, in which case the second mixed mathematical and bitwise-Boolean expression is obtained from the first constant by converting the first constant by mathematical identities; or, in an encoded form, as a new value, which can be converted back to the original value of the first constant by applying an information-preserving decoding function, in which case the second mixed mathematical and bitwise-Boolean expression is obtained from the first constant by modifying the first constant by a combination of conversion according to mathematical identities and transformation according to an information preserving encoding function.

No. of Pages : 140 No. of Claims : 21

(12) PATENT APPLICATION PUBLICATION
(21) Application No.1624/MUM/2013 A
(19) INDIA
(22) Date of filing of Application :06/11/2013
(43) Publication Date : 24/07/2015

(54) Title of the invention : USE OF EXHAUST GASES OF JET ENGINE

(51) International classification	:F01D5/14, F02K3/062
(31) Priority Document No	:NA
(32) Priority Date	:NA
(33) Name of priority country	:NA
(86) International Application No	:NA
Filing Date	:NA
(87) International Publication No	: NA
(61) Patent of Addition to Application Number	:NA
Filing Date	:NA
(62) Divisional to Application Number	:NA
Filing Date	:NA

(71)**Name of Applicant :**
1)PAWAR PRASHANT R
Address of Applicant :A/T - KUSUR, TAL - KARAD, DIST - SATARA 415103, MAHARASHTRA India
(72)**Name of Inventor :**
1)PAWAR PRASHANT R

(57) Abstract :
THE INVENTION USES OF EXHAUST GASES OF JET ENGINE IS RELATED WITH AUTOMOBILE ENGINEERING , MECHANICAL ENGINEERING, POWER ENGINEERING ELECTRICAL ENGINEERING , HYBRID ENGINEERING AND ELECTROLYSIS PROCESS AND ENVIRONMENT SAFETY AND GLOBAL WARMING TOO. THEN MAIN TECHNICAL PROBLEM OF CONVENTIONAL INTERNAL COMBUSTION ENGINE IS THAT THEY ARE LESS FUEL EFFICIENT AND ENGINE POWER GET CONSUME BECAUSE OF IN CASE ALTERNATOR 6 OR ALTERNATOR 55 OR DYNAMO 72 DRIVEN BY ANY TYPE OF IC ENGINE , PRODUCE TOXIC EXHAUST GASES TOO. TO OVERCOME FROM THESE ABOVE MENTIONED PROBLEM OF ANY TYPE OF IC ENGINE I INVENTED THE CONCEPT OF THE TURBO ELECTRICITY AND TURBO ELECTROLYSIS PROCESS OF INTERNAL COMBUSTION ENGINE . BY USING MY INVENTION ANY TYPE OF IC ENGINE GET BEST MILEAGE AND ANY TYPE OF IC ENGINE MAKE ECO FRIENDLY.

No. of Pages : 61 No. of Claims : 10

(12) PATENT APPLICATION PUBLICATION
(19) INDIA
(22) Date of filing of Application :06/11/2014
(21) Application No.2247/MUMNP/2014 A
(43) Publication Date : 24/07/2015

(54) Title of the invention : A FOOD COOKING DEVICE AN ELECTRONIC LIBRARY AND METHODS RELATED THERETO

(51) International classification :A47J27/12,A47J27/62,F24C7/08
(31) Priority Document No :1250577-2
(32) Priority Date :04/06/2012
(33) Name of priority country :Sweden
(86) International Application No :PCT/SE2013/050435
Filing Date :23/04/2013
(87) International Publication No :WO 2013/184058
(61) Patent of Addition to Application Number :NA
Filing Date :NA
(62) Divisional to Application Number :NA
Filing Date :NA

(71)**Name of Applicant :**
1)BBBL INNOVATION AB
Address of Applicant :Munkbron 11 S 111 28 Stockholm Sweden
(72)**Name of Inventor :**
1)LAGERL–F Johan

(57) Abstract :
The invention relates to a food cooking device (300) having a plurality of heating means (301 a 301 d) for heating a respective food item. The device is provided with control means (302) arranged to individually control energy supply to each of the heating means (301 a 301 d). According to the invention the device (300) includes a microprocessor (303) with downloading means (304) arranged to download a set of food cooking process data. The control means (302) is arranged to control the energy supply in response to the downloaded set of food cooking process data. The invention also relates to an electronic library (600) having a plurality of information units which are arranged to be downloadable from external users. According to this aspect of the invention each information unit includes a set of food cooking process data. Each set includes at least two food item cooking instructions. Each food item instruction includes data defining a food item and one or more groups of operation parameters. Each group of operation parameters includes energy supply data and related time duration data for heating means in a cooking device. The invention also relates to a method for cooking food and to a method for providing food cooking support.

No. of Pages : 32 No. of Claims : 25

(12) PATENT APPLICATION PUBLICATION
(19) INDIA
(22) Date of filing of Application :06/11/2014
(21) Application No.2248/MUMNP/2014 A
(43) Publication Date : 24/07/2015

(54) Title of the invention : OPHTHALMIC COMPOSITIONS WITH IMPROVED DESSICATION PROTECTION AND RETENTION

(51) International classification :A61K9/08,A61K47/02,A61K47/10
(31) Priority Document No :61/642,901
(32) Priority Date :04/05/2012
(33) Name of priority country :U.S.A.
(86) International Application No :PCT/US2013/039487
Filing Date :03/05/2013
(87) International Publication No :WO 2013/166399
(61) Patent of Addition to Application Number :NA
Filing Date :NA
(62) Divisional to Application Number :NA
Filing Date :NA

(71)**Name of Applicant :**
1)ALCON RESEARCH LTD.
Address of Applicant :6201 South Freeway Fort Worth Texas 76134 U.S.A.
(72)**Name of Inventor :**
1)DAVIS James W.
2)KETELSON Howard Allen
3)CAMPBELL Elaine E.
4)MEADOWS David L.
5)RANGARAJAN Rekha

(57) Abstract :
The present invention relates to artificial tear compositions and ophthalmic compositions suitable for drug delivery. In one embodiment of the present invention the compositions comprise a galactomannan polymer such as guar or hydroxypropyl guar hyaluronic acid and a cis diol such as sorbitol. In a preferred embodiment the compositions also comprise a borate compound.

No. of Pages : 25 No. of Claims : 12

(12) PATENT APPLICATION PUBLICATION
(21) Application No.2249/MUMNP/2014 A
(19) INDIA
(22) Date of filing of Application :06/11/2014
(43) Publication Date : 24/07/2015

(54) Title of the invention : LIGHT BLOCKING/INSULATING PANEL FOR WINDOW

(51) International classification :E06B3/70,E06B5/00,E06B9/24
(31) Priority Document No :2012-108016
(32) Priority Date :09/05/2012
(33) Name of priority country :Japan
(86) International Application No :PCT/JP2013/063040
Filing Date :09/05/2013
(87) International Publication No :WO 2013/168766
(61) Patent of Addition to Application Number :NA
Filing Date :NA
(62) Divisional to Application Number :NA
Filing Date :NA

(71)**Name of Applicant :**
1)TAKAHASHI Hideo
Address of Applicant :5 1 Iwanaridai 9 chome Kasugai shi Aichi 4870033 Japan
2)YAMADA Teruhiko
(72)**Name of Inventor :**
1)TAKAHASHI Hideo
2)YAMADA Teruhiko

(57) Abstract :
Provided is a light blocking/insulating panel for a window used as an energy saving measure the panel mounted on the inner side of the window glass of a building by being affixed with adhesive tape or the like to reduce the cooling/heating load. A transparent light blocking and insulating light blocking/insulating panel mounted on the inner side of a window the panel comprising a multiple layer structure provided with a film layer on one or both sides of an insulating base material layer having a plurality of through holes formed therein or an insulating base material layer with no film layers wherein the thickness of the insulating base material is 2 7 mm the diameter of the through holes is 2 7 mm the opening ratio is at least 45% and the ratio of hole diameter to hole depth is set to be 2:1 to 1:1. Any of: a double sided adhesive tape with removable backing paper; a double sided adhesive tape with removable backing paper one side having a micro suction disk layer and the other side having an adhesive layer; or a porous double sided adhesive tape made by forming holes in the abovementioned double side adhesive tape is affixed in advance so that the adhesive layer surface faces the multiple layer structure.

No. of Pages : 21 No. of Claims : 7

(12) PATENT APPLICATION PUBLICATION
(19) INDIA
(22) Date of filing of Application :10/11/2014
(21) Application No.2266/MUMNP/2014 A
(43) Publication Date : 24/07/2015

(54) Title of the invention : ANALYSIS FOR QUANTIFYING MICROSCOPIC DIFFUSION ANISOTROPY

(51) International classification	:G01R33/563,A61B5/055,G01N24/00
(31) Priority Document No	:1250453-6
(32) Priority Date	:04/05/2012
(33) Name of priority country	:Sweden
(86) International Application No	:PCT/SE2013/050493
Filing Date	:03/05/2013
(87) International Publication No	:WO 2013/165313
(61) Patent of Addition to Application Number	:NA
Filing Date	:NA
(62) Divisional to Application Number	:NA
Filing Date	:NA

(71)**Name of Applicant :**
1)CR DEVELOPMENT AB
Address of Applicant :Box 124 S 221 00 Lund Sweden
(72)**Name of Inventor :**
1)TOPGAARD Daniel
2)LASIC Samo
3)NILSSON Markus

(57) Abstract :
The present invention describes a method for quantifying microscopic diffusion anisotropy and/or mean diffusivity in a material by analysis of echo attenuation curves acquired with two different gradient modulations schemes wherein one gradient modulation scheme is based on isotropic diffusion weighting and the other gradient modulation scheme is based on non isotropic diffusion weighting and wherein the method comprises analyzing by comparing the signal decays of the two acquired echo attenuation curves.

No. of Pages : 32 No. of Claims : 18

(12) PATENT APPLICATION PUBLICATION
(21) Application No.2267/MUMNP/2014 A
(19) INDIA
(22) Date of filing of Application :10/11/2014
(43) Publication Date : 24/07/2015

(54) Title of the invention : INDUSTRIAL FABRIC INCLUDING SPIRALLY WOUND MATERIAL STRIPS WITH REINFORCEMENT

(51) International classification :D21F1/00,D21F3/02,D21F7/08
(31) Priority Document No :13/469,966
(32) Priority Date :11/05/2012
(33) Name of priority country :U.S.A.
(86) International Application No :PCT/US2013/040364
Filing Date :09/05/2013
(87) International Publication No :WO 2013/170042
(61) Patent of Addition to Application Number :NA
Filing Date :NA
(62) Divisional to Application Number :NA
Filing Date :NA

(71)**Name of Applicant :**
1)ALBANY INTERNATIONAL CORP.
Address of Applicant :216 Airport Drive Rochester NH 03867 U.S.A.
(72)**Name of Inventor :**
1)EAGLES Dana
2)HANSEN Robert
3)KARLSSON Jonas

(57) Abstract :
An industrial fabric such as an endless belt or sleeve for use in the production of nonwovens and a method of making thereof are disclosed. The industrial fabric is produced by spirally winding strips (16) of polymeric material such as an industrial strapping or ribbon material and joining the adjoining sides of the strips (16) of material using ultrasonic welding or laser welding techniques. The fabric may then be perforated using a suitable technique to make it permeable to air and/or water.

No. of Pages : 46 No. of Claims : 36

(12) PATENT APPLICATION PUBLICATION
(19) INDIA
(22) Date of filing of Application :10/11/2014
(21) Application No.2268/MUMNP/2014 A
(43) Publication Date : 24/07/2015

(54) Title of the invention : INDUSTRIAL FABRIC INCLUDING SPIRALLY WOUND MATERIAL STRIPS WITH REINFORCEMENT

(51) International classification :D21F1/00,D21F7/08,D21F3/02
(31) Priority Document No :13/469,994
(32) Priority Date :11/05/2012
(33) Name of priority country :U.S.A.
(86) International Application No :PCT/US2013/040360
Filing Date :09/05/2013
(87) International Publication No :WO 2013/170038
(61) Patent of Addition to Application Number :NA
Filing Date :NA
(62) Divisional to Application Number :NA
Filing Date :NA

(71)**Name of Applicant :**
1)ALBANY INTERNATIONAL CORP.
Address of Applicant :216 Airport Drive Rochester NH 03867 U.S.A.
(72)**Name of Inventor :**
1)EAGLES Dana
2)HANSEN Robert
3)KARLSSON Jonas

(57) Abstract :
An industrial fabric belt or sleeve and a method of making the fabric belt or sleeve are disclosed. The industrial fabric belt or sleeve is produced by spirally winding strips (16) of polymeric material such as an industrial strapping or ribbon material and joining the adjoining sides of the strips (16) of material using ultrasonic welding or laser welding techniques. The fabric belt or sleeve may then be perforated using a suitable technique to make it permeable to air and/or water.

No. of Pages : 43 No. of Claims : 36

(12) PATENT APPLICATION PUBLICATION
(21) Application No.2269/MUMNP/2014 A
(19) INDIA
(22) Date of filing of Application :10/11/2014
(43) Publication Date : 24/07/2015

(54) Title of the invention : COMPOSITION FOR TREATING METABOLIC DISORDERS

(51) International classification :A61K36/18,A61P3/00
(31) Priority Document No :61/636,792
(32) Priority Date :23/04/2012
(33) Name of priority country :U.S.A.
(86) International Application No :PCT/IB2013/053155
Filing Date :22/04/2013
(87) International Publication No :WO 2013/160811
(61) Patent of Addition to Application Number :NA
Filing Date :NA
(62) Divisional to Application Number :NA
Filing Date :NA

(71)**Name of Applicant :**
1)PIRAMAL ENTERPRISES LIMITED
Address of Applicant :Piramal Tower Ganpatrao Kadam Marg Lower Parel Mumbai 400013 Maharashtra India
(72)**Name of Inventor :**
1)SAKLANI Arvind
2)MALPURE Nilesh
3)GAIKWAD Parikshit
4)SAWANT Satish Namdeo
5)MANE Tukaram Kisanrao
6)SHARMA Somesh

(57) Abstract :
The present invention relates to a herbal composition comprising a therapeutically effective amount of an extract of the plant as an active ingredient and optionally a pharmaceutically acceptable carrier. The invention also relates to a process for the preparation of the extract. The invention also relates to a method for the treatment of metabolic disorders using the said composition. The present invention also relates to a composition comprising a therapeutically effective amount of an extract of the plant for use in combination with one or more further therapeutically active agent for the treatment of metabolic disorders.

No. of Pages : 35 No. of Claims : 13

(12) PATENT APPLICATION PUBLICATION
(19) INDIA
(22) Date of filing of Application :10/12/2014
(21) Application No.2515/MUMNP/2014 A
(43) Publication Date : 24/07/2015

(54) Title of the invention : FLOATING STRUCTURE AND METHOD FOR OBTAINING SAME

(51) International classification :A01K61/00,B63B35/613
(31) Priority Document No :P201230794
(32) Priority Date :25/05/2012
(33) Name of priority country :Spain
(86) International Application No :PCT/ES2013/070335
Filing Date :24/05/2013
(87) International Publication No :WO 2013/175046
(61) Patent of Addition to Application Number :NA
Filing Date :NA
(62) Divisional to Application Number :NA
Filing Date :NA

(71)**Name of Applicant :**
1)ESPA'OLA DE PLATAFORMAS MARINAS S.L.
Address of Applicant :Campa±a s/n Valga E 36645 Pontevedra Spain
(72)**Name of Inventor :**
1)QUINTA CORTI'AS Andrs

(57) Abstract :
The invention relates to a floating structure and to a method for obtaining same. The structure provides a first plurality of tubes (1) and a second plurality of tubes (2). The second plurality of tubes (2) is inserted into the first plurality of tubes (1) such as to extend through the upper portion of same and both sets of tubes are welded together. The ends of the tubes of the first plurality of tubes (1) as per the example are closed in order to be used as flotation tanks when the floating structure is fitted out for the use thereof. According to the method the first plurality of tubes (1) is locked in place on the frame (7) with the pairs of holes (4 4) provided in the tubes (1) of the first plurality of tubes (1) being aligned and a corresponding tube (2) of the second plurality of tubes (2) is inserted through each pair of aligned holes by force the ends of each of the connection portions or parts (3) contained in the tubes (1) being welded on the periphery of the holes (4 4).

No. of Pages : 15 No. of Claims : 3

(12) PATENT APPLICATION PUBLICATION
(19) INDIA
(22) Date of filing of Application :12/12/2014
(21) Application No.2532/MUMNP/2014 A
(43) Publication Date : 24/07/2015

(54) Title of the invention : URACYL SPIROOXETANE NUCLEOSIDES

(51) International classification :C07H19/11,A61K31/7072,A61P31/14
(31) Priority Document No :12169425.1
(32) Priority Date :25/05/2012
(33) Name of priority country :EPO
(86) International Application No :PCT/EP2013/060704
Filing Date :24/05/2013
(87) International Publication No :WO 2013/174962
(61) Patent of Addition to Application Number :NA
Filing Date :NA
(62) Divisional to Application Number :NA
Filing Date :NA

(71)**Name of Applicant :**
1)JANSSEN R&D IRELAND
Address of Applicant :Eastgate Village Eastgate Little Island Co Cork Ireland
(72)**Name of Inventor :**
1)JANSSEN R&D IRELAND

(57) Abstract :
The present invention relates to compounds of the formula I: including any possible stereoisomers thereof wherein R has the meaning as defined herein or a pharmaceutically acceptable salt or solvate thereof. The present invention also relates to processes for preparing said compounds pharmaceutical compositions containing them and their use alone or in combination with other HCV inhibitors in HCV therapy.

No. of Pages : 32 No. of Claims : 13

(12) PATENT APPLICATION PUBLICATION
(19) INDIA
(22) Date of filing of Application :12/12/2014
(21) Application No.2533/MUMNP/2014 A
(43) Publication Date : 24/07/2015

(54) Title of the invention : A METHOD FOR THE PREPARATION OF 3 AMINO N CYCLOPROPYL 2 HYDROXYL HEXANAMIDE

(51) International classification :C07C231/02
(31) Priority Document No :201210193923.4
(32) Priority Date :13/06/2012
(33) Name of priority country :China
(86) International Application No :PCT/EP2013/062121
Filing Date :12/06/2013
(87) International Publication No :WO 2013/186248
(61) Patent of Addition to Application Number :NA
Filing Date :NA
(62) Divisional to Application Number :NA
Filing Date :NA

(71)**Name of Applicant :**
1)JANSSEN PHARMACEUTICA NV
Address of Applicant :Turnhoutseweg 30 B 2340 Beerse Belgium
(72)**Name of Inventor :**
1)LIN, Bangping
2)WANG, Zhongmei
3)GUO, Bin

(57) Abstract :
The present invention discloses a method for preparing 3 amino N cyclopropyl 2 hydroxyl hexanamide. The invention relates to the technical field of the preparation of pharmaceutical intermediates. The method uses trans 2 hexenoic acid as the starting material through the steps of epoxidation ring opening by nitrile amidation etc. to obtain the final product 3 amino N cyclopropyl 2 hydroxyl hexanamide. The method uses easily obtainable materials requires mild reactive conditions and adopts stable processes. Therefore it is suitable for large scale industrial production.

No. of Pages : 29 No. of Claims : 29

(12) PATENT APPLICATION PUBLICATION
(19) INDIA
(22) Date of filing of Application :12/12/2014
(21) Application No.2534/MUMNP/2014 A
(43) Publication Date : 24/07/2015

(54) Title of the invention : BINDER

(51) International classification	:B42F13/22,B42F13/16,B42F13/26
(31) Priority Document No	:2012-140008
(32) Priority Date	:21/06/2012
(33) Name of priority country	:Japan
(86) International Application No	:PCT/JP2013/066872
Filing Date	:19/06/2013
(87) International Publication No	:WO 2013/191216
(61) Patent of Addition to Application Number	:NA
Filing Date	:NA
(62) Divisional to Application Number	:NA
Filing Date	:NA

(71)**Name of Applicant :**
1)KANEDA COMPANY LIMITED
Address of Applicant :9 15Chuo 2 chomeOta ku Tokyo 1430024 Japan
(72)**Name of Inventor :**
1)KANEDAToru

(57) Abstract :
The position of the half rings when binder rings were released was unstable and loose leaf replacement was difficult. A loose leaf binder in which base plates (42 44) that secure and support the respective half rings (20 30) are arranged side by side along the longitudinal direction thereof and attached to be mutually rotatable and the base plates (42 44) are energized by a spring at all times in the opening direction wherein: one of the base plates is provided with hook shaped parts (104) which engage with the outer edge of the other base plate when the half rings (20 30) are closed; the other base plate is provided with lock releasing grooves (106) into which the hook shaped parts (104) fall and are released from engagement with said outer edge when the half rings (20 30) deviate in the longitudinal direction; a coil spring (102) for energizing the two base plates (42 44) at all times toward a first position in which the half rings (20 30) stand in a row is provided; and preferably a spring for opening the half rings from each other as a result of the release of said lock is provided.

No. of Pages : 31 No. of Claims : 17

(12) PATENT APPLICATION PUBLICATION
(19) INDIA
(22) Date of filing of Application :12/12/2014
(21) Application No.2535/MUMNP/2014 A
(43) Publication Date : 24/07/2015

(54) Title of the invention : METHODS OF OPERATION FOR REDUCED RESIDUAL HYDROCARBON ACCUMULATION IN OIL SHALE PROCESSING

(51) International classification :E21B43/30,E21B43/16,E21B43/34
(31) Priority Document No :61/659252
(32) Priority Date :13/06/2012
(33) Name of priority country :U.S.A.
(86) International Application No :PCT/US2013/045621
Filing Date :13/06/2013
(87) International Publication No :WO 2013/188646
(61) Patent of Addition to Application Number :NA
Filing Date :NA
(62) Divisional to Application Number :NA
Filing Date :NA

(71)**Name of Applicant :**
1)RED LEAF RESOURCES INC.
Address of Applicant :10808 South River Front Parkway Suite 200 South Jordan UT 84095 U.S.A.
(72)**Name of Inventor :**
1)PATTEN James W.

(57) Abstract :
A method of reducing residual hydrocarbon accumulation during processing can comprise forming a permeable body (608) of a comminuted hydro carbonaceous material within an enclosure (602). A primary liquid collection system (610) is located in a lower portion of the permeable body. The primary liquid collection system (610) has an upper surface for collecting and removing liquids. Comminuted hydro carbonaceous material below the primary liquid collection system (610) forms a non production zone (616). At least a portion of the permeable body (608) is heated to a bulk temperature above a production temperature sufficient to remove hydrocarbons therefrom within a production zone (614) where conditions in the non production zone (616) are maintained below the production temperature.

No. of Pages : 46 No. of Claims : 27

(12) PATENT APPLICATION PUBLICATION
(19) INDIA
(22) Date of filing of Application :15/12/2014
(21) Application No.2540/MUMNP/2014 A
(43) Publication Date : 24/07/2015

(54) Title of the invention : COTTON PLANT EVENT A26 5 AND PRIMER AND METHOD FOR USE IN DETECTION THEREOF

(51) International classification	:C12N15/29,C12N15/32,C12N15/63
(31) Priority Document No	:NA
(32) Priority Date	:NA
(33) Name of priority country	:NA
(86) International Application No	:PCT/CN2012/000673
Filing Date	:16/05/2012
(87) International Publication No	:WO 2013/170398
(61) Patent of Addition to Application Number	:NA
Filing Date	:NA
(62) Divisional to Application Number	:NA
Filing Date	:NA

(71)**Name of Applicant :**
1)BIOCENTURY TRANSGENE (CHINA) CO. LTD.
Address of Applicant :4th Floor Oriental Pearl Technology Building Block 308 Shawei Industrial Zone Futian District Shenzhen Guangdong 518048 China
(72)**Name of Inventor :**
1)CUI Hongzhi
2)HE Yunwei
3)WANG Jundan
4)CHEN Wenhua
5)WANG Jiansheng
6)SONG Huiping

(57) Abstract :
Provided are bollworm resistant cotton transformation event A26 5 and a characteristic sequence thereof and a primer and method for use in detecting the transformation event. Transformation event A26 5 is located on the eighth set of chromosomes of a cotton plant and comprises a combination of an inserted exogenous DNA sequence and a cotton genome DNA sequence. Also provided is a primer for specificity detection of event A26 5 by utilizing the inserted exogenous DNA sequence and a flanking sequence of a junction area on the cotton genome. The method for detecting event A26 5 can be used as a means to provide use of the event for breeding with convenient tracking of the specific gene insertion event. The A26 5 gene insertion event can serve as a molecular marker for use in increasing breeding efficiency.

No. of Pages : 53 No. of Claims : 10

(12) PATENT APPLICATION PUBLICATION
(19) INDIA
(22) Date of filing of Application :15/12/2014
(21) Application No.2541/MUMNP/2014 A
(43) Publication Date : 24/07/2015

(54) Title of the invention : WINDING DEVICE

(51) International classification :B29D30/48,B21F37/00
(31) Priority Document No :NA
(32) Priority Date :NA
(33) Name of priority country :NA
(86) International Application No :PCT/JP2012/066006
Filing Date :22/06/2012
(87) International Publication No :WO 2013/190696
(61) Patent of Addition to Application Number :NA
Filing Date :NA
(62) Divisional to Application Number :NA
Filing Date :NA

(71)**Name of Applicant :**
1)FUJI SEIKO CO. LTD.
Address of Applicant :60 Hirakata 13 chome Fukuju cho Hashima shi Gifu 5016257 Japan
2)FUJI SHOJI CO. LTD.
(72)**Name of Inventor :**
1)NISHIDA Kihachiro

(57) Abstract :
Provided is a winding device equipped with a base plate (23) that is rotated by a rotation shaft (22) and multiple segments (25) that are disposed in a circular region corresponding to the outer circumference of the base plate (23) and are supported on the base plate (23) so as to correspond to the shape of a multiply divided circular region along the circumferential direction of the base plate (23) and to allow movement in the radial direction of the base plate (23). With rotation of the base plate (23) a wire (W) is wound on the outer circumference of the respective segments (25) which rotate as a unit with the base plate (23) to form a bead ring (B). The winding device is equipped with an operation shaft (26) that is rotated by a handle (30) and converting mechanisms (31) that are provided between the operation shaft (26) and each of the segments (25) and are for transmitting the rotation of the operation shaft (26) by conversion to movement of each segment (25) in the radial direction of the base plate (23).

No. of Pages : 33 No. of Claims : 8

(12) PATENT APPLICATION PUBLICATION
(19) INDIA
(22) Date of filing of Application :15/12/2014
(21) Application No.2542/MUMNP/2014 A
(43) Publication Date : 24/07/2015

(54) Title of the invention : LIQUID SPRAYING DEVICE

(51) International classification :B05B7/06,C02F1/46
(31) Priority Document No :2012-249840
(32) Priority Date :14/11/2012
(33) Name of priority country :Japan
(86) International Application No :PCT/JP2013/073896
Filing Date :05/09/2013
(87) International Publication No :WO 2014/077020
(61) Patent of Addition to Application Number :NA
Filing Date :NA
(62) Divisional to Application Number :NA
Filing Date :NA

(71)**Name of Applicant :**
1)KANNO Minoru
Address of Applicant :10 23 Hachiman 6 chome Aoba ku Sendai shi Miyagi 9800871 Japan
(72)**Name of Inventor :**
1)KANNO Minoru

(57) Abstract :
A base (26) has a discharge outlet (30) for discharging acidic water. The base (26) has a first supply channel (28) communicating with the discharge outlet (30) so as to enable the supply of acidic water and a second supply channel (29) communicating with a plurality of spray orifices (34) so as to enable the supply of alkaline water. The second supply channel (29) is open so that the tip thereof continues entirely around the lateral face of the base (26). The rotation section (27) is rotatably provided along the lateral surface of the base (26). The rotation section (27) has a plurality of spray orifices (34) arranged so as to surround the circumference of the discharge outlet (30). The rotation section (27) has a plurality of communication channels (33) communicating with the spray orifices (34) and the second supply channel (29). The spray orifices (34) spray alkaline water while rotating around the discharge outlet (30) so that a curtain of the alkaline water surrounds the acidic water discharged from the discharge outlet (30).

No. of Pages : 23 No. of Claims : 6

(12) PATENT APPLICATION PUBLICATION
(19) INDIA
(22) Date of filing of Application :16/12/2014
(21) Application No.2545/MUMNP/2014 A
(43) Publication Date : 24/07/2015

(54) Title of the invention : DISTRIBUTION BOX FOR SINGLE SEED SEED DRILL WITH OPEN GROOVES AND SEED DRILL USING SUCH A BOX

(51) International classification :A01C7/04
(31) Priority Document No :1255026
(32) Priority Date :31/05/2012
(33) Name of priority country :France
(86) International Application No :PCT/FR2013/051210
Filing Date :30/05/2013
(87) International Publication No :WO 2013/178948
(61) Patent of Addition to Application Number :NA
Filing Date :NA
(62) Divisional to Application Number :NA
Filing Date :NA

(71)**Name of Applicant :**
1)KUHN S.A.
Address of Applicant :4 Impasse des Fabriques F 67700 Saverne France
(72)**Name of Inventor :**
1)AUDIGIE Jean Charles
2)EBERHART Julien

(57) Abstract :
The present invention relates to a distribution box (1) for a single seed seed drill with a disc (4) provided with radial grooves (5) which are evenly spaced and open at the periphery of said disc (4) said disc (4) being mounted to rotate on a horizontal axis (4a) and separating a seed reservoir (6) from a suction device (7) so that the seeds are picked up from the reservoir (6) by said disc (4) using the stream of air at a depression and are held over at least part of their angular travel until they are expelled from a discharge opening (8). The box is notable in that each groove (5) has a suction hole (10) of a size smaller than that of the seeds that are to be distributed said suction hole (10) opens onto a canal (11) of a width smaller than the diameter of the suction hole (10) said canal (11) is open as far as the periphery of the disc (4). The present invention also relates to a single seed seed drill with at least one distribution box according to the invention.

No. of Pages : 14 No. of Claims : 13

(12) PATENT APPLICATION PUBLICATION
(21) Application No.2546/MUMNP/2014 A
(19) INDIA
(22) Date of filing of Application :16/12/2014
(43) Publication Date : 24/07/2015

(54) Title of the invention : DEVICE AND METHOD FOR SEPARATING A LONGITUDINALLY EXTENDED CYLINDRICAL WORKPIECE

(51) International classification	:B23K26/38,B23K26/08,B23K37/053
(31) Priority Document No	:10 2012 211 206.5
(32) Priority Date	:28/06/2012
(33) Name of priority country	:Germany
(86) International Application No	:PCT/EP2013/060143
Filing Date	:16/05/2013
(87) International Publication No	:WO 2014/000965
(61) Patent of Addition to Application Number	:NA
Filing Date	:NA
(62) Divisional to Application Number	:NA
Filing Date	:NA

(71)**Name of Applicant :**
1)ROFIN BAASEL LASERTECH GMBH & CO. KG
Address of Applicant :Petersbrunner Str. 1b 82319 Starnberg Germany
(72)**Name of Inventor :**
1)BACHMEIR Johannes
2)PANKATZ Dieter
3)GLASER Andreas

(57) Abstract :
In a device for separating a longitudinally extended cylindrical workpiece (36) which has a diameter in the sub millimetre range into individual segments (74) the workpiece is guided in a clamping device (4) which comprises at least one first and one second clamping jaw (6 7) and a feed opening (10) for the workpiece (36) the feed opening being fitted between the clamping jaws (7) on the side facing the other clamping jaw (6) and a longitudinal groove (32) which defines a direction of advancement of the workpiece (36) in order to receive and guide the workpiece (36) between the clamping jaws (6 7). The clamping device (4) has a passage (68) for a laser beam (L) and a cutting gas (SG) which passage defines a working zone (46) disrupts the longitudinal groove (32) and runs parallel thereto a cutter head (2) being arranged in the working zone (46) and having an outlet opening (48) for the laser beam (L) and the cutting gas (SG) which outlet opening is aligned with the passage (68). This measure allows the workpiece (36) to be separated into individual segments (74) with precision.

No. of Pages : 15 No. of Claims : 10

(12) PATENT APPLICATION PUBLICATION
(19) INDIA
(22) Date of filing of Application :16/12/2014
(21) Application No.2547/MUMNP/2014 A
(43) Publication Date : 24/07/2015

(54) Title of the invention : TWO STAGE GASIFICATION WITH DUAL QUENCH

(51) International classification :C10J3/46,C10K1/28
(31) Priority Document No :61/664415
(32) Priority Date :26/06/2012
(33) Name of priority country :U.S.A.
(86) International Application No :PCT/US2013/047851
Filing Date :26/06/2013
(87) International Publication No :WO 2014/004646
(61) Patent of Addition to Application Number :NA
Filing Date :NA
(62) Divisional to Application Number :NA
Filing Date :NA

(71)**Name of Applicant :**
1)LUMMUS TECHNOLOGY INC.
Address of Applicant :1515 Broad Street Bloomfield NJ 07003 3096 U.S.A..
(72)**Name of Inventor :**
1)KEELER Clifton G.
2)WILLIAMS Chancelor L.
3)BUSTAMANTE Ivan O.

(57) Abstract :
Improved two stage entrained flow gasification systems and processes that reduce the cost and complexity of the design and increase the reliability while maintaining the efficiency by implementing a first chemical quench followed by a second water quench of the produced syngas. The quenched syngas is maintained above the condensation temperature of at least one condensable component of the syngas allowing residual particulates to be removed by dry particulate filtration.

No. of Pages : 27 No. of Claims : 18

(12) PATENT APPLICATION PUBLICATION
(19) INDIA
(22) Date of filing of Application :16/12/2014
(21) Application No.2548/MUMNP/2014 A
(43) Publication Date : 24/07/2015

(54) Title of the invention : FLOW FIELD PLATE FOR A FUEL CELL

(51) International classification :H01M8/24,H01M8/02,H01M8/04
(31) Priority Document No :NA
(32) Priority Date :NA
(33) Name of priority country :NA
(86) International Application No :PCT/IB2012/053229
Filing Date :26/06/2012
(87) International Publication No :WO 2014/001842
(61) Patent of Addition to Application Number :NA
Filing Date :NA
(62) Divisional to Application Number :NA
Filing Date :NA

(71)**Name of Applicant :**
1)POWERCELL SWEDEN AB
Address of Applicant :Ruskvdersgatan 12 S 418 34 Gteborg Sweden
(72)**Name of Inventor :**
1)BOD‰N Andreas
2)TINGEL–F Thomas
3)BAUMANN OFSTAD Axel
4)IHONEN Jari
5)TENSTAM Anders

(57) Abstract :
The present invention discloses a flow field plate (100; 200) for a bipolar plate or bipolar plate assembly of a fuel cell or a fuel cell stack having an electrode facing front side a backside and at least a cooling fluid manifold (102; 202) for supplying cooling fluid to the flow field plate (100; 200) wherein the backside comprises a cooling fluid flow field (1 10; 210) for substantially uniformly distributing the cooling fluid over the flow field plate (100; 200) the flow field plate (100; 200) further comprises a cooling fluid sub manifold (1 12; 212) which is adapted to provide cooling fluid from the cooling fluid manifold (102; 202) to a cooling fluid flow field (210; 1 10) wherein the cooling fluid sub manifold (1 12; 212) is fluidly disconnected from the cooling fluid flow field (1 10; 210) a bipolar plate or bipolar plate assembly comprising a flow field plate as well as a fuel cell or fuel cell stack comprising such a flow field plate and/or bipolar plate or such a bipolar plate assembly.

No. of Pages : 28 No. of Claims : 20

(12) PATENT APPLICATION PUBLICATION
(19) INDIA
(22) Date of filing of Application :17/12/2014
(21) Application No.2555/MUMNP/2014 A
(43) Publication Date : 24/07/2015

(54) Title of the invention : A MICROSIEVE DIAGNOSTIC DEVICE IN THE ISOLATION AND ANALYSIS OF SINGLE CELLS

(51) International classification :B01L3/00,B01D61/14,B01D67/00
(31) Priority Document No :1039638
(32) Priority Date :01/06/2012
(33) Name of priority country :Netherlands
(86) International Application No :PCT/NL2013/050389
Filing Date :29/05/2013
(87) International Publication No :WO 2013/180567
(61) Patent of Addition to Application Number :NA
Filing Date :NA
(62) Divisional to Application Number :NA
Filing Date :NA

(71)**Name of Applicant :**
1)VYCAP B.V.
Address of Applicant :A. Rademakerstraat 41 NL 7425 PG Deventer Netherlands
(72)**Name of Inventor :**
1)TIBBE Arjan Gerhardus Johannes
2)VAN RIJN Cornelis Johannes Maria
3)TERSTAPPEN Leonardus Wendelinus Mathias Marie

(57) Abstract :
A micro well plate is described for capturing and distributing single cells in individual wells is described wherein at least one individual well is provided with a bottom plate having at least one pore to pass sample liquid such that if one object or cell of interest is collected on the bottom plate of the well the sample flow rate through that particular well is significantly reduced minimizing the possibility that multiple cells or objects of interest entering the same well. The presented invention is particularly suited for obtaining single cells and/or microorganisms suspended in fluid samples for subsequent detailed interrogation.

No. of Pages : 54 No. of Claims : 49

(12) PATENT APPLICATION PUBLICATION
(19) INDIA
(22) Date of filing of Application :17/12/2014
(21) Application No.2556/MUMNP/2014 A
(43) Publication Date : 24/07/2015

(54) Title of the invention : BANKNOTE HANDLING DEVICE

(51) International classification :G07D9/00,B65H31/24,B65H83/02
(31) Priority Document No :2012-136750
(32) Priority Date :18/06/2012
(33) Name of priority country :Japan
(86) International Application No :PCT/JP2013/000927
Filing Date :20/02/2013
(87) International Publication No :WO 2013/190738
(61) Patent of Addition to Application Number :NA
Filing Date :NA
(62) Divisional to Application Number :NA
Filing Date :NA

(71)**Name of Applicant :**
1)HITACHI OMRON TERMINAL SOLUTIONS CORP.
Address of Applicant :6 3 Osaki 1 chome Shinagawa ku Tokyo 1418576 Japan
(72)**Name of Inventor :**
1)NISHINO Akira
2)MABUCHI Yukihiro
3)KANAGAWA Takeshi
4)KATOU Riichi

(57) Abstract :
Provided is a technique for improving banknote manageability in a banknote handling device. This banknote handling device (100) is provided with multiple banknote storage compartments (71 73) where banknotes are stored and a banknote loading compartment (70) where banknotes are stored that are to be loaded in each of the banknote storage compartments (71 73). This banknote handling device (100) is provided with a banknote determination unit (30) which obtains the serial numbers of banknotes in conveyance between the banknote storage compartments (71 73) and the banknote loading compartment (70) and a conveyance path (80) which conveys banknotes from the banknote loading compartment (70) to the banknote storage compartments (71 73) via the banknote determination unit (30). A main control unit (161) of the banknote handling device (100) controls the conveyance path (80) and while loading the banknotes from the banknote loading compartment (70) into each of the banknote storage compartments (71 73) performs banknote loading processing in which the serial numbers of the banknotes are obtained from the banknote determination unit (30).

No. of Pages : 43 No. of Claims : 7

(12) PATENT APPLICATION PUBLICATION
(19) INDIA
(22) Date of filing of Application :17/12/2014
(21) Application No.2557/MUMNP/2014 A
(43) Publication Date : 24/07/2015

(54) Title of the invention : SYSTEMS METHODS AND APPARATUS FOR SMALL DEVICE WIRELESS CHARGING MODES

(51) International classification :H02J5/00,H02J7/02
(31) Priority Document No :61/671581
(32) Priority Date :13/07/2012
(33) Name of priority country :U.S.A.
(86) International Application No :PCT/US2013/049763
Filing Date :09/07/2013
(87) International Publication No :WO 2014/011659
(61) Patent of Addition to Application Number :NA
Filing Date :NA
(62) Divisional to Application Number :NA
Filing Date :NA

(71)**Name of Applicant :**
1)QUALCOMM INCORPORATED
Address of Applicant :ATTN: International IP Administration 5775 Morehouse Drive San Diego California 92121 1714 U.S.A.
(72)**Name of Inventor :**
1)VON NOVAK William H.

(57) Abstract :
Systems methods and apparatus are disclosed for wirelessly charging devices that may not be able to communicate with a wireless charger. In one aspect a wireless charging device is provided including a transmitter configured to wirelessly transmit power via a wireless field at a power level sufficient to charge one or more electronic devices according to one or more charging modes including at least a first charging mode in which the transmitter is configured to vary the power level of the transmitter based on feedback received from one of the one or more electronic devices and a second charging mode in which the power level is constant. The wireless charging device includes a sensor configured to obtain input for switching between the charging modes. The wireless charging device further includes a controller configured to switch between the first charging mode and the second charging mode in response to the input.

No. of Pages : 41 No. of Claims : 34

(12) PATENT APPLICATION PUBLICATION
(21) Application No.2558/MUMNP/2014 A
(19) INDIA
(22) Date of filing of Application :17/12/2014
(43) Publication Date : 24/07/2015

(54) Title of the invention : BANKNOTE HANDLING DEVICE

(51) International classification :G07D9/00
(31) Priority Document No :2012-136749
(32) Priority Date :18/06/2012
(33) Name of priority country :Japan
(86) International Application No :PCT/JP2013/000931
Filing Date :20/02/2013
(87) International Publication No :WO 2013/190740
(61) Patent of Addition to Application Number :NA
Filing Date :NA
(62) Divisional to Application Number :NA
Filing Date :NA

(71)**Name of Applicant :**
1)HITACHI OMRON TERMINAL SOLUTIONS CORP.
Address of Applicant :6 3 Osaki 1 chome Shinagawa ku Tokyo 1418576 Japan
(72)**Name of Inventor :**
1)NISHINO Akira
2)MABUCHI Yukihiro
3)KANAGAWA Takeshi
4)KATOU Riichi

(57) Abstract :
A banknote handling device that improves banknote delivery efficiency by reading serial numbers for banknotes by using a banknote discrimination unit. The banknote handling device comprises: a banknote deposit/withdrawal unit for receiving and delivering banknotes from and to a user; the banknote discrimination unit that discriminates banknotes and is capable of reading banknote serial numbers; a banknote storage unit that stores banknotes; a delivery path that delivers banknotes deposited into the banknote deposit/withdrawal unit to the banknote storage unit via the banknote discrimination unit; and a control unit that controls the banknote deposit/withdrawal unit the banknote discrimination unit the banknote storage unit and the delivery path. The banknote handling device is characterized by the control unit controlling the banknote deposit/withdrawal unit the banknote discrimination unit the banknote storage unit and the delivery path such that if a deposit transaction with a user fails after banknotes have been deposited banknotes having the same serial numbers as the serial numbers read by the banknote discrimination unit are fetched from the banknote storage unit and delivered to the banknote deposit/withdrawal unit by the delivery path.

No. of Pages : 34 No. of Claims : 6

(12) PATENT APPLICATION PUBLICATION
(19) INDIA
(22) Date of filing of Application :03/11/2014
(21) Application No.2216/MUMNP/2014 A
(43) Publication Date : 24/07/2015

(54) Title of the invention : TERMINAL DEVICE AND TRANSMISSION METHOD

(51) International classification :H04W72/04,H04L1/16,H04W28/06
(31) Priority Document No :2012-117626
(32) Priority Date :23/05/2012
(33) Name of priority country :Japan
(86) International Application No :PCT/JP2013/001772
Filing Date :15/03/2013
(87) International Publication No :WO 2013/175691
(61) Patent of Addition to Application Number :NA
Filing Date :NA
(62) Divisional to Application Number :NA
Filing Date :NA

(71)**Name of Applicant :**
1)PANASONIC INTELLECTUAL PROPERTY CORPORATION OF AMERICA
Address of Applicant :20000 Mariner Avenue Suite 200 Torrance CA 90503 U.S.A.
(72)**Name of Inventor :**
1)OIZUMI Toru

(57) Abstract :
A terminal with which it is possible to reduce the possibility that the detection of uplink control information is performed with multiple uplink unit bands in a base station thereby preventing deterioration in the precision with which uplink control information can be detected. A control unit (208) transmits a response signal on an uplink control channel on the basis of a rule. In the rule error detection result pattern candidates are associated with multiple resources of the uplink control channel used in the transmission of the response signal and with phase points within each resource and at least a specific pattern candidate wherein the pattern for a specific error detection result with respect to downlink data of a first unit band is identical to the error detection result pattern when communication with the base station (100) occurs using only the first unit band and the error detection results other than the specific error detection result are all NACK or DTX is associated with the first resource of the multiple resources. In addition at least the first resource of the multiple resources is arranged within the first unit band.

No. of Pages : 83 No. of Claims : 10

(12) PATENT APPLICATION PUBLICATION
(19) INDIA
(22) Date of filing of Application :17/12/2014
(21) Application No.2563/MUMNP/2014 A
(43) Publication Date : 24/07/2015

(54) Title of the invention : COOLING SYSTEM FOR FUEL CELLS

(51) International classification :H01M8/04,H01M8/24,H01M8/10
(31) Priority Document No :1210880.9
(32) Priority Date :20/06/2012
(33) Name of priority country :U.K.
(86) International Application No :PCT/GB2013/051596
Filing Date :19/06/2013
(87) International Publication No :WO 2013/190294
(61) Patent of Addition to Application Number :NA
Filing Date :NA
(62) Divisional to Application Number :NA
Filing Date :NA

(71)**Name of Applicant :**
1)INTELLIGENT ENERGY LIMITED
Address of Applicant :Charnwood Building Holywell Park Ashby Road Loughborough LE11 3GB U.K.
(72)**Name of Inventor :**
1)ADCOCK Paul Leonard
2)HOOD Peter David
3)NEWBOLD Anthony
4)REISCH Tobias

(57) Abstract :
A fuel cell stack assembly comprises a stack of fuel cells each fuel cell having a cooling air conduit with an input / output ventilation aperture disposed on a ventilation face of the stack. The ventilation apertures form an array over said ventilation face of the stack. A first fan is configured to direct air flow through a first portion of the ventilation face and a second fan is configured to direct air flow through a second portion of the ventilation face. A reconfigurable plenum is in fluid communication with the first fan and the second fan and has a first configuration in which air is directed by the first and second fans through the first and second portions of the ventilation face in the same direction and a second configuration in which air is directed by at least one of the fans respectively through the first and second portions of the ventilation face in opposing directions. When operating in the second configuration the directions of air flow through the first and second portions of the ventilation face are periodically reversed.

No. of Pages : 25 No. of Claims : 18

(12) PATENT APPLICATION PUBLICATION
(19) INDIA
(22) Date of filing of Application :18/12/2014
(21) Application No.2564/MUMNP/2014 A
(43) Publication Date : 24/07/2015

(54) Title of the invention : METHOD FOR DETECTING CANCER AND ANTIBODY CAPABLE OF RECOGNIZING PANCREAS SPECIFIC RIBONUCLEASE 1

(51) International classification	:C12N15/09,A61K39/395,C07K16/40
(31) Priority Document No	:2012-131970
(32) Priority Date	:11/06/2012
(33) Name of priority country	:Japan
(86) International Application No	:PCT/JP2013/065975
Filing Date	:10/06/2013
(87) International Publication No	:WO 2013/187371
(61) Patent of Addition to Application Number	:NA
Filing Date	:NA
(62) Divisional to Application Number	:NA
Filing Date	:NA

(71)**Name of Applicant :**
1)TOSOH CORPORATION
Address of Applicant :4560 Kaisei cho Shunan shi Yamaguchi 7468501 Japan
(72)**Name of Inventor :**
1)NAKATA Daisuke

(57) Abstract :
Pancreatic cancer can be detected by producing a monoclonal antibody which can bind to pancreas specific RNase 1 when no sugar chain is bound to a site located in the pancreas specific RNase 1 and capable of being modified with an N type sugar chain and of which the binding to the pancreas specific RNase 1 is inhibited when an N type sugar chain is bound to the site also producing a monoclonal antibody which can bind to the pancreas specific RNase 1 simultaneously with the binding of the aforementioned antibody to the pancreas specific RNase 1 and determining the ratio of A to B using the antibodies wherein A represents the amount of the site located in the pancreas specific RNase 1 and capable of being modified with an N type sugar chain wherein an N type sugar chain is bound or unbound to the site; and B represents the amount of the site located in the pancreas specific RNase 1 and capable of being modified with an N type sugar chain.

No. of Pages : 56 No. of Claims : 24

(12) PATENT APPLICATION PUBLICATION
(19) INDIA
(22) Date of filing of Application :05/11/2014
(21) Application No.2237/MUMNP/2014 A
(43) Publication Date : 24/07/2015

(54) Title of the invention : SEPARATION FILM FOR ELECTROCHEMICAL DEVICE AND MANUFACTURING METHOD THEREFOR

(51) International classification :H01M2/16
(31) Priority Document No :10-2012-0131036
(32) Priority Date :19/11/2012
(33) Name of priority country :Republic of Korea
(86) International Application No :PCT/KR2013/010518
Filing Date :19/11/2013
(87) International Publication No :WO 2014/077660
(61) Patent of Addition to Application Number :NA
Filing Date :NA
(62) Divisional to Application Number :NA
Filing Date :NA

(71)**Name of Applicant :**
1)LG CHEM LTD.
Address of Applicant :128 Yeoui daero Yeongdeungpo gu Seoul 150 721 Republic of Korea
(72)**Name of Inventor :**
1)KIM Jin Woo
2)LEE Joo Sung
3)KIM Jong Hun

(57) Abstract :
The present invention relates to a separation film for an electrochemical device having excellent mechanical strength by substantially comprising inorganic substance particles an electrochemical device including the same and a method for using a high internal phase emulsion (HIPE) when manufacturing the separation film. The separation film for an electrochemical device according to the present invention has high resistance against temperature increases or external shocks and enables a lithium ion and the like to move smoothly by having fully formed pores. In addition the electrochemical device employing the separation film has remarkably improved stability and performance.

No. of Pages : 14 No. of Claims : 15

(12) PATENT APPLICATION PUBLICATION
(19) INDIA
(22) Date of filing of Application :05/11/2014
(21) Application No.2238/MUMNP/2014 A
(43) Publication Date : 24/07/2015

(54) Title of the invention : SLURRY WITH IMPROVED DISPERSIBILITY AND USE THEREFOR

(51) International classification :H01M2/16
(31) Priority Document No :10-2012-0138434
(32) Priority Date :30/11/2012
(33) Name of priority country :Republic of Korea
(86) International Application No :PCT/KR2013/011056
Filing Date :02/12/2013
(87) International Publication No :WO 2014/084692
(61) Patent of Addition to Application Number :NA
Filing Date :NA
(62) Divisional to Application Number :NA
Filing Date :NA

(71)**Name of Applicant :**
1)LG CHEM LTD.
Address of Applicant :128 Yeoui daero Yeongdeungpo gu Seoul 150 721
(72)**Name of Inventor :**
1)LEE Joo Sung
2)YOON Su Jin
3)HAN Da Kyung
4)RYU Bo Kyung
5)KIM Jong Hun

(57) Abstract :
The present invention relates to slurry viscosity adjustment by controlling a particle diameter of an inorganic material which is one of the components of a slurry used for preparing an electrochemical device to be a predetermined range thereby remarkably decreasing a sedimentation velocity of the inorganic particles and remarkably improving a dispersibility thereof. As a result thereof inorganic particle content relatively increases and inorganic particles can be uniformly distributed in a coating layer on a substrate thereby preventing the deterioration of battery performance.

No. of Pages : 20 No. of Claims : 13

(12) PATENT APPLICATION PUBLICATION
(21) Application No.2239/MUMNP/2014 A
(19) INDIA
(22) Date of filing of Application :05/11/2014
(43) Publication Date : 24/07/2015

(54) Title of the invention : METHOD FOR PREPARING POROUS SEPARATION MEMBRANE COMPRISING ELASTIC MATERIAL POROUS SEPARATION MEMBRANE PREPARED BY SAID METHOD AND SECONDARY BATTERY COMPRISING SAID SEPARATION MEMBRANE

(51) International classification :H01M2/16
(31) Priority Document No :10-2012-0106545
(32) Priority Date :25/09/2012
(33) Name of priority country :Republic of Korea
(86) International Application No :PCT/KR2013/008601
Filing Date :25/09/2013
(87) International Publication No :WO 2014/051339
(61) Patent of Addition to Application Number :NA
Filing Date :NA
(62) Divisional to Application Number :NA
Filing Date :NA

(71)**Name of Applicant :**
1)LG CHEM LTD.
Address of Applicant :128 Yeoui daero Yeongdeungpo gu Seoul 150 721 Republic of Korea
(72)**Name of Inventor :**
1)LEE Joo Sung
2)SHIN Byoung Jin
3)SUNG Dong Wook
4)KIM Jong Hun

(57) Abstract :
The present invention relates to a method for preparing a porous separation membrane and particularly to a method for preparing a porous separation membrane comprising an elastic material to a separation membrane prepared by the method and to a secondary battery comprising the separation membrane. According to one aspect of the present invention a porous separation membrane is provided in which an elastic material is homogeneously distributed in a polymer at a weight ratio of 40:60 to 5:95 and which has an elongation at a breakage value of 250% or more at room temperature in the direction of low elongation strength. According to another aspect of the present invention a method for preparing a porous separation membrane comprises the steps of: forming an extruded sheet by extruding a mixture of a polymer and an elastic material at a weight ratio of 95:5 to 60:40 through an extruder; forming a membrane by annealing and drawing the extruded sheet; and forming the porous separation membrane by heat setting the drawn membrane. According to the present invention a porous separation membrane having improved stability by decreasing the heat shrink rate and significantly increasing elongation at breakage can be provided.

No. of Pages : 16 No. of Claims : 18

(12) PATENT APPLICATION PUBLICATION
(19) INDIA
(22) Date of filing of Application :18/12/2014
(21) Application No.2570/MUMNP/2014 A
(43) Publication Date : 24/07/2015

(54) Title of the invention : SECURITY SYSTEM AND METHOD OF DETECTING CONTRABAND ITEMS

(51) International classification :G01V3/08
(31) Priority Document No :13/475,866
(32) Priority Date :18/05/2012
(33) Name of priority country :U.S.A.
(86) International Application No :PCT/GB2013/051268
Filing Date :16/05/2013
(87) International Publication No :WO 2013/171498
(61) Patent of Addition to Application Number :NA
Filing Date :NA
(62) Divisional to Application Number :NA
Filing Date :NA

(71)**Name of Applicant :**
1)METRASENS LIMITED
Address of Applicant :Malvern Hills Science Park Geraldine Road Malvern Worcestershire WR14 3SZ U.K.
(72)**Name of Inventor :**
1)KEENE Mark N
2)BEST Andrew M
3)BECKER Daniel J

(57) Abstract :
A method of detecting contraband about a person (100) is disclosed and a security screening installation system for use in detecting contraband. The system comprises: a detector apparatus (1) which includes at least one magnetic sensor (7) arranged to produce a signal indicative of an ambient magnetic field or gradient over a zone of sensitivity around the sensor the zone being large enough to contain the whole body of the person and a signal processing circuit which receives as an input the signal from the magnetic sensor and which in response to a change in the signal produces an alert signal; and a wall (200) or other object behind which the detector apparatus is hidden the detector apparatus being positioned so that at least part of the zone of sensitivity extends in front of the wall or other object and is large enough for a person to fit wholly within the zone. The method may alternatively comprise setting up a particle detector apparatus in a chosen location and moving people past the detector.

No. of Pages : 23 No. of Claims : 23

(12) PATENT APPLICATION PUBLICATION
(19) INDIA
(22) Date of filing of Application :05/11/2014
(21) Application No.2229/MUMNP/2014 A
(43) Publication Date : 24/07/2015

(54) Title of the invention : METHOD AND APPARATUS FOR GENERATING ELECTRON BEAMS

(51) International classification :H01J37/077,B29C67/00
(31) Priority Document No :61/644,513
(32) Priority Date :09/05/2012
(33) Name of priority country :U.S.A.
(86) International Application No :PCT/EP2013/058652
Filing Date :25/04/2013
(87) International Publication No :WO 2013/167391
(61) Patent of Addition to Application Number :NA
Filing Date :NA
(62) Divisional to Application Number :NA
Filing Date :NA

(71)**Name of Applicant :**
1)ARCAM AB
Address of Applicant :Krokslttts Fabriker 27A S 43137 Mlndal Sweden
(72)**Name of Inventor :**
1)SVENSSON Mattias
2)LJUNGBLAD Ulric

(57) Abstract :
The present invention relates to a plasma electron source apparatus (150). The apparatus comprises a cathode discharge chamber (100) in which a plasma is generated an exit hole (120) provided in the cathode discharge chamber from which electrons from the plasma (107) are extracted by an accelerating field provided between the cathode discharge chamber (100) and an anode (104) at least one plasma confinement device (e.g. an electromagnetic coil 103) and a switching mechanism (190) for switching the at least one plasma confinement device between a first value allowing for electron extraction from the plasma and a second value prohibiting electron extraction from the plasma. Associated methods are also provided in particular use of the apparatus (150) for forming a three dimensional article through successive fusion of parts of at least one layer of a powder bed provided on a work table.

No. of Pages : 31 No. of Claims : 30

(12) PATENT APPLICATION PUBLICATION
(19) INDIA
(22) Date of filing of Application :18/12/2014
(21) Application No.2567/MUMNP/2014 A
(43) Publication Date : 24/07/2015

(54) Title of the invention : SYSTEMS METHODS APPARATUS AND COMPUTER READABLE MEDIA FOR BACKWARD COMPATIBLE AUDIO CODING

(51) International classification :H04S3/00,H04L29/06,H04H20/89
(31) Priority Document No :61/671789
(32) Priority Date :15/07/2012
(33) Name of priority country :U.S.A.
(86) International Application No :PCT/US2013/046369
Filing Date :18/06/2013
(87) International Publication No :WO 2014/014600
(61) Patent of Addition to Application Number :NA
Filing Date :NA
(62) Divisional to Application Number :NA
Filing Date :NA

(71)**Name of Applicant :**
1)QUALCOMM INCORPORATED
Address of Applicant :ATTN: International IP Administration 5775 Morehouse Drive San Diego California 92121 1714 U.S.A.
(72)**Name of Inventor :**
1)SEN Dipanjan
2)XIANG Pei

(57) Abstract :
Systems methods and apparatus for backward compatible coding of a set of basis function coefficients that describe a sound field are presented.

No. of Pages : 51 No. of Claims : 38

(12) PATENT APPLICATION PUBLICATION
(19) INDIA
(22) Date of filing of Application :18/12/2014
(21) Application No.2568/MUMNP/2014 A
(43) Publication Date : 24/07/2015

(54) Title of the invention : METHOD AND APPARATUS FOR DISPLAYING STEREOSCOPIC INFORMATION RELATED TO ULTRASOUND SECTIONAL PLANE OF TARGET OBJECT

(51) International classification :G06T15/00,H04N13/00
(31) Priority Document No :10-2012-0098962
(32) Priority Date :06/09/2012
(33) Name of priority country :Republic of Korea
(86) International Application No :PCT/KR2013/007723
Filing Date :28/08/2013
(87) International Publication No :WO 2014/038812
(61) Patent of Addition to Application Number :NA
Filing Date :NA
(62) Divisional to Application Number :NA
Filing Date :NA

(71)**Name of Applicant :**
1)SAMSUNG ELECTRONICS CO. LTD.
Address of Applicant :129 Samsung ro Yeongtong gu Suwon si Gyeonggi do 443 742 Republic of Korea
2)SAMSUNG MEDISON CO. LTD.
(72)**Name of Inventor :**
1)CHANG Eun jung
2)LEE Jin yong

(57) Abstract :
A method of displaying stereoscopic information related to an ultrasound sectional plane of a target object includes: setting a line of interest on the target object; obtaining brightness information of the ultrasound sectional plane of the target object along the set line of interest; converting the obtained brightness information into height information; and displaying the stereoscopic information related to the ultrasound sectional plane of the target object based on the height information.

No. of Pages : 29 No. of Claims : 15

(12) PATENT APPLICATION PUBLICATION
(21) Application No.2569/MUMNP/2014 A
(19) INDIA
(22) Date of filing of Application :18/12/2014
(43) Publication Date : 24/07/2015

(54) Title of the invention : AVOIDING CSG BASED ACCESS CONTROL WHEN CSG IDENTIFIER IS USED FOR PURPOSES OTHER THAN ACCESS CONTROL

(51) International classification :H04W48/02,H04W12/08
(31) Priority Document No :13/550457
(32) Priority Date :16/07/2012
(33) Name of priority country :U.S.A.
(86) International Application No :PCT/US2013/049384
Filing Date :03/07/2013
(87) International Publication No :WO 2014/014679
(61) Patent of Addition to Application Number :NA
Filing Date :NA
(62) Divisional to Application Number :NA
Filing Date :NA

(71)**Name of Applicant :**
1)QUALCOMM INCORPORATED
Address of Applicant :Attn: International IP Administration 5775 Morehouse Drive San Diego California 92121 U.S.A..
(72)**Name of Inventor :**
1)SINGH Damanjit
2)CHEN Jen Mei
3)YAVUZ Mehmet

(57) Abstract :
The application relates to femtocells where low power base stations advertise restricted access such to allow closed access only to mobile devices that are members of a corresponding group (e.g. closed subscriber group (CSG)) or to allow hybrid access such that member devices receive improved access over non member devices. The low power base stations in this regard can broadcast a CSG identity for determining association to the low power base station. However the CSG identifier might be advertised even though the base station does not operate in the associated closed or hybrid access mode. This might be because the CSG identifier is uses for purposes other than access control e.g. to identify as a cluster of femto nodes that self configure by adjusting transmit power to provide continuous coverage; self heal in case of femto node failure within the cluster (e.g. by increasing transmit power of the other femto nodes in the cluster); select cell selection/reselection thresholds among the cluster to allow a desired load or network propagation; and/or the like. Hence CSG membership verification is not needed and the application proposes different alternatives of how to avoid such a verification. According to one alternative the femto node is pre configured. According to another alternative a non CSG UE indicates that it is capable of performing CSG functions even though it may not be so capable. According to a third alternative even though the HNB 304 determines that the UE 302 is not CSG capable e.g. while checking UE release/capabilities it specifies CSG capability for UE in the UE registration request. According to a fourth alternative the femto node appears to UEs as a restricted or hybrid access femto node but operates to the core network or femto gateway as an open access mode femto node.

No. of Pages : 72 No. of Claims : 71

(12) PATENT APPLICATION PUBLICATION
(19) INDIA
(22) Date of filing of Application :05/11/2014
(21) Application No.2232/MUMNP/2014 A
(43) Publication Date : 24/07/2015

(54) Title of the invention : SPINDLE COMPRESSOR

(51) International classification :F04C18/08,F04C18/16
(31) Priority Document No :10 2012 009 103.6
(32) Priority Date :08/05/2012
(33) Name of priority country :Germany
(86) International Application No :PCT/EP2013/059512
Filing Date :07/05/2013
(87) International Publication No :WO 2013/167605
(61) Patent of Addition to Application Number :NA
Filing Date :NA
(62) Divisional to Application Number :NA
Filing Date :NA

(71)**Name of Applicant :**
1)STEFFENS Ralf
Address of Applicant :Abt Fulrad Str. 4 73728 Esslingen Germany
(72)**Name of Inventor :**
1)STEFFENS Ralf

(57) Abstract :
The spindle rotor pair of the spindle compressor has a 2 toothed spindle rotor (2) and a 3 toothed spindle rotor (3) which engages without contact in terms of teething. The wrap around angle with respect to the 2 toothed spindle rotor is at least 800°. A range of at least 30 m/sec is reached as the medium circumferential speed of the rotor head. Both of the rotors of the spindles of have in the end section circular sections (36.K and 36.F as well as 37.K and 37.F) and cycloidal profile contour edges (38 and 39) which in the case of the 2 toothed spindle rotor (2) are mainly configured above the toothing pitch circle (6) thereof and are of convex configuration and in the case of the 3 toothed spindle rotor (3) are mainly embodied below the toothing pitch circle (7) thereof and in a concave that is to say hollow fashion. The end sections of each spindle rotor are preferably of symmetrical configuration with the result that in each end section the centroid of the profile comes to rest on the respective centre of rotation of the rotor (M.2 or M.3).

No. of Pages : 37 No. of Claims : 23

(12) PATENT APPLICATION PUBLICATION
(19) INDIA
(22) Date of filing of Application :05/11/2014
(21) Application No.2234/MUMNP/2014 A
(43) Publication Date : 24/07/2015

(54) Title of the invention : METHOD FOR WINDING AN ELASTIC YARN PACKAGE

(51) International classification :B65H54/40,B65H81/08
(31) Priority Document No :61/620,794
(32) Priority Date :05/04/2012
(33) Name of priority country :U.S.A.
(86) International Application No :PCT/US2013/033859
Filing Date :26/03/2013
(87) International Publication No :WO 2013/151829
(61) Patent of Addition to Application Number :NA
Filing Date :NA
(62) Divisional to Application Number :NA
Filing Date :NA

(71)**Name of Applicant :**
1)INVISTA TECHNOLOGIES S.A.R.L.
Address of Applicant :Zweigniederlassung St. Gallen Kreuzackerstrasse 9 9000 St. Gallen Switzerland
(72)**Name of Inventor :**
1)KOSKOL Joseph E.

(57) Abstract :
A method is provided for winding an elastic yarn into a cylindrical substantially straight ended yarn package. The method includes feeding an elastic or elastomeric yarn at a substantially constant speed to a tube core to form the yarn package. The yarn package is rotated such that the yarn package with a substantially constant surface speed. The yarn is wound to form layers of helical coils while providing a helix angle variation of greater than zero up to +/ 80%.

No. of Pages : 15 No. of Claims : 16

(12) PATENT APPLICATION PUBLICATION
(19) INDIA
(22) Date of filing of Application :05/11/2014
(21) Application No.2235/MUMNP/2014 A
(43) Publication Date : 24/07/2015

(54) Title of the invention : TREATMENT OF CALCIUM CARBONATE CONTAINING MATERIALS FOR INCREASED FILLER LOAD IN PAPER

(51) International classification :C09C1/02,D21H17/00
(31) Priority Document No :12167650.6
(32) Priority Date :11/05/2012
(33) Name of priority country :EPO
(86) International Application No :PCT/EP2013/059197
Filing Date :02/05/2013
(87) International Publication No :WO 2013/167473
(61) Patent of Addition to Application Number :NA
Filing Date :NA
(62) Divisional to Application Number :NA
Filing Date :NA

(71)**Name of Applicant :**
1)OMYA INTERNATIONAL AG
Address of Applicant :Baslerstrasse 42 CH 4665 Oftringen Switzerland
(72)**Name of Inventor :**
1)GANTENBEIN Daniel
2)SCHOELKOPF Joachim
3)GANE Patrick A. C.

(57) Abstract :
The present invention concerns a process for preparing self binding pigment particles from an aqueous suspension of calcium carbonate containing material wherein an anionic binder and at least one cationic polymer are mixed with the suspension.

No. of Pages : 58 No. of Claims : 25

(12) PATENT APPLICATION PUBLICATION
(19) INDIA
(22) Date of filing of Application :05/11/2014
(21) Application No.2236/MUMNP/2014 A
(43) Publication Date : 24/07/2015

(54) Title of the invention : PHARMACEUTICAL COMPOSITION

(51) International classification :A61K9/00,A61K47/10,A61K47/14
(31) Priority Document No :1444/MUM/2012
(32) Priority Date :11/05/2012
(33) Name of priority country :India
(86) International Application No :PCT/GB2013/000211
Filing Date :10/05/2013
(87) International Publication No :WO 2013/167865
(61) Patent of Addition to Application Number :NA
Filing Date :NA
(62) Divisional to Application Number :NA
Filing Date :NA

(71)**Name of Applicant :**
1)CIPLA LIMITED
Address of Applicant :Peninsula Business Park Ganpatrao Kadam Marg Lowel Parel Mumbai 400 013 Maharashtra India
(72)**Name of Inventor :**
1)PURANDARE Shrinivas
2)MALHOTRA Geena

(57) Abstract :
The present invention relates to a pharmaceutical composition comprising voriconazole and an aqueous non aqueous or oily vehicle or a mixture thereof and optionally one or more pharmaceutically acceptable excipients; to a process for preparing such a composition and to the use of such a composition for the prevention or treatment of fungal infections.

No. of Pages : 20 No. of Claims : 23

(12) PATENT APPLICATION PUBLICATION
(19) INDIA
(22) Date of filing of Application :19/12/2014
(21) Application No.2580/MUMNP/2014 A
(43) Publication Date : 24/07/2015

(54) Title of the invention : METHODS AND APPARATUSES FOR DETERMINING RESELECTION PARAMETERS FOR DETECTED CELLS

(51) International classification :H04W36/22
(31) Priority Document No :61/678488
(32) Priority Date :01/08/2012
(33) Name of priority country :U.S.A.
(86) International Application No :PCT/US2013/053309
Filing Date :01/08/2013
(87) International Publication No :WO 2014/022718
(61) Patent of Addition to Application Number :NA
Filing Date :NA
(62) Divisional to Application Number :NA
Filing Date :NA

(71)**Name of Applicant :**
1)QUALCOMM INCORPORATED
Address of Applicant :Attn: International IP Administration 5775 Morehouse Drive San Diego California 92121 U.S.A.
(72)**Name of Inventor :**
1)WANG Fan
2)HU An Swol Clement
3)KAILASAM Sundaresan Tambaram
4)KHAN Uzma

(57) Abstract :
The present disclosure presents a method and apparatus for determining reselection parameters for detected cells. For example the method may include receiving system information block (SIB) data associated with one or more cells in a neighbor cell list (NCL). In such example the SIB data may include a ranking offset parameter associated with each of the NCL cells. Furthermore such an example method may include detecting a cell that is not in the NCL determining a reselection ranking value associated with each of the NCL cells the detected cell and the serving cell. In addition in some examples such method may include ranking the one or more NCL cells the detected cell and the serving cell in a ranking list based on the reselection ranking values. As such reselection parameters for detected cells may be determined.

No. of Pages : 45 No. of Claims : 29

(12) PATENT APPLICATION PUBLICATION
(21) Application No.2571/MUMNP/2014 A
(19) INDIA
(22) Date of filing of Application :18/12/2014
(43) Publication Date : 24/07/2015

(54) Title of the invention : MOBILE PLANT FOR ASPIRATION AND TREATMENT OF FUMES AND/OR DUST AND/OR GASEOUS MIXTURES

(51) International classification :B08B15/02,E04B1/343
(31) Priority Document No :RM2012A000309
(32) Priority Date :03/07/2012
(33) Name of priority country :Italy
(86) International Application No :PCT/IB2013/053398
Filing Date :30/04/2013
(87) International Publication No :WO 2014/006522
(61) Patent of Addition to Application Number :NA
Filing Date :NA
(62) Divisional to Application Number :NA
Filing Date :NA

(71)**Name of Applicant :**
1)G.A.P. S.P.A.
Address of Applicant :Via Giosue Carducci 47 I 24060 Sovere (Bergamo) Italy
(72)**Name of Inventor :**
1)ZUCCHI Francesco

(57) Abstract :
Described is a mobile plant for the aspiration treatment suppression and depuration of fumes and/or dust and/or gaseous mixtures coming from processing of metals or other materials and in particular from the processing of the metals with flame cutting by means of which even small production units or larger production units but with limited quantities of materials to be processed or processed in an occasional manner with significant emission of fumes and/or dust can prevent the dispersion into the atmosphere of the fumes and/or dust and can treat the fumes and dust; according to this invention the mobile plant for the aspiration treatment suppression and depuration of fumes and/or dust and/or gaseous mixtures coming from processing of metals or other materials comprises two separate units which integrate and act in conjunction with each other: a removable and transportable hood which is movable from a processing area to a standby area under which the processing is performed which cause fumes and dust and which has the purpose of preventing the dispersion of the fumes and dust into the atmosphere a mobile and transportable plant for the aspiration and treatment of the fumes and dust present in the hood the two parts being connected by connectors.

No. of Pages : 20 No. of Claims : 15

(12) PATENT APPLICATION PUBLICATION
(21) Application No.2572/MUMNP/2014 A
(19) INDIA
(22) Date of filing of Application :18/12/2014
(43) Publication Date : 24/07/2015

(54) Title of the invention : RECEPTION DEVICE INFORMATION PROCESSING METHOD PROGRAM TRANSMISSION DEVICE AND APPLICATION LINKING SYSTEM

(51) International classification :H04N21/435,H04N21/235
(31) Priority Document No :61/670,882
(32) Priority Date :12/07/2012
(33) Name of priority country :U.S.A.
(86) International Application No :PCT/JP2013/068147
Filing Date :02/07/2013
(87) International Publication No :WO 2014/010469
(61) Patent of Addition to Application Number :NA
Filing Date :NA
(62) Divisional to Application Number :NA
Filing Date :NA

(71)**Name of Applicant :**
1)SONY CORPORATION
Address of Applicant :1 7 1 Konan Minato ku Tokyo 1080075 Japan
(72)**Name of Inventor :**
1)YAMAGISHI Yasuaki
2)NAKAMURA Hitoshi

(57) Abstract :
The present disclosure relates to a reception device an information processing method a program a transmission device and an application linking system that enable a user appropriate application to be executed so as to link with the progression of the content being viewed. The reception device according to the present disclosure is provided with: an extraction unit that extracts from the content that has been played back signature data expressing the characteristics of the content; a profile generation unit that generates user profile data; a query generation unit that generates a query containing at least the signature data and the user profile data transmits the query to the transmission device and receives a response to the query the response having been matched to the user profile data by the transmission device and returned from the transmission device; and an application execution unit that on the basis of the received response acquires and executes an application to link with the content playback. The present disclosure is suitable for TV receivers and the like.

No. of Pages : 42 No. of Claims : 10

(12) PATENT APPLICATION PUBLICATION
(19) INDIA
(22) Date of filing of Application :18/12/2014
(21) Application No.2573/MUMNP/2014 A
(43) Publication Date : 24/07/2015

(54) Title of the invention : PARAMETERIZED SERVICES DESCRIPTOR FOR ADVANCED TELEVISION SERVICES

(51) International classification :H04N5/46
(31) Priority Document No :61/671,020
(32) Priority Date :12/07/2012
(33) Name of priority country :U.S.A.
(86) International Application No :PCT/US2013/045878
Filing Date :14/06/2013
(87) International Publication No :WO 2014/011355
(61) Patent of Addition to Application Number :NA
Filing Date :NA
(62) Divisional to Application Number :NA
Filing Date :NA

(71)**Name of Applicant :**
1)SONY CORPORATION
Address of Applicant :1 7 1 Konan Minato ku Tokyo 108 0075 Japan
(72)**Name of Inventor :**
1)EYER Mark

(57) Abstract :
A method computer program reception apparatus and information providing apparatus for accessing or providing access to content. The method includes receiving a transport stream from a content provider. A virtual channel table (VCT) is extracted from the transport stream. Further a determination is made as to whether one or more services corresponding to an entry included in the VCT are supported by the reception apparatus based on one or more parameterized service descriptor (PSD) instances which are associated with a predetermined Service Type and included in the VCT.

No. of Pages : 48 No. of Claims : 12

(12) PATENT APPLICATION PUBLICATION
(19) INDIA
(22) Date of filing of Application :18/12/2014
(21) Application No.2574/MUMNP/2014 A
(43) Publication Date : 24/07/2015

(54) Title of the invention : N SUBSTITUTED BENZAMIDES AND THEIR USE IN THE TREATMENT OF PAIN

(51) International classification :C07C311/51,C07D207/08,C07D213/82
(31) Priority Document No :PCT/IB2012/001324
(32) Priority Date :22/05/2012
(33) Name of priority country :Argentina
(86) International Application No :PCT/US2013/042111
Filing Date :21/05/2013
(87) International Publication No :WO 2013/177224
(61) Patent of Addition to Application Number :NA
Filing Date :NA
(62) Divisional to Application Number :NA
Filing Date :NA

(71)**Name of Applicant :**
1)GENENTECH INC.
Address of Applicant :1 DNA Way South San Francisco California 94080 4990 U.S.A..
2)XENON PHARMACEUTICALS INC.
(72)**Name of Inventor :**
1)ANDREZ Jean Christophe
2)CHOWDHURY Sultan
3)DECKER Shannon
4)DEHNHARDT Christoph Martin
5)FOCKEN Thilo
6)GRIMWOOD Michael Edward
7)HEMEON Ivan William
8)JIA Qi
9)LI Jun
10)ORTWINE Daniel F.
11)SAFINA Brian
12)SHENG Tao
13)SUN Shaoyi
14)SUTHERLIN Daniel P.
15)WILSON Michael Scott
16)ZENOVA Alla Yurevna

(57) Abstract :
The invention provides novel compounds having the general formula (I) and pharmaceutically acceptable salts thereof wherein the variables R subscript n ring A X L subscript m X B R R R R R and R have the meaning as described herein and compositions containing such compounds and methods for using such compounds and compositions.

No. of Pages : 598 No. of Claims : 63

(12) PATENT APPLICATION PUBLICATION
(19) INDIA
(22) Date of filing of Application :18/12/2014
(21) Application No.2575/MUMNP/2014 A
(43) Publication Date : 24/07/2015

(54) Title of the invention : SANITIZER SYSTEM

(51) International classification :C02F1/32
(31) Priority Document No :61/689167
(32) Priority Date :30/05/2012
(33) Name of priority country :U.S.A.
(86) International Application No :PCT/US2013/043485
Filing Date :30/05/2013
(87) International Publication No :WO 2013/181469
(61) Patent of Addition to Application Number :NA
Filing Date :NA
(62) Divisional to Application Number :NA
Filing Date :NA

(71)**Name of Applicant :**
1)BARNES Ronald L.
Address of Applicant :2823 Castle Pines Circle Owens Cross Roads AL 35763 U.S.A.
(72)**Name of Inventor :**
1)BARNES Ronald L.

(57) Abstract :
An enclosure 12) supports a water carrying tube (16) through which a flow of water to be sanitized passes. Water carrying tube (16) may be supported at each end by Venturis (24 26) mounted in ends of a housing (12). One or more ultraviolet lamps (14) extend along tube (16). Air tubes (62a 62b 72) are connected to Venturi suction ports (30) or an external use (Fig. 7) and have openings (64) therealong are oriented very close to the ultraviolet lamps (14) with openings (64) facing the ultraviolet tubes (14) in order to draw ozonated air directly from near the surface of the ultraviolet lamps (14). Ultraviolet lamps (14) may be pulsed with high power pulses of a frequency and duration determined by an air flow rate through the air tubes (62a 62b 72) in order to maximize ozone production. An external Venturi suction port may also be provided.

No. of Pages : 23 No. of Claims : 20

(12) PATENT APPLICATION PUBLICATION
(21) Application No.2576/MUMNP/2014 A
(19) INDIA
(22) Date of filing of Application :18/12/2014
(43) Publication Date : 24/07/2015

(54) Title of the invention : TISSUE REPAIR DEVICES AND SCAFFOLDS

(51) International classification :A61L27/56,A61F2/02,A61F2/28
(31) Priority Document No :61/653019
(32) Priority Date :30/05/2012
(33) Name of priority country :U.S.A.
(86) International Application No :PCT/US2013/043336
Filing Date :30/05/2013
(87) International Publication No :WO 2013/181375
(61) Patent of Addition to Application Number :NA
Filing Date :NA
(62) Divisional to Application Number :NA
Filing Date :NA

(71)**Name of Applicant :**
1)NEW YORK UNIVERSITY
Address of Applicant :One Park Avenue 6th Floor New York NY 10016 5802 U.S.A
(72)**Name of Inventor :**
1)RICCI John L.
2)CLARK Elizabeth
3)COELHO Paulo
4)VAN THOMPSON Dianne Rekow
5)SMAY James

(57) Abstract :
The present invention relates to multiphasic three dimensionally printed tissue repair devices or scaffolds useful for promoting bone growth and treating bone fracture defect or deficiency methods for making the same and methods for promoting bone growth and treating bone fracture defect or deficiency using the same. The scaffold has a porous bone ingrowth area containing interconnected struts surrounded by a microporous shell. At the ends of the scaffold the shell may be extended as a guide flange to stabilize the scaffold between ends of bone. The center of the scaffold may be empty and may serve as a potential marrow space. The porous ingrowth structure may be infiltrated with a soluble filler or carrier such as for example calcium sulfate which may be infiltrated with one or more of an antibiotic a growth factor a differentiation factors a cytokine a drug or a combination of these agents.

No. of Pages : 55 No. of Claims : 20

(12) PATENT APPLICATION PUBLICATION
(21) Application No.2577/MUMNP/2014 A
(19) INDIA
(22) Date of filing of Application :18/12/2014
(43) Publication Date : 24/07/2015

(54) Title of the invention : RIBBED FOUNDATION FOR SUPERSTRUCTURES AND METHOD FOR PRODUCING THE FOUNDATION

(51) International classification :E02D27/42
(31) Priority Document No :P201230877
(32) Priority Date :06/06/2012
(33) Name of priority country :Spain
(86) International Application No :PCT/ES2013/070367
Filing Date :06/06/2013
(87) International Publication No :WO 2013/182728
(61) Patent of Addition to Application Number :NA
Filing Date :NA
(62) Divisional to Application Number :NA
Filing Date :NA

(71)**Name of Applicant :**
1)GESTAMP HYBRID TOWERS S.L.
Address of Applicant :Calle Prolongaci³n de Embajadores s/n E 28053 Madrid Spain
(72)**Name of Inventor :**
1)ABAD HUBER Cesar
2)FRANCO REY Jorge

(57) Abstract :
The present invention relates to a reinforced concrete foundation system for erecting superstructures that transmit high axial loads shearing forces and/or flexural moments at individual points such as for example wind turbines. The foundation that is the subject matter of the present invention is formed by an upper reinforced concrete slab poured in situ of polygonal or circular footprint and which is made rigid at the bottom by means of reinforced concrete ribs of rectangular or trapezial cross section which are arranged radially. The method makes provision for said ribs to be produced from concrete in situ or alternatively by means of prefabricated elements always working jointly with the upper slab. This new foundation considerably reduces the costs of forming traditional foundations for this type of superstructure by considerably improving completion deadlines.

No. of Pages : 23 No. of Claims : 12

(12) PATENT APPLICATION PUBLICATION
(19) INDIA
(22) Date of filing of Application :06/11/2014
(21) Application No.2243/MUMNP/2014 A
(43) Publication Date : 24/07/2015

(54) Title of the invention : MEDIA ACCESS CONTROL FOR ULTRA-WIDE BAND COMMUNICATION

(51) International classification :H04B 1/69, H04B 7/26
(31) Priority Document No :60/794,030
(32) Priority Date :20/04/2006
(33) Name of priority country :U.S.A.
(86) International Application No :PCT/US2007/067025
Filing Date :20/04/2007
(87) International Publication No :WO/2007/124392
(61) Patent of Addition to Application Number :NA
Filing Date :NA
(62) Divisional to Application Number :2318/MUMNP/2008
Filed on :31/10/2008

(71)**Name of Applicant :**
1)QUALCOMM INCORPORATED
Address of Applicant :Attn. International IP Administration, 5775 Morehouse Drive, San Diego, California 92121-1714, United States of America.
(72)**Name of Inventor :**
1)JIA, Zhanfeng
2)LEE, Chong U.
3)JULIAN, David Jonathan

(57) Abstract :
Media access control is provided for an ultra-wide band medium. The media access control may employ a peer-to-peer network topology. The media access control may employ a reduced addressing scheme. Concurrent ultra-wide band channels may be established through the use of a pulse division multiple access channelization scheme. Multiple media access control states may be defined whereby each state may be associated with one or more of different channel parameter state information, different duty cycles, and different synchronization status

No. of Pages : 64 No. of Claims : 38

(12) PATENT APPLICATION PUBLICATION
(19) INDIA
(22) Date of filing of Application :06/11/2014
(21) Application No.2246/MUMNP/2014 A
(43) Publication Date : 24/07/2015

(54) Title of the invention : A COOKING APPARATUS A COOKING POT AND A METHOD FOR COOKING

(51) International classification :A47J27/62,A47J27/12,F24C7/08
(31) Priority Document No :1250578-0
(32) Priority Date :04/06/2012
(33) Name of priority country :Sweden
(86) International Application No :PCT/SE2013/050434
Filing Date :23/04/2013
(87) International Publication No :WO 2013/184057
(61) Patent of Addition to Application Number :NA
Filing Date :NA
(62) Divisional to Application Number :NA
Filing Date :NA

(71)**Name of Applicant :**
1)BBBL INNOVATION AB
Address of Applicant :Munkbron 11 S 111 28 Stockholm Sweden
(72)**Name of Inventor :**
1)LAGERL–F Johan

(57) Abstract :
The invention relates to a cooking apparatus for simultaneous cooking of a plurality of food items. The apparatus has a control unit(1)with a conductor(7) arranged to be connected to an electric energy supply and has switching means.10 According to the invention the control unit (1) is provided with a plurality of electrical connection means (2a 2b 2c 2d). Each connection means (2a 2b 2c 2d) is arranged to be connectable to a cooking pot (4a 4b 4c 4d) for supply of electric energy to a respective cooking pot (4a 4b 4c 4d). The control unit (1) is arranged to allow simultaneous supply of electric energy through the plurality of 1 connection means (2a 2b 2c 2d). The invention also relates to a cooking pot (4a 4b 4c 4d) with heating means (3a 3b 3c) to supply heat to a food item (5a 5b 5c 5d). The cooking pot (4a 4b 4c 4d) has an electric connection unit (9a 9b 9c 9d). The connection unit (9a 9b 9c 9d) is arranged to be connected to either one of a plurality of 20 connection means (2a 2b 2c 2d) of a control unit (1). The invention also relates to a corresponding method for cooking.

No. of Pages : 22 No. of Claims : 23

(12) PATENT APPLICATION PUBLICATION
(19) INDIA
(22) Date of filing of Application :22/12/2014
(21) Application No.2587/MUMNP/2014 A
(43) Publication Date : 24/07/2015

(54) Title of the invention : A METHOD OF ORGANIZING AND ACCESSING INFORMATION

(51) International classification :G06F17/00,G06Q50/10
(31) Priority Document No :61/661094
(32) Priority Date :18/06/2012
(33) Name of priority country :U.S.A.
(86) International Application No :PCT/US2013/046393
Filing Date :18/06/2013
(87) International Publication No :WO 2013/192223
(61) Patent of Addition to Application Number :NA
Filing Date :NA
(62) Divisional to Application Number :NA
Filing Date :NA

(71)**Name of Applicant :**
1)ROTH Steven W.
Address of Applicant :38 Caumsett Woods Lane Woodbury NY 11797 U.S.A.
2)BARRY Jeffrey
(72)**Name of Inventor :**
1)ROTH Steven W.
2)BARRY Jeffrey

(57) Abstract :
A method of organizing and accessing information on a website comprising providing a plurality of primary category links associated with a plurality of primary categories providing a plurality of topic links each associated with one or more art topics each topic link having a topic name and a topic image and providing a content region for presenting content for an art topic and having a content type associated with a primary category wherein navigation around the website may be harmonized by art topic.

No. of Pages : 55 No. of Claims : 46

(12) PATENT APPLICATION PUBLICATION
(19) INDIA
(22) Date of filing of Application :22/12/2014
(21) Application No.2588/MUMNP/2014 A
(43) Publication Date : 24/07/2015

(54) Title of the invention : BLISTER ADVANCEMENT MECHANISM COMPRISING AN ACTUATOR PLATE

(51) International classification :A61M15/00
(31) Priority Document No :2012/06167
(32) Priority Date :25/05/2012
(33) Name of priority country :Turkey
(86) International Application No :PCT/TR2013/000171
Filing Date :21/05/2013
(87) International Publication No :WO 2013/176643
(61) Patent of Addition to Application Number :NA
Filing Date :NA
(62) Divisional to Application Number :NA
Filing Date :NA

(71)**Name of Applicant :**
1)ARVEN ILAC SANAYI VE TICARET A.S.
Address of Applicant :Balabandere Cad. Ilac Sanayi Yolu No: 14 Istinye Istanbul 34460 Turkey
(72)**Name of Inventor :**
1)TOKSOZ Zafer
2)CIFTER Umit
3)TURKYILMAZ Ali
4)MUTLU Onur

(57) Abstract :
The present invention relates to improvements made in the blister advancement mechanism of dry powder inhaler devices. A dry powder inhaler device (11) mechanism comprises an actuator plate and a transmission wheel.

No. of Pages : 26 No. of Claims : 6

(12) PATENT APPLICATION PUBLICATION
(19) INDIA
(22) Date of filing of Application :22/12/2014
(21) Application No.2589/MUMNP/2014 A
(43) Publication Date : 24/07/2015

(54) Title of the invention : ANODE ACTIVE MATERIAL FOR LITHIUM SECONDARY BATTERY AND LITHIUM SECONDARY BATTERY INCLUDING SAME

(51) International classification :H01M4/38,H01M4/48,H01M4/13
(31) Priority Document No :10-2012-0138258
(32) Priority Date :30/11/2012
(33) Name of priority country :Republic of Korea
(86) International Application No :PCT/KR2013/011031
Filing Date :29/11/2013
(87) International Publication No :WO 2014/084678
(61) Patent of Addition to Application Number :NA
Filing Date :NA
(62) Divisional to Application Number :NA
Filing Date :NA

(71)**Name of Applicant :**
1)LG CHEM LTD.
Address of Applicant :128 Yeoui daero Yeongdeungpo gu Seoul 150 721 Republic of Korea
(72)**Name of Inventor :**
1)LEE Yong Ju
2)KANG Yoon Ah
3)KIM Je Young
4)CHOI Seung Youn
5)LEE Mi Rim
6)JUNG Hye Ran
7)YOO Jung Woo

(57) Abstract :
An anode active material according to the present invention is an anode active material formed from silicon particles and the anode active material includes at least one silicon particle among silicon a silicon oxide and a silicon alloy wherein the outer shape of the silicon particle is a polyhedron. The present invention provides an electrode active material having high capacity and excellent lifespan wherein the lifespan is a problem when using the anode active material formed from silicon and a lithium secondary battery including the same.

No. of Pages : 19 No. of Claims : 9

(12) PATENT APPLICATION PUBLICATION
(21) Application No.2581/MUMNP/2014 A
(19) INDIA
(22) Date of filing of Application :19/12/2014
(43) Publication Date : 24/07/2015

(54) Title of the invention : APPARATUS AND METHODS FOR CONFIGURING CQI AND HARQ FEEDBACK IN MULTI FLOW COMMUNICATION

(51) International classification :H04L1/00,H04L1/18,H04L5/00
(31) Priority Document No :61/679592
(32) Priority Date :03/08/2012
(33) Name of priority country :U.S.A.
(86) International Application No :PCT/US2013/053507
Filing Date :02/08/2013
(87) International Publication No :WO 2014/022822
(61) Patent of Addition to Application Number :NA
Filing Date :NA
(62) Divisional to Application Number :NA
Filing Date :NA

(71)**Name of Applicant :**
1)QUALCOMM INCORPORATED
Address of Applicant :Attn: International IP Administration 5775 Morehouse Drive San Diego California 92121 U.S.A..
(72)**Name of Inventor :**
1)BHARADWAJ Arjun
2)SAMBHWANI Sharad Deepak

(57) Abstract :
A method that includes determining a multi flow configuration for a multi flow communication of a user equipment (UE) wherein the multi flow configuration identifies whether a multi frequency configuration is utilized and whether multiple input multiple output (MIMO) communication is configured for at least one cell in the multi flow communication determining one or more cell groups based on the multi flow configuration and determining at least one of a channel quality indicator (CQI) repetition rule or a hybrid automatic repeat request acknowledgment (HARQ ACK) repetition rule for the multi flow communication based on one or more of the multi flow configuration or the one or more cell groups.

No. of Pages : 37 No. of Claims : 24

(12) PATENT APPLICATION PUBLICATION
(19) INDIA
(22) Date of filing of Application :19/12/2014
(21) Application No.2583/MUMNP/2014 A
(43) Publication Date : 24/07/2015

(54) Title of the invention : METHOD AND APPARATUS FOR SOUNDING REFERENCE SIGNAL TRIGGERING AND POWER CONTROL FOR COORDINATED MULTI POINT OPERATIONS

(51) International classification :H04W52/32
(31) Priority Document No :61/679596
(32) Priority Date :03/08/2012
(33) Name of priority country :U.S.A.
(86) International Application No :PCT/US2013/053364
Filing Date :02/08/2013
(87) International Publication No :WO 2014/022747
(61) Patent of Addition to Application Number :NA
Filing Date :NA
(62) Divisional to Application Number :NA
Filing Date :NA

(71)**Name of Applicant :**
1)QUALCOMM INCORPORATED
Address of Applicant :ATTN: International IP Administration 5775 Morehouse Drive San Diego California 92121 1714 U.S.A.
(72)**Name of Inventor :**
1)XU Hao
2)CHEN Wanshi
3)GAAL Peter

(57) Abstract :
Certain aspects of the present disclosure provide methods and apparatus for sounding reference signal (SRS) triggering and power control for coordinated multi point (CoMP) operations. One method generally includes maintaining separate power control processes for at least a first aperiodic SRS (A SRS) and a second A SRS receiving in a first subframe a downlink transmission triggering transmission of at least one of the first and second A SRS in a subsequent subframe identifying which of the first and second A SRS to transmit in the subsequent subframe receiving a first power control command that indicates a power control value to apply to the identified A SRS and transmitting the identified A SRS based in accordance with the first power control command.

No. of Pages : 57 No. of Claims : 44

(12) PATENT APPLICATION PUBLICATION
(19) INDIA
(22) Date of filing of Application :20/12/2014
(21) Application No.2584/MUMNP/2014 A
(43) Publication Date : 24/07/2015

(54) Title of the invention : ANIMAL PAW PAD

(51) International classification :A01K29/00
(31) Priority Document No :61/653886
(32) Priority Date :31/05/2012
(33) Name of priority country :U.S.A.
(86) International Application No :PCT/US2013/033764
Filing Date :25/03/2013
(87) International Publication No :WO 2013/180826
(61) Patent of Addition to Application Number :NA
Filing Date :NA
(62) Divisional to Application Number :NA
Filing Date :NA

(71)**Name of Applicant :**
1)KERLER Carol
Address of Applicant :101 Newmarket Road Garden City NY 11530 U.S.A.
(72)**Name of Inventor :**
1)KERLER Carol

(57) Abstract :
An animal paw pad comprising a base having an enclosure wherein said base has a first side and a second side disposed opposite of said first side. There can be a gel disposed inside of the enclosure. There can be at least one adhesive coupled to the first side and at least one roughened section coupled to the second side.

No. of Pages : 24 No. of Claims : 18

(12) PATENT APPLICATION PUBLICATION
(19) INDIA
(22) Date of filing of Application :20/12/2014
(21) Application No.2585/MUMNP/2014 A
(43) Publication Date : 24/07/2015

(54) Title of the invention : FLUORESCENT FUSION POLYPEPTIDE BIOSENSOR COMPRISING SAID POLYPEPTIDE AND USES THEREOF

(51) International classification :G01N33/50,C07K14/47
(31) Priority Document No :12382272.8
(32) Priority Date :06/07/2012
(33) Name of priority country :EPO
(86) International Application No :PCT/EP2013/064400
Filing Date :08/07/2013
(87) International Publication No :WO 2014/006225
(61) Patent of Addition to Application Number :NA
Filing Date :NA
(62) Divisional to Application Number :NA
Filing Date :NA

(71)**Name of Applicant :**
1)INNOVATIVE TECHNOLOGIES IN BIOLOGICAL SYSTEMS S.L.
Address of Applicant :Parque Tecnol³gico de Bizkaia Edificio 502 1° E 48160 Derio Spain
(72)**Name of Inventor :**
1)KORTAZAR ZABALA Danel
2)SALADO POGONZA Aida Clarisa
3)G • MIZ MATA Jorge
4)ROURA FERRER Meritxell
5)MELLA LPEZ Rosa
6)VILLAC‰ LOZANO Patricia

(57) Abstract :
The present invention refers to a fluorescent fusion polypeptide capable of changing its localization within the cell from the cell cytoplasmic membrane to the retention vesicles upon an increase in the concentration of second messengers within the cell cytoplasm comprising a membrane localization peptide a second messenger transduction protein binding peptide a reticulum retention signal and a fluorescent peptide wherein: a. the membrane localization peptide is located at the N terminus of the fluorescent fusion polypeptide and is physically bound optionally through a linker to the fluorescent peptide which in turn is physically bound optionally through a linker to the second messenger transduction protein binding peptide; and b. the second messenger transduction protein binding peptide is physically bound optionally through a linker to the reticulum retention signal which in turn is located at the C terminus of the fluorescent fusion polypeptide.

No. of Pages : 65 No. of Claims : 30

(12) PATENT APPLICATION PUBLICATION
(19) INDIA
(22) Date of filing of Application :07/11/2014
(21) Application No.2252/MUMNP/2014 A
(43) Publication Date : 24/07/2015

(54) Title of the invention : ANTIRETROVIRAL COMPOSITION

(51) International classification :A61K9/16,A61K9/20,A61K31/427
(31) Priority Document No :1380/MUM/2012
(32) Priority Date :03/05/2012
(33) Name of priority country :India
(86) International Application No :PCT/GB2013/000193
Filing Date :03/05/2013
(87) International Publication No :WO 2013/164559
(61) Patent of Addition to Application Number :NA
Filing Date :NA
(62) Divisional to Application Number :NA
Filing Date :NA

(71)**Name of Applicant :**
1)CIPLA LIMITED
Address of Applicant :Cipla House Peninsula Business Park Ganpatrao Kadam Marg Lower Parel Mumbai 400 013 Maharashtra India
(72)**Name of Inventor :**
1)PURANDARE Shrinivas Madhukar
2)MALHOTRA Geena

(57) Abstract :
The present invention provides a pharmaceutical solid oral sprinkle composition comprising one or more antiretroviral drugs and a method of manufacturing the same. The present invention is particularly useful for treatment of an HIV infection AIDS related complex or AIDS.

No. of Pages : 44 No. of Claims : 44

(12) PATENT APPLICATION PUBLICATION
(21) Application No.2253/MUMNP/2014 A
(19) INDIA
(22) Date of filing of Application :07/11/2014
(43) Publication Date : 24/07/2015

(54) Title of the invention : GROUNDING SHOE AND VEHICLE

(51) International classification :H01R41/00,H01R4/64
(31) Priority Document No :2012-132980
(32) Priority Date :12/06/2012
(33) Name of priority country :Japan
(86) International Application No :PCT/JP2013/062390
Filing Date :26/04/2013
(87) International Publication No :WO 2013/187142
(61) Patent of Addition to Application Number :NA
Filing Date :NA
(62) Divisional to Application Number :NA
Filing Date :NA

(71)**Name of Applicant :**
1)MITSUBISHI HEAVY INDUSTRIES LTD.
Address of Applicant :16 5 Konan 2 chome Minato ku Tokyo 1088215 Japan
(72)**Name of Inventor :**
1)YAMADA Shigeyuki
2)KATAHIRA Kousuke
3)ANDOH Hiroyuki

(57) Abstract :
A grounding shoe provided to a vehicle so as to face the track side grounding rail the grounding shoe being provided with: a collector unit having an electroconductive body; and a holding part which holds and fixes one end of the electroconductive body so that the collector unit can be energized as well as attached/detached which is mounted on the vehicle and which is in contact with the electroconductive body.

No. of Pages : 65 No. of Claims : 15

(12) PATENT APPLICATION PUBLICATION
(19) INDIA
(22) Date of filing of Application :07/11/2014
(21) Application No.2254/MUMNP/2014 A
(43) Publication Date : 24/07/2015

(54) Title of the invention : STRAIN PRODUCING TURANOSE AND USES THEREOF

(51) International classification :C12R1/425,C12P19/12,A23L1/09
(31) Priority Document No :1254484
(32) Priority Date :16/05/2012
(33) Name of priority country :France
(86) International Application No :PCT/FR2013/051054
Filing Date :15/05/2013
(87) International Publication No :WO 2013/171424
(61) Patent of Addition to Application Number :NA
Filing Date :NA
(62) Divisional to Application Number :NA
Filing Date :NA

(71)**Name of Applicant :**
1)ROQUETTE FRERES
Address of Applicant :1 rue de la Haute Loge F 62136 Lestrem France
(72)**Name of Inventor :**
1)DEFRETIN Sophie
2)RAECKELBOOM Damien

(57) Abstract :
Serratia plymuthicaThe present invention relates to a strain of capable of producing turanose and to the uses thereof.

No. of Pages : 22 No. of Claims : 14

(12) PATENT APPLICATION PUBLICATION
(19) INDIA
(22) Date of filing of Application :07/11/2014
(21) Application No.2255/MUMNP/2014 A
(43) Publication Date : 24/07/2015

(54) Title of the invention : METHOD AND DEVICE FOR TRANSFER OF ENERGY

(51) International classification :F25B9/14,F25B9/04
(31) Priority Document No :61/659,680
(32) Priority Date :14/06/2012
(33) Name of priority country :U.S.A.
(86) International Application No :PCT/IL2013/000057
Filing Date :13/06/2013
(87) International Publication No :WO 2013/186770
(61) Patent of Addition to Application Number :NA
Filing Date :NA
(62) Divisional to Application Number :NA
Filing Date :NA

(71)**Name of Applicant :**
1)BELIAVSKY Yan
Address of Applicant :Hertzl Street 50 Flat 4 24952 Maalot Israel
(72)**Name of Inventor :**
1)BELIAVSKY Yan

(57) Abstract :
A method and device for transfer of thermal energy is described which comprise providing a vessel with a compressible fluid medium subjecting the compressible fluid medium to a pressure gradient and exposing the compressible fluid medium to sound waves capable to induce fluctuations of density accompanied by establishing of pressure gradient waves propagating through the compressible fluid medium and transferring the thermal energy.

No. of Pages : 42 No. of Claims : 19

(12) PATENT APPLICATION PUBLICATION
(19) INDIA
(22) Date of filing of Application :23/12/2014
(21) Application No.2600/MUMNP/2014 A
(43) Publication Date : 24/07/2015

(54) Title of the invention : DOSING DEVICE IN PARTICULAR FOR POWDER

(51) International classification :B65B37/02,B65B39/00,B65B1/06
(31) Priority Document No :1256404
(32) Priority Date :04/07/2012
(33) Name of priority country :France
(86) International Application No :PCT/EP2013/063883
Filing Date :02/07/2013
(87) International Publication No :WO 2014/006015
(61) Patent of Addition to Application Number :NA
Filing Date :NA
(62) Divisional to Application Number :NA
Filing Date :NA

(71)**Name of Applicant :**
1)COMMISSARIAT L‰NERGIE ATOMIQUE ET AUX ‰NERGIES ALTERNATIVES
Address of Applicant :25 Rue Leblanc Btiment Le Ponant D F 75015 Paris France
2)CH3
3)EKIUM
(72)**Name of Inventor :**
1)BRENNEIS Christophe
2)GOBIN Fran§ois
3)CHERPIN Robert
4)BOYER Jean Fran§ois
5)VIALLE Cdric
6)MOREL Nicolas

(57) Abstract :
This dosing device (1) comprises a container (2) and a plug (4) comprising in addition to a portion (15) for connection to the container two mobile outer portions (16 and 17). One of the mobile portions (16) is held in place during dosing while the container (2) rotates continually to assist the flow of the content of same; the other outer portion (17) can be turned as necessary to adjust the opening of the plug. The movements can be carried out by a machine on which the dosing device is positioned upside down with the plug facing downwards.

No. of Pages : 20 No. of Claims : 13

(12) PATENT APPLICATION PUBLICATION
(21) Application No.2601/MUMNP/2014 A
(19) INDIA
(22) Date of filing of Application :23/12/2014
(43) Publication Date : 24/07/2015

(54) Title of the invention : ULTRASONOGRAPHIC IMAGES PROCESSING

(51) International classification :A61B8/00
(31) Priority Document No :61/689332
(32) Priority Date :04/06/2012
(33) Name of priority country :U.S.A.
(86) International Application No :PCT/IL2013/050480
Filing Date :04/06/2013
(87) International Publication No :WO 2013/183051
(61) Patent of Addition to Application Number :NA
Filing Date :NA
(62) Divisional to Application Number :NA
Filing Date :NA

(71)**Name of Applicant :**
1)TEL HASHOMER MEDICAL RESEARCH INFRASTRUCTURE AND SERVICES LTD.
Address of Applicant :The Chaim Sheba Medical Center Tel HaShomer 5262000 Ramat Gan Israel
(72)**Name of Inventor :**
1)SHASHAR David
2)ACHIRON Reuven
3)MAYER Arnaldo

(57) Abstract :
A computerized method of adapting a presentation of ultrasonographic images during an ultrasonographic fetal evaluation. The method comprises performing an analysis of a plurality of ultrasonographic images captured by an ultrasonographic probe during an evaluation of a fetus automatically identifying at least one location of at least one anatomical landmark of at least one reference organ or tissue or body fluid of the fetus in the plurality of ultrasonographic images based on an outcome of the analysis automatically localizing a region of interest (ROI) in at least some of the plurality of ultrasonographic images by using at least one predefined locational anatomical property of the at least one anatomical landmark and concealing the ROI in a presentation of the at least some ultrasonographic images during the evaluation. At least one anatomical landmark is imaged in the presentation and not concealed by the ROI.

No. of Pages : 51 No. of Claims : 33

(12) PATENT APPLICATION PUBLICATION
(19) INDIA
(22) Date of filing of Application :22/12/2014
(21) Application No.2593/MUMNP/2014 A
(43) Publication Date : 24/07/2015

(54) Title of the invention : HIGH EFFICIENCY DYNAMIC SLURRY LIQUID SEPARATING FILTRATION APPARATUS AND FILTRATION METHOD THEREFOR

(51) International classification :B01D29/41,B01D29/66
(31) Priority Document No :201210221911.8
(32) Priority Date :29/06/2012
(33) Name of priority country :China
(86) International Application No :PCT/CN2013/074684
Filing Date :25/04/2013
(87) International Publication No :WO 2014/000500
(61) Patent of Addition to Application Number :NA
Filing Date :NA
(62) Divisional to Application Number :NA
Filing Date :NA

(71)**Name of Applicant :**
1)SUNSHINE KAIDI NEW ENERGY GROUP CO. LTD.
Address of Applicant :Kaidi Building T1 Jiangxia Avenue East Lake Hi Tech Development Zone Wuhan Hubei 430223 China
(72)**Name of Inventor :**
1)CHEN Yilong
2)JIN Jiaqi
3)ZHANG Yanfeng
4)JIANG Manyi

(57) Abstract :
A high efficiency dynamic slurry liquid separating filtration apparatus and a filtration method therefor. The filtration apparatus comprises a filter cylinder body (1) a filter pipe (2a) and a filter core on the filter pipe (2a) arranged within the filter cylinder body (1) a material inlet (3) on the filter cylinder body (1) a solid residue outlet (4) provided at the bottom part of the filter cylinder body (1) and a filtrate outlet (5) provided at the mid bottom part of the filter cylinder body (1) where the filter core is multiple filter plates (2b) connected with the filter pipe (2a) where the filter plates (2b) are perpendicular to the longitudinal axis of the filter cylinder body (1) and where the upper end of the filter pipe (2a) is connected to a rotary shaft of an inverter motor (7). The filtration method comprises: preheating the filtration apparatus; after filtering for a period of time adjusting the rotational speed of the inverter motor (7) thus removing a thin layer of filter residue cake on the filter plates (2b).

No. of Pages : 22 No. of Claims : 10

(12) PATENT APPLICATION PUBLICATION
(19) INDIA
(22) Date of filing of Application :23/12/2014
(21) Application No.2594/MUMNP/2014 A
(43) Publication Date : 24/07/2015

(54) Title of the invention : METHODS AND APPARATUS FOR REPORTING CHANNEL QUALITY INDICATOR (CQI)

(51) International classification :H04L1/00
(31) Priority Document No :61/679515
(32) Priority Date :03/08/2012
(33) Name of priority country :U.S.A.
(86) International Application No :PCT/US2013/052742
Filing Date :30/07/2013
(87) International Publication No :WO 2014/022406
(61) Patent of Addition to Application Number :NA
Filing Date :NA
(62) Divisional to Application Number :NA
Filing Date :NA

(71)**Name of Applicant :**
1)QUALCOMM INCORPORATED
Address of Applicant :ATTN: International IP Administration 5775 Morehouse Drive San Diego California 92121 1714 U.S.A..
(72)**Name of Inventor :**
1)PALANIVELU Arul Durai Murugan
2)BHATTAD Kapil
3)GORE Dhananjay Ashok
4)MANTRAVADI Ashok

(57) Abstract :
Certain aspects of the present disclosure relate to techniques for reporting Channel Quality Indicator (CQI). In certain aspects a User Equipment (UE) may schedule switch from at least a first set of zero or more antennas used by the UE to at least one second set of zero or more antennas wherein the first and second sets differ by at least one antenna. The UE may determine a Channel Quality Indicator (CQI) to be reported from the UE for use at a base station in a subsequent CQI subframe set based at least on the scheduled switch. The UE may thereafter transmit the CQI to the base station.

No. of Pages : 45 No. of Claims : 66

(12) PATENT APPLICATION PUBLICATION
(19) INDIA
(22) Date of filing of Application :23/12/2014
(21) Application No.2595/MUMNP/2014 A
(43) Publication Date : 24/07/2015

(54) Title of the invention : METHOD OF HANDLING COMPLEX VARIANTS OF WORDS THROUGH PREFIX TREE BASED DECODING FOR DEVANAGIRI OCR

(51) International classification :G06K9/00,G06K9/72,G06K9/68
(31) Priority Document No :61/673606
(32) Priority Date :19/07/2012
(33) Name of priority country :U.S.A.
(86) International Application No :PCT/US2013/048830
Filing Date :29/06/2013
(87) International Publication No:WO 2014/014640
(61) Patent of Addition to Application Number :NA
Filing Date :NA
(62) Divisional to Application Number :NA
Filing Date :NA

(71)**Name of Applicant :**
1)QUALCOMM INCORPORATED
Address of Applicant :Attn: International IP Administration 5775 Morehouse Drive San Diego CA 92121 1714 U.S.A.
(72)**Name of Inventor :**
1)BARMAN Kishor K.
2)BAHETI Pawan Kumar
3)KRISHNA KUMAR Raj Kumar

(57) Abstract :
An electronic device and method identify a block of text in an image of real world captured by a mobile devices camera slice sub blocks from the block and identify characters in the sub blocks that form a first sequence which is used with a predetermined set of sequences to identify a second sequence therein. The second sequence may be identified as recognized (as a modifier absent word) when not associated with additional information. When the second sequence is associated with additional information a check is made on pixels in the image based on a test specified in the additional information. When the test is satisfied a copy of the second sequence in combination with the modifier is identified as recognized (as a modifier present word). Storage and use of modifier information in addition to a set of sequences of characters enables recognition of words with or without modifiers.

No. of Pages : 61 No. of Claims : 29

(12) PATENT APPLICATION PUBLICATION
(21) Application No.2596/MUMNP/2014 A
(19) INDIA
(22) Date of filing of Application :23/12/2014
(43) Publication Date : 24/07/2015

(54) Title of the invention : TRANSMISSION DEVICE INFORMATION PROCESSING METHOD PROGRAM RECEPTION DEVICE AND APPLICATION LINKING SYSTEM

(51) International classification :H04N21/235,H04N21/435
(31) Priority Document No :61/670,900
(32) Priority Date :12/07/2012
(33) Name of priority country :U.S.A.
(86) International Application No :PCT/JP2013/068148
Filing Date :02/07/2013
(87) International Publication No :WO 2014/010470
(61) Patent of Addition to Application Number :NA
Filing Date :NA
(62) Divisional to Application Number :NA
Filing Date :NA

(71)**Name of Applicant :**
1)SONY CORPORATION
Address of Applicant :1 7 1 Konan Minato ku Tokyo 1080075 Japan
(72)**Name of Inventor :**
1)YAMAGISHI Yasuaki

(57) Abstract :
The present disclosure relates to a transmission device an information processing method a program a reception device and an application linking system that when an application is executed so as to link with the progression of the content being viewed enable the sharing of interfaces that for a plurality of ACR servers used in content identification. The transmission device which is the first aspect of the present disclosure is provided with one or a plurality of content identifying units and a timeline data generation unit that generates timeline data and collectively supplies common timeline data to the one or plurality of content identifying units. The present disclosure is appropriate for broadcasting station broadcasting devices and the like.

No. of Pages : 59 No. of Claims : 11

(12) PATENT APPLICATION PUBLICATION
(19) INDIA
(22) Date of filing of Application :22/12/2014
(21) Application No.2590/MUMNP/2014 A
(43) Publication Date : 24/07/2015

(54) Title of the invention : DEVICE FOR WINDING BEAD RING BINDING THREAD

(51) International classification :B29D30/48,B21F37/00
(31) Priority Document No :NA
(32) Priority Date :NA
(33) Name of priority country :NA
(86) International Application No :PCT/JP2012/065772
Filing Date :20/06/2012
(87) International Publication No :WO 2013/190667
(61) Patent of Addition to Application Number :NA
Filing Date :NA
(62) Divisional to Application Number :NA
Filing Date :NA

(71)**Name of Applicant :**
1)FUJI SEIKO CO. LTD.
Address of Applicant :60 Hirakata 13 chome Fukuju cho Hashima shi Gifu 5016257 Japan
2)FUJI SHOJI CO. LTD.
(72)**Name of Inventor :**
1)TAKAGI Chikara

(57) Abstract :
A device for winding a bead ring binding thread is provided with: a feed roller (11) for feeding a bead ring (B) in the circumferential direction thereof the bead ring (B) being formed by looping a wire (W) multiple times; a gripping member (17) for gripping the leading end (Sa) of the binding thread (S); and a rotation member (13) rotating passing through the inside and outside of the bead ring (B) while capturing the binding thread (S). The device for winding the bead ring binding thread feeds the bead ring (B) in the circumferential direction and rotates the rotation member (13) in such a manner that the rotation member (13) passes through the inside and outside of the bead ring (B) and as a result the binding thread (S) is helically wound around the bead ring (B). The gripping member (17) is disposed upstream of the rotation member (13) in the feed direction (D) of the bead ring (B).

No. of Pages : 19 No. of Claims : 3

(12) PATENT APPLICATION PUBLICATION
(19) INDIA
(22) Date of filing of Application :22/12/2014
(21) Application No.2591/MUMNP/2014 A
(43) Publication Date : 24/07/2015

(54) Title of the invention : ADJUSTMENT DEVICE AIR INLET AND MOTOR VEHICLE

(51) International classification :B60K11/08,H02K7/116,F24F13/14
(31) Priority Document No :2008922
(32) Priority Date :01/06/2012
(33) Name of priority country :Netherlands
(86) International Application No :PCT/NL2013/050391
Filing Date :30/05/2013
(87) International Publication No :WO 2013/180569
(61) Patent of Addition to Application Number :NA
Filing Date :NA
(62) Divisional to Application Number :NA
Filing Date :NA

(71)**Name of Applicant :**
1)MCI (MIRROR CONTROLS INTERNATIONAL) NETHERLANDS B.V.
Address of Applicant :Pompmolenlaan 29 NL 3447 GK Woerden Netherlands
(72)**Name of Inventor :**
1)BOOM Stephen Alexander George Gustavo
2)DE VRIES Erik Alfred Simeon

(57) Abstract :
The invention relates to an adjustment device for adjusting shutoff strips of an at least partly closable air inlet of a motor compartment of a motor vehicle between at least a first position in which the shutoff strips leave the air inlet at least partly open and a second position in which the shutoff strips at least partly close the air inlet. The adjustment device comprises a drive unit situated in a housing which has a motor and a drive train with reduction stage. The drive train comprises an output shaft provided with a first coupling means facing outside the housing and a second coupling means facing outside the housing opposite with respect to the first coupling means. The coupling means are configured to cooperate with respectively a first and a second coupling element of a first and second set of shutoff strips respectively for coupling the output shaft on both sides of the housing to the respective set of shutoff strips.

No. of Pages : 20 No. of Claims : 14

(12) PATENT APPLICATION PUBLICATION
(21) Application No.2592/MUMNP/2014 A
(19) INDIA
(22) Date of filing of Application :22/12/2014
(43) Publication Date : 24/07/2015

(54) Title of the invention : BEAD RING WINDER AND SETTING MEMBER

(51) International classification :B29D30/48,B21F37/00
(31) Priority Document No :NA
(32) Priority Date :NA
(33) Name of priority country :NA
(86) International Application No :PCT/JP2012/065611
Filing Date :19/06/2012
(87) International Publication No :WO 2013/190634
(61) Patent of Addition to Application Number :NA
Filing Date :NA
(62) Divisional to Application Number :NA
Filing Date :NA

(71)**Name of Applicant :**
1)FUJI SEIKO CO. LTD.
Address of Applicant :60 Hirakata 13 chome Fukuju cho Hashima shi Gifu 5016257 Japan
2)FUJI SHOJI CO. LTD.
(72)**Name of Inventor :**
1)OGUCHI Hiroshi

(57) Abstract :
The bead ring winder winds a cord on the outer circumference of a former (12) by the rotation of a rotation shaft (11) to form a bead ring. The former (12) is provided with a fixed section (13) that is fixed to the rotation shaft (11) and with segments (14) that are connected to the fixed section (13) so as to be capable of approaching and distancing from same. The former (12) is thereby configured so that the outer circumference can be enlarged or diminished. The bead ring winder is provided with: an exchangeable setting member (21) for setting the separation distance (L) of the segments (14) with respect to the fixed section (13) according to changes in the winding diameter of the bead ring formed; and a fixing section plate (17) and fixing bolts (19) for fixing the segments (14) to the fixed section (13).

No. of Pages : 22 No. of Claims : 5

(12) PATENT APPLICATION PUBLICATION
(21) Application No.3416/MUM/2013 A
(19) INDIA
(22) Date of filing of Application :29/10/2013
(43) Publication Date : 24/07/2015

(54) Title of the invention : AN IMPROVED NOVEL PROCESS WITH PRODUCT PRODUCTION OF SOYA LECITHIN WITH PHOPHOTIDYL CHOLINE (PC) RANGE FROM 35% TO 98% AS PER APPLICATION.

(51) International classification	:C07F9/10, A61K31/66
(31) Priority Document No	:NA
(32) Priority Date	:NA
(33) Name of priority country	:NA
(86) International Application No	:NA
Filing Date	:NA
(87) International Publication No	: NA
(61) Patent of Addition to Application Number	:NA
Filing Date	:NA
(62) Divisional to Application Number	:NA
Filing Date	:NA

(71)**Name of Applicant :**
1)ASHISH OMPRAKASH MANTRI
Address of Applicant :27, MAHALAXMINAGAR, MANTHA ROAD, JALNA, MAHARASHTRA, INDIA-431203.
(72)**Name of Inventor :**
1)ASHISH O. MANTRI

(57) Abstract :
AN IMPROVED NOVEL PROCESS WITH PRODUCT PRODUCTION OF SOYA LECITHIN WITH PHOPHOTIDYL CHOLINE (PC) RANGE FROM 35% TO 98% AS PER APPLICATION .

No. of Pages : 7 No. of Claims : 2

(12) PATENT APPLICATION PUBLICATION
(19) INDIA
(22) Date of filing of Application :07/11/2014
(21) Application No.2260/MUMNP/2014 A
(43) Publication Date : 24/07/2015

(54) Title of the invention : COMPOSITION AND METHOD FOR TREATING TEXTILES

(51) International classification :C08G77/12,C08G77/14,C08G77/18
(31) Priority Document No :61/651,047
(32) Priority Date :24/05/2012
(33) Name of priority country :U.S.A.
(86) International Application No :PCT/US2013/042684
Filing Date :24/05/2013
(87) International Publication No :WO 2013/177531
(61) Patent of Addition to Application Number :NA
Filing Date :NA
(62) Divisional to Application Number :NA
Filing Date :NA

(71)**Name of Applicant :**
1)MOMENTIVE PERFORMANCE MATERIALS INC.
Address of Applicant :260 Hudson River Road Waterford NY 12188 U.S.A.
(72)**Name of Inventor :**
1)JIANG Wanchao
2)SHINGO Tabei
3)LEATHERMAN Mark
4)WANG Renwei
5)LONG Yong

(57) Abstract :
A curable composition useful for treating textiles to impart thereto upon the curing of one or more textile use enhancing characteristics includes a first macromonomer (i) which is a polysiloxane possessing two or more terminal functional groups selected from the group consisting of hydroxyl alkoxy and combinations thereof a second macromonomer (ii) which is a polysiloxane containing two or more hydrosilyl (=C SiH) groups catalyst (iii) and optionally one more additional component(s) (iv) such as surfactant(s) water etc.

No. of Pages : 27 No. of Claims : 29

(12) PATENT APPLICATION PUBLICATION
(19) INDIA
(22) Date of filing of Application :07/11/2014
(21) Application No.2261/MUMNP/2014 A
(43) Publication Date : 24/07/2015

(54) Title of the invention : AIRPORT SECURITY CHECK SYSTEM AND METHOD THEREFOR

(51) International classification :H04L9/08,B64F1/36,G06K7/10
(31) Priority Document No :61/622,213
(32) Priority Date :10/04/2012
(33) Name of priority country :U.S.A.
(86) International Application No :PCT/EP2013/057497
Filing Date :10/04/2013
(87) International Publication No :WO 2013/153118
(61) Patent of Addition to Application Number :NA
Filing Date :NA
(62) Divisional to Application Number :NA
Filing Date :NA

(71)**Name of Applicant :**
1)SITA INFORMATION NETWORKING COMPUTING IRELAND LIMITED
Address of Applicant :Building 1 Letterkenny Office Park Windyhall Letterkenny Co. Donegal Ireland
(72)**Name of Inventor :**
1)GORMLEY Michael John
2)IRMINGER Renaud

(57) Abstract :
A decryption system for decrypting user identification information encrypted on a storage device associated with a user identity document is disclosed. The system comprises: a server configured to collect user identity document data from the user and to construct a token including the user identity document data encoded in a machine readable form; a key construction unit communicatively coupled to a reader configured to read the data from the token and configured to read the data encoded on the storage device. The key construction unit uses the user identity document data read from the token to construct a key which enables the identity document reader to decrypt the user identification information stored on the storage device.

No. of Pages : 31 No. of Claims : 42

(12) PATENT APPLICATION PUBLICATION
(19) INDIA
(22) Date of filing of Application :10/11/2014
(21) Application No.2262/MUMNP/2014 A
(43) Publication Date : 24/07/2015

(54) Title of the invention : METHOD AND APPARATUS FOR DETERMINING REFERENCE PICTURE SET OF IMAGE

(51) International classification :H04N7/32
(31) Priority Document No :61/624,468
(32) Priority Date :16/04/2012
(33) Name of priority country :U.S.A.
(86) International Application No :PCT/KR2013/003181
Filing Date :16/04/2013
(87) International Publication No :WO 2013/157814
(61) Patent of Addition to Application Number :NA
Filing Date :NA
(62) Divisional to Application Number :NA
Filing Date :NA

(71)**Name of Applicant :**
1)SAMSUNG ELECTRONICS CO. LTD.
Address of Applicant :129 Samsung ro Yeongtong gu Suwon si Gyeonggi do 443 742 Republic of Korea
(72)**Name of Inventor :**
1)KIM Il koo
2)PARK Young o

(57) Abstract :
The present invention relates to a method for determining an RPS. The method for determining an RPS which is a set of reference pictures used for prediction decoding a current picture includes: determining whether to determine the RPS on the basis of a delta RPS which is the difference value between the POC value of a reference picture belonging to a reference RPS (which is one of the pre defined RPSs and capable of being referenced to determine the RPS) and the POC value of a reference picture belonging to the RPS; and determining the RPS on the basis of the determined result.

No. of Pages : 38 No. of Claims : 15

(12) PATENT APPLICATION PUBLICATION
(21) Application No.3471/MUM/2013 A
(19) INDIA
(22) Date of filing of Application :31/10/2013
(43) Publication Date : 24/07/2015

(54) Title of the invention : LOW COST TRACTOR MOUNTED COTTON PICKER WITH GROUND SPEED SYNCHRONIZED ROW UNIT

(51) International classification	:B05B3/00, A01D46/08
(31) Priority Document No	:NA
(32) Priority Date	:NA
(33) Name of priority country	:NA
(86) International Application No	:NA
Filing Date	:NA
(87) International Publication No	: NA
(61) Patent of Addition to Application Number	:NA
Filing Date	:NA
(62) Divisional to Application Number	:NA
Filing Date	:NA

(71)**Name of Applicant :**
1)New Holland Fiat (India) Pvt. Ltd.
Address of Applicant :303 Central Plaza, C.S.T. Road, Kalina, Mumbai-400098, Maharashtra, India
(72)**Name of Inventor :**
1)BHUVANESWAR SINGH
2)NITIN DHANSINGH YADAV
3)R.B.ARVIND GANJOO
4)SAHIL KHURANA
5)SOURABH SRIVASTAVA

(57) Abstract :
The present invention provides a low cost tractor mounted cotton picker with ground speed synchronized row unit. In the present invention rear power take off (PTO) (501, 701, 801, and 901) operates in two operating modes i.e. a ground speed drive mode and a normal mode. In ground speed drive mode, rear PTO (501, 701, 801, and 901) speed varies as per the ground speed of the tractor and gear selected automatically from the gearbox. In the normal mode, the rear PTO (501, 701, 801 and 901) is running with constant speed and variable speed input required for row unit is achieved by changing the pulley or sprocket. The selection of the pulley or sprocket is based on the operating gear selection. Fig. 7

No. of Pages : 26 No. of Claims : 30

(12) PATENT APPLICATION PUBLICATION
(21) Application No.2549/MUMNP/2014 A
(19) INDIA
(22) Date of filing of Application :16/12/2014
(43) Publication Date : 24/07/2015

(54) Title of the invention : HIGH SOLIDS AQUEOUS MINERAL AND/OR FILLER AND/OR PIGMENT SUSPENSION IN ACIDIC PH ENVIRONMENT

(51) International classification :C09C1/02,D21H17/00
(31) Priority Document No :12174196.1
(32) Priority Date :28/06/2012
(33) Name of priority country :EPO
(86) International Application No :PCT/EP2013/061800
Filing Date :07/06/2013
(87) International Publication No :WO 2014/001063
(61) Patent of Addition to Application Number :NA
Filing Date :NA
(62) Divisional to Application Number :NA
Filing Date :NA

(71)**Name of Applicant :**
1)OMYA INTERNATIONAL AG
Address of Applicant :Baslerstrasse 42 CH 4665 Oftringen Switzerland Switzerland
(72)**Name of Inventor :**
1)BURI Matthias
2)RENTSCH Samuel
3)GANE Patrick A. C.

(57) Abstract :
The present invention relates to high solids aqueous mineral and/or filler and/or pigment suspensions in acidic pH environment to a method for producing such high solids aqueous mineral and/or filler and/or pigment suspension to the use of the high solids aqueous mineral and/or filler and/or pigment suspension in paper making paper coating plastic agricultural and/or paint applications and as filler in paper and to a coating color formulation comprising the high solids aqueous mineral and/or filler and/or pigment suspension.

No. of Pages : 63 No. of Claims : 30

(12) PATENT APPLICATION PUBLICATION
(19) INDIA
(22) Date of filing of Application :16/12/2014
(21) Application No.2550/MUMNP/2014 A
(43) Publication Date : 24/07/2015

(54) Title of the invention : PRODUCTION OF ENZYMES FOR LIGNO CELLULOSIC BIOMASS

(51) International classification :C12P21/00
(31) Priority Document No :TO2012A000545
(32) Priority Date :21/06/2012
(33) Name of priority country :Italy
(86) International Application No :PCT/EP2013/062936
Filing Date :20/06/2013
(87) International Publication No :WO 2013/190064
(61) Patent of Addition to Application Number :NA
Filing Date :NA
(62) Divisional to Application Number :NA
Filing Date :NA

(71)**Name of Applicant :**
1)BIOCHEMTEX S.P.A.
Address of Applicant :Strada Ribrocca 11 I 15057 TORTONA (Alessandria) Italy
(72)**Name of Inventor :**
1)PARAVISI Stefano
2)VOLPATI Laura
3)GIORCELLI Chiara
4)RACCAGNI Elisa
5)OTTONELLO Piero
6)CHERCHI Francesco

(57) Abstract :
A process produces at least a first enzyme from a host cell wherein the first enzyme is capable of hydrolyzing a first pre treated ligno cellulosic biomass. The process comprises the step of cultivating the host cell to produce at least the first enzyme for a cultivation time wherein the cultivation of the host cell occurs in a sugar depleted cultivation environment comprising the host cell water and a solid composition comprising a complex sugar of the solid composition and a lignin of the solid composition. In such a process the solid composition is obtained from a second pre treated ligno cellulosic biomass comprising a complex sugar of the second pre treated ligno cellulosic biomass and a lignin of the second pre treated ligno cellulosic biomass; and the ratio of the total amount of the complex sugars of the solid composition to the total amount of the lignin of the solid composition is greater than zero and less than the ratio of the total amount of the complex sugars of the second pre treated ligno cellulosic biomass to the total amount of the lignin of the second pre treated ligno cellulosic biomass.

No. of Pages : 60 No. of Claims : 19

(12) PATENT APPLICATION PUBLICATION
(21) Application No.3555/MUM/2013 A
(19) INDIA
(22) Date of filing of Application :12/11/2013
(43) Publication Date : 24/07/2015

(54) Title of the invention : A DOOR LATCH & LOCKING MECHANISM FOR A VEHICLE

(51) International classification	:E05B65/32, E05B65/20
(31) Priority Document No	:NA
(32) Priority Date	:NA
(33) Name of priority country	:NA
(86) International Application No	:NA
Filing Date	:NA
(87) International Publication No	: NA
(61) Patent of Addition to Application Number	:NA
Filing Date	:NA
(62) Divisional to Application Number	:NA
Filing Date	:NA

(71)**Name of Applicant :**
1)BAJAJ AUTO LIMITED
Address of Applicant :AKURDI, PUNE - 411035, STATE OF MAHARASHTRA, INDIA.
(72)**Name of Inventor :**
1)FRIEDRICH ANDREAS TAALKO FUNK
2)NARAYAN SUBHASH KARANDIKAR

(57) Abstract :
The invention relates to door latch and lock mechanism operable with door handle having a latch element means, a door handle means and a rotatable transferring means wherein the said door handle/s is operatively connected to latch element means through motion transferring means to operate the door such that a locking arrangement controls the restriction of movement of rotatable elements of motion transferring means wherein in one position of the lock the door is in open state and in second position of the lock, the door is in closed state.

No. of Pages : 30 No. of Claims : 14

(12) PATENT APPLICATION PUBLICATION
(21) Application No.3559/MUM/2013 A
(19) INDIA
(22) Date of filing of Application :12/11/2013
(43) Publication Date : 24/07/2015

(54) Title of the invention : NOVEL FORMULATION FOR GONADOTROPINS

(51) International classification :A61K38/22
(31) Priority Document No :NA
(32) Priority Date :NA
(33) Name of priority country :NA
(86) International Application No :NA
Filing Date :NA
(87) International Publication No : NA
(61) Patent of Addition to Application Number :NA
Filing Date :NA
(62) Divisional to Application Number :NA
Filing Date :NA

(71)**Name of Applicant :**
1)CADILA HEALTHCARE LIMITED
Address of Applicant :ZYDUS TOWER, SATELLITE CROSS ROAD, AHMEDABAD - 380 015, GUJARAT, INDIA.
(72)**Name of Inventor :**
1)PATEL, CHINTAN
2)MAHAJAN, MUKESH
3)BANDYOPADHYAY, SANJAY
4)MENDIRATTA, SANJEEV KUMAR

(57) Abstract :
The present invention relates to a stable composition for gonadotropins. It provides a composition useful for stabilization of gonadotropins while preventing aggregation, dissociation, fragmentation and formation of oxidized species variants in solution for injection. Thus, it prevents instability of protein or polypeptide molecules caused due to aggregation or fragmentation or oxidation during or after formulation. Also, it provides a pharmaceutical composition of gonadotropins, which can be therapeutically used for the treatment of various indications either in single-dose form or in multi-dose form.

No. of Pages : 30 No. of Claims : 28

(12) PATENT APPLICATION PUBLICATION
(19) INDIA
(22) Date of filing of Application :17/12/2014
(21) Application No.2560/MUMNP/2014 A
(43) Publication Date : 24/07/2015

(54) Title of the invention : A METHOD TO REPORT CQI IN CONNECTED MODE DRX AND REDUCE UE WAKE UP TIME FOR 3GPP LONG TERM EVOLUTION (LTE) SYSTEMS

(51) International classification :H04L1/00
(31) Priority Document No :61/673169
(32) Priority Date :18/07/2012
(33) Name of priority country :U.S.A.
(86) International Application No :PCT/US2013/047389
Filing Date :24/06/2013
(87) International Publication No :WO 2014/014621
(61) Patent of Addition to Application Number :NA
Filing Date :NA
(62) Divisional to Application Number :NA
Filing Date :NA

(71)**Name of Applicant :**
1)QUALCOMM INCORPORATED
Address of Applicant :ATTN: International IP Administration 5775 Morehouse Drive San Diego California 92121 1714 U.S.A.
(72)**Name of Inventor :**
1)MAHMOUD Hisham A.
2)BHATTACHARJEE Supratik
3)BANISTER Brian Clarke

(57) Abstract :
A method an apparatus and a computer program product for wireless communication are provided. The apparatus determines whether a channel quality indicator (CQI) is to be reported during any one of x subframes immediately after a start of a next on duration an on duration being a duration over which a downlink control channel is monitored every discontinuous reception (DRX) cycle and x being a number of subframes used to generate a CQI report schedules a wake up time for reporting the CQI when the CQI is to be reported during any one of the x subframes immediately after the start of the next on duration and reports the CQI based on a reference subframe. The CQI may be based on a last subframe of a previous DRX cycle active time and reported at a first subframe of the next on duration.

No. of Pages : 41 No. of Claims : 24

(12) PATENT APPLICATION PUBLICATION
(19) INDIA
(22) Date of filing of Application :17/12/2014
(21) Application No.2562/MUMNP/2014 A
(43) Publication Date : 24/07/2015

(54) Title of the invention : BIFLUORODIOXALANE AMINO BENZIMIDAZOLE KINASE INHIBITORS FOR THE TREATMENT OF CANCER AUTOIMMUNEINFLAMMATION AND CNS DISORDERS

(51) International classification :C07D491/02,A61K31/4188,A61K35/00
(31) Priority Document No :61/664936
(32) Priority Date :27/06/2012
(33) Name of priority country :U.S.A.
(86) International Application No :PCT/EP2013/063537
Filing Date :27/06/2013
(87) International Publication No :WO 2014/001464
(61) Patent of Addition to Application Number :NA
Filing Date :NA
(62) Divisional to Application Number :NA
Filing Date :NA

(71)**Name of Applicant :**
1)4SC DISCOVERY GMBH
Address of Applicant :Am Klopferspitz 19a 82152 Planegg Martinsried Germany
(72)**Name of Inventor :**
1)LEBAN Johann
2)ZAJA Mirko

(57) Abstract :
The invention relates to a compound of the general formula (I) or a physiologically functional derivative solvate or salt thereof (I) wherein A is a bond alkyl or alkoxy optionally substituted with one or more R as defined herein N(R)CO CON(R) N(R)CON(R) S SO N(R) N(R)CO CON(R) CO COO OOC S0N(R) S0 or N(R) SO wherein R is as defined herein and specifies the point of attachment to X; X is aryl cycloalkyl aralkyl heterocyclyl or heteroaryl which may be substituted with one or more R further described herein; L is a bond or N(R)CO CON(R) N(R) C=N(R) N(R) alkyI alkyl N(R) N(R)CON(R) CO S0 alkyl alkyl 0 alkyl NCO CH=CH CH=CH CONH S0N(R) N(R)S0 or heterocyclyl wherein specifies the point of attachment to X; Y is H alkyl aryl aralkyl cycloalkyl heterocyclyl or heteroaryl which may be substituted with one or more R further described herein; and R and R are further described herein; as well as their use as a medicament a pharmaceutical composition comprising them a method of treatment or prevention of a medical condition entailing the administration thereof and the use thereof in the manufacture of a medicament for the treatment or prevention of a medical condition particularly autoimmune inflammatory disorders CNS disorders sleeping disorders or proliferative diseases including cancer. The invention further relates to a specific process for the preparation of said compounds.

No. of Pages : 156 No. of Claims : 13

(12) PATENT APPLICATION PUBLICATION
(21) Application No.3599/MUM/2013 A
(19) INDIA
(22) Date of filing of Application :18/11/2013
(43) Publication Date : 24/07/2015

(54) Title of the invention : GAS LEACKAGE DETECTION SYSTEM

(51) International classification	:B60K15/00, G01M3/04
(31) Priority Document No	:NA
(32) Priority Date	:NA
(33) Name of priority country	:NA
(86) International Application No	:NA
Filing Date	:NA
(87) International Publication No	: NA
(61) Patent of Addition to Application Number	:NA
Filing Date	:NA
(62) Divisional to Application Number	:NA
Filing Date	:NA

(71)**Name of Applicant :**
1)PATEL KASHIBHAI MANGALBHAI
Address of Applicant :AT. BHOJA, POST. KHAROL, TAL. LUNAWADA, DIST. PANCHMAHAL, PIN CODE-389220, GUJARAT, INDIA.
(72)**Name of Inventor :**
1)PATEL KASHIBHAI MANGALBHAI

(57) Abstract :
In the present invention system, gas leakage detection system is cover on the gas regulator so, when gas is leakage it create pressure on such gas leakage system and switch on the alarm system which indicates about me gas leakage. In the present invention system, gas regulator is covered with vacuum tight rubber glob so, when the gas is leakage from the regulator end it creates pressure on rubber glob. The bottom part of the rubber glob is connected with the gas regulator through the magnetic strip. When the gas is leakage from the regulator, leakage gas is entered rubber glob and crate pressure to switch on the alarm system, which shows the indication of gas leakage.

No. of Pages : 7 No. of Claims : 3

(12) PATENT APPLICATION PUBLICATION
(19) INDIA
(22) Date of filing of Application :18/12/2014
(21) Application No.2565/MUMNP/2014 A
(43) Publication Date : 24/07/2015

(54) Title of the invention : ELECTRONIC SYSTEM WITH SURFACE DETECTION MECHANISM AND METHOD OF OPERATION THEREOF

(51) International classification :G06F3/00,G06F13/00
(31) Priority Document No :61/676241
(32) Priority Date :26/07/2012
(33) Name of priority country :U.S.A.
(86) International Application No :PCT/KR2013/006697
Filing Date :26/07/2013
(87) International Publication No :WO 2014/017860
(61) Patent of Addition to Application Number :NA
Filing Date :NA
(62) Divisional to Application Number :NA
Filing Date :NA

(71)**Name of Applicant :**
1)SAMSUNG ELECTRONICS CO. LTD.
Address of Applicant :129 Samsung ro Yeongtong gu Suwon si Gyeonggi do 443 742 Republic of Korea
(72)**Name of Inventor :**
1)GOEL Mayank
2)HIBINO Stacie
3)BEGOLE James

(57) Abstract :
An electronic system includes: a vibration broadcast module configured to provide a vibration; a sensor query module coupled to the vibration broadcast module with a motion sensor and a sound sensor configured to detect the vibration; and an operation module coupled to the sensor query module configured to invoke an operation based on the vibration detected.

No. of Pages : 29 No. of Claims : 15

(12) PATENT APPLICATION PUBLICATION
(19) INDIA
(22) Date of filing of Application :18/12/2014
(21) Application No.2566/MUMNP/2014 A
(43) Publication Date : 24/07/2015

(54) Title of the invention : SIGNAL RECEIVER WITH GROUP DELAY COMPENSATION

(51) International classification :G01S3/10
(31) Priority Document No :61/657650
(32) Priority Date :08/06/2012
(33) Name of priority country :U.S.A.
(86) International Application No :PCT/US2013/044534
Filing Date :06/06/2013
(87) International Publication No :WO 2013/184927
(61) Patent of Addition to Application Number :NA
Filing Date :NA
(62) Divisional to Application Number :NA
Filing Date :NA

(71)**Name of Applicant :**
1)DEERE & COMPANY
Address of Applicant :One John Deere Place Moline IL 61265, U.S.A.
(72)**Name of Inventor :**
1)KEEGAN, Richard, G.
2)KNIGHT, Jerry, E.

(57) Abstract :
A signal receiver (120) includes an antenna interface (204) for receiving signals from an antenna (202) analog signal processing circuitry (208 a 208 b 208 c) coupled to the antenna interface (204) for processing the received signals to produce filtered signals sampling circuitry (210 a 210 b 210 c) to sample the filtered signals so as to produce digitized received signals a digital compensator (212 a 212 b 212 c) to receive the digitized received signals and compensate for non uniform group delay introduced by the analog signal processing circuitry (208 a 208 b 208 c) to produce compensated digitized received signals and a digital processor (214) to process the compensated digitized received signals so as to produce a result.

No. of Pages : 47 No. of Claims : 20

(12) PATENT APPLICATION PUBLICATION
(19) INDIA
(22) Date of filing of Application :19/11/2013
(21) Application No.3615/MUM/2013 A
(43) Publication Date : 24/07/2015

(54) Title of the invention : A ROLLER DRIVE UNIT

(51) International classification	:B65G13/06, B65G13/071
(31) Priority Document No	:NA
(32) Priority Date	:NA
(33) Name of priority country	:NA
(86) International Application No	:NA
Filing Date	:NA
(87) International Publication No	: NA
(61) Patent of Addition to Application Number	:NA
Filing Date	:NA
(62) Divisional to Application Number	:NA
Filing Date	:NA

(71)**Name of Applicant :**
1)HEMANT GANESH KELKAR
Address of Applicant :570/571, SHANIWAR PETH, NEAR KESARI OFFICE, PUNE CITY, PIN:-411030, MAHARASHTRA STATE, INDIA
(72)**Name of Inventor :**
1)HEMANT GANESH KELKAR

(57) Abstract :
A ROLLER DRIVE UNIT This invention is a roller Drive Unit for obtaining high speed reduction ratios. It contains a fixed toothed wheel, generally having internal teeth, no. of rotary/wobbling toothed wheels, generally having external teeth, a roller assembly comprising a plurality of guided identical rollers touching each other; and a cam integral with the input shaft. The roller assembly is simultaneously in contact with the internal and external teeth at different zones. When the input shaft rotates, the cam shifts the roller assembly, and hence the zones of contact are shifted. If Zl = No. of Internal teeth Z2 = No. of Rollers Z3 = No. of External teeth (Generally Z1>Z2>Z3) And when the internally toothed wheel is the fixed wheel, then Speed Reduction Ratio = - (Z3)/(Z1-Z3) [The input & output shaft rotates in opposite direction]

No. of Pages : 42 No. of Claims : 23

(12) PATENT APPLICATION PUBLICATION
(21) Application No.3617/MUM/2013 A
(19) INDIA
(22) Date of filing of Application :19/11/2013
(43) Publication Date : 24/07/2015

(54) Title of the invention : A RATCHET AND PAWL BASED DRIVE MECHANISM FOR SPRING LOADED CIRCUIT BREAKERS.

(51) International classification	:H01H33/40, H01H3/30
(31) Priority Document No	:NA
(32) Priority Date	:NA
(33) Name of priority country	:NA
(86) International Application No	:NA
Filing Date	:NA
(87) International Publication No	: NA
(61) Patent of Addition to Application Number	:NA
Filing Date	:NA
(62) Divisional to Application Number	:NA
Filing Date	:NA

(71)**Name of Applicant :**
1)CROMPTON GREAVES LIMITED
Address of Applicant :CG HOUSE, DR. ANNIE BESANT ROAD, WORLI, MUMBAI - 400030, MAHARASHTRA, INDIA
(72)**Name of Inventor :**
1)TAMBE SANGRAM
2)TELI KUNAL
3)ROY DEOSHARAN

(57) Abstract :
A ratchet and pawl based drive mechanism for spring loaded circuit breakers, said mechanism comprising: at least a ratchet charging wheel adapted to be coupled with a closing spring and further adapted to provide momentum for charging and discharging of said closing spring of said spring loaded circuit breaker, characterised, in that, an operative forward / anticlockwise angular displacement of said ratchet charging wheel for a first sector causing charging of said closing spring and a further operative forward / anticlockwise angular displacement of said ratchet charging wheel for a second (remainder) sector causing discharging of said closing spring; at least a charging pawl rocker arm adapted to oscillate in an operative upward and downward manner about an operative horizontal axis, a first end of said rocker arm being coupled to said ratchet wheel, a second end of said rocker arm being coupled to a coupler link adapted to couple said rocker arm to at least an angularly displaceable gear driven by a motor; at least a first charging pawl adapted to engage with said rocker arm and further adapted to engage with said ratchet charging wheel such that tip of said first charging pawl, in a first condition, engages with said first charging pawl, tooth by tooth, aiding charging by angularly displacing said ratchet charging wheel in an operatively forward / anticlockwise direction and said engagement preventing said ratchet charging wheels operatively reverse / clockwise angular displacement, and further such that said tip, in a second condition, disengaging from any of said teeth of said ratchet charging wheel; at least a holding latch adapted to hold said ratchet charging wheel in its spring charged condition and further adapted to release said spring charged ratchet charging wheel upon receipt of a close command to said circuit breaker; at least a set of tension resetting springs adapted to be connected to one end of said first charging pawl such that it provides anticlockwise moment about hinge point of said first charging pawl; and at least a catch mechanism adapted to break and make contact between said first charging pawl and said ratchet wheel, characterised in that, said catch mechanism further comprising: at least a primary latch; at least a secondary latch; at least a catch; at least a first stopper pin corresponding to said at least a primary latch; at least a second stopper pin corresponding to said at least a secondary latch; and springs for pre-defined moments used to hold and release said catch.

No. of Pages : 39 No. of Claims : 28

(12) PATENT APPLICATION PUBLICATION
(19) INDIA
(22) Date of filing of Application :11/12/2014
(21) Application No.2517/MUMNP/2014 A
(43) Publication Date : 24/07/2015

(54) Title of the invention : DRIFT CONTROL AGENT COMPRISING POLYPROPYLENE GLYCOL AND A TRIBLOCK POLYMER

(51) International classification	:A01N37/40,A01P13/02,A01N25/30
(31) Priority Document No	:61/669170
(32) Priority Date	:09/07/2012
(33) Name of priority country	:U.S.A.
(86) International Application No	:PCT/EP2013/063641
Filing Date	:28/06/2013
(87) International Publication No	:WO 2014/009175
(61) Patent of Addition to Application Number	:NA
Filing Date	:NA
(62) Divisional to Application Number	:NA
Filing Date	:NA

(71)**Name of Applicant :**
1)BASF SE
Address of Applicant :67056 Ludwigshafen Germany
(72)**Name of Inventor :**
1)NOLTE Marc
2)SCHNABEL Gerhard
3)MARGUERRE Ann Kathrin
4)NGUYEN KIM Viet
5)BOWE Steven
6)FRIHAUF John
7)THOMAS Walter
8)STAAL Maarten

(57) Abstract :
The present invention relates to a method for preparing a tank mix which comprises the step of contacting a pesticide for mulation water and a tank mix adjuvant which comprises a polypro pylene glycol and a triblock polymer comprising at least one polyethyleneoxide moiety and at least one polypro pyleneoxide moiety; to the tank mix adjuvant; to a pesticide formulation comprising the tank mix adjuvant: to a method of controlling phytopathogenic fungi and/or undesired vegetation and/or undesired insect or mite attack and/or for regulating the growth of plants wherein the tank mix is allowed to act on the respective pests their environment or the plants to be protected from the respective pest on the soil and/or on undesired plants and/or the crop plants and/or their environment and to a use of the tank mix adjuvant or reducing the wind drift of a pesticide formulation.

No. of Pages : 31 No. of Claims : 18

(12) PATENT APPLICATION PUBLICATION
(21) Application No.3544/MUM/2013 A
(19) INDIA
(22) Date of filing of Application :11/11/2013
(43) Publication Date : 24/07/2015

(54) Title of the invention : PHARMACEUTICAL COLLOIDAL FORMULATIONS FOR INTRANASAL DELIVERY OF ZWITTERIONIC ANTICANCER DRUG METHOTREXATE

(51) International classification	:B01J13/00, B01J13/02, A61K9/127
(31) Priority Document No	:NA
(32) Priority Date	:NA
(33) Name of priority country	:NA
(86) International Application No	:NA
Filing Date	:NA
(87) International Publication No	: NA
(61) Patent of Addition to Application Number	:NA
Filing Date	:NA
(62) Divisional to Application Number	:NA
Filing Date	:NA

(71)**Name of Applicant :**
1)PATRAVALE; VANDANA BHARAT
Address of Applicant :DEPARTMENT OF PHARMACEUTICAL SCIENCES AND TECHNOLOGY, INSTITUTE OF CHEMICAL TECHNOLOGY, N.P. MARG, MATUNGA, MUMBAI 400019, MAHARASHTRA, INDIA.
(72)**Name of Inventor :**
1)PATRAVALE; VANDANA BHARAT
2)FERNANDES; CLARA BERNARD
3)AGARWAL; ANKIT ASHOKBHAI

(57) Abstract :
The present invention relates to a stable pharmaceutical colloidal formulation comprising zwitterionic drug, solubilizer, surfactant, cosurfactant, non aqueous solvent, water with or without oil. The present invention further relates to process for preparing stable pharmaceutical colloidal formulations comprising of zwitterionic active drug(s).

No. of Pages : 20 No. of Claims : 24

(12) PATENT APPLICATION PUBLICATION
(19) INDIA
(22) Date of filing of Application :16/12/2014
(21) Application No.2552/MUMNP/2014 A
(43) Publication Date : 24/07/2015

(54) Title of the invention : IMPROVED COMPLEXES AND COMPOSITIONS CONTAINING CURCUMIN

(51) International classification	:A61K36/9066,A61K31/121,A61K31/683
(31) Priority Document No	:600146
(32) Priority Date	:22/05/2012
(33) Name of priority country	:New Zealand
(86) International Application No	:PCT/NZ2013/000086
Filing Date	:22/05/2013
(87) International Publication No	:WO 2013/176555
(61) Patent of Addition to Application Number	:NA
Filing Date	:NA
(62) Divisional to Application Number	:NA
Filing Date	:NA

(71)**Name of Applicant :**
1)CAVE Harold Gordon
Address of Applicant :c/ Level 12. KPMG Centre 85 Alexandra Street Private Bag 3140 Hamilton 3204 New Zealand
(72)**Name of Inventor :**
1)CAVE Harold Gordon

(57) Abstract :
The present invention relates to a complex the complex including a phospholipid and curcumin characterised in that the phospholipid is sourced from a marine oil.

No. of Pages : 34 No. of Claims : 41

(12) PATENT APPLICATION PUBLICATION
(19) INDIA
(22) Date of filing of Application :16/12/2014
(21) Application No.2554/MUMNP/2014 A
(43) Publication Date : 24/07/2015

(54) Title of the invention : PROTEIN KINASE INHIBITORS

(51) International classification :C07D487/04
(31) Priority Document No :2782774
(32) Priority Date :06/07/2012
(33) Name of priority country :Canada
(86) International Application No :PCT/CA2013/000612
Filing Date :03/07/2013
(87) International Publication No :WO 2014/005217
(61) Patent of Addition to Application Number :NA
Filing Date :NA
(62) Divisional to Application Number :NA
Filing Date :NA

(71)**Name of Applicant :**
1)PHARMASCIENCE INC.
Address of Applicant :Suite 100 6111 Royalmount Avenue Montreal Qubec H4P 2T4 Canada
(72)**Name of Inventor :**
1)LAURENT Alain
2)ROSE Yannick

(57) Abstract :
The present invention relates to a novel family of inhibitors of protein kinase of formula 1 and process for their production and pharmaceutical compositions thereof. In particular the present invention relates to inhibitors of the members of the Tec Src and Btk protein kinase families.

No. of Pages : 77 No. of Claims : 23

(12) PATENT APPLICATION PUBLICATION
(21) Application No.3841/MUM/2013 A
(19) INDIA
(22) Date of filing of Application :09/12/2013
(43) Publication Date : 24/07/2015

(54) Title of the invention : NOVEL PROCESS FOR THE PREPARATION OF CINACALCET HYDROCHLORIDE AND THE INTERMEDIATE THEREOF

(51) International classification	:C07C211/30, C07C233/11, C07C209/50
(31) Priority Document No	:NA
(32) Priority Date	:NA
(33) Name of priority country	:NA
(86) International Application No	:NA
Filing Date	:NA
(87) International Publication No	: NA
(61) Patent of Addition to Application Number	:NA
Filing Date	:NA
(62) Divisional to Application Number	:NA
Filing Date	:NA

(71)**Name of Applicant :**
1)UNICHEM LABORATORIES LIMITED
Address of Applicant :UNICHEM BHAVAN, PRABHAT ESTATE, OFF. S. V. ROAD, JOGESHWARI (W), MUMBAI - 400 102, MAHARASHTRA, INDIA.
(72)**Name of Inventor :**
1)DR. DHANANJAY G. SATHE
2)DR. ARIJIT DAS
3)DR. NILESH L. BONDE
4)MR. YOGESH S. PATIL
5)MR. ANKUSH S. KEKAN

(57) Abstract :
The present invention relates to a process for preparation of Cinacalcet hydrochloride and to the process for preparation of intermediate thereof.

No. of Pages : 20 No. of Claims : 14

(12) PATENT APPLICATION PUBLICATION
(19) INDIA
(22) Date of filing of Application :09/12/2013
(21) Application No.3847/MUM/2013 A
(43) Publication Date : 24/07/2015

(54) Title of the invention : FIXED DOSE COMBINATION COMPRISING LINAGLIPTIN AND METFORMIN HCL

(51) International classification	:A61K31/7034, A61K9/20, A61K31/155
(31) Priority Document No	:NA
(32) Priority Date	:NA
(33) Name of priority country	:NA
(86) International Application No	:NA
Filing Date	:NA
(87) International Publication No	: NA
(61) Patent of Addition to Application Number	:NA
Filing Date	:NA
(62) Divisional to Application Number	:NA
Filing Date	:NA

(71)**Name of Applicant :**
1)Intas Pharmaceuticals Ltd.
Address of Applicant :Intas Pharmaceuticals Ltd. 2nd Floor, Chinubhai Centre, Ashram Road, Ahmedabad 380009 Gujarat India
(72)**Name of Inventor :**
1)Priyank Patel
2)Mayur Patel
3)Mahendra Patel
4)Ashish Sehgal

(57) Abstract :
This present invention relates to pharmaceutical composition comprising fixed dose combination of linagliptin and metformin HCl wherein the composition is devoid of any basic amino acids. Further this invention also relates to process for the preparation of said composition & use of the said composition in treatment of certain diseases.

No. of Pages : 20 No. of Claims : 10

(12) PATENT APPLICATION PUBLICATION
(19) INDIA
(22) Date of filing of Application :17/12/2014
(21) Application No.2559/MUMNP/2014 A
(43) Publication Date : 24/07/2015

(54) Title of the invention : MULTIPLEX SUSPENSION ASSAY/ARRAY USING LIFETIME CODING

(51) International classification	:G01N33/53,G01N21/64,C09K11/77
(31) Priority Document No	:2012902652
(32) Priority Date	:22/06/2012
(33) Name of priority country	:Australia
(86) International Application No	:PCT/AU2013/000672
Filing Date	:21/06/2013
(87) International Publication No	:WO 2013/188927
(61) Patent of Addition to Application Number	:NA
Filing Date	:NA
(62) Divisional to Application Number	:NA
Filing Date	:NA

(71)**Name of Applicant :**
1)MACQUARIE UNIVERSITY
Address of Applicant :Balaclava Road North Ryde New South Wales 2109 Australia
(72)**Name of Inventor :**
1)JIN Dayong
2)LU Yiqing
3)ZHAO Jiangbo

(57) Abstract :
A system device and/or method for multiplex assays. In a particular but non limiting example there is provided a multiplex array such as a suspension array. Luminescence decay lifetimes are utilised for probes in a suspension array and coding/decoding the codes from time resolved spectra. Lifetime populations can be generated at distinct colour bands. A novel temporal technique or dimension is applied over conventional spectral and intensity combinations thereby expanding the multiplexing capacity of a suspension array. In one example form the multiplexing capacity of a suspension array can be expanded to the order of about 5. This provides a reliable high throughput and relatively inexpensive solution for multiplex assays in various areas of application such as life sciences data storage and security.

No. of Pages : 52 No. of Claims : 50

(12) PATENT APPLICATION PUBLICATION
(21) Application No.3590/MUM/2013 A
(19) INDIA
(22) Date of filing of Application :15/11/2013
(43) Publication Date : 24/07/2015

(54) Title of the invention : SYSTEM, METHOD, DEVICE AND APPLICATIONS TO CONNECT DEVICES AND PEOPLE OVER A HYBRID SOCIAL NETWORK

(51) International classification	:G06F17/30, H04L29/08
(31) Priority Document No	:NA
(32) Priority Date	:NA
(33) Name of priority country	:NA
(86) International Application No	:NA
Filing Date	:NA
(87) International Publication No	: NA
(61) Patent of Addition to Application Number	:NA
Filing Date	:NA
(62) Divisional to Application Number	:NA
Filing Date	:NA

(71)**Name of Applicant :**
1)MINIO TECHNOLOGIES PVT. LTD.
Address of Applicant :Seawoods Estate, Bldg. 22, Flat 1202, Nerul Sec. 54/56/58, Navi Mumbai - 400076, Maharashtra, INDIA,
(72)**Name of Inventor :**
1)SANDIP MAITI
2)AMIT DESHPANDE

(57) Abstract :
A system and method enabling users (500) to connect toys (400) with other users (500a) and their toys (400a) over a network, said system comprising: at least one toy (400) connected to a social network (100); said social network (100) having profiles (101, 102) of said toys (400, 400a) and said users (500, 500a) respectively; a web-server (201) having a web-services module (200) and a database (203) connected to said social network (100), said toys (400, 400a) and said users (500, 500a); an update server (800) connected to said social network (100), said toys (400, 400a) and said users (500, 500a); and a messaging server (300) connected to said social network (100), said toys (400, 400a) and said users (500, 500a).

No. of Pages : 33 No. of Claims : 19

(12) PATENT APPLICATION PUBLICATION
(19) INDIA
(22) Date of filing of Application :18/11/2013
(21) Application No.3596/MUM/2013 A
(43) Publication Date : 24/07/2015

(54) Title of the invention : AN IMPROVED PROCESS FOR MINIMISING THE FORMATION OF DEHALOGENATED BY PRODUCTS

(51) International classification	:C07C211/52, C07C209/00, C07B61/00, B0
(31) Priority Document No	:NA
(32) Priority Date	:NA
(33) Name of priority country	:NA
(86) International Application No	:NA
Filing Date	:NA
(87) International Publication No	: NA
(61) Patent of Addition to Application Number	:NA
Filing Date	:NA
(62) Divisional to Application Number	:NA
Filing Date	:NA

(71)**Name of Applicant :**
1)PIRAMAL ENTERPRISES LIMITED
Address of Applicant :PIRAMAL TOWER, GANPATRAO KADAM MARG, LOWER PAREL, MUMBAI-400 013, STATE OF MAHARASHTRA, INDIA
(72)**Name of Inventor :**
1)KADAM, SHASHIKANT
2)ARADDY, RAJSHEKAR
3)KONDRAGUNTA, VENKATESWARA
4)HULAVALE, YOGESH
5)SOMISETTI, NARENDER RAO
6)CHENNAMSETTY, SUNEEL MANOHAR BABU

(57) Abstract :
The present invention provides an improved process for preparation of organic compounds represented by Formula-Z; wherein effectively minimising the formation of dehalogenated by-products is achieved. In the process, the reduction is carried out using suitable reducing agent; more preferably Lithium Aluminium Hydride (LAH) in a solvent system, wherein at least one of the solvent is selected from halogenated solvents, which acts as co-solvent. The process of the present invention is useful for minimising of the formation of dehalogenated by-products during synthesis of various active pharmaceutical ingredients such as Paroxetine Hydrochloride, Cinacalcet, Eletriptan and Asenapine.

No. of Pages : 23 No. of Claims : 9

(12) PATENT APPLICATION PUBLICATION
(21) Application No.3597/MUM/2013 A
(19) INDIA
(22) Date of filing of Application :18/11/2013
(43) Publication Date : 24/07/2015

(54) Title of the invention : CONDUCTIVE GEOTEXTILE AND METHOD OF MANUFACTURING THE SAME

(51) International classification	:D04H5/02, D04H5/08
(31) Priority Document No	:NA
(32) Priority Date	:NA
(33) Name of priority country	:NA
(86) International Application No	:NA
Filing Date	:NA
(87) International Publication No	: NA
(61) Patent of Addition to Application Number	:NA
Filing Date	:NA
(62) Divisional to Application Number	:NA
Filing Date	:NA

(71)**Name of Applicant :**
1)INDIAN INSTITUTE OF TECHNOLOGY, BOMBAY
Address of Applicant :POWAI, MUMBAI 400076, MAHARASHTRA, INDIA
(72)**Name of Inventor :**
1)VISWANADHAM, B V S
2)GANGOPADHYAY, SURANJANA
3)GUHA, ANIRBAN

(57) Abstract :
The geotextile comprises a woven fabric (1) consisting of weft yarns (2) and warp yarns (3). The weft yarns and warp yarns are conductive composite yarns consisting of one or more non-conductive polymer filaments and one or more conductive metal wires twisted together under tension. Alternatively, the weft yarns are conductive composite yarns consisting of one or more non-conductive polymer filaments and one or more conductive metal wires twisted together under tension. A part of the warp yarns are conductive composite yarns consisting of one or more non-conductive polymer filaments and one or more conductive metal wires twisted together under tension and the remaining part of the warp yarns are made of non-conductive polymer filaments.

No. of Pages : 22 No. of Claims : 21

(12) PATENT APPLICATION PUBLICATION
(21) Application No.3618/MUM/2013 A
(19) INDIA
(22) Date of filing of Application :19/11/2013
(43) Publication Date : 24/07/2015

(54) Title of the invention : SYSTEM AND METHOD FOR ENSURING A CALL IS MADE FROM WITHIN A CALL APPLICATION

(51) International classification	:H04L12/16, H04L29/06
(31) Priority Document No	:NA
(32) Priority Date	:NA
(33) Name of priority country	:NA
(86) International Application No	:NA
Filing Date	:NA
(87) International Publication No	: NA
(61) Patent of Addition to Application Number	:NA
Filing Date	:NA
(62) Divisional to Application Number	:NA
Filing Date	:NA

(71)**Name of Applicant :**
1)Turakhia, Bhavin
Address of Applicant :Directiplex, Old Nagarads Road, near Andheri Subway Andheri (East), Mumbai 400069, INDIA Maharashtra
(72)**Name of Inventor :**
1)Turakhia, Bhavin

(57) Abstract :
In example embodiments, a system and method for ensuring that a call is made from within a call application is provided. Call details of a call initiated from a device of a user is accessed. A determination is made as to whether a notification is received from the call application on the device of the user. Based on the notification being received from the device of the user, a determination is made as to whether the notification provides an indication that the call was made from within a call application. A notice is provided to the user based on the call being made from outside the call application.

No. of Pages : 35 No. of Claims : 22

(12) PATENT APPLICATION PUBLICATION
(21) Application No.3619/MUM/2013 A
(19) INDIA
(22) Date of filing of Application :19/11/2013
(43) Publication Date : 24/07/2015

(54) Title of the invention : SYSTEM AND METHOD FOR ENSURING A CALL IS MADE FROM WITHIN A CALL APPLICATION

(51) International classification	:H04L12/16, H04L29/06
(31) Priority Document No	:NA
(32) Priority Date	:NA
(33) Name of priority country	:NA
(86) International Application No	:NA
Filing Date	:NA
(87) International Publication No	: NA
(61) Patent of Addition to Application Number	:NA
Filing Date	:NA
(62) Divisional to Application Number	:NA
Filing Date	:NA

(71)**Name of Applicant :**
1)TURAKHIA, BHAVIN
Address of Applicant :DIRECTIPLEX, OLD NAGARADS ROAD, NEAR ANDHERI SUBWAY ANDHERI (EAST), MUMBAI 400069 Maharashtra India
(72)**Name of Inventor :**
1)TURAKHIA, BHAVIN

(57) Abstract :
In example embodiments, a system and method for ensuring that a call is made from within a call application is provided. Call details of a call initiated from a device of a user is accessed. A determination is made as to whether a notification is received from the call application on the device of the user. Based on the notification being received from the device of the user, a determination is made as to whether the notification provides an indication that the call was made from within a call application. A notice is provided to the user based on the call being made from outside the call application.

No. of Pages : 35 No. of Claims : 22

(12) PATENT APPLICATION PUBLICATION
(19) INDIA
(22) Date of filing of Application :05/11/2014
(21) Application No.2230/MUMNP/2014 A
(43) Publication Date : 24/07/2015

(54) Title of the invention : INTERFERENCE MITIGATION IN ASYMMETRIC LTE DEPLOYMENT

(51) International classification :H04W72/04
(31) Priority Document No :PCT/CN2012/076346
(32) Priority Date :31/05/2012
(33) Name of priority country :China
(86) International Application No :PCT/CN2013/076198
Filing Date :24/05/2013
(87) International Publication No :WO 2013/178037
(61) Patent of Addition to Application Number :NA
Filing Date :NA
(62) Divisional to Application Number :NA
Filing Date :NA

(71)**Name of Applicant :**
1)QUALCOMM INCORPORATED
Address of Applicant :Attn: International IP Administration 5775 Morehouse Drive San Diego California 92121 1714 U.S.A.
(72)**Name of Inventor :**
1)WANG Neng
2)HOU Jilei
3)GUO Jiming
4)FENG Minghai

(57) Abstract :
Interference mitigation solutions are disclosed for interference experienced based on asymmetric uplink (UL)/downlink (DL) slot configuration. The aggressor/victim network entities are identified using either measurement or static/semi static means such that the victim network entities that may be impacted by interference from aggressor network entity transmissions are identified. Inter Cell Interference Coordination (ICIC) mechanisms are extended to negotiate and address scheduling that intelligently mitigates interference that occurs in the colliding slots.

No. of Pages : 52 No. of Claims : 52

(12) PATENT APPLICATION PUBLICATION
(19) INDIA
(22) Date of filing of Application :05/11/2014
(21) Application No.2231/MUMNP/2014 A
(43) Publication Date : 24/07/2015

(54) Title of the invention : ANTI TRANSGLUTAMINASE 2 ANTIBODIES

(51) International classification :C07K16/40
(31) Priority Document No :1209096.5
(32) Priority Date :24/05/2012
(33) Name of priority country :U.K.
(86) International Application No :PCT/GB2013/051373
Filing Date :24/05/2013
(87) International Publication No :WO 2013/175229
(61) Patent of Addition to Application Number :NA
Filing Date :NA
(62) Divisional to Application Number :NA
Filing Date :NA

(71)**Name of Applicant :**
1)MEDICAL RESEARCH COUNCIL TECHNOLOGY
Address of Applicant :7th Floor Lynton House 7 12 Tavistock Square London WC1H 9LT U.K.
(72)**Name of Inventor :**
1)JOHNSON Tim
2)WATSON Phil
3)MATTHEWS David
4)BROWN Alex

(57) Abstract :
The invention provides antibodies and antigen binding fragments thereof that selectively bind to an epitope within the core region of transglutaminase type 2 (TG2). Novel epitopes within the TG2 core are provided. The invention provides human TG2 inhibitory antibodies and uses thereof particularly in medicine for example in the treatment and/or diagnosis of conditions including Celiac disease scarring fibrosis related diseases neurodegenerative/neurological diseases and cancer.

No. of Pages : 179 No. of Claims : 34

(12) PATENT APPLICATION PUBLICATION
(19) INDIA
(22) Date of filing of Application :19/12/2014
(21) Application No.2578/MUMNP/2014 A
(43) Publication Date : 24/07/2015

(54) Title of the invention : METHOD AND APPARATUS FOR DYNAMICALLY CONFIGURING A CELL UPDATE MESSAGE

(51) International classification :H04W60/02
(31) Priority Document No :61/673875
(32) Priority Date :20/07/2012
(33) Name of priority country :U.S.A.
(86) International Application No :PCT/US2013/050846
Filing Date :17/07/2013
(87) International Publication No :WO 2014/015013
(61) Patent of Addition to Application Number :NA
Filing Date :NA
(62) Divisional to Application Number :NA
Filing Date :NA

(71)**Name of Applicant :**
1)QUALCOMM INCORPORATED
Address of Applicant :Attn: International IP Administration 5775 Morehouse Drive San Diego California 92121 U.S.A.
(72)**Name of Inventor :**
1)CHAKRAVARTHY Chetan Gopalakrishnan
2)KRISHNAMOORTHY Sathish
3)DUVVURU Madhavi
4)SHEIK Ansah Ahmed
5)HSU Liangchi
6)SHI Yongsheng

(57) Abstract :
The present disclosure presents a method and apparatus for dynamically configuring a cell update message at a user equipment (UE). For example the method may include determining that a size of the cell update message at the UE is above a threshold value after a measured results on random access channel (RACH) information element (IE) is excluded from the cell update message. Furthermore such an example method may include removing one or more IEs from the cell update message until the size of the cell update message is at or below the threshold value. As such dynamic configuration of a cell update message at a UE is achieved.

No. of Pages : 40 No. of Claims : 30

(12) PATENT APPLICATION PUBLICATION
(19) INDIA
(22) Date of filing of Application :19/12/2014
(21) Application No.2579/MUMNP/2014 A
(43) Publication Date : 24/07/2015

(54) Title of the invention : EXPANDING MATERIAL IN NONWOVEN 3 D STRUCTURE

(51) International classification :D04H1/42,D04H1/50,D04H3/005
(31) Priority Document No :13/584,360
(32) Priority Date :13/08/2012
(33) Name of priority country :U.S.A.
(86) International Application No :PCT/EP2013/066716
Filing Date :09/08/2013
(87) International Publication No :WO 2014/026926
(61) Patent of Addition to Application Number :NA
Filing Date :NA
(62) Divisional to Application Number :NA
Filing Date :NA

(71)**Name of Applicant :**
1)SIKA TECHNOLOGY AG
Address of Applicant :Zugerstrasse 50 CH 6340 Baar Switzerland
(72)**Name of Inventor :**
1)PILLARS Thomas
2)HEIDTMAN Patricia
3)HOEFFLIN Frank
4)MEDARIS Eric
5)HANLEY IV John L.

(57) Abstract :
The present application is directed at continuous filament non woven webs wherein the filaments of the web comprise an expandable thermoplastic material and mattings fabricated from said continuous filament non woven web. The web or matting can advantageously be used in sealing applications as it can be cut into the desired dimensions and inserted into a cavity. At that stage the web or matting allows for the introduction and drainage of further fluids in and from said cavity while at a later stage the extendable thermoplastic material can be activated and foamed to fill a part of or the entire cavity. The sealing prevents air water or noise from intruding into the cavity and a space behind that cavity.

No. of Pages : 19 No. of Claims : 15

(12) PATENT APPLICATION PUBLICATION
(19) INDIA
(22) Date of filing of Application :07/11/2014
(21) Application No.2257/MUMNP/2014 A
(43) Publication Date : 24/07/2015

(54) Title of the invention : CARE ENZYME SYSTEM

(51) International classification :C11D3/386,D06M16/00
(31) Priority Document No :12167440.2
(32) Priority Date :10/05/2012
(33) Name of priority country :EPO
(86) International Application No :PCT/EP2013/059527
Filing Date :07/05/2013
(87) International Publication No :WO 2013/167613
(61) Patent of Addition to Application Number :NA
Filing Date :NA
(62) Divisional to Application Number :NA
Filing Date :NA

(71)**Name of Applicant :**
1)UNILEVER PLC
Address of Applicant :a company registered in England and Wales under company no. 41424 of Unilever House 100 Victoria Embankment London Greater London EC4Y 0DY U.K.
(72)**Name of Inventor :**
1)LILLEY Richard Elliot
2)PARRY Neil James

(57) Abstract :
A low temperature active enzymatic fabric care composition comprising the combination of one or more primary care enzymes and one or more auxiliary care enzymes.

No. of Pages : 18 No. of Claims : 11

(12) PATENT APPLICATION PUBLICATION
(19) INDIA
(22) Date of filing of Application :07/11/2014

(21) Application No.2258/MUMNP/2014 A
(43) Publication Date : 24/07/2015

(54) Title of the invention : GENERATING VIDEO DATA WITH A SOUNDTRACK

(51) International classification	:H04N21/2368,H04N21/84,H04N9/806
(31) Priority Document No	:1206779.9
(32) Priority Date	:18/04/2012
(33) Name of priority country	:U.K.
(86) International Application No	:PCT/GB2013/050740
Filing Date	:21/03/2013
(87) International Publication No	:WO 2013/156751
(61) Patent of Addition to Application Number	:NA
Filing Date	:NA
(62) Divisional to Application Number	:NA
Filing Date	:NA

(71)**Name of Applicant :**
1)LIFE ON SHOW LIMITED
Address of Applicant :Priory House 13 Priory Crescent Langstone Newport NP18 2JF U.K.
(72)**Name of Inventor :**
1)PRICE Adam James

(57) Abstract :
A method of generating video data with a soundtrack (114) the method including: receiving (204) video data (112) relating to a product or service; obtaining (208 212) descriptive data relating to the product or service; generating (214 216) audio data based on the descriptive data; adding (218) the audio data as a soundtrack to at least part of the video data and storing (220) and/or playing the video data with the added soundtrack. The invention also includes a system configured to use the method and a related computer program element.

No. of Pages : 15 No. of Claims : 12

(12) PATENT APPLICATION PUBLICATION
(19) INDIA
(22) Date of filing of Application :07/11/2014
(21) Application No.2259/MUMNP/2014 A
(43) Publication Date : 24/07/2015

(54) Title of the invention : CATALYST FOR PURIFYING EXHAUST GAS

(51) International classification :B01J23/68,B01D53/94,F01N3/023
(31) Priority Document No :2012-089141
(32) Priority Date :10/04/2012
(33) Name of priority country :Japan
(86) International Application No :PCT/JP2013/057475
Filing Date :15/03/2013
(87) International Publication No :WO 2013/153915
(61) Patent of Addition to Application Number :NA
Filing Date :NA
(62) Divisional to Application Number :NA
Filing Date :NA

(71)**Name of Applicant :**
1)MITSUI MINING & SMELTING CO. LTD.
Address of Applicant :1 11 1 Osaki Shinagawa ku Tokyo 1418584 Japan
2)HONDA MOTOR CO. LTD.
(72)**Name of Inventor :**
1)TAKAGI Hiromitsu
2)TAKAHASHI Susumu
3)WATANABE Hiromu
4)SUGIOKA Akiko
5)ABE Akira
6)KOGAWA Takahiro
7)ISHIZAKI Keita
8)OHYA Naoki
9)NAKA Takahiro

(57) Abstract :
The present invention contains a complex oxide comprising a crystal having a DyMnO structure in which an A site contains Y and a B site contains Mn the composition ratio between the B site and the A site (B/A) being greater than 2.

No. of Pages : 26 No. of Claims : 5

(12) PATENT APPLICATION PUBLICATION
(19) INDIA
(22) Date of filing of Application :23/12/2014
(21) Application No.2597/MUMNP/2014 A
(43) Publication Date : 24/07/2015

(54) Title of the invention : CONTINUOUS SAND FILTER PLANT WITH FLUID DISTRIBUTORS

(51) International classification :B01D24/40,B01D24/16
(31) Priority Document No :1250518-6
(32) Priority Date :23/05/2012
(33) Name of priority country :Sweden
(86) International Application No :PCT/SE2013/050586
Filing Date :22/05/2013
(87) International Publication No :WO 2013/176616
(61) Patent of Addition to Application Number :NA
Filing Date :NA
(62) Divisional to Application Number :NA
Filing Date :NA

(71)**Name of Applicant :**
1)NORDIC WATER PRODUCTS AB
Address of Applicant :Sisj Kullegata 6 S 421 32 Vstra Frlunda Sweden
(72)**Name of Inventor :**
1)LARSSON Hans F

(57) Abstract :
A continuous sand filter plant comprises a plurality of filter modules at least one fluid distributor. By designing the fluid distributor with a length adapted to extend across at least two filter modules of the filter plant the costs are lower than in prior art filter plants.

No. of Pages : 20 No. of Claims : 12

(12) PATENT APPLICATION PUBLICATION
(19) INDIA
(22) Date of filing of Application :06/11/2014
(21) Application No.2250/MUMNP/2014 A
(43) Publication Date : 24/07/2015

(54) Title of the invention : NONWOVEN FABRIC FORMED FROM FIBER COATED WITH ORGANIC BINDER POLYMER COMPOUND ELECTROCHEMICAL DEVICE COMPRISING NONWOVEN FABRIC AND METHOD FOR MANUFACTURING NONWOVEN FABRIC

(51) International classification	:D04H1/4382,D04H1/541,D04H1/558
(31) Priority Document No	:10-2012-0138494
(32) Priority Date	:30/11/2012
(33) Name of priority country	:Republic of Korea
(86) International Application No	:PCT/KR2013/011037
Filing Date	:29/11/2013
(87) International Publication No	:WO 2014/084683
(61) Patent of Addition to Application Number	:NA
Filing Date	:NA
(62) Divisional to Application Number	:NA
Filing Date	:NA

(71)**Name of Applicant :**
1)LG CHEM LTD.
Address of Applicant :128 Yeoui daero Yeongdeungpo gu Seoul 150 721 Republic of Korea
(72)**Name of Inventor :**
1)RYU Bo Kyung
2)KIM Jin Woo
3)LEE Ji Eun
4)JEONG So Mi
5)KIM Jong Hun

(57) Abstract :
The present invention relates to: a nonwoven fabric in which a binder polymer is coated on a fiber by providing a nonwoven fabric forming fiber to an organic binder polymer compound solution when manufacturing nonwoven fabric; an electrochemical device using the nonwoven fabric as a material for a separation membrane; and a method for manufacturing the nonwoven fabric. Pores having a diameter of 0.001 10 µm are formed so as to ensure the movement of a lithium ion and to have mechanical properties required for a separation membrane. In addition a process for applying a separate adhesive layer when the nonwoven fabric is used as a separation membrane for an electrochemical device is unnecessary thereby simplifying a process for manufacturing a separation membrane.

No. of Pages : 16 No. of Claims : 12

(12) PATENT APPLICATION PUBLICATION
(19) INDIA
(22) Date of filing of Application :07/11/2014
(21) Application No.2251/MUMNP/2014 A
(43) Publication Date : 24/07/2015

(54) Title of the invention : PROCESS FOR PRODUCING HARDENED GRANULES FROM IRON CONTAINING PARTICLES

(51) International classification :C22B1/242,C22B7/00,C22B7/02
(31) Priority Document No :10 2012 011 240.8
(32) Priority Date :06/06/2012
(33) Name of priority country :Germany
(86) International Application No :PCT/EP2013/059749
Filing Date :10/05/2013
(87) International Publication No :WO 2013/182377
(61) Patent of Addition to Application Number :NA
Filing Date :NA
(62) Divisional to Application Number :NA
Filing Date :NA

(71)**Name of Applicant :**
1)OUTOTEC (FINLAND) OY
Address of Applicant :Rauhalanpuisto 9 FI 02230 Espoo Finland
(72)**Name of Inventor :**
1)ORTH Andreas
2)SAATCI Alpaydin
3)SCHMIDBAUER Erwin
4)KREMMER Katharina

(57) Abstract :
When producing hardened granules from iron containing particles the iron containing particles are mixed with at least one binder and water or an aqueous base to obtain a mix the mix is formed to granules and subjected to a reduction with a supplied reducing agent. To produce stable granules with the same metallic iron content mixing is effected such that first the iron containing particles are mixed with the binder and subsequently water or an aqueous base is added.

No. of Pages : 16 No. of Claims : 10

(12) PATENT APPLICATION PUBLICATION
(19) INDIA
(22) Date of filing of Application :23/12/2014
(21) Application No.2598/MUMNP/2014 A
(43) Publication Date : 24/07/2015

(54) Title of the invention : INHIBITORS OF HEPATITIS C VIRUS

(51) International classification :C07D491/18,A61P31/14,A61K31/4995
(31) Priority Document No :61/667806
(32) Priority Date :03/07/2012
(33) Name of priority country :U.S.A.
(86) International Application No :PCT/US2013/049119
Filing Date :02/07/2013
(87) International Publication No :WO 2014/008285
(61) Patent of Addition to Application Number :NA
Filing Date :NA
(62) Divisional to Application Number :NA
Filing Date :NA

(71)**Name of Applicant :**
1)GILEAD SCIENCES INC.
Address of Applicant :333 Lakeside Drive Foster City CA 94404 U.S.A.
(72)**Name of Inventor :**
1)BJORNSON Kyla
2)CANALES Eda
3)COTTELL Jeromy J.
4)KARKI Kapil Kumar
5)KATANA Ashley Anne
6)KATO Darryl
7)KOBAYASHI Tetsuya
8)LINK John O.
9)MARTINEZ Ruben
10)PHILLIPS Barton W.
11)PYUN Hyung jung
12)SANGI Michael
13)SCHRIER Adam James
14)SIEGEL Dustin
15)TAYLOR James G.
16)TRAN Chinh Viet
17)TREJO MARTIN Teresa Alejandra
18)VIVIAN Randall W.
19)YANG Zheng Yu
20)ZABLOCKI Jeff
21)ZIPFEL Sheila

(57) Abstract :
Compounds of Formula I are disclosed As well as pharmaceutically acceptable salts thereof. Methods of using said compounds and pharmaceutical compositions containing said compounds are also disclosed.

No. of Pages : 486 No. of Claims : 84

(12) PATENT APPLICATION PUBLICATION
(21) Application No.2599/MUMNP/2014 A
(19) INDIA
(22) Date of filing of Application :23/12/2014
(43) Publication Date : 24/07/2015

(54) Title of the invention : SINGLE DOSE ORAL FORMULATIONS AND METHODS FOR TREATMENT OF CATS WITH ECTOPARASITICIDAL SPINOSAD

(51) International classification :A01N43/22,A61K9/00,A61K9/20
(31) Priority Document No :61/676023
(32) Priority Date :26/07/2012
(33) Name of priority country :U.S.A.
(86) International Application No :PCT/US2013/050987
Filing Date :18/07/2013
(87) International Publication No :WO 2014/018352
(61) Patent of Addition to Application Number :NA
Filing Date :NA
(62) Divisional to Application Number :NA
Filing Date :NA

(71)**Name of Applicant :**
1)ELI LILLY AND COMPANY
Address of Applicant :Lilly Corporate Center Indianapolis Indiana 46285 U.S.A.
(72)**Name of Inventor :**
1)SNYDER Daniel Earl
2)TOTTEN Michelle Leigh
3)RIGGS Kari Lynette

(57) Abstract :
ABSTRACT This invention provides a single dose oral formulation of spinosad for the extended control of a C. infestation on a cat at a predictable dose of spinosad that is suitable for administration once every 30 days (. one month). The invention also provides methods of using the formulation of spinosad.

No. of Pages : 28 No. of Claims : 29

(12) PATENT APPLICATION PUBLICATION
(19) INDIA
(22) Date of filing of Application :10/11/2014
(21) Application No.2270/MUMNP/2014 A
(43) Publication Date : 24/07/2015

(54) Title of the invention : COMPOSITION

(51) International classification :A23L2/00,A23L2/02,A23L2/38
(31) Priority Document No :1206457.2
(32) Priority Date :12/04/2012
(33) Name of priority country :U.K.
(86) International Application No :PCT/GB2013/050924
Filing Date :10/04/2013
(87) International Publication No :WO 2013/153384
(61) Patent of Addition to Application Number :NA
Filing Date :NA
(62) Divisional to Application Number :NA
Filing Date :NA

(71)**Name of Applicant :**
1)BRITVIC SOFT DRINKS LIMITED
Address of Applicant :Breakspear Park Breakspear Way Hemel Hempstead Hemel Hempstead HP2 4TZ U.K.
(72)**Name of Inventor :**
1)SPRATT Philip

(57) Abstract :
The invention provides a fruit juice composition wherein dilution of one volume of the fruit juice composition with about 35 to about 200 volumes of liquid provides a beverage comprising about 0.2% to about 10% fruit juice. The invention further provides a packaged fruit juice composition and a method of making a beverage.

No. of Pages : 15 No. of Claims : 17

(12) PATENT APPLICATION PUBLICATION
(19) INDIA
(22) Date of filing of Application :11/11/2014
(21) Application No.2271/MUMNP/2014 A
(43) Publication Date : 24/07/2015

(54) Title of the invention : LIQUID FORMULATION

(51) International classification	:A61K47/10,A61K31/4184,A61K31/401
(31) Priority Document No	:2012902062
(32) Priority Date	:18/05/2012
(33) Name of priority country	:Australia
(86) International Application No	:PCT/AU2013/000522
Filing Date	:17/05/2013
(87) International Publication No	:WO 2013/170317
(61) Patent of Addition to Application Number	:NA
Filing Date	:NA
(62) Divisional to Application Number	:NA
Filing Date	:NA

(71)**Name of Applicant :**
1)LUODA PHARMA PTY LTD
Address of Applicant :Suite 1 304 318 The Kingsway Caringbah New South Wales 2229 Australia
(72)**Name of Inventor :**
1)BOVA Nicholas
2)PAGE Stephen
3)PIPPIA Giuseppe

(57) Abstract :
The invention relates to a liquid formulation comprising propylene glycol and an effective amount of an inodilator an angiotensin converting enzyme inhibitor or a combination of an inodilator and an angiotensin converting enzyme inhibitor and to use of the formulation for treating cardiac disease and/or hypertension.

No. of Pages : 57 No. of Claims : 43

(12) PATENT APPLICATION PUBLICATION
(21) Application No.3472/MUM/2013 A
(19) INDIA
(22) Date of filing of Application :31/10/2013
(43) Publication Date : 24/07/2015

(54) Title of the invention : INDEXING OF FILE IN A HADOOP CLUSTER

(51) International classification :G06F17/30
(31) Priority Document No :NA
(32) Priority Date :NA
(33) Name of priority country :NA
(86) International Application No :NA
Filing Date :NA
(87) International Publication No : NA
(61) Patent of Addition to Application Number :NA
Filing Date :NA
(62) Divisional to Application Number :NA
Filing Date :NA

(71)**Name of Applicant :**
1)TATA CONSULTANCY SERVICES LIMITED
Address of Applicant :Nirmal Building, 9th Floor, Nariman Point, Mumbai, Maharashtra 400021,India
(72)**Name of Inventor :**
1)VASU, Arun
2)KURUNTHALA, Jishnu

(57) Abstract :
ABSTRACT INDEXING OF FILE IN A HADOOP CLUSTER A file indexing system (102) for indexing a file to be stored onto a distributed file system (104) includes a segmentation module (122) to segment the file into a plurality of segments. The file indexing system (102) further includes an index generation module (124) to initiate indexing of the file through a plurality of nodes of a Hadoop cluster, where each of the plurality of nodes indexes one or more segments from amongst the plurality of segments to generate at least one index corresponding to the one or more segments. The file indexing system (102) further includes an index transfer module (126) to store the at least one index onto the distributed file system (104).

No. of Pages : 21 No. of Claims : 15

(12) PATENT APPLICATION PUBLICATION
(21) Application No.3474/MUM/2013 A
(19) INDIA
(22) Date of filing of Application :01/11/2013
(43) Publication Date : 24/07/2015

(54) Title of the invention : SYSTEMATIC INTRUSION DETECTION METHOD USING DATA MINING

(51) International classification :G06F12/16
(31) Priority Document No :NA
(32) Priority Date :NA
(33) Name of priority country :NA
(86) International Application No :NA
Filing Date :NA
(87) International Publication No : NA
(61) Patent of Addition to Application Number :NA
Filing Date :NA
(62) Divisional to Application Number :NA
Filing Date :NA

(71)**Name of Applicant :**
1)MRS. NEELAM SUDHIR CHANDOLIKAR
Address of Applicant :A-104, SHRI VENKATESH KSHITIJ DATA NAGAR JAMBHULWADI ROAD, AMBEGAON, KATRAJ PUNE-411046 (INDIA) Maharashtra
(72)**Name of Inventor :**
1)MRS. NEELAM SUDHIR CHANDOLIKAR
2)DR. VILAS DATTU NANDAVADEKAR

(57) Abstract :
The present invention provides a model and a method for intrusion detection. Intrusion detection method is provided for detecting unauthorized use or abnormal activities of a targeted system of a network. This method detects intrusion attacks with high accuracy, low false positive rate and high true positive rate. The invention examines various data mining techniques and constructs a model for detection of intrusion attack with high performance; therefore method increases reliability of intrusion detection alerts. As network attacks have augmented in number and severity with exponential growth of computer network. Intrusion detection system (IDS) is increasingly becoming a decisive component to secure the network. Due to huge volumes of network security audit data as well as complex and dynamic properties of intrusion behaviors, optimizing performance of IDS becomes extremely important. Method proposed in this invention is useful for optimization of performance of IDS.

No. of Pages : 18 No. of Claims : 7

(12) PATENT APPLICATION PUBLICATION
(21) Application No.3492/MUM/2013 A
(19) INDIA
(22) Date of filing of Application :04/11/2013
(43) Publication Date : 24/07/2015

(54) Title of the invention : LIQUID OR AIR LIFTING HAND PUMP

(51) International classification	:E21B43/12	(71)**Name of Applicant :**
(31) Priority Document No	:NA	**1)PATEL KASHIBHAI MANGALBHAI**
(32) Priority Date	:NA	Address of Applicant :AT. BHOJA, POST. KHAROL, TAL.
(33) Name of priority country	:NA	LUNAWADA, DIST. PANCHMAHAL, PIN CODE-389220,
(86) International Application No	:NA	GUJARAT, INDIA.
Filing Date	:NA	(72)**Name of Inventor :**
(87) International Publication No	: NA	**1)PATEL KASHIBHAI MANGALBHAI**
(61) Patent of Addition to Application Number	:NA	
Filing Date	:NA	
(62) Divisional to Application Number	:NA	
Filing Date	:NA	

(57) Abstract :
The present invention liquid and air lifting hand pump consists with force rod, piston rod, cylinder, piston, check valve, sealing O ring, Liquid or air Suction line and liquid or air storage tank.. The hand pump used to lift the liquid or air from lower level to higher level using the vacuum pressure.

No. of Pages : 10 No. of Claims : 8

(12) PATENT APPLICATION PUBLICATION
(19) INDIA
(22) Date of filing of Application :04/11/2013
(21) Application No.3493/MUM/2013 A
(43) Publication Date : 24/07/2015

(54) Title of the invention : LIQUID OR AIR LIFTING PUMP

(51) International classification :E21B43/12
(31) Priority Document No :NA
(32) Priority Date :NA
(33) Name of priority country :NA
(86) International Application No :NA
Filing Date :NA
(87) International Publication No : NA
(61) Patent of Addition to Application Number :NA
Filing Date :NA
(62) Divisional to Application Number :NA
Filing Date :NA

(71)**Name of Applicant :**
1)PATEL KASHIBHAI MANGALBHAI
Address of Applicant :AT. BHOJA, POST. KHAROL, TAL. LUNAWADA, DIST. PANCHMAHAL, PIN CODE-389220, GUJARAT, INDIA.
(72)**Name of Inventor :**
1)PATEL KASHIBHAI MANGALBHAI

(57) Abstract :
The present invention liquid and air lifting pump consists with inlet, motor, vacuum tight cover, impeller, outer air tight cover, outlet. The pump used to lift the liquid or air from lower level to higher level using the vacuum pressure.

No. of Pages : 11 No. of Claims : 3

(12) PATENT APPLICATION PUBLICATION
(21) Application No.2264/MUMNP/2014 A
(19) INDIA
(22) Date of filing of Application :10/11/2014
(43) Publication Date : 24/07/2015

(54) Title of the invention : DRAINAGE DEVICE AND METHOD FOR PRODUCING SAME

(51) International classification :A61F9/00,A61F9/007
(31) Priority Document No :NA
(32) Priority Date :NA
(33) Name of priority country :NA
(86) International Application No :PCT/RU2012/000278
Filing Date :12/04/2012
(87) International Publication No :WO 2013/154450
(61) Patent of Addition to Application Number :NA
Filing Date :NA
(62) Divisional to Application Number :NA
Filing Date :NA

(71)**Name of Applicant :**
1)ZAKHAROV Ivan Dmitrievich
Address of Applicant :ul. Saratovskaya 3/2 95 Mosow 109125 Russia
(72)**Name of Inventor :**
1)KORIGODSKIY Aleksandr Robertovich
2)ALEKSEEV Igor Borisovich
3)DOLGIY Sergey Sergeevich
4)SLONIMSKIY Aleksey Yurievich

(57) Abstract :
The invention relates to medical technology and is intended for use in ophthalmology in the surgical treatment of various types of glaucoma. According to a first aspect of the invention the drainage device for use in the surgical treatment of glaucoma is formed from a bioresorbable material in the form of a hollow profile with a closed contour in cross section ensuring the possibility of the scleral flap passing through the cavity of the device during the surgical treatment. As a result the formation of adhesions under the scleral bed along the scleral flap rib and also between the scleral flap and the conjunctiva is prevented the ease and reliability of fixing the device on the scleral flap is increased and adverse immune and inflammatory reactions are reduced. According to a second aspect the described drainage device is produced by manufacturing a blank from polymer material on a rod in the form of a hollow profile of closed cross section and subsequently cutting at least one section out of the blank in order to produce at least one drainage device. According to a third aspect of the invention in order to produce the drainage device a blank in the form of a hollow profile of closed cross section is woven from threads and at least one section is subsequently cut out of the blank in order to produce at least one drainage device. According to a fourth aspect of the invention blanks in the form of strips are produced from a flat preliminary blank made of polymer material wherein the drainage device is produced by connecting the ends of at least one blank.

No. of Pages : 27 No. of Claims : 25

(12) PATENT APPLICATION PUBLICATION
(19) INDIA
(22) Date of filing of Application :10/11/2014
(21) Application No.2265/MUMNP/2014 A
(43) Publication Date : 24/07/2015

(54) Title of the invention : PULSE SEQUENCE METHOD FOR MRI

(51) International classification :G01R33/563,G01R33/48,G01R33/561
(31) Priority Document No :1250452-8
(32) Priority Date :04/05/2012
(33) Name of priority country :Sweden
(86) International Application No :PCT/SE2013/050492
Filing Date :03/05/2013
(87) International Publication No :WO 2013/165312
(61) Patent of Addition to Application Number :NA
Filing Date :NA
(62) Divisional to Application Number :NA
Filing Date :NA

(71)**Name of Applicant :**
1)CR DEVELOPMENT AB
Address of Applicant :Box 124 S 221 00 Lund Sweden
(72)**Name of Inventor :**
1)TOPGAARD Daniel
2)LASIC Samo
3)NILSSON Markus

(57) Abstract :
The present invention describes a method for magnetic resonance (MR) and/or MR imaging comprising acquisition of signals and MR images originating from a RF and gradient sequence causing isotropic diffusion weighting of signal attenuation wherein the isotropic diffusion weighting is achieved by one time dependent dephasing vector q(t)having an orientation wherein the isotropic diffusion weighting is proportional to the trace of a diffusion tensor D and wherein the orientation of the time dependent dephasing vector q() is either varied discretely in more than three directions in total or changed continuously or changed in a combination of discretely and continuously during the gradient pulse sequence 0 = = echo time where represents the time. The method may be performed during a single shot (single MR excitation).

No. of Pages : 32 No. of Claims : 9

(12) PATENT APPLICATION PUBLICATION
(19) INDIA
(22) Date of filing of Application :06/11/2013
(21) Application No.3508/MUM/2013 A
(43) Publication Date : 24/07/2015

(54) Title of the invention : AN IMPROVED PROCESS FOR THE PREPARATION OF LINEZOLID

(51) International classification	:C07D263/20, A61K31/5377
(31) Priority Document No	:NA
(32) Priority Date	:NA
(33) Name of priority country	:NA
(86) International Application No	:NA
Filing Date	:NA
(87) International Publication No	: NA
(61) Patent of Addition to Application Number	:NA
Filing Date	:NA
(62) Divisional to Application Number	:NA
Filing Date	:NA

(71)**Name of Applicant :**
1)Unimark Remedies Ltd.
Address of Applicant :Enterprise Centre, 1st Floor, Orchid lane, Nehru Road, Vile Parle (East), Mumbai-400 099, Maharashtra India
(72)**Name of Inventor :**
1)GHORPADE, Pravin Popatrao
2)TIWARI, Karunesh Kumar
3)DAVE, Axaykumar
4)CHAUHAN, Yogendarkumar

(57) Abstract :
The present invention relates to a process for the preparation of crystalline form I of linezolid, comprising providing a solution of linezolid in a solvent, crystallizing and recovering the solid of Linezolid in crystalline form I at elevated temperature. The present invention also relates to the use of crystalline form I of linezolid prepared by the method of the present invention for preparing pharmaceutical compositions.

No. of Pages : 23 No. of Claims : 15

(12) PATENT APPLICATION PUBLICATION
(19) INDIA
(22) Date of filing of Application :15/12/2014
(21) Application No.2543/MUMNP/2014 A
(43) Publication Date : 24/07/2015

(54) Title of the invention : CONTROL METHOD AND APPARATUS FOR CONTINUOUS CASTING STEEL POURING

(51) International classification :B22D11/18
(31) Priority Document No :201210219611.6
(32) Priority Date :29/06/2012
(33) Name of priority country :China
(86) International Application No :PCT/CN2012/001660
Filing Date :10/12/2012
(87) International Publication No :WO 2014/000135
(61) Patent of Addition to Application Number :NA
Filing Date :NA
(62) Divisional to Application Number :NA
Filing Date :NA

(71)**Name of Applicant :**
1)BAOSHAN IRON & STEEL CO. LTD
Address of Applicant :885 Fujin Road Baoshan District Shanghai 201900 China
(72)**Name of Inventor :**
1)TANG Anxiang
2)SHENTU Lifeng
3)HU Jikang
4)CAO Dean
5)WANG Xingyu
6)CHEN Chen
7)YAO Jianqing
8)LU Xinghua
9)CHEN Jinsong
10)FENG Aiping
11)YU Xiaoguang

(57) Abstract :
A control method for continuous casting steel pouring. The method comprises: 1. measuring and reading a ladle casting location signal by using a ladle location sensor (14) mounted on a ladle (1) rotary table; 2. determining in a steel pouring optimization control computer (13) whether the steel pouring of the ladle starts; 3. feeding steel slag measurement data back to an inference controller by using a steel slag measurement sensor (2) mounted above a ladle slide gate nozzle (15); 4. in the inference controller comparing the read steel slag measurement data with a manually set steel slag value; if the steel slag measurement data is smaller than the manually set steel slag value returning to a previous step; and if the steel slag measurement data is greater than the manually set steel slag value outputting and feeding a cylinder control variable to a PI controller; and 5. in the PI controller comparing a fed in cylinder location signal with an actually measured cylinder location signal and performing calculation and outputting to control a cylinder driving unit (5) to push a cylinder (3) to move so as to make the opening degree of the ladle slide gate nozzle smaller. An apparatus for continuous casting steel pouring using the above control method is further provided. By means of the above method and apparatus the amount of the molten steel flow of the ladle is controlled thereby improving the yield of the molten steel and decreasing the production cost.

No. of Pages : 20 No. of Claims : 2

(12) PATENT APPLICATION PUBLICATION
(19) INDIA
(22) Date of filing of Application :16/12/2014
(21) Application No.2544/MUMNP/2014 A
(43) Publication Date : 24/07/2015

(54) Title of the invention : DOUBLE SEAT VALVE WITH A SEAT CLEANING FUNCTION

(51) International classification :F16K1/44
(31) Priority Document No :NA
(32) Priority Date :NA
(33) Name of priority country :NA
(86) International Application No :PCT/EP2012/002556
Filing Date :16/06/2012
(87) International Publication No :WO 2013/185790
(61) Patent of Addition to Application Number :NA
Filing Date :NA
(62) Divisional to Application Number :NA
Filing Date :NA

(71)**Name of Applicant :**
1)GEA TUCHENHAGEN GMBH
Address of Applicant :Am Industriepark 2 10 21514 B¼chen Germany
(72)**Name of Inventor :**
1)BURMESTER Jens
2)SDEL Matthias
3)SCHULZ Arne
4)TOLLE Bastian

(57) Abstract :
The invention relates to a double seat valve (1) which has a seat cleaning function and which ensures that the seat cleaning flow is conducted into and out of the leakage hollow space with as little turbulence as possible and reliably prevents a pressure increasing direct action upon the seat regions even in the event that the cross sectional area of the drain bore is smaller than that of the largest pipeline which can be connected to the double seat valve. This is achieved in that a region of extension of the deflection surface (4d) said region of extension facing away from the radially outer end of the deflection surface delimits the remaining region of the opening (4b) in its entirety and opens out from the second closing element (4) at an end face and radially inner end (4e) of the second closing element facing the first closing element (3).

No. of Pages : 49 No. of Claims : 25

(12) PATENT APPLICATION PUBLICATION
(19) INDIA
(22) Date of filing of Application :13/11/2013
(21) Application No.3565/MUM/2013 A
(43) Publication Date : 24/07/2015

(54) Title of the invention : AN IMPROVED PROCESS FOR THE PREPARATION OF LORCASERIN

(51) International classification :C07D223/16
(31) Priority Document No :NA
(32) Priority Date :NA
(33) Name of priority country :NA
(86) International Application No :NA
Filing Date :NA
(87) International Publication No : NA
(61) Patent of Addition to Application Number :NA
Filing Date :NA
(62) Divisional to Application Number :NA
Filing Date :NA

(71)**Name of Applicant :**
1)CADILA HEALTHCARE LIMITED
Address of Applicant :CADILA HEALTHCARE LIMITED ZYDUS TOWER, SATELLITE CROSS ROADS AHMEDABAD-380015 Gujarat India
(72)**Name of Inventor :**
1)DWIVEDI SHRI PRAKASH DHAR
2)PARIHAR JAYPRAKASH AJITSINGH
3)SHAH ALPESHKUMAR PRAVINCHANDRA
4)GAJJAR SAMIR RAMESHBHAI

(57) Abstract :
The present invention relates to stable crystalline Form I of lorcaserin hydrochloride of Formula (IA) and processes for its preparation. The invention also relates to processes for the preparation of lorcaserin and pharmaceutically acceptable salts, solvates and hydrates thereof. (IA)

No. of Pages : 30 No. of Claims : 20

(12) PATENT APPLICATION PUBLICATION
(21) Application No.1601/MUM/2013 A
(19) INDIA
(22) Date of filing of Application :03/11/2013
(43) Publication Date : 24/07/2015

(54) Title of the invention : A PROCESS FOR DRYING FRESH PRODUCE SO AS TO RETAIN NATURAL COLOUR AND ACTIVE INGREDIENTS

(51) International classification	:A23L3/22, A23L1/01
(31) Priority Document No	:NA
(32) Priority Date	:NA
(33) Name of priority country	:NA
(86) International Application No	:NA
Filing Date	:NA
(87) International Publication No	: NA
(61) Patent of Addition to Application Number	:NA
Filing Date	:NA
(62) Divisional to Application Number	:NA
Filing Date	:NA

(71)**Name of Applicant :**
1)VAIBHAV BABURAO TIDKE
Address of Applicant :C/O. ADV.B.R.TIDKE, BEHIND BAHETI HOSPITAL, BANSILAL NAGAR, AMBAJOGAI, DIST. BEED - 431517, MAHARASHTRA, INDIA.
(72)**Name of Inventor :**
1)VAIBHAV TIDKE
2)SWAPNIL KOKATE
3)BHASKAR THORAT

(57) Abstract :
A time and energy efficient process for processing and drying fresh produce, retaining natural colour or micronutritional value is claimed. The first step comprises of enlarging the surface area of the fresh produce by at least 30% by cutting, shredding, dicing, chopping as applicable. The produce is air-dried so as to retain 30-70% of its original moisture content In the second step, the surface area of the part dried produce is further enlarged by at least 50% by cutting, shredding, dicing, chopping. The semi dried produce is air dried further so as to retain 20-50% of its moisture content. In the third and final step, remaining moisture from the semi-dried produce is removed by any known means retaining 4-20% of its original moisture content.

No. of Pages : 13 No. of Claims : 5

(12) PATENT APPLICATION PUBLICATION
(21) Application No.2529/MUMNP/2014 A
(19) INDIA
(22) Date of filing of Application :12/12/2014
(43) Publication Date : 24/07/2015

(54) Title of the invention : HELIX TYPE VERTICAL AXIS TURBINE BLADES AND METHOD FOR CONTINUOUSLY MAKING SAME

(51) International classification :B21D11/08
(31) Priority Document No :61/662536
(32) Priority Date :21/06/2012
(33) Name of priority country :U.S.A.
(86) International Application No :PCT/US2013/046710
Filing Date :20/06/2013
(87) International Publication No :WO 2013/192375
(61) Patent of Addition to Application Number :NA
Filing Date :NA
(62) Divisional to Application Number :NA
Filing Date :NA

(71)**Name of Applicant :**
1)COLLINS David A.
Address of Applicant :5200 Katrine Avenue Downers Grove IL 60515 U.S.A.
(72)**Name of Inventor :**
1)COLLINS David A.

(57) Abstract :
A sheet metal blank is formed into a helical turbine blade by stretching an outer portion of the blank by creating indents and detents thereon. Then the stretched side is flattened and the stretched structure is formed into a helical shape.

No. of Pages : 21 No. of Claims : 9

(12) PATENT APPLICATION PUBLICATION
(19) INDIA
(22) Date of filing of Application :12/12/2014
(21) Application No.2530/MUMNP/2014 A
(43) Publication Date : 24/07/2015

(54) Title of the invention : A NOVEL PROCESS OF CULTIVATING BACTERIA FOR YIELD IMPROVEMENT OF CAPSULAR POLYOSES

(51) International classification :C12N1/20,C12P19/00
(31) Priority Document No :NA
(32) Priority Date :NA
(33) Name of priority country :NA
(86) International Application No :PCT/IN2011/000861
Filing Date :15/12/2011
(87) International Publication No :WO 2013/088448
(61) Patent of Addition to Application Number :NA
Filing Date :NA
(62) Divisional to Application Number :NA
Filing Date :NA

(71)**Name of Applicant :**
1)SERUM INSTITUTE OF INDIA LTD.
Address of Applicant :212/2 Off Soli Poonawalla Road Hadapsar Pune 411 028 Maharashtra India
(72)**Name of Inventor :**
1)VINAYAK Kapre Subhash
2)KUMAR Jana Swapan
3)SRIVASTAVA Amar Kumar

(57) Abstract :
The invention relates to optimization of culture conditions that utilizes different feed solutions and feeding strategies for improving capsular polyoses (CP) production.

No. of Pages : 25 No. of Claims : 17

(12) PATENT APPLICATION PUBLICATION
(19) INDIA
(22) Date of filing of Application :12/12/2014
(21) Application No.2531/MUMNP/2014 A
(43) Publication Date : 24/07/2015

(54) Title of the invention : BUILDING SYSTEM AND PANEL FOR A BUILDING SYSTEM

(51) International classification :E04B1/19,E04C2/292,E04H1/02
(31) Priority Document No :2012902851
(32) Priority Date :04/07/2012
(33) Name of priority country :Australia
(86) International Application No :PCT/AU2013/000723
Filing Date :03/07/2013
(87) International Publication No :WO 2014/005177
(61) Patent of Addition to Application Number :NA
Filing Date :NA
(62) Divisional to Application Number :NA
Filing Date :NA

(71)**Name of Applicant :**
1)NEW BUILDING SYSTEMS PTY LTD
Address of Applicant :12 Mitala Street Newport New South Wales 2106 Australia
(72)**Name of Inventor :**
1)CARLESS Glen

(57) Abstract :
A building system comprising a plurality of tubes a plurality of connection nodes comprising tubular sections for connection to the tubes wherein the tubes are arranged to connect between the connection nodes to form a frame for a building wherein at least one continuous cavity is formed through at least a portion of the nodes and tubes when the nodes and tubes are connected the building system further comprising fluid tight seals between the tubes and connection nodes to enable fluid to flow through the at least one continuous cavity.

No. of Pages : 84 No. of Claims : 40

(12) PATENT APPLICATION PUBLICATION
(19) INDIA
(22) Date of filing of Application :15/12/2014
(21) Application No.2537/MUMNP/2014 A
(43) Publication Date : 24/07/2015

(54) Title of the invention : METHOD AND SYSTEM FOR PROVIDING A SERVICE OVER A PRIVATE NETWORK

(51) International classification :G06F15/16
(31) Priority Document No :61/662237
(32) Priority Date :20/06/2012
(33) Name of priority country :U.S.A.
(86) International Application No :PCT/US2013/046640
Filing Date :19/06/2013
(87) International Publication No :WO 2013/192341
(61) Patent of Addition to Application Number :NA
Filing Date :NA
(62) Divisional to Application Number :NA
Filing Date :NA

(71)**Name of Applicant :**
1)INFOTEL BROADBAND SERVICES LTD.
Address of Applicant :5600 Tennyson Parkway Suite 120 Plano TX 75024 U.S.A.
(72)**Name of Inventor :**
1)SMITH Nathan A.
2)OOMMEN Matthew
3)SANKARANARAYNAN Pallavur A.

(57) Abstract :
A system for providing network services is provided. The system includes a device configured to interface with the network to receive a container where the container is configured to interface with an operating system of the device and a plurality of applications operating on the device. The container is further configured to interface with a network services provider of one or more network services and one or more third party service providers.

No. of Pages : 17 No. of Claims : 12

(12) PATENT APPLICATION PUBLICATION
(19) INDIA
(22) Date of filing of Application :15/12/2014
(21) Application No.2538/MUMNP/2014 A
(43) Publication Date : 24/07/2015

(54) Title of the invention : BLISTER PACK

(51) International classification :A61M15/00,B65D75/36
(31) Priority Document No :2012902839
(32) Priority Date :03/07/2012
(33) Name of priority country :Australia
(86) International Application No :PCT/AU2013/000675
Filing Date :24/06/2013
(87) International Publication No :WO 2014/005172
(61) Patent of Addition to Application Number :NA
Filing Date :NA
(62) Divisional to Application Number :NA
Filing Date :NA

(71)**Name of Applicant :**
1)ADVENT PHARMACEUTICALS PTY LTD
Address of Applicant :23 Normanby Road Notting Hill Victoria 3168 Australia
(72)**Name of Inventor :**
1)JOLLEY Nicholas

(57) Abstract :
A blister pack for containing medicament in powder form for use within an inhalation device the blister pack comprising an elongate strip of base material containing equally spaced recesses along the length of the strip each recess having walls defining a cavity and a lid hermetically sealed onto the base material to close the cavities and define pockets of medicament powder the blister strip being adapted to have each recess filled with a metered dose of medicament powder each recess being elongate having its longitudinal axis extending across the strip and having longer side walls joined by a base whereby the volume of each recess is adapted to be greater than the volume of the metered dose and each pocket of the blister strip is adapted to be opened by either pulling back the lid or puncturing the lid or the walls of the recess.

No. of Pages : 21 No. of Claims : 8

(12) PATENT APPLICATION PUBLICATION
(19) INDIA
(22) Date of filing of Application :15/12/2014
(21) Application No.2539/MUMNP/2014 A
(43) Publication Date : 24/07/2015

(54) Title of the invention : NOVEL IMINOSUGARS AND THEIR APPLICATIONS

(51) International classification	:A61K31/355,A61K31/445,A61K31/575
(31) Priority Document No	:61/656265
(32) Priority Date	:06/06/2012
(33) Name of priority country	:U.S.A.
(86) International Application No Filing Date	:PCT/US2013/044285 :05/06/2013
(87) International Publication No	:WO 2013/184780
(61) Patent of Addition to Application Number Filing Date	:NA :NA
(62) Divisional to Application Number Filing Date	:NA :NA

(71)**Name of Applicant :**
1)UNITHER VIROLOGY LLC
Address of Applicant :1733 Connecticut Avenue NW Washington District of Columbia 20009 1108 U.S.A.
2)THE CHANCELLOR MASTERS AND SCHOLARS OF THE UNIVERSITY OF OXFORD
(72)**Name of Inventor :**
1)KIAPPES J. L.
2)LAING Peter
3)DWEK Raymond
4)ZITZMANN Nicole
5)POLLOCK Stephanie

(57) Abstract :
Iminosugar compounds are described that have inbuilt delivery features by virtue of covalent incorporation of a tocopherol moiety or alternative moieties that are analogues of tocopherol or select analogues of cholesterol or its antagonist Ezitimibe; and are likely to have broad spectrum antiviral activity. The compounds differ from previous iminosugar compounds even lipophillic ones being more hydrophobic and resembling fats and oils in their partition behavior in vivo into lipid phases of lipoproteins cellular lipid droplet organelles and biological membranes. These features confer a number of unique delivery attributes in vivo favorable to the therapy of virus infections involving cells of the lymphoid system and the liver in particular but these features are also favorable in general for the treatment of virus infections of man and animals.

No. of Pages : 58 No. of Claims : 28

(12) PATENT APPLICATION PUBLICATION
(21) Application No.3490/MUM/2013 A
(19) INDIA
(22) Date of filing of Application :01/11/2013
(43) Publication Date : 24/07/2015

(54) Title of the invention : MASKING OF DUAL TONE MULTI-FREQUENCY (DTMF) TONE IN A VOICE BASED COMMUNICATION

(51) International classification	:H04L9/32, G06F11/30, G07C9/00, H04L29	(71)**Name of Applicant :** **1)TATA CONSULTANCY SERVICES LIMITED** Address of Applicant :Nirmal Building, 9th Floor, Nariman Point, Mumbai, Maharashtra 400021, India
(31) Priority Document No	:NA	(72)**Name of Inventor :**
(32) Priority Date	:NA	**1)SHUKLA, Manish**
(33) Name of priority country	:NA	**2)RADADIA, Purushotam**
(86) International Application No	:NA	**3)KARANDE, Shirish**
Filing Date	:NA	**4)KOPPARAPPU, Sunil**
(87) International Publication No	: NA	**5)LODHA, Sachin**
(61) Patent of Addition to Application Number	:NA	
Filing Date	:NA	
(62) Divisional to Application Number	:NA	
Filing Date	:NA	

(57) Abstract :
Described herein are a method and a system for masking a dual tone multi-frequency (DTMF) tone in a voice based communication over a telecommunication network. For this, an audio signal is received at a computing system (104). The audio signal is then fragmented into a plurality of audio frames. From amongst the plurality of audio frames, an audio frame is identified as a tonal frame. Thereafter, a speech signal in the tonal frame is detected. Based on the detection, a complete spectral masking or a partial spectral masking of the tonal frame is performed. According to the partial spectral masking, a DTMF tone is masked while the speech signal in the tonal frame is left unmasked.

No. of Pages : 32 No. of Claims : 18

(12) PATENT APPLICATION PUBLICATION
(19) INDIA
(22) Date of filing of Application :20/01/2014
(21) Application No.82/KOL/2014 A
(43) Publication Date : 24/07/2015

(54) Title of the invention : SYSTEM AND METHOD FOR FACILITATING AUTOMATIC HOT ROLLING OF COLD ROLLED NON-ORIENTED (CRNO) GRADE STEEL STRIPS IN A HOT ROLLING MILL.

(51) International classification :B21B 37/00
(31) Priority Document No :NA
(32) Priority Date :NA
(33) Name of priority country :NA
(86) International Application No :NA
Filing Date :NA
(87) International Publication No : NA
(61) Patent of Addition to Application Number :NA
Filing Date :NA
(62) Divisional to Application Number :NA
Filing Date :NA

(71)**Name of Applicant :**
1)STEEL AUTHORITY OF INDIA LIMITED
Address of Applicant :RESEARCH & DEVELOPMENT CENTRE FOR IRON & STEEL, DORANDA, RANCHI-834002, JHARKHAND
(72)**Name of Inventor :**
1)RATH SUSHANT
2)SENGUPTA PARTHA PRATIM
3)MARIK APURBA KUMAR
4)THAKUR SUMAN KANT
5)UJJWAL BHASKAR
6)KOTAMRAJU VENKATA RAMANA
7)MYALPAZHOOR BRAHMADATHAN SANKARAN NAMBOOTHIRIPAD

(57) Abstract :
A system and a method provided for facilitating hot strip rolling of steel including Cold Rolled Non Oriented (CNRO) grade steel in hot strip rolling mill. The present system and method is adapted to automatically and efficiently calculate draft and speed schedule for hot rolling of CNRO grade steel in the hot strip rolling mill in accordance with flow stress characteristics of the steel. The system and the method automatically and correctly determine the mill calibration parameters like roll force, torque, power, finishing stand temperature before entry of the steel to the stands and drive the rolling operation without slowing the speed and without increasing the roll gap values.

No. of Pages : 20 No. of Claims : 10

(12) PATENT APPLICATION PUBLICATION
(21) Application No.90/KOL/2014 A
(19) INDIA
(22) Date of filing of Application :22/01/2014
(43) Publication Date : 24/07/2015

(54) Title of the invention : AN IMPROVED UNIVERSAL TESTING MACHINE AND A METHOD FOR PERFORMING TENSION AND COMPRESSION TEST AT HIGH TEMPERATURE AND TO PROVIDED SIMULTANEOUSLY AN ACCURATE HOT-HARDNESS VALUES OF A TEST SPECIMEN

(51) International classification	:G01N 3/00
(31) Priority Document No	:NA
(32) Priority Date	:NA
(33) Name of priority country	:NA
(86) International Application No	:NA
Filing Date	:NA
(87) International Publication No	: NA
(61) Patent of Addition to Application Number	:NA
Filing Date	:NA
(62) Divisional to Application Number	:NA
Filing Date	:NA

(71)**Name of Applicant :**
1)BHARAT HEAVY ELECTRICALS LIMITED
Address of Applicant :REGION CAL OPERATIONS DIVISION(ROD), PLOT NO:9/1, DJ BLOCK 3RD FLOOR KARUNAMOYEE, SALTLAKE CITY, KOLKATA-700091 HAVING ITS REGISTERED OFFICE AT BHEL HOUSE SIRI FORT, NEW DELHI - 110049, INDIA.
(72)**Name of Inventor :**
1)NACHIAPPAN MANOJKUMAR
2)PERIASAMY SUNDARAMOORTHY
3)KARUPPANNAN PALANISAMY DHANADAPANI

(57) Abstract :
The invention relates to an improved universal testing machine (UTM),capable of performing tension and compression test at high temperature to provide an accurate hot-hardness values of a test specimen, the universal testing machine (UTM) (1) comprising a split furnace (8) to raise temperature of a specimen (4) under hot harness test; an indentor holder (6) attached to pull rods (2) of the UTM through a first threaded coupling (9); a specimen anvil (3) attached to bottom of said pull rods (2) via a second threaded coupling (9); a cross head assembly (10) having a cooling circuit (7) to restrict heat transfer to a load cell disposed on said cross head assembly (10); and at least one tungster carbide ball (5) attached to said pull rods (2) for Brinell hardness testing of the specimen at high temperature; The improvement is characterized in that the specimen anvil (3), and the indentor holder (6) constituting a holding device is modified to be a separately mountable device on the UTM (1) to allow conducting a plurality of testing of specimen, in that the specimen anvil (3) is made from tool steel and machined flat corresponding to the dimension of the pull rods (2), in that the stem of the indentor holder (6) is machined to a dimension to allow attachment with the pull rods (2) including an accurate alignment of the anvil (3) and the indentor holder (6), and in that means for continuous purging of nitrogen gas into the split furnace (8) to restrict oxidation of the specimen under high temperature, is provided.

No. of Pages : 14 No. of Claims : 5

(12) PATENT APPLICATION PUBLICATION
(21) Application No.98/KOL/2014 A
(19) INDIA
(22) Date of filing of Application :23/01/2014
(43) Publication Date : 24/07/2015

(54) Title of the invention : A MOUNTING ARRANGEMENT FOR FLAME SCANNERS IN HEAT RECOVERY STEAM GENERATORS (HRSGs)

(51) International classification	:F22B 1/00
(31) Priority Document No	:NA
(32) Priority Date	:NA
(33) Name of priority country	:NA
(86) International Application No	:NA
Filing Date	:NA
(87) International Publication No	: NA
(61) Patent of Addition to Application Number	:NA
Filing Date	:NA
(62) Divisional to Application Number	:NA
Filing Date	:NA

(71)**Name of Applicant :**
1)BHARAT HEAVY ELECTRICALS LIMITED
Address of Applicant :REGION CAL OPERATIONS DIVISION(ROD), PLOT NO:9/1, DJ BLOCK 3RD FLOOR, KARUNAMOYEE, SALT LAKE CITY, KOLKATA-700091 HAVING ITS REGISTERED OFFICE AT BHEL HOUSE SIRI FORT, NEW DELHI - 110049, INDIA.
(72)**Name of Inventor :**
1)THIRUMULU KALIRAMAKRISHNAN
2)VADAKANCHERRY VENKATAESWARAN SUNDAR
3)KUPPUSAMY SAVARINATHAN BALACHANDRAN
4)HAMEED MOHAMED FAROOK BASHAH
5)VENKATRAMANA RAO RAGHAVENDRAN
6)NARASIMHAN SUDARSSAN
7)PARAMBATH GOPALAKRISHNAN NIKHIL SANKAR

(57) Abstract :
The invention relates to a mounting arrangement for flame scanners in heat recovery steam generators (HRSGs), comprising a mounting arrangement for flame scanners in Heat Recovery Steam Generators (HRSGs) a guide pipe (1) having a plurality of quartz windows (30) mounted at a second end portion, a first end of the guide pipe (1) mounted on the duct wall (3) through a sleeve pipe (4) and located at a proximal distance from a first stub (32) to supply purge air to the quartz window (30); one flame scanner (5) with a second stub (6) mounted to a fixing hub (28) without direct contact with the quartz window (30),the fixing hub (28) bolted to a mounting plate (29) welded to an air header (14) feeding an ignitor (10); at least two air fans (11) connected to a sealing air piping (14) via an auto transfer damper (12) for supplying air to the piping (14), one of the at least two air fans (11) maintained in operating mode and the other in a stand-by mode; and a flexible hose (16) helps to maintain an alignment of the viewing angle of the flame scanner (5) considering the expansion of the scanner body due to heat generated within the HRSG, wherein the fixing hub(28) is maintained at ambient temperature during operation which allows the flame scanner (5) being mounted thereto at the ambient temperature, and wherein an air-gap provided between the hub (28) and the quartz window (30) acts as a barrier for heat transfer.

No. of Pages : 15 No. of Claims : 5

(12) PATENT APPLICATION PUBLICATION
(19) INDIA
(22) Date of filing of Application :25/01/2010
(21) Application No.60/KOL/2010 A
(43) Publication Date : 24/07/2015

(54) Title of the invention : AN IMPROVED METHOD OF SPHEROIDIZE ANNEALING OF YPEREUTECTOID STEEL WIRES WITH REDUCED CYCLE TIME

(51) International classification	:C21D1/04	(71)**Name of Applicant :**
(31) Priority Document No	:NA	**1)TATA STEEL LIMITED**
(32) Priority Date	:NA	Address of Applicant :RESEARCH AND DEVELOPMENT AND SCIENTIFIC SERVICES DIVISION, JAMSHEDPUR 831 001, INDIA
(33) Name of priority country	:NA	
(86) International Application No	:NA	
Filing Date	:NA	(72)**Name of Inventor :**
(87) International Publication No	: NA	**1)GAJENDRA JHA**
(61) Patent of Addition to Application Number	:NA	**2)MR. SAURABH KUNDU**
Filing Date	:NA	**3)DR. ARUNANSU**
(62) Divisional to Application Number	:NA	
Filing Date	:NA	

(57) Abstract :
The invention relates to an improved method of spheroidize annealing of hypereutectoid steel wires with reduced cycle time, comprising the steps of providing at least a standard length of hypereutectoid steel wire having about 0.6 to 0.8% of carbon in a heating furnace; directly heating the steel wire in the furnace to a temperature range of about 675°C by maintaining a heating rate substantially equal to 1.4°C/minute, the total heating time being five hours; soaking the heated steel wire within the furnace at the temperature of about 675°C for a time period of around 6.0 hours; and switching off the furnace.

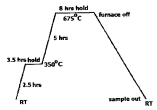

Fig.1

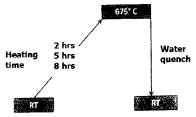

No. of Pages : 13 No. of Claims : 10

(12) PATENT APPLICATION PUBLICATION
(19) INDIA
(22) Date of filing of Application :22/06/2009
(21) Application No.787/KOL/2009 A
(43) Publication Date : 24/07/2015

(54) Title of the invention : PROTECTIVE COATING OF ZIRCON BASED MATERIAL MGO BASE TUNDISH WORKING LINING

(51) International classification :C04B35/48
(31) Priority Document No :NA
(32) Priority Date :NA
(33) Name of priority country :NA
(86) International Application No :NA
Filing Date :NA
(87) International Publication No : NA
(61) Patent of Addition to Application Number :NA
Filing Date :NA
(62) Divisional to Application Number :NA
Filing Date :NA

(71)**Name of Applicant :**
1)TATA STEEL LIMITED
Address of Applicant :RESEARCH & DEVELOPMENT DIVISION, JAMSHEDPUR 831001
(72)**Name of Inventor :**
1)ATANU RANJAN PAUL
2)SUDIP BOSE

(57) Abstract :
TITLE: PROTECTIVE COATING OF ZIRCON BASED MATERIAL ON MgO BASED TUNDISH WORKING LINING This invention relates to a protective coating composition for tundish working lining comprising Zirconia 60 to 70% by weight Silica 25 to 30% by weight Borax upto 0.75% by weight Alumina 0.75 to 1.25% by weight Titania upto 0.5% by weight Ferric Oxide upto 1% by weight Calcium Oxide 0.75 to 1.25% by weight and Magnesium Oxide upto 0.5% by weight.

No. of Pages : 6 No. of Claims : 0

(12) PATENT APPLICATION PUBLICATION
(21) Application No.185/KOL/2010 A
(19) INDIA
(22) Date of filing of Application :25/02/2010
(43) Publication Date : 24/07/2015

(54) Title of the invention : FUZZY LOGIC BASED SYSTEM AND METHOD OF MONITORING LEVEL OF LIQUID METAL AND SLAG INSIDE THE HEARTH OF A BLAST FURNACE

(51) International classification	:G05B15/02 G05F1/66
(31) Priority Document No	:NA
(32) Priority Date	:NA
(33) Name of priority country	:NA
(86) International Application No	:NA
Filing Date	:NA
(87) International Publication No	: NA
(61) Patent of Addition to Application Number	:NA
Filing Date	:NA
(62) Divisional to Application Number	:NA
Filing Date	:NA

(71)**Name of Applicant :**
1)TATA STEEL LIMITED
Address of Applicant :RESEARCH AND DEVELOPMENT DIVISION, JAMSHEDPUR 831001, INDIA
(72)**Name of Inventor :**
1)K SABARISH
2)SISTLA SATYANARAYANA
3)ABHIK ROY CHAUDHURY

(57) Abstract :
The invention relates to a fuzzy logic based system and method of monitoring level of liquid metal and slag inside the hearth of a blast furnace. The said method comprising the steps of analysing of differential flow data to decide the short and medium zone time period and to establish an idea of the current level of liquids in the hearth, then employing sensor outputs of the database to calculate the differential flows of liquid metal and slag by program residing in the server and storing the short and the medium term cumulative differential flows data when the fuzzy logic tool box fetches the data from the database and estimates the levels of liquids in the hearth through a set of prefixed rules, membership functions and inference methods wherein all the input and output variables of the fuzzy inference method is first fuzzified before they are implemented.

No. of Pages : 16 No. of Claims : 11

(12) PATENT APPLICATION PUBLICATION
(19) INDIA
(22) Date of filing of Application :12/04/2002
(21) Application No.213/CAL/2002 A
(43) Publication Date : 24/07/2015

(54) Title of the invention : FIBRE BASED DEW PRECIPITATION DETECTOR

(51) International classification :G11B 7/00
(31) Priority Document No :NA
(32) Priority Date :NA
(33) Name of priority country :NA
(86) International Application No :NA
Filing Date :NA
(87) International Publication No : NA
(61) Patent of Addition to Application Number :NA
Filing Date :NA
(62) Divisional to Application Number :NA
Filing Date :NA

(71)**Name of Applicant :**
1)SISTLA SATYANARAYAN
Address of Applicant :C/O THE TATA IRON & STEEL COMPANY LIMITED, JAMSHEDPUR Jharkhand India
2)THE TATA IRON & STEEL COMPANY LIMITED
(72)**Name of Inventor :**
1)SISTLA SATYANARAYAN
2)TRIPTI SRIVASTAVA

(57) Abstract :
According to thss invenonon theee is provided a fibr based dew precipitation detector comprising two plascic fibres (122), the first fibre (1)is for transmitting or incoming light and the second fibre (2) is for receingng or outgoing light, a ligtt from a low power laser diode (9) is focused on to the transmitting fiber (1) through a ball lens (17) and sad light protecting from the fiber (1) is broadened through a coupling lens (7) and falls onto the surface of a polished mirror (8) and reflect light from sad mirror (8) is collected in the receiving fiber (2) through sad coupling lens (7) so that the entire light flux pass through the receiving fiber (2) and the other end of said fiber (2) carries the light radiation to the detection electronics (10) comprising a photo detector (11), amplifier sections (12,13,14), a differentrator (15) and a flip-flop to set the alarm signal (16).

No. of Pages : 15 No. of Claims : 8

(12) PATENT APPLICATION PUBLICATION
(19) INDIA
(22) Date of filing of Application :18/05/2010
(21) Application No.546/KOL/2010 A
(43) Publication Date : 24/07/2015

(54) Title of the invention : MECHANISED TAIL GATE ARRANGEMENT IN TIPPER

(51) International classification	:E21B1/26	(71)**Name of Applicant :**
(31) Priority Document No	:NA	**1)TATA STEEL LIMITED**
(32) Priority Date	:NA	Address of Applicant :RESEARCH AND DEVELOPMENT AND SCIENTIFIC SERVICES DIVISION, JAMSHEDPUR 831 001, INDIA
(33) Name of priority country	:NA	
(86) International Application No	:NA	
Filing Date	:NA	(72)**Name of Inventor :**
(87) International Publication No	: NA	**1)MR. T. ROY CHOUDHURY**
(61) Patent of Addition to Application Number	:NA	**2)MR. S. K. SETH**
Filing Date	:NA	
(62) Divisional to Application Number	:NA	
Filing Date	:NA	

(57) Abstract :
The present invention relates to a mechanical tail gate arrangement in a tipper. The said arrangement consists of fixing one cross beam (2) over a sub frame (3) of a tipper, disposing a plurality of L shaped frames in the two sides of the tipper, welding the smaller ends (6) with the tail gate (1). The existing mountings at the top corner of the tail gate is removed when an additional cross member is welded in the dump body near the earlier tail gate mounting to improve strength and avoid deformation. New mounting positions are arranged over the dump body (11). A pin and bush system (7) is fixed with grease lubrication over the dump body (11) and the said system is connected with the larger side (8) of the L shaped frame (5) wherein the longer arm (8) is connected with cross beam (2) through a link and pin arrangement (9) and a turn buckle (10) is placed in between the ends of the linkage to provide minor adjustment in the linkage system when the dump body (11) goes up for dumping materials and pulls the end of the longer arm (8) which in turn opens the tail gate (1).

No. of Pages : 13 No. of Claims : 5

(12) PATENT APPLICATION PUBLICATION
(21) Application No.1831/KOL/2008 A
(19) INDIA
(22) Date of filing of Application :27/10/2008
(43) Publication Date : 24/07/2015

(54) Title of the invention : PRODUCTION OF ULTRA-FINE GRAINS IN INTERSTITIAL FREE (IF) STEEL BY MULTI-AXIAL FORGING (MAF)

(51) International classification	:C21D8/00	(71)**Name of Applicant :**
(31) Priority Document No	:NA	**1)TATA STEEL LIMITED**
(32) Priority Date	:NA	Address of Applicant :RESEARCH AND DEVELOPMENT AND SCIENTIFIC SERIVECES DIVISION, JAMSHEDPUR
(33) Name of priority country	:NA	
(86) International Application No	:NA	(72)**Name of Inventor :**
Filing Date	:NA	**1)SATYAM SUWAS**
(87) International Publication No	: NA	**2)SOMJEET BISWAS**
(61) Patent of Addition to Application Number	:NA	**3)AYAN BHOWMIK**
Filing Date	:NA	**4)SATYAVEER SINGH D.**
(62) Divisional to Application Number	:NA	**5)D. BHATTACHARJEE**
Filing Date	:NA	**6)R. K. RAY**

(57) Abstract :
The invention relates to a method to process Interstitial-free (IF) steels by adapting multi-axial forging (MAF) at room temperature to provide increased strength and ductility by producing ultrafine grain structure within the steel, the method comprising the steps of providing a multi-axial forging apparatus having a base-plate, at least two die-panels, at least one plunger with a plurality of adapters; placing a course grain IF steel billet in between the at least two lubricated die-panels with a first axis of the billet along the axis of the plunger; pressing the billet with the at least one plunger along the first axis to reduce the length of the billet to half-the-original size with a corresponding increase in the smaller sides lying along a second axis; imparting a first rotation to the billet and repeating the steps (b) and (c) along a third axis; imparting a second rotation to the billet and repeating the steps (b) and (c) such that an elongation takes place along the first axis; and repeating the cycle comprising steps (b) to (e) till such time the grain size is reduced by at least three order of magnitude.

No. of Pages : 18 No. of Claims : 0

(12) PATENT APPLICATION PUBLICATION
(19) INDIA
(22) Date of filing of Application :22/01/2014
(21) Application No.89/KOL/2014 A
(43) Publication Date : 24/07/2015

(54) Title of the invention : A METHOD OF LEAD TAKEOUT USED FOR VARIOUS CLASS AUTO TRANSFORMER

(51) International classification :H02M7/00
(31) Priority Document No :NA
(32) Priority Date :NA
(33) Name of priority country :NA
(86) International Application No :NA
Filing Date :NA
(87) International Publication No : NA
(61) Patent of Addition to Application Number :NA
Filing Date :NA
(62) Divisional to Application Number :NA
Filing Date :NA

(71)**Name of Applicant :**
1)BHARAT HEAVY ELECTRICALS LIMITED
Address of Applicant :REGIONAL OPERATIONS DIVISION(ROD), PLOT NO:9/1, DJBLOCK 3RD FLOOR, KARUNAMOYEE, SALTLAKE CITY, KOLKATA-700091, HAVING ITS REGISTERED OFFICE AT BHEL HOUSE, SIRI FORT, NEW DELHI - 110049, INDIA.
(72)**Name of Inventor :**
1)SUNIL SACHDEVA
2)ANIL KUMAR PARANJPE
3)SHUSHIL KUMAR USRETE

(57) Abstract :
Method of placing the HV/IV winding of a transformer the method comprising the step of lowering common winding(IV) and the projecting an portion, said portion of the IV coil is projected out on a horizontal axis making an angle of may be 45°, said projected portion is then placed on a static ring horizontally along 180° plane, wherein the project lead portion of IV coil is winded with a HV lead portion through a HV lead insulation, to reduce dielectric stress

No. of Pages : 10 No. of Claims : 2

(12) PATENT APPLICATION PUBLICATION
(21) Application No.97/KOL/2014 A
(19) INDIA
(22) Date of filing of Application :23/01/2014
(43) Publication Date : 24/07/2015

(54) Title of the invention : A PROCESS FOR PRODUCTION OF A NEGATIVE HYDROGEN ION AND APPARATUS THEREOF

(51) International classification	:H01J 37/00
(31) Priority Document No	:NA
(32) Priority Date	:NA
(33) Name of priority country	:NA
(86) International Application No	:NA
Filing Date	:NA
(87) International Publication No	: NA
(61) Patent of Addition to Application Number	:NA
Filing Date	:NA
(62) Divisional to Application Number	:NA
Filing Date	:NA

(71)**Name of Applicant :**
1)CENTRE OF PLASMA PHYSICS-IPR
Address of Applicant :NAZIRAKHAT, SONAPUR-782402, KAMRUP, ASSAM, INDIA;
(72)**Name of Inventor :**
1)KAKATI, BHARAT
2)KAUSHIK, SIDDHARTHA SANKAR
3)SAIKIA, BIPUL KUMAR
4)BANDYOPADHYAY, MAINAK
5)KAW, PREDHIMAN KRISHAN

(57) Abstract :
A process for production of a negative hydrogen ions and apparatus thereof using cesium coated tungsten dust in low pressure filament discharge hydrogen plasma in a continuous mode. The process is dedicated to the negative hydrogen ion production from cesium coated tungsten (W) dust using surface-plasma generation. In the process Cs coated tungsten dust particles are sprayed in the plasma volume, so negative hydrogen ions are produced in all directions inside the plasma volume. So it will help to extract them easily than the normal high current negative hydrogen ion source.The apparatus for the production of hydrogen ions comprising a magnetic cage within which hydrogen plasma is generated; cesium oven for generating cesium vapor, dust dropper for providing tungsten dust to pass through cesium vapor followed by hydrogen plasma volume within the magnetic cage and various diagnostic tools for proper monitoring of the process.

No. of Pages : 37 No. of Claims : 23

(12) PATENT APPLICATION PUBLICATION
(19) INDIA
(22) Date of filing of Application :08/02/2010

(21) Application No.114/KOL/2010 A
(43) Publication Date : 24/07/2015

(54) Title of the invention : A PROCESS TO INCREASE SURFACE HARDNESS OF LOW-CARBON STEEL SHEETS

(51) International classification	:B32B15/01 C21D9/00
(31) Priority Document No	:NA
(32) Priority Date	:NA
(33) Name of priority country	:NA
(86) International Application No	:NA
Filing Date	:NA
(87) International Publication No	: NA
(61) Patent of Addition to Application Number	:NA
Filing Date	:NA
(62) Divisional to Application Number	:NA
Filing Date	:NA

(71)**Name of Applicant :**
1)TATA STEEL LIMITED
Address of Applicant :RESEARCH AND DEVELOPMENT AND SCIENTIFIC SERVICES DIVISION, JAMSHEDPUR 831 001, INDIA
(72)**Name of Inventor :**
1)MR. SUSHIL KUMAR GIRI
2)DR. SUMITESH DAS

(57) Abstract :
The invention relates to a process to increase surface hardness of low-carbon steel sheets, the process comprising the steps of providing a low-carbon steel sheet, the steel strip having a composition, C: 0.09 (max), Mn: 0.6 (max) Si: 0.006 (max), S: 0.009 (max), P: .016 (max) A1:0.06(max), N: 35 ppm(max), with thickness in the range up to 1.2 mm including a microstructure of ferrite with hardness of 120 VHN; covering the surface of the strip at least with one layer of carbon soot and its derivatives; causing a laser beam to sweep across the steel strip in different configurations at an optimized intensity such that a width and depth of the processed zone being restricted up to 3 mm and 200 micron respectively; and allowing the molten surface of the steel sheet comprising a plurality of tracks each consisting of several spots with different degree of overlapping to solidify which increases the surface hardness and refine the microstructure, wherein the velocity of the laser beam is maintained in a range of 0.6 to 0.8 mm/sec, and wherein the frequency, current and residence period of the laser beam are respectively maintained between 2.5 to 3.0 Hz, 130- 200 amp, and 6 to 8 milliseconds.

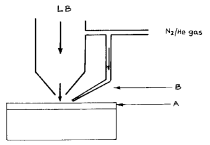

No. of Pages : 11 No. of Claims : 5

(12) PATENT APPLICATION PUBLICATION
(19) INDIA
(22) Date of filing of Application :19/10/2010
(21) Application No.1158/KOL/2010 A
(43) Publication Date : 24/07/2015

(54) Title of the invention : A SYSTEM AND A METHOD FOR SIMULTANEOUS COLLECTION OF LIQUID STEEL SAMPLE AND ACQUISITION OF TEMPARATURE DATA FROM AN LD VESSEL DURING STEEL MAKING PROCESS

(51) International classification :B22D7/00
(31) Priority Document No :NA
(32) Priority Date :NA
(33) Name of priority country :NA
(86) International Application No :NA
Filing Date :NA
(87) International Publication No : NA
(61) Patent of Addition to Application Number :NA
Filing Date :NA
(62) Divisional to Application Number :NA
Filing Date :NA

(71)**Name of Applicant :**
1)TATA STEEL LIMITED
Address of Applicant :RESEARCH AND DEVELOPMENT AND SCIENTIFIC SERVICE DIVISION, JAMSHEDPUR 831 001, INDIA
(72)**Name of Inventor :**
1)P S REDDY
2)PRASHANT KUMAR
3)MR. BK WADERA

(57) Abstract :
The invention relates to a system for simultaneous collection of liquid steel sample including acquisition of temperature data from an LD Converter during steel making process. The system comprise a dual acting probe device with a meltable protective cap enabled to collect liquid steel sample from the LD converter and simultaneously acquire temperature data inside the converter for transmission of the acquired data via a triangle piece connector for display in a displaying unit. The system also includes a common single Lance adaptable to the probe device, allowing dipping of the system inside the LD converter at different angles including withdrawal of the system from the converter subsequent to collection of sample and transmission of temperature data. The system is characterized in that the dual acting probe device comprises a thermocouple including a copper wire, and being connected to a bath temperature indicator for acquiring and transmitting temperature data; a splitted metal mould enabled to produce a cavity when closed at a first end to allow ingress of molten steel via a silica tube upon insertion of the system into the converter, the second end of the mold attached to said silica tube; a guide bush to connect the probe device with the common single lance; and a sand shell accommodating the thermocouple, metal mould, silica tube, and the triangle piece connector, the shell allowing the hot molten metal to cool down quickly when the metal introduced into the mold.

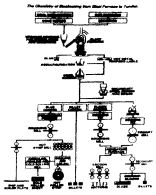

No. of Pages : 29 No. of Claims : 10

(12) PATENT APPLICATION PUBLICATION
(21) Application No.1339/KOL/2009 A
(19) INDIA
(22) Date of filing of Application :13/11/2009
(43) Publication Date : 24/07/2015

(54) Title of the invention : A PROCESS TO MEASURE AREA REDUCTION OF HOT ROLLED HIGH CARBON WIRE RODS DUE TO THE EFFECTS OF REVERS AGEING

(51) International classification :C21D8/06
(31) Priority Document No :NA
(32) Priority Date :NA
(33) Name of priority country :NA
(86) International Application No :NA
Filing Date :NA
(87) International Publication No : NA
(61) Patent of Addition to Application Number :NA
Filing Date :NA
(62) Divisional to Application Number :NA
Filing Date :NA

(71)**Name of Applicant :**
1)TATA STEEL LIMITED
Address of Applicant :RESEARCH AND DEVELOPMENT AND SCIENTIFIC SERVICES DIVISION JAMSHEDPUR 831001, INDIA
(72)**Name of Inventor :**
1)D. ROY
2)TAPAS CHANDA

(57) Abstract :
Effects of ageing time on area reduction of hot rolled high carbon steel wire rods were studied. Tensile testing and X-ray study of as rolled wire rods were carried out. Gleeble simulation and hydrogen content determination were also conducted. The results show that the reduction of area increases with ageing time at room temperature and the UTS remain unchanged which are contrary to normal ageing or strain ageing. In normal ageing, the ductility drops and the yield strength increases. In this study, the gleeble simulation and x-ray data support that the transformation from pearlite to austenite is normal and there is no evidence of retained austenite or martensitic transformation in the steel. The hydrogen content drops as the time passes. The drop is rapid in first few days and this drop increases the ductility in rolled high carbon wire rod. Hydrogen reduces the cohesive strength and the pressure generated due to transformation of atomic hydrogen to molecular state combines with tensile stress and causes cleavage or mixed type of fracture.

No. of Pages : 37 No. of Claims : 2

(12) PATENT APPLICATION PUBLICATION
(19) INDIA
(22) Date of filing of Application :05/05/2009
(21) Application No.702/KOL/2009 A
(43) Publication Date : 24/07/2015

(54) Title of the invention : AN ORGANIC-INORGANIC HYBRID COATING COMPOSITE AND A PROCESS FOR PREPARING THE SAME

(51) International classification :B01J20/04
(31) Priority Document No :NA
(32) Priority Date :NA
(33) Name of priority country :NA
(86) International Application No :NA
Filing Date :NA
(87) International Publication No : NA
(61) Patent of Addition to Application Number :NA
Filing Date :NA
(62) Divisional to Application Number :NA
Filing Date :NA

(71)**Name of Applicant :**
1)TATA STEEL LIMITED
Address of Applicant :RESEARCH AND DEVELOPMENT DIVISION, JAMSHEDPUR 831001
(72)**Name of Inventor :**
1)A.K. SINGH
2)NIKHILES BANDYOPADHYAY

(57) Abstract :
The present invention relates to the development of organic composite coating for galvanized steel material. The organic-inorganic hybrid coating is water based coating which consists of styrene acrylic resin, polyurethane resin, polyethylene wax, and colloidal silica and corrosion inhibitors and other additives. The corrosion inhibitors consisted of zinc oxide (ZnO) along with either or combination of inhibitors such as zinc phosphate, sodium phosphate, sodium phosphate dibasic dodecahydrate. This novel coating composition is the best suited for the surface treatment of the zinc coated steel known as galvanized material. The present invention relates to enhance white rust resistance of the galvanized steel by the application of organic composite coating. In addition to corrosion resistance, this organic composite coating enhance the antifinger resistance and lubricity to the coated sheet.

No. of Pages : 12 No. of Claims : 8

(12) PATENT APPLICATION PUBLICATION
(21) Application No.91/KOL/2014 A
(19) INDIA
(22) Date of filing of Application :22/01/2014
(43) Publication Date : 24/07/2015

(54) Title of the invention : 'A DEVICE AND A METHOD TO PERFORM PUNCHING/CAULKING PROCESS AROUND SUBSTANTIALLY UN-APPROACHABLE GROOVES TURBINE ACCOMMADATING WEIGHTS BALANCING THE TURBINE'

(51) International classification	:F01D 5/00
(31) Priority Document No	:NA
(32) Priority Date	:NA
(33) Name of priority country	:NA
(86) International Application No	:NA
Filing Date	:NA
(87) International Publication No	: NA
(61) Patent of Addition to Application Number	:NA
Filing Date	:NA
(62) Divisional to Application Number	:NA
Filing Date	:NA

(71)**Name of Applicant :**
1)BHARAT HEAVY ELECTRICALS LIMITED
Address of Applicant :REGION CAL OPERATIONS DIVISION(ROD), PLOT NO:9/1, DJBLOCK 3RD FLOOR, KARUNAMOYEE, SALT LAKE CITY, KOLKATA-700091 HAVING ITS REGISTERED OFFICE AT BHEL HOUSE SIRI FORT, NEW DELHI - 110049, INDIA.
(72)**Name of Inventor :**
1)NARENDER KUMAR CHOURASIA

(57) Abstract :
The invention relates to a device to perform punching/caulking process around substantially unapproachable grooves on a turbine accommodating weights balancing the turbine, comprising a hammer (1) with a point noise for plastic deformation at the edge of the grooves provided on the turbine to mount balancing weights, the hammer allowing a successful caulking operation; a plurality of Plates (2) with threaded holes to hold and support the hammer (1) to make a threaded joint, and a plurality of threaded Bolts which can move within said plates (2) to convert a rotary motion generated on the hammer (1) to linear motion through said threaded joint formed between the bolts (3) and the plate (2).

No. of Pages : 17 No. of Claims : 3

(12) PATENT APPLICATION PUBLICATION
(21) Application No.99/KOL/2014 A
(19) INDIA
(22) Date of filing of Application :23/01/2014
(43) Publication Date : 24/07/2015

(54) Title of the invention : 'A DEVICE FOR PRODUCING A LEAK TIGHT, ELECTRICALLY ISOLATIVE JOINT BETWEEN TWO CONNECTING METAL PIPES CARRYING FLUIDS AT VERY HIGH PRESSURE AND TEMPERATURE CONDITIONS PRESENT IN OPERATING BOILERS'

(51) International classification :F16J 15/00
(31) Priority Document No :NA
(32) Priority Date :NA
(33) Name of priority country :NA
(86) International Application No :NA
Filing Date :NA
(87) International Publication No : NA
(61) Patent of Addition to Application Number :NA
Filing Date :NA
(62) Divisional to Application Number :NA
Filing Date :NA

(71)**Name of Applicant :**
1)BHARAT HEAVY ELECTRICALS LIMITED
Address of Applicant :REGION CAL OPERATIONS DIVISION(ROD) PLOT NO:9/1, DJBLOCK 3RD FLOOR, KARUNAMOYEE,SALTLAKE CITY, KOLKATA-700091, HAVING ITS REGISTERED OFFICE AT BHEL HOUSE SIRI FORT, NEW DELHI - 110049, INDIA.
(72)**Name of Inventor :**
1)DIBYA JYOTI DEKA
2)RAMASAMY DHANUSKODI
3)AGORAM GUNASEKARAN
4)RAMAN KALIAPPAN
5)SHANMUGAM KALYANASUNDARAM

(57) Abstract :
The invention relates to a device for producing a leak tight electrically isolative joint between two connecting metal pipes carrying fluids at very high pressure and temperature conditions present in operating boilers, the device comprising identical flanges (10 and 13) having grooves on mating surface welded with the pipes to be connected, a gasket assembly consisting of one stainless steel disc (12) with or without ceramic coating and two stainless steel ring joint gaskets (4 and 5) placed in the grooves, two copper rings (6 and 11) placed inside the grooves, mica sheet gaskets (2 and 14) of appropriate thickness placed at the contact surfaces (top and bottom) of the ring joint gaskets (4, 5) and stainless steel disc (12), the flanges being tightened by using stainless steel studs (8) and nuts(3) including washers (9), the studs (8) and the washers (9) coated with ceramic to ensure electrical isolation between the two connecting pipes (1, 7).

No. of Pages : 11 No. of Claims : 3

(12) PATENT APPLICATION PUBLICATION
(19) INDIA
(22) Date of filing of Application :17/06/2010
(21) Application No.652/KOL/2010 A
(43) Publication Date : 24/07/2015

(54) Title of the invention : A METHOD OF MANUFACTURING AN APPARATUS FOR MEASUREMENT OF COKE REACTIVITY STRENGTH INCLUDING HOT STRENGTH OF IRON BEARING MATERIALS

(51) International classification :C10B57/04
(31) Priority Document No :NA
(32) Priority Date :NA
(33) Name of priority country :NA
(86) International Application No :NA
Filing Date :NA
(87) International Publication No : NA
(61) Patent of Addition to Application Number :NA
Filing Date :NA
(62) Divisional to Application Number :NA
Filing Date :NA

(71)**Name of Applicant :**
1)TATA STEEL LIMITED
Address of Applicant :RESEARCH AND DEVELOPMENT AND SCIENTIFIC SERVICES DIVISION JAMSHEDPUR 831001, INDIA
(72)**Name of Inventor :**
1)ANANT PRAKASH
2)DHIRENDRA PRASAD

(57) Abstract :
The invention relates to a method of manufacturing an apparatus for measurement of coke strength after reaction and/or hot strength of iron oxide bearing materials. The method comprising the steps of providing a reaction vessel for carrying out the test for measurement; separating the thermocouple in-built with the top flange cover flange of the vessel; configuring a tripod by cutting and welding at least three pieces of inconnel tube and rigidly attaching the tripod with a dummy flange, providing a single piece inconnel tube having diameter at least + 1mm over that of the inconnel pieces forming the tripod. The oversized inconnel tube having a length higher than each of said three inconnel pieces forming the tripod; attaching the oversized and longer single piece inconnel tube at the bottom of the top flange cover from where the thermocouple was separated which constitutes a thermo well with lid; providing a perforated plate at a bottom portion of the reaction vessel; placing a first plurality of alumina balls on the perforated plate and inserting a hollow pipe through the centre of the reaction vessel such that the bottom of the hollow pipe touches the first plurality of alumina balls and then second plurality of alumina balls. Then putting the sample between the hollow pipe and the wall of the reaction vessel. Withdrawal of the hollow pipe from the vessel, which leaves behind a cavity formed on the test sample; inserting the thermo well with lid and fastening the lid over the reaction vessel; and inserting the thermocouple formed in step (iii) into the thermo well; placing the reaction vessel with the apparatus into an electric furnace for testing and measurement of coke reactivity strength and/or hot strength of iron bearing materials.

No. of Pages : 22 No. of Claims : 3

(12) PATENT APPLICATION PUBLICATION
(21) Application No.2822/KOLNP/2012 A
(19) INDIA
(22) Date of filing of Application :26/09/2012
(43) Publication Date : 24/07/2015

(54) Title of the invention : IMPROVED REINFORCING BAR AND METHOD FOR MANUFACTURING THE SAME

(51) International classification :E04C5/18
(31) Priority Document No :197/KOL/2010
(32) Priority Date :02/03/2010
(33) Name of priority country :India
(86) International Application No :PCT/IB2011/000355
Filing Date :22/02/2011
(87) International Publication No :WO/2011/107848
(61) Patent of Addition to Application Number :NA
Filing Date :NA
(62) Divisional to Application Number :NA
Filing Date :NA

(71)**Name of Applicant :**
1)KAR Anil Krishna
Addressof Applicant :CJ 331 Salt lake City Kolkata - 700091 State of West Bengal
(72)**Name of Inventor :**
1)KAR Anil Krishna

(57) Abstract :
Disclosed are an improved reinforcing bar and methods for manufacturing the same. The improved reinforcing bar is made from a high strength material, and has a circular or oval or elliptical cross section and deformation of the axis in a single plane or in multiple planes. The methods for manufacturing the improved reinforcing bar include a hot working process and a cold working process. The undulating /wavy bar with axis deformation can improve the anchorage of the bar in concrete and the bond strength without comprising any surface modifications. The amplitude and pattern of axis deformation of the bar can avoid stress concentration and its ill effects.

No. of Pages : 30 No. of Claims : 16

(12) PATENT APPLICATION PUBLICATION
(19) INDIA
(22) Date of filing of Application :21/01/2014
(21) Application No.85/KOL/2014 A
(43) Publication Date : 24/07/2015

(54) Title of the invention : CONTROL SYSTEM FOR SUPERVISING PLURALITY OF SLAVE AND/OR FIELD DEVICES AND METHOD OF SELECTING THE MODE OF OPERATION OF A CONTROL SYSTEM

(51) International classification	:H04L 12/00
(31) Priority Document No	:NA
(32) Priority Date	:NA
(33) Name of priority country	:NA
(86) International Application No	:NA
Filing Date	:NA
(87) International Publication No	: NA
(61) Patent of Addition to Application Number	:NA
Filing Date	:NA
(62) Divisional to Application Number	:NA
Filing Date	:NA

(71)**Name of Applicant :**
1)SCHNEIDER ELECTRIC INDUSTRIES SAS
Address of Applicant :35, RUE JOSEPH MONIER, F-92500 RUEIL MALMAISON, FRANCE
(72)**Name of Inventor :**
1)SUDEEP GAURKAR

(57) Abstract :
The present invention provides control system (100) comprising of a central monitoring control and data processing unit (102), an input/output (I/O) module (104), a protocol converter module (106), a communication interface module (108), and a transceiver (110). The control system (100) is linked with the slave/field devices (112-1, 112-2,112-3 and 112-4) deployed in an automation environment and is configured to monitor and control the slave/field devices (112-1, 112-2,112-3 and 112-4). The control system (100) is configured to work in supervisory mode or in gateway mode or in gateway under supervisory mode depending on predefined conditions. The present invention also provides a method of selecting the mode of operation of a control system (100) operatiyely linked to the plurality of slave/field devices (112-1, 112-2, 112-3, ,112-4) deployed in an automation environment.

No. of Pages : 22 No. of Claims : 12

(12) PATENT APPLICATION PUBLICATION
(21) Application No.53/KOL/2015 A
(19) INDIA
(22) Date of filing of Application :14/01/2015
(43) Publication Date : 24/07/2015

(54) Title of the invention : SOMATOSENSORY TYPE NOTIFICATION ALERTS

(51) International classification :G01R33/28
(31) Priority Document No :61/930,776
(32) Priority Date :23/01/2014
(33) Name of priority country :U.S.A.
(86) International Application No :NA
Filing Date :NA
(87) International Publication No : NA
(61) Patent of Addition to Application Number :NA
Filing Date :NA
(62) Divisional to Application Number :NA
Filing Date :NA

(71)**Name of Applicant :**
1)GOOGLE INC.
Address of Applicant :1600, AMPHITHEATRE PARKWAY, MOUNTAIN VIEW, CALIFORNIA 94043 United States of America.
(72)**Name of Inventor :**
1)FAABORG, ALEXANDER
2)COHEN, GABRIEL AARON

(57) Abstract :
Acomputing device is described that canreceive contextual information related to a user associated with the computing device. The contextual information may relate to at least one of a physiological condition of the user at a current time or a type of activity associated with the user at the current time. The computing device can select, based at least in part on the contextual information, a type of alert to output as an indication of notification data. The type of alert may include at least one of an electric stimulus type alert, a shape- memory alloy type alert, and a vibration type alert. Responsive to selecting the type of alert, the computing device can output an alert based on the notification data, the alert being of the selected type of alert.

No. of Pages : 68 No. of Claims : 19

(12) PATENT APPLICATION PUBLICATION
(19) INDIA
(22) Date of filing of Application :30/03/2011
(21) Application No.424/KOL/2011 A
(43) Publication Date : 24/07/2015

(54) Title of the invention : NOVEL TARGETS FOR ANTI-AGEING

(51) International classification	:A61K31/7048
(31) Priority Document No	:NA
(32) Priority Date	:NA
(33) Name of priority country	:NA
(86) International Application No	:NA
Filing Date	:NA
(87) International Publication No	: NA
(61) Patent of Addition to Application Number	:NA
Filing Date	:NA
(62) Divisional to Application Number	:NA
Filing Date	:NA

(71)**Name of Applicant :**
1)ITC LIMITED
Address of Applicant :37 J.L.Nehru Road Kolkata -700 071 State of West Bengal India
(72)**Name of Inventor :**
1)MURUGESAN Minnie;
2)R Arthe;
3)BHASKAR James P
4)RAMAMURTHI Suresh
5)KRISHNAN Venkat;

(57) Abstract :
A method of screening anti aging actives comprising: (a) treating human primary fibroblasts with active(s) to be screened in vitro; (b) enhancing the synthesis of collagen in fibroblast cells by appropriate actives on providing specific growth condition; (c) harvesting cells with enhanced collagen synthesis to isolate mRNA; (d) using said mRNA to isolate genes causing said enhanced collagen synthesis; (e) hybridization of differential regulated genes of Sequence ID 1, 2, 3, 4 and 5 with said isolated genes to quantify up-regulation of said isolated genes; and (f) short-listing actives based on up-regulation of at least one sequence selected from Sequence ID 1, Sequence ID 2, Sequence ID 3, Sequence ID 4 and Sequence ID 5 to provide actives that increase procollagen. Also described are the kit for screening anti aging actives in accordance with the above method and compositions comprising anti aging actives

No. of Pages : 37 No. of Claims : 7

(12) PATENT APPLICATION PUBLICATION
(19) INDIA
(22) Date of filing of Application :11/02/2010

(21) Application No.130/KOL/2010 A
(43) Publication Date : 24/07/2015

(54) Title of the invention : A PROCESS FOR PRODUCING HIGH PURITY FE2O3 FOR VALUE-ADDED APPLICATIONS INCLUDING BLAST FURNACE FEED FOR A POOR-GRADE IRON ORE SLIME

(51) International classification	:C01C1/24	(71)**Name of Applicant :**
(31) Priority Document No	:NA	**1)TATA STEEL LIMITED**
(32) Priority Date	:NA	Address of Applicant :RESEARCH ADN DEVELOPMENT AND SCIENTIFIC SERVICES DIVISION JAMSHEDPUR 831001, INDIA
(33) Name of priority country	:NA	
(86) International Application No	:NA	
Filing Date	:NA	(72)**Name of Inventor :**
(87) International Publication No	: NA	**1)MANINDRA MANNA**
(61) Patent of Addition to Application Number	:NA	**2)PRADIP KUMAR BANERJEE**
Filing Date	:NA	
(62) Divisional to Application Number	:NA	
Filing Date	:NA	

(57) Abstract :
The invention relates to a process for producing high purity Fe2O3 for valueadded applications including blast furnace feed from a poor-grade iron ore slime, comprising the steps of separating through a non-selective dispersion of ironcontaining ultra fines having different particle sizes ranging between 100 micron to 100 nm, into coarser and finer categories in a plurality of hydrocyclones of different sizes, wet-grinding the coarser category with a particle size of more than 15 microns under varied concentration to convert into finer category with a particle size of less than 15 microns; and allowing the produced fines in a single benefication step to undergo a selective flocculation by adapting a modified starch which generates a first concentrate containing around 68.5% Fe, 0.8% alumina, and 1% silica, and a first tailing containing around 29.8% Fe, 20.5% alumina, and 19.67% quartz; allowing the first concentrate to undergo a further dispersion followed by a further selective flocculation to produce high grade concentrate and a second tailing, the high grade concentrate being suitable for value-added applications; and allowing the first tailing to undergo a selective flocculation to produce a second concentrate and a second tailing, the second tailing being suitable as material for refractory and building construction, wherein the second concentrate suitable for pelletization.

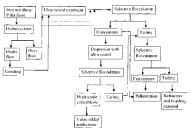

No. of Pages : 16 No. of Claims : 10

(12) PATENT APPLICATION PUBLICATION
(21) Application No.86/KOL/2014 A
(19) INDIA
(22) Date of filing of Application :22/01/2014
(43) Publication Date : 24/07/2015

(54) Title of the invention : CORE CITIZENSHIP CYBER IDENTITY FOR WEB BASED USERS ACCOUNT.

(51) International classification	:G06Q 10/00
(31) Priority Document No	:NA
(32) Priority Date	:NA
(33) Name of priority country	:NA
(86) International Application No	:NA
Filing Date	:NA
(87) International Publication No	: NA
(61) Patent of Addition to Application Number	:NA
Filing Date	:NA
(62) Divisional to Application Number	:NA
Filing Date	:NA

(71)**Name of Applicant :**
1)DEBASISH BANERJEE
Address of Applicant :H1/30 SARSUNA SATELLITE TOWNSHIP, KOLKATA - 700 061.
(72)**Name of Inventor :**
1)DEBASISH BANERJEE

(57) Abstract :
Citizenship Cyber Identity (CCI) is a unique identity for all citizens who born in their country to identify web based Users Account like citizens email account, social networking account and any other web based users account etc including the users of it. Each country Regime or Executive will create a Core Citizenship Cyber Identity system by maintaining citizens address proof and birth certificate. Citizens needs to be registered in Core Database of Citizenship Cyber Identity system through their birth certificate and address proof and if the registration will successful with valid data of birth certificate and address proof, then they will get the Citizenship Cyber ID. After getting Citizenship Cyber ID, citizens needs to activate their Citizenship Cyber ID in Core Database of Citizenship Cyber Identity system and then they need to register their Web Account ID in Core Citizenship Cyber Identity system to utilize Citizenship Cyber ID for web based users account like citizens email account, social networking account and any other web based users account. One citizen of one country cannot create Citizenship Cyber Identity of another country. Only Citizenship by Birth can create Citizenship Cyber Identity. This will also bring the adequate security to all the users of it.

No. of Pages : 36 No. of Claims : 8

(12) PATENT APPLICATION PUBLICATION
(19) INDIA
(22) Date of filing of Application :27/04/2009

(21) Application No.672/KOL/2009 A
(43) Publication Date : 24/07/2015

(54) Title of the invention : A PROCESS FOR SINTERING CHROMITE ORE

(51) International classification :C21C5/28
(31) Priority Document No :NA
(32) Priority Date :NA
(33) Name of priority country :NA
(86) International Application No :NA
Filing Date :NA
(87) International Publication No : NA
(61) Patent of Addition to Application Number :NA
Filing Date :NA
(62) Divisional to Application Number :NA
Filing Date :NA

(71)**Name of Applicant :**
1)TATA STEEL LIMITED
Address of Applicant :RESEARCH AND DEVELOPMENT AND SCIENTIFIC SERVICES DIVISION, JAMSHEDPUR 831001
(72)**Name of Inventor :**
1)MANOJ KUMAR CHOUDHARY
2)BIKASH NANDY
3)DEBASHISH BHATTACHARJEE

(57) Abstract :
A process for sintering chromite ore comprising: introducing chrome ore into the sinter pot; adding fluxing agents to the pot containing the ore; subjecting the mixture to the step of heating to produce the sintered chrome.

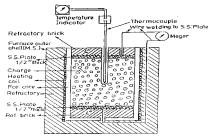

No. of Pages : 28 No. of Claims : 6

Publication Under Section 43(2) in Respect of the Grant

Following Patents have been granted and any person interested in opposing these patents under Section 25(2) may at any time within one year from the date of this issue, give notice to the Controller of Patents at the appropriate office, on the prescribed form-7 along with written statement and evidence, if any.

Serial Number	Patent Number	Application Number	Date of Application	Date of Priority	Title of Invention	Name of Patentee	Date of Publication of Abstract u/s 11(A)	Appropriate Office
1	267402	10515/DELNP/2008	11/05/2007	11/05/2007	CONTROLLED COOLING APPARATUS AND COOLING METHOD OF STEEL PLATE	NIPPON STEEL & SUMITOMO METAL CORPORATION	20/03/2009	DELHI
2	267404	7928/DELNP/2010	15/05/2009	15/05/2008	METHOD FOR PRODUCING BICYCLIC GUANIDINES BY USE OF A CYCLIC THIOUREA	PPG INDUSTRIES OHIO, INC.	02/03/2012	DELHI
3	267406	2993/DELNP/2004	20/12/2002	20/12/2002	A FIELD CONVENIENT JACKETED LEAF INACTIVATOR FOR GREEN TEA PROCESSING	OBSCHESTVO S OGRANICHENNOI OTVETSTVENNOCTIYU MACFERON	09/10/2009	DELHI
4	267407	2305/DELNP/2010	22/09/2008	28/09/2007	POLYPROPYLENE RESIN FOR SYRINGE, SYRINGE PRODUCED FROM THE SAME AS RAW MATERIAL, AND PREFILLED SYRINGE PREPARATION	MITSUI CHEMICALS, INC.,,PRIME POLYMER CO., LTD.	10/09/2010	DELHI
5	267408	1603/DELNP/2010	22/08/2008	24/08/2007	MIXED METAL OXIDE CATALYST AND PRODUCTION OF NITRIC OXIDE BY OXIDATION OF AMMONIA	YARA INTERNATIONAL ASA	06/08/2010	DELHI
6	267409	3417/DELNP/2010	27/10/2008	09/11/2007	POLYPROPYLENE RESIN COMPOSITIONS FOR AUTOMOBILE PARTS	PRIME POLYMER CO., LTD.	22/10/2010	DELHI
7	267410	1735/DELNP/2010	27/08/2008	30/08/2007	BINDER RESIN FOR COLOR TONERS AND COLOR TONER USING THE SAME	MITSUI CHEMICALS, INC.	13/08/2010	DELHI
8	267411	4962/DELNP/2009	25/06/2008	30/07/2007	SYSTEM AND PROCESS FOR PRODUCTION OF FATTY ACIDS AND WAX.ALTERNATIVES FROM TRIGLYCERIDES	HRD CORPORATION	05/03/2010	DELHI
9	267412	3277/DELNP/2009	14/12/2007	15/12/2006	COATINGS PREPARED FROM POLY (ETHYLENE OXIDE) AND PHOTO-INITATOR CONTAINING SCAFFOLDS	COLOPLAST A/S	17/07/2009	DELHI
10	267413	3763/DELNP/2005	05/05/1999	06/05/1998	A CAPACITOR ANODE	H.C. STARCK, INC. ,H.C. STARCK GMBH & CO. KG.	30/11/2007	DELHI

11	267415	4250/DELNP/2006	06/01/2005	09/01/2004	CATALYST COMPOSITIONS AND POLYOLEFINS FOR EXTRUSION COATING APPLICATIONS	CHEVRON PHILLIPS CHEMICAL COMPANY, LP	13/07/2007	DELHI
12	267416	4246/DELNP/2009	26/12/2007	27/12/2006	PROCESS FOR PRODUCING VINYL SULFONIC ACID	ASAHI KASEI FINECHEM CO.,LTD	19/03/2010	DELHI
13	267417	3099/DELNP/2010	06/02/2009	08/02/2008	COMPOSITIONS AND DEVICES	COLGATE-PALMOLIVE COMPANY	15/10/2010	DELHI
14	267419	9044/DELNP/2008	14/05/2007	16/05/2006	PROCESS FOR THE PREPARATION OF PYRAZOLYLAMINOQUINAZOLINE DERIVATIVES COMPRISING A PHOSPHATE GROUP	ASTRAZENECA AB	27/03/2009	DELHI
15	267420	3102/DELNP/2010	06/02/2009	08/02/2008	ORAL CARE PRODUCT AND METHODS OF USE AND MANUFACTIRE THEREOF	COLGATE-PALMOLIVE COMPANY	15/10/2010	DELHI
16	267421	4869/DELNP/2006	24/02/2005	27/02/2004	POLYAPHRON DISPERSION CONTAINING A COMPLEX INTERNAL PHASE	DRUG DELIVERY SOLUTIONS LIMITED	10/08/2007	DELHI
17	267424	2903/DELNP/2006	02/11/2004	27/11/2003	A TELECOMMUNICATIONS DEVICE ADAPTED TO SELECT A NUMBER OF ADDRESS FROM A LIST	SONY ERICSSON MOBILE COMMUNICATIONS AB	20/04/2007	DELHI
18	267426	7508/DELNP/2007	31/03/2006	31/03/2005	APPARATUS FOR DISPLAYING IDENTITY OF THE LAST SPEAKER IN A PUSH-TO-TALK COMMUNICATION SYSTEM	QUALCOMM INCORPORATED,	11/07/2008	DELHI
19	267427	5114/DELNP/2007	09/08/2005	20/12/2004	METAL TOUCH TYPE BUTTERFLY VALVE	SASAKURA ENGINEERING CO, LTD	17/08/2007	DELHI
20	267429	2154/DELNP/2009	07/10/2006	07/10/2006	GREASE COMPOSITION FOR USE IN CONSTANT VELOCITY JOINT COMPRISING AT LEAST ONE TRINUCLEAR MOLYBDENUM COMPOUND	GKN DRIVELINE INTERNATIONAL GMBH	20/08/2010	DELHI
21	267430	2083/DELNP/2007	22/09/2005	29/09/2004	A DATA NETWORK FOR DISTRIBUTION OF REQUESTED DATA	SIEMENS AKTIENGESELLSCHAFT	04/05/2007	DELHI
22	267432	1064/DELNP/2009	13/08/2007	14/08/2006	METHOD AND APPARATUS FOR FORMING AMORPHOUS COATING FILM	NAKAYAMA AMORPHOUS CO.,LTD.	20/08/2010	DELHI
23	267433	2068/DEL/2006	20/09/2006	12/10/2005	A MOTORCYCLE HAVING A POWER UNIT	HONDA MOTOR CO., LTD.	03/08/2007	DELHI
24	267434	359/DEL/2006	07/02/2006		A SHIKIMIC ACID HEAD GROUP BASED CATIONIC AMPHIPHILES AND A PROCESS FOR SYNTHESIS THEREOF	COUNCIL OF SCIENTIFIC AND INDUSTRIAL RESEARCH,DABUR RESEARCH FOUNDATION	12/02/2010	DELHI
25	267435	3799/DELNP/2009	31/10/2007	10/11/2006	WATER BASED PRINTING INKS FOR NON-WOVEN SUBSTRATES	SUN CHEMICAL CORPORATION	19/03/2010	DELHI

26	267437	230/DELNP/2008	27/06/2000	30/06/2005	"ADSORBENT AND CATALYST MIXTURES"	PRAXAIOR TECHNOLOGY, INC., TECHNOLOGY LICENSORS	15/08/2008	DELHI
27	267438	3273/DELNP/2007	24/04/2001	24/04/2000	METHOD OF TREATING HYDROCARBON CONTAINING FORMATION IN SITU	SHELL INTERNATIONALE RESEARCH MAATSCHAPPIJ B.V.	31/08/2007	DELHI
28	267439	4870/DELNP/2008	05/12/2006	21/12/2005	PHOTOCHROMIC INDENO-FUSED NAPHTHOPYRANS	TRANSITIONS OPTICAL, INC.	15/08/2008	DELHI
29	267440	1427/DELNP/2007	07/09/2005	07/09/2004	CONCENTRATED AQUEOUS BROMINE SOLUTIONS AND THEIR PREPARATION	ALBEMARLE CORPORATION	03/08/2007	DELHI
30	267441	2471/DELNP/2010	20/10/2008	22/10/2007	ADDITIVE FOR POLYMERS AND PROCESS FOR PREPARATION THEREOF	SACHTLEBEN CHEMIE GMBH	01/10/2010	DELHI
31	267442	7552/DELNP/2007	27/03/2006	06/04/2005	FUNGICIDAL ACTIVE COMPOUND COMBINATION	BAYER CROPSCIENCE AG	09/11/2007	DELHI
32	267443	9002/DELNP/2008	17/06/2004	27/06/2003	A METHOD FOR PREPARING MEDICAMENT SUSTAINED RELEASE PARTICLES AND PARTICLES THEREOF	OTSUKA PHARMACEUTICAL CO.,LTD	22/05/2009	DELHI
33	267444	58/DELNP/2008	19/06/2006	17/06/2005	PARTICLES COMPRISING A RELEASABLE DOPANT THEREIN	AUSTRALIAN NUCLEAR SCIENCE AND TECHNOLOGY ORGANISATION	11/07/2008	DELHI
34	267446	2803/DELNP/2007	19/10/2005	20/10/2004	PULL-PUSH ROD	GMT GUMMI-METALL-TECHNIK GMBH,TRIGUM ENGINEERING GMBH	03/08/2007	DELHI
35	267447	311/DEL/2005	14/02/2005		AN EMULSION COMPOSITION FOR MEDIUM AND HARD STRATA EXCAVATION WORK	COUNCIL OF SCIENTIFIC & INDUSTRIAL RESEARCH	01/12/2006	DELHI
36	267449	427/DELNP/2007	14/07/2005	27/07/2004	PROCESS FOR MAKING A CARBON NANOTUBES/ULTRA-HIGH MOLAR MASS POLYETHYLENE COMPOSITE FIBRE	DSM IP ASSETS B.V	17/08/2007	DELHI
37	267450	5704/DELNP/2010	17/02/2009	21/02/2008	PROCESS FOR PRODUCING 2-PROPANOL	MITSUI CHEMICALS, INC.	03/02/2012	DELHI
38	267452	1809/DELNP/2009	13/09/2007	13/09/2006	CATALYSTS COMPOSITIONS FOR USE IN FUEL CELLS •	UNIVERSITY OF AKRON	22/05/2009	DELHI
39	267453	7844/DELNP/2008	09/03/2007	10/03/2006	PROCESS FOR PRODUCING OPTICALLY ACTIVE CHROMENE OXIDE COMPOUND	NISSAN CHEMICAL INDUSTRIES, LTD	27/03/2009	DELHI
40	267454	5669/DELNP/2008	12/01/2007	17/01/2006	SELECTIVE CATALYST HAVING SILICA SUPPORTS FOR NAPHTHA HYDRODESULFURIZATION	EXXONMOBIL RESEARCH AND ENGINEERING COMPANY	26/09/2008	DELHI

41	267455	8267/DELNP/2010	21/04/2009	30/05/2008	POLYOLEFIN-BASED CROSSLINKED ARTICLES	EXXONMOBIL CHEMICAL PATENTS INC.	02/03/2012	DELHI
42	267463	74/DELNP/2009	12/07/2007	12/07/2006	A METHOD FOR INCREASING THE IMMUNOGENICITY OF A HLA-B0702 RESTRICTED CRYPTIC EPITOPE	VAXON BIOTECH	31/07/2009	DELHI
43	267464	8357/DELNP/2007	15/05/2006	31/05/2005	A TOPICAL COMPOSITION COMPRISING A DIBENZOYLMETHANE AND A SILICON CONTAINING s-TRIAZINE	L'OREAL	04/07/2008	DELHI
44	267470	3980/DELNP/2007	02/11/2005	02/11/2004	GRIPPING MAT	JACKEL INTERNATIOAL LIMITED	31/08/2007	DELHI
45	267472	2321/DEL/2006	23/10/2006	30/07/2006	SLIDE PEN	MORRIS CORPORATION	15/02/2008	DELHI
46	267476	916/DELNP/2009	10/08/2007	11/08/2006	PREPARATION OF ALUMINUM PHOSPHATE OR POLYPHOSPHATE PARTICLES	BUNGE FERTILIZANTES S. A.,UNIVRSIDADE ESTADUAL DE CAMPINAS	12/06/2009	DELHI
47	267477	3720/DELNP/2008	07/11/2006	07/11/2005	A PROCESS FOR THE PREPARATION OF THE FUNCTIONAL FLUID	SPECIALIST PROCESS TECHNOLOGIES LIMITED.	15/08/2008	DELHI
48	267478	1275/DEL/2006	26/05/2006 12:11:58	27/05/2005	PROCESS FOR MANUFACTURING A COMPONENT WITH AN INSERT MADE OF A COMPOSITE OF A METAL MATRIX AND CERAMIC FIBERS	SNECMA	03/08/2007	DELHI
49	267482	6169/DELNP/2008	27/02/2007	01/03/2006	POLYCARBOXYLIC ACID PRODUCTION SYSTEM EMPLOYING HOT LIQUOR REMOVAL DOWNSTREAM OF OXIDATIVE DIGESTION	GRUPO PETROTEMEX, S.A. DE C.V.	24/10/2008	DELHI
50	267483	209/DEL/2008	25/01/2008 11:41:04		A PROCESS FOR THE PREPARATION OF OXIDE SUPERCONDUCTING ROD.	COUNCIL OF SCIENTIFIC & INDUSTRIAL RESEARCH	07/08/2009	DELHI
51	267484	2780/DELNP/2007	03/03/2005	19/10/2004	REINFORCING STRIP FOR SUPPORTING REINFORCED EARTH WALL AND ITS PLACEMENT METHOD	LEE,JEUNG SU	17/08/2007	DELHI
52	267486	632/DELNP/2009	27/07/2007	31/07/2006	AQUEOUS DISPERSIONS OF POLYURETHANE COMPOSITIONS WITH KETONE-HYDRAZIDE	LUBRIZOL ADVANCED MATERIALS, INC.	20/08/2010	DELHI
53	267488	3934/DELNP/2008	13/09/2006	19/10/2005	PROCESS FOR CONVERTING GASEOUS ALKANES TO OLEFINS AND LIQUID HYDROCARBONS	MARATHON OIL COMPANY	11/07/2008	DELHI
54	267489	877/DELNP/2010	22/08/2008	27/08/2007	SYNERGISTIC HERBICIDAL COMPOSITION CONTAINING CERTAIN PYRIDINE OR PYRIMIDINE CARBOXYLIC ACIDS AND CERTAIN CEREAL AND RICE HERBICIDES	DOW AGROSCIENCES LLC.,	06/08/2010	DELHI

55	267490	476/DELNP/2004	30/08/2002	31/08/2001	A COMPOUND OF THE FORMULA (I)	BTG INTERNATIONAL LIMITED	10/03/2006	DELHI
56	267491	3564/DELNP/2007	05/11/2005	18/11/2004	COMPOUND OF STRUCTURE (IA)	BAYER CROPSCIENCE AG	31/08/2007	DELHI
57	267496	4959/DELNP/2008	22/12/2006	23/12/2005	FORMULATION	SYNGENTA LIMITED	08/08/2008	DELHI
58	267497	5335/DELNP/2008	11/12/2006	13/12/2005	INSECTICIDAL COMPOSITIONS HAVING IMPROVED EFFECT	BAYER INTELLECTUAL PROPERTY GMBH	08/08/2008	DELHI
59	267502	1532/DEL/2006	29/06/2006 11:53:36	29/07/2005	A TRAY VALVE FOR A TRAY COLUMN	SULZER CHEMTECH AG	13/07/2007	DELHI
60	267503	1049/DEL/2005	27/04/2005	05/05/2004	HUMIDITY ACTIVATED DELIVERY SYSTEMS FOR CYCLOPROPENES	ROHM AND HAAS COMPANY	01/12/2006	DELHI
61	267505	1866/DEL/2004	29/09/2004	30/09/2003	A TEXTILE MACHINE AND THE CONTROL METHOD THEREOF	LUIGI OMODEO ZORINI	22/09/2006	DELHI
62	267507	5015/DELNP/2009	09/02/2007	09/02/2007	ADSORBENT AND A METHOD FOR THE PRODUCTION THEREOF	OBSHCHESTVO S OGRANICHENNOY OTVETSTVENNOSTYU ESFARM	05/03/2010	DELHI
63	267508	231/DEL/2007	06/02/2007 12:36:24		A PROCESS FOR THE SYNTHESIS OF COILED CARBON NETWORKS BY CATALYTIC CHEMICAL VAPOUR DEPOSITION (CCVD) METHOD WITHOUT SULPHUROUS PROMOTERS	DIRECTOR GENERAL, DEFENCE RESEARCH & DEVELOPMENT ORGANISATION	05/09/2008	DELHI
64	267509	915/DEL/2007	25/04/2007 12:39:51	09/05/2006	ALIPHATIC SINTERABLE, THERMOPLASTIC POLYURETHANE MOLDING COMPOSITIONS WITH IMPROVED BLOOMING BEHAVIOR	BAYER MATERIALSCIENCE AG	23/11/2007	DELHI
65	267510	633/DELNP/2010	16/07/2008	01/08/2007	HYDROCARBON CONVERSION UNIT INCLUDING A REACTION ZONE RECEIVING TRANSFERRED CATALYST	UOP LLC	14/10/2011	DELHI
66	267512	4522/DELNP/2007	16/12/2005	16/12/2004	METHOD OF MAKING A THICK PART OUT OF COMPOSITE MATERIAL COMPRISING FIBRE REINFORCEMENT AND A RESIN MATRIX	HERAKLES	31/08/2007	DELHI
67	267524	1494/DEL/2007	17/07/2007 12:24:59	25/08/2006	ENGINE-DRIVEN WORK MACHINE	HONDA MOTOR CO.,LTD.	04/04/2008	DELHI
68	267526	4601/DELNP/2009	28/12/2007	29/12/2006	ANTIFUNGAL TRIAZOLE DERIVATIVES, METHOD FOR THE PREPARATION THEREOF AND PHARMACEUTICAL COMPOSITION CONTAINING SAME	DAEWOONG PHARMACEUTICAL CO., LTD.	12/02/2010	DELHI

69	267527	2046/DEL/2006	18/09/2006		A METHOD FOR PREPARATION OF CROSS LINKED PROTEIN MICROCRYSTALS	INDIAN INSTITUTE OF TECHNOLOGY	04/04/2008	DELHI
70	267528	77/DEL/2007	11/01/2007	24/01/2006	A SURGICAL CASSETTE HAVING A BODY	ALCON, INC.	03/08/2007	DELHI
71	267532	1106/DEL/1998	27/04/1998		A PROCESS FOR THE PREPARATION OF SUBSTITUTED CYCLOALKANONES	COUNCIL OF SCIENTIFIC & INDUSTRIAL RESEARCH,	25/03/2005	DELHI
72	267533	1897/DEL/2009	15/09/2009 10:47:45		A PROCESS FOR THE PREPARATION OF READY TO EAT SOY FORTIFIED OAT-BAR	DIRECTOR GENERAL, DEFENCE, RESEARCH & DEVELOPMENT ORGANIZATION	18/03/2011	DELHI
73	267534	95/DEL/2001	31/01/2001		AN IMPROVED METHOD FOR RECOVERY OF CAROTENOIDS FROM CRUSTACEAN WASTE	COUNCIL OF SCIENTIFIC AND INDUSTRIAL, RESEARCH	01/03/2013	DELHI
74	267535	218/DEL/2000	09/03/2000		AN IMPROVED PROCESS FOR THE PRODUCTION OF 6-PENTYL-α-PYRONE WITH COCONUT FLAVOUR	COUNCIL OF SCIENTIFIC AND INDUSTRIAL RESEARCH	16/03/2012	DELHI
75	267536	4207/DELNP/2006	21/01/2005	23/01/2004	A POWERED TOOTHBRUSH WITH A TEST BUTTON FOR MOMENTARILY TESTING OPERABILITY OF THE TOOTHBRUSH	COLGATE-PALMOLIVE COMPANY	22/06/2007	DELHI
76	267538	2114/DEL/2006	26/09/2006 11:18:30		CONVERSION OF VEGETABLE OILS TO BIO-DIESEL	INDIAN INSTITUTE OF TECHNOLOGY	06/06/2008	DELHI
77	267539	8168/DELNP/2008	11/04/2007	22/04/2006	STABILIZATION OF DIESTERS OF DICARBONIC ACID	LANXESS DEUTSCHLAND GMBH	01/05/2009	DELHI
78	267540	9746/DELNP/2007	22/05/2006	25/05/2005	PROCESS FOR PREPARING (ALPHA S, BETA R)-6-BROMO-ALPHA-[2-(DIMETHYLAMINO)ETHYL]-2-METHOXY-ALPHA-1-NAPHTHALENYL-BETA-PHENYL-3-QUINOLINEETHANOL	JANSSEN PHARMACEUTICA N.V.	20/06/2008	DELHI
79	267545	4283/DELNP/2008	05/10/2006	11/11/2005	AN ELECTRONIC CIRCUIT ARRANGEMENT FOR USE IN MOTOR VEHICLE TRANSMISSION SYSTEM	CONTINENTAL AUTOMOTIVE GMBH,ZF FRIEDRICHSHAFEN AG	01/08/2008	DELHI
80	267547	8301/DELNP/2008	27/03/2007	29/03/2006	A PROCESS FOR PRODUCING A COMPOUND REPRESENTED BY THE GENERAL FORMULA (4)	MITSUI CHEMICALS, INC	27/03/2009	DELHI
81	267549	1789/DEL/2010	30/07/2010 14:48:25	21/09/2009	SELECTIVE HYDROGENATION OF DIENES IN THE MANUFACTURE OF MLAB	UOP LLC	27/09/2013	DELHI

82	267552	5717/DELNP/2007	10/02/2006	11/02/2005	A SYNERGISTIC HERBICIDAL COMPOSITION COMPRISING PENOXSULAM AND A SECOND HERBICIDE	DOW AGROSCIENCES LLC	17/08/2007	DELHI
83	267554	788/DEL/2000	01/09/2000		A PROCESS FOR THE PURIFICATION OF INORGANIC NITROGEN LADEN WASTE WASTE AND OR WATER	COUNCIL OF SCIENTIFIC AND INDUSTRIAL RESEARCH	16/01/2009	DELHI
84	267555	2638/DELNP/2006	21/10/2004	21/10/2003	ELUTABLE SURFACE COATING COATING FOR A MEDICAL DEVICE	ALLVIVO INC	10/08/2007	DELHI
85	267558	1444/DEL/2005	03/06/2005		A PROCESS FOR PREPARATION OF IMPROVED ION-EXCHANGE MEMBRANES	DIRECTOR GENERAL, DEFENCE RESEARCH & DEVELOPMENT ORGANISATION,	24/08/2007	DELHI
86	267564	8431/DELNP/2007	13/04/2006	22/04/2005	LOW PROFILE, LARGE SCREEN DISPLAY USING A REAR PROJECTION ARRAY SYSTEM	OSTENDO TECHNOLOGIES, INC.	04/07/2008	DELHI

Publication Under Section 43(2) in Respect of the Grant

Following Patents have been granted and any person interested in opposing these patents under Section 25(2) may at any time within one year from the date of this issue, give notice to the Controller of Patents at the appropriate office, on the prescribed form-7 along with written statement and evidence, if any.

Serial Number	Patent Number	Application Number	Date of Application	Date of Priority	Title of Invention	Name of Patentee	Date of Publication of Abstract u/s 11(A)	Appropriate Office
1	267418	1524/MUMNP/2007	25/04/2006	29/04/2005	LID OF AN ELECTRIC ARC FURNACE	OUTOTEC OYJ	02/11/2007	MUMBAI
2	267422	1266/MUMNP/2008	22/11/2006	29/11/2005	INFORMATION REPRODUCING APPARATUS FOR DISPLAYING ATLEAST THE SUB-PICTURE OF ASYNC TYPE	PIONEER CORPORATION	17/10/2008	MUMBAI
3	267425	2293/MUMNP/2008	15/05/2007	16/05/2006	GRAPHICS SYSTEM WITH DYNAMIC REPOSITION OF DEPTH ENGINE	QUALCOMM INCORPORATED	16/01/2009	MUMBAI
4	267456	935/MUMNP/2009	27/09/2006	28/11/2006	INCLINATION SENSOR WITH OPTOELECTRONIC LEVEL	SARTORIUS LAB INSTRUMENTS GMBH & CO. KG.	12/11/2010	MUMBAI
5	267468	340/MUM/2007	20/02/2007		SEISMIC PROOF POWER TRANSFORMER	CROMPTON GREAVES LTD	17/10/2008	MUMBAI
6	267469	2306/MUM/2010	17/08/2010 12:10:29		SODIUM FREE FOOD PRESERVATIVE	SUNILDATTA KRISHNAJI JOG	23/09/2011	MUMBAI
7	267471	2578/MUMNP/2008	17/07/2007	18/07/2006	OPERATION OF A STEAM METHANE REFORMER BY DIRECT FEEDING OF STEAM RICH PRODUCER GAS FROM STEAM HYDRO-GASIFICATION	THE REGENTS OF THE UNIVERSITY OF CALIFORNIA	27/02/2009	MUMBAI
8	267473	1636/MUMNP/2011	26/04/2010	30/04/2009	IMPROVED MULTI-STAGE PROCESS FOR PRODUCING MULTI-MODAL LINEAR LOW DENSITY POLYETHYLENE	BOREALIS AG	19/10/2012	MUMBAI
9	267474	2031/MUMNP/2008	23/09/2008	23/09/2008	A TORSIONAL VIBRATION DAMPER HUB FOR A VEHICLE CLUTCH	VOLVO LASTVAGNAR AB	20/05/2011	MUMBAI
10	267475	2196/MUMNP/2010	10/03/2009	18/03/2008	FLUID TRANSFER ASSEMBLIES AND RELATED METHODS	SAINT-GOBAIN PERFORMANCE PLASTICS CORPORATION	25/02/2011	MUMBAI
11	267494	1083/MUM/2006	10/10/2006		LIQUID JET NOZZLES/SPRINKLERS PLACED IN COOLING TOWER	HARANI BHAGWANJI DEVJI,HARANI SHAILESH BHAGWAN	28/11/2008	MUMBAI

12	267495	2581/MUMNP/2008	13/06/2007	14/06/2006	A GLITCH-FREE CLOCK SIGNAL MULTIPLEXER CIRCUIT AND METHOD OF OPERATION THEREOF	QUALCOMM INCORPORATED	16/01/2009	MUMBAI
13	267500	324/MUMNP/2010	26/02/2009	27/02/2008	CATALYST FOR TREATING EXHAUST GAS	MITSUBISHI HEAVY INDUSTRIES, LTD.	16/07/2010	MUMBAI
14	267511	1114/MUMNP/2007	01/02/2006	01/02/2005	PROCESS FOR APPLYING AN ELECTRONIC ASSEMBLY TO A SUBSTRATE	NAGRALD SA	12/10/2007	MUMBAI
15	267515	1459/MUMNP/2008	03/01/2007	06/01/2006	METHOD AND APPARATUS FOR TRANSMITTING/RECEIVING UPLINK SIGNALING INFORMATION IN A SINGLE CARRIER FDMA SYSTEM	SAMSUNG ELECTRONICS CO., LTD.	10/10/2008	MUMBAI
16	267521	1191/MUMNP/2009	19/12/2007	22/12/2006	ANNOTATION FRAMEWORK FOR VIDEO	GOOGLE INC.	17/07/2009	MUMBAI
17	267531	1624/MUMNP/2008	27/02/2007	28/02/2006	AN EYELESS SEWING NEEDLE	MANI, INC.	27/02/2009	MUMBAI
18	267541	576/MUMNP/2009	25/10/2007	03/11/2006	A SYSTEM AND METHOD FOR USING A WORKING GLOBAL HISTORY REGISTER •	QUALCOMM INCORPORATED	22/05/2009	MUMBAI
19	267543	1982/MUM/2008	18/09/2008 14:36:03		A PROCESS FOR THE PREPARATION OF SYNTHETIC TANNING COMPOSITION FROM SOLID WASTE	TATA INTERNATIONAL LIMITED	30/07/2010	MUMBAI
20	267544	887/MUMNP/2009	09/11/2007	14/11/2006	MEMORY EFFICIENT CODING OF VARIABLE LENGTH CODES™	QUALCOMM INCORPORATED	22/05/2009	MUMBAI
21	267546	245/MUM/2006	21/02/2006		AN IMPROVED PROCESS FOR THE PREPARATION OF ATORVASTATIN CALCIUM	CADILA HEALTHCARE LIMITED	26/06/2009	MUMBAI
22	267548	275/MUM/2009	10/02/2009 10:25:50	23/02/2008	CONVEYING DEVICE	KRONES AG	27/08/2010	MUMBAI
23	267550	377/MUMNP/2008	28/07/2006	01/08/2005	A METHOD OF RETORTING A SELF-HEATING CONTAINER	HOT-CAN INTELLECTUAL PROPERTY SDN. BHD.	14/03/2008	MUMBAI
24	267551	435/MUMNP/2008	22/12/2005	23/06/2005	A COOLING APPARATUS OF THICK-GAUGE STEEL PLATE	NIPPON STEEL AND SUMITOMO METAL CORPORATION	01/05/2009	MUMBAI
25	267559	2491/MUMNP/2008	07/06/2007	23/06/2006	TAKE-UP TYPE VACUUM VAPOR DEPOSITION APPARATUS	ULVAC, INC.	13/03/2009	MUMBAI

26	267571	695/MUMNP/2009	13/09/2007	14/09/2006	HIGH CONCENTRATION PELLETIZED ADDITIVE CONCENTRATES FOR POLYMER •	INGENIA POLYMERS INC.	22/05/2009	MUMBAI
27	267572	2498/MUMNP/2008	14/06/2006	14/06/2006	METHOD AND SYSTEM FOR REGENERATING AN EXHAUST GAS PURIFICATION UNIT	VOLVO LASTVAGNAR AB	27/02/2009	MUMBAI
28	267592	1752/MUM/2006	20/10/2006		A FULLY AUTOMATIC WATER COOLED AGITATED ROTARY POSITIVE DISPLACEMENT GRATE	ATRE ASHOK DATTATRAYA	18/07/2008	MUMBAI

Publication Under Section 43(2) in Respect of the Grant

Following Patents have been granted and any person interested in opposing these patents under Section 25(2) may at any time within one year from the date of this issue, give notice to the Controller of Patents at the appropriate office, on the prescribed form-7 along with written statement and evidence, if any.

Serial Number	Patent Number	Application Number	Date of Application	Date of Priority	Title of Invention	Name of Patentee	Date of Publication of Abstract u/s 11(A)	Appropriate Office
1	267403	4714/CHENP/2008	06/02/2007	07/02/2006	METHOD FOR PREPARING PROSTAGLANDIN DERIVATIVE	R-TECH UENO, LTD.,SUCAMPO AG	13/03/2009	CHENNAI
2	267405	635/CHENP/2008	07/07/2006	08/07/2005	ADHESIVE PREPARATION COMPRISING OLOPATADINE	SENJU PHARMACEUTICAL Co.,Ltd.,	28/11/2008	CHENNAI
3	267423	858/CHE/2006	16/05/2006		METHD AND SYSTEM TO CAPTURE, MAINTAIN AND REUSE PRODUCT-PROCESS INFORMATION IN PRODUCT LIFECYCLE MANAGEMENT	INDIAN INSTITUTE OF SCIENCE	25/04/2008	CHENNAI
4	267431	992/CHENP/2007	19/08/2005	09/09/2004	ELEVATOR CAR AND METHOD OF INSTALLING AN ELEVATOR	INVENTIO AG	24/08/2007	CHENNAI
5	267448	1090/CHENP/2008	04/08/2006	04/08/2005	A TRACTION DRIVE SYSTEM	ASHLAND LICENSING AND INTELLECTUAL PROPERTY, LLC	12/09/2008	CHENNAI
6	267451	5735/CHENP/2008	20/04/2007	28/04/2006	METHOD FOR DYNAMIC DATA NAVIGATION	HEWLETT-PACKARD DEVELOPMENT COMPAN,Y L.P.	27/03/2009	CHENNAI
7	267458	1042/CHE/2006	16/06/2006	17/06/2005	A PROGRESSIVE SAFETY DEVICE FOR AN ELEVATOR	INVENTIO AG	22/06/2007	CHENNAI
8	267461	175/CHENP/2008	09/06/2006	13/06/2005	PROCESS FOR SYNTHESIS OF DIALKOXYORGANOBORANES	BASF AKTIENGESELLSCHAFT	19/09/2008	CHENNAI
9	267462	5630/CHENP/2007	19/06/2006	20/06/2005	IMPROVED PERFLUORINATED MEMBRANES AND IMPROVED ELECTROLYTES FOR REDOX CELLS AND BATTERIES	NEWSOUTH INNOVATIONS PTY LIMITED	28/03/2008	CHENNAI

10	267465	218/CHENP/2008	14/07/2006	15/07/2005	AQUEOUS EMULSION POLYMERIZATION OF FLUORINATED MONOMERS USING A FLUORINATED SURFACTANT	3M INNOVATIVE PROPERTIES COMPANY	19/09/2008	CHENNAI
11	267466	948/CHENP/2009	17/09/2007	19/09/2006	METHOD OF PROVIDING COMMUNICATION SERVICES FOR A MOBILE STATION HAVING A PLURALITY OF COMMUNICATION INTERFACES	Qualcomm Incorporated	05/06/2009	CHENNAI
12	267467	162/CHENP/2008	12/06/2006	13/06/2005	METHOD FOR PRODUCING ALPHA, B-UNSATURATED CABOXYLIC ACID	MITSUBISHI RAYON CO., LTD	19/09/2008	CHENNAI
13	267479	4585/CHENP/2008	15/01/2007	01/02/2006	METHOD FOR THE PRODUCTION OF A FOAMED SLAG IN A METAL BATH	SMS Siemag Aktiengesellschaft	13/03/2009	CHENNAI
14	267480	5978/CHENP/2007	26/05/2006	26/05/2005	METAL LOCKING TIE	PANDUIT CORP.	27/06/2008	CHENNAI
15	267481	262/CHENP/2008	05/06/2006	17/06/2005	COMPRESSION MOLDING MACHINE	SACMI COOPERATIVA MECCANICI IMOLA SOCIETA' COOPERATIVA	19/09/2008	CHENNAI
16	267485	4866/CHENP/2009	11/06/2008	12/06/2007	A MOBILE STATION DEVICE, BASE STATION DEVICE AND METHOD OF PROCESSING	SHARP KABUSHIKI KAISHA	23/10/2009	CHENNAI
17	267492	4154/CHENP/2009	05/12/2007	18/12/2006	VORTEX FLOWMETER WITH TEMPERATURE COMPENSATION	ROSEMOUNT INC.	07/08/2009	CHENNAI
18	267493	1620/CHE/2007	26/07/2007	28/07/2006	A CATALYST AND A PROCESS FOR HYDRODESULPHURIZIN G GASOLINE CUTS	IFP	11/09/2009	CHENNAI
19	267501	3674/CHENP/2007	22/02/2006	23/02/2005	QUINAZOLINE DERIVATIVES HAVING TYROSINE KINASE INHIBITORY ACTIVITY	Shionogi & Co., Ltd	16/11/2007	CHENNAI
20	267514	4350/CHENP/2007	17/02/2006	02/03/2005	A METHOD OF CONTROLLING A PRINTING APPARATUS AND AN INFORMATION PROCESSING APPARATUS	CANON KABUSHIKI KAISHA	25/01/2008	CHENNAI
21	267517	47/CHENP/2008	03/07/2006	06/07/2005	APPARATUS AND METHOD FOR ACOUSTIC BEAMFORMING	KONINKLIJKE PHILIPS ELECTRONICS N.V.	28/11/2008	CHENNAI

22	267518	6727/CHENP/2008	06/06/2007	13/06/2006	METHOD FOR SETTING UP A CONNECTION IN A MOBILE TELECOMMUNICATION NETWORK	Nokia Corporation	21/08/2009	CHENNAI
23	267519	2973/CHENP/2009	05/12/2007	26/12/2006	MOBILE VIDEO CALL RESPONSE	Nokia Corporation	21/08/2009	CHENNAI
24	267520	2408/CHENP/2008	27/10/2006	14/11/2005	THIN AND EFFICIENT LIGHT COLLIMATING DEVICE	KONINKLIJKE PHILIPS ELECTRONICS N.V	06/03/2009	CHENNAI
25	267522	1998/CHE/2009	21/08/2009 16:33:57	25/08/2008	DEVELOPING ROLLER, AND ELECTROPHOTOGRAPH IC PROCESS CARTRIDGE AND ELECTROPHOTOGRAPH IC IMAGE FORMING APPARATUS COMPRISING THE DEVELOPING ROLLER	CANON KABUSHIKI KAISHA	05/03/2010	CHENNAI
26	267523	1550/CHENP/2007	14/09/2005	16/09/2004	METHOD AND FACILITY FOR MANUFACTURING FUEL CELL	ROHM CO., LTD	31/08/2007	CHENNAI
27	267525	282/CHENP/2009	10/07/2007	17/07/2006	COMMUNICATION DEVICE AND METHOD OF LIMITING QUANTITY OF DATA TRANSMITTED BY A COMMUNICATION DEVICE	ABB RESEARCH LTD.,	05/06/2009	CHENNAI
28	267529	4647/CHENP/2007	19/04/2006	19/04/2005	LOW PRESSURE CARBONITRIDING METHOD AND DEVICE	ETUDES ET CONSTRUCTIONS MECANIQUES	11/01/2008	CHENNAI
29	267530	263/CHENP/2007	21/07/2005	21/07/2004	AN APPARATUS FOR PROGRAMMING A PACEMAKER	IMPERIAL INNOVATIONS LIMITED	24/08/2007	CHENNAI
30	267553	5600/CHENP/2007	04/05/2006	05/05/2005	PROCESS FOR PREPARING CHLORIDES OF PHTHALOCYANINE DERIVATIVES COMPRISING AT LEAST A QUATERNARY AMMONIUM GROUP	MOLTENI THERAPEUTICS S.R.L	28/03/2008	CHENNAI
31	267556	4478/CHENP/2009	07/01/2008	29/01/2007	HIGH-STRENGTH HOT-DIP GALVANNEALED STEEL SHEET WITH SUPERIOR PHOSPHATABILITY	KABUSHIKI KAISHA KOBE SEIKO SHO (KOBE STEEL, LTD.)	11/09/2009	CHENNAI
32	267568	232/CHENP/2008	14/07/2006	15/07/2005	AQUEOUS EMULSION POLYMERIZATION OF FLUORINATED MONOMERS USING A PERFLUOROPOLYETHE R SURFACTANT	3M INNOVATIVE PROPERTIES COMPANY	19/09/2008	CHENNAI

33	267569	4950/CHENP/2011	26/11/2009	13/01/2009	PROCESS FOR PURIFYING VANCOMYCIN WET BODY	SAMYANG GENEXBIO CORPORATION,GENOTECH CO., LTD.	28/09/2012	CHENNAI
34	267574	1329/CHENP/2008	25/01/2007	17/04/2006	METHOD AND APPARATUS FOR TRANSMITTING VOICE DATA	Huawei Technologies Co., Ltd.	28/11/2008	CHENNAI
35	267577	4987/CHENP/2007	31/03/2006	04/04/2005	METHOD OF CONVERTING SIGNALS FOR MULTI-PRIMARY COLOR DISPLAY	KONINKLIJKE PHILIPS ELECTRONICS N.V.	27/06/2008	CHENNAI
36	267582	1771/CHENP/2006	21/11/2003	21/11/2003	METHOD AND SYSTEM FOR DISCOVERING SERVICES FOR A WIRELESS MULTIMODE AND ASSOCIATED WIRELESS MULTIMODE TERMINAL	NOKIA CORPORATION	06/07/2007	CHENNAI
37	267589	693/CHENP/2008	08/08/2006	10/08/2005	ORALLY DISINTEGRATING TABLET	SHIONOGI & CO, LTD	28/11/2008	CHENNAI

Publication Under Section 43(2) in Respect of the Grant

Following Patents have been granted and any person interested in opposing these patents under Section 25(2) may at any time within one year from the date of this issue, give notice to the Controller of Patents at the appropriate office, on the prescribed form-7 along with written statement and evidence, if any.

Serial Number	Patent Number	Application Number	Date of Application	Date of Priority	Title of Invention	Name of Patentee	Date of Publication of Abstract u/s 11(A)	Appropriate Office
1	267414	1465/KOLNP/2007	30/12/2005	30/12/2004	A METHOD OF UPDATING CHANNEL INFORMATION BY A MOBILE STATION THAT IS IN POWER SAVING MODE.	LG ELECTRONICS, INC.	20/07/2007	KOLKATA
2	267428	4593/KOLNP/2008	13/04/2007	13/04/2006	REDCUTION OF ELECTROSTATIC CHARGE IN A POLYMERISATION PROCESS	TOTAL PETROCHEMICALS RESEARCH FELUY	13/03/2009	KOLKATA
3	267436	1377/KOL/2008	18/08/2008 17:02:07	15/08/2007	METHOD FOR UPDATING MINIMUM AND MAXIMUM ENERGY STORAGE VALUES	GM GLOBAL TECHNOLOGY OPERATIONS, INC.	01/05/2009	KOLKATA
4	267445	1055/KOLNP/2009	21/08/2007	21/08/2006	4-SUBSTITUTED PHENOXYPHENYLACETIC ACID BASED COMPOUNDS AS DP2 RECEPTOR MODULATORS	ARRAY BIOPHARMA INC.	22/05/2009	KOLKATA
5	267457	3793/KOLNP/2008	01/10/2007	29/09/2006	METHODS AND APPARATUS FOR DECODING A MULTI-CHANNEL AUDIO SIGNAL BASED ON CHANNEL-BASED SIDE INFORMATION	LG ELECTRONICS INC.	27/02/2009	KOLKATA
6	267459	235/KOLNP/2008	28/07/2006	29/07/2005	METHOD FOR SIGNALING OF SPLITTING INFORMATION	LG ELECTRONICS INC.	05/12/2008	KOLKATA
7	267460	1091/KOL/2005	30/11/2005	10/12/2004	IMPROVED PLANT FOR FORMING CERAMIC TILES OR SLABS	SACMI COOPERATIVA MECCANICI IMOLA SOCIETA' COOPERATIVA	27/07/2007	KOLKATA
8	267487	IN/PCT/2002/854/KOL	29/12/2000	30/12/1999	A COMPOSITION COMPRISING AN OIL IN WATER EMULSION AND A METHOD OF MAKING THE SAME	THE REGENTS OF THE UNIVERSITY OF MICHIGAN	17/06/2005	KOLKATA

9	267498	1125/KOLNP/2009	29/08/2007	30/08/2006	PROCESS AND APPARATUS FOR UTILIZING OXYGEN-CONTAINING POLYMERS	PAC HOLDING S.A.	22/05/2009	KOLKATA
10	267499	1249/KOL/2006	20/11/2006	17/01/2006	AN ISOLATED FUEL DELIVERY SYSTEM FOR AN INTERNAL COMBUSTION ENGINE	GM GLOBAL TECHNOLOGY OPERATIONS,INC	03/04/2009	KOLKATA
11	267504	1073/KOLNP/2008	01/08/2006	15/08/2005	ROUTINIG ADVERTISEMENT AUTHENTICATION IN FAST ROUTER DISCOVERY	TELEFONAKTIEBOLAGET LM ERICSSON (PUBL)	19/12/2008	KOLKATA
12	267506	1094/KOL/2005	30/11/2005	10/12/2004	IMPROVED PLANT FOR FORMING CERAMIC TILES OR SLABS	SACMI COOPERATIVA MECCANICI IMOLA SOCIETA ' COOPERATIVA	27/07/2007	KOLKATA
13	267513	1087/KOL/2008	23/06/2008	09/07/2007	MULTI SPEED TRANSMISSION	GM GLOBAL TECHNOLOGY OPERATIONS, INC.	24/04/2009	KOLKATA
14	267516	355/KOL/2007	12/03/2007	29/03/2006	HYBRID POWERTRAIN OPTIMUM RATIO SELECTION	GM GLOBAL TECHNOLOGY OPERATIONS, INC	05/10/2007	KOLKATA
15	267537	1443/KOL/2008	25/08/2008	19/09/2007	METHOD FOR MANAGING TORQUE INPUTS TO AN ELECTRO-MECHANICAL TRANSMISSION TO OPERATE A POWERTRAIN	GM GLOBAL TECHNOLOGY OPERATIONS, INC.	01/05/2009	KOLKATA
16	267542	845/KOL/2006	21/08/2006	23/09/2005	AN EXHAUST TREATMENT DIAGNOSTIC SYSTEM AND A METHOD THEREFOR	GM GLOBAL TECHNOLOGY OPERATIONS, INC.	29/06/2007	KOLKATA
17	267557	1230/KOLNP/2007	06/06/2005	29/10/2004	TAP FOR DISPENSING LIQUIDS FROM VESSELS	VITOP MOULDING, S. R. L.	20/07/2007	KOLKATA
18	267560	2660/KOLNP/2006	22/03/2005	24/03/2004	PROCESS FOR THE PRODUCTION OF TITANIUM DIOXIDE.	BRETON SPA	01/06/2007	KOLKATA
19	267561	119/KOL/2005	21/02/2005		A METHOD OF PRODUCING ULTRAFINE GRAINED STEEL	STEEL AUTHORITY OF INDIA LIMITED	24/11/2006	KOLKATA
20	267562	2625/KOLNP/2007	30/12/2005	26/01/2005	DAMPING DEVICE, PARTICULARLY FOR A DUAL MASS FLYWHEEL	ROHS, ULRICH	31/08/2007	KOLKATA

21	267563	266/KOLNP/2008	20/06/2006	29/06/2005	SEPARABLE CLIMBING SHOE FOR A CLIMBING FORMWORK	PERI GMBH	05/12/2008	KOLKATA
22	267565	563/KOL/2005	28/06/2005		A PROCESS OF MAKING MICRO-ALLOYED LOCOMOTIVE WHEELS WITH HIGHER YS/UTS RATIO	STEEL AUTHORITY OF INDIA LIMITED	29/12/2006	KOLKATA
23	267566	460/KOL/2007	23/03/2007	25/05/2006	METHOD AND APPARATUS TO CONTROL HYDRAULIC PRESSURE IN AN ELECTRO-MECHANICAL TRANSMISSION	GM GLOBAL TECHNOLOGY OPERATIONS, INC	16/05/2008	KOLKATA
24	267567	3082/KOLNP/2008	19/01/2007	19/01/2006	METHOD FOR TRANSMITTING AND RECEIVING TRAFFIC INFORMATION AND APPARATUS THEREOF	LG ELECTRONICS INC.	06/02/2009	KOLKATA
25	267570	3112/KOLNP/2006	08/03/2005	20/04/2004	HEAT EXCHANGER SYSTEM USED IN STEEL MAKING	AMERIFAB, INC	08/06/2007	KOLKATA
26	267575	956/KOLNP/2007	02/09/2005	06/09/2004	METHOD AND DEVICE FOR CASTING MOLTEN METAL	HYDRO ALUMINIUM ALUCAST GMBH	13/07/2007	KOLKATA
27	267578	413/KOL/2007	19/03/2007	12/04/2006	HYBRID POWERTRAIN FOR HOMOGENEOUS CHARGE COMPRESSION IGNITION ENGINE OPERATION	GM GLOBAL TECHNOLOGY OPERATIONS, INC	26/10/2007	KOLKATA
28	267579	410/KOL/2007	19/03/2007	12/04/2006	METHOD OF NET-FORMING AN ARTICLE AND APPARATUS FOR SAME	GM GLOBAL TECHNOLOGY OPERATIONS, INC	26/10/2007	KOLKATA
29	267580	240/KOL/2008	12/02/2008	22/02/2007	MULTI-SPEED TRANSMISSION WITH COUNTERSHAFT GEARING	GM GLOBAL TECHNOLOGY OPERATIONS, INC.	17/04/2009	KOLKATA
30	267581	1428/KOLNP/2007	27/09/2005	27/09/2004	COMPOSITE PIPE AND A METHOD OF MANUFACTURING A COMPOSITE PIPE	AKER KV †RNER SUBSEA AS	20/07/2007	KOLKATA
31	267583	348/KOL/2008	26/02/2008	20/03/2007	A VAPOR FUEL RECOVERY SYSTEM FOR A FUEL TANK	GM GLOBAL TECHNOLOGY OPERATIONS, INC.	17/04/2009	KOLKATA

32	267584	1620/KOL/2008	22/09/2008	23/01/2008	MULTI-INJECTION COMBUSTION CYCLE SYSTEMS FOR SIDI ENGINES	GM GLOBAL TECHNOLOGY OPERATIONS, INC.	31/07/2009	KOLKATA
33	267585	3847/KOLNP/2006	07/07/2005	07/07/2004	SHIFT POINT STRATEGY FOR HYBRID ELECTRIC VEHICLE TRANSMISSION	EATON CORPORATION	22/06/2007	KOLKATA

CONTINUED TO PART- 2

CONTINUED FROM PART- 1

INTRODUCTION

In view of the recent amendment made in the Designs (Amendment) Rules, 2008 with effect from 17/06/2008, Publication of the matter relating to Designs is being published in the Official Journal of The Patent Office. This Journal is being published on weekly basis on every Friday covering the various proceedings on Designs as required according to the provisions of under Rule 22, 25, 27 and 39 of the Design (Amendment) Rules, 2008. All the enquiries on this Official Journal and other information as required by the public should be addressed to the Controller General of Patents, Designs & Trade Marks. Suggestions and comments are requested from all quarters so that the content can be enriched.

THE DESIGNS ACT 2000
(SECTION 30)
DESIGN ASSIGNMENT

The Design stands in the name of KONINKLIJKE PHILIPS ELECTRONICS N.V. registered under the Designs Act, 2000 has been assigned in the Register of Designs in the name as follows:-

Design No.	Class	Name
237784, 238285, 238288, 237787, 237786, 238683, 237850, 237476, 237785, 238286, 238682, 237851, 238287	14-01	WOOX INNOVATIONS BELGIUM NV, A PRIVATE COMPANY WITH LIMITED LIABILITY INCORPORATED UNDER THE LAWS OF BELGIUM WITH ITS CORPORATE SEAT IN ANDERLECHT, BELGIUM AND REGISTERED ADDRESS AT TWEESTATIONSSTRAAT 80, B-1070 ANDERLECHT, BELGIUM

The Design stands in the name of D. LIGHT DESIGN LIMITED registered under the Designs Act, 2000 has been assigned in the Register of Designs in the name as follows:-

Design No.	Class	Name
227604, 233801, 234644	26-05	D.LIGHT DESIGN, INC., A CALIFORNIA CORPORATION HAVING A PLACE OF BUSINESS AT 650 5TH STREET, SUITE 302, SAN FRANCISCO, CA 94107

COPYRIGHT PUBLICATION

SL NO	REGISTERED DESIGN NUMBERS	RENEWED ON
1.	198886	29.06.2015
2.	198887	29.06.2015
3.	198939	23.06.2015
4.	199150	19.06.2015
5.	199153	19.06.2015
6.	199405	22.06.2015
7.	199540	22.06.2015
8.	200510	29.06.2015
9.	200577	22.06.2015
10.	201439	19.06.2015
11.	201485	19.06.2015
12.	201487	19.06.2015
13.	201488	19.06.2015
14.	201537	22.06.2015
15.	201740	22.06.2015

REGISTRATION OF DESIGNS

The following designs have been registered. They are now open for public inspection. In the following each entry the Date of Registration is shown. The Priority Number, Priority Date and Priority Country are also shown

DESIGN NUMBER	268126
CLASS	09-03
1)SATISH CHANDRA GUPTA, PROPRIETOR M/S SHINO & SONS, PLOT NO. 484, BLOCK, S, SITE NO. II, JUHI GADA, KANPUR-208001 (U.P.) INDIA, (INDIAN NATIONAL)	
DATE OF REGISTRATION	11/12/2014
TITLE	CONTAINER
PRIORITY NA	

DESIGN NUMBER	267889
CLASS	13-03
1)LEGRAND FRANCE, 128 AVENUE DU MARÉCHAL DE LATTRE-DE-TASSIGNY, 87000 LIMOGES-FRANCE, A FRENCH COMPANY AND LEGRAND SNC, 128 AVENUE DU MARÉCHAL DE LATTRE DE TASSIGNY, 87000 LIMOGES-FRANCE, A GENERAL PARTNERSHIP FRENCH COMPANY	
DATE OF REGISTRATION	03/12/2014
TITLE	ELECTRIC ACTUATOR

PRIORITY

PRIORITY NUMBER	DATE	COUNTRY
002476747	04/06/2014	OHIM

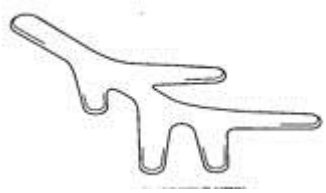

DESIGN NUMBER	269083
CLASS	12-15
1)BRIDGESTONE CORPORATION, A JAPANESE COMPANY ORGANIZED AND EXISTING UNDER THE LAWS OF JAPAN, MANUFACTURES AND MERCHANTS, OF 1-1, KYOBASHI 3-CHOME, CHUO-KU, TOKYO 104-8340, JAPAN	
DATE OF REGISTRATION	28/01/2015
TITLE	TIRE TREAD

PRIORITY

PRIORITY NUMBER	DATE	COUNTRY
JP2014-016373	28/07/2014	JAPAN

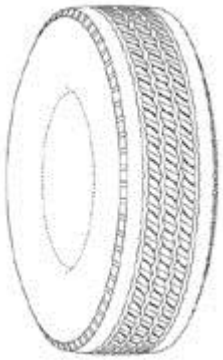

DESIGN NUMBER	267145
CLASS	15-04

1)JOSEPH VÖGELE AG,
JOSEPH-VÖGELE-STRASSE 1, 67067 LUDWIGSHAFEN/RHEIN, GERMANY; NATIONALITY: GERMAN

DATE OF REGISTRATION	31/10/2014
TITLE	BUNKER FOR A ROAD CONSTRUCTION MACHINE

PRIORITY

PRIORITY NUMBER	DATE	COUNTRY
002539254	17/09/2014	OHIM

DESIGN NUMBER	267185
CLASS	12-16

1)JOSEPH VÖGELE AG,
JOSEPH-VÖGELE-STRASSE 1, 67067 LUDWIGSHAFEN/RHEIN, GERMANY; NATIONALITY: GERMANY

DATE OF REGISTRATION	03/11/2014
TITLE	SIDE PANEL FOR VEHICLE

PRIORITY

PRIORITY NUMBER	DATE	COUNTRY
002539254	17/09/2014	EUROPEAN UNION

DESIGN NUMBER	265243
CLASS	05-05

1)M/S. NAKSHATRA CREATIONS PVT. LTD., OF PLOT NO 5511,
ROAD NO 55, G.I.D.C., SACHIN, DIST. SURAT-394230 SURAT (GUJARAT) INDIA, AND A COMPANY REGISTERED UNDER THE COMPANY ACT SITUATED AT ABOVE ADDRESS

DATE OF REGISTRATION	28/08/2014
TITLE	TEXTILE FABRIC

PRIORITY NA

DESIGN NUMBER	266141
CLASS	12-11
1)EIDER MOTORS LIMITED, WHOSE ADDRESS 8-2-293/82/A/796-B, 4TH FLOOR, ROAD #36, JUBILEE HILLS, HYDERABAD-500033, TELANGANA, INDIA, AND WHOSE NATIONALITY IS INDIA	
DATE OF REGISTRATION	29/09/2014
TITLE	MOTOR SCOOTER
PRIORITY NA	

DESIGN NUMBER	266691
CLASS	14-02
1)BROADCAST AUDIENCE RESEARCH COUNCIL,. ROSE COTTAGE, NEXT TO CITI TOWER, 61 DR. S. S. RAO ROAD, PAREL (EAST), MUMBAI 400012, MAHARASHTRA, INDIA; AN INDIAN COMPANY	
DATE OF REGISTRATION	13/10/2014
TITLE	METER FOR TELEVISION RATING POINT
PRIORITY NA	

DESIGN NUMBER	267166
CLASS	15-04
1)JOSEPH VÖGELE AG, JOSEPH-VÖGELE-STRASSE 1, 67067 LUDWIGSHAFEN/RHEIN, GERMANY; NATIONALITY: GERMANY	
DATE OF REGISTRATION	03/11/2014
TITLE	ROAD CONSTRUCTION MACHINE
PRIORITY	

PRIORITY NUMBER	DATE	COUNTRY
002539254	17/09/2014	OHIM

DESIGN NUMBER	266592	
CLASS	08-07	
1)(1) RUPESHBHAI MANSUKHBHAI MANSARA (2) JAYESHBHAI GOBARBHAI SHEKHLIYA (3) CHETANBHAI LAVJIBHAI SINGHALA (ALL THE PARTNERS ARE ADULT AND INDIAN NATIONALS) PARTNERS OF JAY SOMNATH METAL (INDIAN PARTNERSHIP FIRM) HAVING PLACE OF BUSINESS AT-3, MARUTI INDUSTRIAL AREA, KOTHARIA RING ROAD, B/S. MURLIDHAR WAYBRIDGE, N H NO. 8 B, RAJKOT-360003-GUJARAT,- (INDIA)		
DATE OF REGISTRATION	10/10/2014	
TITLE	DOOR LATCH	
PRIORITY NA		
DESIGN NUMBER	267760	
CLASS	13-03	
1)M/S GM MODULAR PVT. LTD., (A COMPANY INCORPORATED UNDER INDIAN COMPANIES ACT), 14/15, BOKADIA IND. ESTATE, SATIVALI ROAD, VASAI (EAST)-401208, DISTRICT-THANE, MAHARASHTRA (INDIA)		
DATE OF REGISTRATION	27/11/2014	
TITLE	SWITCH PLATE	
PRIORITY NA		
DESIGN NUMBER	266719	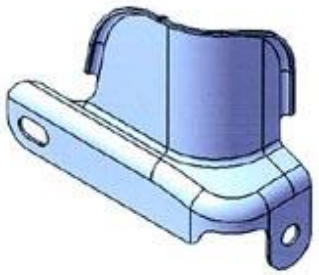
CLASS	12-16	
1)TATA MOTORS LIMITED, AN INDIAN COMPANY OF BOMBAY HOUSE, 24 HOMI MODY STREET, HUTATMA CHOWK, MUMBAI 400001, MAHARASHTRA, INDIA		
DATE OF REGISTRATION	15/10/2014	
TITLE	VEHICLE SPEED SENSOR HEAT SHIELD	
PRIORITY NA		

DESIGN NUMBER	261394
CLASS	26-01
1)M/S. TLV PACKAGING SOLUTIONS PRIVATE LIMITED AN INDIAN COMPANY HAVING REGISTERED ADDRESS AT 202, YOLEE BUILDING, NO. 14, POTTERY ROAD, RICHARDS TOWN, BANGALORE-560 005, INDIA	
DATE OF REGISTRATION	31/03/2014
TITLE	CANDLE HOLDER
PRIORITY NA	

DESIGN NUMBER	267177
CLASS	12-16
1)JOSEPH VÖGELE AG, JOSEPH-VÖGELE-STRASSE 1, 67067 LUDWIGSHAFEN/RHEIN, GERMANY; NATIONALITY: GERMANY	
DATE OF REGISTRATION	03/11/2014
TITLE	CONTROL PANEL FOR A VEHICLE

PRIORITY

PRIORITY NUMBER	DATE	COUNTRY
002539254	17/09/2014	OHIM

DESIGN NUMBER	268624
CLASS	13-03
1)ABB TECHNOLOGY AG, A SWISS COMPANY OF AFFOLTERNSTRASSE 44, 8050 ZÜRICH, SWITZERLAND	
DATE OF REGISTRATION	02/01/2015
TITLE	MODULAR INVERTER ASSEMBLY CASE

PRIORITY

PRIORITY NUMBER	DATE	COUNTRY
002496679	04/07/2014	OHIM

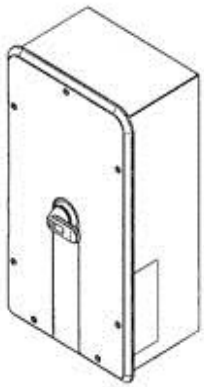

DESIGN NUMBER	267155
CLASS	12-16
1)JOSEPH VÖGELE AG, JOSEPH-VÖGELE-STRASSE 1, 67067 LUDWIGSHAFEN/RHEIN, GERMANY; NATIONALITY: GERMAN	
DATE OF REGISTRATION	31/10/2014
TITLE	SIDE PANEL FOR VEHICLE

PRIORITY

PRIORITY NUMBER	DATE	COUNTRY
002539254	17/09/2014	OHIM

DESIGN NUMBER	212300
CLASS	24-03
1)OTTO BOCK HEALTHCARE PRODUCTS GMBH., OF KAISERSTRASSE 39, 1070 WIEN, AUSTRIA, AN AUSTRIAN COMPANY	
DATE OF REGISTRATION	10/09/2007
TITLE	PROSTHESIS

PRIORITY NA

DESIGN NUMBER	265116
CLASS	26-04
1)M/S SHREE SANT KRIPA INTELLECTUAL, HAVING OFFICE AT 7, AKSHAY COMPLEX, OFF. DHOLE PATIL ROAD, PUNE-411001, MAHARASHTRA, INDIA, AN INDIAN	
DATE OF REGISTRATION	26/08/2014
TITLE	BULBS FOR ELECTRIC LAMPS

PRIORITY NA

DESIGN NUMBER	268742
CLASS	28-03
1)UDIT AGARWAL, AN INDIAN CITIZEN, C/O GANGA SANITARY STORE, STATION ROAD, MORADABAD-244001, UP, INDIA	
DATE OF REGISTRATION	09/01/2015
TITLE	TOOTHBRUSH HOLDER
PRIORITY NA	

DESIGN NUMBER	267157
CLASS	12-16
1)JOSEPH VÖGELE AG, JOSEPH-VÖGELE-STRASSE 1, 67067 LUDWIGSHAFEN/RHEIN, GERMANY	
DATE OF REGISTRATION	31/10/2014
TITLE	SIDE PANEL FOR VEHICLE

PRIORITY

PRIORITY NUMBER	DATE	COUNTRY
002539254	17/09/2014	OHIM

DESIGN NUMBER	212302
CLASS	24-03
1)OTTO BOCK HEALTHCARE PRODUCTS GMBH., OF KAISERSTRASSE 39, 1070 WIEN, AUSTRIA, AN AUSTRIAN COMPANY	
DATE OF REGISTRATION	10/09/2007
TITLE	PROSTHESIS
PRIORITY NA	

DESIGN NUMBER	200492
CLASS	07-02
1)JOSE THAIKATTIL, THAIKATTIL HOUSE, TIRURANGADI P.O., KERALA STATE, INDIA, AND INDIAN NATIONAL,	
DATE OF REGISTRATION	26/07/2005
TITLE	UTENSIL
PRIORITY NA	

DESIGN NUMBER	268152
CLASS	12-11
1)KINETIC GREEN ENERGY AND POWER SOLUTIONS LIMITED, A COMPANY INCORPORATED UNDER THE INDIAN COMPANIES ACT, AT KINETIC INNOVATIONS PARK, D-1 BLOCK, PLOT NO. 18/2, MIDC, CHINCHWAD, PUNE-411 019, MAHARASHTRA, INDIA.	
DATE OF REGISTRATION	12/12/2014
TITLE	THREE WHEELER VEHICLE
PRIORITY NA	

DESIGN NUMBER	258751
CLASS	14-03
1)NOKIA CORPORATION, A FINNISH CORPORATION, OF THE ADDRESS KEILALAHDENTIE 4, ESPOO, FINLAND 02150	
DATE OF REGISTRATION	16/12/2013
TITLE	MOBILE PHONE

PRIORITY

PRIORITY NUMBER	DATE	COUNTRY
29/459572	01/07/2013	U.S.A.

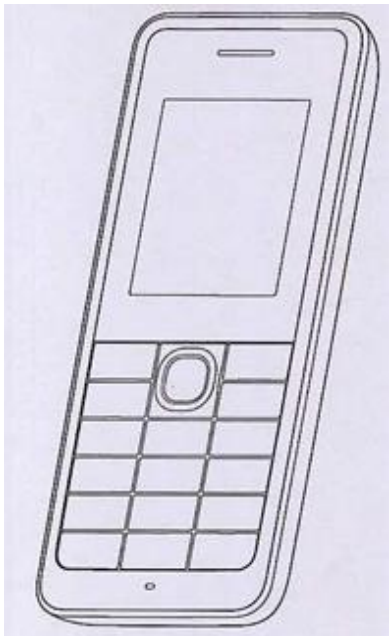

DESIGN NUMBER	267265
CLASS	31-00

1)WHIRLPOOL S.A., A BRAZILIAN COMPANY,
OF AVENIDA DAS NACOES UNIDAS, 12.995-32° ANDAR, BROOKLIN NOVO-04578-000-SAO PAULO-SP-BRAZIL

DATE OF REGISTRATION	07/11/2014
TITLE	BEVERAGE EQUIPMENT

PRIORITY

PRIORITY NUMBER	DATE	COUNTRY
BR 30 2014 002025 0	07/05/2014	BRAZIL

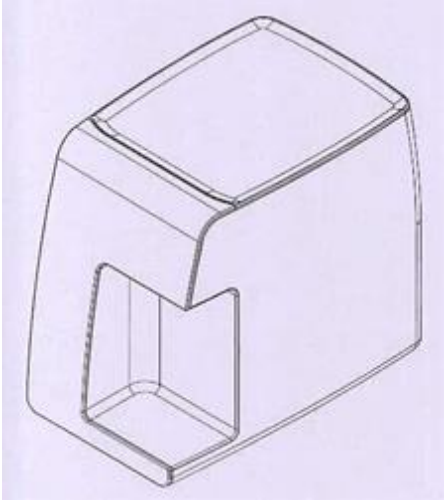

DESIGN NUMBER	267153
CLASS	12-16

1)JOSEPH VÖGELE AG,
JOSEPH-VÖGELE-STRASSE 1, 67067 LUDWIGSHAFEN/RHEIN, GERMANY; NATIONALITY: GERMAN

DATE OF REGISTRATION	31/10/2014
TITLE	SIDE PANEL FOR A VEHICLE

PRIORITY

PRIORITY NUMBER	DATE	COUNTRY
002539254	17/09/2014	OHIM

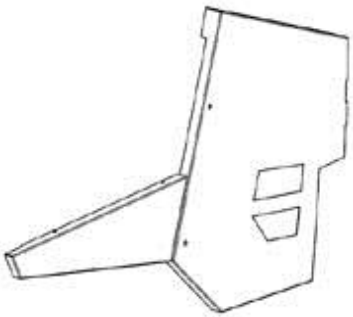

DESIGN NUMBER	212298
CLASS	24-03

1)OTTO BOCK HEALTHCARE PRODUCTS GMBH.,
OF KAISERSTRASSE 39, 1070 WIEN, AUSTRIA, AN AUSTRIAN COMPANY

DATE OF REGISTRATION	10/09/2007
TITLE	PROSTHESIS

PRIORITY NA

DESIGN NUMBER	257553
CLASS	14-03

1)NOKIA CORPORATION, A FINNISH CORPORATION, OF THE ADDRESS
KEILALAHDENTIE 4, ESPOO, FINLAND 02150

DATE OF REGISTRATION	17/10/2013
TITLE	MOBILE PHONE

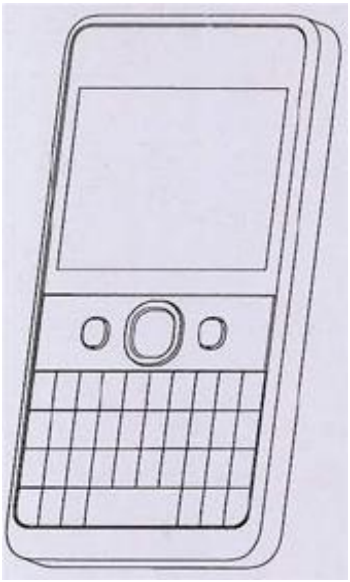

PRIORITY

PRIORITY NUMBER	DATE	COUNTRY
29/452863	22/04/2013	U.S.A.

DESIGN NUMBER	266589
CLASS	08-07

1)(1) RUPESHBHAI MANSUKHBHAI MANSARA (2) JAYESHBHAI GOBARBHAI SHEKHLIYA (3) CHETANBHAI LAVJIBHAI SINGHALA (ALL THE PARTNERS ARE ADULT AND INDIAN NATIONALS) PARTNERS OF JAY SOMNATH METAL (INDIAN PARTNERSHIP FIRM)
HAVING PLACE OF BUSINESS AT-3, MARUTI INDUSTRIAL AREA, KOTHARIA RING ROAD, B/S. MURLIDHAR WAYBRIDGE, N H NO. 8 B, RAJKOT-360 003-GUJARAT,- (INDIA)

DATE OF REGISTRATION	10/10/2014
TITLE	DOOR LATCH

PRIORITY NA

DESIGN NUMBER	267757
CLASS	13-03

1)M/S GM MODULAR PVT. LTD., (A COMPANY INCORPORATED UNDER INDIAN COMPANIES ACT),
14/15, BOKADIA IND. ESTATE, SATIVALI ROAD, VASAI (EAST)-401208, DISTRICT-THANE, MAHARASHTRA (INDIA)

DATE OF REGISTRATION	27/11/2014
TITLE	SWITCH PLATE

PRIORITY NA

DESIGN NUMBER	266715
CLASS	15-04
1)HARNISCHFEGER TECHNOLOGIES, INC., A COMPANY ORGANIZED UNDER THE LAWS OF THE UNITED STATES OF AMERICA, OF 2751 CENTERVILLE ROAD, SUITE 342, WILMINGTON, DELAWARE 19808, UNITED STATES OF AMERICA	
DATE OF REGISTRATION	15/10/2014
TITLE	CRAWLER TRACK SHOE FOR A CHAIN MOVEMENT ASSEMBLY

PRIORITY

PRIORITY NUMBER	DATE	COUNTRY
29/491,637	22/05/2014	U.S.A.

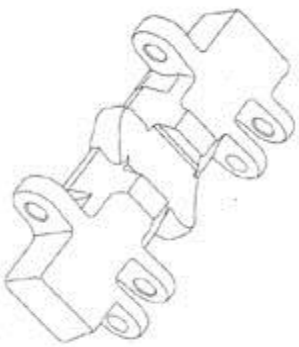

DESIGN NUMBER	266923
CLASS	13-03
1)M/S GM MODULAR PVT. LTD., (A COMPANY INCORPORATED UNDER INDIAN COMPANIES ACT), 14/15, BOKADIA IND. ESTATE, SATIVALI ROAD, VASAI (EAST)-401208, DISTRICT-THANE, MAHARASHTRA (INDIA)	
DATE OF REGISTRATION	27/10/2014
TITLE	WIFI SWITCH
PRIORITY NA	

DESIGN NUMBER	268525
CLASS	15-01
1)JASHWANTLAL P. PANCHAL, INDIVIDUAL, AN INDIAN NATIONAL, PROPRIETOR OF PANCHAL MACHINERY, HAVING ITS OFFICE AT 13, AJAY INDUSTRIAL ESTATE, NEAR WATER TANK, DUDHESHWAR ROAD, DUDHESHWAR, AHMEDABAD-380 004. GUJARAT. INDIA.	
DATE OF REGISTRATION	31/12/2014
TITLE	TWIN SHAFT EXTRUDER GEAR BOX
PRIORITY NA	

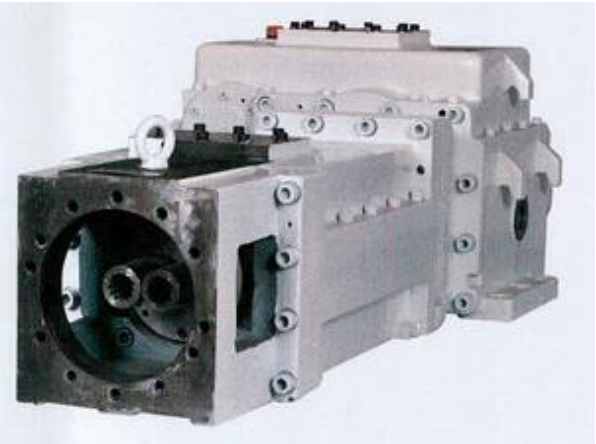

DESIGN NUMBER	269373
CLASS	13-02
1)TATA MOTORS LIMITED, AN INDIAN COMPANY OF BOMBAY HOUSE, 24 HOMI MODY STREET, HUTATMA CHOWK, MUMBAI 400 001, MAHARASHTRA, INDIA	
DATE OF REGISTRATION	06/02/2015
TITLE	EYE TERMINAL FOR BATTERY MOUNTED FUSE BOX
PRIORITY NA	

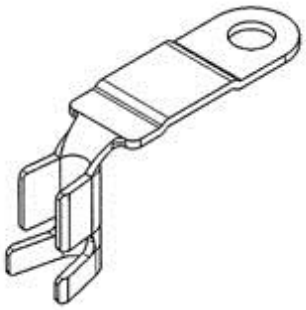

DESIGN NUMBER	267174
CLASS	15-04
1)JOSEPH VÖGELE AG, JOSEPH-VÖGELE-STRASSE 1, 67067 LUDWIGSHAFEN/RHEIN, GERMANY; NATIONALITY: GERMANY	
DATE OF REGISTRATION	03/11/2014
TITLE	ROAD CONSTRUCTION MACHINE
PRIORITY	

PRIORITY NUMBER	DATE	COUNTRY
002539254	17/09/2014	EUROPEAN UNION

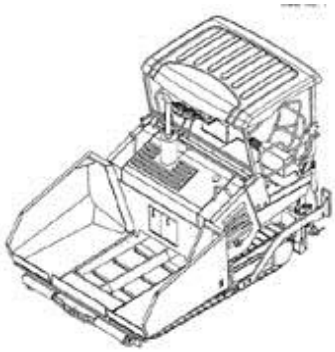

DESIGN NUMBER	200675
CLASS	02-02
1)KAIZAR MITHAIWALA AND RADHIKA NAIK, AT NO. 6 SEA VIEW TERRACE, 68-71 WODEHOUSE ROAD, COLABA, MUMBAI-400 005, MAHARASHTRA, INDIA,	
DATE OF REGISTRATION	04/08/2005
TITLE	DRESS
PRIORITY NA	

DESIGN NUMBER	258603
CLASS	14-03

1)NOKIA CORPORATION, A FINNISH CORPORATION, OF THE ADDRESS
KEILALAHDENTIE 4, ESPOO, FINLAND 02150

DATE OF REGISTRATION	06/12/2013
TITLE	MOBILE PHONE

PRIORITY

PRIORITY NUMBER	DATE	COUNTRY
29/457554	11/06/2013	U.S.A.

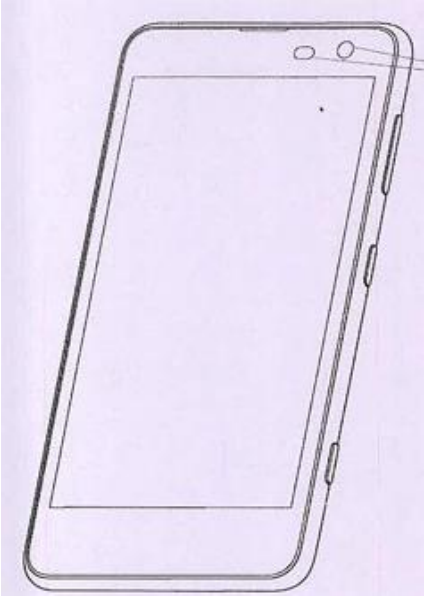

DESIGN NUMBER	268124
CLASS	07-02

1)HAUSER LIFE STYLE PRODUCTS, AN INDIAN PARTNERSHIP FIRM OF 63, B/C, GOVT. INDUSTRIAL ESTATE, CHARKOP, KANDIVALI (W), MUMBAI-400067. [MAHARASHTRA] INDIA;
WHOSE PARTNERS ARE MOHIT KHUBILAL RATHOD, SUMIT VIMALCHAND RATHOD, ARVIND VIMALCHAND SHAH AND SMT. JYOTI SUNIT SINGHI ALL INDIANS OF THE ABOVE ADDRESS

DATE OF REGISTRATION	11/12/2014
TITLE	CASSEROLE

PRIORITY NA

DESIGN NUMBER	268218
CLASS	12-12

1)STOKKE AS, A NORWEGIAN COMPANY OF
PARKGATA 6, N-6003 ÅLESUND, NORWAY

DATE OF REGISTRATION	16/12/2014
TITLE	STROLLER

PRIORITY

PRIORITY NUMBER	DATE	COUNTRY
20140635	30/06/2014	NORWAY

DESIGN NUMBER	204800
CLASS	23-01

1)NEOPERL GMBH
OF KLOSTERRUNSSTRASSE 9-11, 79379 MULLHEIM, GERMANY, A GERMAN COMPANY

DATE OF REGISTRATION	21/12/2005
TITLE	AERATOR FOR FAUCETS

PRIORITY

PRIORITY NUMBER	DATE	COUNTRY
452594	21/12/2005	OHIM

DESIGN NUMBER	267765
CLASS	13-03

1)M/S GM MODULAR PVT. LTD., (A COMPANY INCORPORATED UNDER INDIAN COMPANIES ACT),
14/15, BOKADIA IND. ESTATE, SATIVALI ROAD, VASAI (EAST)-401208, DISTRICT-THANE, MAHARASHTRA (INDIA)

DATE OF REGISTRATION	27/11/2014
TITLE	SWITCH PLATE

PRIORITY NA

DESIGN NUMBER	267144
CLASS	12-16

1)JOSEPH VÖGELE AG,
JOSEPH-VÖGELE-STRASSE 1, 67067 LUDWIGSHAFEN/RHEIN, GERMANY; NATIONALITY: GERMAN

DATE OF REGISTRATION	31/10/2014
TITLE	SIDE PANEL FOR VEHICLE

PRIORITY

PRIORITY NUMBER	DATE	COUNTRY
002539254	17/09/2014	OHIM

DESIGN NUMBER	268141
CLASS	22-06
1)HI-TECH NATURAL PRODUCTS (INDIA) LTD., (A PUBLIC LIMITED COMPANY REGISTERED AND INCORPORATED IN INDIA UNDER THE PROVISIONS OF THE COMPANIES ACT, 1956) HAVING ITS REGISTERED OFFICE AT 205, JAWAHAR GALI, FARSH BAZAR, SHAHDARA, DELHI-110032, INDIA.	
DATE OF REGISTRATION	11/12/2014
TITLE	HONEY BEE EXCLUDER
PRIORITY NA	

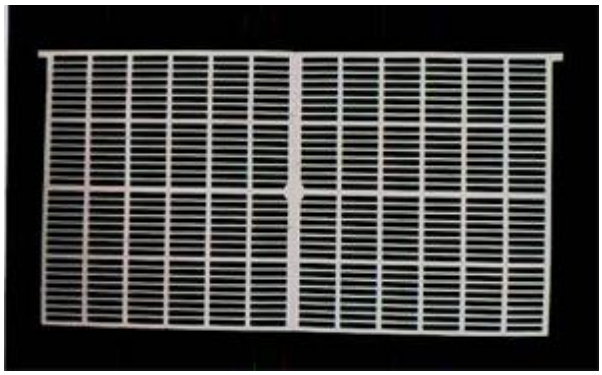

DESIGN NUMBER	268223
CLASS	23-04
1)M/S. ORIENT ELECTRIC (A DIVISION OF ORIENT PAPER & INDUSTRIES LTD.), 11, INDUSTRIAL ESTATE, SECTOR-6, FARIDABAD-121006, HARYANA	
DATE OF REGISTRATION	16/12/2014
TITLE	CEILING FAN
PRIORITY NA	

DESIGN NUMBER	251049
CLASS	09-01
1)MR. IFTEKHAR AHMED., AN INDIAN CITIZEN, AT 204, S. C. M. ROAD, BHANGAGARA, JORA ASTHATALA, P.O. BHAIDYABATI, DIST. HOOGHLY, PIN-712222, STATE OF WEST BENGAL, INDIA	
DATE OF REGISTRATION	21/01/2013
TITLE	BOTTLE
PRIORITY NA	

DESIGN NUMBER	269619
CLASS	23-04
1)GODREJ & BOYCE MFG. CO. LTD., AN INDIAN COMPANY INCORPORATED UNDER THE COMPANIES ACT, 1913, OF GODREJ APPLIANCE, PLANT 11, PIROJSHANAGER, VIKHROLI (WEST), MUMBAI-400079, INDIA	
DATE OF REGISTRATION	13/02/2015
TITLE	AIR CONDITIONER
PRIORITY NA	

DESIGN NUMBER	267149
CLASS	12-16
1)JOSEPH VÖGELE AG, JOSEPH-VÖGELE-STRASSE 1, 67067 LUDWIGSHAFEN/RHEIN, GERMANY; NATIONALITY: GERMAN	
DATE OF REGISTRATION	31/10/2014
TITLE	SIDE PANEL FOR A VEHICLE
PRIORITY	

PRIORITY NUMBER	DATE	COUNTRY
002539254	17/09/2014	OHIM

DESIGN NUMBER	267188
CLASS	12-16
1)JOSEPH VÖGELE AG, JOSEPH-VÖGELE-STRASSE 1, 67067 LUDWIGSHAFEN/RHEIN, GERMANY; NATIONALITY: GERMAN	
DATE OF REGISTRATION	03/11/2014
TITLE	SIDE PANEL FOR VEHICLE
PRIORITY	

PRIORITY NUMBER	DATE	COUNTRY
002539254	17/09/2014	EUROPEAN UNION

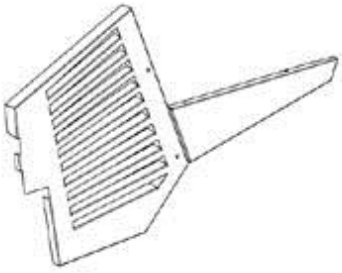

DESIGN NUMBER	256116
CLASS	20-02
1)SATISH CHAND JAIN, SOLE PROPRIETOR OF EDUCOMP AIDS (INDIA) WHOSE ADDRESS IS 10149, EAST PARK ROAD, NEAR FILMISTAN CINEMA, KAROL BAGH, NEW DELHI-110005, INDIA AN INDIAN NATIONAL OF ABOVE ADDRESS	
DATE OF REGISTRATION	30/08/2013
TITLE	DISPLAY CUM TRAINING KIT
PRIORITY NA	

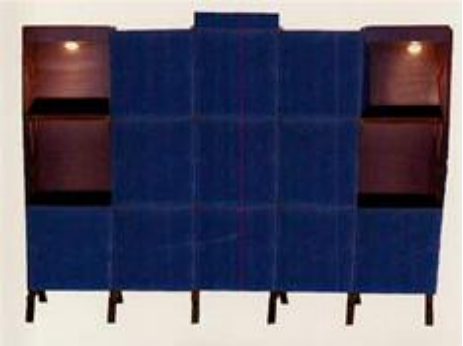

DESIGN NUMBER	200085
CLASS	23-01
1)B.G.RAGHAVENDRA RAO; ADDRESS AND NATIONALITY NO.1316/A, HARISH, 3RD CROSS, BETWEEN 7TH & 8TH MAIN, RAJAJI NAGAR II STAGE, A BLOCK, BANGALORE-560010, KARNATAKA: INDIAN	
DATE OF REGISTRATION	17/06/2005
TITLE	GAS SAVER AND SAFETY DEVICE
PRIORITY NA	

DESIGN NUMBER	265128
CLASS	26-03
1)M/S SHREE SANT KRIPA INTELLECTUAL, HAVING OFFICE AT 7, AKSHAY COMPLEX, OFF. DHOLE PATIL ROAD, PUNE-411001, MAHARASHTRA, INDIA.	
DATE OF REGISTRATION	26/08/2014
TITLE	CEILING LIGHT FIXTURE
PRIORITY NA	

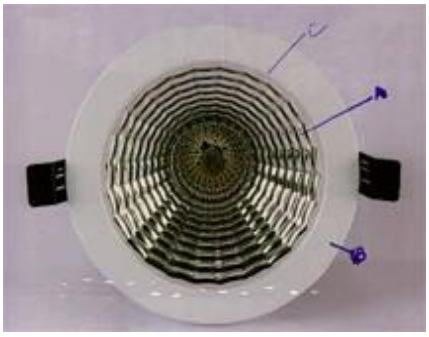

DESIGN NUMBER	265995
CLASS	09-03

1)SOREMARTEC S.A., A LUXEMBOURGIAN JOINT STOCK COMPANY OF
FINDEL BUSINESS CENTER, COMPLEXE B, RUE DE TREVES, L-2632 FINDEL (LUXEMBOURG)

DATE OF REGISTRATION	24/09/2014
TITLE	BOX

PRIORITY

PRIORITY NUMBER	DATE	COUNTRY
803347501	28/03/2014	WIPO

DESIGN NUMBER	212303
CLASS	24-03

1)OTTO BOCK HEALTHCARE PRODUCTS GMBH.,
OF KAISERSTRASSE 39, 1070 WIEN, AUSTRIA, AN AUSTRIAN COMPANY

DATE OF REGISTRATION	10/09/2007
TITLE	PROSTHESIS

PRIORITY NA

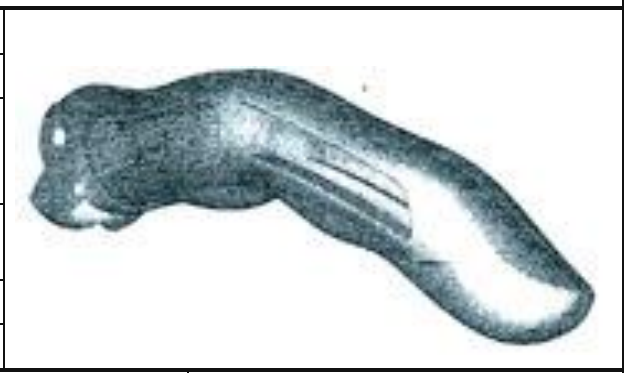

DESIGN NUMBER	268092
CLASS	23-02

1)RECKITT BENCKISER LLC, A LIMITED LIABILITY COMPANY INCORPORATED IN THE STATE OF DELAWARE, U.S.A. OF
MORRIS CORPORATE CENTER IV, 399 INTERPACE PARKWAY, PARSIPPANY, NEW JERSEY 07054, UNITED STATES OF AMERICA

DATE OF REGISTRATION	09/12/2014
TITLE	LAVATORY DISPENSING DEVICE WITH HANGER

PRIORITY

PRIORITY NUMBER	DATE	COUNTRY
002483305-0001	16/06/2014	OHIM

DESIGN NUMBER	268204	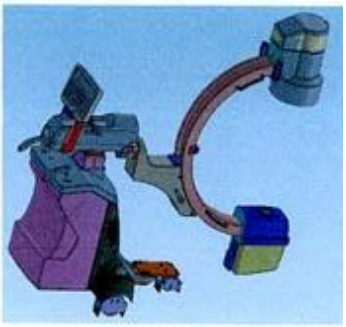
CLASS	24-01	
1)SKANRAY TECHNOLOGIES PVT. LTD., AN INDIAN COMPANY INCORPORATED UNDER THE COMPANIES ACT, 1956 OF PLOT # 15-17, HEBBAL INDUSTRIAL AREA, MYSORE-570016, STATE OF KARNATAKA, INDIA		
DATE OF REGISTRATION	15/12/2014	
TITLE	MOBILE RADIOGRAPHY IMAGING APPARATUS	
PRIORITY NA		

DESIGN NUMBER	267762	
CLASS	13-03	
1)M/S GM MODULAR PVT. LTD., (A COMPANY INCORPORATED UNDER INDIAN COMPANIES ACT), 14/15, BOKADIA IND. ESTATE, SATIVALI ROAD, VASAI (EAST)-401208, DISTRICT-THANE, MAHARASHTRA (INDIA)		
DATE OF REGISTRATION	27/11/2014	
TITLE	SWITCH PLATE	
PRIORITY NA		

DESIGN NUMBER	268667	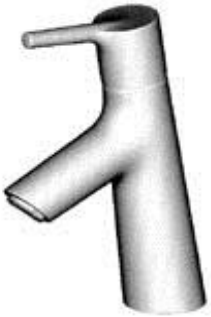
CLASS	23-01	
1)HANSGROHE SE, OF AUESTR. 5-9, D-77761 SCHILTACH, GERMANY, A GERMAN COMPANY		
DATE OF REGISTRATION	06/01/2015	
TITLE	SANITARY FAUCET	

PRIORITY

PRIORITY NUMBER	DATE	COUNTRY
002505248-0002	18/07/2014	OHIM

DESIGN NUMBER	261547
CLASS	31-00
1)GROUPE SEB INDIA PRIVATE LIMITED, A-25, FIRST FLOOR, MOHAN CO-OPERATIVE INDUSTRIAL AREA, NEW DELHI-110 044, DELHI, INDIA	
DATE OF REGISTRATION	04/04/2014
TITLE	BASE OF MIXER GRINDER
PRIORITY NA	

DESIGN NUMBER	267077
CLASS	15-03
1)SATAKE CORPORATION, A JAPANESE COMPANY OF 7-2, SOTOKANDA 4-CHOME, CHIYODA-KU, TOKYO, 101-0021, JAPAN	
DATE OF REGISTRATION	29/10/2014
TITLE	BELT TYPE OPTICAL GRANULAR MATERIAL SORTER

PRIORITY

PRIORITY NUMBER	DATE	COUNTRY
2014-009951	09/05/2014	JAPAN

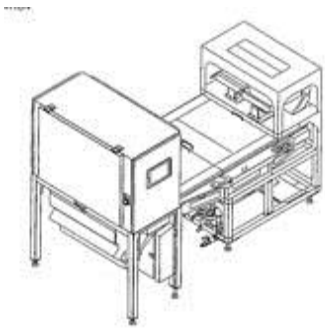

DESIGN NUMBER	267181
CLASS	15-04
1)JOSEPH VÖGELE AG, JOSEPH-VÖGELE-STRASSE 1, 67067 LUDWIGSHAFEN/RHEIN, GERMANY; NATIONALITY: GERMANY	
DATE OF REGISTRATION	03/11/2014
TITLE	ROAD CONSTRUCTION MACHINE

PRIORITY

PRIORITY NUMBER	DATE	COUNTRY
002539254	17/09/2014	OHIM

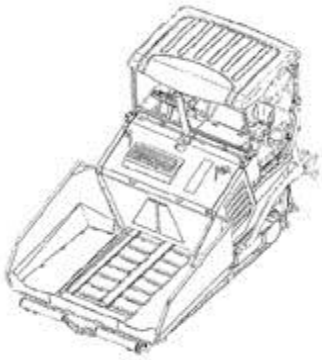

DESIGN NUMBER	268123
CLASS	07-99
1)HAUSER LIFE STYLE PRODUCTS, AN INDIAN PARTNERSHIP FIRM OF 63, B/C, GOVT. INDUSTRIAL ESTATE, CHARKOP, KANDIVALI (W), MUMBAI-400067. [MAHARASHTRA] INDIA; WHOSE PARTNERS ARE MOHIT KHUBILAL RATHOD, SUMIT VIMALCHAND RATHOD, ARVIND VIMALCHAND SHAH AND SMT. JYOTI SUNIT SINGHI ALL INDIANS OF THE ABOVE ADDRESS	
DATE OF REGISTRATION	11/12/2014
TITLE	SERVING TRAY
PRIORITY NA	

DESIGN NUMBER	268213
CLASS	09-03
1)I MR. FAN. XIAOXI, HAVING OUR OFFICE AT NO. 9, # 5, NAN TI ROAD, XIAOLAN, ZHONGSHAN, GUANGDONG, CHINA	
DATE OF REGISTRATION	15/12/2014
TITLE	PACKAGING BOX
PRIORITY NA	

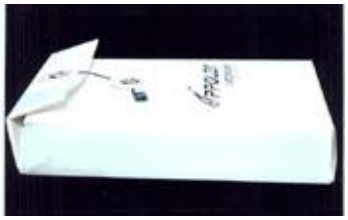

DESIGN NUMBER	267764
CLASS	13-03
1)M/S GM MODULAR PVT. LTD., (A COMPANY INCORPORATED UNDER INDIAN COMPANIES ACT), 14/15, BOKADIA IND. ESTATE, SATIVALI ROAD, VASAI (EAST)-401208, DISTRICT-THANE, MAHARASHTRA (INDIA)	
DATE OF REGISTRATION	27/11/2014
TITLE	SWITCH PLATE
PRIORITY NA	

DESIGN NUMBER	268448
CLASS	25-01
1)M. MANICKAM, PROPRIETOR OF M/S. M. M. K. HALLOW BLOCK AT S.F. NO. 402/1, PUDHUPALAYAM, NACHIPALAYAM (POST), VIJAYAPURAM (VIA), KANGAYAM MAIN ROAD, TIRUPUR-641606, INDIA, INDIAN-NATIONAL OF ABOVE ADDRESS	
DATE OF REGISTRATION	26/12/2014
TITLE	HOLLOW BRICK
PRIORITY NA	

DESIGN NUMBER	267143
CLASS	12-16
1)JOSEPH VÖGELE AG, JOSEPH-VÖGELE-STRASSE 1, 67067 LUDWIGSHAFEN/RHEIN, GERMANY; NATIONALITY: GERMAN	
DATE OF REGISTRATION	31/10/2014
TITLE	SIDE PANEL FOR VEHICLE

PRIORITY

PRIORITY NUMBER	DATE	COUNTRY
002539254	17/09/2014	EUROPEAN UNION

DESIGN NUMBER	261550
CLASS	07-05
1)GROUPE SEB INDIA PRIVATE LIMITED, A-25, FIRST FLOOR, MOHAN CO-OPERATIVE INDUSTRIAL AREA, NEW DELHI-110 044, DELHI, INDIA	
DATE OF REGISTRATION	04/04/2014
TITLE	DRY IRON
PRIORITY NA	

DESIGN NUMBER	268120
CLASS	07-01
1)CLAYTON SEQUEIRA SOLE PROPRIETOR OF WOODTRIM WHOSE ADDRESS IS TOK PADA, NEAR GIRIZ TALAV, GIRIZ, VASAI ROAD (WEST), DIST THANE 401201, MAHARASHTRA, INDIA, INDIAN NATIONAL	
DATE OF REGISTRATION	11/12/2014
TITLE	MUG
PRIORITY NA	

DESIGN NUMBER	267763
CLASS	13-03
1)M/S GM MODULAR PVT. LTD., (A COMPANY INCORPORATED UNDER INDIAN COMPANIES ACT), 14/15, BOKADIA IND. ESTATE, SATIVALI ROAD, VASAI (EAST)-401208, DISTRICT-THANE, MAHARASHTRA (INDIA)	
DATE OF REGISTRATION	27/11/2014
TITLE	SWITCH PLATE
PRIORITY NA	

DESIGN NUMBER	267142
CLASS	12-16
1)JOSEPH VÖGELE AG, JOSEPH-VÖGELE-STRASSE 1, 67067 LUDWIGSHAFEN/RHEIN, GERMANY; NATIONALITY: GERMAN	
DATE OF REGISTRATION	31/10/2014
TITLE	SIDE PANEL FOR A VEHICLE

PRIORITY

PRIORITY NUMBER	DATE	COUNTRY
002539254	17/09/2014	EUROPEAN UNION

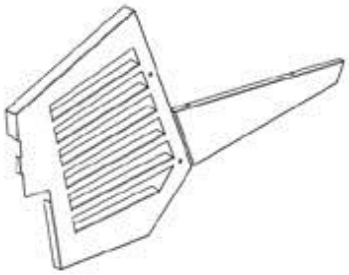

DESIGN NUMBER	267182
CLASS	12-16
1)JOSEPH VÖGELE AG, JOSEPH-VÖGELE-STRASSE 1, 67067 LUDWIGSHAFEN/RHEIN, GERMANY; NATIONALITY: GERMANY	
DATE OF REGISTRATION	03/11/2014
TITLE	SIDE PANEL FOR A VEHICLE
PRIORITY	

PRIORITY NUMBER	DATE	COUNTRY
002539254	17/09/2014	OHIM

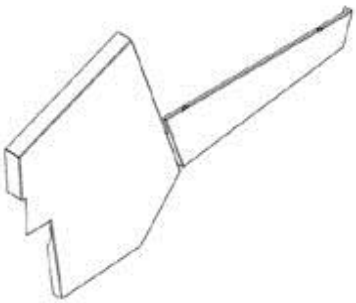

DESIGN NUMBER	261548
CLASS	07-02
1)GROUPE SEB INDIA PRIVATE LIMITED, A-25, FIRST FLOOR, MOHAN CO-OPERATIVE INDUSTRIAL AREA, NEW DELHI-110 044, DELHI, INDIA	
DATE OF REGISTRATION	04/04/2014
TITLE	COOKER
PRIORITY NA	

DESIGN NUMBER	268090
CLASS	31-00
1)M/S BLUE MOUNT APPLIANCES PVT. LTD., (A COMPANY INCORPORATED UNDER THE INDIAN COMPANIES ACT, 1956) HAVING ITS OFFICE AT B-96, PUSHPANJALI ENCLAVE, PITAM PURA, OUTER RING ROAD, NEW DELHI-110034, AN INDIAN COMPANY	
DATE OF REGISTRATION	09/12/2014
TITLE	WATER PURIFIER
PRIORITY NA	

DESIGN NUMBER	267761	
CLASS	13-03	
1)M/S GM MODULAR PVT. LTD., (A COMPANY INCORPORATED UNDER INDIAN COMPANIES ACT), 14/15, BOKADIA IND. ESTATE, SATIVALI ROAD, VASAI (EAST)-401208, DISTRICT-THANE, MAHARASHTRA (INDIA)		
DATE OF REGISTRATION	27/11/2014	
TITLE	SWITCH PLATE	
PRIORITY NA		

DESIGN NUMBER	266720	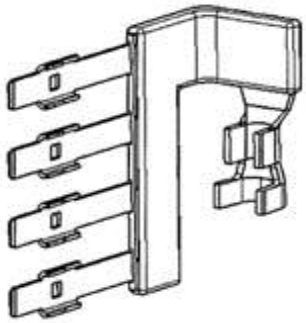
CLASS	13-03	
1)TATA MOTORS LIMITED, AN INDIAN COMPANY OF BOMBAY HOUSE, 24 HOMI MODY STREET, HUTATMA CHOWK, MUMBAI 400001, MAHARASHTRA, INDIA		
DATE OF REGISTRATION	15/10/2014	
TITLE	BUSBAR TERMINAL	
PRIORITY NA		

DESIGN NUMBER	267398	
CLASS	13-03	
1)M/S GM MODULAR PVT. LTD., (A COMPANY INCORPORATED UNDER INDIAN COMPANIES ACT), 14/15, BOKADIA IND. ESTATE, SATIVALI ROAD, VASAI (EAST)-401208, DISTRICT-THANE, MAHARASHTRA (INDIA)		
DATE OF REGISTRATION	14/11/2014	
TITLE	DOOR BELL	
PRIORITY NA		

DESIGN NUMBER	269270
CLASS	09-01

1)PEARL POLYMERS LIMITED, OF A-97/2, OKHLA INDUSTRIAL AREA, PHASE 2, NEW DELHI-110 020, INDIA,
A COMPANY INCORPORATED UNDER THE COMPANIES ACT, 1956, OF THE ABOVE ADDRESS

DATE OF REGISTRATION	03/02/2015
TITLE	BOTTLE

PRIORITY NA

DESIGN NUMBER	267178
CLASS	15-04

1)JOSEPH VÖGELE AG,
JOSEPH-VÖGELE-STRASSE 1, 67067 LUDWIGSHAFEN/RHEIN, GERMANY; NATIONALITY: GERMANY

DATE OF REGISTRATION	03/11/2014
TITLE	ROAD CONSTRUCTION MACHINE

PRIORITY

PRIORITY NUMBER	DATE	COUNTRY
002539254	17/09/2014	OHIM

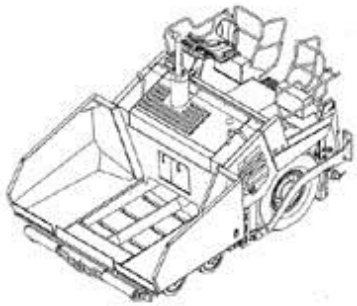

DESIGN NUMBER	266591
CLASS	08-07

1)(1) RUPESHBHAI MANSUKHBHAI MANSARA (2) JAYESHBHAI GOBARBHAI SHEKHLIYA (3) CHETANBHAI LAVJIBHAI SINGHALA (ALL THE PARTNERS ARE ADULT AND INDIAN NATIONALS) PARTNERS OF JAY SOMNATH METAL (INDIAN PARTNERSHIP FIRM)
HAVING PLACE OF BUSINESS AT-3, MARUTI INDUSTRIAL AREA, KOTHARIA RING ROAD, B/S. MURLIDHAR WAYBRIDGE, N H NO. 8 B, RAJKOT-360 003-GUJARAT,- (INDIA)

DATE OF REGISTRATION	10/10/2014
TITLE	DOOR LATCH

PRIORITY NA

DESIGN NUMBER	267759
CLASS	13-03
1)M/S GM MODULAR PVT. LTD., (A COMPANY INCORPORATED UNDER INDIAN COMPANIES ACT), 14/15, BOKADIA IND. ESTATE, SATIVALI ROAD, VASAI (EAST)-401208, DISTRICT-THANE, MAHARASHTRA (INDIA)	
DATE OF REGISTRATION	27/11/2014
TITLE	DISTRIBUTION BOX
PRIORITY NA	

DESIGN NUMBER	266717
CLASS	15-04
1)HARNISCHFEGER TECHNOLOGIES, INC., A COMPANY ORGANIZED UNDER THE LAWS OF THE UNITED STATES OF AMERICA, OF 2751 CENTERVILLE ROAD, SUITE 342, WILMINGTON, DELAWARE 19808, UNITED STATES OF AMERICA	
DATE OF REGISTRATION	15/10/2014
TITLE	CRAWLER TRACK SHOE FOR A CHAIN MOVEMENT ASSEMBLY

PRIORITY

PRIORITY NUMBER	DATE	COUNTRY
29/491,637	22/05/2014	U.S.A.

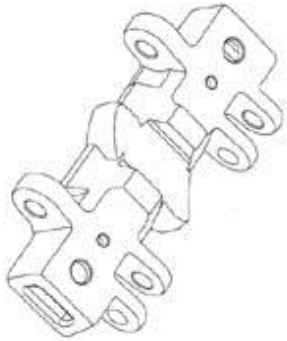

DESIGN NUMBER	268527
CLASS	15-01
1)JASHWANTLAL P. PANCHAL, INDIVIDUAL, AN INDIAN NATIONAL, PROPRIETOR OF PANCHAL MACHINERY, HAVING ITS OFFICE AT 13, AJAY INDUSTRIAL ESTATE, NEAR WATER TANK, DUDHESHWAR ROAD, DUDHESHWAR, AHMEDABAD-380 004, GUJARAT. INDIA.	
DATE OF REGISTRATION	31/12/2014
TITLE	TWIN SHAFT EXTRUDER GEAR BOX
PRIORITY NA	

DESIGN NUMBER	269268
CLASS	09-01
1)PEARL POLYMERS LIMITED, OF A-97/2, OKHLA INDUSTRIAL AREA, PHASE 2, NEW DELHI-110 020, INDIA, A COMPANY INCORPORATED UNDER THE COMPANIES ACT, 1956, OF THE ABOVE ADDRESS	
DATE OF REGISTRATION	03/02/2015
TITLE	BOTTLE
PRIORITY NA	

DESIGN NUMBER	261393
CLASS	26-04
1)M/S. TLV PACKAGING SOLUTIONS PRIVATE LIMITED AN INDIAN COMPANY HAVING REGISTERED ADDRESS AT 202, YOLEE BUILDING, NO. 14, POTTERY ROAD, RICHARDS TOWN, BANGALORE-560 005, INDIA	
DATE OF REGISTRATION	31/03/2014
TITLE	LIGHTING DEVICE
PRIORITY NA	

DESIGN NUMBER	267176
CLASS	15-04
1)JOSEPH VÖGELE AG, JOSEPH-VÖGELE-STRASSE 1, 67067 LUDWIGSHAFEN/RHEIN, GERMANY; NATIONALITY: GERMANY	
DATE OF REGISTRATION	03/11/2014
TITLE	ROAD CONSTRUCTION MACHINE

PRIORITY

PRIORITY NUMBER	DATE	COUNTRY
002539254	17/09/2014	EUROPEAN UNION

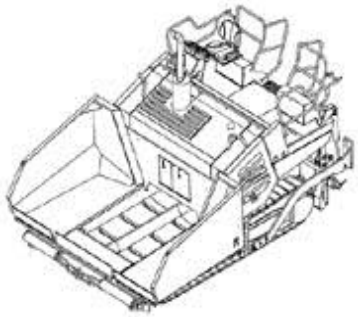

DESIGN NUMBER	200493	
CLASS	07-02	
1)JOSE THAIKATTIL, THAIKATTIL HOUSE, TIRURANGADI P.O., KERALA STATE, INDIA, AN INDIAN NATIONAL.		
DATE OF REGISTRATION	26/07/2005	
TITLE	COOKER HANDLE	
PRIORITY NA		

DESIGN NUMBER	265975	
CLASS	09-07	
1)M/S. SBL PVT. LTD., AN INDIAN COMPANY OF SBL HOUSE, 2 COMMERCIAL COMPLEX, NEAR DAV PUBLIC SCHOOL, SHRESTHA VIHAR, DELHI-110092, INDIA		
DATE OF REGISTRATION	24/09/2014	
TITLE	BOTTLE CAP	
PRIORITY NA		

DESIGN NUMBER	203503	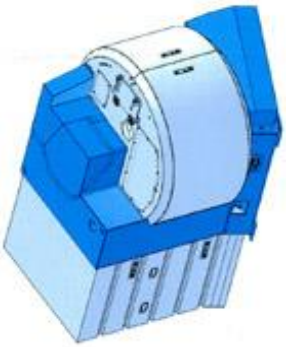
CLASS	15-04	
1)MASCHINENFABRIK, GUSTAV EIRICH GMBH & CO. KG., WALLDURNER STR. 50, 74736 HARDHEIM, GERMANY, A GERMAN COMPANY.		
DATE OF REGISTRATION	16/09/2005	
TITLE	MIXING MACHINE	

PRIORITY

PRIORITY NUMBER	DATE	COUNTRY
405 04 815.7	16/09/2005	GERMANY

DESIGN NUMBER	268477
CLASS	02-04
1)THAIKATTIL JOSE, THAIKATTIL HOUSE, OLLUKARA P.O., THRISSUR, KERALA STATE, 680655, INDIA, AN INDIAN NATIONAL	
DATE OF REGISTRATION	29/12/2014
TITLE	FOOTWEAR
PRIORITY NA	

DESIGN NUMBER	267154
CLASS	12-16
1)JOSEPH VÖGELE AG, JOSEPH-VÖGELE-STRASSE 1, 67067 LUDWIGSHAFEN/RHEIN, GERMANY; NATIONALITY: GERMAN	
DATE OF REGISTRATION	31/10/2014
TITLE	SIDE PANEL FOR A VEHICLE

PRIORITY

PRIORITY NUMBER	DATE	COUNTRY
002539254	17/09/2014	OHIM

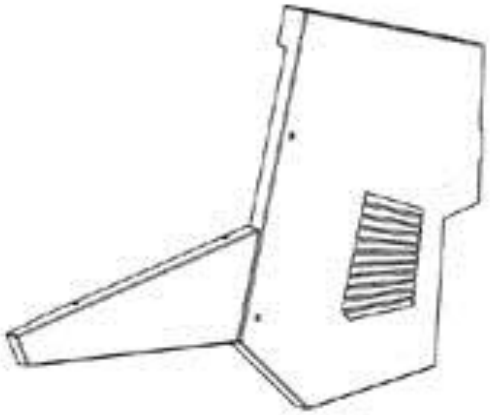

DESIGN NUMBER	212299
CLASS	24-03
1)OTTO BOCK HEALTHCARE PRODUCTS GMBH., OF KAISERSTRASSE 39, 1070 WIEN, AUSTRIA, AN AUSTRIAN COMPANY	
DATE OF REGISTRATION	10/09/2007
TITLE	PROSTHESIS
PRIORITY NA	

DESIGN NUMBER	266537	
CLASS	09-01	
1)NISHEETH DUBEY, AN INDIAN NATIONAL OF DUBEY HOUSE, 19-2-422 CHANDULAL BARADARI, HYDERABAD 500064, INDIA.		
DATE OF REGISTRATION	09/10/2014	
TITLE	PERFUME DISPENSER	
PRIORITY NA		

DESIGN NUMBER	268171	
CLASS	09-03	
1)S. N. PLAST, INDIAN PROPRIETOR FIRM, 41, KRISHNA ESTATE, B/H. B.O.C. GASSES, OPP. GOPINATH ESTATE, NR. SONI NI CHAWL, RAKHIAL, AHMEDABAD, GUJARAT-380023		
DATE OF REGISTRATION	12/12/2014	
TITLE	CONTAINER	
PRIORITY NA		

DESIGN NUMBER	267754	
CLASS	13-03	
1)M/S GM MODULAR PVT. LTD., (A COMPANY INCORPORATED UNDER INDIAN COMPANIES ACT), 14/15, BOKADIA IND. ESTATE, SATIVALI ROAD, VASAI (EAST)-401208, DISTRICT-THANE, MAHARASHTRA (INDIA)		
DATE OF REGISTRATION	27/11/2014	
TITLE	SWITCH PLATE	
PRIORITY NA		

DESIGN NUMBER	266920
CLASS	14-03
1)M/S GM MODULAR PVT. LTD., (A COMPANY INCORPORATED UNDER INDIAN COMPANIES ACT), 14/15, BOKADIA IND. ESTATE, SATIVALI ROAD, VASAI (EAST)-401208, DISTRICT-THANE, MAHARASHTRA (INDIA)	
DATE OF REGISTRATION	27/10/2014
TITLE	BLUETOOTH PLAYER MODULAR
PRIORITY NA	

DESIGN NUMBER	267230
CLASS	12-16
1)DAIWA KASEI KOGYO KABUSHIKI KAISHA, A BODY CORPORATE INCORPORATED UNDER THE LAWS OF JAPAN, HAVING ITS REGISTERED OFFICE AT 1, AZA KAMIHIRACHI, HOBO-CHO, OKAZAKI-SHI, AICHI-KEN, JAPAN	
DATE OF REGISTRATION	07/11/2014
TITLE	CUSHION CLIP

PRIORITY

PRIORITY NUMBER	DATE	COUNTRY
2014-009860	08/05/2014	JAPAN

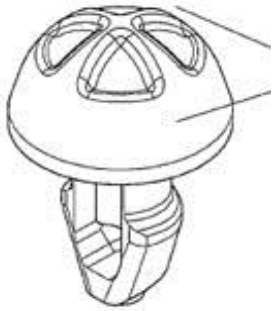

DESIGN NUMBER	267468
CLASS	06-04
1)MR. ARUN KALANI (PARTNER), NATIONALITY INDIAN TRADING AS THAR ART EXPORTS (A GOVT. RECOGNIZED EXPORT HOUSE) (INDIAN) WHOES ADDRESS IS S.P.-02 E.P.I.P., BORANADA, JODHPUR-342012, RAJASTHAN (INDIA)	
DATE OF REGISTRATION	17/11/2014
TITLE	STORAGE CABINET
PRIORITY NA	

DESIGN NUMBER	267171
CLASS	12-16
1)JOSEPH VÖGELE AG, JOSEPH-VÖGELE-STRASSE 1, 67067 LUDWIGSHAFEN/RHEIN, GERMANY; NATIONALITY: GERMANY	
DATE OF REGISTRATION	03/11/2014
TITLE	CONTROL PANEL FOR A VEHICLE

PRIORITY

PRIORITY NUMBER	DATE	COUNTRY
002539254	17/09/2014	OHIM

DESIGN NUMBER	265225
CLASS	05-05
1)M/S. NAKSHATRA CREATIONS PVT. LTD., OF PLOT NO 5511, ROAD NO 55, G.I.D.C., SACHIN, DIST. SURAT-394230 SURAT (GUJARAT) INDIA, AND A COMPANY REGISTERED UNDER THE COMPANY ACT SITUATED AT ABOVE ADDRESS	
DATE OF REGISTRATION	28/08/2014
TITLE	TEXTILE FABRIC
PRIORITY NA	

DESIGN NUMBER	266690
CLASS	14-03
1)BROADCAST AUDIENCE RESEARCH COUNCIL,. ROSE COTTAGE, NEXT TO CITI TOWER, 61 DR. S. S. RAO ROAD, PAREL (EAST), MUMBAI 400012, MAHARASHTRA, INDIA; AN INDIAN COMPANY	
DATE OF REGISTRATION	13/10/2014
TITLE	REMOTE CONTROL
PRIORITY NA	

DESIGN NUMBER	268756
CLASS	08-06
1)SUMANGAL TECHNOCAST PVT. LTD. (A COMPANY INCORPORATED UNDER THE COMPANIES ACT, 1956) HAVING ITS PRINCIPAL PLACE OF BUSINESS AT ADDRESS: AIMS INDUSTRIAL PARK, SURVEY NO. 195/P 66, 80 FEET ROAD, BEHIND GOLDEN IND. AREA, KOTHARIYA, RAJKOT, GUJARAT, INDIA	
DATE OF REGISTRATION	09/01/2015
TITLE	HANDLE
PRIORITY NA	

DESIGN NUMBER	267770
CLASS	26-02
1)RAL CONSUMER PRODUCTS LTD. OF B-7/2, OKHLA INDUSTRIAL AREA, PHASE-2, NEW DELHI-110020, INDIA, AN INDIAN COMPANY	
DATE OF REGISTRATION	27/11/2014
TITLE	SOLAR LANTERN
PRIORITY NA	

DESIGN NUMBER	268222
CLASS	23-04
1)M/S. ORIENT ELECTRIC (A DIVISION OF ORIENT PAPER & INDUSTRIES LTD.), 11, INDUSTRIAL ESTATE, SECTOR-6, FARIDABAD-121006, HARYANA	
DATE OF REGISTRATION	16/12/2014
TITLE	CEILING FAN
PRIORITY NA	

DESIGN NUMBER	268541
CLASS	21-01
1)MOHD. IKRAM, SOLE PROPRIETOR OF M/S. CHOUDHARY TOYS, WHOSE ADDRESS IS 152, PHASE-II, SHAHZADA BAGH, INDERLOK, DELHI-110035, (INDIA), AN INDIAN NATIONAL OF THE ABOVE ADDRESS	
DATE OF REGISTRATION	31/12/2014
TITLE	TOY
PRIORITY NA	

DESIGN NUMBER	269618
CLASS	23-04
1)GODREJ & BOYCE MFG. CO. LTD., AN INDIAN COMPANY INCORPORATED UNDER THE COMPANIES ACT, 1913, OF GODREJ APPLIANCE, PLANT 11, PIROJSHANAGER, VIKHROLI (WEST), MUMBAI-400079, INDIA	
DATE OF REGISTRATION	13/02/2015
TITLE	AIR CONDITIONER
PRIORITY NA	

DESIGN NUMBER	267148
CLASS	12-16
1)JOSEPH VÖGELE AG, JOSEPH-VÖGELE-STRASSE 1, 67067 LUDWIGSHAFEN/RHEIN, GERMANY; NATIONALITY: GERMAN	
DATE OF REGISTRATION	31/10/2014
TITLE	CONTROL PANEL FOR A VEHICLE

PRIORITY

PRIORITY NUMBER	DATE	COUNTRY
002539254	17/09/2014	OHIM

DESIGN NUMBER	267187
CLASS	12-16
1)JOSEPH VÖGELE AG, JOSEPH-VÖGELE-STRASSE 1, 67067 LUDWIGSHAFEN/RHEIN, GERMANY; NATIONALITY: GERMANY	
DATE OF REGISTRATION	03/11/2014
TITLE	SIDE PANEL FOR A VEHICLE
PRIORITY	

PRIORITY NUMBER	DATE	COUNTRY
002539254	17/09/2014	OHIM

DESIGN NUMBER	200084
CLASS	23-01
1)B.G.RAGHAVENDRA RAO; ADDRESS AND NATIONALITY NO.1316/A, HARISH, 3RD CROSS, BETWEEN 7TH & 8TH MAIN, RAJAJI NAGAR II STAGE, A BLOCK, BANGALORE-560010, KARNATAKA: INDIAN	
DATE OF REGISTRATION	17/06/2005
TITLE	GAS SAVER AND SAFETY DEVICE
PRIORITY NA	

DESIGN NUMBER	268226
CLASS	08-07
1)REENA THAKKAR (AN INDIAN NATIONAL) TRADING AS M/S. TP INDUSTRIES 1255, HSIIDC INDUSTRIAL ESTATE RAI, SONEPAT, HARYANA	
DATE OF REGISTRATION	16/12/2014
TITLE	HELMET LOCKING DEVICE
PRIORITY NA	

DESIGN NUMBER	258749
CLASS	14-03

1)NOKIA CORPORATION, A FINNISH CORPORATION, OF THE ADDRESS
KEILALAHDENTIE 4, ESPOO, FINLAND 02150

DATE OF REGISTRATION	16/12/2013
TITLE	MOBILE PHONE

PRIORITY

PRIORITY NUMBER	DATE	COUNTRY
29/458600	20/06/2013	U.S.A.

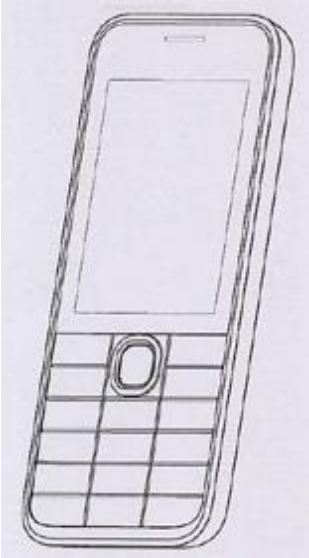

DESIGN NUMBER	267264
CLASS	31-00

1)WHIRLPOOL S.A., A BRAZILIAN COMPANY,
OF AVENIDA DAS NACOES UNIDAS, 12.995-32° ANDAR, BROOKLIN NOVO-04578-000-SAO PAULO-SP-BRAZIL

DATE OF REGISTRATION	07/11/2014
TITLE	BEVERAGE EQUIPMENT

PRIORITY

PRIORITY NUMBER	DATE	COUNTRY
BR 30 2014 002025 0	07/05/2014	BRAZIL

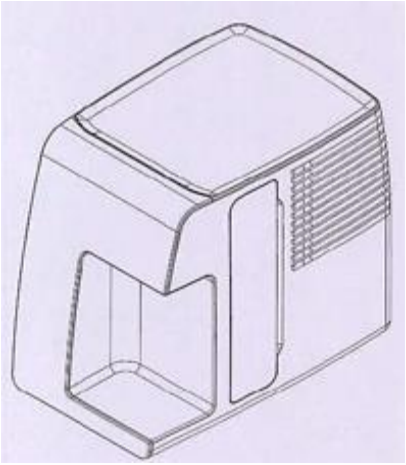

DESIGN NUMBER	267152
CLASS	12-16

1)JOSEPH VÖGELE AG,
JOSEPH-VÖGELE-STRASSE 1, 67067 LUDWIGSHAFEN/RHEIN, GERMANY

DATE OF REGISTRATION	31/10/2014
TITLE	CONTROL PANEL FOR A VEHICLE

PRIORITY

PRIORITY NUMBER	DATE	COUNTRY
002539254	17/09/2014	OHIM

DESIGN NUMBER	267191
CLASS	12-16

1)JOSEPH VÖGELE AG,
JOSEPH-VÖGELE-STRASSE 1, 67067 LUDWIGSHAFEN/RHEIN, GERMANY; NATIONALITY: GERMANY

DATE OF REGISTRATION	03/11/2014
TITLE	SIDE PANEL FOR A VEHICLE

PRIORITY

PRIORITY NUMBER	DATE	COUNTRY
002539254	17/09/2014	OHIM

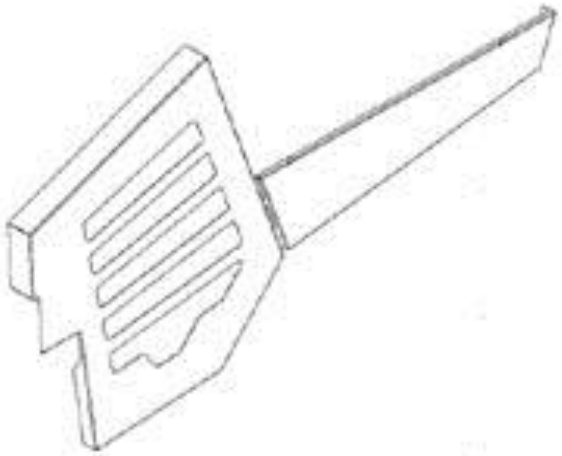

DESIGN NUMBER	212297
CLASS	24-03

1)OTTO BOCK HEALTHCARE PRODUCTS GMBH.,
OF KAISERSTRASSE 39, 1070 WIEN, AUSTRIA

DATE OF REGISTRATION	10/09/2007
TITLE	PROSTHESIS

PRIORITY NA

DESIGN NUMBER	268225
CLASS	02-03

1)REENA THAKKAR (AN INDIAN NATIONAL) TRADING AS M/S. TP INDUSTRIES
1255, HSIIDC INDUSTRIAL ESTATE RAI, SONEPAT, HARYANA

DATE OF REGISTRATION	16/12/2014
TITLE	HELMET

PRIORITY NA

DESIGN NUMBER	266891
CLASS	15-03

1)C. KAMAL., OF
NO. 214, ANTHIYUR ROAD, CHINNEGOUNDANVALASU, KUNNATHUR-638103, TIRUPUR (DISTRICT), TAMIL NADU, INDIA; NATIONALITY: INDIAN

DATE OF REGISTRATION	23/10/2014
TITLE	ROTARY TIILING MACHINE

PRIORITY NA

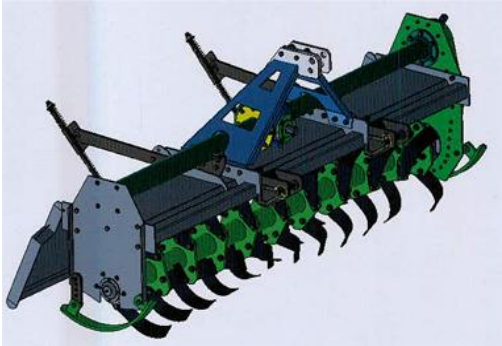

DESIGN NUMBER	268544
CLASS	21-01

1)MOHD. IKRAM, SOLE PROPRIETOR OF M/S. CHOUDHARY TOYS, WHOSE ADDRESS IS
152, PHASE-II, SHAHZADA BAGH, INDERLOK, DELHI-110035, (INDIA), AN INDIAN NATIONAL OF THE ABOVE ADDRESS

DATE OF REGISTRATION	31/12/2014
TITLE	TOY

PRIORITY NA

DESIGN NUMBER	267263
CLASS	31-00

1)WHIRLPOOL S.A., A BRAZILIAN COMPANY,
OF AVENIDA DAS NACOES UNIDAS, 12.995-32° ANDAR, BROOKLIN NOVO-04578-000-SAO PAULO-SP-BRAZIL

DATE OF REGISTRATION	07/11/2014
TITLE	BEVERAGE EQUIPMENT

PRIORITY

PRIORITY NUMBER	DATE	COUNTRY
BR 30 2014 002025 0	07/05/2014	BRAZIL

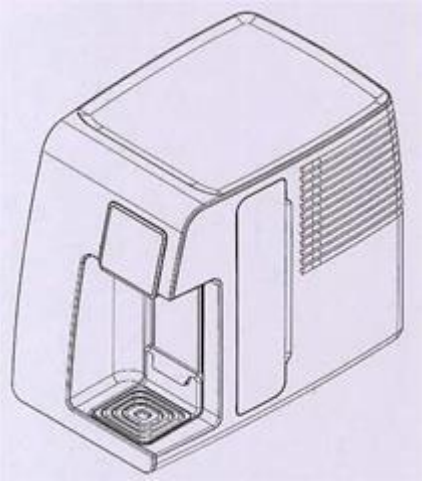

DESIGN NUMBER	267151
CLASS	12-16
1)JOSEPH VÖGELE AG, JOSEPH-VÖGELE-STRASSE 1, 67067 LUDWIGSHAFEN/RHEIN, GERMANY; NATIONALITY: GERMAN	
DATE OF REGISTRATION	31/10/2014
TITLE	SIDE PANEL FOR A VEHICLE

PRIORITY

PRIORITY NUMBER	DATE	COUNTRY
002539254	17/09/2014	OHIM

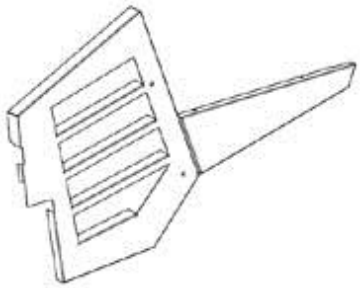

DESIGN NUMBER	267190
CLASS	12-16
1)JOSEPH VÖGELE AG, JOSEPH-VÖGELE-STRASSE 1, 67067 LUDWIGSHAFEN/RHEIN, GERMANY; NATIONALITY: GERMANY	
DATE OF REGISTRATION	03/11/2014
TITLE	SIDE PANEL FOR A VEHICLE

PRIORITY

PRIORITY NUMBER	DATE	COUNTRY
002539254	17/09/2014	OHIM

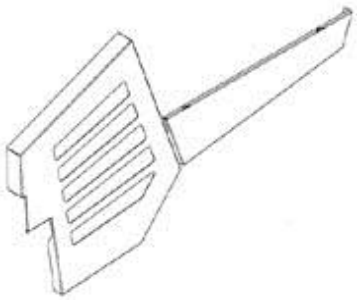

DESIGN NUMBER	212296
CLASS	24-03
1)OTTO BOCK HEALTHCARE PRODUCTS GMBH., OF KAISERSTRASSE 39, 1070 WIEN, AUSTRIA	
DATE OF REGISTRATION	10/09/2007
TITLE	PROSTHESIS
PRIORITY NA	

DESIGN NUMBER	265214
CLASS	05-05
1)M/S. NAKSHATRA CREATIONS PVT. LTD., OF PLOT NO 5511, ROAD NO 55, G.I.D.C., SACHIN, DIST. SURAT-394230 SURAT (GUJARAT) INDIA, AND A COMPANY REGISTERED UNDER THE COMPANY ACT SITUATED AT ABOVE ADDRESS	
DATE OF REGISTRATION	28/08/2014
TITLE	TEXTILE FABRIC
PRIORITY NA	

DESIGN NUMBER	267509
CLASS	08-05
1)ILR SAFETY CC, A COMPANY REGISTERED ACCORDING TO THE LAWS OF THE REPUBLIC OF SOUTH AFRICA OF 72 SUTHERLAND AVENUE, PARKTOWN NORTH, 2193, SOUTH AFRICA	
DATE OF REGISTRATION	19/11/2014
TITLE	PUNCH DEVICE FOR BREAKING A SHEET OF GLASS
PRIORITY	

PRIORITY NUMBER	DATE	COUNTRY
F2014/00809	19/05/2014	SOUTH AFRICA

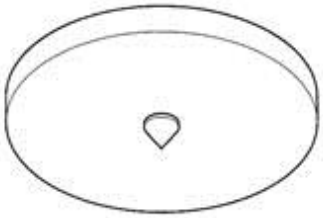

DESIGN NUMBER	265246
CLASS	05-05
1)M/S. NAKSHATRA CREATIONS PVT. LTD., OF PLOT NO 5511, ROAD NO 55, G.I.D.C., SACHIN, DIST. SURAT-394230 SURAT (GUJARAT) INDIA, AND A COMPANY REGISTERED UNDER THE COMPANY ACT SITUATED AT ABOVE ADDRESS	
DATE OF REGISTRATION	28/08/2014
TITLE	TEXTILE FABRIC
PRIORITY NA	

DESIGN NUMBER	266692
CLASS	14-03
1)BROADCAST AUDIENCE RESEARCH COUNCIL, ROSE COTTAGE, NEXT TO CITI TOWER, 61 DR. S. S. RAO ROAD, PAREL (EAST), MUMBAI 400012, MAHARASHTRA, INDIA; AN INDIAN COMPANY	
DATE OF REGISTRATION	13/10/2014
TITLE	DISPLAY UNIT FOR TELEVISION VIEWING POINT
PRIORITY NA	

DESIGN NUMBER	266913
CLASS	13-03
1)M/S GM MODULAR PVT. LTD., (A COMPANY INCORPORATED UNDER INDIAN COMPANIES ACT), 14/15, BOKADIA IND. ESTATE, SATIVALI ROAD, VASAI (EAST)-401208, DISTRICT-THANE, MAHARASHTRA (INDIA)	
DATE OF REGISTRATION	27/10/2014
TITLE	SWITCH
PRIORITY NA	

DESIGN NUMBER	268634
CLASS	12-11
1)SAGAR VINODBHAI VIRADIYA (ADULT AND INDIAN NATIONAL) HAVING PLACE OF BUSINESS AT- RADHIKA DAIRY FARM, VIKRAMSINHJI ROAD, CHORDI GATE, GONDAL, DIST: RAJKOT-GUJARAT-(INDIA)	
DATE OF REGISTRATION	05/01/2015
TITLE	BICYCLE
PRIORITY NA	

DESIGN NUMBER	267167
CLASS	15-04
1)JOSEPH VÖGELE AG, JOSEPH-VÖGELE-STRASSE 1, 67067 LUDWIGSHAFEN/RHEIN, GERMANY; NATIONALITY: GERMANY	
DATE OF REGISTRATION	03/11/2014
TITLE	ROAD CONSTRUCTION MACHINE

PRIORITY

PRIORITY NUMBER	DATE	COUNTRY
002539254	17/09/2014	EUROPEAN UNION

DESIGN NUMBER	266914
CLASS	13-03
1)M/S GM MODULAR PVT. LTD., (A COMPANY INCORPORATED UNDER INDIAN COMPANIES ACT), 14/15, BOKADIA IND. ESTATE, SATIVALI ROAD, VASAI (EAST)-401208, DISTRICT-THANE, MAHARASHTRA (INDIA)	
DATE OF REGISTRATION	27/10/2014
TITLE	SWITCH
PRIORITY NA	

DESIGN NUMBER	267466
CLASS	06-02
1)MR. ARUN KALANI (PARTNER), NATIONALITY INDIAN TRADING AS THAR ART EXPORTS (A GOVT. RECOGNIZED EXPORT HOUSE) (INDIAN) WHOES ADDRESS IS S.P.-02 E.P.I.P., BORANADA, JODHPUR-342012, RAJASTHAN (INDIA)	
DATE OF REGISTRATION	17/11/2014
TITLE	BED
PRIORITY NA	

DESIGN NUMBER	268635
CLASS	08-06
1)MAHESHBHAI BABUBHAI SARDHARA (ADULT & INDIAN NATIONAL) HAVING PLACE OF BUSINESS AT- JAMNAPARK, BLOCK NO. 35, MAYANICHOWK, RAJKOT-GUJARAT-(INDIA)	
DATE OF REGISTRATION	05/01/2015
TITLE	HANDLE
PRIORITY NA	

DESIGN NUMBER	267168
CLASS	15-04
1)JOSEPH VÖGELE AG, JOSEPH-VÖGELE-STRASSE 1, 67067 LUDWIGSHAFEN/RHEIN, GERMANY; NATIONALITY: GERMANY	
DATE OF REGISTRATION	03/11/2014
TITLE	ROAD CONSTRUCTION MACHINE

PRIORITY

PRIORITY NUMBER	DATE	COUNTRY
002539254	17/09/2014	EUROPEAN UNION

DESIGN NUMBER	234617
CLASS	08-07
1)SUNIL TRIKAMLAL PANCHAL SHREEJI INDUSTRIES, 23, MADHURAM COMPLEX, SUBHASHBRIDGE, AHMEDABAD-3802 027, GUJARAT, INDIA	
DATE OF REGISTRATION	18/02/2011
TITLE	SEAL
PRIORITY NA	

DESIGN NUMBER	266539	
CLASS	09-01	
1)NISHEETH DUBEY, AN INDIAN NATIONAL OF DUBEY HOUSE, 19-2-422 CHANDULAL BARADARI, HYDERABAD 500064, INDIA.		
DATE OF REGISTRATION	09/10/2014	
TITLE	PERFUME DISPENSER	
PRIORITY NA		

DESIGN NUMBER	267756	
CLASS	13-03	
1)M/S GM MODULAR PVT. LTD., (A COMPANY INCORPORATED UNDER INDIAN COMPANIES ACT), 14/15, BOKADIA IND. ESTATE, SATIVALI ROAD, VASAI (EAST)-401208, DISTRICT-THANE, MAHARASHTRA (INDIA)		
DATE OF REGISTRATION	27/11/2014	
TITLE	SWITCH PLATE	
PRIORITY NA		

DESIGN NUMBER	266922	
CLASS	13-03	
1)M/S GM MODULAR PVT. LTD., (A COMPANY INCORPORATED UNDER INDIAN COMPANIES ACT), 14/15, BOKADIA IND. ESTATE, SATIVALI ROAD, VASAI (EAST)-401208, DISTRICT-THANE, MAHARASHTRA (INDIA)		
DATE OF REGISTRATION	27/10/2014	
TITLE	WIFI SWITCH	
PRIORITY NA		

DESIGN NUMBER	268524
CLASS	15-01
1)JASHWANTLAL P. PANCHAL, INDIVIDUAL, AN INDIAN NATIONAL, PROPRIETOR OF PANCHAL MACHINERY, HAVING ITS OFFICE AT 13, AJAY INDUSTRIAL ESTATE, NEAR WATER TANK, DUDHESHWAR ROAD, DUDHESHWAR, AHMEDABAD-380 004. GUJARAT. INDIA.	
DATE OF REGISTRATION	31/12/2014
TITLE	TWIN SHAFT EXTRUDER GEAR BOX
PRIORITY NA	

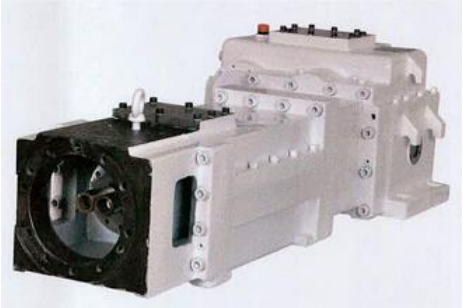

DESIGN NUMBER	267471
CLASS	06-04
1)MR. ARUN KALANI (PARTNER), NATIONALITY INDIAN TRADING AS THAR ART EXPORTS (A GOVT. RECOGNIZED EXPORT HOUSE) (INDIAN) WHOES ADDRESS IS S.P.-02 E.P.I.P., BORANADA, JODHPUR-342012, RAJASTHAN (INDIA)	
DATE OF REGISTRATION	17/11/2014
TITLE	CUPBOARD
PRIORITY NA	

DESIGN NUMBER	267173
CLASS	15-04
1)JOSEPH VÖGELE AG, JOSEPH-VÖGELE-STRASSE 1, 67067 LUDWIGSHAFEN/RHEIN, GERMANY; NATIONALITY: GERMANY	
DATE OF REGISTRATION	03/11/2014
TITLE	ROAD CONSTRUCTION MACHINE

PRIORITY

PRIORITY NUMBER	DATE	COUNTRY
002539254	17/09/2014	EUROPEAN UNION

DESIGN NUMBER	200674
CLASS	02-02
1)KAIZAR MITHAIWALA AND RADHIKA NAIK, AT NO. 6 SEA VIEW TERRACE, 68-71 WODEHOUSE ROAD, COLABA, MUMBAI-400 005, MAHARASHTRA, INDIA,	
DATE OF REGISTRATION	04/08/2005
TITLE	DRESS
PRIORITY NA	

DESIGN NUMBER	268224
CLASS	23-04
1)M/S. ORIENT ELECTRIC (A DIVISION OF ORIENT PAPER & INDUSTRIES LTD.), 11, INDUSTRIAL ESTATE, SECTOR-6, FARIDABAD-121006, HARYANA	
DATE OF REGISTRATION	16/12/2014
TITLE	CEILING FAN
PRIORITY NA	

DESIGN NUMBER	251050
CLASS	09-01
1)MR. IFTEKHAR AHMED., AN INDIAN CITIZEN, AT 204, S. C. M. ROAD, BHANGAGARA, JORA ASTHATALA, P.O. BHAIDYABATI, DIST. HOOGHLY, PIN-712222, STATE OF WEST BENGAL, INDIA	
DATE OF REGISTRATION	21/01/2013
TITLE	BOTTLE
PRIORITY NA	

DESIGN NUMBER	266890
CLASS	15-03
1)C. KAMAL., OF NO. 214, ANTHIYUR ROAD, CHINNEGOUNDANVALASU, KUNNATHUR-638103, TIRUPUR (DISTRICT), TAMIL NADU, INDIA; NATIONALITY: INDIAN	
DATE OF REGISTRATION	23/10/2014
TITLE	ROTARY FLANGE FOR TILLING MACHINE
PRIORITY NA	

DESIGN NUMBER	267262
CLASS	31-00
1)WHIRLPOOL S.A., A BRAZILIAN COMPANY, OF AVENIDA DAS NACOES UNIDAS, 12.995-32° ANDAR, BROOKLIN NOVO-04578-000-SAO PAULO-SP-BRAZIL	
DATE OF REGISTRATION	07/11/2014
TITLE	BEVERAGE EQUIPMENT

PRIORITY

PRIORITY NUMBER	DATE	COUNTRY
BR 30 2014 002025 0	07/05/2014	BRAZIL

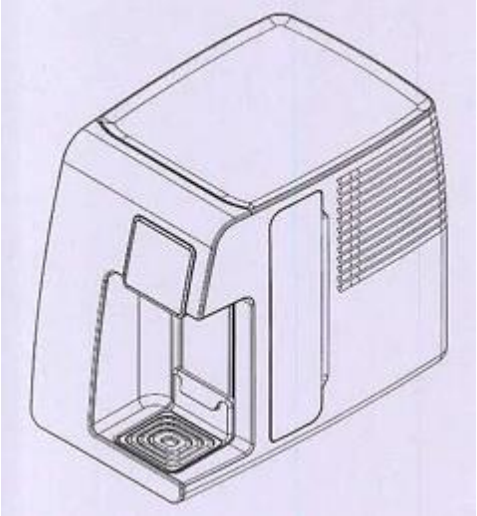

DESIGN NUMBER	268462
CLASS	12-16
1)MINDARIKA PRIVATE LIMITED, AN INDIAN COMPANY OF VILLAGE NAWADA FATEHPUR, PO SIKANDERPUR BADDA, DISTT. GURGAON-122004, HARYANA, INDIA	
DATE OF REGISTRATION	29/12/2014
TITLE	STOP LAMP SWITCH ASSEMBLY FOR A VEHICLE
PRIORITY NA	

DESIGN NUMBER	267150
CLASS	12-16
1)JOSEPH VÖGELE AG, JOSEPH-VÖGELE-STRASSE 1, 67067 LUDWIGSHAFEN/RHEIN, GERMANY; NATIONALITY: GERMAN	
DATE OF REGISTRATION	31/10/2014
TITLE	SIDE PANEL FOR A VEHICLE

PRIORITY

PRIORITY NUMBER	DATE	COUNTRY
002539254	17/09/2014	OHIM

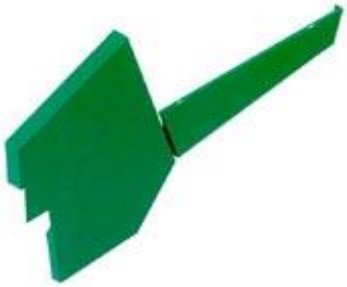

DESIGN NUMBER	267189
CLASS	12-16
1)JOSEPH VÖGELE AG, JOSEPH-VÖGELE-STRASSE 1, 67067 LUDWIGSHAFEN/RHEIN, GERMANY; NATIONALITY: GERMANY	
DATE OF REGISTRATION	03/11/2014
TITLE	SIDE PANEL FOR A VEHICLE

PRIORITY

PRIORITY NUMBER	DATE	COUNTRY
002539254	17/09/2014	OHIM

DESIGN NUMBER	200086
CLASS	23-01
1)B.G.RAGHAVENDRA RAO; ADDRESS AND NATIONALITY NO.1316/A, HARISH, 3RD CROSS, BETWEEN 7TH & 8TH MAIN, RAJAJI NAGAR II STAGE, A BLOCK, BANGALORE-560010, KARNATAKA: INDIAN	
DATE OF REGISTRATION	16/06/2005
TITLE	GAS SAVER AND SAFETY DEVICE
PRIORITY NA	

DESIGN NUMBER	265115
CLASS	26-04
1)M/S SHREE SANT KRIPA INTELLECTUAL, HAVING OFFICE AT 7, AKSHAY COMPLEX, OFF. DHOLE PATIL ROAD, PUNE-411001, MAHARASHTRA, INDIA, AN INDIAN	
DATE OF REGISTRATION	26/08/2014
TITLE	BULBS FOR ELECTRIC LAMPS
PRIORITY NA	

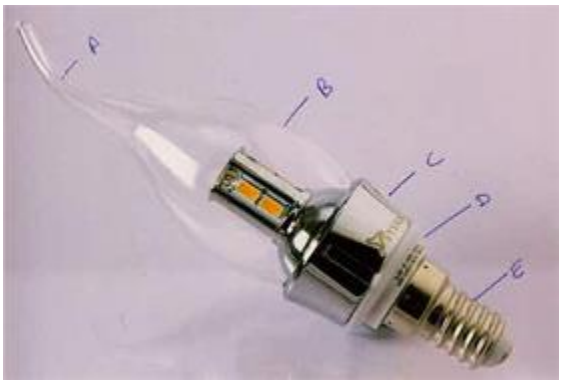

DESIGN NUMBER	265991
CLASS	15-07
1)GODREJ & BOYCE MFG. CO. LTD., AN INDIAN COMPANY INCORPORATED UNDER THE COMPANIES ACT 1913, APPLIANCE DIVISION, PLANT 11, PIROJSHANAGAR, VIKHROLI (WEST), MUMBAI-400079, INDIA.	
DATE OF REGISTRATION	24/09/2014
TITLE	REFRIGERATOR
PRIORITY NA	

DESIGN NUMBER	268931
CLASS	23-01
1)SMC CORPORATION, A JAPANESE CORPORATION OF 4-14-1, SOTOKANDA, CHIYODA-KU, TOKYO 101-0021, JAPAN	
DATE OF REGISTRATION	19/01/2015
TITLE	FLOW RATE CONTROL VALVE

PRIORITY

PRIORITY NUMBER	DATE	COUNTRY
2014-016031	24/07/2014	JAPAN

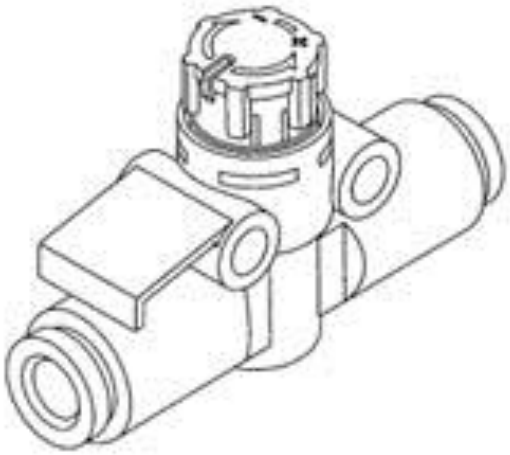

DESIGN NUMBER	268741
CLASS	28-03
1)UDIT AGARWAL, AN INDIAN CITIZEN, C/O GANGA SANITARY STORE, STATION ROAD, MORADABAD-244001, UP, INDIA	
DATE OF REGISTRATION	09/01/2015
TITLE	DISPENSER
PRIORITY NA	

DESIGN NUMBER	267156
CLASS	12-16
1)JOSEPH VÖGELE AG, JOSEPH-VÖGELE-STRASSE 1, 67067 LUDWIGSHAFEN/RHEIN, GERMANY; NATIONALITY: GERMAN	
DATE OF REGISTRATION	31/10/2014
TITLE	SIDE PANEL FOR A VEHICLE
PRIORITY	

PRIORITY NUMBER	DATE	COUNTRY
002539254	17/09/2014	EUROPEAN UNION

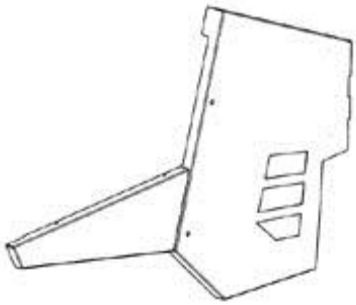

DESIGN NUMBER	212301
CLASS	24-03
1)OTTO BOCK HEALTHCARE PRODUCTS GMBH., OF KAISERSTRASSE 39, 1070 WIEN, AUSTRIA, AN AUSTRIAN COMPANY	
DATE OF REGISTRATION	10/09/2007
TITLE	PROSTHESIS
PRIORITY NA	

DESIGN NUMBER	266363
CLASS	12-16
1)IBIDEN CO., LTD., A JAPANESE COMPANY ORGANIZED AND EXISTING UNDER THE LAWS OF JAPAN OF 1, KANDACHO 2-CHOME, OGAKI-SHI, GIFU, JAPAN	
DATE OF REGISTRATION	30/09/2014
TITLE	HEAT INSULATING MEMBER FOR EXHAUST PIPE COMPONENT

PRIORITY

PRIORITY NUMBER	DATE	COUNTRY
2014-007206	01/04/2014	JAPAN

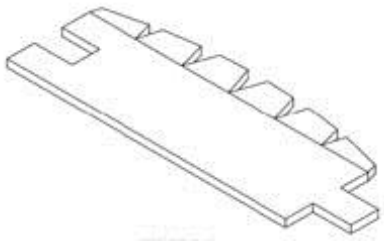

DESIGN NUMBER	267753
CLASS	11-02
1)(1) DR. JITEN P. BHATT (2) DR. DHARA BHATT (3) DR. PRIYAN BHATT (4) MISS JYOTI BHATT AND (5) DR. REENA BHATT ALL INDIAN NATIONAL PARTNERS OF PERCARE INDUSTRIES AN INDIAN PARTNERSHIP FIRM HAVING ITS PRINCIPAL PLACE OF BUSINESS AT ADDRESS: 355, GIDC, MAKARPURA, VADODARA-390010, GUJARAT-INDIA	
DATE OF REGISTRATION	27/11/2014
TITLE	DECORATIVE ARTICLE
PRIORITY NA	

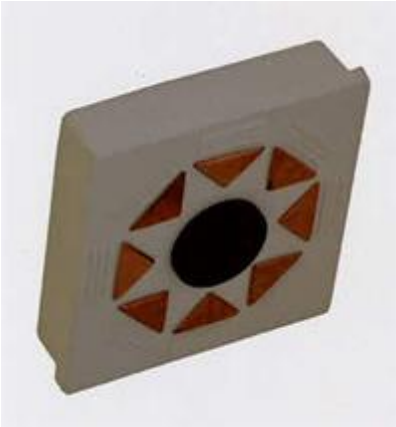

DESIGN NUMBER	266919
CLASS	13-03
1)M/S GM MODULAR PVT. LTD., (A COMPANY INCORPORATED UNDER INDIAN COMPANIES ACT), 14/15, BOKADIA IND. ESTATE, SATIVALI ROAD, VASAI (EAST)-401208, DISTRICT-THANE, MAHARASHTRA (INDIA)	
DATE OF REGISTRATION	27/10/2014
TITLE	DIMMER
PRIORITY NA	

DESIGN NUMBER	267467
CLASS	06-04
1)MR. ARUN KALANI (PARTNER), NATIONALITY INDIAN TRADING AS THAR ART EXPORTS (A GOVT. RECOGNIZED EXPORT HOUSE) (INDIAN) WHOES ADDRESS IS S.P.-02 E.P.I.P., BORANADA, JODHPUR-342012, RAJASTHAN (INDIA)	
DATE OF REGISTRATION	17/11/2014
TITLE	STORAGE FURNITURE
PRIORITY NA	

DESIGN NUMBER	268636
CLASS	08-06
1)MAHESHBHAI BABUBHAI SARDHARA (ADULT & INDIAN NATIONAL) HAVING PLACE OF BUSINESS AT- JAMNAPARK, BLOCK NO. 35, MAYANICHOWK, RAJKOT-GUJARAT-(INDIA)	
DATE OF REGISTRATION	05/01/2015
TITLE	HANDLE
PRIORITY NA	

DESIGN NUMBER	267169
CLASS	12-16
1)JOSEPH VÖGELE AG, JOSEPH-VÖGELE-STRASSE 1, 67067 LUDWIGSHAFEN/RHEIN, GERMANY; NATIONALITY: GERMANY	
DATE OF REGISTRATION	03/11/2014
TITLE	CONTROL PANEL FOR A VEHICLE
PRIORITY	

PRIORITY NUMBER	DATE	COUNTRY
002539254	17/09/2014	OHIM

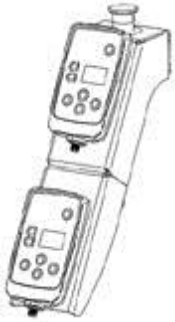

DESIGN NUMBER	267767
CLASS	13-03
1)M/S GM MODULAR PVT. LTD., (A COMPANY INCORPORATED UNDER INDIAN COMPANIES ACT), 14/15, BOKADIA IND. ESTATE, SATIVALI ROAD, VASAI (EAST)-401208, DISTRICT-THANE, MAHARASHTRA (INDIA)	
DATE OF REGISTRATION	27/11/2014
TITLE	SWITCH PLATE
PRIORITY NA	

DESIGN NUMBER	269617
CLASS	23-04
1)GODREJ & BOYCE MFG. CO. LTD., AN INDIAN COMPANY INCORPORATED UNDER THE COMPANIES ACT, 1913, OF GODREJ APPLIANCE, PLANT 11, PIROJSHANAGER, VIKHROLI (WEST), MUMBAI-400079, INDIA	
DATE OF REGISTRATION	13/02/2015
TITLE	AIR CONDITIONER
PRIORITY NA	

DESIGN NUMBER	267146
CLASS	12-16
1)JOSEPH VÖGELE AG, JOSEPH-VÖGELE-STRASSE 1, 67067 LUDWIGSHAFEN/RHEIN, GERMANY; NATIONALITY: GERMAN	
DATE OF REGISTRATION	31/10/2014
TITLE	SIDE PANEL FOR VEHICLE

PRIORITY

PRIORITY NUMBER	DATE	COUNTRY
002539254	17/09/2014	EUROPEAN UNION

DESIGN NUMBER	267186
CLASS	12-16
1)JOSEPH VÖGELE AG, JOSEPH-VÖGELE-STRASSE 1, 67067 LUDWIGSHAFEN/RHEIN, GERMANY; NATIONALITY: GERMANY	
DATE OF REGISTRATION	03/11/2014
TITLE	SIDE PANEL FOR A VEHICLE
PRIORITY	

PRIORITY NUMBER	DATE	COUNTRY
002539254	17/09/2014	OHIM

DESIGN NUMBER	266538
CLASS	09-01
1)NISHEETH DUBEY, AN INDIAN NATIONAL OF DUBEY HOUSE, 19-2-422 CHANDULAL BARADARI, HYDERABAD 500064, INDIA.	
DATE OF REGISTRATION	09/10/2014
TITLE	PERFUME DISPENSER
PRIORITY NA	

DESIGN NUMBER	267755
CLASS	13-03
1)M/S GM MODULAR PVT. LTD., (A COMPANY INCORPORATED UNDER INDIAN COMPANIES ACT), 14/15, BOKADIA IND. ESTATE, SATIVALI ROAD, VASAI (EAST)-401208, DISTRICT-THANE, MAHARASHTRA (INDIA)	
DATE OF REGISTRATION	27/11/2014
TITLE	SWITCH PLATE
PRIORITY NA	

DESIGN NUMBER	266921
CLASS	14-03
1)M/S GM MODULAR PVT. LTD., (A COMPANY INCORPORATED UNDER INDIAN COMPANIES ACT), 14/15, BOKADIA IND. ESTATE, SATIVALI ROAD, VASAI (EAST)-401208, DISTRICT-THANE, MAHARASHTRA (INDIA)	
DATE OF REGISTRATION	27/10/2014
TITLE	REGULATOR SWITCH
PRIORITY NA	

DESIGN NUMBER	267231
CLASS	12-16
1)DAIWA KASEI KOGYO KABUSHIKI KAISHA, A BODY CORPORATE INCORPORATED UNDER THE LAWS OF JAPAN, HAVING ITS REGISTERED OFFICE AT 1, AZA KAMIHIRACHI, HOBO-CHO, OKAZAKI-SHI, AICHI-KEN, JAPAN	
DATE OF REGISTRATION	07/11/2014
TITLE	CUSHION CLIP

PRIORITY

PRIORITY NUMBER	DATE	COUNTRY
2014-009861	08/05/2014	JAPAN

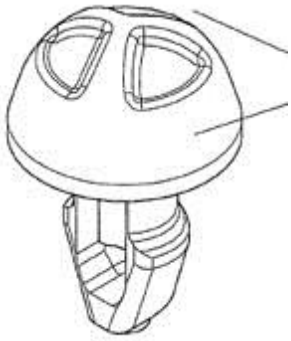

DESIGN NUMBER	267172
CLASS	12-16
1)JOSEPH VÖGELE AG, JOSEPH-VÖGELE-STRASSE 1, 67067 LUDWIGSHAFEN/RHEIN, GERMANY; NATIONALITY: GERMANY	
DATE OF REGISTRATION	03/11/2014
TITLE	CONTROL PANEL FOR A VEHICLE

PRIORITY

PRIORITY NUMBER	DATE	COUNTRY
002539254	17/09/2014	OHIM

DESIGN NUMBER	200673	
CLASS	02-02	
1)KAIZAR MITHAIWALA AND RADHIKA NAIK, AT NO. 6 SEA VIEW TERRACE, 68-71 WODEHOUSE ROAD, COLABA, MUMBAI-400 005, MAHARASHTRA, INDIA,		
DATE OF REGISTRATION	04/08/2005	
TITLE	DRESS	
PRIORITY NA		

DESIGN NUMBER	265215	
CLASS	05-05	
1)M/S. NAKSHATRA CREATIONS PVT. LTD., OF PLOT NO 5511, ROAD NO 55, G.I.D.C., SACHIN, DIST. SURAT-394230 SURAT (GUJARAT) INDIA, AND A COMPANY REGISTERED UNDER THE COMPANY ACT SITUATED AT ABOVE ADDRESS		
DATE OF REGISTRATION	28/08/2014	
TITLE	TEXTILE FABRIC	
PRIORITY NA		

DESIGN NUMBER	266671	
CLASS	06-03	
1)NATIONAL INSTITUTE OF DESIGN LOCATED AT PALDI, AHMEDABAD 380007 GUJARAT, HAVING NATIONALITY AS INDIAN		
DATE OF REGISTRATION	10/10/2014	
TITLE	FOLDABLE TABLE	
PRIORITY NA		

DESIGN NUMBER	267162
CLASS	15-04

1)JOSEPH VÖGELE AG,
JOSEPH-VÖGELE-STRASSE 1, 67067 LUDWIGSHAFEN/RHEIN, GERMANY; NATIONALITY: GERMANY

DATE OF REGISTRATION	03/11/2014
TITLE	ROAD CONSTRUCTION MACHINE

PRIORITY

PRIORITY NUMBER	DATE	COUNTRY
002539254	17/09/2014	EUROPEAN UNION

DESIGN NUMBER	268183
CLASS	07-07

1)M. K. INDUSTRIES, FD-21, TAGORE GARDEN, DELHI-110027, INDIA
(AN INDIAN PROPRIETORSHIP FIRM WHOSE PROPRIETOR IS:- SH. MANOJ ARORA AN INDIAN NATIONAL OF THE ABOVE ADDRESS

DATE OF REGISTRATION	15/12/2014
TITLE	TUB

PRIORITY NA

DESIGN NUMBER	267758
CLASS	13-03

1)M/S GM MODULAR PVT. LTD., (A COMPANY INCORPORATED UNDER INDIAN COMPANIES ACT),
14/15, BOKADIA IND. ESTATE, SATIVALI ROAD, VASAI (EAST)-401208, DISTRICT-THANE, MAHARASHTRA (INDIA)

DATE OF REGISTRATION	27/11/2014
TITLE	SWITCH PLATE

PRIORITY NA

DESIGN NUMBER	266716
CLASS	15-04
1)HARNISCHFEGER TECHNOLOGIES, INC., A COMPANY ORGANIZED UNDER THE LAWS OF THE UNITED STATES OF AMERICA, OF 2751 CENTERVILLE ROAD, SUITE 342, WILMINGTON, DELAWARE 19808, UNITED STATES OF AMERICA	
DATE OF REGISTRATION	15/10/2014
TITLE	CRAWLER TRACK SHOE FOR A CHAIN MOVEMENT ASSEMBLY

PRIORITY

PRIORITY NUMBER	DATE	COUNTRY
29/491,637	22/05/2014	U.S.A.

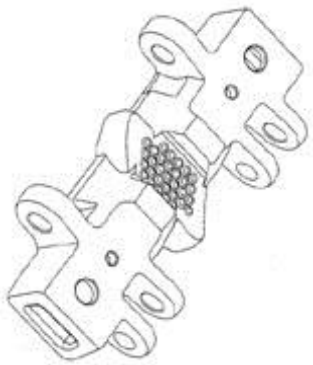

DESIGN NUMBER	266924
CLASS	13-03
1)M/S GM MODULAR PVT. LTD., (A COMPANY INCORPORATED UNDER INDIAN COMPANIES ACT), 14/15, BOKADIA IND. ESTATE, SATIVALI ROAD, VASAI (EAST)-401208, DISTRICT-THANE, MAHARASHTRA (INDIA)	
DATE OF REGISTRATION	27/10/2014
TITLE	WIFI DIMMER
PRIORITY NA	

DESIGN NUMBER	268526
CLASS	15-01
1)JASHWANTLAL P. PANCHAL, INDIVIDUAL, AN INDIAN NATIONAL, PROPRIETOR OF PANCHAL MACHINERY, HAVING ITS OFFICE AT 13, AJAY INDUSTRIAL ESTATE, NEAR WATER TANK, DUDHESHWAR ROAD, DUDHESHWAR, AHMEDABAD-380 004. GUJARAT. INDIA.	
DATE OF REGISTRATION	31/12/2014
TITLE	TWIN SHAFT EXTRUDER GEAR BOX
PRIORITY NA	

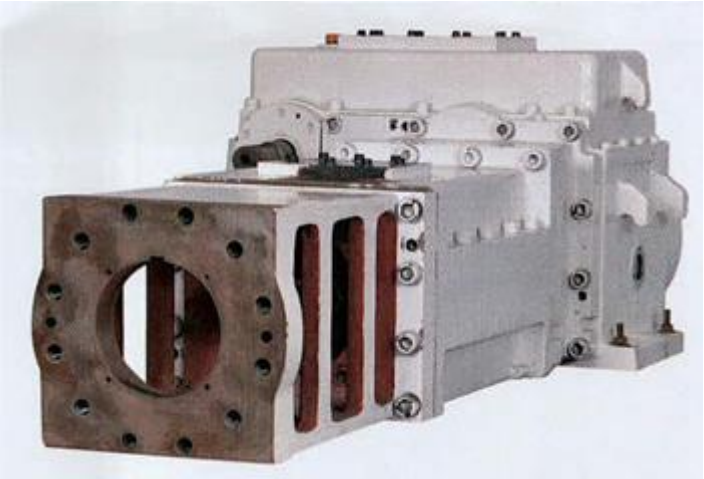

DESIGN NUMBER	261390
CLASS	20-02
1)M/S. TLV PACKAGING SOLUTIONS PRIVATE LIMITED AN INDIAN COMPANY HAVING REGISTERED ADDRESS AT 202, YOLEE BUILDING, NO. 14, POTTERY ROAD, RICHARDS TOWN, BANGALORE-560 005, INDIA	
DATE OF REGISTRATION	31/03/2014
TITLE	STAND FOR SERVING PLATES
PRIORITY NA	

DESIGN NUMBER	267133
CLASS	15-04
1)JOSEPH VÖGELE AG, JOSEPH-VÖGELE-STRASSE 1, 67067 LUDWIGSHAFEN/RHEIN, GERMANY; NATIONALITY: GERMAN	
DATE OF REGISTRATION	31/10/2014
TITLE	BUNKER FOR A ROAD CONSTRUCTION MACHINE

PRIORITY

PRIORITY NUMBER	DATE	COUNTRY
002539254	17/09/2014	EUROPEAN UNION

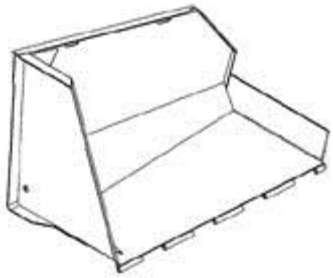

DESIGN NUMBER	267175
CLASS	15-04
1)JOSEPH VÖGELE AG, JOSEPH-VÖGELE-STRASSE 1, 67067 LUDWIGSHAFEN/RHEIN, GERMANY; NATIONALITY: GERMANY	
DATE OF REGISTRATION	03/11/2014
TITLE	ROAD CONSTRUCTION MACHINE

PRIORITY

PRIORITY NUMBER	DATE	COUNTRY
002539254	17/09/2014	OHIM

DESIGN NUMBER	200683	
CLASS	02-04	
1)ANAND PLASTIC INDUSTRIES, 18/B, INDUSTRIAL AREA, TIFRA, BILASPUR,(CHATTISH GARH), INDIA		
DATE OF REGISTRATION	05/08/2005	
TITLE	FOOTWEAR	
PRIORITY NA		