पेटेंट कार्यालय
शासकीय जर्नल

OFFICIAL JOURNAL
OF
THE PATENT OFFICE

निर्गमन सं. 21/2015	शुक्रवार	दिनांक: 22/05/2015
ISSUE NO. 21/2015	FRIDAY	DATE: 22/05/2015

पेटेंट कार्यालय का एक प्रकाशन

PUBLICATION OF THE PATENT OFFICE

INTRODUCTION

In view of the recent amendment made in the Patents Act, 1970 by the Patents (Amendment) Act, 2005 effective from 01st January 2005, the Official Journal of The Patent Office is required to be published under the Statute. This Journal is being published on weekly basis on every Friday covering the various proceedings on Patents as required according to the provision of Section 145 of the Patents Act 1970. All the enquiries on this Official Journal and other information as required by the public should be addressed to the Controller General of Patents, Designs & Trade Marks. Suggestions and comments are requested from all quarters so that the content can be enriched.

(Rajiv Aggarwal)
CONTROLLER GENERAL OF PATENTS, DESIGNS & TRADE MARKS

22ND MAY, 2015

CONTENTS

THE PATENT OFFICE
KOLKATA, 22/05/2015
Address of the Patent Offices/Jurisdictions
The following are addresses of all the Patent Offices located at different places having their Territorial Jurisdiction on a Zonal basis as shown below:-

1	Office of the Controller General of Patents, Designs & Trade Marks, Boudhik Sampada Bhavan, Near Antop Hill Post Office,S.M.Road,Antop Hill, Mumbai – 400 037 Phone: (91)(22) 24123311, Fax : (91)(22) 24123322 E-mail: cgpdtm@nic.in	4	The Patent Office, Government of India, Intellectual Property Rights Building, G.S.T. Road, Guindy, Chennai – 600 032. Phone: (91)(44) 2250 2081-84 Fax : (91)(44) 2250 2066 E-mail: chennai-patent@nic.in ❖ The States of Andhra Pradesh, Telangana, Karnataka, Kerala, Tamil Nadu and the Union Territories of Puducherry and Lakshadweep.
2	The Patent Office, Government of India, Boudhik Sampada Bhavan, Near Antop Hill Post Office,S.M.Road,Antop Hill, Mumbai – 400 037 Phone: (91)(22) 24137701 Fax: (91)(22) 24130387 E-mail: mumbai-patent@nic.in ❖ The States of Gujarat, Maharashtra, Madhya Pradesh, Goa and Chhattisgarh and the Union Territories of Daman and Diu & Dadra and Nagar Haveli	5	The Patent Office (Head Office), Government of India, Boudhik Sampada Bhavan, CP-2, Sector –V, Salt Lake City, Kolkata- 700 091 Phone: (91)(33) 2367 1943/44/45/46/87 Fax: (91)(33) 2367 1988 E-Mail: kolkata-patent@nic.in ❖ Rest of India
3	The Patent Office, Government of India, Boudhik Sampada Bhavan, Plot No. 32., Sector-14, Dwarka, New Delhi – 110075 Phone: (91)(11) 2808 1921 – 25 Fax: (91)(11) 2808 1920 & 2808 1940 E.mail: delhi-patent@nic.in ❖ The States of Haryana, Himachal Pradesh, Jammu and Kashmir, Punjab, Rajasthan, Uttar Pradesh, Uttaranchal, Delhi and the Union Territory of Chandigarh.		

Website: www.ipindia.nic.in
www.patentoffice.nic.in

All applications, notices, statements or other documents or any fees required by the Patents Act, 1970 and The Patents (Amendment) Act, 2005 or by the Patents (Amendment) Rules, 2006 will be received only at the appropriate offices of the Patent Office.

Fees: The Fees may either be paid in cash or may be sent by Bank Draft or Cheques payable to the Controller of Patents drawn on a scheduled Bank at the place where the appropriate office is situated.

पेटेंट कार्यालय

कोलकाता, दिनांक 22/05/2015

□कार्यालयों के क्षेत्राधिकार के पते

विभिन्न जगहों पर स्थित पेटेंट कार्यालय के पते आंचलिक आधार पर दर्शित उनके प्रादेशिक अधिकार क्षेत्र के साथ नीचे दिए गए है:-

1	कार्यालय : महानियंत्रक, एकस्व, अभिकल्प तथा व्यापार चिहन, एंटोप हिल डाकघर के समीप, एस. एम. रोड, एंटोप हिल, मुम्बई- 400 037, भारत, फोन: (91) (22) 24123311 फ़ैक्स: (91) (22) 24123322 ई. मेल: cgpdtm@nic.in	4	पेटेंट कार्यालय, भारत सरकार इंटेलेक्चुअल प्रॉपर्टी राइट्स बिल्डिंग, इंडस्ट्रियल इस्टेट एसआईडीसीओ आरएमडी गोडाउन एरिया एडजसेन्ट टु ईगल फ्लास्क, जी. एस. टी. रोड, गायन्डी चेन्नई - 600 032. फोन: (91)(44) 2250 2081-84 फ़ैक्स: (91)(44) 2250-2066 ई. मेल: chennai-patent@nic.in ❖ आन्ध्र प्रदेश, तेलंगाना, कर्नाटक, केरल, तमिलनाडु तथा पुडुचेरी राज्य क्षेत्र एवं संघ शासित क्षेत्र, लक्षदीप
2	पेटेंट कार्यालय, भारत सरकार बौद्धिक संपदा भवन, एंटोप हिल डाकघर के समीप, एस. एम. रोड, एंटोप हिल, मुम्बई- 400 037, फोन: (91) (22) 24137701 फ़ैक्स: (91) (22) 24130387 ई. मेल: Mumbai-patent@nic.in ❖ □गुजरात, महाराष्ट्र, मध्य प्रदेश, गोवा तथा छत्तीसगढ़ राज्य क्षेत्र एवं संघ शासित क्षेत्र, दमन तथा दीव, दादर और नगर हवेली•	5	पेटेंट कार्यालय, भारत सरकार कोलकाता, (प्रधान कार्यालय) बौद्धिक संपदा भवन, सीपी-2, सेक्टर- V, साल्ट लेक सिटी, कोलकाता-700 091, भारत. फोन: (91)(33) 2367 1943/44/45/46/87 फ़ैक्स:/Fax: (91)(33) 2367 1988 ई. मेल: kolkata-patent@nic.in ❖ भारत का अवशेष क्षेत्र
3	पेटेंट कार्यालय, भारत सरकार बौद्धिक संपदा भवन, प्लॉट सं. 32, सेक्टर- 14, द्वारका, नई दिल्ली- 110 075. फोन: (91)(11) 2808 1921-25 फ़ैक्स: (91)(11) 2808 1920, 2808 1940 ई. मेल: delhi-patent@nic.in हरियाणा, हिमाचल प्रदेश, जम्मू तथा कश्मीर, पंजाब,राजस्थान, उत्तर प्रदेश, दिल्ली तथा उत्तरांचल राज्य क्षेत्रों, एवं संघ शासित क्षेत्र चंडीगढ़		

वेबसाइट: http://www.ipindia.nic.in

www.patentoffice.nic.in

पेटेंट अधिनियम, 1970 तथा पेटेंट (संशोधन) अधिनियम, 2005 अथवा पेटेंट (संशोधन) नियम, 2006 द्वारा वांछित सभी आवेदन, सूचनाए, विवरण या अन्य दस्तावेज़ या कोई शुल्क पेटेंट कार्यालय के केवल उपयुक्त कार्यालय में स्वीकृत होंगे।

शुल्क: शुल्क या तो नगद रूप में या Controller of Patents के नाम में देय बैंक ड्राफ्ट या चेक के द्वारा भेजी जा सकती है जो उसी स्थान के किसी अनुसूचित बैंक में प्रदत्त हो जहाँ उपयुक्त कार्यालय स्थित है ।

SPECIAL NOTICE

18 Months publication as required under Section 11A of the Patents Act, 1970 as amended by the Patents (Amendment) Act, 2005.

Notice is hereby given that any person at any time before the grant of Patent may give representation by way of opposition to the Controller of Patents at appropriate office on the ground and in a manner specified under section 25(1) of the Patents (Amendment) Act, 2005 read with Rule 55 of the Patents (Amendment) Rules, 2006.

Notice is also given that if any interested person requests for copies of the complete specification, drawing and abstract of any application already published, the photocopy of the same can be supplied by the Patent Office as per the jurisdiction on payment of prescribed fees of Rs.8/- per page. If any further details are required to be obtained, the same can be provided by the respective Patent Offices on request.

(Rajiv Aggarwal)
CONTROLLER GENERAL OF PATENTS, DESIGNS & TRADE MARKS

SPECIAL NOTICE

Under the new provision of the Patents Act, 1970 as amended by the Patents (Amendment) Act, 2005 and Rules there under, Publication of the matter relating to Patents in the Official Gazette of India Part III, Section 2 has been discontinued and instead The Official Journal of the Patent Office is being published containing all the activities of The Patent Office such as publication of all the patent applications after 18th months , grant of patents & all other information in respect of the proceedings as required under the provisions of the Patents (Amendment) Act, 2005 and Rules thereunder on weekly basis on every **Friday**.

The Journal is uploaded in the website every Friday. So Paper form and CD-ROM form of the Journal are discontinued from 01/01/2009.

SPECIAL NOTICE

Every effort is being taken to publish all the patent applications under section 11(A) of the Patents Act. However, if duplication of publication of any application is found, then earlier date of publication will be taken for the purpose of provisional protection for applicant and Patent Office will grant Patent not before six months from the date of second publication, provided that there is there is no third party representation.

NOTICE OF OFFER TO SURRENDER A PATENT UNDER SECTION 63 OF THE PATENTS ACT, 1970

Patent No. 216922 granted on March 20,2008
Application No. 1689IDELNPl2005
Dated April 26,2005
Title: Solenoid
Patentee: Shinano Kenshi Kabushiki Kaisha

On behalf of the Patentee Shinano Kenshi Kabushki Kaisha, a company organized and existing under the laws of Japan, of the address 1078, Kamimaruko, Ueda-shi, Nagano 386-.0498, Japan (earlier at 1078, Ooaza Kamimaruko, Maruko-machi, Chiisagata-gun, Nagano 386-0498, Japan) Patent No. 216922 granted on March 20, 2008 (Application No. 1689/DELNP/2005 dated April 26,2005 entitled Solenoid

We would like to submit the following:

That the aforesaid patent was granted on March 20,2008.

That the aforesaid patent is renewed up to October 20,2016

That the patentee does not wish to continue the said patent and offer to surrender the patent.
In the light of the above circumstance, we are filing request under Section 63 for surrender of patent. We humbly request the Hon'ble Controller General of Patents to kindly allow the said offer regarding surrender of Patent.

Early Publication:

The following patent applications have been published under section 11A (2) of The Patents (Amendment) Act 2005 and rule 24A of The Patents (Amendment) Rules, 2006. Any person may file representation by way of opposition to the Controller of Patents at the appropriate office against the grant of the patent in the prescribed manner under section 25(1) of the Patents (Amendment) Act 2005 read with the rule 55 of The Patents (Amendment) Rules, 2006:

(12) PATENT APPLICATION PUBLICATION

(21) Application No.5860/DELNP/2014 A

(19) INDIA

(22) Date of filing of Application :14/07/2014

(43) Publication Date : 22/05/2015

(54) Title of the invention : UTILITY VEHICLE AND CONTROL METHOD FOR UTILITY VEHICLE

(51) International classification	:F01N3/08,F01P3/12,F01P7/04
(31) Priority Document No	:NA
(32) Priority Date	:NA
(33) Name of priority country	:NA
(86) International Application No	:PCT/JP2014/063067
Filing Date	:16/05/2014
(87) International Publication No	:WO 2014/185520
(61) Patent of Addition to Application Number	:NA
Filing Date	:NA
(62) Divisional to Application Number	:NA
Filing Date	:NA

(71)**Name of Applicant :**
1)KOMATSU LTD.
Address of Applicant :2 3 6 Akasaka Minato ku Tokyo 1078414 Japan
(72)**Name of Inventor :**
1)ASHITAKA Masanori

(57) Abstract :
A utility vehicle provided with: a reducing agent tank that stores a reducing agent to be supplied to an exhaust gas purification device that purifies nitrogen oxides in exhaust gas; an engine coolant circuit that includes a pump that circulates in a circulation passage engine coolant for cooling the engine; a branched passage that branches off from the circulation passage and that is provided so as to use the engine coolant to exchange heat with the reducing agent inside the reducing agent tank; a valve that controls the supply of the engine coolant to the branched passage; a valve control unit that instructs the opening of the valve in accordance with an operational instruction from the operator; a fan that generates a cooling airflow in the engine compartment; a radiator that uses the cooling air to cool the engine coolant; a thermostat that is provided between the circulation passage and the radiator and that opens to allow the supply of engine coolant to the radiator when the temperature of the engine coolant reaches a prescribed temperature or higher; and a fan control unit that increases the rotational speed of the fan in accordance with an operational instruction from the operator.

No. of Pages : 45 No. of Claims : 8

(12) PATENT APPLICATION PUBLICATION
(21) Application No.6698/DELNP/2014 A
(19) INDIA
(22) Date of filing of Application :08/08/2014
(43) Publication Date : 22/05/2015

(54) Title of the invention : WORK VEHICLE

(51) International classification :B60H1/32
(31) Priority Document No :NA
(32) Priority Date :NA
(33) Name of priority country :NA
(86) International Application No :PCT/JP2014/062838
Filing Date :14/05/2014
(87) International Publication No :WO 2014/192545
(61) Patent of Addition to Application Number :NA
Filing Date :NA
(62) Divisional to Application Number :NA
Filing Date :NA

(71)**Name of Applicant :**
1)KOMATSU LTD.
Address of Applicant :2 3 6 Akasaka Minato ku Tokyo 1078414 Japan
(72)**Name of Inventor :**
1)HOSHIYA Masahiko
2)HAYASHI Youichi
3)IGARASHI Yuusuke
4)YOSHIOKA Shunsuke

(57) Abstract :
A work vehicle conforming to one aspect of the present invention is provided with a condenser a fan a changing mechanism a fan control unit an outside air temperature sensor and a storage unit. The condenser cools a refrigerant that is used in an air conditioner. The fan cools the condenser. The changing mechanism is capable of changing the rotational speed of the fan. The fan control unit controls the changing mechanism. The outside air temperature sensor detects the outside air temperature. The storage unit stores a plurality of control maps for setting the different rotational speeds of the fan in accordance with the outside air temperature detected by the outside air temperature sensor. The fan control unit controls the rotational speed of the fan by controlling the changing mechanism in accordance with one control map selected from among the plurality of control maps stored in the storage unit on the basis of the operating state of the air conditioner.

No. of Pages : 34 No. of Claims : 7

(12) PATENT APPLICATION PUBLICATION
(19) INDIA
(22) Date of filing of Application :16/03/2015
(21) Application No.701/DEL/2015 A
(43) Publication Date : 22/05/2015

(54) Title of the invention : SMART ANDROID BASED SECURITY SYSTEM

(51) International classification	:H04N7/18, H04N21/6437
(31) Priority Document No	:NA
(32) Priority Date	:NA
(33) Name of priority country	:NA
(86) International Application No	:NA
Filing Date	:NA
(87) International Publication No	: NA
(61) Patent of Addition to Application Number	:NA
Filing Date	:NA
(62) Divisional to Application Number	:NA
Filing Date	:NA

(71)**Name of Applicant :**
1)HOD (ECS), DRONACHARYA COLLEGE OF ENGINEERING
Address of Applicant :KHENTAWAS, FARRUKHNAGAR GURGAON-123506 Haryana India
(72)**Name of Inventor :**
1)DR. NEELAMRUHIL
2)CHANDRA MUKHERJEE

(57) Abstract :
Closed Circuit cameras and smart security systems at the main gates of the homes which eventually have the facility of recording all day videos and also live video streaming to the indoor unit that also allows locking and unlocking of the door. Most of the societies have a guard at the main gate to keep a record of people coming in and out of the society but there is no such system for independent houses or simply the flats inside the societies. Most of us cannot afford a personal guard as well. The objective of this project is to provide a basic and a cheaper solution as compared to the cctv cameras and expensive security systems offered by various. companies, which would be an android device in sync with the Google account and Watsapp in turn with an app that is tuned in with the doorbell and connected to a secretly placed wireless camera (at the main .gate) which clicks a picture of the visitor whenever the doorbell is pressed by the visitor. This would provide a photographic data log of people entering in and out of the house.

No. of Pages : 6 No. of Claims : 5

(12) PATENT APPLICATION PUBLICATION
(19) INDIA
(22) Date of filing of Application :17/09/2014
(21) Application No.2669/DEL/2014 A
(43) Publication Date : 22/05/2015

(54) Title of the invention : SOIL BASED BRICK MIXED WITH LIME MUD - AN INDUSTRIAL WASTE OF PAPER MILL

(51) International classification	:C04B28/20, C04B28/00
(31) Priority Document No	:NA
(32) Priority Date	:NA
(33) Name of priority country	:NA
(86) International Application No	:NA
Filing Date	:NA
(87) International Publication No	: NA
(61) Patent of Addition to Application Number	:NA
Filing Date	:NA
(62) Divisional to Application Number	:NA
Filing Date	:NA

(71)**Name of Applicant :**
1)DR. RAJU SARKAR
Address of Applicant :DEPARTMENT OF CIVIL ENGINEERING DELHI TECHNOLOGICAL UNIVERSITY BAWANA ROAD, DELHI - 110042 Delhi India
2)A. K. GUPTA
3)SHUBHAM GARG
4)PULKIT AGRAWAL
(72)**Name of Inventor :**
1)DR. RAJU SARKAR
2)A. K. GUPTA
3)SHUBHAM GARG
4)PULKIT AGRAWAL

(57) Abstract :
The purpose of the present invention i.e. manufacture of brick from waste material of paper manufacturing industry and locally available soil. This invention will help to reduce the disposal problem, environmental effects of this waste and manufacture a new building material. The materials used for brick making in this study are lime mud, the waste of paper industry, and soil. The materials were characterized with respect to its chemical and geotechnical properties. Then the experiments were conducted on hand moulded burnt bricks of above mix in various proportions to determine the optimum mix. All the bricks were first dried in the natural condition and then putted the dry bricks in kiln for burning. After burning, all bricks are tested to determine the compressive strength.

No. of Pages : 13 No. of Claims : 1

(12) PATENT APPLICATION PUBLICATION
(21) Application No.6602/DELNP/2014 A
(19) INDIA
(22) Date of filing of Application :06/08/2014
(43) Publication Date : 22/05/2015

(54) Title of the invention : UTILITY VEHICLE

(51) International classification :E02F9/08
(31) Priority Document No :NA
(32) Priority Date :NA
(33) Name of priority country :NA
(86) International Application No :PCT/JP2014/064437
Filing Date :30/05/2014
(87) International Publication No :WO 2014/192924
(61) Patent of Addition to Application Number :NA
Filing Date :NA
(62) Divisional to Application Number :NA
Filing Date :NA

(71)**Name of Applicant :**
1)KOMATSU LTD.
Address of Applicant :2 3 6 Akasaka Minato ku Tokyo 1078414 Japan
(72)**Name of Inventor :**
1)SANADA Kenji

(57) Abstract :
This hydraulic shovel is provided with a vehicle body frame a hydraulic oil tank cover an engaging member an insertion plate an engagement member a receiving part and a bolt. The hydraulic oil tank cover covers a side surface of the vehicle body frame. The engaging member is provided on the rear surface side of the hydraulic oil tank cover so as to be at the top when in an attached state in which the hydraulic oil tank cover is attached to the vehicle body frame. The insertion plate is provided on the rear surface side of the hydraulic oil tank cover so as to be at the bottom when in the attached state and is oriented in a substantially vertical direction. The engagement member is provided to the vehicle body frame is engaged by the engaging member and supports the hydraulic oil tank cover. The receiving part is provided to the vehicle body frame and accommodates the insertion of the insertion plate along the substantially vertical direction. An affixing part is provided at a position further to the inside of the vehicle body than the upper end of the outer cover when in the attached state and viewed from above and affixes the engaging member to the engagement member.

No. of Pages : 55 No. of Claims : 7

(12) PATENT APPLICATION PUBLICATION
(19) INDIA
(22) Date of filing of Application :16/04/2014
(21) Application No.1369/MUM/2014 A
(43) Publication Date : 22/05/2015

(54) Title of the invention : OSTEOINDUCTIVE FORMULATION AND PREPARATION THEREOF

(51) International classification	:A61K 38/00, A61K35/14
(31) Priority Document No	:NA
(32) Priority Date	:NA
(33) Name of priority country	:NA
(86) International Application No	:NA
Filing Date	:NA
(87) International Publication No	: NA
(61) Patent of Addition to Application Number	:NA
Filing Date	:NA
(62) Divisional to Application Number	:NA
Filing Date	:NA

(71)**Name of Applicant :**
1)DR. PRADEEP V. MAHAJAN
Address of Applicant :R-831, T.T.C., THANE BELAPUR ROAD, RABALE, NAVI MUMBAI-400708 Maharashtra India
(72)**Name of Inventor :**
1)DR. PRADEEP V. MAHAJAN

(57) Abstract :
The invention provides an autologous stem cell containing osteoinductive formulation useful for healing bone injuries and its method of preparation. The osteoinductive formulation described for healing the bone injuries is a combination of autologous mesenchymal and hematopoietic stem cells, platelet rich plasma containing mononuclear cells with growth factors and scaffolding compounds. Mesenchymal and hematopoietic stem cells used in the osteoinductive formulation are isolated from bone marrow and/or adipose tissue. Platelet rich plasma containing mononuclear cells with growth factors is isolated from peripheral blood. The invention also provides a Minimal/Non-invasive procedure for the treatment of Avascular Necrosis by administrating the osteoinductive formulation.

No. of Pages : 25 No. of Claims : 47

(12) PATENT APPLICATION PUBLICATION
(21) Application No.1845/MUM/2015 A
(19) INDIA
(22) Date of filing of Application :11/05/2015
(43) Publication Date : 22/05/2015

(54) Title of the invention : PROCESS FOR DESIGN OF DISPERSION COMPENSATING FIBER BASED ON LP 11 MODE FOR WDM OPTICAL TRANSMISSION SYSTEM

(51) International classification	:H04B10/18, G02B6/26, G02B6/14	(71)**Name of Applicant :** **1)DR. ADITYA GOEL,** Address of Applicant :HOUSE NO. 4, G-1 SECTOR, GULMOHAR COLONY, E-8, BHOPAL-462039, MADHYA PRADESH, INDIA. **2)MR. GAURAV PANDEY**
(31) Priority Document No	:NA	
(32) Priority Date	:NA	
(33) Name of priority country	:NA	
(86) International Application No	:NA	(72)**Name of Inventor :** **1)DR. ADITYA GOEL** **2)MR. GAURAV PANDEY**
Filing Date	:NA	
(87) International Publication No	: NA	
(61) Patent of Addition to Application Number	:NA	
Filing Date	:NA	
(62) Divisional to Application Number	:NA	
Filing Date	:NA	

(57) Abstract :
The field of invention relates to an optimal dispersion compensating optical fiber (DCF) based on the higher order LP11 mode which when used in wavelength division multiplexing system comprising of conventional single mode fiber (CSMF) coupled with DCF of the present invention, exhibits a residual dispersion of <| 2.189! ps/nm per 100 km of CSMF over the entire wavelength span ranging from 1500 nm to 1600 nm (100 nm). The core of the said fiber (DCF) has four segments with varying R. I. Profile comprising of: core segment having positive R. I. Δ1, inner trench segment having negative R. I. Δ2, ring core having positive R. I. Δ3, outer trench having negative R. I. A4 which are radially adjacent to each other, and then a cladding with a constant index profile satisfying the condition |Δ1| >|Δ2| >|Δ3| >|Δ4| >|Δ5|. Two mode converters are employed at both ends of the said fiber where the first mode converter preceeding DCF converts LP01 to LPn mode and second mode converter succeeding DCF converts the LP11 mode to LP 01 mode so that the LPn mode always remains in said DCF of present invention. The optimized R. I. profile of the DCF when operated over the wide wavelength span of 100 nm exhibits the chromatic dispersion ranging from -260 ps/nm-km to -390 ps/nm-km (approx.) with negative dispersion slope in particular and effective area > 45 (am2. Further the designed DCF generates a PZD ranging from 1288 to 1292 nm over the entire spectral range varying from 1500 nm to 1600 nm (100 nm) with a typical value of 1288 nm at 1550 nm wavelength therby ideally suitable for compensating the dispersion of CSMF exhibiting a PZD value of 1260 nm at 1550 nm wavelength. The designed DCF in particular exhibits following typical values at 1550 nm wavelength: dispersion = -327.5 ps/nm-km, dispersion slope = -1.25 ps/nm /km, kappa = 262 nm, PZD = 1288 nm and Figure of merit =1731 ps/(nm-dB). Moreover the said optimally designed DCF is further capable of reducing the overall existing dispersion from 18.62 ps/nm-km to < l 0.45| ps/nm-km, when it is concatenated with the existing CSMF in a length ratio of 1: 20.56 over the entire wavelength span ranging from 1500 to 1600 nm.

No. of Pages : 33 No. of Claims : 10

(12) PATENT APPLICATION PUBLICATION
(21) Application No.3712/MUM/2014 A
(19) INDIA
(22) Date of filing of Application :24/11/2014
(43) Publication Date : 22/05/2015

(54) Title of the invention : PLUG-IN TYPE WIRELESS ADAPTER FOR ENERGY MONITORING & APPLIANCE CONTROL FOR DEMAND SIDE ENERGY MANAGEMENT

(51) International classification	:H02J3/14, H02J1/00, G06F19/00	(71)**Name of Applicant :**
(31) Priority Document No	:NA	**1)DIVYANG DINESHKUMAR VYAS**
(32) Priority Date	:NA	Address of Applicant :SHANTI SADAN, 6-PRAGATI SOCIETY, B/H VIMANAGAR, RAIYA ROAD, RAJKOT-360007, GUJARAT, INDIA.
(33) Name of priority country	:NA	**2)HARESH NATWARLAL PANDYA**
(86) International Application No	:NA	(72)**Name of Inventor :**
Filing Date	:NA	**1)DIVYANG DINESHKUMAR VYAS**
(87) International Publication No	: NA	**2)HARESH NATWARLAL PANDYA**
(61) Patent of Addition to Application Number	:NA	
Filing Date	:NA	
(62) Divisional to Application Number	:NA	
Filing Date	:NA	

(57) Abstract :
Plug-in Type Wireless Adapter for Energy Monitoring & Appliance Control for Demand Side Energy Management Increasing demand of electrical energy and its rising prices have enforced the need of managing usage of electrical energy more efficiently. Concepts of demand-side energy management (DSM) programs are becoming popular for efficient energy management in context to smart grid implementation. One of the possible solutions for such implementation at consumer premises is Home Energy Management System (HEMS). However, this requires home appliances to have capability of monitoring and controlling its own energy flow as well as capability of connecting to a network for communicating information. Such features are missing in the current setup at consumer premises. The purpose of the invention is to design a plug-in type adapter that when interfaced with any single phase home appliance gives capability of accurately measuring energy and related parameters in real time, communicating measured values to central unit over wireless link and controlling ON/OFF action of the appliance on command from central unit. The- inventions also demonstrates that such plug-in type adapters when used in plurality along with central unit forms a home area network that can be used to implement DSM programs for efficient energy management. The invention is aimed to be low cost and easy to use. The plug-in type adapter is primarily a microcontroller based module interfaced with IEC 687/1036 international standards compliant power/energy monitoring module. A wireless link between adapter and central unit is established using a Bluetooth module. Serial EEPROM is also included in the design to store data locally at device level. A normal Desktop PC interfaced with a Bluetooth module acts as a Central unit. Central unit hosts a graphical user interface (GUI) based application that allows user to monitor and control appliances as well as record information received from them. Similar applications can also be designed for laptops and smart phones as most of them inherently support Bluetooth communication.

No. of Pages : 17 No. of Claims : 9

(12) PATENT APPLICATION PUBLICATION
(19) INDIA
(22) Date of filing of Application :14/02/2014
(21) Application No.521/MUM/2014 A
(43) Publication Date : 22/05/2015

(54) Title of the invention : EMBEDDING AND LAYING OF EPDM OR ANY OTHER FLEXIBLE MEMBRANE IN CONCRETE.

(51) International classification	:E01C23/00,E04D13/17	(71)**Name of Applicant :**
(31) Priority Document No	:NA	**1)DEEPAK BALWANI**
(32) Priority Date	:NA	Address of Applicant :E-4/249, ARERA COLONY, BHOPAL (M.P.),INDIA Madhya Pradesh India
(33) Name of priority country	:NA	(72)**Name of Inventor :**
(86) International Application No	:NA	**1)DEEPAK BALWANI**
Filing Date	:NA	
(87) International Publication No	: NA	
(61) Patent of Addition to Application Number	:NA	
Filing Date	:NA	
(62) Divisional to Application Number	:NA	
Filing Date	:NA	

(57) Abstract :
Embedding and laying of EPDM or any other flexible membrane in concrete. The present invention relates to the technology of the Embedding and Laying of EPDM or any other flexible membrane in concrete and is designed to make expansion joints absolutely watertight in Bridge, Building or any other structure where expansion joints is provided due to thermal and seismic effects. The present invention pertains to an innovative method of fixing EPDM membrane or any other Flexible membrane by a binding wire which is used to make absolute watertight Expansion joints in civil structure. The present invention relates to a novel simple binding wire is used to tie up EPDM membrane or any other flexible membrane with slab reinforcement and once the concreting is done after fixing the EPDM membranes or any other flexible membrane and slab reinforcement with binding wire, the joint will become absolute water tight.

No. of Pages : 12 No. of Claims : 3

(12) PATENT APPLICATION PUBLICATION
(19) INDIA
(22) Date of filing of Application :27/03/2015
(21) Application No.1076/MUM/2015 A
(43) Publication Date : 22/05/2015

(54) Title of the invention : ERGONOMIC ADJUSTABLE TABLE TOP

(51) International classification	:A47F5/12, A47B 9/00
(31) Priority Document No	:NA
(32) Priority Date	:NA
(33) Name of priority country	:NA
(86) International Application No	:NA
Filing Date	:NA
(87) International Publication No	: NA
(61) Patent of Addition to Application Number	:NA
Filing Date	:NA
(62) Divisional to Application Number	:NA
Filing Date	:NA

(71)**Name of Applicant :**
1)M. NEMATULLAH NASIM
Address of Applicant :ACET, SADAR, NAGPUR Maharashtra India
(72)**Name of Inventor :**
1)M. NEMATULLAH NASIM
2)M. SOHAIL PERVEZ
3)M. WAJAHATULLAH NASIM

(57) Abstract :
Today, corporate work spaces are ergonomically designed, which simply means body-friendly. Ergonomics is very important when it comes to sewing since poor posture and awkward positions of users result in early fatigue and pains in the shoulders, neck and back. Sewing, cutting and ironing in positions for long time that tax users also lead to chronic ache and/or serious conditions of the spine. To avoid these bad effects the sewer must be provided the sewing machine having working-table-top at proper height and inclination. These features are especially important for short as well as tall persons. There is a distinct difference between the sewing surface (needle area) height and the sewing table height particularly with free-arm machines. If the machine is placed into a table or a cabinet, the sewing surface and table height are one and the same. And if the machine is placed on top of a table, then the sewing table height is lower than the sewing surface (needle area) height. It is advisable that the user must find the proper sewing surface height to begin with and then raise or lower the table or cabinet to bring the needle area at that height. To find the proper sewing surface height the user must sit in his chair holding a magazine in front of his eyes and try to read it. The height at which he can read the magazine comfortably is the correct height of sewing surface. After doing so, he must measure the distance between his elbow and the floor and add 5.5 to 7 to it to take care of the changed position of hands which must rest on sewing surface while doing sewing operation in which his hands should be in line with his wrists and forearms with no forward bent. This exercise will also give him the angle at which the sewing surface should be tilted. A properly adjusted workstation is essential to prevent so called ergonomic injury in any job. A properly adjusted sewing surface, in a way described above, provides enough room beneath the sewers legs without exerting any pressure on his thighs, a clear view of the progressive sewing work with absolutely no hunching and complete ease in pedalling operation also.

No. of Pages : 6 No. of Claims : 9

(12) PATENT APPLICATION PUBLICATION
(21) Application No.2936/MUM/2014 A
(19) INDIA
(22) Date of filing of Application :15/09/2014
(43) Publication Date : 22/05/2015

(54) Title of the invention : SNOWY CARE'S HAIR COIL

(51) International classification	:A61K 36/889, A61Q 5/00
(31) Priority Document No	:NA
(32) Priority Date	:NA
(33) Name of priority country	:NA
(86) International Application No	:NA
Filing Date	:NA
(87) International Publication No	: NA
(61) Patent of Addition to Application Number	:NA
Filing Date	:NA
(62) Divisional to Application Number	:NA
Filing Date	:NA

(71)**Name of Applicant :**
1)MS. PRIYANKA GEORGE
Address of Applicant :SHREE SHARAD CHS LTD, FLAT NO-401, PLOT NO-1, CTS NO-194-A, NEAR NATH PAI NAGAR, OFF EE HIGHWAY, GHATKOPAR (E), MUMBAI - 400 077 Maharashtra India
(72)**Name of Inventor :**
1)MS. PRIYANKA GEORGE

(57) Abstract :
An improved hair oil composition comprising Cocos Nucifera (Coconut Oil)- 88ml, Citriodora oil 10 ml, Lavundula oil 2 ml and Pelargonium graveolen oil 1ml. The process of preparing improved hair oil composition as Mixing 88 ml of Cocos Nucifera (Coconut Oil) with 10 ml of Citriodora oil and gently shaking to form homogeneous composition and allowed to settle for 10 minutes and by adding 2 ml of Lavundula oil and 1 ml of Pelargonium graveolen to the above mixture to form the composition.

No. of Pages : 12 No. of Claims : 2

(12) PATENT APPLICATION PUBLICATION
(21) Application No.3191/MUM/2014 A
(19) INDIA
(22) Date of filing of Application :08/10/2014
(43) Publication Date : 22/05/2015

(54) Title of the invention : DC DRIVE KIT AS AN ENERGY SAVING & SOLAR POWER ATTACHMENT FOR HANDLOOMS, EVAPORATIVE AIR COOLERS AND OTHER EQUIPMENTS.

(51) International classification	:F21S 11/00, F28D 5/00
(31) Priority Document No	:NA
(32) Priority Date	:NA
(33) Name of priority country	:NA
(86) International Application No	:NA
Filing Date	:NA
(87) International Publication No	: NA
(61) Patent of Addition to Application Number	:NA
Filing Date	:NA
(62) Divisional to Application Number	:NA
Filing Date	:NA

(71)**Name of Applicant :**
1)RAJESH VASUDEV GULHANE
Address of Applicant :NAMUNA LANE NO.2, GANDHI CHOWK, AMRAVATI, PIN CODE:- 444601, MAHARASHTRA, INDIA
(72)**Name of Inventor :**
1)RAJESH VASUDEV GULHANE

(57) Abstract :
This invention relates to a DC drive kit to be mounted on handloom and evaporative air coolers to operate them at higher productivity and energy efficiency on grid power supply and to facilitate direct coupling of solar / battery systems in a viable way. The handlooms are manually operated and involve lot of drudgery with very low income and are mostly placed in villages hence inclusion of electric power for its operation is formidable because of erratic supply of electricity in villages. The DC drive kit for handloom is designed to operate at aboutl50 Watts. Other equipment includes the evaporative air coolers that are widely used in all parts of the country and in rural areas where there are huge power cuts hence conceptualization of DC solar powered cooler or with power backups from batteries and grid power is the need of the hour. The conventional evaporative air cooler fitted with the DC drive kit that operates on a very low power requirement (30-80 W) hence the cooler can be operated on a solar PV (60 -150 W) as a highly power saving device. Use of solar energy for above such applications means decreasing the amount of energy used while achieving a similar outcome of end use. Therefore, using solar energy helps us to preserve natural resources and make them last longer in the future.

No. of Pages : 12 No. of Claims : 3

(12) PATENT APPLICATION PUBLICATION
(21) Application No.664/MUM/2015 A
(19) INDIA
(22) Date of filing of Application :28/02/2015
(43) Publication Date : 22/05/2015

(54) Title of the invention : A NOVEL ARTIFICIAL GROUNDWATER RECHARGE UNIT

(51) International classification	:G01N 33/18
(31) Priority Document No	:NA
(32) Priority Date	:NA
(33) Name of priority country	:NA
(86) International Application No	:NA
Filing Date	:NA
(87) International Publication No	: NA
(61) Patent of Addition to Application Number	:NA
Filing Date	:NA
(62) Divisional to Application Number	:NA
Filing Date	:NA

(71)**Name of Applicant :**
1)Dr. Nilkanth Hanmantrao Kulkarni
Address of Applicant :SGGSIE&T,Nanded. Maharashtra India
2)Nayan Sureshraoji Pund
3)Prashant Manohar Tamboli
(72)**Name of Inventor :**
1)Dr. Nilkanth Hanmantrao Kulkarni
2)Nayan Sureshraoji Pund
3)Prashant Manohar Tamboli

(57) Abstract :
A novel method to artificially recharge the aquifer is proposed. It is a controlled method which involves storage tank, filter unit, injection shaft and air vent. Both confined and unconfined aquifers can be recharged by this method with appreciably higher rate of replenishment than conventional recharge methods such as percolation pond and vertical recharge shaft.This method also ensures the injection of filtered water into the aquifer. Results of experimental set up in the laboratory demonstrate higher recharge rate. Using dimensional analysis the reynolds number for viscous flow obeying Darcys law is checked for laboratory model to establish the applicability of this model in prototype conditions. Keywords: Artificial Groundwater Recharge Method, Filter Unit, Higher Recharge Rate, Dimensional Analysis of Laboratory Model.

No. of Pages : 4 No. of Claims : 3

(12) PATENT APPLICATION PUBLICATION
(21) Application No.1260/MUM/2014 A
(19) INDIA
(22) Date of filing of Application :03/04/2014
(43) Publication Date : 22/05/2015

(54) Title of the invention : SYSTEM FOR SUPERVISING BATCH PROCESSES IN MANUFACTURING PLANTS AND METHOD THEREFOR

(51) International classification	:G05B13/02, G06F9/44
(31) Priority Document No	:NA
(32) Priority Date	:NA
(33) Name of priority country	:NA
(86) International Application No	:NA
Filing Date	:NA
(87) International Publication No	: NA
(61) Patent of Addition to Application Number	:NA
Filing Date	:NA
(62) Divisional to Application Number	:NA
Filing Date	:NA

(71)**Name of Applicant :**
1)GIRISH VASANT MEHENDALE
Address of Applicant :1110, WOODLAND HARMONY, NEAR GANDHI BHAVAN, KOTHRUD, PUNE-411038, M.S. INDIA Maharashtra India
(72)**Name of Inventor :**
1)GIRISH VASANT MEHENDALE

(57) Abstract :
Disclosed are a system (100) and a method (300) for supervising batch processes in manufacturing plants. The system (100) comprises a supervisor module (10), an amplifier (20), an output unit (30), a first set of push-buttons (40) and a second set of push-buttons (50). The system (100) and the method (300) provide tighter and automatic supervision on workers/operators. The system (100) and the method (300) improve performance of the batch processes in manufacturing plants in terms of yield, batch-time, energy saving, raw material consumption and consistent product quality.

No. of Pages : 20 No. of Claims : 8

(12) PATENT APPLICATION PUBLICATION
(21) Application No.1939/MUM/2014 A
(19) INDIA
(22) Date of filing of Application :16/06/2014
(43) Publication Date : 22/05/2015

(54) Title of the invention : PORTABLE ACCESSORY TO HOLD MOBILE ELELCTRONIC DEVICE BETTER BOTH HORIZONTALLY AND VERTICALLY

(51) International classification	:B65D85/00, A45F 5/00
(31) Priority Document No	:NA
(32) Priority Date	:NA
(33) Name of priority country	:NA
(86) International Application No	:NA
Filing Date	:NA
(87) International Publication No	: NA
(61) Patent of Addition to Application Number	:NA
Filing Date	:NA
(62) Divisional to Application Number	:NA
Filing Date	:NA

(71)**Name of Applicant :**
1)AATMAN CHANDRESH VORA
Address of Applicant :18/10 PREM MILAN, 2ND FLOOR, BLOCK NO. 10, R.A. KIDWAI RD, WADALA (W) MUMBAI - 400031 Maharashtra India
(72)**Name of Inventor :**
1)AATMAN CHANDRESH VORA

(57) Abstract :
The present invention provides a gripper which has one or more straps (preferably 2) under which the users finger/s could be inserted to get a better grasp of the device for both vertical and horizontal use. When the user is not in need for extra grip, the gripper may be used like a safety cover. This accessory can be easily mounted on the back of the devices because of its appropriate dimensions of its main body frame. These dimensions would be specific to a particular model of a particular electronic device. A grip attachment for an electronic device, such as a mobile phone, enables a user to grasp and control of the mobile phone with single hand. The grip attachment includes a main body frame, one or more straps (preferably 2),random design as an extension to main body frame(for improving the look of the accessory) an appropriate design including grooves and contours on the outer surface of the entire product to provide better grip even when the straps are not used. A soft padding under the straps for users fingers comfort .hollow spaces where necessary(for camera/buttons/flash light/ space for charging point etc) The grip attachment also includes a trivial locking mechanism for attaching the gripper to the electronic device.

No. of Pages : 20 No. of Claims : 13

(12) PATENT APPLICATION PUBLICATION
(21) Application No.1893/MUM/2015 A
(19) INDIA
(22) Date of filing of Application :14/05/2015
(43) Publication Date : 22/05/2015

(54) Title of the invention : A METHOD FOR COMPRESSION USING VARIABLE ENTROPY METHOD.

(51) International classification	:H04N 7/26, G06F17/30
(31) Priority Document No	:NA
(32) Priority Date	:NA
(33) Name of priority country	:NA
(86) International Application No	:NA
Filing Date	:NA
(87) International Publication No	: NA
(61) Patent of Addition to Application Number	:NA
Filing Date	:NA
(62) Divisional to Application Number	:NA
Filing Date	:NA

(71)**Name of Applicant :**
1)JIGNESH N SARVAIYA
Address of Applicant :ELECTRONICS ENGG. DEPARTMENT, SVNIT, ICHCHHANATH, GAURAV PATH, DUMOS ROAD, SURAT - 395007, GUJARAT, INDIA.
2)PRASHANT KUMAR PANDEY
3)DHAVAL VORA
(72)**Name of Inventor :**
1)JIGNESH N SARVAIYA
2)PRASHANT KUMAR PANDEY
3)DHAVAL VORA

(57) Abstract :
In this invention we propose a method of compression by reducing entropy of data .A multi level compression method is proposed by using commands .Subsequently a new method to achieve compression using the entropy by division of data into classes & using commands is being proposed for both long & short data ;the analysis for which is in the description. This method is exclusively helpful for short messages.

No. of Pages : 34 No. of Claims : 6

(12) PATENT APPLICATION PUBLICATION
(19) INDIA
(22) Date of filing of Application :14/05/2015
(21) Application No.1895/MUM/2015 A
(43) Publication Date : 22/05/2015

(54) Title of the invention : NEW DESIGN OF MECHANICAL FAN COVERING MAXIMUM AREA FOR AIR FLOW.

(51) International classification	:F24F 7/06,F04D25/08, F04D29/34
(31) Priority Document No	:NA
(32) Priority Date	:NA
(33) Name of priority country	:NA
(86) International Application No	:NA
Filing Date	:NA
(87) International Publication No	: NA
(61) Patent of Addition to Application Number	:NA
Filing Date	:NA
(62) Divisional to Application Number	:NA
Filing Date	:NA

(71)**Name of Applicant :**
1)ALURU JAYASEKHAR
Address of Applicant :C/O. NIKHIL V. KHALE, DURVUNKUR AANGAN, 2ND FLOOR, FLAT #7, S. NO. 8/9/2, DHABAADIA, AMBEGAON SHIVE VADGAON BUDRUK, PUNE-411 046, MAHARASHTRA, INDIA.
(72)**Name of Inventor :**
1)ALURU JAYASEKHAR

(57) Abstract :
New design of mechanical ceiling fan is made with secondary blades, which are of 30% the total length of the primary blades. The tip end of the secondary blade would be 75% of total length at root end. Secondary blades would be attached to the primary blades with appropriate attachments and would make an angle of 120 degrees parallel to the ceiling facing upwards. Secondary blade would have its root end which is closest to primary blades twisted at an angle of 25 degrees parallel to the plane of the secondary blade and tip end which are farthest to the primary blades would have blades twisted at an angle of 5 degrees parallel to the plane of the secondary blade so as to cut the air and push downwards. The wing span of secondary blade would be approximately 15 centimetres and wing span of primary blade would be 50 centimetres. The root end length would be 10 centimetres and the tip end would be of 7.5 centimetres. Each embodiment can use three, four, or five blades.

No. of Pages : 16 No. of Claims : 10

(12) PATENT APPLICATION PUBLICATION
(21) Application No.1787/MUM/2015 A
(19) INDIA
(22) Date of filing of Application :05/05/2015
(43) Publication Date : 22/05/2015

(54) Title of the invention : A METHOD FOR PREPARATION OF INSTANT PINEAPPLE JUICE BAGS

(51) International classification	:A23B7/157, B65D 77/06
(31) Priority Document No	:NA
(32) Priority Date	:NA
(33) Name of priority country	:NA
(86) International Application No	:NA
Filing Date	:NA
(87) International Publication No	: NA
(61) Patent of Addition to Application Number	:NA
Filing Date	:NA
(62) Divisional to Application Number	:NA
Filing Date	:NA

(71)**Name of Applicant :**
1)DR. R.C. PATIL
Address of Applicant :BHAVAN'S COLLEGE ANDHERI WEST MUMBAI 400058 Maharashtra India
2)(DR). V.N. MAGARE
3)DR CHARUU P KULKARNI
(72)**Name of Inventor :**
1)MS DHANASHREE TALEKAR
2)DR. R.C.PATIL
3)(DR). V. N. MAGARE
4)DR CHARUU P KULKARNI
5)DR. CHANDRA BHANU MAURYA

(57) Abstract :
In one of the aspect of the invention it is provided that a pineapple pulp which is derived as byproduct after extraction of juices from the pineapple fruits is utilized for making the instant pineapple juice bags, optionally the pineapple fruit pulp is also used for making the instant pineapple juice bags, the juice bags having the processed pineapple pulp is dipped in water to reconstitute the pineapple juice, The processing of the pulp for making the juice involves adding the sugar in predefined amount so the sugar acid ratio is maintained and the pulp is homogenized with the sugar by mixing and fridge drying and heating at the 40-80 °C, before packing it to the filter paper bags which infuses the juices after adding water resulting in the juice of the pineapple;

No. of Pages : 10 No. of Claims : 9

(12) PATENT APPLICATION PUBLICATION
(21) Application No.1788/MUM/2015 A
(19) INDIA
(22) Date of filing of Application :05/05/2015
(43) Publication Date : 22/05/2015

(54) Title of the invention : WATER PURIFIER BASED ON CAPACITOR DEIONIZATION (CDI) TECHNOLOGY AND A METHOD THEREFOR

(51) International classification	:C02F1/48, C02F1/461
(31) Priority Document No	:NA
(32) Priority Date	:NA
(33) Name of priority country	:NA
(86) International Application No	:NA
Filing Date	:NA
(87) International Publication No	: NA
(61) Patent of Addition to Application Number	:NA
Filing Date	:NA
(62) Divisional to Application Number	:NA
Filing Date	:NA

(71)**Name of Applicant :**
1)BRIJRAJ KUMAR MISHRA
Address of Applicant :C/O ABHISHEK SHARMA 177, 3RD KUMBHARWADA, ISMAIL BUILDING, SVP ROAD, NULL BAZAAR, MUMBAI-400 004, MAHARASHTRA, INDIA
(72)**Name of Inventor :**
1)BRIJRAJ KUMAR MISHRA

(57) Abstract :
A water purifier based on capacitor deionization (CDI) technology comprises of a raw water sediment filter and a pre silver activated carbon granules/block located peripherally to a CDI device (1) and operatively connected for flow of raw water through them before it enters said device (1). A special power supply (2) is connected to the CDI device for operating the device as well as three or more solenoid valves. A post silver activated carbon granules/block, a UV barrel/reactor, an ultra-filtration filter, a storage tank and a regeneration pump and circuit to revive the CDI unit by citric acid are positioned external to the CDI device (1) and special power supply (2).Device (1) has number of layers of electrodes of a pre-calculated surface area depending upon the amount of purified water output required from the CDI device. Two layers of cat ion (3) are provided on both surfaces of activated carbon sheet (4)separated from next sheet (4) coated on both surfaces with anion layer (6) with insulating mesh (5) and housed in a water tight plastic box. A method of using the water purifier is also disclosed in fig 3.

No. of Pages : 22 No. of Claims : 5

(12) PATENT APPLICATION PUBLICATION
(21) Application No.3537/MUM/2013 A
(19) INDIA
(22) Date of filing of Application :11/02/2014
(43) Publication Date : 22/05/2015

(54) Title of the invention : A SEED TREATMENT PROCESS FOR ENHANCING THE GERMINATION OF HORSE-GRAM SEEDS

(51) International classification	:A01C1/00, A01H 5/10, A01C1/06
(31) Priority Document No	:NA
(32) Priority Date	:NA
(33) Name of priority country	:NA
(86) International Application No	:NA
Filing Date	:NA
(87) International Publication No	: NA
(61) Patent of Addition to Application Number	:NA
Filing Date	:NA
(62) Divisional to Application Number	:NA
Filing Date	:NA

(71)**Name of Applicant :**
1)SADASHIV NARAYAN BOLBHAT
Address of Applicant :AT/P SONEGAON, TAL. JAMKHED, DIST- AHMEDNAGAR 413204, (M.S.) INDIA Maharashtra India
(72)**Name of Inventor :**
1)SADASHIV NARAYAN BOLBHAT
2)RAJARAM SHANKARRAO DUBAL

(57) Abstract :
The present invention provides a process for enhancing the germination of Horse-gram seeds thereby improving plant growth and vigour. The seed treatment process comprising optionally the treatment of Gamma radiation with a dose range of 100 Gy to 600 Gy and Ethyl Methane Sulphonate (EMS) in a range of 0.2 V/V to 0.6 V/V; and / or combination treatment of Gamma radiation and Ethyl Methane Sulphonate (EMS). The Seeds of Horse-gram mutant obtained by the present invention may be used for making ayurvedic preparations for controlling kidney stone, diabetes and weight lose. Further, it is useful for asthma, bronchitis, leucoderma, urinary discharge and heart diseases.

No. of Pages : 16 No. of Claims : 6

(12) PATENT APPLICATION PUBLICATION
(21) Application No.1880/MUM/2015 A
(19) INDIA
(22) Date of filing of Application :13/05/2015
(43) Publication Date : 22/05/2015

(54) Title of the invention : NATURAL FOAMING BATH SOAPS MADE OF COW DUNG

(51) International classification	:A61Q 19/00, A61Q 19/10	(71)**Name of Applicant :** **1)SONI UMESH BHAGWANBHAI** Address of Applicant :105/107, 3RD FLOOR, ROOM NO.13, C. P. TANK, MUMBAI-400 004, MAHARASHTRA, INDIA.
(31) Priority Document No	:NA	(72)**Name of Inventor :**
(32) Priority Date	:NA	**1)SONI UMESH BHAGWANBHAI**
(33) Name of priority country	:NA	
(86) International Application No	:NA	
Filing Date	:NA	
(87) International Publication No	: NA	
(61) Patent of Addition to Application Number	:NA	
Filing Date	:NA	
(62) Divisional to Application Number	:NA	
Filing Date	:NA	

(57) Abstract :
The present invention relates to natural foaming bath soaps for human use, made of cow dung which impart the health and spiritual benefits of using cow dung while bathing to the user. These soaps give stable foaming and do not break when they come in contact with water. Various kinds of natural fragrances along with essential oils are mixed in these soaps to provide aroma to these soaps. Along with these, the soaps contain various herbs which impart different health benefits to the user. These soaps are hand made and machine made and packed and have acceptable fragrances as well as health benefits due to which they become acceptable and favorable to people in general.

No. of Pages : 17 No. of Claims : 6

(12) PATENT APPLICATION PUBLICATION
(21) Application No.1881/MUM/2015 A
(19) INDIA
(22) Date of filing of Application :13/05/2015
(43) Publication Date : 22/05/2015

(54) Title of the invention : NATURAL ORGANIC INCENSE STICKS MADE OF COW DUNG

(51) International classification	:A61L 101/00, A61L 9/00	(71)**Name of Applicant :** **1)SONI UMESH BHAGWANBHAI** Address of Applicant :105/107, 3RD FLOOR, ROOM NO. 13,C. P. TANK, MUMBAI-400004, MAHARASHTRA, INDIA.
(31) Priority Document No	:NA	(72)**Name of Inventor :**
(32) Priority Date	:NA	**1)SONI UMESH BHAGWANBHAI**
(33) Name of priority country	:NA	
(86) International Application No	:NA	
Filing Date	:NA	
(87) International Publication No	: NA	
(61) Patent of Addition to Application Number	:NA	
Filing Date	:NA	
(62) Divisional to Application Number	:NA	
Filing Date	:NA	

(57) Abstract :
The present invention relates to natural organic incense sticks made of cow dung which impart the health and spiritual benefits of using cow dung to the user when it is burnt. These hand made and machine made incense sticks mask the odour of the cow dung and spread pleasing fragrance in the surroundings. They give the user the spiritual benefit of doing yagya daily. These incense sticks are safe because when they are burned they do not emit harmful gases like carbon monoxide. Moreover cow dung when burned also acts as an insecticide and mosquitocide thereby providing health benefits to the user. The incense sticks of the present invention also burn longer and give pleasing fragrance.

No. of Pages : 18 No. of Claims : 6

(12) PATENT APPLICATION PUBLICATION
(21) Application No.1803/MUM/2015 A
(19) INDIA
(22) Date of filing of Application :06/05/2015
(43) Publication Date : 22/05/2015

(54) Title of the invention : INVENTION OF MAST CELL STABILIZING PROPERTIES OF PIPER LONGUM, ALOE VERA, CYNODON DACTYLON AND CYMBOPOGON CITRATUS.

(51) International classification	:A61k36/00, A61K 31/00
(31) Priority Document No	:NA
(32) Priority Date	:NA
(33) Name of priority country	:NA
(86) International Application No	:NA
Filing Date	:NA
(87) International Publication No	: NA
(61) Patent of Addition to Application Number	:NA
Filing Date	:NA
(62) Divisional to Application Number	:NA
Filing Date	:NA

(71)**Name of Applicant :**
1)BALLAL RENUKA BHARAT
Address of Applicant :SR. NO. 30/4, SUMAN PARADISE, A-WING, FLAT NO. 3, NEAR ZEAL COLLEGE, NARHE, PUNE-411041, MAHARASHTRA, INDIA
2)GHORPADE VILASRAO MANIKRAO
3)BALLAL BHARAT BAJARANG
4)DIVYA CHANDRASEKHARAN
5)HULAWALE SAGAR ANANTA
6)BHAT ANKUSH JEE
(72)**Name of Inventor :**
1)BALLAL RENUKA BHARAT
2)GHORPADE VILASRAO MANIKRAO
3)BALLAL BHARAT BAJARANG
4)DIVYA CHANDRASEKHARAN
5)HULAWALE SAGAR ANANTA
6)BHAT ANKUSH JEE

(57) Abstract :
Many air borne, animal borne allergens or few chemical substances triggers serious type of Type I Hypersensitivity. It is generally characterized by vasodilation, constriction of smooth muscles, eczema and allied symptoms. It has been proved to be fatal for many times in untreated cases. The key cell which triggers Type I Hypersensitivity is mast cell and the consequences are arises due to biochemical mechanism associated with cross lining of Fc£RI receptors and subsequent degranulation of mast cells. Thus stabilization of mast cell membrane becomes essential to control manifestations of Type I Hypersensitivity. By using unique procedure and modern biotechnique tools, the novel product is derived from the mixture of Piper longum, Aloe vera, Cynodon dactylon and Cymbopogon citratus. The product stabilizes mast cell membrane, down regulates the biosynthesis of performed mediators of allergic reactions and thus is useful for minimizing the symptoms of Type I Hypersensitivity.

No. of Pages : 9 No. of Claims : 4

(12) PATENT APPLICATION PUBLICATION
(19) INDIA
(22) Date of filing of Application :29/10/2014
(21) Application No.3428/MUM/2014 A
(43) Publication Date : 22/05/2015

(54) Title of the invention : FATIGUE TESTING MACHINE FOR CUSTOMIZED HIP IMPLANT

(51) International classification	:A61F2/30, A61F2/32
(31) Priority Document No	:NA
(32) Priority Date	:NA
(33) Name of priority country	:NA
(86) International Application No	:NA
Filing Date	:NA
(87) International Publication No	: NA
(61) Patent of Addition to Application Number	:NA
Filing Date	:NA
(62) Divisional to Application Number	:NA
Filing Date	:NA

(71)**Name of Applicant :**
1)Abhaykumar Madhusudan Kuthe
Address of Applicant :Visvesvaraya National institute of technology, South Ambazari Road, Nagpur 440 010, Maharashtra India
2)Mangesh Ramchandra Dharme
(72)**Name of Inventor :**
1)Abhaykumar Madhusudan Kuthe
2)Mangesh Ramchandra Dharme
3)Apar Bhatnagar

(57) Abstract :
This invention deals with the development of machine which can be used for fatigue testing of customized hip implant. In Total hip replacement (THR) a diseased hip joint is replaces with implants. The fatigue process begins with the accumulation of damage at a localized region or regions due to alternating loads, which eventually leads to formation of cracks and their subsequent propagation. When one of the cracks has grown to such an extent that the remaining section of the material is insufficient to carry out the applied load, a sudden failure or fracture takes place at that point. The objective of the designing process is to develop such a system which is capable of applying continuous cyclic loading on the hip implant after a fixed interval of time. For Loading of the implant a special cam and follower mechanism was developed to apply the forces similar to the gait cycle of human activities like Normal Walking, Down Stair and Up Stair. Following invention is described in detail with the help of Figure 1 of sheet 1 showing an isometric view, Figure 2 of sheet 2 showing front view of the fatigue testing machine and Figure 3 & 4 of sheet 3 showing cam design for normal walking and down stair.

No. of Pages : 16 No. of Claims : 4

(12) PATENT APPLICATION PUBLICATION
(21) Application No.1819/MUM/2015 A
(19) INDIA
(22) Date of filing of Application :07/05/2015
(43) Publication Date : 22/05/2015

(54) Title of the invention : RELIABLE PROCESS FOR POLLEN CLASSIFICATION FROM POLLEN IMAGES USING COMPUTATIONAL INTELLIGENCE

(51) International classification	:G06K9/00, G06K9/52
(31) Priority Document No	:NA
(32) Priority Date	:NA
(33) Name of priority country	:NA
(86) International Application No	:NA
Filing Date	:NA
(87) International Publication No	: NA
(61) Patent of Addition to Application Number	:NA
Filing Date	:NA
(62) Divisional to Application Number	:NA
Filing Date	:NA

(71)**Name of Applicant :**
1)Sanjay Vasant Dudul
Address of Applicant :Professor and Head, Post Graduate Department of Applied Electronics, Sant Gadge Baba Amravati University, Amravati Maharashtra State, India.
2)Jaikiran Anandrao Tidke
3)Vijay Ramchandra Dhawale
(72)**Name of Inventor :**
1)Sanjay Vasant Dudul
2)Jaikiran Anandrao Tidke
3)Vijay Ramchandra Dhawale

(57) Abstract :
Pollen grains play an important role in classification system of plants. Pollen morphological characters are very useful in plant classification and identification of plants. The traditional process of pollen classification analyses the pollen morphological characters using microscopy. This procedure is tedious and requires experts from the field of palynology. With a view to extract features from pollen images, a new classification process is developed which proposes Image Histogram coefficients in addition to image statistics and shape descriptor. The Average Classification Accuracy of Multilayer Perceptron Neural Network comprising of two hidden layers is found to be the best (95 % on Cross Validation dataset). Thus, a Process for pollen classification is developed, which could be easily modified to classify more than 10 species. The proposed Process will certainly provide a simple, accurate, robust and effective alternative to traditional process of pollen image analysis.

No. of Pages : 18 No. of Claims : 4

(12) PATENT APPLICATION PUBLICATION
(19) INDIA
(22) Date of filing of Application :07/05/2015

(21) Application No.1824/MUM/2015 A
(43) Publication Date : 22/05/2015

(54) Title of the invention : GUIDANCE CONTROL SYSTEM FOR AN AUTONOMOUS VEHICLE

(51) International classification	:G01S19/48, G05D1/02
(31) Priority Document No	:NA
(32) Priority Date	:NA
(33) Name of priority country	:NA
(86) International Application No	:NA
Filing Date	:NA
(87) International Publication No	: NA
(61) Patent of Addition to Application Number	:NA
Filing Date	:NA
(62) Divisional to Application Number	:NA
Filing Date	:NA

(71)**Name of Applicant :**
1)KPIT TECHNOLOGIES LTD.
Address of Applicant :Plot No: 35 & 36, Rajiv Gandhi Infotech Park, Phase 1, MIDC, Hinjawadi, Pune-411057 Maharashtra India
2)YANMAR CO., LTD.
(72)**Name of Inventor :**
1)VORA, PRASHANTKUMAR BIPINCHANDRA
2)SHRIVASTAVA, RITURAJ
3)SHARMA, MANUJ
4)DAS, SOUMYO
5)MATSUMOTO, KEIJI
6)NIU, HIDEKAZU

(57) Abstract :
The present invention describes a guidance control system for an autonomous vehicle, where the vehicle performs an autonomous navigation and operation while a position of the vehicle is measured using a satellite navigation system. The guidance control system comprises an antenna position compensation module, a vehicle navigation module, a lateral control module, a heading control module, and an yaw rate control module. The antenna position compensation module provides guidance control signal to the autonomous vehicle during selection of virtual antenna position, wherein when the vehicle moves backward, a virtual antenna position is set in a backward position by a predetermined distance from an antenna position for receiving a signal from the satellite navigation system, and a lateral control is performed using a lateral error from a pre-defined path at the virtual antenna position.

No. of Pages : 39 No. of Claims : 5

(12) PATENT APPLICATION PUBLICATION
(21) Application No.2388/MUM/2013 A
(19) INDIA
(22) Date of filing of Application :17/01/2014
(43) Publication Date : 22/05/2015

(54) Title of the invention : A DEVICE FOR ELECTRONIC SURVEILLANCE, CONTROL & ENFORCEMENT OF TRAFFIC RULES & REGULATIONS.

(51) International classification	:H04N7/18, G06F15/16, G06F17/30
(31) Priority Document No	:NA
(32) Priority Date	:NA
(33) Name of priority country	:NA
(86) International Application No	:NA
Filing Date	:NA
(87) International Publication No	: NA
(61) Patent of Addition to Application Number	:NA
Filing Date	:NA
(62) Divisional to Application Number	:NA
Filing Date	:NA

(71)**Name of Applicant :**
1)DEVANSHI KIRIT SHAH
Address of Applicant :19, AHILYAMATA COLONY, SUMATINATH APARTMENT, NEW DEWAS ROAD, INDORE, MADHYA PRADESH, 452003, INDIA. Madhya Pradesh India
(72)**Name of Inventor :**
1)DEVANSHI KIRIT SHAH

(57) Abstract :
The present invention relates to a device for electronic surveillance, control & enforcement of traffic rules & regulations. This invention generally relates to regulating & prevention of violation of traffic rules & regulations. This invention relates in particular to such arrangements in the form of a hand held / mountable electronic device with capabilities of detect & act against the violation of traffic rules & regulations. The continuously increasing mass of vehicles on the road has resulted in complex traffic system, giving a regular visual of air & noise pollution as well the traffic, irritated facial expressions, and violation of traffic rules has become a fashion or habit. This increasing vehicle mass has exposed the limitations of the present traffic controlling system with the demand of modifications offering Auto Disciplined drive.

No. of Pages : 23 No. of Claims : 7

(12) PATENT APPLICATION PUBLICATION
(21) Application No.121/MUM/2015 A
(19) INDIA
(22) Date of filing of Application :13/01/2015
(43) Publication Date : 22/05/2015

(54) Title of the invention : TOOL FOR COTTON COMBING AND CLEANING WHICH IS MANUALLY OPERATED AND IS LIGHT WEIGHT, HANDY, ECO-FRIENDLY SUITABLE FOR KHADI

(51) International classification :D01G11/00
(31) Priority Document No :NA
(32) Priority Date :NA
(33) Name of priority country :NA
(86) International Application No :NA
Filing Date :NA
(87) International Publication No : NA
(61) Patent of Addition to Application Number :NA
Filing Date :NA
(62) Divisional to Application Number :NA
Filing Date :NA

(71)**Name of Applicant :**
1)MAHATMA GANDHI INSTITUTE FOR RURAL INDUSTRILISATION (M.G.I.R.I.)
Address of Applicant :M.G.I.R.I. SOUTH CAMPUS, MAGANWADI, WARDHA-442001, MAHARASHTRA, INDIA
(72)**Name of Inventor :**
1)MAHESH KUMAR
2)TAPAS RANJAN KAR

(57) Abstract :
Manually operated, light weight, handy, eco -friendly, zero maintenance, cheap stainless steel tool for cotton combing and cleaning suitable for khadi sector artisans has been developed as a home based employment avenue replacing the existing Valuga fish jaw. The tool is prepared with wire teeth in both sides Fig.4(l), 7-8 per cm wire teeth density, 3.0 -3.5 mm teeth height, 40-45 mm working area fig.4(3), adjustable upper and lower portion of wire teeth with a vertical cut line Fig.4(2) to suit to varying staple lengths of cotton and combs the fibre of seed cotton to remove the minimum quantity of short fibre as required to maintain the quality of the end product. Handle is made up of suction hose pipe and 80-85 mm length Fig.4(4) with its gripping designed in such a way that there will be no problem of sweating in palm during prolonged working hours making it convenient to use in either left or right hand.

No. of Pages : 11 No. of Claims : 3

(12) PATENT APPLICATION PUBLICATION
(21) Application No.3919/MUM/2014 A
(19) INDIA
(22) Date of filing of Application :05/12/2014
(43) Publication Date : 22/05/2015

(54) Title of the invention : ELECTRIC POWER GENERATION ON USING ROTATIONAL ENERGY FROM TRAIN WHEELS

(51) International classification	:H02K53/00, F03G7/08
(31) Priority Document No	:NA
(32) Priority Date	:NA
(33) Name of priority country	:NA
(86) International Application No	:NA
Filing Date	:NA
(87) International Publication No	: NA
(61) Patent of Addition to Application Number	:NA
Filing Date	:NA
(62) Divisional to Application Number	:NA
Filing Date	:NA

(71)**Name of Applicant :**
1)Devendrasing Ranjitsing Deore
Address of Applicant :Room No. 2, 2nd floor, New Sudam Niwas, Subhash Road, Chincholi Pada, Dombivali West, Dist Thane Maharashtra India
(72)**Name of Inventor :**
1)Devendrasing Ranjitsing Deore

(57) Abstract :
This invention provides a modern method of generating electric power. The system uses conversion of kinetic energy to electrical energy. During motion kinetic energy is developed in the axle and wheel arrangement of the train. This energy is transferred to generator via Gear , gear shaft and universal joint. The output from the generator in the form of Electrical energy, is then transmitted to Transformer and then via pantograph to the overhead wire. This generated power can then be distributed to nearby sub stations for industrial and domestic use. In India projects like Konkan railway and South Central railway, which run on diesel engine, this system can be used effectively. The invention is an environment friendly and cost effective alternative to existing power generation systems.

No. of Pages : 12 No. of Claims : 10

(12) PATENT APPLICATION PUBLICATION
(21) Application No.438/MUM/2015 A
(19) INDIA
(22) Date of filing of Application :11/02/2015
(43) Publication Date : 22/05/2015

(54) Title of the invention : ASSISTANCE FOR DECISION MAKING IN THE CRICKET USING CAPACITIVE PROXIMITY SENSING

(51) International classification :G01S19/47
(31) Priority Document No :NA
(32) Priority Date :NA
(33) Name of priority country :NA
(86) International Application No :NA
Filing Date :NA
(87) International Publication No : NA
(61) Patent of Addition to Application Number :NA
Filing Date :NA
(62) Divisional to Application Number :NA
Filing Date :NA

(71)**Name of Applicant :**
1)RANA PARTH UMESHCHANDRA
Address of Applicant :D-5, GEETA PARK, B/H BRIGHT SCHOOL, VIP ROAD, KARELIBAUG, VADODARA, GUJARAT-390022, INDIA. Gujarat India
2)IYER GOVINDPRAKASH MEENAKSHISUNDARAM
(72)**Name of Inventor :**
1)RANA PARTH UMESHCHANDRA
2)IYER GOVINDPRAKASH MEENAKSHISUNDARAM

(57) Abstract :
This novel invention provides a system which helps the umpire to make an instant decision in case of no-ball, run out and stumping in game of cricket. The umpires on the field at the time of game has not to depend upon third umpire review to take judgement. Based on capacitive proximity sensing, a metallic sense plate connected to microcontroller is installed under specific portion of pitch to sense whether the bowler steps inside or outside the popping crease at the time of delivery. Similarly, the pitch senses batsmans foot and bat surface for the case of run-out and stumping. The shoe which is to be sensed by the sense plate has its outsole covered by conductive rubber layer. The area of the bat that touches the ground is painted by the conductive adhesive to make it sensed by the sense plate.

No. of Pages : 18 No. of Claims : 8

(12) PATENT APPLICATION PUBLICATION
(21) Application No.3106/CHE/2014 A
(19) INDIA
(22) Date of filing of Application :26/06/2014
(43) Publication Date : 22/05/2015

(54) Title of the invention : PRODCUTION OF CARBON NANOTUBES IN LARGE SCALE CONTINUOUSLY USING INDUSTRIAL EMISSIONS AT INDUSTRIAL SITES

(51) International classification	:C01B31/00
(31) Priority Document No	:NA
(32) Priority Date	:NA
(33) Name of priority country	:NA
(86) International Application No	:NA
Filing Date	:NA
(87) International Publication No	: NA
(61) Patent of Addition to Application Number	:NA
Filing Date	:NA
(62) Divisional to Application Number	:NA
Filing Date	:NA

(71)**Name of Applicant :**
1)VENKATESWER RAO MANDAPATI
Address of Applicant :PLOT. NO: 212/A, FLAT. NO: 102, RAGAVENDRA NILAYAM, ADDAGUTTA SOCIETY, WESTERN HILLS, NEAR HMT COLONY, JNTUH, HYDERABAD - 500 072 Andhra Pradesh India
2)VENKATESWARA RAO SODISETTI
3)VENKATESAN K R
(72)**Name of Inventor :**
1)VENKATESWER RAO MANDAPATI
2)VENKATESWARA RAO SODISETTI
3)VENKATESAN K R

(57) Abstract :
The present invention discloses a hybrid apparatus for continuous production Carbon nanotubes (CNTs) using Industrial emitted gases (IEG) at industrial sites economically, as well as the method to carry it out. The apparatus for the CNT synthesis is includes: A pair of volatile separating tanks; particle filter; moisture trapper, connected in line to flow meter; simultaneously a precursor storage tank is also connected to the reactor separately; a furnace enclosing the reactor is maintained at a suitable temperature to allow the formation of CNTs inside the reactor; a vacuum system is connected end of the reactor to collect CNTs in bag fibre filter.

No. of Pages : 27 No. of Claims : 22

(12) PATENT APPLICATION PUBLICATION
(19) INDIA
(22) Date of filing of Application :05/02/2015
(21) Application No.568/CHE/2015 A
(43) Publication Date : 22/05/2015

(54) Title of the invention : AN INTERMEDIATE SYSTEM AND METHOD FOR FILTERING TAR IN CIGARETTE SMOKE

(51) International classification :A24D
(31) Priority Document No :4732/CHE/2013
(32) Priority Date :21/10/2013
(33) Name of priority country :India
(86) International Application No :NA
Filing Date :NA
(87) International Publication No : NA
(61) Patent of Addition to Application Number :NA
Filing Date :NA
(62) Divisional to Application Number :NA
Filing Date :NA

(71)**Name of Applicant :**
1)VELPULA NIKHIL KUMAR
Address of Applicant :Flat No: 503, Scion Heights, Mallikarjuna Nagar, Chintal, Hyderabad Telangana India
(72)**Name of Inventor :**
1)VELPULA NIKHIL KUMAR

(57) Abstract :
An intermediate layered system and method of filtering TAR in cigarette products to reduce the harshness of the smoke and keep tobacco out with a plurality of partitioned layers combination of paper and thin plastic contains pores to pass out the smoke. The claimed effective filtering system facilitates the plurality of layers formed by paper and thin plastic contains pores where paper holds the TAR and plastic will stop the flow of TAR. According to a non limiting exemplary embodiment of the present invention, the intermediate layered system further provides a filtering system that holds chemicals in tobacco which are harmful to the human body.

No. of Pages : 13 No. of Claims : 10

(12) PATENT APPLICATION PUBLICATION
(21) Application No.2472/CHE/2015 A
(19) INDIA
(22) Date of filing of Application :15/05/2015
(43) Publication Date : 22/05/2015

(54) Title of the invention : A RADIATION CONCENTRATOR INCORPORATING COMPOUND CONFOCAL UNEVEN PARABOLIC PRIMARY REFLECTOR, TAILORED SECONDARY REFLECTOR AND TAILORED RECEIVER.

(51) International classification :F24J2/00
(31) Priority Document No :NA
(32) Priority Date :NA
(33) Name of priority country :NA
(86) International Application No :NA
Filing Date :NA
(87) International Publication No : NA
(61) Patent of Addition to Application Number :NA
Filing Date :NA
(62) Divisional to Application Number :NA
Filing Date :NA

(71)**Name of Applicant :**
1)NEVIN NOBLE
Address of Applicant :Kochery House, Ochanthuruth P.O., Vypin, Cochin. Kerala India
(72)**Name of Inventor :**
1)NEVIN NOBLE

(57) Abstract :
A radiation concentrator, giving good concentration ratio when employed as a solar collector, incorporating a primary reflector (1) consisting of a pair of confocal uneven parabolic reflectors arranged on either side of an axis (103), a receiver (3) placed at the common focus (4) of the uneven parabolic reflectors, a pair of secondary reflectors (2) placed above the receiver (3) engulfing it. The uneven parabolic reflectors have their common focus (4) at the axis (103) and are rotated around the focus, in opposite direction, through an angle (157) that is 1/4th of the angle subtended by the radiation source. The receiver (3) is configured to absorb the upper half of the reflected radiation and the secondary reflectors (2) are configured to re-reflect the lower half of the reflected radiation to the receiver (3).

No. of Pages : 29 No. of Claims : 9

(12) PATENT APPLICATION PUBLICATION
(21) Application No.2252/CHE/2015 A
(19) INDIA
(22) Date of filing of Application :01/05/2015
(43) Publication Date : 22/05/2015

(54) Title of the invention : SAFETY ISOLATION BAGS FOR INTRA ABDOMINAL, ENDOSCOPIC PROCEDURES, POWER MORCELLATION AND VAGINAL MORCELLATION

(51) International classification :A61B17/00
(31) Priority Document No :NA
(32) Priority Date :NA
(33) Name of priority country :NA
(86) International Application No :NA
Filing Date :NA
(87) International Publication No : NA
(61) Patent of Addition to Application Number :5813/CHE/2014
Filed on :01/01/1900
(62) Divisional to Application Number :NA
Filing Date :NA

(71)**Name of Applicant :**
1)JOSEPH, Lalu
Address of Applicant :13/756-A, Aradhana, Kunnel House, Thoppil, Thrikkara P.O., Ernakulum - 682 021, Kerala, India
(72)**Name of Inventor :**
1)JOSEPH, Lalu

(57) Abstract :
A safety isolation bag for intra-abdominal, endoscopic procedures, power morcellation and vaginal morcellation to facilitate the safe removal of surgical specimen or body mass within the abdominal cavity is disclosed. It is an inflatable pneumoperitoneum device comprising an expandable and collapsible enclosed internal space or cavity (5) formed by one or more layers of flexible biocompatible / medical grade plastic material, having a neck portion (4) with a mouth (3), and normally kept in opened position by means of a flexible retainer ring (7) embedded at upper circumferential portion of the mouth. One or more non-return valves are provided along the walls of the safety isolation bag for introducing the surgical instruments and accessories into the enclosed internal space or cavity (5). A retractor means (2) attached to the periphery of the mouth of the bag facilitates pulling out the bag through the incision made in the body.

No. of Pages : 34 No. of Claims : 18

(12) PATENT APPLICATION PUBLICATION
(21) Application No.2249/CHE/2015 A
(19) INDIA
(22) Date of filing of Application :01/05/2015
(43) Publication Date : 22/05/2015

(54) Title of the invention : A SYSTEM TO DETECT PRESENCE OF LIQUID IN A PIPE USING 2-CORE WIRE AS CAPACITIVE SENSOR

(51) International classification :G01M
(31) Priority Document No :NA
(32) Priority Date :NA
(33) Name of priority country :NA
(86) International Application No :NA
Filing Date :NA
(87) International Publication No : NA
(61) Patent of Addition to Application Number :NA
Filing Date :NA
(62) Divisional to Application Number :NA
Filing Date :NA

(71)**Name of Applicant :**
1)Shivashish Prarthi
Address of Applicant :403, Spadix apt. Kodihalli, Bangalore Karnataka India
(72)**Name of Inventor :**
1)PVKS Ramanjaneya Kumar
2)Shivashish Prarthi

(57) Abstract :
A system to detect presence of liquid in a pipe using 2-core wire as capacitive sensor Presence of liquid in a pipe is detected using a 2-core wire as a capacitive sensor. The 2-core wire is inserted in the pipe shown in Fig-2. One of the two core wire is connected to ground and the other is directly connected to the microcontroller. A third wire is also used to sense noise. The sensor system is calibrated manually. The calibration information is stored in memory of microcontroller during calibration. Due to the design, the entire system becomes very economical and easy to install and use.

No. of Pages : 14 No. of Claims : 7

(12) PATENT APPLICATION PUBLICATION
(21) Application No.2404/CHE/2015 A
(19) INDIA
(22) Date of filing of Application :11/05/2015
(43) Publication Date : 22/05/2015

(54) Title of the invention : SYSTEM AND METHOD FOR INFORMATION TECHNOLOGY INFRASTRUCTURE TRANSFORMATION

(51) International classification	:G06Q30/00	(71)**Name of Applicant :**
(31) Priority Document No	:NA	**1)WIPRO LIMITED**
(32) Priority Date	:NA	Address of Applicant :Doddakannelli, Sarjapur Road,
(33) Name of priority country	:NA	Bangalore 560035, Karnataka, India.
(86) International Application No	:NA	(72)**Name of Inventor :**
Filing Date	:NA	**1)SRIRAM BHARGAV MADHAV**
(87) International Publication No	: NA	**2)ADARSH HASSAN DEVENDRASWAMY**
(61) Patent of Addition to Application Number	:NA	**3)ARIJIT DEY**
Filing Date	:NA	
(62) Divisional to Application Number	:NA	
Filing Date	:NA	

(57) Abstract :
This disclosure relates generally to information technology (IT), and more particularly to a system and method for IT infrastructure transformation. In one embodiment, a method is provided for transforming an IT infrastructure. The method comprises gathering information related to the IT infrastructure, assessing a current maturity level of the IT infrastructure using an analytical maturity model, and deriving a transformation roadmap to achieve a desired maturity level of the IT infrastructure based on the current maturity level and the information gathered. The analytical maturity model configured to provide maturity ratings based on the information gathered and industry standard.

No. of Pages : 26 No. of Claims : 17

(12) PATENT APPLICATION PUBLICATION
(19) INDIA
(22) Date of filing of Application :12/03/2015
(21) Application No.1224/CHE/2015 A
(43) Publication Date : 22/05/2015

(54) Title of the invention : A FOUR POLE SOLID STATE RELAY WITH COMMON AC AND DC CONTROL INPUT

(51) International classification :H03K17/00
(31) Priority Document No :NA
(32) Priority Date :NA
(33) Name of priority country :NA
(86) International Application No :NA
Filing Date :NA
(87) International Publication No : NA
(61) Patent of Addition to Application Number :NA
Filing Date :NA
(62) Divisional to Application Number :NA
Filing Date :NA

(71)**Name of Applicant :**
1)ADVANCED ENERGY MANAGEMENT
Address of Applicant :26, KUMARAN 3RD CROSS ST., JB-ESTATE, AVADI, CHENNAI 600 054 Tamil Nadu India
(72)**Name of Inventor :**
1)MOHAMMED JAMALUDDIN

(57) Abstract :
A four pole solid state relay with specified characteristics for its design and control aspect to address most of the industrial machinery requirements of enabling four operations at a time and disabling similar operation at the same time using a common control signal is provided. The input can be either Direct or Alternating voltages ranging from 5volts to 30volts. By using this four pole solid state relay device / system it is possible to control relatively high voltage and current simultaneously for 1 to 4 channels. Thus, the 4 pole solid state relay can perform perfectly for such applications and operations. Further it can be looped for increasing the number of channels from 4 to 8 or 12 or 16 etc, again with a common control voltage of 5 to 30 volts AC or DC coming from other control electronics.

No. of Pages : 13 No. of Claims : 9

(12) PATENT APPLICATION PUBLICATION
(21) Application No.2357/CHE/2015 A
(19) INDIA
(22) Date of filing of Application :08/05/2015
(43) Publication Date : 22/05/2015

(54) Title of the invention : SYSTEMS AND METHODS FOR OPTIMIZED IMPLEMENTATION OF A DATA WAREHOUSE ON A CLOUD NETWORK

(51) International classification	:G06F17/00	(71)**Name of Applicant :**
(31) Priority Document No	:NA	**1)WIPRO LIMITED**
(32) Priority Date	:NA	Address of Applicant :Doddakannelli, Sarjapur Road,
(33) Name of priority country	:NA	Bangalore 560035, Karnataka, India.
(86) International Application No	:NA	(72)**Name of Inventor :**
Filing Date	:NA	**1)KARIAPPA THIMMAIAH NELLAMAKKADA**
(87) International Publication No	: NA	
(61) Patent of Addition to Application Number	:NA	
Filing Date	:NA	
(62) Divisional to Application Number	:NA	
Filing Date	:NA	

(57) Abstract :
Systems and methods for optimized implementation of a data warehouse on a cloud network are disclosed. In one embodiment, a method comprises receiving, by a processor of a cloud integrated data warehousing (CIDW) system, data from at least one data source. The method further comprises processing the data to obtain structured data. The method further comprises encrypting the structured data stored in the CIDW system. The method further comprises decrypting load data, from amongst the structured data, to be loaded into a database. The method further comprises loading the load data into the database through one of an extract transform load (ETL) process and an extract load transform (ELT) process. The method further comprises generating reports comprising encrypted load information for end users.

No. of Pages : 22 No. of Claims : 15

(12) PATENT APPLICATION PUBLICATION
(21) Application No.440/KOL/2015 A
(19) INDIA
(22) Date of filing of Application :23/04/2015
(43) Publication Date : 22/05/2015

(54) Title of the invention : SINGLE COMPARTMENT SEPTIC TANK AND PROCESS OF MANUFACTURING THE SAME AND PROCESS OF TREATMENT OF THE WASTE MATERIAL BY USING THE SEPTIC TANK

(51) International classification :B01F3/14
(31) Priority Document No :NA
(32) Priority Date :NA
(33) Name of priority country :NA
(86) International Application No :NA
Filing Date :NA
(87) International Publication No : NA
(61) Patent of Addition to Application Number :NA
Filing Date :NA
(62) Divisional to Application Number :NA
Filing Date :NA

(71)**Name of Applicant :**
1)SHAMBHU PRASAD
Address of Applicant :Flat- 501, Block-B, Aishwarya Enclave Tiwari Tank Road, Mallah Toli, Ranchi- 834001, Jharkhand, INDIA
2)NAVNEET KUMAR
(72)**Name of Inventor :**
1)SHAMBHU PRASAD

(57) Abstract :
The present invention relates to a single compartment septic tank. In particular, the present invention relates to a septic tank for treating household waste water including human feces in daily life. Furthermore, this invention also relates to a septic tank with a single compartment septic latrine tank made with RCC and PVC fiber which can be constructed in which diameter of the septic tank is two feet and depth of the tank is eight feet with the latrine room above it. The invention also relates to a process of manufacturing the septic tank with a single compartment septic latrine tank made with RCC and PVC fiber which can be constructed in which diameter of the septic tank is two feet and depth of the tank is eight feet with the latrine room above it.

No. of Pages : 25 No. of Claims : 9

(12) PATENT APPLICATION PUBLICATION
(21) Application No.432/KOL/2015 A
(19) INDIA
(22) Date of filing of Application :21/04/2015
(43) Publication Date : 22/05/2015

(54) Title of the invention : ENERGY FREE FOOD PRESERVER

(51) International classification :A23B7/153
(31) Priority Document No :NA
(32) Priority Date :NA
(33) Name of priority country :NA
(86) International Application No :NA
Filing Date :NA
(87) International Publication No : NA
(61) Patent of Addition to Application Number :NA
Filing Date :NA
(62) Divisional to Application Number :NA
Filing Date :NA

(71)**Name of Applicant :**
1)SRI SATYAKAM SAHA
Address of Applicant :CHANDITALA, RAIGANJ, UTTAR DINAJPUR (W.B) INDIA
(72)**Name of Inventor :**
1)SRI SATYAKAM SAHA

(57) Abstract :
The present invention relates to a unique cost effective energy saving Food preserving unit to keep a product warm and fresh for long time . The present invention relates to a unique cost effective energy saving Food preserving unit to keep a product warm and fresh for long time.

No. of Pages : 12 No. of Claims : 7

(12) PATENT APPLICATION PUBLICATION
(21) Application No.413/KOL/2015 A
(19) INDIA
(22) Date of filing of Application :13/04/2015
(43) Publication Date : 22/05/2015

(54) Title of the invention : A SYSTEM FOR INTERACTIVELY CREATING TIME LAPSED ANIMATION.

(51) International classification	:G06F3/0485
(31) Priority Document No	:NA
(32) Priority Date	:NA
(33) Name of priority country	:NA
(86) International Application No	:NA
Filing Date	:NA
(87) International Publication No	: NA
(61) Patent of Addition to Application Number	:NA
Filing Date	:NA
(62) Divisional to Application Number	:NA
Filing Date	:NA

(71)**Name of Applicant :**
1)CENTRAL RESEARCH & TRAINING LABORATORY (NATIONAL COUNCIL OF SCIENCE MUSEUMS)
Address of Applicant :Ministry of Culture, Govt. of India, 33, Block GN, Sector-V Kolkata-700091, West Bengal, India.
(72)**Name of Inventor :**
1)CHAUDHURI, Shri Subhabrata;
2)DASGUPTA, Shri Nataraj;
3)BAGCHI, Shri Manash;
4)SARKAR, Shri Tapan Kumar;
5)KABASI, Shri Kuntal;
6)DAS (GHOSE), Ms Aditi;

(57) Abstract :
The present invention discloses an interactive system for creating time lapsed animation. The interactive system comprises a workspace enabling display of background in relation to movable animation props, an imaging device for capturing images of the background in relation to repeated reorientation of the animation props, a computing device for storing the captured images of the imaging device in a sequential manner, a display module for playing the stored image sequence from said computing device and a controllable activation means for playing the stored image sequence at user defined rate in said display module and thus representing the repeated reorientation of the animation props with respect to the background as time lapsed animation.

No. of Pages : 19 No. of Claims : 11

Publication After 18 Months:

The following Patent Applications have been published under Section 11A (3) of The Patents (Amendment) Act, 2005. Any Person may file representation by way of opposition to the Controller of Patents at the appropriate office against the grant of the patent in the prescribed manner under section 25(1) of the Patents (Amendment) Act, 2005 read with the rule 55 of The Patents (Amendment) Rules, 2006:

(12) PATENT APPLICATION PUBLICATION

(21) Application No.10988/DELNP/2014 A

(19) INDIA

(22) Date of filing of Application :22/12/2014

(43) Publication Date : 22/05/2015

(54) Title of the invention : LOCKING DIFFERENTIAL HAVING COMBINATION PRELOAD SPRINGS FOR MAINTAINED CONTACT

(51) International classification	:F16H48/14
(31) Priority Document No	:61/694501
(32) Priority Date	:29/08/2012
(33) Name of priority country	:U.S.A.
(86) International Application No	:PCT/US2013/056586
Filing Date	:26/08/2013
(87) International Publication No	:WO 2014/035869
(61) Patent of Addition to Application Number	:NA
Filing Date	:NA
(62) Divisional to Application Number	:NA
Filing Date	:NA

(71)**Name of Applicant :**
1)EATON CORPORATION
Address of Applicant :1000 Eaton Boulevard Cleveland OH 44122 U.S.A.
(72)**Name of Inventor :**
1)CREAGER Christopher Wayne

(57) Abstract :
A locking differential for a vehicle includes a rotatable housing and a differential mechanism supported in the housing. The differential mechanism includes a pair of clutch members wherein each of the clutch members presents an inwardly directed face. Each face includes a groove disposed in spacing relationship with respect to the other. A cross pin is received in the groove and is operatively connected for rotation with the housing. The clutch members are axially moveable within the housing so that they may engage respective clutch members coupled to a pair of axle half shafts. A plurality of springs apply a pre load to only the clutch members wherein contact is maintained between the clutch members and the cross pin.

No. of Pages : 22 No. of Claims : 25

(12) PATENT APPLICATION PUBLICATION
(19) INDIA
(22) Date of filing of Application :22/12/2014
(21) Application No.10989/DELNP/2014 A
(43) Publication Date : 22/05/2015

(54) Title of the invention : LOCKING DIFFERENTIAL HAVING PRELOAD SPRING WEAR PADS

(51) International classification :B60K17/16,B60K23/04,F16H48/20
(31) Priority Document No :61/730560
(32) Priority Date :28/11/2012
(33) Name of priority country :U.S.A.
(86) International Application No :PCT/US2013/072185
Filing Date :27/11/2013
(87) International Publication No :WO 2014/085554
(61) Patent of Addition to Application Number :NA
Filing Date :NA
(62) Divisional to Application Number :NA
Filing Date :NA

(71)**Name of Applicant :**
1)EATON CORPORATION
Address of Applicant :1000 Eaton Boulevard Cleveland OH 44122 U.S.A.
(72)**Name of Inventor :**
1)COCHREN Steven J.
2)CREAGER Christopher W.

(57) Abstract :
A locking differential for a vehicle includes a rotatable housing and a differential mechanism supported in the housing. The differential mechanism includes a pair of clutch members wherein each of the clutch members presents an inwardly directed face. Each face includes a groove disposed in spacing relationship with respect to the other. A cross pin is received in each groove and is operatively connected for rotation with the housing. At least one biasing member is disposed between the clutch members and at least one wear pad is disposed at an end of the at least one biasing member to preload the at least one biasing member and to allow the at least one biasing member to be acted upon by only a single one of the clutch members.

No. of Pages : 24 No. of Claims : 26

(12) PATENT APPLICATION PUBLICATION
(19) INDIA
(22) Date of filing of Application :22/12/2014
(21) Application No.10990/DELNP/2014 A
(43) Publication Date : 22/05/2015

(54) Title of the invention : LOCKING DIFFERENTIAL ASSEMBLY

(51) International classification :B60K17/16,F16H48/20
(31) Priority Document No :61/755939
(32) Priority Date :23/01/2013
(33) Name of priority country :U.S.A.
(86) International Application No :PCT/US2014/012702
Filing Date :23/01/2014
(87) International Publication No :WO 2014/116802
(61) Patent of Addition to Application Number :NA
Filing Date :NA
(62) Divisional to Application Number :NA
Filing Date :NA

(71)**Name of Applicant :**
1)EATON CORPORATION
Address of Applicant :1000 Eaton Boulevard Cleveland OH 44122 U.S.A.
(72)**Name of Inventor :**
1)COCHREN Steven J.
2)FRAZIER Daniel Stanley
3)HILLMAN Chad Robert
4)VANDERVOORT John Kimmel

(57) Abstract :
A locking differential assembly includes a differential case defining an axis of rotation and a gear chamber. A first side gear is at a first end of the differential case. A second side gear is at a second end of the differential case opposite the first end for selectable rotation relative to the differential case. At least two pinion gears are rotatably supported in the gear chamber in meshing engagement with the first side gear and the second side gear. A solenoid is at the first end. A plunger is selectably magnetically actuatable by the solenoid. A lock ring is selectably engagable with the second side gear to selectably prevent the side gear from rotating relative to the differential case. At least two relay rods are each connected to the plunger and to the lock ring to cause the lock ring to remain a fixed predetermined distance from the plunger.

No. of Pages : 34 No. of Claims : 24

(12) PATENT APPLICATION PUBLICATION
(19) INDIA
(22) Date of filing of Application :07/01/2014
(21) Application No.115/DELNP/2014 A
(43) Publication Date : 22/05/2015

(54) Title of the invention : COMPOSITE PROTECTIVE LAYER FOR LITHIUM METAL ANODE AND METHOD OF MAKING THE SAME

(51) International classification :H01M4/04,H01M4/134,H01M4/1395
(31) Priority Document No :201110194785.7X
(32) Priority Date :12/07/2011
(33) Name of priority country :China
(86) International Application No :PCT/US2012/042340
Filing Date :14/06/2012
(87) International Publication No :WO 2013/009429
(61) Patent of Addition to Application Number :NA
Filing Date :NA
(62) Divisional to Application Number :NA
Filing Date :NA

(71)**Name of Applicant :**
1)CORNING INCORPORATED
Address of Applicant :1 Riverfront Plaza Corning NY 14831 U.S.A.
2)SHANGHAI INSTITUTE OF CERAMICS CHINESE ACADEMY OF SCIENCES
(72)**Name of Inventor :**
1)BADDING Michael E.
2)HE Lin
3)HUANG Lezhi
4)LIU Yu
5)WEN Zhaoyin
6)WU Meifen

(57) Abstract :
The present disclosure relates to protected metal anode architecture and method of making the same providing a protected metal anode architecture comprising a metal anode; and a composite protection film formed over and in direct contact with the metal anode wherein the metal anode comprises a metal selected from the group consisting of an alkaline metal and an alkaline earth metal and the composite protection film comprises particles of an inorganic compound dispersed throughout a matrix of an organic compound. The present disclosure also provides a method of forming a protected metal anode architecture.

No. of Pages : 24 No. of Claims : 21

(12) PATENT APPLICATION PUBLICATION
(19) INDIA
(22) Date of filing of Application :20/12/2014
(21) Application No.10928/DELNP/2014 A
(43) Publication Date : 22/05/2015

(54) Title of the invention : VALVE ASSEMBLY FOR A TANK OF A VEHICLE

(51) International classification :F16K15/04,B60K15/035,B60K15/077
(31) Priority Document No :61/745673
(32) Priority Date :24/12/2012
(33) Name of priority country :U.S.A.
(86) International Application No :PCT/US2013/074864
Filing Date :13/12/2013
(87) International Publication No :WO 2014/105453
(61) Patent of Addition to Application Number :NA
Filing Date :NA
(62) Divisional to Application Number :NA
Filing Date :NA

(71)**Name of Applicant :**
1)EATON CORPORATION
Address of Applicant :1000 Eaton Boulevard Cleveland OH 44122 U.S.A.
(72)**Name of Inventor :**
1)WALKOWSKI Paul Douglas
2)MILLS Vaughn Kevin

(57) Abstract :
A valve assembly (10) for a tank (12) of a vehicle is disclosed. A valve body (16) is adapted to be attached to the tank (12). A seat (22) is disposed inside the valve body (16) and defines an outlet (28) for venting the tank (12). A float (38) is disposed inside the valve body (16) and is movable between a first position and a second position relative to the valve body (16) in response to a liquid fluid level (40) inside the tank (12). A support (54) is coupled to the float (38) and is movable with the float (38) between the first and second positions. A sealing member (60) is attached to the support (54) and has an engagement portion (64) supported by a base (62) to define a space (66) between the engagement portion (64) and the support (54) to allow movement of the engagement portion (64) between an initial position when in the first position and a displaced position when in the second position.

No. of Pages : 27 No. of Claims : 15

(12) PATENT APPLICATION PUBLICATION
(19) INDIA
(22) Date of filing of Application :20/12/2014
(21) Application No.10929/DELNP/2014 A
(43) Publication Date : 22/05/2015

(54) Title of the invention : VALVE ASSEMBLY FOR A TANK OF A VEHICLE AND METHOD OF CREATING A VACUUM IN THE TANK

(51) International classification :B60K15/077,F02M37/00,F16K17/04
(31) Priority Document No :61/745675
(32) Priority Date :24/12/2012
(33) Name of priority country :U.S.A.
(86) International Application No :PCT/US2013/074862
Filing Date :13/12/2013
(87) International Publication No :WO 2014/105452
(61) Patent of Addition to Application Number :NA
Filing Date :NA
(62) Divisional to Application Number :NA
Filing Date :NA

(71)**Name of Applicant :**
1)EATON CORPORATION
Address of Applicant :1000 Eaton Boulevard Cleveland OH 44122 U.S.A.
(72)**Name of Inventor :**
1)MILLS Vaughn Kevin

(57) Abstract :
A valve assembly (12) for a tank (14) of a vehicle and a method (1000) of creating a vacuum are disclosed. A valve body (30) defines a cavity (32) and an outlet (36) in fluid communication with the cavity (32) for venting the tank (14). The assembly (12) also includes a seat (38) disposed in the cavity (32) of the valve body (30). The seat (38) separates the cavity (32) into first and second cavity portions (40 42). The seat (38) defines an aperture (44) to provide fluid communication between the first and second cavity portions (40 42). The assembly (12) further includes a cover device (54) disposed between the seat (38) and the outlet (36). The cover device (54) defines at least one hole (56) therethrough. The cover device (54) is movable between a rest position engaging the seat (38) to minimize fluid communication between the aperture (44) and the hole (56) and an actuated position spaced from the seat (38) to increase fluid communication between the aperture (44) and the hole (56) when a vacuum is created in the first cavity portion (40).

No. of Pages : 29 No. of Claims : 15

(12) PATENT APPLICATION PUBLICATION
(21) Application No.123/DEL/2012 A
(19) INDIA
(22) Date of filing of Application :13/01/2012
(43) Publication Date : 22/05/2015

(54) Title of the invention : FAMILY OF FASTENING ELEMENTS, CHECK GAUGES AND METHOD FOR CONTROLLING THE CHOICE OF THE LENGTH OF A FASTENING ELEMENT

(51) International classification :B23F
(31) Priority Document No :11 50951
(32) Priority Date :07/02/2011
(33) Name of priority country :France
(86) International Application No :NA
Filing Date :NA
(87) International Publication No :NA
(61) Patent of Addition to Application Number :NA
Filing Date :NA
(62) Divisional to Application Number :NA
Filing Date :NA

(71)**Name of Applicant :**
1)LISI AEROSPACE
Address of Applicant :42/52 QUAI DE LA RAPEE, 75583 PARIS CEDEX 12, FRANCE
(72)**Name of Inventor :**
1)NICOLAS GUERIN
2)SEBASTIEN LANGLAIS

(57) Abstract :
The invention refers to a family of fastening devices including at least two fastening elements (101, 121), each one of said elements extending according to a first axis (102) and including a head (103), a smooth body (104) and a shaped end portion (105) which are aligned, said shaping of the end portion consisting in providing a thread or crimping grooves, a frontal face (106) of the shaped end portion (105) having a cavity (107) extending parallel to the first axis (102) as far as a bottom (108), said fastening elements having shaped identical average external diameters, the fastening elements having different maximum grips (Gmax), said maximum grip corresponding to the length of the smooth body (104) according to the first axis (102) between the head (103) and the limit (170) between said body and the shaped end portion (105), the family being configured so that the distance (109') according to the first axis (102) between the bottom (108) of the cavity (107) and the limit (170) between the body and the shaped end portion is identical for all the fastening elements (101, 121). The invention refers moreover to a unit (100) including such a family of fastening devices and a check gauge (150), as well as a method for checking of the choice of the length of a fastening element (101, 121), by means of the check gauge (150).

No. of Pages : 24 No. of Claims : 13

(12) PATENT APPLICATION PUBLICATION
(19) INDIA
(22) Date of filing of Application :01/01/2015
(21) Application No.12/DELNP/2015 A
(43) Publication Date : 22/05/2015

(54) Title of the invention : CURRENT CONTROL FOR ELECTROTRANSPORT DRUG DELIVERY

(51) International classification :A61N1/30,A61M37/00
(31) Priority Document No :13/493314
(32) Priority Date :11/06/2012
(33) Name of priority country :U.S.A.
(86) International Application No :PCT/US2013/029114
Filing Date :05/03/2013
(87) International Publication No :WO 2013/187951
(61) Patent of Addition to Application Number :NA
Filing Date :NA
(62) Divisional to Application Number :NA
Filing Date :NA

(71)**Name of Applicant :**
1)INCLINE THERAPEUTICS INC.
Address of Applicant :900 Saginaw Drive Suite 200 Redwood City CA 94063 U.S.A.
2)ALZA CORPORATION
(72)**Name of Inventor :**
1)WHITE Bradley E.
2)HAYTER Paul
3)LEMKE John
4)SATRE Scot
5)CHEN Corinna X
6)READ Brian W.
7)DOUGHERTY Jason E.

(57) Abstract :
Devices systems and methods for controlling the application of current and/or voltage to deliver drug from patient contacts of an electrotransport drug delivery device by indirectly controlling and/or monitoring the applied current without directly measuring from the cathode of the patient terminal. In particular described herein are electrotransport drug delivery systems including constant current delivery systems having a feedback current and/or voltage control module that is isolated from the patient contacts (e.g. anodes and cathodes). The feedback module may be isolated by a transistor from the patient contacts; feedback current and/or voltage control measurements may be performed at the transistor rather than at the patient contact (e.g. cathode).

No. of Pages : 22 No. of Claims : 23

(12) PATENT APPLICATION PUBLICATION
(21) Application No.120/DEL/2012 A
(19) INDIA
(22) Date of filing of Application :13/01/2012
(43) Publication Date : 22/05/2015

(54) Title of the invention : CONTROL APPARATUS FOR SERIES HYBRID VEHICLE

(51) International classification :H01S
(31) Priority Document No :2011-010629
(32) Priority Date :21/01/2011
(33) Name of priority country :Japan
(86) International Application No :NA
Filing Date :NA
(87) International Publication No : NA
(61) Patent of Addition to Application Number :NA
Filing Date :NA
(62) Divisional to Application Number :NA
Filing Date :NA

(71)**Name of Applicant :**
1)SUZUKI MOTOR CORPORATION
Address of Applicant :300 Takatsuka-cho Minami-ku Hamamatsu-shi Shizuoka-ken Japan
(72)**Name of Inventor :**
1)Akiyoshi OHNO

(57) Abstract :
A control apparatus for a series hybrid vehicle includes an engine a generator a battery and a drive motor increases an engine rpm according to an accelerator opening while maintaining a high fuel efficiency to give a driver an acceleration feeling because of the increased engine sound. A control means determines a target engine rpm based on an accelerator opening detected by an accelerator opening detecting means and sets as the target engine rpm an engine rpm at which a power generation efficiency is maximum when the accelerator opening detected by the accelerator opening detecting means is minimum and sets as the target engine rpm an engine rpm at which an output is maximum when the accelerator opening detected by the accelerator opening detecting means is maximum.

No. of Pages : 27 No. of Claims : 5

(12) PATENT APPLICATION PUBLICATION
(19) INDIA
(22) Date of filing of Application :07/01/2014
(21) Application No.120/DELNP/2014 A
(43) Publication Date : 22/05/2015

(54) Title of the invention : POLYCARBONATE COMPOSITIONS HAVING ENHANCED OPTICAL PROPERTIES METHODS OF MAKING AND ARTICLES COMPRISING THE POLYCARBONATE COMPOSITIONS

(51) International classification :C07C37/20,C07C37/68,C07C39/16
(31) Priority Document No :61/515365
(32) Priority Date :05/08/2011
(33) Name of priority country :U.S.A.
(86) International Application No :PCT/IB2012/053994
Filing Date :03/08/2012
(87) International Publication No :WO 2013/021332
(61) Patent of Addition to Application Number :NA
Filing Date :NA
(62) Divisional to Application Number :NA
Filing Date :NA

(71)**Name of Applicant :**
1)SABIC INNOVATIVE PLASTICS IP B.V.
Address of Applicant :Plasticslaan 1 NL 4612PX Bergen op Zoom Netherlands
(72)**Name of Inventor :**
1)DE BROUWER Johannes
2)EIJSBOUTS Paulus Johannes Maria
3)BELFADHEL Hatem Abdallah
4)VAN DEN BOGERD Jos Arie

(57) Abstract :
In some embodiments a composition comprises a bisphenol A polycarbonate wherein a molded article of the composition has transmission level greater than or equal to 90.0% at 2.5 mm thickness as measured by ASTM D1003 00 and a yellow index (YI) less than or equal to 1.5 as measured by ASTM D1925.

No. of Pages : 56 No. of Claims : 20

(12) PATENT APPLICATION PUBLICATION
(19) INDIA
(22) Date of filing of Application :08/01/2014
(21) Application No.143/DELNP/2014 A
(43) Publication Date : 22/05/2015

(54) Title of the invention : LITHIUM ION BATTERIES USING DISCRETE CARBON NANOTUBES METHODS FOR PRODUCTION THEREOF AND PRODUCTS OBTAINED THEREFROM

(51) International classification :H01M4/62,H01M4/134,H01M10/0525
(31) Priority Document No :61/500560
(32) Priority Date :23/06/2011
(33) Name of priority country :U.S.A.
(86) International Application No :PCT/US2012/043534
Filing Date :21/06/2012
(87) International Publication No :WO 2012/177865
(61) Patent of Addition to Application Number :NA
Filing Date :NA
(62) Divisional to Application Number :NA
Filing Date :NA

(71)**Name of Applicant :**
1)MOLECULAR REBAR DESIGN LLC
Address of Applicant :13477 Fitzhugh Road Austin TX 78736 U.S.A.
(72)**Name of Inventor :**
1)BOSNYAK Clive P.
2)SWOGGER Kurt W.

(57) Abstract :
Compositions and methods of obtaining them useful for lithium ion batteries comprising discrete oxidized carbon nanotubes having attached to their surface lithium ion active materials in the form of nanometer sized crystals or layers. The composition can further comprise graphene or oxygenated graphene.

No. of Pages : 20 No. of Claims : 12

(12) PATENT APPLICATION PUBLICATION
(21) Application No.148/DELNP/2014 A
(19) INDIA
(22) Date of filing of Application :08/01/2014
(43) Publication Date : 22/05/2015

(54) Title of the invention : DRAG HEAD AND TRAILING SUCTION HOPPER DREDGER

(51) International classification :E02F3/88,E02F3/92,E21C35/187
(31) Priority Document No :2007072
(32) Priority Date :08/07/2011
(33) Name of priority country :Netherlands
(86) International Application No :PCT/NL2012/050474
Filing Date :04/07/2012
(87) International Publication No :WO 2013/009172
(61) Patent of Addition to Application Number :NA
Filing Date :NA
(62) Divisional to Application Number :NA
Filing Date :NA

(71)**Name of Applicant :**
1)IHC HOLLAND IE B.V.
Address of Applicant :Molendijk 94 NL 3361 EP Sliedrecht Netherlands
(72)**Name of Inventor :**
1)WEZEMER Serge

(57) Abstract :
The invention relates to a drag head (100) for dredging material (2) from the bed (3) of a body of water and transporting the material (2) to a suction tube (120). The drag head (100) is arranged to be dragged over the bed (3) in a dragging direction (D). The drag head (100) comprises a suction section (110) in which an underpressure can be created to suck up the material (2) from the bed (3) through a suction opening (113) into a suction chamber (112). A heel section (111) guides the drag head (100) along the bed (3). The suction section (110) is preferably rotatably connected to the heel section (111). The suction section (110) also comprises an outlet (114) for transporting the material (2) towards the suction tube (120).

No. of Pages : 19 No. of Claims : 21

(12) PATENT APPLICATION PUBLICATION
(19) INDIA
(22) Date of filing of Application :13/01/2012
(21) Application No.122/DEL/2012 A
(43) Publication Date : 22/05/2015

(54) Title of the invention : RECORDING MEDIUM AND METHOD FOR MANUFACTURING RECORDING MEDIUM

(51) International classification :H03M
(31) Priority Document No :P2011-009383
(32) Priority Date :20/01/2011
(33) Name of priority country :Japan
(86) International Application No :NA
Filing Date :NA
(87) International Publication No :NA
(61) Patent of Addition to Application Number :NA
Filing Date :NA
(62) Divisional to Application Number :NA
Filing Date :NA

(71)**Name of Applicant :**
1)SONY CORPORATION
Address of Applicant :1-7-1 KONAN, MINATO-KU, TOKYO, JAPAN
(72)**Name of Inventor :**
1)KATSUYA TONOSAKI
2)TAKESHI GOUKO

(57) Abstract :
A recording medium includes a substrate having a label-side surface on one side and a recording layer for recording and reproducing information on the other side. The label-side surface of the substrate has a mirror surface portion and a rough surface portion, a step having a step height of 10 μm or less is formed between the mirror surface portion and the rough surface portion, and an average roughness of the rough surface portion is between 10 μm and 2 μm, inclusive. Visible information is formed on the label-side surface by using the mirror surface portion and the rough surface portion.

No. of Pages : 32 No. of Claims : 5

(12) PATENT APPLICATION PUBLICATION
(19) INDIA
(22) Date of filing of Application :07/01/2014
(21) Application No.122/DELNP/2014 A
(43) Publication Date : 22/05/2015

(54) Title of the invention : A PROCESS AND A REACTION APPARATUS FOR THE GASIFICATION OF WET BIOMASS

(51) International classification :C10J3/78
(31) Priority Document No :1039007
(32) Priority Date :26/08/2011
(33) Name of priority country :Netherlands
(86) International Application No :PCT/EP2012/066198
Filing Date :20/08/2012
(87) International Publication No :WO 2013/030026
(61) Patent of Addition to Application Number :NA
Filing Date :NA
(62) Divisional to Application Number :NA
Filing Date :NA

(71)**Name of Applicant :**
1)GENSOS HOLDING B.V.
Address of Applicant :Wijdenes Spaansweg 57 NL 1764 GK Breezand Netherlands
(72)**Name of Inventor :**
1)HARINCK John
2)SMIT Klaas Gerrit

(57) Abstract :
A process for the gasification of wet biomass. The process comprises heating wet biomass at a pressure in the range of from 22.1 MPa to 35 MPa. The wet biomass is heated from a temperature of at most T to a temperature of at least T by heat exchange with a first heating fluid. The gasification product is further heated. The further heated gasification product is used as the first heating fluid upon which the further heated gasification product is cooled down from a temperature of at least T to a temperature of at most T. The temperatures T T T and T can be calculated by using certain mathematical formulae. Also claimed: a reaction apparatus for the gasification of wet biomass.

No. of Pages : 32 No. of Claims : 21

(12) PATENT APPLICATION PUBLICATION
(19) INDIA
(22) Date of filing of Application :08/01/2014
(21) Application No.136/DELNP/2014 A
(43) Publication Date : 22/05/2015

(54) Title of the invention : COMPOSITIONS METHODS AND USES

(51) International classification	:C10M171/00,C10L1/00,C10N30/20
(31) Priority Document No	:11250586.2
(32) Priority Date	:09/06/2011
(33) Name of priority country	:EPO
(86) International Application No	:PCT/EP2012/060368
Filing Date	:01/06/2012
(87) International Publication No	:WO 2012/168151
(61) Patent of Addition to Application Number	:NA
Filing Date	:NA
(62) Divisional to Application Number	:NA
Filing Date	:NA

(71)**Name of Applicant :**
1)CASTROL LIMITED
Address of Applicant :Wakefield House Pipers Way Swindon Wiltshire SN3 1RE U.K.
(72)**Name of Inventor :**
1)CHAHINE Samir
2)WEST Kevin Richard

(57) Abstract :
Oil soluble dyes which comprise at least one chromophore which is incarcerated at least partially within at least one macrocycle have been found to resist thermal and/or chemical degradation and to be useful in lubricating oil compositions fuel compositions and additive concentrates therefor for detecting leakage of lubricating oil composition in a lubricated internal combustion engine and may be used for detecting the leakage of lubricating oil composition from one lubricated part of an internal combustion engine to another lubricated part of the engine and/or for detecting the ingress of components from the combustion chamber of an internal combustion engine into the crankcase of the internal combustion engine and/or for detecting.

No. of Pages : 54 No. of Claims : 14

(12) PATENT APPLICATION PUBLICATION
(19) INDIA
(22) Date of filing of Application :18/02/2013
(21) Application No.1504/DELNP/2013 A
(43) Publication Date : 22/05/2015

(54) Title of the invention : INTERVERTEBRAL IMPLANT FIXATION ASSEMBLY

(51) International classification :A61F2/30,A61F2/44
(31) Priority Document No :61/392638
(32) Priority Date :13/10/2010
(33) Name of priority country :U.S.A.
(86) International Application No :PCT/US2011/055670
Filing Date :11/10/2011
(87) International Publication No :WO 2012/051132
(61) Patent of Addition to Application Number :NA
Filing Date :NA
(62) Divisional to Application Number :NA
Filing Date :NA

(71)**Name of Applicant :**
1)SYNTHES USA LLC
Address of Applicant :1302 Wrights Lane East West Chester PA 19380 U.S.A.
2)SYNTHES GMBH
(72)**Name of Inventor :**
1)VOISARD Cyril
2)KRAFT Markus
3)LECHMANN Beat

(57) Abstract :
The application discloses an implant assembly (20) comprising an implant body (24) with first and second bone contacting surfaces (28 30) spaced apart and at least one of said contacting surfaces defining at least one recess (32) that extends into a first side of the implant body (24) but not through the implant body (24) and said at least one recess (32) is configured to receive a head (42) of a bone anchor (22) so that a shaft (36) of the bone anchor (22) extends out from the first side. Furthermore a method for fixation said intervertebral implant including the steps of: a) applying a spreading force to a first and second adjacent vertebral bodies (38 40); b) removing the intervertebral disc between the adjacent first and second vertebral bodies (38 40); c) inserting a shaft (36) of the bone anchors (22) into the vertebral bodies (38 40) and fixing a head (42) of the bone anchors (22) to an intervertebral implant (20).

No. of Pages : 37 No. of Claims : 40

(12) PATENT APPLICATION PUBLICATION
(21) Application No.1/DELNP/2015 A
(19) INDIA
(22) Date of filing of Application :01/01/2015
(43) Publication Date : 22/05/2015

(54) Title of the invention : DIGITAL CURRENT EQUALIZING DEVICE ANALOG CURRENT EQUALIZING DEVICE CURRENT EQUALIZING METHOD AND SYSTEM

(51) International classification :H05B37/02
(31) Priority Document No :201210450994.8
(32) Priority Date :12/11/2012
(33) Name of priority country :China
(86) International Application No :PCT/CN2013/077719
Filing Date :21/06/2013
(87) International Publication No :WO 2013/167003
(61) Patent of Addition to Application Number :NA
Filing Date :NA
(62) Divisional to Application Number :NA
Filing Date :NA

(71)**Name of Applicant :**
1)ZTE CORPORATION
Address of Applicant :ZTE Plaza Keji Road South Hi Tech Industrial Park Nanshan Shenzhen Guangdong 518057 China
(72)**Name of Inventor :**
1)YANG Yundong
2)ZHENG Dacheng
3)WU Qiong
4)WANG Jingsi
5)CHENG Zhirong
6)WANG Hong

(57) Abstract :
Provided are a digital current equalizing device an analog current equalizing device a current equalizing method and a system. The digital current equalizing device comprises: an output current sampling amplifying module (102) a digital processing module (104) and a main power frequency conversion module (106). An input terminal of the output current sampling amplifying module (102) connects to an output loop of a power supply and an output terminal of the output current sampling amplifying module (102) connects to a current equalizing bus through a resistor R0 wherein the digital processing module (104) is configured to adjust an output voltage reference signal Vr according to a difference between an output voltage signal V2 of the output current sampling amplifying module (102) and an voltage signal Vbus of the current equalizing bus and the main power frequency conversion module (106) is controlled to adjust the voltage according to the adjusted output voltage reference signal Vr . The technical solution is easy to implement and can improve the reliabilities of each power supply module and the whole power supply system.

No. of Pages : 44 No. of Claims : 13

(12) PATENT APPLICATION PUBLICATION
(21) Application No.10/DELNP/2015 A
(19) INDIA
(22) Date of filing of Application :01/01/2015
(43) Publication Date : 22/05/2015

(54) Title of the invention : CLEANABLE CONVEYOR FRAME ASSEMBLY

(51) International classification :B65G21/02,B65G15/00
(31) Priority Document No :61/662165
(32) Priority Date :20/06/2012
(33) Name of priority country :U.S.A.
(86) International Application No :PCT/US2013/046686
Filing Date :20/06/2013
(87) International Publication No :WO 2013/192366
(61) Patent of Addition to Application Number :NA
Filing Date :NA
(62) Divisional to Application Number :NA
Filing Date :NA

(71)**Name of Applicant :**
1)LAITRAM L.L.C.
Address of Applicant :Legal Department 200 Laitram Lane Harahan Louisiana 70123 U.S.A.
(72)**Name of Inventor :**
1)GUERNSEY Kevin W.
2)LANDRUM John F.
3)DRAPANAS Mark T.
4)THOMAS Manoj

(57) Abstract :
A cleanable belt conveyor and a method for making a cleanable belt conveyor having a simplified frame design. One version of such a conveyor comprises a frame and an insertable conveyor belt support. Another version comprises a modular frame formed by a plurality of shafts connected using connectors. Another version comprises a unitary frame and carryway structure whereby the carryway for supporting a conveyor belt constitutes support structure for the frame. Another version comprises a carryway support rail including an integral curved reversing element. Another version comprises components connected through curvaceous connecting members.

No. of Pages : 87 No. of Claims : 40

(12) PATENT APPLICATION PUBLICATION
(21) Application No.118/DELNP/2014 A
(19) INDIA
(22) Date of filing of Application :07/01/2014
(43) Publication Date : 22/05/2015

(54) Title of the invention : METHOD FOR DIFFUSING A GAS TURBINE COMPRESSION STAGE AND DIFFUSION STAGE FOR IMPLEMENTING SAME

(51) International classification :F04D29/44
(31) Priority Document No :1155370
(32) Priority Date :20/06/2011
(33) Name of priority country :France
(86) International Application No :PCT/FR2012/051367
Filing Date :19/06/2012
(87) International Publication No :WO 2012/175855
(61) Patent of Addition to Application Number :NA
Filing Date :NA
(62) Divisional to Application Number :NA
Filing Date :NA

(71)**Name of Applicant :**
1)TURBOMECA
Address of Applicant :BP 2 F 64511 Bordes France
(72)**Name of Inventor :**
1)TARNOWSKI Laurent
2)BULOT Nicolas
3)PORODO Jr´me

(57) Abstract :
The aim of the invention is to produce an airflow by positioning flanges the shapes of which are optimized. Non axisymmetrical shapes in the direction of flow and in the tangential direction are thus provided. According to one embodiment a radial or mixed gas turbine compressor diffusion stage comprises a wheel consisting of two flanges (9) between which the fluid centrifugally or inclinedly flows from the center towards the periphery. Vanes (60) of a grating are distributed among the flanges (9) in order to channel the flow of the fluid between the leading edges (6a) of said vanes (60) on the central side and the trailing edges on the peripheral side. At least one of the flanges (9) has an inner surface (9i) comprising at least one area (Z1 Z2) having alternating concave (91) and convex (92) curvatures between two adjacent vanes (60) in at least one of two substantially perpendicular directions namely in the direction of flow (F) along the vanes (60) and in an inter vane tangential direction.

No. of Pages : 13 No. of Claims : 9

(12) PATENT APPLICATION PUBLICATION
(19) INDIA
(22) Date of filing of Application :08/01/2014
(21) Application No.164/DELNP/2014 A
(43) Publication Date : 22/05/2015

(54) Title of the invention : STEAM TURBINE COMPRISING A THRUST BALANCE PISTON

(51) International classification :F01D3/04
(31) Priority Document No :11176574.9
(32) Priority Date :04/08/2011
(33) Name of priority country :EPO
(86) International Application No :PCT/EP2012/065065
Filing Date :01/08/2012
(87) International Publication No :WO 2013/017634
(61) Patent of Addition to Application Number :NA
Filing Date :NA
(62) Divisional to Application Number :NA
Filing Date :NA

(71)**Name of Applicant :**
1)SIEMENS AKTIENGESELLSCHAFT
Address of Applicant :Wittelsbacherplatz 2 80333 M¼nchen Germany
(72)**Name of Inventor :**
1)HOLDER Martina
2)LENZ Christian
3)PIEPER Norbert
4)P–TTER Rudolf
5)SCHLEHUBER Dominic
6)ZANDER Uwe

(57) Abstract :
The invention concerns a cooling mechanism for a steam turbine (1) which envisages in the area of the valve connection (40) a cooling channel (37) into which cooling steam flows from the flow channel (9) the steam then being fed as cooling steam in the area of the thrust balance piston (4).

No. of Pages : 17 No. of Claims : 8

(12) PATENT APPLICATION PUBLICATION
(19) INDIA
(22) Date of filing of Application :08/01/2014
(21) Application No.146/DELNP/2014 A
(43) Publication Date : 22/05/2015

(54) Title of the invention : DISPENSING CONTAINER WITH ENHANCED APPEARANCE

(51) International classification :B05B11/00
(31) Priority Document No :NA
(32) Priority Date :NA
(33) Name of priority country :NA
(86) International Application No :PCT/US2011/046135
Filing Date :01/08/2011
(87) International Publication No :WO 2013/019207
(61) Patent of Addition to Application Number :NA
Filing Date :NA
(62) Divisional to Application Number :NA
Filing Date :NA

(71)**Name of Applicant :**
1)COLGATE PALMOLIVE COMPANY
Address of Applicant :300 Park Avenue New York New York 10022 U.S.A.
(72)**Name of Inventor :**
1)CRAWFORD John C.
2)DILLON Rensl
3)GREER Lester

(57) Abstract :
A container comprising a body portion and a neck portion the neck portion having a pump dispenser thereon the pump dispenser comprising a pump mechanism a dip tube on one end of the pump mechanism a pump outlet on another end of the pump mechanism the dip tube extending from the pump mechanism into the body portion the body portion containing a liquid and a motion element the motion element being captive within the dip tube and adapted to be movable within the dip tube under the action of liquid flow through the dip tube and at least a portion of the body portion being transparent a decorative effect resulting from the motion of the motion element being visible from an exterior of the container. Also disclosed is a method of providing an enhanced display by a dispensing container during dispensing of a liquid from the container.

No. of Pages : 28 No. of Claims : 50

(12) PATENT APPLICATION PUBLICATION
(19) INDIA
(22) Date of filing of Application :08/01/2014
(21) Application No.151/DELNP/2014 A
(43) Publication Date : 22/05/2015

(54) Title of the invention : SYSTEM AND METHOD FOR CONTROLLING POWER OUTPUT FROM A WIND TURBINE OR WIND POWER PLANT

(51) International classification :F03D7/02,F03D7/04
(31) Priority Document No :PA 2011 70343
(32) Priority Date :30/06/2011
(33) Name of priority country :Denmark
(86) International Application No :PCT/DK2012/050212
Filing Date :26/06/2012
(87) International Publication No :WO 2013/000468
(61) Patent of Addition to Application Number :NA
Filing Date :NA
(62) Divisional to Application Number :NA
Filing Date :NA

(71)**Name of Applicant :**
1)VESTAS WIND SYSTEMS A/S
Address of Applicant :Hedeager 44 DK 8200 Aarhus N Denmark
(72)**Name of Inventor :**
1)BOWYER Robert
2)PALMER Christopher
3)SPRUCE Chris

(57) Abstract :
A LIDAR or other remote sensing apparatus is mounted on a wind turbine to sense one or more wind parameters. An extreme event detector processing signals from the LIDAR to determine whether a given sensed parameter will when it arrives at the turbine exceed a predetermined value and represent an extreme event. On detection of an extreme event the detector outputs an extreme event signal to a controller. The controller controls overrating of the turbine in response to a variety of sensed parameters and selectively operates the turbine at above rated wind speed. On receipt of the extreme event signal the overrating is overridden to prevent damage to turbine components. The controller may be a power plant controller and the override signal may override only overrating at the turbine which has detected the extreme event or a plurality of turbines.

No. of Pages : 28 No. of Claims : 15

(12) PATENT APPLICATION PUBLICATION
(19) INDIA
(22) Date of filing of Application :08/01/2014
(21) Application No.165/DELNP/2014 A
(43) Publication Date : 22/05/2015

(54) Title of the invention : VEHICLE SPECIFYING SYSTEM AND VEHICLE SPECIFYING DEVICE

(51) International classification :G08G1/16,B60R21/00,G08G1/09
(31) Priority Document No :NA
(32) Priority Date :NA
(33) Name of priority country :NA
(86) International Application No :PCT/JP2011/067003
Filing Date :26/07/2011
(87) International Publication No :WO 2013/014755
(61) Patent of Addition to Application Number :NA
Filing Date :NA
(62) Divisional to Application Number :NA
Filing Date :NA

(71)**Name of Applicant :**
1)TOYOTA JIDOSHA KABUSHIKI KAISHA
Address of Applicant :1 Toyota cho Toyota shi Aichi 4718571 Japan
(72)**Name of Inventor :**
1)NEMOTO Yusuke

(57) Abstract :
A vehicle specifying system (1) comprises: a communication device (24 24a) for receiving other vehicle information of another vehicle in the periphery of the host vehicle; a detection device (21 24a) for detecting another vehicle in the periphery of the host vehicle; and a vehicle specifying device (10) for specifying a vehicle transmitting other vehicle information on the basis of the other vehicle information received by the communication device (24 24a) and the detection results obtained by the detection device (21 21a) wherein the vehicle specifying device (10) is characterized in being capable of switching between an acquisition mode for acquiring the transmitting vehicle on the basis of the other vehicle information received by the communication device (24 24a) and the detection results obtained by the detection device (21 21a) and a tracking mode for specifying the transmitting vehicle on the basis of the transmitting vehicle motion information which is based on the other vehicle received by the communication device (24 24a). The accuracy of specifying a communication vehicle can thereby be improved.

No. of Pages : 57 No. of Claims : 6

(12) PATENT APPLICATION PUBLICATION
(21) Application No.1703/DELNP/2015 A
(19) INDIA
(22) Date of filing of Application :02/03/2015
(43) Publication Date : 22/05/2015

(54) Title of the invention : A METHOD AND APPARATUS FOR INTER CELL INTERFERENCE COORDINATION IN A WIRELESS COMMUNICATION NETWORK

(51) International classification	:H04W72/12,H04W72/08,H04W24/02
(31) Priority Document No	:13/561838
(32) Priority Date	:30/07/2012
(33) Name of priority country	:U.S.A.
(86) International Application No	:PCT/IB2013/056231
Filing Date	:29/07/2013
(87) International Publication No	:WO 2014/020526
(61) Patent of Addition to Application Number	:NA
Filing Date	:NA
(62) Divisional to Application Number	:NA
Filing Date	:NA

(71)**Name of Applicant :**
1)TELEFONAKTIEBOLAGET L M ERICSSON (PUBL)
Address of Applicant :S 164 83 Stockholm Sweden
(72)**Name of Inventor :**
1)DIMOU Konstantinos
2)LINDOFF Bengt

(57) Abstract :
One aspect of the teachings herein involves the advantageous use of learned statistical information to improve inter cell interference coordination ICIC. A network (20) uses historical signal quality measurements collected over time for wireless communication devices (36) operating within its coverage areas to identify those geographical areas where devices (36) generally experience significant levels of patterned interference. In an example case the network (20) develops a map of the geographical areas that are affected by the transmission patterns of neighboring nodes (26 30) and it applies the map to ICIC operations wherein the serving nodes associated with the affected areas incorporate knowledge of the interfering transmission patterns into the ongoing scheduling of devices (36) operating in the affected areas.

No. of Pages : 30 No. of Claims : 24

(12) PATENT APPLICATION PUBLICATION
(19) INDIA
(22) Date of filing of Application :20/12/2014
(21) Application No.10930/DELNP/2014 A
(43) Publication Date : 22/05/2015

(54) Title of the invention : LOCKING DIFFERENTIAL HAVING DAMPENING COMMUNICATION SPRING

(51) International classification :F16H48/14
(31) Priority Document No :61/694479
(32) Priority Date :29/08/2012
(33) Name of priority country :U.S.A.
(86) International Application No :PCT/US2013/056585
Filing Date :26/08/2013
(87) International Publication No :WO 2014/035868
(61) Patent of Addition to Application Number :NA
Filing Date :NA
(62) Divisional to Application Number :NA
Filing Date :NA

(71)**Name of Applicant :**
1)EATON CORPORATION
Address of Applicant :1000 Eaton Boulevard Cleveland OH 44122 U.S.A.
(72)**Name of Inventor :**
1)CREAGER Christopher Wayne

(57) Abstract :
A locking differential for a vehicle includes a rotatable housing and a differential mechanism supported in the housing. The differential mechanism includes a pair of clutch members wherein each of the clutch members presents an inwardly directed face. Each face includes a groove disposed in spacing relationship with respect to the other. A cross pin is received in the groove and is operatively connected for rotation with the housing. A dampening communication spring is disposed over an outer circumference of the clutch members and cooperates with the cross pin to control interaction of the clutch members.

No. of Pages : 26 No. of Claims : 28

(12) PATENT APPLICATION PUBLICATION
(19) INDIA
(22) Date of filing of Application :20/12/2014
(21) Application No.10931/DELNP/2014 A
(43) Publication Date : 22/05/2015

(54) Title of the invention : LOW STROKE LENGTH LOCKING DIFFERENTIAL WITH HIGH LOCKING ENGAGEMENT LENGTH

(51) International classification :F16H48/30,F16H48/34
(31) Priority Document No :61/683298
(32) Priority Date :15/08/2012
(33) Name of priority country :U.S.A.
(86) International Application No :PCT/US2013/031989
Filing Date :15/03/2013
(87) International Publication No :WO 2014/028054
(61) Patent of Addition to Application Number :NA
Filing Date :NA
(62) Divisional to Application Number :NA
Filing Date :NA

(71)**Name of Applicant :**
1)EATON CORPORATION
Address of Applicant :Eaton Center 1000 Eaton Boulevard Cleveland OH 44122 U.S.A.
(72)**Name of Inventor :**
1)McMILLAN Patrick John
2)FISHER Daniel Philip

(57) Abstract :
A differential comprising a gear case a side gear an actuator and a collar. The gear case comprising a central axis and recesses. The side gear configured to rotate around the central axis. The side gear comprising radially outward extending locking members comprising side gear segments separated by plural grooves. The actuator surrounding the central axis. The collar configured to translate bi directionally along the central axis. The collar comprising ears and radially inward extending locking members comprising collar segments separated by plural grooves. The actuator is configured to move the collar relative to the side gear to move the ears axially in the recesses. When the actuator moves the collar to a locked position the collar segments are configured to engage the side gear segments. When the actuator moves the collar to an unlocked position the side gear segments are configured to pass through the grooves of the radially inward extending locking members.

No. of Pages : 19 No. of Claims : 16

(12) PATENT APPLICATION PUBLICATION
(19) INDIA
(22) Date of filing of Application :07/01/2014
(21) Application No.114/DELNP/2014 A
(43) Publication Date : 22/05/2015

(54) Title of the invention : LUBRICANT PROVIDING IMPROVED CLEANLINESS FOR TWO STROKE CYCLE ENGINES

(51) International classification :C10M141/06,C10N10/04,C10N40/26
(31) Priority Document No :61/505172
(32) Priority Date :07/07/2011
(33) Name of priority country :U.S.A.
(86) International Application No :PCT/US2012/044118
Filing Date :26/06/2012
(87) International Publication No :WO 2013/006303
(61) Patent of Addition to Application Number :NA
Filing Date :NA
(62) Divisional to Application Number :NA
Filing Date :NA

(71)**Name of Applicant :**
1)THE LUBRIZOL CORPORATION
Address of Applicant :29400 Lakeland Blvd. Wickliffe Ohio 44092 2298 U.S.A.
(72)**Name of Inventor :**
1)DOHNER Brent R.

(57) Abstract :
A lubricant composition comprising an oil of lubricating viscosity 0.1 to 2 percent by weight of a Mannich dispersant and 0.1 to 2 percent by weight of a succinimide dispersant wherein the succinimide dispersant provides at least about 40 parts per million by weight of nitrogen atoms to the lubricant composition provides cleanliness to a two stroke cycle engine.

No. of Pages : 21 No. of Claims : 22

(12) PATENT APPLICATION PUBLICATION
(21) Application No.1707/DELNP/2015 A
(19) INDIA
(22) Date of filing of Application :02/03/2015
(43) Publication Date : 22/05/2015

(54) Title of the invention : METHODS AND SYSTEMS FOR MEASURING AND USING THE OXIDATION REDUCTION POTENTIAL OF A BIOLOGICAL SAMPLE

(51) International classification :G01N33/48,G04F1/00
(31) Priority Document No :61/717511
(32) Priority Date :23/10/2012
(33) Name of priority country :U.S.A.
(86) International Application No :PCT/US2013/066432
Filing Date :23/10/2013
(87) International Publication No :WO 2014/066533
(61) Patent of Addition to Application Number :NA
Filing Date :NA
(62) Divisional to Application Number :NA
Filing Date :NA

(71)**Name of Applicant :**
1)LUOXIS DIAGNOSTICS INC.
Address of Applicant :5445 DTC Parkway Suite 925 Greenwood Village CO 80111 U.S.A.
(72)**Name of Inventor :**
1)BAR OR Raphael
2)BAR OR David
3)RAEL Leonard T.

(57) Abstract :
Methods and systems for measuring and using the oxidation reduction characteristics of a biological sample are provided. The system generally includes a test strip and a readout device. A fluid sample is placed in the test strip and the test strip is in turn operatively connected to the readout device. The readout device provides a controlled current that is sent across the fluid in the sample chamber. In addition the readout device identifies an inflection point or transition time at which the voltage between contacts of the test strip is changing at the highest rate. The oxidation reduction capacity of the sample is taken as the integral of the current profile from the time at which current begins to be supplied to the sample to the identified transition time.

No. of Pages : 102 No. of Claims : 314

(12) PATENT APPLICATION PUBLICATION
(19) INDIA
(22) Date of filing of Application :02/03/2015
(21) Application No.1708/DELNP/2015 A
(43) Publication Date : 22/05/2015

(54) Title of the invention : METHOD FOR DIAGNOSING RAILROAD COMPONENTS OF A RAILROAD NETWORK FOR RAIL TRANSPORT

(51) International classification :B61L27/00,G01M17/08
(31) Priority Document No :12184836.0
(32) Priority Date :18/09/2012
(33) Name of priority country :EPO
(86) International Application No :PCT/EP2013/067508
Filing Date :23/08/2013
(87) International Publication No :WO 2014/044485
(61) Patent of Addition to Application Number :NA
Filing Date :NA
(62) Divisional to Application Number :NA
Filing Date :NA

(71)**Name of Applicant :**
1)SIEMENS AKTIENGESELLSCHAFT
Address of Applicant :Wittelsbacherplatz 2 80333 M¼nchen Germany
(72)**Name of Inventor :**
1)FISCHER Erhard
2)MLLER Thomas
3)POPP Frank
4)PUNSTEIN Dirk
5)SCHULZE Christian
6)T–NSING Ekkehard

(57) Abstract :
The invention relates to a method and a system for diagnosing the operating state of one or more railroad components of a railroad network for rail transport said railroad components each comprising at least a first measuring device for measuring first measurement values of at least one measurement variable for describing the operating state of the railroad component said method comprising the following steps: measuring said first measurement values by means of said first measuring device measuring additional second measurement values which are independent of the operating state of the railroad components by means of at least one additional second measuring device transmitting the measurement values to a control center situated along the tracks evaluating the measurement values in the control center by means of a predefined algorithm and providing at least one result of the evaluation as an output.

No. of Pages : 24 No. of Claims : 10

(12) PATENT APPLICATION PUBLICATION
(19) INDIA
(22) Date of filing of Application :08/01/2014
(21) Application No.142/DELNP/2014 A
(43) Publication Date : 22/05/2015

(54) Title of the invention : ANTENNA OF INVERTED F ANTENNA TYPE INTEGRATED INTO A PRINTED CARD AND SYSTEM

(51) International classification :H01Q9/04
(31) Priority Document No :10 2011 106 936.8
(32) Priority Date :08/07/2011
(33) Name of priority country :Germany
(86) International Application No :PCT/EP2012/002846
Filing Date :06/07/2012
(87) International Publication No :WO 2013/007364
(61) Patent of Addition to Application Number :NA
Filing Date :NA
(62) Divisional to Application Number :NA
Filing Date :NA

(71)**Name of Applicant :**
1)JOHNSON CONTROLS AUTOMOTIVE ELECTRONICS SAS
Address of Applicant :10 avenue de lEntreprise F 95892 Cergy Pontoise Cedex France
(72)**Name of Inventor :**
1)LEGER Pascal

(57) Abstract :
The invention relates to an antenna of IFA (inverted F antenna) antenna type being integrated into a printed card the printed card having a main extension plane the antenna of IFA antenna type comprising: a first electrically conducting element serving as earth plane a second electrically conducting element serving as radiating element of the antenna an electrically conducting connection serving to short circuit the first electrically conducting element and the second electrically conducting element and an excitation element being in electrical contact with the second electrically conducting element the second electrically conducting element comprises a first part a second part and a third part in various planes of the printed card.

No. of Pages : 32 No. of Claims : 11

(12) PATENT APPLICATION PUBLICATION
(19) INDIA
(22) Date of filing of Application :08/01/2014
(21) Application No.152/DELNP/2014 A
(43) Publication Date : 22/05/2015

(54) Title of the invention : SHOT PROCESSING DEVICE

(51) International classification :B24C3/24,B24C1/00,B24C9/00
(31) Priority Document No :2011151104
(32) Priority Date :07/07/2011
(33) Name of priority country :Japan
(86) International Application No :PCT/JP2012/061113
Filing Date :25/04/2012
(87) International Publication No :WO 2013/005469
(61) Patent of Addition to Application Number :NA
Filing Date :NA
(62) Divisional to Application Number :NA
Filing Date :NA

(71)**Name of Applicant :**
1)SINTOKOGIO LTD.
Address of Applicant :11 11 Nishiki 1 chome Naka ku Nagoya shi Aichi 4600003 Japan
(72)**Name of Inventor :**
1)YAMAMOTO Masatoshi

(57) Abstract :
A shot processing device (10) is provided with: a cabinet (12); a rotary hanger (20); a revolving drive motor (24) that rotates the rotary hanger (20); a rotating drive motor (48) that rotates a hanger disposed in a chamber (42) positioned in projection material projection areas (18A to 18D) inside the cabinet (12) among a plurality of chambers (42) above the rotary hanger (20); centrifugal projection machines (52A to 52D) that carry out shot processing on workpieces (W) by projecting projection material in the chamber (42) positioned in the projection material projection areas (18A to 18D) among the plurality of chambers (42) radially outward from a rotating disk (34) that constitutes the rotary hanger (20); a plurality of bottom screw conveyors (68A 68B) that recover the projection material projected from the centrifugal projection machines (52A to 52D) and convey said material in a horizontal direction; and a plurality of bucket elevators (70A 70B) that convey the projection material conveyed by the bottom screw conveyors (68A 68B) upward.

No. of Pages : 41 No. of Claims : 5

(12) PATENT APPLICATION PUBLICATION
(19) INDIA
(22) Date of filing of Application :08/01/2014
(21) Application No.161/DELNP/2014 A
(43) Publication Date : 22/05/2015

(54) Title of the invention : VARIANT SUCROSE TRANSPORTER POLYPEPTIDES THAT ENABLE FASTER SUCROSE UTILIZATION IN BACTERIA

(51) International classification	:C07K14/195,C07K14/43,C12N15/31
(31) Priority Document No	:13/210488
(32) Priority Date	:16/08/2011
(33) Name of priority country	:U.S.A.
(86) International Application No	:PCT/US2012/051222
Filing Date	:16/08/2012
(87) International Publication No	:WO 2013/025945
(61) Patent of Addition to Application Number	:NA
Filing Date	:NA
(62) Divisional to Application Number	:NA
Filing Date	:NA

(71)**Name of Applicant :**
1)E. I. DU PONT DE NEMOURS AND COMPANY
Address of Applicant :1007 Market Street Wilmington Delaware 19899 U.S.A.
(72)**Name of Inventor :**
1)CHEN Qi
2)CHENG Qiong
3)LAI Jian Ping
4)RUEBLING JASS Kristin

(57) Abstract :
Variant sucrose transporter polypeptides that enable faster sucrose utilization in bacteria are described. Additionally variant or recombinant bacteria comprising these variant sucrose transporter polypeptides and methods of utilizing the bacteria to produce products such as glycerol and glycerol derived products are provided.

No. of Pages : 231 No. of Claims : 9

(12) PATENT APPLICATION PUBLICATION
(21) Application No.1711/DELNP/2015 A
(19) INDIA
(22) Date of filing of Application :02/03/2015
(43) Publication Date : 22/05/2015

(54) Title of the invention : INJECTABLE COMPOSITIONS COMPRISING LETROZOLE OR ANASTROZOLE

(51) International classification :A61K9/00,A61K47/20,A61K47/34
(31) Priority Document No :P 201231271
(32) Priority Date :03/08/2012
(33) Name of priority country :Spain
(86) International Application No :PCT/EP2013/065877
Filing Date :29/07/2013
(87) International Publication No :WO 2014/019972
(61) Patent of Addition to Application Number :NA
Filing Date :NA
(62) Divisional to Application Number :NA
Filing Date :NA

(71)**Name of Applicant :**
1)LABORATORIOS FARMAC‰UTICOS ROVI S.A.
Address of Applicant :C/ Juli¡n Camarillo 35 E 28037 Madrid Spain
(72)**Name of Inventor :**
1)FRANCO RODR□GUEZ Guillermo
2)GUTIERRO ADURIZ Ibon

(57) Abstract :
The present invention refers to a composition suitable for forming an intramuscular implant comprising a biodegradable thermoplastic polymer of polylactic acid (PLA) DMSO and an aromatase inhibitor compound a kit suitable for the in situ formation of the composition and its use as a medicine for treating breast cancer.

No. of Pages : 28 No. of Claims : 18

(12) PATENT APPLICATION PUBLICATION
(19) INDIA
(22) Date of filing of Application :02/03/2015
(21) Application No.1712/DELNP/2015 A
(43) Publication Date : 22/05/2015

(54) Title of the invention : MILL APPARATUS WITH UNDERSLUNG MILL UNITS

(51) International classification :B02C23/00
(31) Priority Document No :1213777.4
(32) Priority Date :31/07/2012
(33) Name of priority country :U.K.
(86) International Application No :PCT/GB2013/052052
Filing Date :31/07/2013
(87) International Publication No :WO 2014/020340
(61) Patent of Addition to Application Number :NA
Filing Date :NA
(62) Divisional to Application Number :NA
Filing Date :NA

(71)**Name of Applicant :**
1)INTERNATIONAL INNOVATIVE TECHNOLOGIES LIMITED
Address of Applicant :Unit 5 Queens Court Third Avenue Team Valley Trading Estate Gateshead Tyne and Wear NE11 0BU U.K.
(72)**Name of Inventor :**
1)ORD George

(57) Abstract :
A mill apparatus (1) comprises a frame (2) a mill unit (5) a mill drive (3) mounted on the frame (2) with the mill unit (5) attached to and suspended from the mill drive (3). The frame (2) supports a part of the mill unit (5) when in a state of disassembly and allows for removal and replacement of a part of the mill unit (5).

No. of Pages : 13 No. of Claims : 18

(12) PATENT APPLICATION PUBLICATION
(19) INDIA
(22) Date of filing of Application :13/01/2012
(21) Application No.129/DEL/2012 A
(43) Publication Date : 22/05/2015

(54) Title of the invention : EXHAUST GAS SYSTEM FOR A BUILDING MACHINE

(51) International classification :B21J
(31) Priority Document No :11000585.7
(32) Priority Date :25/01/2011
(33) Name of priority country :EPO
(86) International Application No :NA
Filing Date :NA
(87) International Publication No : NA
(61) Patent of Addition to Application Number :NA
Filing Date :NA
(62) Divisional to Application Number :NA
Filing Date :NA

(71)**Name of Applicant :**
1)Joseph Vgele AG
Address of Applicant :Joseph-Vgele-Strasse 1 67067 Ludwigshafen/Rhein Germany
(72)**Name of Inventor :**
1)Thomas SCHMIDT
2)Christian PAWLIK
3)Philipp STUMPF

(57) Abstract :
The invention relates to an exhaust gas system (1) for a building machine (100) specifically for a road finishing machine or a feeder comprising an engine compartment (2) with an engine hood (3) and an exhaust gas pipe (4) which carries off combustion gases from the engine (101) wherein the exhaust gas pipe (4) is mounted in the engine compartment (2) and ends underneath the engine hood (3).

No. of Pages : 12 No. of Claims : 15

(12) PATENT APPLICATION PUBLICATION
(19) INDIA
(22) Date of filing of Application :07/01/2014

(21) Application No.133/DELNP/2014 A
(43) Publication Date : 22/05/2015

(54) Title of the invention : A DISPENSER ASSEMBLY

(51) International classification :A47K10/38,B65H18/04,B65H75/18
(31) Priority Document No :11005581.1
(32) Priority Date :08/07/2011
(33) Name of priority country :EPO
(86) International Application No :PCT/IB2012/001327
Filing Date :06/07/2012
(87) International Publication No :WO 2013/008071
(61) Patent of Addition to Application Number :NA
Filing Date :NA
(62) Divisional to Application Number :NA
Filing Date :NA

(71)**Name of Applicant :**
1)SCA TISSUE FRANCE
Address of Applicant :60 avenue de l Europe F 92270 Bois Colombes France
(72)**Name of Inventor :**
1)CATTACIN Gilles
2)MARIETTA TONDIN Julien

(57) Abstract :
A dispenser assembly (1) for dispensing a sheet (2) from a roll of sheet material (3) the roll of sheet material (3) defining a cavity (4) extending longitudinally the dispenser assembly (1) comprises: a roll holder (5) for removably holding the roll of sheet material (3) the roll of sheet material (3) being free to rotate relatively to the roll holder (5); a base (6) for supporting the roll holder (5) and for coupling the dispenser assembly (1) with an environment structure (7); and a pair of coupling elements (8) comprising a first element (9) coupled to the roll of sheet material (3) and a second element (10) integral to the roll holder (5) the first element (9) being coupled in a free to rotate and removable manner relatively to the second element (10) by magnetic coupling. The first element (9) comprises a longitudinally extending engaging portion (11) which is arranged to at least partially engage with an end portion (12) of the cavity (4) of the roll of sheet material (3) so that the first element (9) is fixedly secured to the roll of sheet material (3).

No. of Pages : 27 No. of Claims : 22

(12) PATENT APPLICATION PUBLICATION
(19) INDIA
(22) Date of filing of Application :02/03/2015

(21) Application No.1720/DELNP/2015 A
(43) Publication Date : 22/05/2015

(54) Title of the invention : ELECTRICITY STORAGE DEVICE

(51) International classification	:H01M2/12,H01M10/613,H01M10/647
(31) Priority Document No	:2012264988
(32) Priority Date	:04/12/2012
(33) Name of priority country	:Japan
(86) International Application No	:PCT/IB2013/002930
Filing Date	:27/11/2013
(87) International Publication No	:WO 2014/087234
(61) Patent of Addition to Application Number	:NA
Filing Date	:NA
(62) Divisional to Application Number	:NA
Filing Date	:NA

(71)**Name of Applicant :**
1)TOYOTA JIDOSHA KABUSHIKI KAISHA
Address of Applicant :1 Toyota cho Toyota shi Aichi ken 471 8571 Japan
(72)**Name of Inventor :**
1)NAGAMINE Koichi
2)KITAMURA Masahiko

(57) Abstract :
An electricity storage device includes: a plurality of batteries juxtaposed in a first direction each battery having on a first side a gas discharge valve that discharges a gas produced inside the battery; and a cooling path formed between the plurality of batteries that face each other in the first direction constructed to convey a coolant that cools the batteries and an intake opening for taking in the coolant on a second side that is an opposite side to the first side in a second direction orthogonal to the first direction and a discharge opening for discharging the coolant taken in on at least one of sides in a third direction orthogonal to the second direction and to the first direction.

No. of Pages : 30 No. of Claims : 10

(12) PATENT APPLICATION PUBLICATION
(19) INDIA
(22) Date of filing of Application :02/03/2015
(21) Application No.1721/DELNP/2015 A
(43) Publication Date : 22/05/2015

(54) Title of the invention : SYSTEM AND METHOD FOR TREATMENT OF WATER

(51) International classification :B01D46/04,B01D61/02,B01D65/02
(31) Priority Document No :13/603028
(32) Priority Date :04/09/2012
(33) Name of priority country :U.S.A.
(86) International Application No :PCT/IL2013/050744
Filing Date :02/09/2013
(87) International Publication No :WO 2014/037940
(61) Patent of Addition to Application Number :NA
Filing Date :NA
(62) Divisional to Application Number :NA
Filing Date :NA

(71)**Name of Applicant :**
1)ISRAEL AEROSPACE INDUSTRIES LTD.
Address of Applicant :70100 Ben Gurion Airport Israel
(72)**Name of Inventor :**
1)HOZ Benaya

(57) Abstract :
A system for water treatment the system including at least one water treatment unit including at least one membrane and having a feed water inlet at a feed side of the at least one membrane and a permeate outlet at a permeate side of the at least one membrane and an intermittent cleaning control subsystem operative to provide intermittent cleaning of the at least one membrane by causing the permeate to pass through the at least one membrane from the permeate side to the feed side thereby dislodging foulants from the at least one membrane by at least one of at least one of narrowing and closing the permeate outlet thereby causing an increase in the pressure of the permeate at the permeate side of the at least one membrane and reducing the feed pressure by at least 5% without significantly increasing the permeate pressure.

No. of Pages : 35 No. of Claims : 21

(12) PATENT APPLICATION PUBLICATION
(21) Application No.124/DEL/2012 A
(19) INDIA
(22) Date of filing of Application :13/01/2012
(43) Publication Date : 22/05/2015

(54) Title of the invention : TWO WIRE SERIAL VOLTAGE IDENTIFICATION PROTOCOL RELATED APPLICATIONS

(51) International classification :H02J
(31) Priority Document No :NA
(32) Priority Date :NA
(33) Name of priority country :NA
(86) International Application No :NA
Filing Date :NA
(87) International Publication No :NA
(61) Patent of Addition to Application Number :NA
Filing Date :NA
(62) Divisional to Application Number :NA
Filing Date :NA

(71)**Name of Applicant :**
1)INTEL CORPORATION
Address of Applicant :2200 MISSION COLLEGE BLVD., M/S:RNB4-150, SANTA CLARA, CALIFORNIA 95052, UNITED STATES OF AMERICA
(72)**Name of Inventor :**
1)IYER, JAYESH
2)STANFORD, EDWARD, R.
3)KRAIPAK, WASEEM

(57) Abstract :
In one embodiment a system comprises an integrated circuit, a plurality of voltage regulators; and a data bus coupled to the integrated circuit and the plurality of voltage regulators. In some embodiments the integrated circuit comprises logic to embed a timing signal on the data bus. Other embodiments may be described.

No. of Pages : 27 No. of Claims : 20

(12) PATENT APPLICATION PUBLICATION
(21) Application No.1716/DELNP/2015 A
(19) INDIA
(22) Date of filing of Application :02/03/2015
(43) Publication Date : 22/05/2015

(54) Title of the invention : LINKAGE SYSTEM SWITCHING DEVICE AND POWER CONTROL SYSTEM

(51) International classification :H02J3/38
(31) Priority Document No :2012174450
(32) Priority Date :06/08/2012
(33) Name of priority country :Japan
(86) International Application No :PCT/JP2013/070586
Filing Date :30/07/2013
(87) International Publication No :WO 2014/024731
(61) Patent of Addition to Application Number :NA
Filing Date :NA
(62) Divisional to Application Number :NA
Filing Date :NA

(71)**Name of Applicant :**
1)KABUSHIKI KAISHA TOSHIBA
Address of Applicant :1 1 Shibaura 1 chome Minato ku Tokyo 1058001 Japan
(72)**Name of Inventor :**
1)KASAI Chihiro
2)SHINOHARA Hirofumi

(57) Abstract :
Provided is a linkage system switching technique in which when an abnormality has occurred in a power system linked to a power generation unit the unstable power system in which the abnormality has occurred is detached while power supply from the power generation unit is continued thereby contributing to the stabilization of the power system. The present invention is connected to a power control device (50) which is connected to a power generation unit (3) and a power system (1) and linked in accordance with a reference waveform generated on the basis of information inputted from the power system (1) and comprises: an abnormality detection unit (62) which detects the abnormality of the power system (1); and a connection switching unit (63) which when the abnormality detection unit (62) has detected the abnormality of the power system (1) switches information that is a generation source of the reference waveform to information from an auxiliary system (2) which is information different from information from the power system (1).

No. of Pages : 40 No. of Claims : 10

(12) PATENT APPLICATION PUBLICATION
(21) Application No.1717/DELNP/2015 A
(19) INDIA
(22) Date of filing of Application :02/03/2015
(43) Publication Date : 22/05/2015

(54) Title of the invention : ROTARY EXPANSIBLE CHAMBER DEVICES HAVING ADJUSTABLE WORKING FLUID PORTS AND SYSTEMS INCORPORATING THE SAME

(51) International classification :F01C1/44,F04B23/00
(31) Priority Document No :61/680970
(32) Priority Date :08/08/2012
(33) Name of priority country :U.S.A.
(86) International Application No :PCT/US2013/053788
Filing Date :06/08/2013
(87) International Publication No :WO 2014/025778
(61) Patent of Addition to Application Number :NA
Filing Date :NA
(62) Divisional to Application Number :NA
Filing Date :NA

(71)**Name of Applicant :**
1)FEUSTEL Aaron
Address of Applicant :2 Winter Street Unit V 23 Claremont NH 03743 U.S.A.
(72)**Name of Inventor :**
1)FEUSTEL Aaron

(57) Abstract :
Rotary expansible chamber (REC) devices having one or more working fluid ports that are adjustable for example in size or location. In some embodiments the variable port mechanisms can be used to control any one or more of a plurality of operating parameters of a REC device independently of one or more others of the operating parameters. In some embodiments the REC devices can have a plurality of fluid volumes that change in size during rotation of the REC device and that transition to a zero volume condition during the rotation of the REC device. Systems are also provided that can include one or more REC devices. Methods for controlling various aspects of REC devices including methods of controlling one or more operating parameters are also provided.

No. of Pages : 53 No. of Claims : 25

(12) PATENT APPLICATION PUBLICATION
(19) INDIA
(22) Date of filing of Application :02/03/2015
(21) Application No.1718/DELNP/2015 A
(43) Publication Date : 22/05/2015

(54) Title of the invention : USER TERMINAL APPARATUS AND METHOD FOR COMMUNICATION USING THE SAME

(51) International classification	:H04W88/02,H04W4/16,G06F3/048
(31) Priority Document No	:1020120085931
(32) Priority Date	:06/08/2012
(33) Name of priority country	:Republic of Korea
(86) International Application No	:PCT/KR2013/007079
Filing Date	:06/08/2013
(87) International Publication No	:WO 2014/025189
(61) Patent of Addition to Application Number	:NA
Filing Date	:NA
(62) Divisional to Application Number	:NA
Filing Date	:NA

(71)**Name of Applicant :**
1)SAMSUNG ELECTRONICS CO. LTD.
Address of Applicant :129 Samsung ro Yeongtong gu Suwon si Gyeonggi do 443 742 Republic of Korea
(72)**Name of Inventor :**
1)CHO Hyung rae
2)KWEON Ji hyeon
3)LEE Kang min

(57) Abstract :
A user terminal apparatus and a communication method using the same are provided. A user terminal apparatus includes an inputter configured to receive a request for an access to a second user terminal apparatus; a communicator configured to receive service information including at least one communication service provided in the second user terminal apparatus; a displayer configured to display the service information; and a controller configured to when at least one of the service information is selected access the second user terminal apparatus through a communication service corresponding to the selected service information.

No. of Pages : 32 No. of Claims : 15

(12) PATENT APPLICATION PUBLICATION
(19) INDIA
(22) Date of filing of Application :13/03/2012
(21) Application No.2183/DELNP/2012 A
(43) Publication Date : 22/05/2015

(54) Title of the invention : METHODS AND DEVICES FOR CLASSIFYING OBJECTS

(51) International classification :G06T 7/40
(31) Priority Document No :61/276,796
(32) Priority Date :16/09/2009
(33) Name of priority country :U.S.A.
(86) International Application No :PCT/US2010/002441
Filing Date :02/09/2010
(87) International Publication No :WO 2011/034563
(61) Patent of Addition to Application Number :NA
Filing Date :NA
(62) Divisional to Application Number :NA
Filing Date :NA

(71)**Name of Applicant :**
1)NESTEC S.A.
Address of Applicant :AVENUE NESTLE 55, CH-1800 VEVEY, SWITZERLAND
(72)**Name of Inventor :**
1)WOERZ, STEPHEN
2)WEBER, FRANK
3)MALLARE, ANATONIO

(57) Abstract :
The invention provides methods for classifying an object by (a) at least partially coating at least one surface of the object with at least one barcode; (b) scanning the barcode with at least one corresponding barcode detector that is detectably compatible with a barcode of the type coated on the object; (c) determining whether the barcode is read by the barcode detector; and (d) classifying the object on the basis of at least one barcode not being read by the corresponding barcode detector.

No. of Pages : 23 No. of Claims : 54

(12) PATENT APPLICATION PUBLICATION
(19) INDIA
(22) Date of filing of Application :08/01/2014
(21) Application No.145/DELNP/2014 A
(43) Publication Date : 22/05/2015

(54) Title of the invention : POLYMORPHS OF (S) PYRROLIDINE 1 2 DICARBOXYLIC ACID 2 AMIDE 1 ({4 METHYL 5 [2 (2 2 2 TRIFLUORO 1 1 DIMETHYL ETHYL) PYRIDIN 4 YL] THIAZOL 2 YL} AMIDE

(51) International classification :C07D417/14,A61K31/4439,A61P35/00
(31) Priority Document No :61/499222
(32) Priority Date :21/06/2011
(33) Name of priority country :U.S.A.
(86) International Application No :PCT/EP2012/061756
Filing Date :19/06/2012
(87) International Publication No :WO 2012/175522
(61) Patent of Addition to Application Number :NA
Filing Date :NA
(62) Divisional to Application Number :NA
Filing Date :NA

(71)**Name of Applicant :**
1)NOVARTIS AG
Address of Applicant :Lichtstrasse 35 CH 4056 Basel Switzerland
(72)**Name of Inventor :**
1)GALLOU Isabelle Sylvie
2)GAUER Cornelius
3)STOWASSER Frank

(57) Abstract :
The present invention relates to specific solid forms of (S) pyrrolidine 1 2 dicarboxylic acid 2 amide l (4 methyl 5 [2 (2 2 2 trifluoro 1 1 dimethyl ethyl) pyridin 4 yl] thiazol 2 yl) amide and its solvates. The present invention further relates to processes for preparing said solid forms pharmaceutical compositions comprising said solid forms and methods of using said solid forms and pharmaceutical compositions to treat disease.

No. of Pages : 46 No. of Claims : 19

(12) PATENT APPLICATION PUBLICATION
(21) Application No.15/DELNP/2015 A
(19) INDIA
(22) Date of filing of Application :01/01/2015
(43) Publication Date : 22/05/2015

(54) Title of the invention : SECURE SESSION FOR A GROUP OF NETWORK NODES

(51) International classification :H04L29/06,H04L9/08,H04L12/18
(31) Priority Document No :NA
(32) Priority Date :NA
(33) Name of priority country :NA
(86) International Application No :PCT/SE2012/050850
Filing Date :27/07/2012
(87) International Publication No :WO 2014/017959
(61) Patent of Addition to Application Number :NA
Filing Date :NA
(62) Divisional to Application Number :NA
Filing Date :NA

(71)**Name of Applicant :**
1)TELEFONAKTIEBOLAGET L M ERICSSON (publ)
Address of Applicant :Torshamnsgatan 21 23 S 164 83 Stockholm Sweden
(72)**Name of Inventor :**
1)GEHRMANN Christian
2)OHLSSON Oscar
3)SEITZ Ludwig

(57) Abstract :
Methods(500)of a network node (111) for creating and joining secure sessions for members (111,114) of a group of network nodes are provided. The methods comprise receiving an identity certificate and an assertion for the network node as well as a secret group key for the group. The method for creating a session further comprises creating (501) a session identifier and a secret session key for the session and sending (502) an encrypted and authenticated broadcast message comprising the session identifier. The method for joining a session further comprises sending an encrypted and authenticated discovery message comprising the identity certificate and the assertion and receiving an encrypted and authenticated discovery response message from another network node which is a member of the group. The disclosed combined symmetric key and public key scheme is based on the availability of three credentials at each node i.e. the identity certificate the assertion and the secret group key which are received from a trusted entity. Further a computer program a computer program product and a network node are provided.

No. of Pages : 30 No. of Claims : 21

(12) PATENT APPLICATION PUBLICATION
(21) Application No.21/DELNP/2015 A
(19) INDIA
(22) Date of filing of Application :02/01/2015
(43) Publication Date : 22/05/2015

(54) Title of the invention : REVERSING DEVICE FOR A FILM WEB BY MEANS OF AN EXPANDER ROLLER

(51) International classification :B65H23/025,B65H23/32
(31) Priority Document No :10 2012 106 389.3
(32) Priority Date :16/07/2012
(33) Name of priority country :Germany
(86) International Application No :PCT/EP2013/063570
Filing Date :27/06/2013
(87) International Publication No :WO 2014/012765
(61) Patent of Addition to Application Number :NA
Filing Date :NA
(62) Divisional to Application Number :NA
Filing Date :NA

(71)**Name of Applicant :**
1)WINDM–LLER & H–LSCHER KG
Address of Applicant :M¼nsterstr. 50 49525 Lengerich Germany
(72)**Name of Inventor :**
1)BUSSMANN Markus
2)HOFFMANN Frank
3)KIRCHHOFF Tim

(57) Abstract :
The invention relates to a reversing device (10) for a film web (100) which has a take off device (20) at least one turning device (30) and at least one deflecting roller (40) wherein the film web (100) can be guided by the take off device (20) via the at least one turning device (30) and the at least one deflecting roller (40) to a winding device (300) and the axes (AA,WA, UA) of the take off device (20) the at least one turning device (30) and the at least one deflecting roller (40) are adjustable in angle relative to one another characterised in that the at least one deflecting roller (40) is formed as an expander roller having an expanding capacity which increases towards the end faces (42,44) of the deflecting roller (40).

No. of Pages : 23 No. of Claims : 12

(12) PATENT APPLICATION PUBLICATION
(19) INDIA
(22) Date of filing of Application :14/03/2012
(21) Application No.2246/DELNP/2012 A
(43) Publication Date : 22/05/2015

(54) Title of the invention : AN ACIDIFIED MILK BEVERAGE POWDER AND METHOD FOR PRODUCING THE SAME

(51) International classification :A23C 9/154
(31) Priority Document No :200910177791.4
(32) Priority Date :22/09/2009
(33) Name of priority country :China
(86) International Application No :PCT/EP2010/063940
Filing Date :22/09/2010
(87) International Publication No :WO 2011/036163
(61) Patent of Addition to Application Number :NA
Filing Date :NA
(62) Divisional to Application Number :NA
Filing Date :NA

(71)**Name of Applicant :**
1)NESTEC S.A.
Address of Applicant :AVENUE NESTLE 55, CH-1800 VEVEY, SWITZERLAND
(72)**Name of Inventor :**
1)JUGA, BIRKE
2)LIAN HWEE PENG, REBECCA

(57) Abstract :
The present invention relates to an acidified milk beverage powder and method for producing such an acidified milk beverage powder. More specifically, the present invention provides a powdered composition which can be added to water with minimal mixing to produce an acidified fruit beverage containing milk and having a smooth texture. Said powder comprising: i) 20-40 wt% fruit juice powder; ii) 50-70 wt% granular sugar; iii) 1-2 wt% organic acid granules; iv) 4-10 wt% milk powder; and v) 3-4 wt% carboxymethylcellulose powder composed of particles, wherein said particles have a diameter of 0.5 mm or less, preferably of 0.1 mm or less. The present invention also provides a process for producing said powder for the preparation of an acidified milk beverage, comprising steps of : dry blending granular sugar with carboxymethylcellulose powder, and mixing a milk powder, a fruit juice powder and granular organic acid into the blend.

No. of Pages : 15 No. of Claims : 14

(12) PATENT APPLICATION PUBLICATION
(21) Application No.130/DEL/2012 A
(19) INDIA
(22) Date of filing of Application :13/01/2012
(43) Publication Date : 22/05/2015

(54) Title of the invention : VOICE AND DATA COMMUNICATION OVER WIRELESS NETWORKS

(51) International classification :H04N
(31) Priority Document No :NA
(32) Priority Date :NA
(33) Name of priority country :NA
(86) International Application No :NA
Filing Date :NA
(87) International Publication No : NA
(61) Patent of Addition to Application Number :NA
Filing Date :NA
(62) Divisional to Application Number :NA
Filing Date :NA

(71)**Name of Applicant :**
1)ALCATEL-LUCENT
Address of Applicant :3 avenue Octave Grard 75007 Paris France
(72)**Name of Inventor :**
1)JOHN Rijin

(57) Abstract :
The present subject matter discloses systems and methods for voice and data communication in wireless networks. In one implementation the method comprises obtaining at least one network service parameter for each of the plurality of service providers retrieving at one least network selection rule and computing a priority index for each of the plurality of service providers based in part on the at least one network service parameter and the at least one network selection rule. The method further comprises allocating a category of services to one or more of the plurality of service providers based on the priority index and obtaining the services from at least one of the plurality of service providers based on the allocation.

No. of Pages : 27 No. of Claims : 15

(12) PATENT APPLICATION PUBLICATION
(21) Application No.130/DELNP/2014 A
(19) INDIA
(22) Date of filing of Application :07/01/2014
(43) Publication Date : 22/05/2015

(54) Title of the invention : COMMUNICATION SYSTEM, COMMUNICATION APPARATUS, COMMUNICATION METHOD AND COMMUNICATION PROGRAM FOR REALIZING THEREOF

(51) International classification	:H04L
(31) Priority Document No	:P2003-290822
(32) Priority Date	:08/08/2003
(33) Name of priority country	:Japan
(86) International Application No	:PCT/JP2004/011304
Filing Date	:30/07/2004
(87) International Publication No	: NA
(61) Patent of Addition to Application Number	:NA
Filing Date	:NA
(62) Divisional to Application Number	:5771/DELNP/2005
Filed on	:12/12/2005

(71)**Name of Applicant :**
1)KEIKO OGAWA
Address of Applicant :Santoa Nishinippori, 3-25-7-902, Higashiogu, Arakawa-ku, Tokyo, 116-0012, Japan,
(72)**Name of Inventor :**
1)HIROTSUGU OZAKI
2)KEIKO OGAWA

(57) Abstract :
A communication system in which first and second communication apparatuses (4a,4b) equipped with arrangement means for arranging encryption and decryption logic used for a communication system which carries out a communication by encrypting a protocol positioned in a transport layer and a third communication apparatus (4c) not equipped with arrangement means for arranging said encryption and decryption logic are connected to a network respectively, wherein said first and second communication apparatuses are equipped with protocol encryption means for encrypting and transmitting at least a payload of said protocol in a packet of an information unit to be transmitted and received according to an encryption logic arranged by said arrangement means and both of encryption protocol processing means consisting of protocol decryption means for decrypting said encrypted protocol payload to be received according to a decryption logic arranged by said arrangement means and ordinary protocol processing means without being accompanied by said encryption and decryption logic, said third communication apparatus is equipped with only an ordinary protocol processing means without arrangement means for arranging said encryption and decryption logic, when said first communication apparatus communicates with said second communication apparatus, said encryption protocol means is selected by the arrangement means of said encryption and decryption logic so as to communicate by said encryption protocol means and at the same time, and when said first communication apparatus communicates with said third communication apparatus, said ordinary protocol processing means without being accompanied by said encryption and decryption is selected by the arrangement means of said encryption and decryption logic so as to carry out a communicate with said third communication apparatus by said ordinary protocol processing means.

No. of Pages : 130 No. of Claims : 21

(12) PATENT APPLICATION PUBLICATION
(19) INDIA
(22) Date of filing of Application :08/01/2014
(21) Application No.144/DELNP/2014 A
(43) Publication Date : 22/05/2015

(54) Title of the invention : NEW PROCESSES FOR PREPARING 4 SUBSTITUTED IMIDAZOLES

(51) International classification :C07D233/64
(31) Priority Document No :61/510538
(32) Priority Date :22/07/2011
(33) Name of priority country :U.S.A.
(86) International Application No :PCT/GB2012/051746
Filing Date :20/07/2012
(87) International Publication No :WO 2013/014428
(61) Patent of Addition to Application Number :NA
Filing Date :NA
(62) Divisional to Application Number :NA
Filing Date :NA

(71)**Name of Applicant :**
1)CAMBREX KARLSKOGA AB
Address of Applicant :SE 691 85 Karlskoga Sweden
(72)**Name of Inventor :**
1)EKLUND Lars
2)HANSSON Lars
3)LUNDHOLM Tommy
4)HOLMBERG Pr
5)EEK Margus

(57) Abstract :
There is provided a novel process for the preparation of a compound of formula (I) (Formula (I)). There is also provided novel processes to intermediates of the compound of formula (I) as well as novel intermediates themselves.

No. of Pages : 53 No. of Claims : 13

(12) PATENT APPLICATION PUBLICATION
(19) INDIA
(22) Date of filing of Application :19/03/2012
(21) Application No.2354/DELNP/2012 A
(43) Publication Date : 22/05/2015

(54) Title of the invention : APPLIANCE FOR PREPARING A CHOCOLATE-BASED BEVERAGE

(51) International classification :A47J 31/18
(31) Priority Document No :09171608.4
(32) Priority Date :29/09/2009
(33) Name of priority country :EPO
(86) International Application No :PCT/EP2010/064414
Filing Date :29/09/2010
(87) International Publication No :WO 2011/039222
(61) Patent of Addition to Application Number :NA
Filing Date :NA
(62) Divisional to Application Number :NA
Filing Date :NA

(71)**Name of Applicant :**
1)NESTEC S.A.
Address of Applicant :AVENUE NESTLE 55, CH-1800 VEVEY, SWITZERLAND
(72)**Name of Inventor :**
1)AGON, FABIEN LUDOVIC
2)PERRIN, ALEXA
3)PERENTES, ALEXANDRE

(57) Abstract :
A process for preparing a beverage comprises: providing a liquid carrier; supplying a flavouring ingredient to the liquid carrier; optionally heating the liquid carrier; and agitating the liquid carrier to promote dissolution and/or dispersion of the flavouring ingredient therein. The flavouring ingredient is supplied in the form of a self-sustaining body (2) to the liquid carrier, the self-sustaining body (2) having at least one surface (3) from which the flavouring ingredient is dissolved and/or dispersed into the liquid carrier. The liquid carrier is agitated in a controlled manner to circulate on this surface so as to achieve a controlled dissolution and/or dispersion of the flavouring ingredient into the liquid carrier.

No. of Pages : 22 No. of Claims : 15

(12) PATENT APPLICATION PUBLICATION
(19) INDIA
(22) Date of filing of Application :07/01/2014
(21) Application No.123/DELNP/2014 A
(43) Publication Date : 22/05/2015

(54) Title of the invention : HETEROCYCLIC SULFONAMIDE DERIVATIVES

(51) International classification :C07D307/82,A61K31/343,A61P35/00
(31) Priority Document No :1634/DEL/11
(32) Priority Date :09/06/2011
(33) Name of priority country :India
(86) International Application No :PCT/IB2012/052860
Filing Date :06/06/2012
(87) International Publication No :WO 2012/168884
(61) Patent of Addition to Application Number :NA
Filing Date :NA
(62) Divisional to Application Number :NA
Filing Date :NA

(71)**Name of Applicant :**
1)NOVARTIS AG
Address of Applicant :Lichtstrasse 35 CH 4056 Basel Switzerland
(72)**Name of Inventor :**
1)PODDUTOORI Ramulu
2)WANG Can
3)ZHAO Xianglin

(57) Abstract :
The present invention relates to compounds (I) and pharmaceutically acceptable salts thereof. The compounds have been demonstrated as inhibitors of MEK and therefore may be useful in the treatment of hyperproliferative diseases like cancer and inflammation.

No. of Pages : 51 No. of Claims : 16

(12) PATENT APPLICATION PUBLICATION
(19) INDIA
(22) Date of filing of Application :08/01/2014
(21) Application No.156/DELNP/2014 A
(43) Publication Date : 22/05/2015

(54) Title of the invention : ACTIVE COMPOUND COMBINATIONS COMPRISING SPECIFIC TETRAMIC ACID DERIVATIVES

(51) International classification	:A01N47/06,A01N57/20,A01P5/00
(31) Priority Document No	:61/521827
(32) Priority Date	:10/08/2011
(33) Name of priority country	:U.S.A.
(86) International Application No	:PCT/EP2012/065469
Filing Date	:07/08/2012
(87) International Publication No	:WO 2013/020985
(61) Patent of Addition to Application Number	:NA
Filing Date	:NA
(62) Divisional to Application Number	:NA
Filing Date	:NA

(71)**Name of Applicant :**
1)BAYER INTELLECTUAL PROPERTY GMBH
Address of Applicant :Alfred Nobel Str. 10 40789 Monheim Germany
(72)**Name of Inventor :**
1)DEALL Michael
2)FISCHER Reiner
3)HACKER Erwin
4)HUNGENBERG Heike
5)BELL John
6)STEFFENS Robert

(57) Abstract :
The invention provides combinations of insecticides/acaricides and herbicides comprising an effective amount of components (A) and (B) where component (A) is one or more of the tetramic acid derivatives listed in the description and (B) one or more herbicides from the group of the herbicides likewise listed in the description where the combninations may optionally additionally comprise crop plant compatibility increasing substances (safeners). The invention also relates to the use of the combinations for controlling animal pests and unwanted vegetation and to the corresponding methods.

No. of Pages : 77 No. of Claims : 12

(12) PATENT APPLICATION PUBLICATION
(21) Application No.1705/DELNP/2015 A
(19) INDIA
(22) Date of filing of Application :02/03/2015
(43) Publication Date : 22/05/2015

(54) Title of the invention : INDIRECT HEATING TYPE ROTARY DRIER

(51) International classification :F26B17/32
(31) Priority Document No :2012199342
(32) Priority Date :11/09/2012
(33) Name of priority country :Japan
(86) International Application No :PCT/JP2013/067489
Filing Date :26/06/2013
(87) International Publication No :WO 2014/041869
(61) Patent of Addition to Application Number :NA
Filing Date :NA
(62) Divisional to Application Number :NA
Filing Date :NA

(71)**Name of Applicant :**
1)TSUKISHIMA KIKAI CO. LTD.
Address of Applicant :5 1 Harumi 3 chome Chuo ku Tokyo 1040053 Japan
(72)**Name of Inventor :**
1)KATAOKA Masaki
2)NOGUCHI Takayuki

(57) Abstract :
This indirect heating type rotary drier (A) is provided with: a main drier unit (11) for rotating and drying a work material (W) supplied from one end of the main drier unit (11) while the work material (W) is transported to the other end; a plurality of heating tubes (18) arranged in a row on the inner peripheral part of the main drier unit (11) the heating tubes (18) extending in the direction of the center axial line (O) of the main drier unit (11); and a plurality of tube supports (22) for supporting the plurality of heating tubes (18). A plurality of first tube supports (23) which constitute part of the plurality of tube supports (22) and are positioned at the other end of the main drier unit (11) are arranged so that the first tube supports (23) closer to the other end of the main drier unit (11) are oriented further in the direction of rotation (T) of the main drier unit (11).

No. of Pages : 28 No. of Claims : 5

(12) PATENT APPLICATION PUBLICATION
(21) Application No.1706/DELNP/2015 A
(19) INDIA
(22) Date of filing of Application :02/03/2015
(43) Publication Date : 22/05/2015

(54) Title of the invention : ANTICHOLINERGIC NEUROPROTECTIVE COMPOSITION AND METHODS

(51) International classification :A61K31/00
(31) Priority Document No :61/696978
(32) Priority Date :05/09/2012
(33) Name of priority country :U.S.A.
(86) International Application No :PCT/US2013/058172
Filing Date :05/09/2013
(87) International Publication No :WO 2014/039627
(61) Patent of Addition to Application Number :NA
Filing Date :NA
(62) Divisional to Application Number :NA
Filing Date :NA

(71)**Name of Applicant :**
1)CHASE PHARMACEUTICALS CORPORATION
Address of Applicant :1825 K Street NW Suite 520 Washington District of Columbia 20006 U.S.A.
(72)**Name of Inventor :**
1)CLARENCE SMITH Kathleen E.
2)CHASE Thomas N.

(57) Abstract :
The present invention relates to a pharmaceutical composition comprising propiverine trospium or glycopyrrolate; and a non anticholinergic antiemetic agent. It is also related to a pharmaceutical composition comprising a high dose of solifenacin or a pharmaceutically acceptable salts thereof; and a non anticholinergic antiemetic agent. Pharmaceutical compositions containing high dose of nsPAChA for use for increasing the AChEI blood concentrations and for combating neurodegeneration are also described. The invention also relates to a method for inducing neuroprotection and combating neurodegeneration in a patient suffering from Alzheimer type dementia as well as to a method for increasing the blood levels of an acetyl choline esterase inhibitor (AChEI) in a human subject treated with an AChEI dose.

No. of Pages : 142 No. of Claims : 1

(12) PATENT APPLICATION PUBLICATION
(19) INDIA
(22) Date of filing of Application :02/01/2015
(21) Application No.27/DELNP/2015 A
(43) Publication Date : 22/05/2015

(54) Title of the invention : ISOLATOR DECOUPLER

(51) International classification :F16D7/02,F16D41/20,F16H55/36
(31) Priority Document No :13/541216
(32) Priority Date :03/07/2012
(33) Name of priority country :U.S.A.
(86) International Application No :PCT/US2013/037515
Filing Date :22/04/2013
(87) International Publication No :WO 2014/007906
(61) Patent of Addition to Application Number :NA
Filing Date :NA
(62) Divisional to Application Number :NA
Filing Date :NA

(71)**Name of Applicant :**
1)THE GATES CORPORATION (A DELAWARE CORPORATION)
Address of Applicant :1551 Wewatta Street Denver CO 80202 U.S.A.
(72)**Name of Inventor :**
1)SCHNEIDER Dean
2)SERKH Alexander
3)WARD Peter

(57) Abstract :
An isolator decoupler comprising a pulley a shaft the pulley journalled to the shaft on a low friction bushing a spring carrier disposed within the pulley a torsion spring coupled between the pulley and the spring carrier a wrap spring one way clutch wrapped about the shaft and having a frictional engagement therewith the wrap spring one way clutch coupled to the spring carrier the wrap spring one way clutch is disposed radially inward of the torsion spring and the pulley temporarily engagable with an end of the wrap spring one way clutch in an unwinding direction whereby a temporary contact between the wrap spring one way clutch end and the pulley will temporarily diminish the frictional engagement of the wrap spring one way clutch with the shaft.

No. of Pages : 18 No. of Claims : 7

(12) PATENT APPLICATION PUBLICATION
(19) INDIA
(22) Date of filing of Application :13/01/2012
(21) Application No.128/DEL/2012 A
(43) Publication Date : 22/05/2015

(54) Title of the invention : MILL LINER ASSEMBLY

(51) International classification :B21J
(31) Priority Document No :61/432,406
(32) Priority Date :13/01/2011
(33) Name of priority country :U.S.A.
(86) International Application No :NA
Filing Date :NA
(87) International Publication No :NA
(61) Patent of Addition to Application Number :NA
Filing Date :NA
(62) Divisional to Application Number :NA
Filing Date :NA

(71)**Name of Applicant :**
1)POLYCORP LTD.
Address of Applicant :33 YORK STREET WEST, ELORA, ONTARIO N0B 1S0, CANADA
(72)**Name of Inventor :**
1)ROBERT MEPHAM
2)DAVID J. PAGE
3)PRAMOD KUMAR

(57) Abstract :
A mill liner assembly for mounting on an inner diameter of a shell of a grinding mill. The mill liner assembly includes one or more shell plates for engagement with the shell, each of the shell plates having a cooperating portion thereof, and one or more lifter bars, each of the lifter bars having a mounting portion thereof, the mounting portion being receivable on the cooperating portion. The mill liner assembly also includes one or more layers having one or more substantially non-resilient materials and a substantially non-sticking surface. The layer is at least partially positioned on at least a first selected one of the cooperating portion and the mounting portion, to position the non-sticking surface thereof for engagement with a second selected one of the cooperating portion and the mounting portion, to impede adhesion of the shell plate and the lifter bar to each other.

No. of Pages : 51 No. of Claims : 18

(12) PATENT APPLICATION PUBLICATION
(19) INDIA
(22) Date of filing of Application :07/01/2014
(21) Application No.128/DELNP/2014 A
(43) Publication Date : 22/05/2015

(54) Title of the invention : AN APPARATUS AND METHOD OF PROCESSING MICROORGANISMS

(51) International classification :C12N1/06,C12M1/33
(31) Priority Document No :1110575.6
(32) Priority Date :22/06/2011
(33) Name of priority country :U.K.
(86) International Application No :PCT/GB2012/051476
Filing Date :22/06/2012
(87) International Publication No :WO 2012/175999
(61) Patent of Addition to Application Number :NA
Filing Date :NA
(62) Divisional to Application Number :NA
Filing Date :NA

(71)**Name of Applicant :**
1)PURSUIT MARINE DRIVE LIMITED
Address of Applicant :Suite 4 The Science Village Chesterford Research Park Little Chesterford CB10 1XL U.K.
(72)**Name of Inventor :**
1)FENTON Marcus Brian Mayhall
2)KOROLEVA Olga
3)GOTHARD Michelle Gina Elizabeth
4)DRAKE Christopher

(57) Abstract :
A method and apparatus for processing microorganisms is provided. The method comprises mixing microorganisms with a working fluid to form an working fluid slurry and injecting a transport fluid through a transport fluid nozzle into the working fluid slurry in order to disrupt the cellular structure of the microorganisms.

No. of Pages : 40 No. of Claims : 49

(12) PATENT APPLICATION PUBLICATION
(19) INDIA
(22) Date of filing of Application :07/01/2014
(21) Application No.132/DELNP/2014 A
(43) Publication Date : 22/05/2015

(54) Title of the invention : VIEWING FOCUS ORIENTED IMAGE PROCESSING

(51) International classification :G06T1/00,A61B3/113,G06T3/40
(31) Priority Document No :13/178127
(32) Priority Date :07/07/2011
(33) Name of priority country :U.S.A.
(86) International Application No :PCT/CA2012/000626
Filing Date :29/06/2012
(87) International Publication No :WO 2013/003942
(61) Patent of Addition to Application Number :NA
Filing Date :NA
(62) Divisional to Application Number :NA
Filing Date :NA

(71)**Name of Applicant :**
1)ATI TECHNOLOGIES ULC
Address of Applicant :One Commerce Valley Drive East Markham Ontario L3T 7X6 Canada
(72)**Name of Inventor :**
1)GU Hao Ran

(57) Abstract :
A method and a processor for implementing the method are disclosed for processing of an image. A first algorithm is selected to be used for processing information presenting an area of interest in the image. A second algorithm is selected to be used for processing information representing an area of the image that is not in the area of interest. The first and second algorithms are applied to their respective portions of the information representing the image.

No. of Pages : 20 No. of Claims : 28

(12) PATENT APPLICATION PUBLICATION
(19) INDIA
(22) Date of filing of Application :08/01/2014
(21) Application No.155/DELNP/2014 A
(43) Publication Date : 22/05/2015

(54) Title of the invention : SOLAR CELL SEALING MATERIAL AND LAMINATED GLASS INTERLAYER

(51) International classification :H01L31/042,C03C27/12
(31) Priority Document No :2011143466
(32) Priority Date :28/06/2011
(33) Name of priority country :Japan
(86) International Application No :PCT/JP2012/066447
Filing Date :27/06/2012
(87) International Publication No :WO 2013/002292
(61) Patent of Addition to Application Number :NA
Filing Date :NA
(62) Divisional to Application Number :NA
Filing Date :NA

(71)**Name of Applicant :**
1)KURARAY CO. LTD.
Address of Applicant :1621 Sakazu Kurashiki shi Okayama 7100801 Japan
(72)**Name of Inventor :**
1)MUGURUMA Shinichi
2)MUKOSE Takashi

(57) Abstract :
The purpose of the present invention is to provide a solar cell sealing material which has excellent corrosion resistance and enables the life of a solar cell module to be increased. The purpose of the present invention is also to provide a laminated glass interlayer which has excellent corrosion resistance and enables long term durability of laminated glass to be achieved. The present invention pertains to a solar cell sealing material or a laminated glass interlayer that contains not less than 40 mass% of polyvinyl acetal has a chlorine content of not more than 25 ppm and has a plasticizer content of not more than 10 parts by mass with respect to 100 parts by mass of polyvinyl acetal.

No. of Pages : 59 No. of Claims : 10

(12) PATENT APPLICATION PUBLICATION
(19) INDIA
(22) Date of filing of Application :26/03/2012
(21) Application No.2624/DELNP/2012 A
(43) Publication Date : 22/05/2015

(54) Title of the invention : METHODS FOR PREVENTING OR TREATING SARCOPENIA AND MUSCLE ATROPHY IN ANIMALS

(51) International classification :A61K 31/785
(31) Priority Document No :61/278,633
(32) Priority Date :09/10/2009
(33) Name of priority country :U.S.A.
(86) International Application No :PCT/US2010/002722
Filing Date :08/10/2010
(87) International Publication No :WO 2011/043827
(61) Patent of Addition to Application Number :NA
Filing Date :NA
(62) Divisional to Application Number :NA
Filing Date :NA

(71)**Name of Applicant :**
1)NESTEC S.A.
Address of Applicant :AVENUE NESTLE, CH-1800 VEVEY, SWITZERLAND
(72)**Name of Inventor :**
1)PAN, YUANLONG
2)KOCHHAR, SUNIL
3)REZZI, SERGE, ANDRE, DOMINIQUE
4)MARTIN, FRANCOISE-PIERRE
5)PERE-TREPAT, EMMA
6)COLLINO, SEBASTIANO
7)ARCE VERA, FRANCIA

(57) Abstract :
The invention provides methods for one or more of preventing or treating sarcopenia and muscle atrophy in animals. The methods comprise administering isoflavones to the animals, preferably in amounts of from about 0.001 to about 10 g/kg/day.

No. of Pages : 16 No. of Claims : 29

(12) PATENT APPLICATION PUBLICATION
(19) INDIA
(22) Date of filing of Application :02/01/2015
(21) Application No.28/DELNP/2015 A
(43) Publication Date : 22/05/2015

(54) Title of the invention : PUSH BUTTON SWITCH HAVING A CURVED DEFORMABLE CONTACT ELEMENT

(51) International classification :H01H13/48,H01H13/64,H01H13/78
(31) Priority Document No :12176987.1
(32) Priority Date :18/07/2012
(33) Name of priority country :EPO
(86) International Application No :PCT/DK2013/050243
Filing Date :18/07/2013
(87) International Publication No :WO 2014/012557
(61) Patent of Addition to Application Number :NA
Filing Date :NA
(62) Divisional to Application Number :NA
Filing Date :NA

(71)**Name of Applicant :**
1)MEC A/S
Address of Applicant :P.O. Box 26 Industriparken 23 DK 2750 Ballerup Denmark
(72)**Name of Inventor :**
1)DROMPH Flemming
2)LARSEN Dan

(57) Abstract :
The present invention relates to a push button switch 5 comprising a curved deformable contact element 4. The push button switch 5 comprises at least one first terminal point 1 at least one second terminal point 2 and at least one third terminal point 3. The deformable contact element 4 is switched between a first and a second state. In the first state the deformable contact element 4 connects the at least one first terminal point 1 with the at least one second terminal point 2 whereas there is neither contact between the at least one third terminal point 3 and the at least one first terminal point 1 nor between the at least one third terminal point 3 and the at least one second terminal point 2. In the second state the deformable contact element 4 connects the at least one first terminal point with the at least one third terminal point 3 whereas there is neither contact between the at least one second terminal point 2 and the at least one first terminal point 1 nor between the at least one second terminal point 2 and the at 1 least one third terminal point 3. This implies that the push button switch 5 is designed to be both normally closed and normally open.

No. of Pages : 23 No. of Claims : 11

(12) PATENT APPLICATION PUBLICATION
(21) Application No.16/DELNP/2015 A
(19) INDIA
(22) Date of filing of Application :01/01/2015
(43) Publication Date : 22/05/2015

(54) Title of the invention : MEMS OPTICAL SENSOR

(51) International classification :G01L11/02,G01L1/24
(31) Priority Document No :12171002.4
(32) Priority Date :06/06/2012
(33) Name of priority country :EPO
(86) International Application No :PCT/EP2013/061701
Filing Date :06/06/2013
(87) International Publication No :WO 2013/182643
(61) Patent of Addition to Application Number :NA
Filing Date :NA
(62) Divisional to Application Number :NA
Filing Date :NA

(71)**Name of Applicant :**
1)TECHNICAL UNIVERSITY OF DENMARK
Address of Applicant :Bygning 101A Anker Engelundsvej 1 DK 2800 Kgs. Lyngby Denmark
(72)**Name of Inventor :**
1)RECK Kasper
2)˜STERGAARD Christian
3)HANSEN Ole
4)THOMSEN Erik Vilain

(57) Abstract :
The present invention relates to an all optical sensor utilizing effective index modulation of a waveguide and detection of a wavelength shift of reflected light and a force sensing system accommodating said optical sensor. One embodiment of the invention relates to a sensor system comprising at least one multimode light source one or more optical sensors comprising a multimode sensor optical waveguide accommodating a distributed Bragg reflector at least one transmitting optical waveguide for guiding light from said at least one light source to said one or more multimode sensor optical waveguides a detector for measuring light reflected from said Bragg reflector in said one or more multimode sensor optical waveguides and a data processor adapted for analyzing variations in the Bragg wavelength of at least one higher order mode of the reflected light.

No. of Pages : 51 No. of Claims : 32

(12) PATENT APPLICATION PUBLICATION
(21) Application No.1700/DELNP/2015 A
(19) INDIA
(22) Date of filing of Application :02/03/2015
(43) Publication Date : 22/05/2015

(54) Title of the invention : COMPLEX CHROMOSOME ENGINEERING FOR PRODUCTION OF HUMAN ANTIBODIES IN TRANSGENIC ANIMALS

(51) International classification :C07K16/00,C12N15/85,C12N15/87
(31) Priority Document No :61/679288
(32) Priority Date :03/08/2012
(33) Name of priority country :U.S.A.
(86) International Application No :PCT/US2013/053618
Filing Date :05/08/2013
(87) International Publication No :WO 2014/022853
(61) Patent of Addition to Application Number :NA
Filing Date :NA
(62) Divisional to Application Number :NA
Filing Date :NA

(71)**Name of Applicant :**
1)SAB LLC
Address of Applicant :2301 E 60th Street North Sioux Falls SD 57104 U.S.A.
(72)**Name of Inventor :**
1)KUROIWA Yoshimi
2)MATSUSHITA Hiroaki
3)SANO Akiko

(57) Abstract :
The invention relates to large scale production of human antibodies by transgenic animals with high production of fully human IgG up to >10 g/L in sera with human IgGl subclass dominancy. This invention also supports a feasibility of complex chromosome engineering for complicated genetic studies in non murine mammalian species.

No. of Pages : 242 No. of Claims : 43

(12) PATENT APPLICATION PUBLICATION
(21) Application No.1702/DELNP/2015 A
(19) INDIA
(22) Date of filing of Application :02/03/2015
(43) Publication Date : 22/05/2015

(54) Title of the invention : SYSTEMS AND METHODS FOR BLOCKING EXCESSIVE TRANSMITTER MESSAGE SIGNALING

(51) International classification :H04W76/04
(31) Priority Document No :61/678791
(32) Priority Date :02/08/2012
(33) Name of priority country :U.S.A.
(86) International Application No :PCT/IB2013/056331
Filing Date :01/08/2013
(87) International Publication No :WO 2014/020569
(61) Patent of Addition to Application Number :NA
Filing Date :NA
(62) Divisional to Application Number :NA
Filing Date :NA

(71)**Name of Applicant :**
1)TELEFONAKTIEBOLAGET L M ERICSSON (PUBL)
Address of Applicant :S 164 83 Stockholm Sweden
(72)**Name of Inventor :**
1)YAVUZ Emre
2)W„NSTEDT Stefan
3)WIEMANN Henning

(57) Abstract :
The present disclosure relates to transmitting assistance information from a first node to a second node. In one embodiment a first node includes a wireless transmitter and a wireless receiver. In response to transmitting a preference indicator for a first configuration to a second node via the wireless transmitter or receiving a reconfiguration request associated with the preference indicator for the first configuration the first node starts a timer set to a value that defines an amount of time before the first node is permitted to transmit a preference indicator for a second configuration to the second node. The first node then blocks transmission of the preference indicator for the second configuration to the second node until the timer has expired. In this manner excessive signaling of preference indicators from the first node to the second node is avoided.

No. of Pages : 43 No. of Claims : 37

(12) PATENT APPLICATION PUBLICATION
(21) Application No.26/DELNP/2015 A
(19) INDIA
(22) Date of filing of Application :02/01/2015
(43) Publication Date : 22/05/2015

(54) Title of the invention : FASTENING ARRANGEMENT HEADREST AND ASSEMBLY METHOD

(51) International classification :B60N2/48
(31) Priority Document No :10 2012 012 684.0
(32) Priority Date :27/06/2012
(33) Name of priority country :Germany
(86) International Application No :PCT/EP2013/062917
Filing Date :20/06/2013
(87) International Publication No :WO 2014/001199
(61) Patent of Addition to Application Number :NA
Filing Date :NA
(62) Divisional to Application Number :NA
Filing Date :NA

(71)**Name of Applicant :**
1)JOHNSON CONTROLS GMBH
Address of Applicant :Industriestrae 20 30 51399 Burscheid Germany
(72)**Name of Inventor :**
1)MANDUZIO Felix
2)MORINIˆRE Christophe

(57) Abstract :
The invention proposes a fastening arrangement (1) for a headrest in particular for a vehicle seat wherein the fastening arrangement has a main body (2) which is intended to hold a head supporting part wherein the main body can be fixed to a retaining rod (4) by means of a fastening element (6) and wherein the fastening element (6) is integrally connected to the main body.

No. of Pages : 12 No. of Claims : 12

(12) PATENT APPLICATION PUBLICATION
(19) INDIA
(22) Date of filing of Application :02/01/2015
(21) Application No.31/DELNP/2015 A
(43) Publication Date : 22/05/2015

(54) Title of the invention : INTERMEDIATE POLYISOCYANURATE COMPRISING MATERIALS

(51) International classification :C08G18/00,C08G18/08,C08G18/09
(31) Priority Document No :12176644.8
(32) Priority Date :17/07/2012
(33) Name of priority country :EPO
(86) International Application No :PCT/EP2013/062597
Filing Date :18/06/2013
(87) International Publication No :WO 2014/012728
(61) Patent of Addition to Application Number :NA
Filing Date :NA
(62) Divisional to Application Number :NA
Filing Date :NA

(71)**Name of Applicant :**
1)HUNTSMAN INTERNATIONAL LLC
Address of Applicant :500 Huntsman Way Salt Lake City Utah 84108 U.S.A.
(72)**Name of Inventor :**
1)ESBELIN Christian
2)VERBEKE Hugo
3)VERBEKE Hans Godelieve Guido

(57) Abstract :
A stable partly cured polyisocyanate composition is disclosed which comprises polyisocyanurate (intermediate polyisocyanurate comprising material) and which is further curable. Furthermore a process for making the intermediate (partly cured) polyisocyanurate comprising materialand a process for further curing the partly cured polyisocyanurate composition is disclosed. Also polyisocyanurate comprising materials made or obtainable from partly cured intermediate polyisocyanurate comprising material are disclosed and processes for further curing a partly cured polyisocyanurate comprising composition (intermediate material).

No. of Pages : 45 No. of Claims : 14

(12) PATENT APPLICATION PUBLICATION
(19) INDIA
(22) Date of filing of Application :07/01/2014
(21) Application No.119/DELNP/2014 A
(43) Publication Date : 22/05/2015

(54) Title of the invention : CONTINUOUS METHOD FOR THE SYNTHESIS OF POLYOLS

(51) International classification :C08G65/00,C08G65/26
(31) Priority Document No :11382226.6
(32) Priority Date :04/07/2011
(33) Name of priority country :EPO
(86) International Application No :PCT/EP2012/062920
Filing Date :03/07/2012
(87) International Publication No :WO 2013/004694
(61) Patent of Addition to Application Number :NA
Filing Date :NA
(62) Divisional to Application Number :NA
Filing Date :NA

(71)**Name of Applicant :**
1)REPSOL S.A.
Address of Applicant :Mndez lvaro 44 E 28045 Madrid Spain
(72)**Name of Inventor :**
1)ALMENA MU'OZ Beatriz
2)RUBIO RODRGUEZ Carlos
3)FERNNDEZ VILLAR Flix

(57) Abstract :
The present invention is directed to the synthesis of polyols in a continuous process which comprises the continuous generation of oligomeric polyoxyalkylene polyether polyol by acid catalysis.

No. of Pages : 20 No. of Claims : 17

(12) PATENT APPLICATION PUBLICATION
(21) Application No.1468/DELNP/2014 A
(19) INDIA
(22) Date of filing of Application :26/02/2014
(43) Publication Date : 22/05/2015

(54) Title of the invention : COMPOSITION FOR USE IN BRAIN GROWTH AND/OR COGNITIVE AND/OR PSYCHOMOTOR DEVELOPMENT

(51) International classification :A23D9/00,A23L1/052,A23L1/30
(31) Priority Document No :11185600.1
(32) Priority Date :18/10/2011
(33) Name of priority country :EPO
(86) International Application No :PCT/EP2012/070281
Filing Date :12/10/2012
(87) International Publication No :WO 2013/057049
(61) Patent of Addition to Application Number :NA
Filing Date :NA
(62) Divisional to Application Number :NA
Filing Date :NA

(71)**Name of Applicant :**
1)NESTEC S.A.
Address of Applicant :Avenue Nestl 55 CH 1800 Vevey Switzerland
(72)**Name of Inventor :**
1)GARCIA RODENAS Clara
2)ORNSTEIN Kurt

(57) Abstract :
The invention discloses a composition comprising at least one long chain polyunsaturated fatty acid at least one probiotic and a mixture of oligosaccharides said mixture containing at least one N acetylated oligosaccharide at least one sialylated oligosaccharide and at least one neutral oligosaccharide for use in brain growth and/or cognitive and/or psychomotor development. This composition is particularly adapted for use in infants notably preterm infants.

No. of Pages : 28 No. of Claims : 13

(12) PATENT APPLICATION PUBLICATION
(19) INDIA
(22) Date of filing of Application :08/01/2014

(21) Application No.166/DELNP/2014 A
(43) Publication Date : 22/05/2015

(54) Title of the invention : A SEAT

(51) International classification :A47C7/14,A47C9/02,A47C7/02
(31) Priority Document No :1110748.9
(32) Priority Date :24/06/2011
(33) Name of priority country :U.K.
(86) International Application No:PCT/GB2012/051429
Filing Date :21/06/2012
(87) International Publication No :WO 2012/175963
(61) Patent of Addition to Application Number :NA
Filing Date :NA
(62) Divisional to Application Number :NA
Filing Date :NA

(71)**Name of Applicant :**
1)FREEDMAN SEATS LTD
Address of Applicant :18 Whittlesey Street London SE 8SZ U.K.
(72)**Name of Inventor :**
1)FREEDMAN Simon Andrew

(57) Abstract :
A seat with a contoured pan comprised of two concavely shaped pads (14) adapted to support the thighs of a user at an optimal selected angle of 27 degrees to the horizontal plane. The seat further includes a leaf spring (22) linkage between the rear side of the pads (14) that allows for roll movement as a user sits on the seat. The combined features enable a user to be directed into a comfortable seating position that emulates the shape of the spine when standing.

No. of Pages : 24 No. of Claims : 15

(12) PATENT APPLICATION PUBLICATION
(21) Application No.1715/DELNP/2015 A
(19) INDIA
(22) Date of filing of Application :02/03/2015
(43) Publication Date : 22/05/2015

(54) Title of the invention : CATALYST FOR CATALYTIC CRACKING OF HYDROCARBON OIL AND METHOD FOR CATALYTIC CRACKING OF HYDROCARBON OIL

(51) International classification :B01J29/80,C10G11/05
(31) Priority Document No :2012225009
(32) Priority Date :10/10/2012
(33) Name of priority country :Japan
(86) International Application No :PCT/JP2013/077332
Filing Date :08/10/2013
(87) International Publication No :WO 2014/057931
(61) Patent of Addition to Application Number :NA
Filing Date :NA
(62) Divisional to Application Number :NA
Filing Date :NA

(71)**Name of Applicant :**
1)COSMO OIL CO. LTD.
Address of Applicant :1 1 Shibaura 1 chome Minato ku Tokyo 1058528 Japan
(72)**Name of Inventor :**
1)SAKA Yuji
2)KIMURA Tetsuya
3)CHIYODA Norihito
4)NAGAI Kenji
5)TABATA Mitsunori

(57) Abstract :
A catalyst for the catalytic cracking of a hydrocarbon oil is provided with which it is possible to produce a gasoline fraction with a high octane number in high yield while inhibiting the yield of heavy fractions from increasing in particular it is possible to produce LPG with a high propylene content in high yield. The catalyst for the catalytic cracking of a hydrocarbon oil is characterized by comprising a given amount of catalyst granules (A) which comprise a zeolite having a sodalite cage structure silicon derived from a silica sol phosphorus and aluminum that are derived from aluminum primary phosphate a clay mineral and a rare earth metal and a given amount of catalyst granules (B) which contain a pentasil type zeolite the ratio represented by (mass of the phosphorus and aluminum derived from aluminum primary phosphate that constitute the catalyst granules (A))/(mass of the pentasil type zeolite constituting the catalyst granules (B)) being 0.015 3 000.

No. of Pages : 66 No. of Claims : 3

(12) PATENT APPLICATION PUBLICATION
(21) Application No.3120/DELNP/2014 A
(19) INDIA
(22) Date of filing of Application :21/04/2014
(43) Publication Date : 22/05/2015

(54) Title of the invention : DELAYED SWELLABLE PARTICLES FOR PREVENTION OF FLUID MIGRATION THROUGH DAMAGED CEMENT SHEATHS

(51) International classification :C04B24/16,C04B24/26,C04B28/02
(31) Priority Document No :13/282599
(32) Priority Date :27/10/2011
(33) Name of priority country :U.S.A.
(86) International Application No :PCT/US2012/056618
Filing Date :21/09/2012
(87) International Publication No :WO 2013/062700
(61) Patent of Addition to Application Number :NA
Filing Date :NA
(62) Divisional to Application Number :NA
Filing Date :NA

(71)**Name of Applicant :**
1)HALLIBURTON ENERGY SERVICES INC.
Address of Applicant :10200 Bellaire Boulevard Houston TX 77072 U.S.A.
(72)**Name of Inventor :**
1)FUNKHOUSER Gary P.
2)BENKLEY James R.

(57) Abstract :
A method includes providing a cementing composition that includes an aqueous fluid a cementitious particulate and a copolymer particulate which includes a monofunctional monomer a water degradable first crosslinker and a second crosslinker. The method further includes placing the cementing composition in a subterranean formation so as to form a set cement sheath and swelling the copolymer particulate in response to a void created in the set cement sheath. The copolymer particulate allows the cementing composition to set to form the cement sheath before substantial swelling of the copolymer particulate occurs.

No. of Pages : 21 No. of Claims : 20

(12) PATENT APPLICATION PUBLICATION
(21) Application No.3122/DELNP/2014 A
(19) INDIA
(22) Date of filing of Application :21/04/2014
(43) Publication Date : 22/05/2015

(54) Title of the invention : METHOD FOR PRODUCING FORMIC ACID BY REACTING CARBON DIOXIDE WITH HYDROGEN

(51) International classification :C07C51/00,C07C51/02,C07C51/42
(31) Priority Document No :11184297.7
(32) Priority Date :07/10/2011
(33) Name of priority country :EPO
(86) International Application No :PCT/EP2012/069458
Filing Date :02/10/2012
(87) International Publication No :WO 2013/050367
(61) Patent of Addition to Application Number :NA
Filing Date :NA
(62) Divisional to Application Number :NA
Filing Date :NA

(71)**Name of Applicant :**
1)BASF SE
Address of Applicant :67056 Ludwigshafen Germany
(72)**Name of Inventor :**
1)SCHAUB Thomas
2)BEY Oliver
3)MEIER Anton
4)FRIES Donata Maria
5)HUGO Randolf

(57) Abstract :
The invention relates to a method for producing formic acid comprising the following steps: (a) reacting in a homogeneously catalyzed manner a reaction mixture (Rg) containing carbon dioxide hydrogen at least one polar solvent and at least one tertiary amine in the presence of at least one coordination catalyst in a hydrogenation reactor in order to obtain a two phase hydrogenation mixture (H) containing an upper phase (O1) which contains the at least one coordination catalyst and the at least one tertiary amine (A1) and a lower phase (U1) which contains the at least one polar solvent residues of the at least one coordination catalyst and at least one formic acid/amine adduct; (b) processing the hydrogenation mixture (H) obtained in step (a) according to one of the following steps: (b1) phase separating the hydrogenation mixture (H) obtained in step (a) in a first phase separating device into the upper phase (O1) and the lower phase (U1) or (b2) extracting the at least one coordination catalyst from the hydrogenation mixture (H) obtained in step (a) in an extraction unit with an extracting agent containing the at least one tertiary amine (A1) in order to obtain a raffinate (R1) containing the at least one formic acid/amine adduct (A2) and the at least one polar solvent and an extract (E1) containing the at least one tertiary amine (A1) and the at least one coordination catalyst or (b3) phase separating the hydrogenation mixture (H) obtained in step (a) in a first phase separating device into the upper phase (O1) and the lower phase (U1) and extracting the residues of the at least one coordination catalyst from the lower phase (U1) in an extraction unit by means of an extracting agent containing the at least one tertiary amine (A1) in order to obtain a raffinate (R2) containing the at least one formic acid/amine adduct (A2) and the at least one polar solvent and an extract (E2) containing the at least one tertiary amine (A1) and the residues of the at least one coordination catalyst; (c) separating the at least one polar solvent from the lower phase (U1) from the raffinate (R1) or from the raffinate (R2) in a first distillation device in order to obtain a distillate (D1) containing the at least one polar solvent which is fed back into the hydrogenation reactor in step (a) and a two phase bottom mixture (S1) containing an upper phase (O2) which contains the at least one tertiary amine (A1) and a lower phase (U2) which contains the at least one formic acid/amine adduct (A2); (e) cleaving the at least one formic acid/amine adduct (A2) contained in the bottom mixture (S1) or optionally in the lower phase (U2) in a thermal cleaving unit in order to obtain the at least one tertiary amine (A1) which is fed back to the hydrogenation reactor in step (a) and formic acid which is discharged from the thermal cleaving unit wherein carbon monoxide is added to the lower phase (U1) the raffinate (R1) or the raffinate (R2) directly before and/or during step (c) and/or carbon monoxide is added to the bottom mixture (S1) or optionally the bottom phase (U2) directly before and/or during step (e).

No. of Pages : 88 No. of Claims : 13

(12) PATENT APPLICATION PUBLICATION
(19) INDIA
(22) Date of filing of Application :21/04/2014
(21) Application No.3123/DELNP/2014 A
(43) Publication Date : 22/05/2015

(54) Title of the invention : HYBRID DENDRITE COPOLYMERS COMPOSITIONS THEREOF AND METHODS FOR PRODUCING THE SAME

(51) International classification :A61K8/91,C02F1/56,C08F251/00
(31) Priority Document No :61/555699
(32) Priority Date :04/11/2011
(33) Name of priority country :U.S.A.
(86) International Application No :PCT/EP2012/071741
Filing Date :02/11/2012
(87) International Publication No :WO 2013/064647
(61) Patent of Addition to Application Number :NA
Filing Date :NA
(62) Divisional to Application Number :NA
Filing Date :NA

(71)**Name of Applicant :**
1)AKZO NOBEL CHEMICALS INTERNATIONAL B.V.
Address of Applicant :Stationsstraat 77 NL 3811 MH Amersfoort Netherlands
(72)**Name of Inventor :**
1)RODRIGUES Klin Aloysius
2)STANDISH Michael L.

(57) Abstract :
Hybrid dendrite copolymer compositions include a hybrid dendrite copolymer including at least one ethylenically unsaturated first monomer at least one second ethylenically unsaturated second monomer and a naturally derived hydroxyl containing chain transfer agent as an end group. The at least one first and second ethylenically unsaturated monomers are on separate side chains of the naturally derived hydroxyl containing chain transfer agent. Methods of preparing a hybrid dendrite copolymer are also included.

No. of Pages : 64 No. of Claims : 17

(12) PATENT APPLICATION PUBLICATION
(19) INDIA
(22) Date of filing of Application :08/01/2014
(21) Application No.153/DELNP/2014 A
(43) Publication Date : 22/05/2015

(54) Title of the invention : ACTUATOR FOR CLOSING A BEVERAGE INGREDIENT HOLDER

(51) International classification :A47J31/22,A47J31/06
(31) Priority Document No :11173527.0
(32) Priority Date :12/07/2011
(33) Name of priority country :EPO
(86) International Application No :PCT/EP2012/063660
Filing Date :12/07/2012
(87) International Publication No :WO 2013/007780
(61) Patent of Addition to Application Number :NA
Filing Date :NA
(62) Divisional to Application Number :NA
Filing Date :NA

(71)**Name of Applicant :**
1)NESTEC S.A.
Address of Applicant :Av. Nestl 55 CH 1800 Vevey Switzerland
(72)**Name of Inventor :**
1)PERENTES Alexandre
2)BONACCI Enzo
3)CAPROTTI Patrick
4)GUNSTONE Andrew

(57) Abstract :
A receptacle holding unit (1) for a device for preparing a beverage from an ingredient contained in a receptacle (2) comprises: a first part (10); a second part (20) that is movable towards the first part in particular along a longitudinal axis (1) into a closed position for holding the receptacle in such unit and relatively apart from the first part into an open position for inserting the receptacle into such unit and/or for removal therefrom; a fastening device (11, 21) having a fastened configuration for fastening together the first and second parts (10, 20) in the closed position and an unfastened configuration such to enable movement of the first and second parts out of the closed configuration; and an actuator (30) movable between an open configuration and a closed configuration to drive the first part and the second part between the open and the closed positions. The actuator is movable along a straight axis (1) to drive the first part (10) and the second part (20) into the closed position and further movable along said axis (1) to actuate the fastening device (11, 21) from the unfastened configuration to the fastened configuration.

No. of Pages : 37 No. of Claims : 15

(12) PATENT APPLICATION PUBLICATION
(21) Application No.2245/DELNP/2012 A
(19) INDIA
(22) Date of filing of Application :14/03/2012
(43) Publication Date : 22/05/2015

(54) Title of the invention : NUTRITIONAL COMPOSITIONS FOR MODULATING INFLAMMATION INCLUDING EXOGENOUS VITAMIN K2

(51) International classification :A23L 1/302
(31) Priority Document No :61/242,087
(32) Priority Date :14/09/2009
(33) Name of priority country :U.S.A.
(86) International Application No :PCT/US2010/047468
Filing Date :01/09/2010
(87) International Publication No :WO 2011/031602
(61) Patent of Addition to Application Number :NA
Filing Date :NA
(62) Divisional to Application Number :NA
Filing Date :NA

(71)**Name of Applicant :**
1)NESTEC S.A.
Address of Applicant :AVENUE NESTLE 55, CH-1800 VEVEY, SWITZERLAND
(72)**Name of Inventor :**
1)BOLSTER, DOUGLAS RICHARD
2)ROUGHEAD, ZAMZAM KABIRY

(57) Abstract :
Nutritional compositions and methods of making and using the nutritional compositions are provided. In a general embodiment, the present disclosure provides a nutritional composition including exogenous vitamin K2. The nutritional compositions may further include an additional component selected from the group consisting of phosphorus, magnesium, zinc, iron, copper, manganese, calcium, vitamin D, osteopontin and combinations thereof.

No. of Pages : 29 No. of Claims : 20

(12) PATENT APPLICATION PUBLICATION
(19) INDIA
(22) Date of filing of Application :02/01/2015
(21) Application No.24/DELNP/2015 A
(43) Publication Date : 22/05/2015

(54) Title of the invention : INTEGRATED POWER PLANT AND DATA CENTER

(51) International classification :H02J3/24
(31) Priority Document No :61/655205
(32) Priority Date :04/06/2012
(33) Name of priority country :U.S.A.
(86) International Application No :PCT/US2013/044169
Filing Date :04/06/2013
(87) International Publication No :WO 2013/184718
(61) Patent of Addition to Application Number :NA
Filing Date :NA
(62) Divisional to Application Number :NA
Filing Date :NA

(71)**Name of Applicant :**
1)K2IP HOLDINGS LLC
Address of Applicant :1554 Paoli Pike Suite 325 West Chester PA 19380 U.S.A.
(72)**Name of Inventor :**
1)KRIZMAN Robert
2)KERN Earl Eugene

(57) Abstract :
A power plant in the form of a combined heat and power (CHP) plant may be colocated with a data center to provide redundant electrical power. The CHP plant and the data center may operate as an island separate from the local electrical utility grid. The CHP plant may have a redundant fuel source connection to reduce unavailability of fuel for the CHP and increase the uptime of the data center. The CHP plant may include turbines and engines to manage variable loads within the data center. The power plant may include multiple distributions busses in high availability configurations to provide highly reliable and high quality electricity to the data center. The positioning of these elements in the power plant design provides economies of scale and eliminates single points of failure commonly found in data center configurations increasing the reliability of the data center.

No. of Pages : 23 No. of Claims : 20

(12) PATENT APPLICATION PUBLICATION
(19) INDIA
(22) Date of filing of Application :21/04/2014
(21) Application No.3125/DELNP/2014 A
(43) Publication Date : 22/05/2015

(54) Title of the invention : RAZOR CARTRIDGE WITH LUBRICATION AND MOISTURIZING STRIPS

(51) International classification :B26B21/44
(31) Priority Document No :11188671.9
(32) Priority Date :10/11/2011
(33) Name of priority country :EPO
(86) International Application No :PCT/US2012/064268
Filing Date :09/11/2012
(87) International Publication No :WO 2013/070995
(61) Patent of Addition to Application Number :NA
Filing Date :NA
(62) Divisional to Application Number :NA
Filing Date :NA

(71)**Name of Applicant :**
1)THE GILLETTE COMPANY
Address of Applicant :World Shaving Headquarters IP/Legal Patent Department 3E One Gillette Park Boston Massachusetts 02127 U.S.A.
(72)**Name of Inventor :**
1)STEPHENS Alison Fiona
2)GESTER Matthias
3)BROOKS Alan

(57) Abstract :
A razor cartridge comprising a housing one or more blades disposed within the housing a moisturizing portion comprising at least 50% lipophilic materials by weight of the moisturizing portion being disposed within the housing and having a first surface area to contact the skin and a lubricating portion comprising at least 20% lubricants by weight of the lubricating portion being disposed within the housing and having a second surface area to contact the skin wherein the ratio of the first surface area to the second surface area is in the range of from 1:5 to 5:1.

No. of Pages : 33 No. of Claims : 15

(12) PATENT APPLICATION PUBLICATION
(21) Application No.1709/DELNP/2015 A
(19) INDIA
(22) Date of filing of Application :02/03/2015
(43) Publication Date : 22/05/2015

(54) Title of the invention : SPECIALIZED VIRTUAL MACHINE TO VIRTUALIZE HARDWARE RESOURCE FOR GUEST VIRTUAL MACHINES

(51) International classification :G06F9/455
(31) Priority Document No :13/592891
(32) Priority Date :23/08/2012
(33) Name of priority country :U.S.A.
(86) International Application No :PCT/US2013/056145
Filing Date :22/08/2013
(87) International Publication No :WO 2014/031833
(61) Patent of Addition to Application Number :NA
Filing Date :NA
(62) Divisional to Application Number :NA
Filing Date :NA

(71)**Name of Applicant :**
1)CITRIX SYSTEMS INC.
Address of Applicant :851 West Cypress Creek Road Fort Lauderdale Florida 33309 U.S.A.
(72)**Name of Inventor :**
1)PETROV Julian
2)STUTSMAN Sandy

(57) Abstract :
A computing system includes a graphics processing unit (GPU) and main processing circuitry to execute computer program instructions forming a hypervisor a control virtual machine (VM) and a specialized rendering VM for graphics processing. An application program of a guest VM generates graphics commands and data according to a graphics API such as Direct 3D. The rendering VM includes a graphics driver native to the GPU and is assigned pass through access to the GPU by the control VM. The rendering VM receives the graphics information from the application program via an inter VM communication channel and it uses the graphics driver to control the GPU to perform graphics rendering. The use of the rendering VM enables native graphics performance to be achieved without constraining the control VM to use a compatible operating system. The technique is generally applicable to virtualization of hardware resources by specialized VMs.

No. of Pages : 19 No. of Claims : 16

(12) PATENT APPLICATION PUBLICATION
(19) INDIA
(22) Date of filing of Application :21/04/2014
(21) Application No.3134/DELNP/2014 A
(43) Publication Date : 22/05/2015

(54) Title of the invention : SLIDE SCANNER WITH A TILTED IMAGE PLANE

(51) International classification :G02B21/36,G02B21/06,G02B21/34
(31) Priority Document No :61/537460
(32) Priority Date :21/09/2011
(33) Name of priority country :U.S.A.
(86) International Application No :PCT/CA2012/000868
Filing Date :21/09/2012
(87) International Publication No :WO 2013/040686
(61) Patent of Addition to Application Number :NA
Filing Date :NA
(62) Divisional to Application Number :NA
Filing Date :NA

(71)**Name of Applicant :**
1)HURON TECHNOLOGIES INTERNATIONAL INC.
Address of Applicant :550 Parkside Drive Unit B6 Waterloo Ontario N2L 5V4 Canada
(72)**Name of Inventor :**
1)DAMASKINOS Savvas (NMI)
2)DIXON Arthur Edward

(57) Abstract :
An instrument and method for scanning a large microscope specimen uses a light source and at least one lens to focus light from the specimen onto a detector array. The specimen holder is located on a scanning stage and the detector array is dynamically tilted about a scan direction during the scan to maintain focus across the width of the scan strip as the scan proceeds. A degree of tilt varies during the scan as is required to maintain lateral focus relative to the detector array.

No. of Pages : 23 No. of Claims : 22

(12) PATENT APPLICATION PUBLICATION
(19) INDIA
(22) Date of filing of Application :21/04/2014
(21) Application No.3135/DELNP/2014 A
(43) Publication Date : 22/05/2015

(54) Title of the invention : AN ELECTRICALLY OPERATED AEROSOL GENERATING SYSTEM HAVING AEROSOL PRODUCTION CONTROL

(51) International classification :A24F47/00,A61M15/06
(31) Priority Document No :11250874.2
(32) Priority Date :27/10/2011
(33) Name of priority country :EPO
(86) International Application No :PCT/EP2012/071169
Filing Date :25/10/2012
(87) International Publication No :WO 2013/060784
(61) Patent of Addition to Application Number :NA
Filing Date :NA
(62) Divisional to Application Number :NA
Filing Date :NA

(71)**Name of Applicant :**
1)PHILIP MORRIS PRODUCTS S.A.
Address of Applicant :Quai Jeanrenaud 3 CH 2000 Neuchatel Switzerland
(72)**Name of Inventor :**
1)FLICK Jean Marc

(57) Abstract :
There is provided a method of controlling aerosol production in an aerosol generating device the device comprising a powered aerosol generating element a flow channel configured to allow a flow of gas past the aerosol generating element and a flow sensor configured to detect the air flow in the flow channel comprising the steps of: determining a value of a first parameter related to a change in flow rate; and reducing a supply of power to the aerosol generating element depending on a result of a comparison between the value of the first parameter and a threshold value wherein the first parameter is derived from a combination of a second parameter that is a measure of a flow rate detected by the flow sensor and a third parameter related to the flow rate and wherein the third parameter is temperature power supplied to the aerosol generating element a maximum detected flow rate or a rate of change of flow rate or is derived from a combination of two or more of temperature power supplied to the aerosol generating element a maximum detected flow rate and a rate of change of flow rate. The invention provides a method of controlling aerosol production and in particular reducing or suspending aerosol production based not simply on a detected flow rate but on another measure indicative of the evolution of the flow characteristics.

No. of Pages : 28 No. of Claims : 11

(12) PATENT APPLICATION PUBLICATION
(19) INDIA
(22) Date of filing of Application :21/04/2014
(21) Application No.3136/DELNP/2014 A
(43) Publication Date : 22/05/2015

(54) Title of the invention : PROCESS FOR PRODUCING SN CONTAINING CATALYSTS

(51) International classification :B01J23/14,B01J23/835,B01J37/02
(31) Priority Document No :11189565.2
(32) Priority Date :17/11/2011
(33) Name of priority country :EPO
(86) International Application No :PCT/EP2012/072438
Filing Date :13/11/2012
(87) International Publication No :WO 2013/072289
(61) Patent of Addition to Application Number :NA
Filing Date :NA
(62) Divisional to Application Number :NA
Filing Date :NA

(71)**Name of Applicant :**
1)BASF SE
Address of Applicant :67056 Ludwigshafen Germany
(72)**Name of Inventor :**
1)HEIDEMANN Thomas
2)KUBANEK Petr
3)COELHO TSOU Joana
4)BAAS Heiko

(57) Abstract :
The present invention relates to a process for producing a supported tin containing catalyst characterized in that a solution (L) containing tin nitrate and at least one complexing agent is applied to the support where the solution (L) does not contain any solid or has a solids content of not more than 0.5% by weight based on the total amount of dissolved components.

No. of Pages : 26 No. of Claims : 20

(12) PATENT APPLICATION PUBLICATION
(21) Application No.137/DELNP/2014 A
(19) INDIA
(22) Date of filing of Application :08/01/2014
(43) Publication Date : 22/05/2015

(54) Title of the invention : PROCESSES FOR THE PREPARATION OF PERIPHERAL OPIOID ANTAGONIST COMPOUNDS AND INTERMEDIATES THERETO

(51) International classification :A01N43/40
(31) Priority Document No :61/508817
(32) Priority Date :18/07/2011
(33) Name of priority country :U.S.A.
(86) International Application No :PCT/US2012/047082
Filing Date :17/07/2012
(87) International Publication No :WO 2013/012871
(61) Patent of Addition to Application Number :NA
Filing Date :NA
(62) Divisional to Application Number :NA
Filing Date :NA

(71)**Name of Applicant :**
1)ADOLOR CORPORATION
Address of Applicant :654 Hayden Avenue Lexington Massachusetts 02421 U.S.A.
(72)**Name of Inventor :**
1)DOLLE Roland E.
2)LE BOURDONNEC Bertrand
3)MARTIN Pierre
4)MOESSNER Christian Steffen
5)SPINDLER Felix Herbert
6)SPIELVOGEL Dirk Jost

(57) Abstract :
Novel processes for the preparation of peripheral opioid antagonist compounds and intermediates thereto. The compounds prepared by the present processes may be useful for example as antagonists to the mu kappa and delta opioid receptors and thereby may be useful in the treatment of gastrointestinal motility disorders and in preventing peripheral opiate induced side effects. The present processes may offer improved yields chemical or stereochemical purity ease of preparation and/or isolation of intermediates and final product and more industrially useful reaction conditions and workability.

No. of Pages : 131 No. of Claims : 21

(12) PATENT APPLICATION PUBLICATION
(21) Application No.1710/DELNP/2015 A
(19) INDIA
(22) Date of filing of Application :02/03/2015
(43) Publication Date : 22/05/2015

(54) Title of the invention : FERRITIC STAINLESS STEEL SHEET METHOD FOR THE PRODUCTION THEREOF AND USE OF SAME ESPECIALLY IN EXHAUST LINES

(51) International classification :C22C38/00,C22C38/28,C22C38/50
(31) Priority Document No :NA
(32) Priority Date :NA
(33) Name of priority country :NA
(86) International Application No :PCT/FR2012/051969
Filing Date :03/09/2012
(87) International Publication No :WO 2014/033372
(61) Patent of Addition to Application Number :NA
Filing Date :NA
(62) Divisional to Application Number :NA
Filing Date :NA

(71)**Name of Applicant :**
1)APERAM STAINLESS FRANCE
Address of Applicant :Immeuble Czanne 30 Avenue des Fruitiers F 93200 Saint Denis France
(72)**Name of Inventor :**
1)SANTACREU Pierre Olivier
2)MIRAVAL Claudine
3)SAEDLOU Saghi

(57) Abstract :
The invention relates to a ferritic stainless steel sheet of the following composition expressed in weight percentages: trace = C = 0.03%; 0.2% =Mn =1%; 0.2 % = Si = 1%; trace = S = 0.01%; trace = P = 0.04%; 15% = Cr = 22%; trace = Ni = 0.5%; trace = Mo = 2%; trace = Cu = 0.5%; 0.160% =Ti = 1%; 0.02% = Al = 1%; 0.2% = Nb = 1%; trace = V = 0.2%; 0.009% = N = 0.03%; trace = Co = 0.2%; trace = Sn = 0.05%; rare earths (REE) = 0.1%; trace = Zr = 0.01%; the rest of the composition consisting of iron and inevitable impurities resulting from the processing thereof; the Al and rare earth (REE) contents satisfying the relation: Al + 30 x REE = 0.15%; the Nb C N and Ti contents in % satisfying the relation: 1 / [Nb + (7/4) x Ti 7 x (C + N)] = 3; said sheet having an entirely recrystallised structure and an average ferritic grain size of between 25 and 65 µm. The invention also relates to a method for the production of such a ferritic stainless steel sheet and to the use thereof for the production of parts involving shaping and welding that are to be subjected to a periodic use temperature of between 50° C and 700° C and to a projection of a mixture of water urea and ammonia.

No. of Pages : 23 No. of Claims : 7

(12) PATENT APPLICATION PUBLICATION
(19) INDIA
(22) Date of filing of Application :01/01/2015
(21) Application No.3/DELNP/2015 A
(43) Publication Date : 22/05/2015

(54) Title of the invention : PEGYLATED OXM VARIANTS

(51) International classification :A61K38/26
(31) Priority Document No :61/655367
(32) Priority Date :04/06/2012
(33) Name of priority country :U.S.A.
(86) International Application No :PCT/IL2013/050481
Filing Date :04/06/2013
(87) International Publication No :WO 2013/183052
(61) Patent of Addition to Application Number :NA
Filing Date :NA
(62) Divisional to Application Number :NA
Filing Date :NA

(71)**Name of Applicant :**
1)OPKO BIOLOGICS LTD.
Address of Applicant :7 Golda Meir Street 2nd Floor 74140 Nes Ziona Israel
(72)**Name of Inventor :**
1)FIMA Udi Eyal
2)HERSHKOVITZ Oren

(57) Abstract :
A composition which includes oxyntomodulin and polyethylene glycol polymer (PEG polymer) linked via a reversible linker such as 9-fluorenylmethoxycarbonyl (Fmoc) or 2- sulfo-9-fluorenylmethoxycarbonyl (FMS) is disclosed. Pharmaceutical compositions comprising the reverse pegylated oxyntomodulin and methods of using same are also disclosed.

No. of Pages : 89 No. of Claims : 43

(12) PATENT APPLICATION PUBLICATION
(21) Application No.3138/DELNP/2014 A
(19) INDIA
(22) Date of filing of Application :21/04/2014
(43) Publication Date : 22/05/2015

(54) Title of the invention : ANNULAR WALL OF A COMBUSTION CHAMBER WITH IMPROVED COOLING AT THE PRIMARY AND/OR DILUTION HOLES

(51) International classification :F23R3/06
(31) Priority Document No :1159704
(32) Priority Date :26/10/2011
(33) Name of priority country :France
(86) International Application No :PCT/FR2012/052446
Filing Date :25/10/2012
(87) International Publication No :WO 2013/060987
(61) Patent of Addition to Application Number :NA
Filing Date :NA
(62) Divisional to Application Number :NA
Filing Date :NA

(71)**Name of Applicant :**
1)SNECMA
Address of Applicant :2 Boulevard du Gnral Martial Valin F 75015 Paris France
2)TURBOMECA
(72)**Name of Inventor :**
1)RULLAUD Matthieu Fran§ois
2)CARRERE Bernard Joseph Jean Pierre
3)VERDIER Hubert Pascal

(57) Abstract :
An annular wall of a combustion chamber (10) of a turbo engine comprising a cold side (16a 18a) and a hot side (16b 18b) a plurality of primary and dilution holes (30) distributed in a circumferential row to allow air circulating on the cold side (16a 18a) of the annular wall to penetrate into the hot side (16b 18b) in order provide the dilution of an air/fuel mixture; and a plurality of cooling holes (32) to allow air circulating on the cold side (16a 18a) of the annular wall to penetrate into the hot side (16b 18b) in order to form a film of cooling air along the annular wall the cooling holes being distributed in a plurality of circumferential rows spaced axially apart from one another and the geometrical axes of each of the cooling holes being inclined in an axial direction of flow D of the combustion gases by an angle of inclination A1 relative to a normal N of the annular wall. The wall further comprises a plurality of additional cooling holes (34) arranged directly downstream from the dilution holes and distributed in a plurality of circumferential rows spaced axially apart from one another the geometrical axes of each of the additional cooling holes being arranged in a plane perpendicular to said axial direction D and inclined by an angle of inclination 82 relative to a normal N of said annular wall.

No. of Pages : 16 No. of Claims : 12

(12) PATENT APPLICATION PUBLICATION
(21) Application No.14/DELNP/2015 A
(19) INDIA
(22) Date of filing of Application :01/01/2015
(43) Publication Date : 22/05/2015

(54) Title of the invention : DRIVE SYSTEM OF SEMICONDUCTOR LIGHT SOURCE AND SEMICONDUCTOR LIGHTING DEVICE

(51) International classification :H05B37/02,F21S2/00
(31) Priority Document No :201210181467.1
(32) Priority Date :04/06/2012
(33) Name of priority country :China
(86) International Application No :PCT/CN2013/076105
Filing Date :22/05/2013
(87) International Publication No :WO 2013/181993
(61) Patent of Addition to Application Number :NA
Filing Date :NA
(62) Divisional to Application Number :NA
Filing Date :NA

(71)**Name of Applicant :**
1)OPPLE LIGHTING CO. LTD.
Address of Applicant :Room 411 Building 1 No. 6111 Longdong Avenue Pudong New District Shanghai 201201 China
(72)**Name of Inventor :**
1)QI Xiaoming

(57) Abstract :
Disclosed are a drive system of a semiconductor light source and a semiconductor lighting device. The drive system comprises: a transformer the transformer comprising a first coil (201) and a second coil (202) mutually coupled to each other the second coil (202) being used for receiving an input voltage; a switch device which is connected in series to the second coil (202) and used for controlling energy storage and energy release of the second coil (202); and an output device which is connected in parallel to the second coil (202) and used for supplying power to the semiconductor light source wherein the first coil (201) of the transformer is induced by the second coil (202) to generate a sensing signal which is used for controlling the switching on and switching off of the switch device.

No. of Pages : 18 No. of Claims : 10

(12) PATENT APPLICATION PUBLICATION
(19) INDIA
(22) Date of filing of Application :24/02/2012
(21) Application No.1688/DELNP/2012 A
(43) Publication Date : 22/05/2015

(54) Title of the invention : CASSETTE WITH INFUSION SET CONTAINING SPRING-BIASED ANTI-FREEFLOW MECHANISM FOR PERISTALTIC INFUSION PUMP

(51) International classification :A61M 5/142
(31) Priority Document No :61/238,386
(32) Priority Date :31/08/2009
(33) Name of priority country :U.S.A.
(86) International Application No :PCT/US2010/041323
Filing Date :08/07/2010
(87) International Publication No :WO 2011025589
(61) Patent of Addition to Application Number :NA
Filing Date :NA
(62) Divisional to Application Number :NA
Filing Date :NA

(71)**Name of Applicant :**
1)NESTEC S.A.
Address of Applicant :ANENUE NESTLE 55, CH-1800 VEVEY, SWITZERLAND
(72)**Name of Inventor :**
1)HARIHARESAN, SERALAATHAN
2)HIGGINS, JAMES ALLEN
3)WEST, DAVID WOODRUFF

(57) Abstract :
Flow control devices.- In a general embodiment, the present disclosure provides a cassette (30) comprising a housing having a flow restrictor (34), and a tube (36) attached to the housing and positioned adjacent the flow restrictor. The flow restrictor may be so constructed and arranged to rotate from a first position in which the flow restrictor prevents fluid flow through the tube to a second position in which fluid is able to flow through the tube when the cassette is positioned inside a pumping device. As a result, the cassette is designed to prevent free flow of fluid when an enteral feeding tube set is not installed in a pumping device.

No. of Pages : 18 No. of Claims : 17

(12) PATENT APPLICATION PUBLICATION
(19) INDIA
(22) Date of filing of Application :02/01/2015
(21) Application No.30/DELNP/2015 A
(43) Publication Date : 22/05/2015

(54) Title of the invention : PANT SHAPED CLOTHING ARTICLE AND MANUFACTURING METHOD THEREFOR

(51) International classification	:A61F13/496,A61F13/15,A61F13/49
(31) Priority Document No	:2012141397
(32) Priority Date	:22/06/2012
(33) Name of priority country	:Japan
(86) International Application No	:PCT/JP2013/066220
Filing Date	:12/06/2013
(87) International Publication No	:WO 2013/191058
(61) Patent of Addition to Application Number	:NA
Filing Date	:NA
(62) Divisional to Application Number	:NA
Filing Date	:NA

(71)**Name of Applicant :**
1)KAO CORPORATION
Address of Applicant :14 10 Nihonbashi Kayabacho 1 chome Chuo ku Tokyo 1038210 Japan
(72)**Name of Inventor :**
1)KOBAYASHI Kenji
2)IWASAKI Atsushi

(57) Abstract :
Provided is a pant shaped clothing article which has an abdominal section (21) that is disposed on the abdominal side of the wearer a crotch section (13) that is disposed on the crotch and a back section (23) that is disposed on the back and which is formed in a pant shape by joining the side edges (25) of the abdominal section with the side edges (25) of the back section. The abdominal section and the back section (23) are configured from an outer wrapper (11) in which a first sheet material (33) and a second sheet material (31) are laminated. Multiples of the first sheet material (33) are disposed in the longitudinal direction of the outer wrapper (11) and the multiple first sheets (33) are disposed so as to be adjacent without overlapping one another. The outer wrapper (11) is elastic in the waist encircling direction.

No. of Pages : 79 No. of Claims : 16

(12) PATENT APPLICATION PUBLICATION
(19) INDIA
(22) Date of filing of Application :21/04/2014
(21) Application No.3140/DELNP/2014 A
(43) Publication Date : 22/05/2015

(54) Title of the invention : ALTERNATOR ISOLATING DECOUPLER

(51) International classification :F16D41/20
(31) Priority Document No :13/273349
(32) Priority Date :14/10/2011
(33) Name of priority country :U.S.A.
(86) International Application No :PCT/US2012/059174
Filing Date :08/10/2012
(87) International Publication No :WO 2013/055610
(61) Patent of Addition to Application Number :NA
Filing Date :NA
(62) Divisional to Application Number :NA
Filing Date :NA

(71)**Name of Applicant :**
1)THE GATES CORPORATION
Address of Applicant :A Delaware Corporation 1551 Wewatta Street Denver CO 80202 U.S.A.
(72)**Name of Inventor :**
1)SCHNEIDER Dean
2)WARD Peter
3)SERKH Alexander
4)ALI Imtiaz
5)HARVEY John

(57) Abstract :
An alternator isolating decoupler comprising an alternator shaft (100) a one way clutch (70) engaged with the alternator shaft a first wrap spring (40) releasably engaged with the one way clutch a second wrap spring (50) releasably engaged with the one way clutch the second wrap spring arranged in parallel with the first wrap spring the first wrap spring and the second wrap spring in nested relation the first wrap spring and the second wrap spring each having an end (41 51) releasably engagable with an end cap (90) the end cap fixedly connected to an outer housing (10) the first wrap spring and the second wrap spring each engaged in series with a torsion spring (20) the torsion spring engaged with the outer housing and the outer housing engaged with an alternator rotor (110).

No. of Pages : 21 No. of Claims : 15

(12) PATENT APPLICATION PUBLICATION
(21) Application No.11/DELNP/2015 A
(19) INDIA
(22) Date of filing of Application :01/01/2015
(43) Publication Date : 22/05/2015

(54) Title of the invention : VALVE TIMING CONTROLLER

(51) International classification :F01L1/356,F02D13/02
(31) Priority Document No :2012135166
(32) Priority Date :14/06/2012
(33) Name of priority country :Japan
(86) International Application No :PCT/JP2013/065482
Filing Date :04/06/2013
(87) International Publication No :WO 2013/187284
(61) Patent of Addition to Application Number :NA
Filing Date :NA
(62) Divisional to Application Number :NA
Filing Date :NA

(71)**Name of Applicant :**
1)AISIN SEIKI KABUSHIKI KAISHA
Address of Applicant :1 Asahi machi 2 chome Kariya shi Aichi 4488650 Japan
(72)**Name of Inventor :**
1)KOBAYASHI Masaki

(57) Abstract :
Provided is a valve timing controller capable of a faster response when the relative rotational phase is varied. When an ECU outputs a phase maintenance signal that indicates a phase maintenance state in which control is possible to maintain the relative rotational phase within a prescribed range by way of working fluid in the advance chamber and retard chamber while the valve timing controller is in a locked state an intermediate lock mechanism switches to an unlocked state and the relative rotational phase is maintained in an intermediate locked phase.

No. of Pages : 30 No. of Claims : 4

(12) PATENT APPLICATION PUBLICATION
(19) INDIA
(22) Date of filing of Application :08/01/2014
(21) Application No.138/DELNP/2014 A
(43) Publication Date : 22/05/2015

(54) Title of the invention : METHOD FOR MANUFACTURING BATTERY PACK AND BATTERY PACK

(51) International classification :H01M2/10,H01M2/30,H01M10/44
(31) Priority Document No :2011152373
(32) Priority Date :08/07/2011
(33) Name of priority country :Japan
(86) International Application No :PCT/JP2012/004291
Filing Date :03/07/2012
(87) International Publication No :WO 2013/008409
(61) Patent of Addition to Application Number :NA
Filing Date :NA
(62) Divisional to Application Number :NA
Filing Date :NA

(71)**Name of Applicant :**
1)NEC ENERGY DEVICES LTD.
Address of Applicant :1120 Shimokuzawa Chuo ku Sagamihara shi Kanagawa 2525298 Japan
(72)**Name of Inventor :**
1)YOSHIDA Tadahiro

(57) Abstract :
This battery pack which has a plurality of battery units with different full charge capacities is charged and discharged to the maximum. This method for manufacturing the battery pack is provided with the following steps. First battery cells with different full charge capacities are individually charged until fully charged (charging step S120). Then a plurality of fully charged battery cells are connected in series (connection step S130).

No. of Pages : 77 No. of Claims : 18

(12) PATENT APPLICATION PUBLICATION
(19) INDIA
(22) Date of filing of Application :08/01/2014
(21) Application No.167/DELNP/2014 A
(43) Publication Date : 22/05/2015

(54) Title of the invention : CONTAINER CLOSURE HAVING MEANS FOR INTRODUCING AN ADDITIVE INTO THE CONTENTS OF THE CONTAINER

(51) International classification :B65D51/28
(31) Priority Document No :1110722.4
(32) Priority Date :24/06/2011
(33) Name of priority country :U.K.
(86) International Application No :PCT/GB2012/051341
Filing Date :13/06/2012
(87) International Publication No :WO 2012/175934
(61) Patent of Addition to Application Number :NA
Filing Date :NA
(62) Divisional to Application Number :NA
Filing Date :NA

(71)**Name of Applicant :**
1)GIZMO PACKAGING LIMITED
Address of Applicant :Rocep Business Park Rocep Drive Deanpark Renfrew Strathclyde PA4 8XY U.K.
(72)**Name of Inventor :**
1)FRUTIN Bernard D

(57) Abstract :
A closure device (10) for releasing an additive liquid (20) into a liquid in a container (12) by operation of the closure device and to a container including such a closure device. The closure device comprises a cap member (20) defining a fluid chamber (22) having a neck (26) at a lower end thereof and a casing (50) substantially surrounding the fluid chamber and having a plug member (52) extending into the neck of the fluid chamber wherein the neck has an upper portion (28) having a first diameter and wherein the plug member comprises a primary circumferential seal (84) adapted to seal between the plug member and the upper portion of the neck an upper circumferential seal (88) adapted to seal between the plug member and the upper portion of the neck and a nozzle (80) directed away from the fluid chamber and in fluid communication with the exterior surface of the plug member below the primary circumferential seal. The cap member is arranged to be lifted relative to the casing from a closed position through an open position to a sealed position. 67. The method of any of claims 64 to 66 including the additional step of the cap member being raised by relating the cap member such that the fluid chamber is raised screw thread action relative to the casing

No. of Pages : 51 No. of Claims : 67

(12) PATENT APPLICATION PUBLICATION
(21) Application No.3147/DELNP/2014 A
(19) INDIA
(22) Date of filing of Application :21/04/2014
(43) Publication Date : 22/05/2015

(54) Title of the invention : EX VIVO MATURATION OF ISLET CELLS

(51) International classification :G01N33/567
(31) Priority Document No :61/540288
(32) Priority Date :28/09/2011
(33) Name of priority country :U.S.A.
(86) International Application No :PCT/US2012/058087
Filing Date :28/09/2012
(87) International Publication No :WO 2013/049693
(61) Patent of Addition to Application Number :NA
Filing Date :NA
(62) Divisional to Application Number :NA
Filing Date :NA

(71)**Name of Applicant :**
1)ISLET SCIENCES INC.
Address of Applicant :641 Lexington Avenue 6th Floor New York NY 10022 U.S.A.
(72)**Name of Inventor :**
1)LAKEY Jonathan RT

(57) Abstract :
The invention relates to methods for promoting maturation of islet cells from pre weaned mammals for the purpose of optimizing the islets for their use as donor tissue for xenotransplantation. The method of the invention removes the pancreas from donor animals and reduces the pancreas tissue to fragments that are greater than the size of an intact islet while retaining islets in their whole insulin producing condition. The method of the invention also serially cultures the digested tissue in novel maturation media that enhance the glucose responsiveness of the cultured islets and selects islets that are sufficiently glucose responsive for use in transplantation procedures.

No. of Pages : 25 No. of Claims : 12

(12) PATENT APPLICATION PUBLICATION
(21) Application No.121/DEL/2012 A
(19) INDIA
(22) Date of filing of Application :13/01/2012
(43) Publication Date : 22/05/2015

(54) Title of the invention : DESIGN OF GUAR DEHULLING MACHINE FOR GUAR GUM SPLIT PRODUCTION

(51) International classification :B21G
(31) Priority Document No :NA
(32) Priority Date :NA
(33) Name of priority country :NA
(86) International Application No :NA
Filing Date :NA
(87) International Publication No :NA
(61) Patent of Addition to Application Number :NA
Filing Date :NA
(62) Divisional to Application Number :NA
Filing Date :NA

(71)**Name of Applicant :**
1)INDIAN COUNCIL OF AGRICULTURAL RESEARCH (ICAR)
Address of Applicant :KRISHI BHAWAN-I, DR. RAJENDRA PRASAD ROAD, NEW DELHI-110 001 Delhi India
(72)**Name of Inventor :**
1)VISHWAKARMA RAJESH KUMAR
2)NANDA SAROJ KUMAR
3)SHIVHARE UMA SHANKAR

(57) Abstract :
The guar seed contains 30-35% galactomannan located in endosperm. The conventional process for gum extraction from seed involves splitting the seed, separation of germ, dehulling, separation of hull, and grinding of the endosperm to different sizes and refining of the gum powder. Guar is subjected to heat (120-140°C) to overcome this difficulty in dehulling in the traditional process. In the present invention, a guar dehulling machine is designed, developed and tested for dehulling guar seed and better recovery of endosperm (refined guar gum splits). The pretreatment process before dehulling the guar seed is based on patent application (Application number: 1283/DEL/2007; Publication date: 03/04/2009) After pretreatment, the seed is immediately fed to the designed dehulling machine where hull of the pretreated guar seed is detached. The hull is removed from the dehulled lot using aspiration system built with the machine. The dehulled and unhulled seeds are separated using conventional grader. Dehulled seeds are dried using hot air to bring moisture content to about 10% (dry basis). Dehulled seeds are then split in to two halves using bun-mill or any other suitable device. Polishing of the splits removes traces of germ from cotyledon. The refined guar gum splits thus obtained are separated from the germs using grader. The neat endosperm (also known as refined guar gum splits), thus obtained free from hull and germ, can be used to make quality guar gum powder whereas the hull free germ can be utilized for suitable value added products.

No. of Pages : 16 No. of Claims : 8

(12) PATENT APPLICATION PUBLICATION
(19) INDIA
(22) Date of filing of Application :21/04/2014
(21) Application No.3157/DELNP/2014 A
(43) Publication Date : 22/05/2015

(54) Title of the invention : SYSTEMS AND METHODS FOR VOID REDUCTION IN A SOLDER JOINT

(51) International classification :H05K3/34
(31) Priority Document No :61/539260
(32) Priority Date :26/09/2011
(33) Name of priority country :U.S.A.
(86) International Application No :PCT/US2012/057116
Filing Date :25/09/2012
(87) International Publication No :WO 2013/049061
(61) Patent of Addition to Application Number :NA
Filing Date :NA
(62) Divisional to Application Number :NA
Filing Date :NA

(71)**Name of Applicant :**
1)ALPHA METALS INC.
Address of Applicant :109 Corporate Blvd. South Plainfield NJ 07080 U.S.A.
(72)**Name of Inventor :**
1)KOEP Paul J.
2)MICHIEL De Monchy A
3)TORMEY Ellen S.

(57) Abstract :
In accordance with one or more aspects a method of reducing void formation in a solder joint may comprise applying a solder paste deposit to a substrate placing a solder preform in the solder paste deposit disposing a device on the solder preform and the solder paste deposit and processing the solder paste deposit and the solder preform to form the solder joint between the device and the substrate. In some aspects the substrate is a printed circuit board and the device is an integrated circuit package.

No. of Pages : 28 No. of Claims : 23

(12) PATENT APPLICATION PUBLICATION
(21) Application No.3158/DELNP/2014 A
(19) INDIA
(22) Date of filing of Application :21/04/2014
(43) Publication Date : 22/05/2015

(54) Title of the invention : LEAN ELECTROLYTE FOR BIOCOMPATIBLE PLASMAELECTROLYTIC COATINGS ON MAGNESIUM IMPLANT MATERIAL

(51) International classification :A61L31/02,A61L31/08,A61L31/14
(31) Priority Document No :61/556563
(32) Priority Date :07/11/2011
(33) Name of priority country :U.S.A.
(86) International Application No :PCT/US2012/063815
Filing Date :07/11/2012
(87) International Publication No :WO 2013/070669
(61) Patent of Addition to Application Number :NA
Filing Date :NA
(62) Divisional to Application Number :NA
Filing Date :NA

(71)**Name of Applicant :**
1)SYNTHES GMBH
Address of Applicant :Eimattstrasse 3 CH 4435 Oberdorf Switzerland
(72)**Name of Inventor :**
1)IMWINKELRIED Thomas
2)KURZE Peter
3)BECK Stefan
4)BANERJEE Dora
5)SCHWARZ Tamara

(57) Abstract :
The present disclosure is directed at least in part to a method of producing ceramic layers on magnesium and its alloys a magnesium implant with a ceramic layer made by the method and a magnesium implant having a biocompatible ceramic layer substantially free of material which impairs the biocompatibility of said biocompatible ceramic layer. In an exemplary embodiment the method of producing ceramic layers on magnesium and its alloys includes (a) immersing an implant and a metal sheet into the aqueous electrolyte bath said aqueous electrolyte bath including: ammoniac diammonium hydrogen phosphate and urea and wherein the implant is made of magnesium or its alloy; (b) performing a anodic oxidation by passing a current between the implant the metal sheet and through the aqueous electrolyte bath wherein the implant is connected to a positive pole of a current source and the metal sheet is connected to a negative pole of the current source; (c) applying a current density selected to form sparks on said implant to thereby form a ceramic layer on said implant.

No. of Pages : 44 No. of Claims : 15

(12) PATENT APPLICATION PUBLICATION
(19) INDIA
(22) Date of filing of Application :02/01/2015
(21) Application No.23/DELNP/2015 A
(43) Publication Date : 22/05/2015

(54) Title of the invention : ENERGY STORAGE BATTERY

(51) International classification :H01M8/18
(31) Priority Document No :NA
(32) Priority Date :NA
(33) Name of priority country :NA
(86) International Application No :PCT/JP2012/071223
Filing Date :22/08/2012
(87) International Publication No :WO 2014/030230
(61) Patent of Addition to Application Number :NA
Filing Date :NA
(62) Divisional to Application Number :NA
Filing Date :NA

(71)**Name of Applicant :**
1)NISSIN ELECTRIC CO. LTD.
Address of Applicant :47 Umezu Takase cho Ukyo ku Kyoto shi Kyoto 6158686 Japan
(72)**Name of Inventor :**
1)OKUMURA Yasuyuki
2)DEGUCHI Hiroshige
3)HUANG Lan
4)YAMANOUCHI Shosuke

(57) Abstract :
A positive electrode electrolyte solution (22) and a negative electrode electrolyte solution (32) that are used in this energy storage battery have a pH within the range from 2 to 8 (inclusive). An ion exchange membrane which is obtained by graft polymerizing styrene sulfonate to a resin film base that uses an ethylene vinyl alcohol copolymer as a matrix is used as a diaphragm (12) of this energy storage battery.

No. of Pages : 18 No. of Claims : 3

(12) PATENT APPLICATION PUBLICATION
(21) Application No.25/DELNP/2015 A
(19) INDIA
(22) Date of filing of Application :02/01/2015
(43) Publication Date : 22/05/2015

(54) Title of the invention : BLAST FURNACE OPERATING METHOD AND TUBE BUNDLE TYPE LANCE

(51) International classification :C21B7/00,C21B5/00
(31) Priority Document No :2012157909
(32) Priority Date :13/07/2012
(33) Name of priority country :Japan
(86) International Application No :PCT/JP2013/068945
Filing Date :11/07/2013
(87) International Publication No :WO 2014/010660
(61) Patent of Addition to Application Number :NA
Filing Date :NA
(62) Divisional to Application Number :NA
Filing Date :NA

(71)**Name of Applicant :**
1)JFE STEEL CORPORATION
Address of Applicant :2 3 Uchisaiwai cho 2 chome Chiyoda ku Tokyo 1000011 Japan
(72)**Name of Inventor :**
1)MURAO Akinori
2)FUJIWARA Daiki

(57) Abstract :
To provide an efficient method for operating a blast furnace with which an improvement in cooling power and an improvement in flammability are both seen alongside a lowering of the consumption rate of reducing agents without making the outer diameter of a lance bigger and a tube bundle type lance used when this method is put into practice. [Solution] In a blast furnace operating method in which at least a solid reducing agent is blown into a furnace from a tuy¨re using a lance a blast furnace operating method and tube bundle type lance are provided in which when only a solid reducing agent both a solid reducing agent and a combustion supporting gas or all three of a solid reducing agent a combustion supporting gas and a gaseous reducing agent are blown into the furnace of the blast furnace at the same time using a tube bundle type lance in which a plurality of blowing in tubes arranged in parallel are bundled together and housed within a lance main tube the solid reducing agent the combustion supporting gas and the gaseous reducing agent are blown in via any of said blowing in tubes.

No. of Pages : 48 No. of Claims : 23

(12) PATENT APPLICATION PUBLICATION
(19) INDIA
(22) Date of filing of Application :02/01/2015
(21) Application No.29/DELNP/2015 A
(43) Publication Date : 22/05/2015

(54) Title of the invention : SOLAR CELL

(51) International classification :H01L31/0747
(31) Priority Document No :NA
(32) Priority Date :NA
(33) Name of priority country :NA
(86) International Application No :PCT/EP2012/062776
Filing Date :29/06/2012
(87) International Publication No :WO 2014/000826
(61) Patent of Addition to Application Number :NA
Filing Date :NA
(62) Divisional to Application Number :NA
Filing Date :NA

(71)**Name of Applicant :**
1)ECOLE POLYTECHNIQUE FEDERALE DE LAUSANNE (EPFL)
Address of Applicant :EPFL TTO EPFL Innovation Park J CH 1015 Lausanne Switzerland
(72)**Name of Inventor :**
1)BALLIF Christophe
2)GEISSBHLER Jonas

(57) Abstract :
The present invention relates to a solar cell comprising a semiconductor wafer (1) an emitter formed by at least one emitter region (20) which comprises at least a first layer (3) of a first conductivity type and a first contact layer (4) allowing a carrier extraction or injection a backcontact comprising at least a second layer (6) of a second conductivity type opposite of said first conductivity type and a second contact layer (4) allowing a carrier extraction or injection electrical contacts (8,9) which are connected to said emitter regions (20) and said backcontact respectively and designed to transport an electrical current out of the solar cell. According to the invention the area of the emitter covers between 0.5% to 15% of the area of a side of the wafer (1) on which the emitter regions (20) are provided the rest of the area of said side of the wafer (1) being covered by first passivating regions (40) which comprise at least a first passivating layer (12,16) and at least one first optional additional layer which makes that the first passivating layer does not allow a carrier extraction or injection said first passivating regions being not fully covered by the first layer (3) of the first conductivity type of the emitter regions (20).

No. of Pages : 27 No. of Claims : 22

(12) PATENT APPLICATION PUBLICATION
(21) Application No.3166/DELNP/2014 A
(19) INDIA
(22) Date of filing of Application :21/04/2014
(43) Publication Date : 22/05/2015

(54) Title of the invention : OPERATING METHOD FOR UREA MANUFACTURING PLANT FORMED FROM MULTIPLE SYSTEMS

(51) International classification :C01C1/02
(31) Priority Document No :NA
(32) Priority Date :NA
(33) Name of priority country :NA
(86) International Application No :PCT/JP2011/079098
Filing Date :15/12/2011
(87) International Publication No :WO 2013/088564
(61) Patent of Addition to Application Number :NA
Filing Date :NA
(62) Divisional to Application Number :NA
Filing Date :NA

(71)**Name of Applicant :**
1)MITSUBISHI HEAVY INDUSTRIES LTD.
Address of Applicant :16 5 Konan 2 chome Minato ku Tokyo 1088215 Japan
(72)**Name of Inventor :**
1)IIJIMA Masaki

(57) Abstract :
Provided is an operating method for a urea manufacturing plant which is formed from a plurality of systems and which can prevent large reductions in urea manufacturing even when a facility for synthesizing ammonia has been stopped. When a urea manufacturing plant with at least two or more systems is set up in parallel when urea is manufactured from CO and ammonia and when one ammonia manufacturing facility (10A) is stopped liquefied ammonia that is stored by the stopped system is used and the quantity of CO recovery in a CO recovery facility (23) in another ammonia synthesis system (10B) is increased. Using this recovered CO from this increase and the liquefied ammonia synthesis of urea can be continued by a device for urea synthesis (30A) even with the system that is stopped. As a result synthesis of urea can be carried out normally with the remaining one system of the two systems operating and synthesis of urea can be continued even at a single system urea manufacturing plant that would have stopped conventionally.

No. of Pages : 30 No. of Claims : 2

(12) PATENT APPLICATION PUBLICATION
(21) Application No.2/DELNP/2015 A
(19) INDIA
(22) Date of filing of Application :01/01/2015
(43) Publication Date : 22/05/2015

(54) Title of the invention : GRANULATED FOAM CONTROL COMPOSITION

(51) International classification :C11D3/37,C08L83/04,B01D19/04
(31) Priority Document No :PCT/CN2012/076618
(32) Priority Date :08/06/2012
(33) Name of priority country :China
(86) International Application No :PCT/CN2013/071488
Filing Date :07/02/2013
(87) International Publication No :WO 2013/181948
(61) Patent of Addition to Application Number :NA
Filing Date :NA
(62) Divisional to Application Number :NA
Filing Date :NA

(71)**Name of Applicant :**
1)DOW CORNING CORPORATION
Address of Applicant :2200 West Salzburg Road Midland Michigan 48686 0994 U.S.A.
(72)**Name of Inventor :**
1)SONG Haiyan

(57) Abstract :
A granulated foam control composition comprises a foam control agent based on a polydiorganosiloxane fluid an organic additive of melting point 45°C to 100°C comprising a polyol ester a water soluble particulate inorganic carrier a polymer having a net cationic charge and a surfactant. The mean number of carbon atoms in the organo groups of the polydiorganosiloxane fluid is at least 1.3. The foam control agent includes a hydrophobic filler dispersed in the polydiorganosiloxane fluid and optionally an organosilicone resin. The polyol ester is miscible with the polydiorganosiloxane fluid.

No. of Pages : 36 No. of Claims : 16

(12) PATENT APPLICATION PUBLICATION
(19) INDIA
(22) Date of filing of Application :02/01/2015
(21) Application No.20/DELNP/2015 A
(43) Publication Date : 22/05/2015

(54) Title of the invention : HERBICIDAL FORMULATION

(51) International classification	:A01N43/40,A01N37/40,A01N25/02
(31) Priority Document No	:61/666957
(32) Priority Date	:02/07/2012
(33) Name of priority country	:U.S.A.
(86) International Application No	:PCT/EP2013/063901
Filing Date	:02/07/2013
(87) International Publication No	:WO 2014/006026
(61) Patent of Addition to Application Number	:NA
Filing Date	:NA
(62) Divisional to Application Number	:NA
Filing Date	:NA

(71)**Name of Applicant :**
1)BASF SE
Address of Applicant :67056 Ludwigshafen Germany
(72)**Name of Inventor :**
1)SCHNABEL Gerhard
2)SIEVERNICH Bernd
3)MEID Torsten

(57) Abstract :
Disclosed is a herbicidal formulation containing: (a1) at least one herbicidal active substance from the class of ACC inhibitors; (a2) optionally at least one safener; (a3) optionally at least one further herbicidal active substance that is different to (a1) and (a2); (b) one or a plurality of solvents of formula (I) R CO NRR in which R is a C C hydrocarbon radical and R and R are both or individually a Ci Cu hydrocarbon radical or a C C hydroxyl hydrocarbon radical; one or a plurality of aromatic solvents; one or a plurality of surfactants from the group of C C alkyl alcohols which are alcoxylated the terminal hydroxyl groups of these compounds optionally being closed by an alkyl cycloalkyl or acryl radical with 1 24 carbon atom end groups; (e) one or a plurality of emulsifiers; (f) optionally one or a plurality of additives and (g) optionally water. The herbicidal formulation is particularly suited for combatting undesired grasses.

No. of Pages : 23 No. of Claims : 15

(12) PATENT APPLICATION PUBLICATION
(19) INDIA
(22) Date of filing of Application :21/04/2014
(21) Application No.3162/DELNP/2014 A
(43) Publication Date : 22/05/2015

(54) Title of the invention : METHOD FOR HANDLING ELECTRONIC VOUCHERS

(51) International classification :G06Q20/32
(31) Priority Document No :10 2011 114 638.9
(32) Priority Date :04/10/2011
(33) Name of priority country :Germany
(86) International Application No :PCT/DE2012/200061
Filing Date :11/09/2012
(87) International Publication No :WO 2013/050033
(61) Patent of Addition to Application Number :NA
Filing Date :NA
(62) Divisional to Application Number :NA
Filing Date :NA

(71)**Name of Applicant :**
1)MEHLER Oliver C.
Address of Applicant :Am Schilt 18A 78351 Bodman Ludwigshafen Germany
(72)**Name of Inventor :**
1)MEHLER Oliver C.

(57) Abstract :
The invention relates to a method for handling electronic vouchers especially in retail and/or service trade wherein a cashless payment for one or more good(s) and/or service(s) products is carried out at a payment terminal using a mobile terminal particularly a cell phone or smart phone. Data for executing the payment process/payment are transmitted wirelessly preferably by means of Near Field Communication (NFC) transmission technology between the mobile terminal and the payment terminal and a receipt that references the paid for products is transmitted to the mobile terminal. The mobile terminal sends a query to a preferably central database using receipt information contained in the receipt and the database processes the query and provides an electronic voucher for a voucher product on the basis of the receipt information transmitted with the query. The electronic voucher is cashed preferably automatically upon payment for the voucher product.

No. of Pages : 17 No. of Claims : 16

(12) PATENT APPLICATION PUBLICATION
(19) INDIA
(22) Date of filing of Application :21/04/2014
(21) Application No.3163/DELNP/2014 A
(43) Publication Date : 22/05/2015

(54) Title of the invention : 2 CARBOXAMIDE CYCLOAMINO UREA DERIVATIVES FOR USE IN TREATING VEGF DEPENDENT DISEASES

(51) International classification :A61K31/427,A61K31/4439,A61P43/00
(31) Priority Document No :61/554606
(32) Priority Date :02/11/2011
(33) Name of priority country :U.S.A.
(86) International Application No :PCT/EP2012/071614
Filing Date :31/10/2012
(87) International Publication No :WO 2013/064567
(61) Patent of Addition to Application Number :NA
Filing Date :NA
(62) Divisional to Application Number :NA
Filing Date :NA

(71)**Name of Applicant :**
1)NOVARTIS AG
Address of Applicant :Lichtstrasse 35 CH 4056 Basel Switzerland
(72)**Name of Inventor :**
1)SCHNELL Christian Ren

(57) Abstract :
The invention relates to the use of compounds of formula (I) in the treatment of warm blooded animal target of VEGF driven angiogenic diseases methods of use of said compounds in the treatment of said diseases in a warm blooded animal especially a human pharmaceutical compositions comprising said compounds for the treatment of said diseases and said compounds for use in the treatment of said diseases.

No. of Pages : 27 No. of Claims : 11

(12) PATENT APPLICATION PUBLICATION
(19) INDIA
(22) Date of filing of Application :17/12/2014
(21) Application No.10811/DELNP/2014 A
(43) Publication Date : 22/05/2015

(54) Title of the invention : SINGLE DIRECT CURRENT ARC CHUTE AND BI DIRECTIONAL DIRECT CURRENT ELECTRICAL SWITCHING APPARATUS EMPLOYING THE SAME

(51) International classification :H01H9/44
(31) Priority Document No :13/603574
(32) Priority Date :05/09/2012
(33) Name of priority country :U.S.A.
(86) International Application No :PCT/US2013/049536
Filing Date :08/07/2013
(87) International Publication No :WO 2014/039162
(61) Patent of Addition to Application Number :NA
Filing Date :NA
(62) Divisional to Application Number :NA
Filing Date :NA

(71)**Name of Applicant :**
1)EATON CORPORATION
Address of Applicant :1000 Eaton Boulevard Cleveland Ohio 44122 U.S.A.
(72)**Name of Inventor :**
1)JUDS Mark A.
2)ZHOU Xin
3)KANK Amogh V.
4)ROLLMANN Paul J.
5)MUELLER Robert W.
6)BARTONEK Michael F.

(57) Abstract :
A direct current arc chute (200) includes a ferromagnetic base (202) having first and second ends (204 206); first and second ferromagnetic side members (208 210) disposed from the respective first and second ends; a third ferromagnetic member (212) disposed from the base intermediate the side members and having an end portion (214) opposite the base; and first and second magnets (216 218) on the respective first and second members have a magnetic polarity facing the third member. A first arc chamber (220) is between the first and third members; and a second arc chamber (224) is between the second and third members. The first magnet and first member extend away from the first end and beyond the end portion and toward the second magnet and second member after the end portion. The second magnet and second member extend away from the second end and beyond the end portion and toward the first magnet and first member after the end portion.

No. of Pages : 30 No. of Claims : 13

(12) PATENT APPLICATION PUBLICATION
(19) INDIA
(22) Date of filing of Application :07/01/2014
(21) Application No.116/DELNP/2014 A
(43) Publication Date : 22/05/2015

(54) Title of the invention : LAMINATED AND ION EXCHANGED STRENGTHENED GLASS LAMINATES AND THEIR MANUFACTURING METHOD

(51) International classification :C03B17/02,C03C21/00,C03B23/20
(31) Priority Document No :61/511422
(32) Priority Date :25/07/2011
(33) Name of priority country :U.S.A.
(86) International Application No :PCT/US2012/047515
Filing Date :20/07/2012
(87) International Publication No :WO 2013/016157
(61) Patent of Addition to Application Number :NA
Filing Date :NA
(62) Divisional to Application Number :NA
Filing Date :NA

(71)**Name of Applicant :**
1)CORNING INCORPORATED
Address of Applicant :1 Riverfront Plaza Corning New York 14831 U.S.A.
(72)**Name of Inventor :**
1)GALLAGHER Michael T
2)GULATI Suresh T
3)KICZENSKI Timothy J
4)SCHAUT Robert Anthony
5)VENKATARAMAN Natesan

(57) Abstract :
A method of making a glass sheet (10) comprises laminating a high CTE core glass (11) to a low CTE clad glass (12) at high temperatures and allowing the laminate (10) to cool creating compressive stress in the clad glass (12) and then ion exchanging the laminate (10) to increase the compressive stress in the outer near surface regions of the clad glass (12). The core glass (11) may include ions that exchange with ion in the clad glass (12) to increase the compressive stress in inner surface regions of the clad glass (12) adjacent to the clad glass/ core glass interfaces. The glass laminate (10) may be formed and laminated using a fusion forming and laminating process and fusion formable and ion exchangeable glass compositions.

No. of Pages : 40 No. of Claims : 26

(12) PATENT APPLICATION PUBLICATION
(21) Application No.162/DELNP/2014 A
(19) INDIA
(22) Date of filing of Application :08/01/2014
(43) Publication Date : 22/05/2015

(54) Title of the invention : IMPLEMENTING OSPF IN SPLIT ARCHITECTURE NETWORKS

(51) International classification :H04L12/56
(31) Priority Document No :13/208251
(32) Priority Date :11/08/2011
(33) Name of priority country :U.S.A.
(86) International Application No :PCT/IB2012/053833
Filing Date :26/07/2012
(87) International Publication No :WO 2013/021304
(61) Patent of Addition to Application Number :NA
Filing Date :NA
(62) Divisional to Application Number :NA
Filing Date :NA

(71)**Name of Applicant :**
1)TELEFONAKTIEBOLAGET L M ERICSSON (PUBL)
Address of Applicant :164 83 Stockholm Sweden
(72)**Name of Inventor :**
1)YEDAVALLI Kiran
2)BEHESHTI ZAVAREH Neda
3)ZHANG Ying

(57) Abstract :
A method is implemented in a network element that functions as one of a plurality of controllers for one of a plurality of areas of a split architecture network. The controller provides a control plane for the area of the split architecture network where the controller is remote from a plurality of switches providing a data plane for the area of split architecture network. The controller facilitates optimized routing across the plurality of areas of the split architecture network by providing limited intra area link cost data to other controllers of other areas of the split architecture network and to traditional routers of a network including the split architecture network. The limited intra area link cost data provides costs of each possible shortest path traversal of the area of the controller without providing all internal link cost data.

No. of Pages : 40 No. of Claims : 16

(12) PATENT APPLICATION PUBLICATION
(21) Application No.3171/DELNP/2014 A
(19) INDIA
(22) Date of filing of Application :21/04/2014
(43) Publication Date : 22/05/2015

(54) Title of the invention : EXCITATION DEVICE FOR A BRAKE SYSTEM COMPONENT OF A VEHICLE AND METHOD FOR EXCITING AT LEAST ONE BRAKE SYSTEM COMPONENT OF A VEHICLE

(51) International classification :B60T13/66
(31) Priority Document No :10 2011 088 350.9
(32) Priority Date :13/12/2011
(33) Name of priority country :Germany
(86) International Application No :PCT/EP2012/070360
Filing Date :15/10/2012
(87) International Publication No :WO 2013/087252
(61) Patent of Addition to Application Number :NA
Filing Date :NA
(62) Divisional to Application Number :NA
Filing Date :NA

(71)**Name of Applicant :**
1)ROBERT BOSCH GMBH
Address of Applicant :Postfach 30 02 20 70442 Stuttgart Germany
(72)**Name of Inventor :**
1)MAYER Jochen
2)RIETHMUELLER Joerg

(57) Abstract :
The invention relates to an excitation device (10) for a brake system component (28) of a vehicle having: a magnet (14) which can be arranged on a displaceable drive brake force transmission component (12) of a brake system such that it can also be displaced; an electrical conductor (16) in which a relative movement between the magnet (14) and the electrical conductor (16) effected when the magnet (14) arranged on the driver brake force transmission component (12) is also displaced can induce an induction voltage; and an output arrangement (18) by means of which the induction voltage or an excitation signal generated in consideration of the induction voltage can be output to the at least one brake system component (28) in such a manner that the at least one brake system component (28) can be controlled via the induction voltage or the excitation signal from a first energy consumption mode into a second energy consumption mode wherein the magnet (14) can be arranged by means of a transmission arrangement (20) on the displaceable driver brake force transmission component (12) in such a manner that it is also displaceable such that the co displacement causes the magnet (14) to make a rotational movement (22). The invention also relates to a method for exciting at least one brake system component (28) of a vehicle.

No. of Pages : 19 No. of Claims : 13

(12) PATENT APPLICATION PUBLICATION
(19) INDIA
(22) Date of filing of Application :13/01/2012
(21) Application No.125/DEL/2012 A
(43) Publication Date : 22/05/2015

(54) Title of the invention : SYSTEM AND METHOD FOR MAGNETIZATION OF RARE-EARTH PERMANENT MAGNETS

(51) International classification :H02J
(31) Priority Document No :13/007,382
(32) Priority Date :14/01/2011
(33) Name of priority country :U.S.A.
(86) International Application No :NA
Filing Date :NA
(87) International Publication No :NA
(61) Patent of Addition to Application Number :NA
Filing Date :NA
(62) Divisional to Application Number :NA
Filing Date :NA

(71)**Name of Applicant :**
1)GENERAL ELECTRIC COMPANY
Address of Applicant :1 RIVER ROAD, SCHENECTADY, NEW YORK 12345 U.S.A. U.S.A.
(72)**Name of Inventor :**
1)ROCHFORD JAMES HUMPHRIE
2)HARAN KIRUBA SIVASUBRAMANIAM
3)STAUTNER ERNST WOLFGANG

(57) Abstract :
The present disclosure is generally directed towards magnetization of permanent magnets (14) using superconducting magnetizers. For example, in one embodiment, a superconducting magnetizer assembly (18) is provided. The assembly includes a coil pack having an inner coil (44) including a first superconducting magnet material, the coil being configured to generate a first magnetic field in response to an electric current supplied to the coil, and an outer coil (42) including a second superconducting magnet material, the outer coil (42) being disposed about the inner coil (44) and being configured to generate a second magnetic field in response to an electric current supplied to the outer coil (42). The coil pack also includes a container configured to house the inner and the outer coils (42,44).

No. of Pages : 30 No. of Claims : 17

(12) PATENT APPLICATION PUBLICATION
(19) INDIA
(22) Date of filing of Application :07/01/2014
(21) Application No.125/DELNP/2014 A
(43) Publication Date : 22/05/2015

(54) Title of the invention : DISABLEMENT OF WIND TURBINES IN A WIND PARK

(51) International classification :F03D7/02,F03D7/04
(31) Priority Document No :PA 2011 70352
(32) Priority Date :30/06/2011
(33) Name of priority country :Denmark
(86) International Application No :PCT/DK2012/050219
Filing Date :29/06/2012
(87) International Publication No :WO 2013/000473
(61) Patent of Addition to Application Number :NA
Filing Date :NA
(62) Divisional to Application Number :NA
Filing Date :NA

(71)**Name of Applicant :**
1)VESTAS WIND SYSTEMS A/S
Address of Applicant :Hedeager 44 DK 8200 Aarhus N Denmark
(72)**Name of Inventor :**
1)KJ†R Martin Ansbjerg
2)THOMSEN Jesper Sandberg
3)BRATH Per
4)DALSGAARD S¸ren

(57) Abstract :
Embodiments of the invention generally relate to wind turbine generators and more specifically to the deactivation of wind turbines in a wind turbine park. A wind park controller may be configured to retrieve data indicating fatigue experienced by each wind turbine of the wind turbine park and deactivate those turbines determined to be the most fatigued thereby increasing the lifetime of turbines in the wind turbine park.

No. of Pages : 23 No. of Claims : 15

(12) PATENT APPLICATION PUBLICATION
(19) INDIA
(22) Date of filing of Application :07/01/2014
(21) Application No.134/DELNP/2014 A
(43) Publication Date : 22/05/2015

(54) Title of the invention : APPARATUS SYSTEM AND METHOD FOR DETECTING THE PRESENCE OF AN INTOXICATED DRIVER AND CONTROLLING THE OPERATION OF A VEHICLE

(51) International classification :H04L29/08
(31) Priority Document No :13/195691
(32) Priority Date :01/08/2011
(33) Name of priority country :U.S.A.
(86) International Application No :PCT/US2012/048785
Filing Date :30/07/2012
(87) International Publication No :WO 2013/019703
(61) Patent of Addition to Application Number :NA
Filing Date :NA
(62) Divisional to Application Number :NA
Filing Date :NA

(71)**Name of Applicant :**
1)HANNON Marwan
Address of Applicant :982 Junipero Serra Blvd. San Francisco CA 94132 U.S.A.
(72)**Name of Inventor :**
1)HANNON Marwan

(57) Abstract :
An apparatus system and method for detecting an intoxicated driver of a vehicle and preventing operation of the vehicle are presented. In one embodiment a detector module comprises a sensor that produces an electrical signal corresponding to a predetermined blood alcohol content of the driver. The blood alcohol content of the driver is determined by sampling the alcohol content of the air within a predetermined vehicle zone. A control module is coupled to the detector module to control at least one vehicle operations in response to the electrical signal from the detector module. In another embodiment a cell phone contains the detector module and is wirelessly coupled to the control module. A vehicle status module is included in some embodiments.

No. of Pages : 42 No. of Claims : 23

(12) PATENT APPLICATION PUBLICATION
(19) INDIA
(22) Date of filing of Application :08/01/2014
(21) Application No.168/DELNP/2014 A
(43) Publication Date : 22/05/2015

(54) Title of the invention : CONJUGATING AMINES

(51) International classification	:A61K31/01,A61K39/00,A61K47/06
(31) Priority Document No	:61/507054
(32) Priority Date	:12/07/2011
(33) Name of priority country	:U.S.A.
(86) International Application No	:PCT/US2012/046196
Filing Date	:11/07/2012
(87) International Publication No	:WO 2013/009826
(61) Patent of Addition to Application Number	:NA
Filing Date	:NA
(62) Divisional to Application Number	:NA
Filing Date	:NA

(71)**Name of Applicant :**
1)THE GENERAL HOSPITAL CORPORATION
Address of Applicant :55 Fruit Street Boston Massachusetts 02114 U.S.A.
2)INTERNATIONAL CENTRE FOR DIARRHOEAL DISEASE RESEARCH BANGLADESH
3)THE UNITED STATES OF AMERICA AS REPRESENTED BY THE SECRETARY DEPARTMENT OF HEALTH AND HUMAN SERVICES
(72)**Name of Inventor :**
1)RYAN Edward T.
2)KOVAC Pavol
3)QADRI Firdausi
4)XU Peng
5)CALDERWOOD Stephen B.
6)VANN Willie Frank
7)PETERSON Dwight Christopher

(57) Abstract :
The disclosure provides directly conjugated polysaccharide vaccine molecules and methods related thereto.

No. of Pages : 93 No. of Claims : 26

(12) PATENT APPLICATION PUBLICATION
(19) INDIA
(22) Date of filing of Application :21/04/2014
(21) Application No.3169/DELNP/2014 A
(43) Publication Date : 22/05/2015

(54) Title of the invention : SUSTAINED RELEASE PREPARATION

(51) International classification :A61K9/20,A61K31/4439
(31) Priority Document No :2011232302
(32) Priority Date :21/10/2011
(33) Name of priority country :Japan
(86) International Application No :PCT/JP2012/077662
Filing Date :19/10/2012
(87) International Publication No :WO 2013/058409
(61) Patent of Addition to Application Number :NA
Filing Date :NA
(62) Divisional to Application Number :NA
Filing Date :NA

(71)**Name of Applicant :**
1)TAKEDA PHARMACEUTICAL COMPANY LIMITED
Address of Applicant :1 1 Doshomachi 4 chome Chuo ku Osaka shi Osaka 5410045 Japan
(72)**Name of Inventor :**
1)TANOUE Yutaka
2)MURAKAWA Yusuke
3)ISHII Yumiko
4)TAKENAKA Kaoru

(57) Abstract :
Provided is a sustained release preparation containing pioglitazone or a salt thereof as an active ingredient and showing superior sustainability. A sustained release preparation containing pioglitazone or a salt thereof which shows a dissolution ratio of pioglitazone of average 25 58% at the 2 hour time point and average 60 100% at the 4 hour time point in a dissolution test according to the 50 rpm USP Paddle Method and using pH 2.0 KC1/HC1 buffer at 37°C as a test solution.

No. of Pages : 84 No. of Claims : 18

(12) PATENT APPLICATION PUBLICATION
(19) INDIA
(22) Date of filing of Application :21/04/2014
(21) Application No.3170/DELNP/2014 A
(43) Publication Date : 22/05/2015

(54) Title of the invention : ANTIFUNGAL CATHETER

(51) International classification :A61L29/16,A61L29/06,A61L29/08
(31) Priority Document No :61/568290
(32) Priority Date :08/12/2011
(33) Name of priority country :U.S.A.
(86) International Application No :PCT/US2012/068249
Filing Date :06/12/2012
(87) International Publication No :WO 2013/086195
(61) Patent of Addition to Application Number :NA
Filing Date :NA
(62) Divisional to Application Number :NA
Filing Date :NA

(71)**Name of Applicant :**
1)ROCHESTER MEDICAL CORPORATION
Address of Applicant :1500 Second Avenue NW Stewartville MN 55976 U.S.A.
(72)**Name of Inventor :**
1)CONWAY Anthony J.

(57) Abstract :
A sustained release antimicrobial cannula or catheter for residence within a portion of a human body through which aqueous biological fluids can pass. The antimicrobial cannula for catheter including a tube having an inner surface defining and interior lumen and an outer surface. The tube has a polymeric matrix and an antimicrobial agent residing within at least a portion of the polymeric matrix. The polymeric matrix includes cured silicon rubber and the antimicrobial agent is a finely divided nitrofuran compound a paraben antifungal or combinations thereof which is soluble in water and effective to prevent proliferation of certain microbes in an otherwise growth supporting aqueous environment when dissolved in the aqueous environment to the limit of its solubility therein at 37°C. The solubility of the antimicrobial agent is for example about 0.5% by weight or less at a pH of about 6 and a temperature of about 25°C. The antimicrobial agent can diffuse out of the polymeric matrix and into an aqueous biological environment when the polymeric matrix comes into contact with such an aqueous biological environment. In an embodiment at least a finite portion of the polymeric matrix proximate the outer surface includes an amount of from about 10 to about 60% by weight of the antimicrobial agent and the amount of the antimicrobial agent and the solubility thereof cooperate to provide a potential for a sustained release diffusion thereof for a period of not less than about three weeks during normal use of the cannula within the human body. Methods of making a sustained release antimicrobial cannula and of catheterizing a patient are also disclosed.

No. of Pages : 78 No. of Claims : 47

(12) PATENT APPLICATION PUBLICATION
(19) INDIA
(22) Date of filing of Application :08/01/2014
(21) Application No.149/DELNP/2014 A
(43) Publication Date : 22/05/2015

(54) Title of the invention : SAFETY SYRINGE

(51) International classification :A61M5/32,A61M5/34,A61M5/50
(31) Priority Document No :PI2011700110
(32) Priority Date :14/07/2011
(33) Name of priority country :Malaysia
(86) International Application No :PCT/MY2012/000202
Filing Date :11/07/2012
(87) International Publication No :WO 2013/009166
(61) Patent of Addition to Application Number :NA
Filing Date :NA
(62) Divisional to Application Number :NA
Filing Date :NA

(71)**Name of Applicant :**
1)UNIVERSITI PUTRA MALAYSIA
Address of Applicant :43400 Serdang Selangor Malaysia
(72)**Name of Inventor :**
1)SELIA TEK MEDICAL SDN.BHD
2)ABU.TALIB Abd. Rahim
3)BASRI Adi Azriff
4)MOHD. ZABIDI Siti Zuraifah
5)YAHAYA Mohd Salleh
6)MAT.ISA Khairi

(57) Abstract :
The present invention relates to a safety syringe (100) having a hollow barrel (1) plunger (2) and a detachable needle support (4) characterized in that the safety syringe (100) includes; a) a piston gasket (3) interference fit with the plunger head (7) of the plunger (2); b) a plurality of bone structures (6) provided at the barrel head (la) of the hollow barrel (1) to temporarily engage and support the needle support (4); c) a plurality of slots (8) longitudinally disposed at one substantial distal end of the needle support (4); and d) stoppers (5) provided at the barrel head (la); wherein a fluid is injected by a first stroke of the plunger (2) under normal load; and an additional load is applied to the plunger (2) to compress the piston gasket (3) so that the plunger head (7) of the plunger (2) travels further to break the bone structures (6) for subsequent retraction of the needle support (4) on a second stroke.

No. of Pages : 20 No. of Claims : 6

(12) PATENT APPLICATION PUBLICATION
(19) INDIA
(22) Date of filing of Application :08/01/2014
(21) Application No.163/DELNP/2014 A
(43) Publication Date : 22/05/2015

(54) Title of the invention : SIMPLIFIED SIGNALING FOR SMALL DATA TRANSMISSIONS

(51) International classification :H04L1/00,H04W4/00,H04W72/04
(31) Priority Document No :61/507516
(32) Priority Date :13/07/2011
(33) Name of priority country :U.S.A.
(86) International Application No :PCT/IB2012/053585
Filing Date :12/07/2012
(87) International Publication No :WO 2013/008208
(61) Patent of Addition to Application Number :NA
Filing Date :NA
(62) Divisional to Application Number :NA
Filing Date :NA

(71)**Name of Applicant :**
1)TELEFONAKTIEBOLAGET L M ERICSSON (PUBL)
Address of Applicant :S 164 83 Stockholm Sweden
(72)**Name of Inventor :**
1)DIACHINA John Walter
2)BERGSTR–M Andreas
3)SCHLIWA BERTLING Paul
4)VAMANAN Sudeep Manithara

(57) Abstract :
A simplified signaling procedure is provided for establishing and terminating connections for small dam transmissions (SDTs) by wireless devices. A wireless device may send an access request message to a serving wireless access node on a random access channel (RACH). The access request message includes an indication that the access is for a SDT. The access request message may also include the amount of data that will be transmitted as part of the SDT. The wireless access node may send an assignment message to immediately assign radio resources to the wireless device without further signaling needed for the SDT to begin. When the wireless device begins the SD T the first data block is coded and transmitted according to a first predetermined coding scheme. If there are any subsequent data blocks the wireless device includes an information element in the header of the first data block to indicate the coding scheme for the subsequent data blocks. The subsequent data blocks are coded and transmitted according to the second coding scheme.

No. of Pages : 44 No. of Claims : 40

(12) PATENT APPLICATION PUBLICATION
(19) INDIA
(22) Date of filing of Application :21/04/2014
(21) Application No.3175/DELNP/2014 A
(43) Publication Date : 22/05/2015

(54) Title of the invention : ELECTRONIC MARKETPLACE FOR HOSTED SERVICE IMAGES

(51) International classification :G06Q30/00
(31) Priority Document No :13/248227
(32) Priority Date :29/09/2011
(33) Name of priority country :U.S.A.
(86) International Application No :PCT/US2012/057626
Filing Date :27/09/2012
(87) International Publication No :WO 2013/049395
(61) Patent of Addition to Application Number :NA
Filing Date :NA
(62) Divisional to Application Number :NA
Filing Date :NA

(71)**Name of Applicant :**
1)AMAZON TECHNOLOGIES INC.
Address of Applicant :P.O. Box 8102 Reno NV 89507 U.S.A.
(72)**Name of Inventor :**
1)GOLDEN Manine R.
2)ZIPKIN David
3)THIMSEN John Daniel
4)TYRA Andrew S.
5)HANOLD Terrance D.

(57) Abstract :
Systems and methods are disclosed which facilitate providing a marketplace for acquisition of service images to be executed in a hosted computing environment. Service image providers submit service images for inclusion in the service image marketplace. Providers may further specify pricing and usage conditions associated with the service images. Customers browse and select service images for hosting on either the marketplace hosted computing environment or an alternate hosted computing environment. If necessary customers may submit payment information. The service image marketplace may monitor usage of hosted service images and bill customers according to use.

No. of Pages : 49 No. of Claims : 11

(12) PATENT APPLICATION PUBLICATION
(21) Application No.3176/DELNP/2014 A
(19) INDIA
(22) Date of filing of Application :21/04/2014
(43) Publication Date : 22/05/2015

(54) Title of the invention : SOLID DRUG DELIVERY APPARATUS FORMULATIONS AND METHODS OF USE

(51) International classification :A61M1/00
(31) Priority Document No :61/626909
(32) Priority Date :04/10/2011
(33) Name of priority country :U.S.A.
(86) International Application No :PCT/US2012/058813
Filing Date :04/10/2012
(87) International Publication No :WO 2013/052708
(61) Patent of Addition to Application Number :NA
Filing Date :NA
(62) Divisional to Application Number :NA
Filing Date :NA

(71)**Name of Applicant :**
1)INCUBE LABS LLC
Address of Applicant :2051 Ringwood Avenue San Jose CA 95131 U.S.A.
(72)**Name of Inventor :**
1)IMRAN Mir

(57) Abstract :
Embodiments provide apparatus and methods for delivering solid form medications such as pellets to various locations in the body. One embodiment provides an apparatus for in vivo delivery of medication pellets comprising a housing including a port a pellet containing belt disposed in the housing and a mechanism for transferring the pellets from the belt to a delivery site (DS) outside the housing. Each pellet contains a dose of drug to treat a medical condition. An elongate member is coupled to the housing and includes a lumen for pellet delivery a proximal end coupled to the port and a distal end positioned at the DS. The pellet can be delivered to the DS at regular intervals or responsive to a detected biological event. Embodiments of the invention are particularly useful for delivering medication to treat a medical condition over an extended period without requiring a patient to take external medication.

No. of Pages : 56 No. of Claims : 48

(12) PATENT APPLICATION PUBLICATION
(19) INDIA
(22) Date of filing of Application :21/04/2014
(21) Application No.3117/DELNP/2014 A
(43) Publication Date : 22/05/2015

(54) Title of the invention : A SYSTEM AND A METHOD FOR PURCHASING ELECTRONIC VOUCHERS

(51) International classification :G06Q30/02
(31) Priority Document No :PI2011004448
(32) Priority Date :20/09/2011
(33) Name of priority country :Malaysia
(86) International Application No :PCT/MY2012/000234
Filing Date :16/08/2012
(87) International Publication No :WO 2013/043038
(61) Patent of Addition to Application Number :NA
Filing Date :NA
(62) Divisional to Application Number :NA
Filing Date :NA

(71)**Name of Applicant :**
1)NUMONI PTE LTD
Address of Applicant :10 UBI Crescent #02 09 UBI Techpark (Lobby B) Singapore 408564 Singapore
(72)**Name of Inventor :**
1)TAN Seng Chuan
2)SIT Meng Lye

(57) Abstract :
A system for purchasing electronic vouchers is disclosed. The system comprises a plurality of kiosk terminals (100) for receiving payment made by the users of the system a group of servers (140 142) for coordinating a purchase transaction and an e voucher entity (180) for managing and supervising at least one voucher inventory (181 182 183). The kiosk terminals (100) are connected to the group of servers (140 142) in which the group of servers (140 142) establishes a connection with the e voucher entity (180). The users of the system use the kiosk terminals (100) to purchase the electronic voucher selectable from the voucher inventory (181 182 183) from the e voucher entity (180) which then sends the electronic voucher as purchased by the users to the users mobile devices (110) in the form of a text message or a picture message or both.

No. of Pages : 22 No. of Claims : 24

(12) PATENT APPLICATION PUBLICATION
(19) INDIA
(22) Date of filing of Application :21/04/2014
(21) Application No.3118/DELNP/2014 A
(43) Publication Date : 22/05/2015

(54) Title of the invention : A SYSTEM AND A METHOD FOR RECEIVING AND DISBURSING DONATION

(51) International classification :G06Q99/00,G06F17/00
(31) Priority Document No :PI2011004449
(32) Priority Date :20/09/2011
(33) Name of priority country :Malaysia
(86) International Application No :PCT/MY2012/000232
Filing Date :16/08/2012
(87) International Publication No :WO 2013/043037
(61) Patent of Addition to Application Number :NA
Filing Date :NA
(62) Divisional to Application Number :NA
Filing Date :NA

(71)**Name of Applicant :**
1)NUMONI PTE LTD
Address of Applicant :10 UBI Crescent #02 09 UBI Techpark (LOBBY B) Singapore 408564 Singapore
(72)**Name of Inventor :**
1)TAN Seng Chuan
2)SIT Meng Lye

(57) Abstract :
A system for facilitating the transaction of donation funds is disclosed. The system allows for the collection and disbursement of recurring donations. The system comprises a plurality of donors (110) at least one donation collecting institution (120) and a plurality of recipients (130). The plurality of donors (110) contribute donations to the donation collecting institution (120) in which the donations are gathered to form a pool of donation funds. The pool of donation funds is supervised and controlled by at least one global entity (125) which disburses and distributes the pool of donation funds to the plurality of recipients (130) via a plurality of kiosk terminals in the form of mobile airtime credit and mobile wallet points.

No. of Pages : 27 No. of Claims : 38

(12) PATENT APPLICATION PUBLICATION
(19) INDIA
(22) Date of filing of Application :21/04/2014
(21) Application No.3119/DELNP/2014 A
(43) Publication Date : 22/05/2015

(54) Title of the invention : FACILITY FOR TREATING THERMAL OILS IN SOLAR THERMAL PLANTS

(51) International classification :F03G6/06,F24J2/04,F24J2/46
(31) Priority Document No :NA
(32) Priority Date :NA
(33) Name of priority country :NA
(86) International Application No :PCT/ES2011/070712
Filing Date :14/10/2011
(87) International Publication No :WO 2013/053959
(61) Patent of Addition to Application Number :NA
Filing Date :NA
(62) Divisional to Application Number :NA
Filing Date :NA

(71)**Name of Applicant :**
1)LOGISTICA Y ACONDICIONAMIENTOS INDUSTRIALES S.A.U.
Address of Applicant :Edificio Sorolla Av. Cortes Valencianas 58 E 46015 Valencia Spain
(72)**Name of Inventor :**
1)LACALLE BAYO Jesºs

(57) Abstract :
The invention relates to a facility which includes an intake for connecting to an outlet circuit of the solar thermal plant; an oil-cooling device; a first decanting tank (4); a second decanting tank (7); a third tank (8), which serves as a flow-control tank, receiving oil that has been treated before said oil is fed back into the plant; a filtering unit (12) placed downstream of the second tank (7) and upstream of the third tank (8); a set of control valves; and a set. of inspection pressure gauges, thermometers and flowmeters placed at various points of the facility.

No. of Pages : 17 No. of Claims : 14

(12) PATENT APPLICATION PUBLICATION
(19) INDIA
(22) Date of filing of Application :22/04/2014
(21) Application No.3184/DELNP/2014 A
(43) Publication Date : 22/05/2015

(54) Title of the invention : METHOD AND APPARATUS FOR INCREASING THE RESOLUTION IN ADDITIVELY MANUFACTURED THREE DIMENSIONAL ARTICLES

(51) International classification :B29C67/00,B22F3/105
(31) Priority Document No :61/580768
(32) Priority Date :28/12/2011
(33) Name of priority country :U.S.A.
(86) International Application No :PCT/EP2012/074383
Filing Date :04/12/2012
(87) International Publication No :WO 2013/098050
(61) Patent of Addition to Application Number :NA
Filing Date :NA
(62) Divisional to Application Number :NA
Filing Date :NA

(71)**Name of Applicant :**
1)ARCAM AB
Address of Applicant :Kroksltts Fabriker 27A S 431 37 Mlndal Sweden
(72)**Name of Inventor :**
1)ACKELID Ulf

(57) Abstract :
A method for increasing the resolution when forming a three dimensional article through successive fusion of parts of a powder bed said method comprising providing a vacuum chamber providing an electron gun providing a first powder layer on a work table inside said vacuum chamber directing an electron beam from said electron gun over said work table causing the powder layer to fuse in selected locations to form a first cross section of said three dimensional article providing a second powder layer on said work table directing the electron beam over said work table causing said second powder layer to fuse in selected locations to form a second cross section of said three dimensional article reducing the pressure in the vacuum chamber from a first pressure level to a second pressure level between the providing of said first powder layer and said second powder layer.

No. of Pages : 40 No. of Claims : 14

(12) PATENT APPLICATION PUBLICATION
(21) Application No.2184/DELNP/2012 A
(19) INDIA
(22) Date of filing of Application :13/03/2012
(43) Publication Date : 22/05/2015

(54) Title of the invention : NUTRITIONAL COMPOSITIONS INCLUDING EXOGENOUS VITAMIN K2

(51) International classification :A61K 31/122
(31) Priority Document No :61/242,087
(32) Priority Date :14/09/2009
(33) Name of priority country :U.S.A.
(86) International Application No :PCT/US2010/047465
Filing Date :01/09/2010
(87) International Publication No :WO 2011/031601
(61) Patent of Addition to Application Number :NA
Filing Date :NA
(62) Divisional to Application Number :NA
Filing Date :NA

(71)**Name of Applicant :**
1)NESTEC S.A.
Address of Applicant :AVENUE NESTLE 55, CH-1800 VEVEY, SWITZERLAND
(72)**Name of Inventor :**
1)BOLSTER, DOUGLAS RICHARD
2)ROUGHEAD, ZAMZAM KABIRY

(57) Abstract :
Nutritional compositions and methods of making and using the nutritional compositions are provided. In a general embodiment, the present disclosure provides a nutritional composition including exogenous vitamin K2. The nutritional compositions may further include an additional component selected from the group consisting of phosphorus, magnesium, zinc, iron, copper, manganese, calcium, vitamin D, osteopontin and combinations thereof.

No. of Pages : 32 No. of Claims : 32

(12) PATENT APPLICATION PUBLICATION
(19) INDIA
(22) Date of filing of Application :22/04/2014
(21) Application No.3194/DELNP/2014 A
(43) Publication Date : 22/05/2015

(54) Title of the invention : METHOD FOR MONITORING DIAGNOSIS AND/OR PROGNOSIS OF ACUTE KIDNEY INJURY IN EARLY STAGE

(51) International classification	:G01N33/00,A61K38/00,C12Q1/00
(31) Priority Document No	:NA
(32) Priority Date	:NA
(33) Name of priority country	:NA
(86) International Application No	:PCT/IB2011/054187
Filing Date	:22/09/2011
(87) International Publication No	:WO 2013/041913
(61) Patent of Addition to Application Number	:NA
Filing Date	:NA
(62) Divisional to Application Number	:NA
Filing Date	:NA

(71)**Name of Applicant :**
1)UNIVERSIDAD DE LOS ANDES
Address of Applicant :San Carlos de Aporquindo 2200 Las Condes Santiago 91003910 Chile
(72)**Name of Inventor :**
1)IRARRAZABAL MU'OZ Carlos Ernesto

(57) Abstract :
The present invention relates to a method and a kit for monitoring diagnosis prognosis of acute kidney injury in early stage and determination of treatment in subjects suffering thereof. The method comprises the steps of a) providing a urine sample; b) enriching the urine sample in exosomes present in the urine sample using at least one step of immunopurification; c) detecting an acute kidney injury (AKI) marker in the exosome.

No. of Pages : 55 No. of Claims : 14

(12) PATENT APPLICATION PUBLICATION
(19) INDIA
(22) Date of filing of Application :22/04/2014
(21) Application No.3195/DELNP/2014 A
(43) Publication Date : 22/05/2015

(54) Title of the invention : SPRAYER FLUID SUPPLY WITH COLLAPSIBLE LINER

(51) International classification :B05B9/04,B05B7/02
(31) Priority Document No :61/552262
(32) Priority Date :27/10/2011
(33) Name of priority country :U.S.A.
(86) International Application No :PCT/US2012/061859
Filing Date :25/10/2012
(87) International Publication No :WO 2013/063231
(61) Patent of Addition to Application Number :NA
Filing Date :NA
(62) Divisional to Application Number :NA
Filing Date :NA

(71)**Name of Applicant :**
1)GRACO MINNESOTA INC.
Address of Applicant :88 11th Avenue NE Minneapolis Minnesota 55413 U.S.A.
(72)**Name of Inventor :**
1)SHULTZ Mark D.
2)HINES Bradley H.
3)WOJCIECHOWSKI Craig J.

(57) Abstract :
A fluid supply for a liquid sprayer includes a collapsible liner for holding the liquid; a cup for supporting the collapsible liner; a lid for connecting to the cup; and an air relief valve. The collapsible liner is secured relative to the lid and the cup. The lid includes an opening for connecting the lid to the pump.

No. of Pages : 22 No. of Claims : 32

(12) PATENT APPLICATION PUBLICATION
(19) INDIA
(22) Date of filing of Application :22/04/2014
(21) Application No.3196/DELNP/2014 A
(43) Publication Date : 22/05/2015

(54) Title of the invention : METHOD OF MOUNTING A TOILET BOWL ON A WALL AND MOUNTING KIT USED THEREFORE

(51) International classification :E03D11/14
(31) Priority Document No :2011/10592
(32) Priority Date :25/10/2011
(33) Name of priority country :Turkey
(86) International Application No :PCT/TR2012/000031
Filing Date :10/02/2012
(87) International Publication No :WO 2013/062493
(61) Patent of Addition to Application Number :NA
Filing Date :NA
(62) Divisional to Application Number :NA
Filing Date :NA

(71)**Name of Applicant :**
1)ECZACIBASI YAPI GERE‡LERI SANAYI VE TICARET ANONIM SIRKETI
Address of Applicant :B¼y¼kdere Cad. Ali Kaya Sok. No:7 Levent 34394 Istanbul Turkey
(72)**Name of Inventor :**
1)SARIG–L S¼leyman Vedat
2)TRK–Z Hatice
3)BALTACI Nihat
4)‡AKICI Ali Kamer
5)YCEL Turgut
6)IBIS Mustafa
7)‡I‡EK Seyhan
8)HOCAOGLU Recep
9)RN Osman

(57) Abstract :
The present invention relates to a method of mounting a toilet bowl on a wall and a mounting kit used therefore. The kit comprises a mounting system and an alien key (5). The mounting system comprises a rear connecting piece (3) that is first mounted to the bowl and then the bowl with the mounting system is slid on a stud bolt (4) mounted on the wall. The mounting system further comprises a clamping piece (1) with an alien screw (7) to fix the mounting system on the bolt whereby the alien screw (7) is operated through a hole (11) in the bowl. Furthermore the mounting system comprises a plurality of extension pieces (2) and a washer (8) mounted between the clamping piece (1) and the rear connecting piece (3) whereby the number of extension pieces (2) used depends on the distance (z) between where the rear connecting piece (3) is mounted to the bowl and the hole (11) in the bowl for the alien key to allow operating of the alien screw (7). This allows using of the kit with different bowls having different distances (z) between the hole in the bowl and where the rear connecting piece (3) is mounted.

No. of Pages : 18 No. of Claims : 8

(12) PATENT APPLICATION PUBLICATION
(19) INDIA
(22) Date of filing of Application :22/04/2014
(21) Application No.3197/DELNP/2014 A
(43) Publication Date : 22/05/2015

(54) Title of the invention : COMPOSITIONS AND METHODS FOR MOLECULAR IMAGING OF OXYGEN METABOLISM

(51) International classification :A61K9/10,G01N33/49,G01N15/06
(31) Priority Document No :61/537823
(32) Priority Date :22/09/2011
(33) Name of priority country :U.S.A.
(86) International Application No :PCT/US2012/056775
Filing Date :22/09/2012
(87) International Publication No :WO 2013/044186
(61) Patent of Addition to Application Number :NA
Filing Date :NA
(62) Divisional to Application Number :NA
Filing Date :NA

(71)**Name of Applicant :**
1)ROCKLAND TECHNIMED LTD.
Address of Applicant :One International Blvd Suite 400 Mahwah NJ 07495 0400 U.S.A.
(72)**Name of Inventor :**
1)GUPTE Pradeep M.
2)DE LAPAZ Robert Louis
3)RAVICHANDRAN Ramanathan

(57) Abstract :
Provided are compositions containing an emulsion containing a perfluorinated compound as well as methods for preparation of the compositions. Also provided are formulations containing a complex of oxygen 17 and the emulsion compositions. Additionally provided are methods for the preparation of the formulations as well as kits containing the formulations. Further provided are methods of use of the formulations in imaging of tissues using a magnetic resonance imaging system.

No. of Pages : 59 No. of Claims : 40

(12) PATENT APPLICATION PUBLICATION
(21) Application No.19/DELNP/2015 A
(19) INDIA
(22) Date of filing of Application :01/01/2015
(43) Publication Date : 22/05/2015

(54) Title of the invention : ULTRASONICALLY ENHANCED SEED GERMINATION SYSTEM

(51) International classification :A01G7/00
(31) Priority Document No :61/689298
(32) Priority Date :04/06/2012
(33) Name of priority country :U.S.A.
(86) International Application No :PCT/US2013/000167
Filing Date :19/07/2013
(87) International Publication No :WO 2013/184169
(61) Patent of Addition to Application Number :NA
Filing Date :NA
(62) Divisional to Application Number :NA
Filing Date :NA

(71)**Name of Applicant :**
1)REDDING Bruce K. Jr.
Address of Applicant :1 Kathryn Lane Broomall PA 19008 U.S.A.
(72)**Name of Inventor :**
1)REDDING Bruce K. Jr.

(57) Abstract :
The invention consists of a sonication and imbedding process for the uptake of water and/or other beneficial substances into a seed. The seed to be treated is immersed in water or other liquids. The seed is exposed to sound energy at frequencies between 15 kHz and 30 kHz for periods between about 1 and 20 minutes. The ultrasonic energy utilizes an alternating ultrasonic transmission where the first part of the transmission is a saw tooth wave form lasting 50 milliseconds followed by a square wave form lasting 50 milliseconds in the preferred embodiment but other variations of the alternating sonic wave form can be employed. Alternatively a sinusoidal ultrasonic transmission may be employed to generate cavitation forces by the adiabatic collapse of micro bubbles in the liquid medium particularly those bubbles that collapse at the surface of the seed. The ultrasonic cavitation forces impart micro punctures within the seed that enable to faster absorption of water and other liquid nutrients. The ultrasonically treated seeds are then dried and stored or may be used soon after ultrasonic treatment. Ultrasonic treatment tends to speed the germination of the seed and the growth rate of the resultant plant while maintaining the plant characteristics. Faster growing plants are more suitable for those environments where crop rotation and the growth of certain plant species are inhibited due to shorter growing seasons.

No. of Pages : 56 No. of Claims : 27

(12) PATENT APPLICATION PUBLICATION
(21) Application No.22/DELNP/2015 A
(19) INDIA
(22) Date of filing of Application :02/01/2015
(43) Publication Date : 22/05/2015

(54) Title of the invention : DEVICE AND METHOD FOR PRODUCING PACKAGED ARTICLE FOR ABSORBENT ARTICLE

(51) International classification	:A61F13/15,A61F13/472,A61F13/49
(31) Priority Document No	:2012176305
(32) Priority Date	:08/08/2012
(33) Name of priority country	:Japan
(86) International Application No	:PCT/JP2013/069891
Filing Date	:23/07/2013
(87) International Publication No	:WO 2014/024675
(61) Patent of Addition to Application Number	:NA
Filing Date	:NA
(62) Divisional to Application Number	:NA
Filing Date	:NA

(71)**Name of Applicant :**
1)UNICHARM CORPORATION
Address of Applicant :182 Kinseichoshimobun Shikokuchuo shi Ehime 7990111 Japan
(72)**Name of Inventor :**
1)YOSHIKAWA Taichi

(57) Abstract :
When packaging an absorbent article to produce a packaged article reducing the loss of raw materials caused by packaging devices by actuating a plurality of packaging devices equipped on a packaging line while synchronizing the packaging devices to a plurality of production devices equipped on a production line for absorbent articles. [Solution] Provided is a device for producing a packaged article in which an absorbent article is packaged. The present invention includes the following: a plurality of production devices for carrying out a process for producing the absorbent article by operating in synchronization with each other on the basis of a first synchronization signal; an encoder for outputting a second synchronization signal by being rotationally driven by a servomotor; and a plurality of packaging devices for carrying out a process for packaging the absorbent article by operating in synchronization with each other on the basis of the second synchronization signal. By positionally controlling the servomotor with the inputted first synchronization signal serving as a command position the encoder is caused to output as the second synchronization signal a signal such as a signal that synchronizes with the first synchronization signal.

No. of Pages : 67 No. of Claims : 8

(12) PATENT APPLICATION PUBLICATION
(21) Application No.3202/DELNP/2014 A
(19) INDIA
(22) Date of filing of Application :22/04/2014
(43) Publication Date : 22/05/2015

(54) Title of the invention : POWER CONNECTION CONTROL SYSTEM AND METHOD

(51) International classification :H02J3/38
(31) Priority Document No :2011209371
(32) Priority Date :26/09/2011
(33) Name of priority country :Japan
(86) International Application No :PCT/JP2012/074732
Filing Date :26/09/2012
(87) International Publication No :WO 2013/047595
(61) Patent of Addition to Application Number :NA
Filing Date :NA
(62) Divisional to Application Number :NA
Filing Date :NA

(71)**Name of Applicant :**
1)NEC CORPORATION
Address of Applicant :7 1 Shiba 5 chome Minato ku Tokyo 1088001 Japan
(72)**Name of Inventor :**
1)MOTOBAYASHI Toshihiko

(57) Abstract :
In the present invention a connection control apparatus is provided for each customer the connection control apparatus being provided with a switch for connecting or disconnecting a customer to an electric power grid and the connection control apparatus disconnecting the electric power grid and the customer through use of the switch in accordance with an instruction from a power outage management apparatus or the like during a power outage of the electric power grid and connecting the electric power grid and the customer through use of the switch in accordance with an instruction from the power outage management apparatus or the like when power is restored from the electric power grid. A power supply control apparatus supplies power to electric devices from an energy providing device during a power outage of the electric power grid.

No. of Pages : 37 No. of Claims : 19

(12) PATENT APPLICATION PUBLICATION
(19) INDIA
(22) Date of filing of Application :21/04/2014
(21) Application No.3130/DELNP/2014 A
(43) Publication Date : 22/05/2015

(54) Title of the invention : A METHOD FOR DETERMINING THREAT STATUS FOR COMBAT AIRCRAFTS

(51) International classification :F41G3/22,G05D1/10
(31) Priority Document No :NA
(32) Priority Date :NA
(33) Name of priority country :NA
(86) International Application No :PCT/SE2012/050168
Filing Date :16/02/2012
(87) International Publication No :WO 2013/122521
(61) Patent of Addition to Application Number :NA
Filing Date :NA
(62) Divisional to Application Number :NA
Filing Date :NA

(71)**Name of Applicant :**
1)SAAB AB
Address of Applicant :S 581 88 Linkping Sweden
(72)**Name of Inventor :**
1)LUNDQVIST Anders
2)KENSING Vibeke

(57) Abstract :
The invention relates to a method for decision support of a first combat aircraft (1) in a combat situation comprising the steps of: a) detecting (3) a second combat aircraft (2) wherein the second combat aircraft (2) is different from the first combat aircraft (1) b) analyzing (4) the second combat aircraft (2) to determine its type its sensor capacity and its total weapons capacity and c) recording (5) the sensor capacity and the total weapons capacity of the second combat aircraft (2) to determine a first geographic zone adapted for defining the detection limit of the second combat aircraft (2) and a second geographic zone adapted for defining a shoot down limit of the second combat aircraft (2) respectively wherein the first and the second geographic zone are adapted for decision support of the first combat aircraft (1) in the combat situation with the second combat aircraft (2). In this way a possibility is provided to assist the pilot in decision support in complicated combat situations while being reliable fast and easy to handle for the pilot in order to make a quick and efficient decision.

No. of Pages : 14 No. of Claims : 12

(12) PATENT APPLICATION PUBLICATION
(19) INDIA
(22) Date of filing of Application :21/04/2014
(21) Application No.3131/DELNP/2014 A
(43) Publication Date : 22/05/2015

(54) Title of the invention : ABSORBENT ARTICLE WITH DUAL CORE

(51) International classification :A61F13/472,A61F13/534,A61F13/535
(31) Priority Document No :61/557723
(32) Priority Date :09/11/2011
(33) Name of priority country :U.S.A.
(86) International Application No :PCT/US2012/064141
Filing Date :08/11/2012
(87) International Publication No :WO 2013/070909
(61) Patent of Addition to Application Number :NA
Filing Date :NA
(62) Divisional to Application Number :NA
Filing Date :NA

(71)**Name of Applicant :**
1)THE PROCTER & GAMBLE COMPANY
Address of Applicant :One Procter & Gamble Plaza Cincinnati Ohio 45202 U.S.A.
(72)**Name of Inventor :**
1)ROBLES Miguel Alvaro
2)LAVASH Bruce William
3)AGAMI Sion

(57) Abstract :
An absorbent article. The absorbent article includes a topsheet having a body contacting surface a backsheet joined to said topsheet and an absorbent core disposed between the topsheet and the backsheet wherein the absorbent core has an upper layer and a lower layer.

No. of Pages : 33 No. of Claims : 13

(12) PATENT APPLICATION PUBLICATION
(19) INDIA
(22) Date of filing of Application :21/04/2014
(21) Application No.3132/DELNP/2014 A
(43) Publication Date : 22/05/2015

(54) Title of the invention : CAPACITIVELY COUPLED FLAT CONDUCTOR CONNECTOR

(51) International classification :H01R24/38,H01R9/05
(31) Priority Document No :13/294586
(32) Priority Date :11/11/2011
(33) Name of priority country :U.S.A.
(86) International Application No :PCT/US2012/064573
Filing Date :10/11/2012
(87) International Publication No :WO 2013/071205
(61) Patent of Addition to Application Number :NA
Filing Date :NA
(62) Divisional to Application Number :NA
Filing Date :NA

(71)**Name of Applicant :**
1)ANDREW LLC
Address of Applicant :1100 CommScope Place SE Hickory North Carolina 28602 U.S.A.
(72)**Name of Inventor :**
1)VAN SWEARINGEN Kendrick
2)HARWATH Frank
3)PAYNTER Jeffrey
4)FLEMING James

(57) Abstract :
A capacitively coupled flat conductor connector is provided with a male connector body and a female connector body. An alignment insert is coupled to the male connector body the alignment insert dimensioned to support a predefined length of an inner conductor. An alignment receptacle is coupled to the female connector body the alignment receptacle dimensioned to receive a connector end of the alignment insert to seat an overlapping portion of an inner conductor and an inner conductor trace parallel with one another against opposite sides of a dielectric spacer. An outer conductor dielectric spacer which may be a ceramic coating isolates the contacting elements of the outer conductor signal path between the male and female connectors.

No. of Pages : 44 No. of Claims : 20

(12) PATENT APPLICATION PUBLICATION
(19) INDIA
(22) Date of filing of Application :21/04/2014
(21) Application No.3133/DELNP/2014 A
(43) Publication Date : 22/05/2015

(54) Title of the invention : SPUN DYED META TYPE FULLY AROMATIC POLYAMIDE FIBER

(51) International classification :D01F6/90
(31) Priority Document No :2011232996
(32) Priority Date :24/10/2011
(33) Name of priority country :Japan
(86) International Application No :PCT/JP2012/077188
Filing Date :22/10/2012
(87) International Publication No :WO 2013/061901
(61) Patent of Addition to Application Number :NA
Filing Date :NA
(62) Divisional to Application Number :NA
Filing Date :NA

(71)**Name of Applicant :**
1)TEIJIN LIMITED
Address of Applicant :6 7 Minamihommachi 1 chome Chuo ku Osaka shi Osaka 5410054 Japan
(72)**Name of Inventor :**
1)HAYASHI Kensaku
2)KIKUCHI Satoshi

(57) Abstract :
A spun dyed meta type aromatic polyamide fiber having low discoloration/fading when exposed to light wherein the amount of solvent remaining in the fiber is no greater than a set level. Specifically the amount of residual solvent in the fiber is no greater than 0.1 mass% with respect to the overall mass of the fiber.

No. of Pages : 37 No. of Claims : 5

(12) PATENT APPLICATION PUBLICATION
(19) INDIA
(22) Date of filing of Application :22/04/2014
(21) Application No.3206/DELNP/2014 A
(43) Publication Date : 22/05/2015

(54) Title of the invention : NOVEL OXAZINE DERIVATIVES AND THEIR USE IN THE TREATMENT OF DISEASE

(51) International classification :C07D413/04,C07D413/12,C07D413/14
(31) Priority Document No :61/546836
(32) Priority Date :13/10/2011
(33) Name of priority country :U.S.A.
(86) International Application No :PCT/IB2012/055521
Filing Date :11/10/2012
(87) International Publication No :WO 2013/054291
(61) Patent of Addition to Application Number :NA
Filing Date :NA
(62) Divisional to Application Number :NA
Filing Date :NA

(71)**Name of Applicant :**
1)NOVARTIS AG
Address of Applicant :Lichtstrasse 35 4056 Basel Switzerland
(72)**Name of Inventor :**
1)HURTH Konstanze
2)JACQUIER Sbastien
3)MACHAUER Rainer
4)RUEEGER Heinrich
5)TINTELNOT BLOMLEY Marina
6)VEENSTRA Siem Jacob
7)VOEGTLE Markus

(57) Abstract :
The invention relates to novel oxazine derivatives of formula (I) and pharmaceutically acceptable salts thereof in which all of the variables are as defined in the specification pharmaceutical compositions thereof combinations thereof and their use as medicaments particularly for the treatment of Alzheimer s Disease or diabetes via inhibition of BACE 1 or BACE 2.

No. of Pages : 87 No. of Claims : 20

(12) PATENT APPLICATION PUBLICATION
(21) Application No.3143/DELNP/2014 A
(19) INDIA
(22) Date of filing of Application :21/04/2014
(43) Publication Date : 22/05/2015

(54) Title of the invention : METHOD FOR THE SIMULTANEOUS ULTRASONIC CAVITATION TREATMENT OF LIQUID MEDIA OF DIFFERENT COMPOSITIONS

(51) International classification :B01F11/02,B01J19/10
(31) Priority Document No :2011135703
(32) Priority Date :29/08/2011
(33) Name of priority country :Russia
(86) International Application No :PCT/RU2011/000771
Filing Date :03/10/2011
(87) International Publication No :WO 2013/032358
(61) Patent of Addition to Application Number :NA
Filing Date :NA
(62) Divisional to Application Number :NA
Filing Date :NA

(71)**Name of Applicant :**
1)GETALOV Andrey Aleksandrovich
Address of Applicant :ul. Guryanova 4/2 129 Moscow 109548 Russia
2)DEDYUKHIN Evgeny Evgenevich
3)GINIYATULLIN Marat Munirovich
4)SIROTKIN Aleksandr Semenovich
(72)**Name of Inventor :**
1)GETALOV Andrey Aleksandrovich
2)DEDYUKHIN Evgeny Evgenevich
3)GINIYATULLIN Marat Munirovich
4)SIROTKIN Aleksandr Semenovich

(57) Abstract :
The present invention refers to the field of cavitation treatment of liquid medium as well as the medium having the density of water or other liquid body is more than 65-70% of total mass. Method of simultaneous ultrasonic cavitation treatment of liquid mediums having different compositions is what volumes of any kind are placed in the channel system with the liquid where the plain standing acoustic wave, passing the holding capacities, primary, in perpendicular position, is generated; the material of the holding capacities has the specific acoustic impedance equal to or similar to the specific acoustic impedance of the liquid filling the channel system and the impedance of the treated liquid medium;the amplitude of ultrasonic resonant vibrations exceeds the acoustic cavitation threshold for liquid mediums is being treated at the moment taking into account the transmission losses while passing the walls of holding capacity; the optimum temperature of liquid mediums treatment is given due to the liquid in the channel system, here the channel clearance h is taken divisible by quarter-wavelength, exited in the channel liquid: h = (k/4)(C/f),k= 1,2,3,... where f- frequencies of fundamental harmonic of standing wave of the channel wall, hz; C - acoustic velocity in the multiphase mediume, mps; h - channel clearance, m; The method allows simultaneously to conduct ultrasonic cavitation treatment of liquid mediums having contrasting compositions and at the same time to maintain the required temperature conditions.

No. of Pages : 13 No. of Claims : 1

(12) PATENT APPLICATION PUBLICATION
(19) INDIA
(22) Date of filing of Application :21/04/2014
(21) Application No.3146/DELNP/2014 A
(43) Publication Date : 22/05/2015

(54) Title of the invention : DEPTH ADAPTATION FOR MULTI VIEW SYSTEM

(51) International classification :H04N13/04
(31) Priority Document No :11186443.5
(32) Priority Date :25/10/2011
(33) Name of priority country :EPO
(86) International Application No :PCT/EP2012/070967
Filing Date :23/10/2012
(87) International Publication No :WO 2013/060677
(61) Patent of Addition to Application Number :NA
Filing Date :NA
(62) Divisional to Application Number :NA
Filing Date :NA

(71)**Name of Applicant :**
1)TELEFONAKTIEBOLAGET L M ERICSSON (PUBL)
Address of Applicant :SE 164 83 Stockholm Sweden
(72)**Name of Inventor :**
1)KAMPMANN Markus
2)GRAFULLA GONZ□LEZ Beatriz

(57) Abstract :
In a multi view autostereoscopic display system (100) a plurality of views (120 122 124 126) is displayed repeatedly within a plurality of adjacent viewing cones (107 111 113) where pairs of views among the plurality of views form stereoscopic view pairs. A first set of depth adaptation settings e.g. baseline and disparity and at least one further set of depth adaptation settings e.g. baseline and disparity are obtained the at least one further set of depth adaptation settings is different from the first set of depth adaptation settings. The first set of depth adaptation settings is then set for a first subset of views among the plurality of views in all viewing cones. The at least one further set of depth adaptation settings is set for at least one further respective subset of views among said plurality of views in all viewing cones.A simple solution is thereby provided of adapting the system to provide viewers/users with individually adapted depth adaptation settings and thereby providing an enhanced 3D viewing experience to a plurality of simultaneous viewers.

No. of Pages : 19 No. of Claims : 13

(12) PATENT APPLICATION PUBLICATION
(21) Application No.3211/DELNP/2014 A
(19) INDIA
(22) Date of filing of Application :22/04/2014
(43) Publication Date : 22/05/2015

(54) Title of the invention : HIGH STRENGTH HOT DIP GALVANIZED STEEL PLATE HAVING EXCELLENT MOLDABILITY WEAK MATERIAL ANISOTROPY AND ULTIMATE TENSILE STRENGTH OF 980 MPA OR MORE HIGH STRENGTH ALLOYED HOT DIP GALVANIZED STEEL PLATE AND MANUFACTURING METHOD THEREFOR

(51) International classification :C22C38/00,B21B3/00,C21D9/46
(31) Priority Document No :2011218040
(32) Priority Date :30/09/2011
(33) Name of priority country :Japan
(86) International Application No :PCT/JP2012/075214
Filing Date :28/09/2012
(87) International Publication No :WO 2013/047819
(61) Patent of Addition to Application Number :NA
Filing Date :NA
(62) Divisional to Application Number :NA
Filing Date :NA

(71)**Name of Applicant :**
1)NIPPON STEEL & SUMITOMO METAL CORPORATION
Address of Applicant :6 1 Marunouchi 2 chome Chiyoda ku Tokyo 1008071 Japan
(72)**Name of Inventor :**
1)AZUMA Masafumi
2)WAKABAYASHI Chisato
3)NOZAKI Takayuki
4)FUJITA Nobuhiro
5)TAKAHASHI Manabu

(57) Abstract :
Provided is a hot dip galvanized steel plate having a hot dip galvanized layer on the surface of a base material steel plate. The base material steel plate contains 0.1 to less than 0.40% C 0.5 to 3.0% Si 1.5 to 3.0% Mn by mass the quantity of O is limited to 0.006% or less quantity of P to 0.04% or less quantity of S to 0.01% or less quantity of Al to 2.0% or less and quantity of N to 0.01% or less by mass with the remainder consisting of iron and unavoidable impurities. The microstructure of the base material steel plate contains 40% or more ferrite 8 to less than 60% residual austenite in volume fraction with the remainder consisting of bainite or martensite. In a plate thickness range of 5/8 to 3/8 from the surface of the base material steel plate the polar density of specific crystal orientation is within a predetermined range. The hot dip galvanized layer contains less than 7% by mass Fe with the remainder consisting of Zn Al and unavoidable impurities. Thus the high strength hot dip galvanized steel plate of the invention has excellent moldability weak material anisotropy and an ultimate tensile strength of 980 MPa or more.

No. of Pages : 77 No. of Claims : 16

(12) PATENT APPLICATION PUBLICATION
(21) Application No.158/DELNP/2014 A
(19) INDIA
(22) Date of filing of Application :08/01/2014
(43) Publication Date : 22/05/2015

(54) Title of the invention : PROCESSES AND COMPOSITIONS FOR ORGANIC RANKINE CYCLES FOR GENERATING MECHANICAL ENERGY FROM HEAT

(51) International classification :F01B29/10
(31) Priority Document No :61/525531
(32) Priority Date :19/08/2011
(33) Name of priority country :U.S.A.
(86) International Application No :PCT/US2012/051239
Filing Date :16/08/2012
(87) International Publication No :WO 2013/028476
(61) Patent of Addition to Application Number :NA
Filing Date :NA
(62) Divisional to Application Number :NA
Filing Date :NA

(71)**Name of Applicant :**
1)E. I. DU PONT DE NEMOURS AND COMPANY
Address of Applicant :1007 Market Street Wilmington Delaware 19899 U.S.A.
(72)**Name of Inventor :**
1)KONTOMARIS Konstantinos

(57) Abstract :
Disclosed are compositions of novel working fluids uniquely designed for higher cycle efficiencies leading to higher overall system efficiencies. In particular these working fluids are useful in Organic Rankine Cycle systems for efficiently converting heat from any heat source into mechanical energy. The present invention also relates to novel processes for recovering heat from a heat source using ORC systems with a novel working fluid comprising at least about 20 weight percent cis 1 1 1 4 4 4 hexafluoro 2 butene (HFO 1336mzz Z) trans 1 1 1 4 4 4 hexafluoro 2 butene (HFO 1336mzz E) or mixtures thereof.

No. of Pages : 64 No. of Claims : 25

(12) PATENT APPLICATION PUBLICATION
(19) INDIA
(22) Date of filing of Application :21/04/2014
(21) Application No.3153/DELNP/2014 A
(43) Publication Date : 22/05/2015

(54) Title of the invention : RAPID CURE SILICONE LUBRICIOUS COATINGS

(51) International classification :C09D183/04,A61L27/34,A61L29/08
(31) Priority Document No :13/296771
(32) Priority Date :15/11/2011
(33) Name of priority country :U.S.A.
(86) International Application No :PCT/US2012/065182
Filing Date :15/11/2012
(87) International Publication No :WO 2013/074732
(61) Patent of Addition to Application Number :NA
Filing Date :NA
(62) Divisional to Application Number :NA
Filing Date :NA

(71)**Name of Applicant :**
1)ETHICON INC.
Address of Applicant :U.S. Route 22 Somerville New Jersey 08876 U.S.A.
(72)**Name of Inventor :**
1)OU Duan Li

(57) Abstract :
Novel lubricious coatings for medical devices are disclosed. The coatings provide improved lubricity and durability and are readily applied in coating processes. The present invention is also directed to a novel platinum catalyst for use in such coatings. The catalyst provides for rapid curing while inhibiting cross linking at ambient temperatures thereby improving the production pot life of the coatings.

No. of Pages : 48 No. of Claims : 71

(12) PATENT APPLICATION PUBLICATION
(19) INDIA
(22) Date of filing of Application :21/04/2014
(21) Application No.3154/DELNP/2014 A
(43) Publication Date : 22/05/2015

(54) Title of the invention : DRILL HAVING A COATING

(51) International classification :C23C14/06,C23C14/54,C23C16/50
(31) Priority Document No :10 2011 116 576.6
(32) Priority Date :21/10/2011
(33) Name of priority country :Germany
(86) International Application No :PCT/EP2012/004352
Filing Date :18/10/2012
(87) International Publication No :WO 2013/056831
(61) Patent of Addition to Application Number :NA
Filing Date :NA
(62) Divisional to Application Number :NA
Filing Date :NA

(71)**Name of Applicant :**
1)OERLIKON TRADING AG TRBBACH
Address of Applicant :Hauptstrasse 53 CH 9477 Tr¼bbach Switzerland
(72)**Name of Inventor :**
1)KRASSNITZER Siegfried

(57) Abstract :
The invention relates to a method for coating a substrate preferably a drill wherein at least one first HiPIMS layer is applied by means of a HiPIMS process. Preferably at least one second layer is applied to the first HiPIMS layer by means of a coating process that does not contain a HiPIMS process.

No. of Pages : 15 No. of Claims : 16

(12) PATENT APPLICATION PUBLICATION
(19) INDIA
(22) Date of filing of Application :21/04/2014
(21) Application No.3155/DELNP/2014 A
(43) Publication Date : 22/05/2015

(54) Title of the invention : MEGLUMINE SALT FORMULATIONS OF 1 (5 6 DICHLORO 1H BENZO[D]IMIDAZOL 2 YL) 1H PYRAZOLE 4 CARBOXYLIC ACID

(51) International classification :A61K31/4184,A61P3/10,C07D403/04
(31) Priority Document No :61/551395
(32) Priority Date :25/10/2011
(33) Name of priority country :U.S.A.
(86) International Application No :PCT/US2012/061847
Filing Date :25/10/2012
(87) International Publication No :WO 2013/063221
(61) Patent of Addition to Application Number :NA
Filing Date :NA
(62) Divisional to Application Number :NA
Filing Date :NA

(71)**Name of Applicant :**
1)JANSSEN PHARMACEUTICA NV
Address of Applicant :Turnhoutseweg 30 B 2340 Beerse Belgium
(72)**Name of Inventor :**
1)SEPASSI Kia
2)RIZZOLIO Michele C.

(57) Abstract :
The meglumine salt of 1 (5 6 dichloro 1H benzo[d]imidazol 2 yl) 1H pyrazole 4 carboxylic acid (compound (1)) and pharmaceutically acceptable formulations thereof are described. Such compounds may be used in pharmaceutical compositions and methods for the treatment of disease states disorders and conditions mediated by prolyl hydroxylase activity.

No. of Pages : 47 No. of Claims : 5

(12) PATENT APPLICATION PUBLICATION
(19) INDIA
(22) Date of filing of Application :21/04/2014
(21) Application No.3156/DELNP/2014 A
(43) Publication Date : 22/05/2015

(54) Title of the invention : DEVICE FOR POLISHING OPTICAL LENSES

(51) International classification :B24B13/00,B24B13/02,B24B13/06
(31) Priority Document No :1158600
(32) Priority Date :27/09/2011
(33) Name of priority country :France
(86) International Application No :PCT/FR2012/052108
Filing Date :21/09/2012
(87) International Publication No :WO 2013/045795
(61) Patent of Addition to Application Number :NA
Filing Date :NA
(62) Divisional to Application Number :NA
Filing Date :NA

(71)**Name of Applicant :**
1)VISIOPTIMUM INTERNATIONAL
Address of Applicant :73 rue Victor Puiseux ZI Btiment Le Magellan F 39000 Lons le Saunier France
(72)**Name of Inventor :**
1)MONNOYEUR Guy

(57) Abstract :
The invention relates to a device for polishing optical lenses including: a lens holder (4); a means for positioning said lens holder (4); and a means for rotating said lens holder (4) about an axis wherein said polishing device further includes: a polishing tool (3); a tool holder (3); a means for positioning said tool holder (3); and a means for rotating said tool holder (3) about an axis. Said device moreover includes a ball joint arranged between a shaft (9) secured to the tool holder (3) and the means for positioning said tool holder (3) or between a shaft (9) secured to the lens holder (4) and the means for positioning said lens holder (4) so as to enable a spherical movement of said tool (2) and of said lens. The invention also relates to a method for polishing using the device according to the invention.

No. of Pages : 14 No. of Claims : 14

(12) PATENT APPLICATION PUBLICATION
(19) INDIA
(22) Date of filing of Application :22/04/2014
(21) Application No.3225/DELNP/2014 A
(43) Publication Date : 22/05/2015

(54) Title of the invention : CONTROL OF WIND TURBINES

(51) International classification :F03D7/04
(31) Priority Document No :PA 2011 70539
(32) Priority Date :30/09/2011
(33) Name of priority country :Denmark
(86) International Application No :PCT/DK2012/050363
Filing Date :28/09/2012
(87) International Publication No :WO 2013/044925
(61) Patent of Addition to Application Number :NA
Filing Date :NA
(62) Divisional to Application Number :NA
Filing Date :NA

(71)**Name of Applicant :**
1)VESTAS WIND SYSTEMS A/S
Address of Applicant :Hedeager 44 DK 8200 Aarhus N Denmark
(72)**Name of Inventor :**
1)TURNER Judith
2)SPRUCE Chris
3)BOWYER Robert

(57) Abstract :
A wind turbine power plant comprises a plurality of wind turbines each having a rated output and under the control of a power plant controller. The power plant also has a rated output which may be over rated in response to one or more of electricity pricing data power plant age and operator demand. The power plant controller can send over rating demand signals to individual turbines. The controllers at the turbines include a fatigue life usage estimator which estimates a measure of the fatigue life consumed by key components of the turbine. If this measure exceeds a target value for any component over rating is prevented at that turbine.

No. of Pages : 37 No. of Claims : 41

(12) PATENT APPLICATION PUBLICATION
(21) Application No.3148/DELNP/2014 A
(19) INDIA
(22) Date of filing of Application :21/04/2014
(43) Publication Date : 22/05/2015

(54) Title of the invention : MECHANICALLY INTERLOCKING FRAME ASSEMBLIES

(51) International classification :F16B7/00,F16B7/18,F16B12/30
(31) Priority Document No :13/273988
(32) Priority Date :14/10/2011
(33) Name of priority country :U.S.A.
(86) International Application No:PCT/US2012/059531
Filing Date :10/10/2012
(87) International Publication No :WO 2013/055779
(61) Patent of Addition to Application Number :NA
Filing Date :NA
(62) Divisional to Application Number :NA
Filing Date :NA

(71)**Name of Applicant :**
1)BLANKING SYSTEMS INC.
Address of Applicant :450 9th Avenue Grafton WI 53024 U.S.A.
(72)**Name of Inventor :**
1)OETLINGER Frank E.

(57) Abstract :
A structural frame assembly is provided that includes mechanically interlocking components. The frame assembly has rails that interconnect with each other at joints that include brackets that engage the rails and nuts that are held in cavities of the rails that are connected to slots that extend through outer surfaces of the rails. Bolts may extend angularly through bores of the bracket and the slots of the rails to operatively engage a nut being held in the cavity. Tightening the bolts may draw the nut angularly through the cavity in a manner that automatically self aligns the brackets and rails to establish precise joints.

No. of Pages : 29 No. of Claims : 15

(12) PATENT APPLICATION PUBLICATION
(19) INDIA
(22) Date of filing of Application :21/04/2014
(21) Application No.3149/DELNP/2014 A
(43) Publication Date : 22/05/2015

(54) Title of the invention : IMPREGNATION MANDREL COMPRISING A VACUUM BAG FOR THE PRODUCTION OF A GAS TURBINE CASING FROM COMPOSITE MATERIAL

(51) International classification :B29C70/44,B29C33/30,F02C7/04
(31) Priority Document No :61/551544
(32) Priority Date :26/10/2011
(33) Name of priority country :U.S.A.
(86) International Application No :PCT/FR2012/052367
Filing Date :17/10/2012
(87) International Publication No :WO 2013/060966
(61) Patent of Addition to Application Number :NA
Filing Date :NA
(62) Divisional to Application Number :NA
Filing Date :NA

(71)**Name of Applicant :**
1)SNECMA
Address of Applicant :2 Boulevard du Gnral Martial Valin F 75015 Paris France
(72)**Name of Inventor :**
1)MATHON Richard
2)PATRIGEON Olivier
3)BETTEGA Louis

(57) Abstract :
The invention relates to an impregnation mandrel for the production of a gas turbine casing made from composite material comprising: a mandrel (100) having a central wall (102) and two side plates (104a 104b); compaction bars (106a 106b) each including (i) a wedge (108a 108b) intended to bear against the fibrous reinforcing part covering the angles formed between the central wall and the side plates of the mandrel and (ii) an attachment flange (110a 110b) intended to be attached to the corresponding side plate of the mandrel; a flexible casing (118) forming the vacuum bag and intended to be applied at least against the fibrous reinforcing part covering the central wall of the mandrel; and means (120 124) for injecting resin into a space (122) defined between the vacuum bag and the mandrel at one of the longitudinal ends of the fibrous reinforcement and for extracting same at the opposite end.

No. of Pages : 19 No. of Claims : 9

(12) PATENT APPLICATION PUBLICATION
(21) Application No.3223/DELNP/2014 A
(19) INDIA
(22) Date of filing of Application :22/04/2014
(43) Publication Date : 22/05/2015

(54) Title of the invention : WASTEWATER TREATMENT TANK WITHOUT MECHANICAL POWER AND WITHOUT ELECTRIC POWER SOURCE

(51) International classification :C02F3/00,B01D53/38,B01D53/81
(31) Priority Document No :2011229253
(32) Priority Date :29/09/2011
(33) Name of priority country :Japan
(86) International Application No :PCT/JP2012/057253
Filing Date :14/03/2012
(87) International Publication No :WO 2013/046756
(61) Patent of Addition to Application Number :NA
Filing Date :NA
(62) Divisional to Application Number :NA
Filing Date :NA

(71)**Name of Applicant :**
1)KANSAIKAKO CO. LTD
Address of Applicant :9 9 Hiroshibacho Suita shi Osaka 5640052 Japan
(72)**Name of Inventor :**
1)YOGO Syun
2)INOUE Masayuki

(57) Abstract :
Provided is a wastewater treatment tank that cleans and discharges human waste eliminated from toilets as well as miscellaneous wastewater eliminated from kitchens baths sinks and washing machines without using an air supply device that requires an electrical power source without mechanical power and without an electrical power source. The wastewater treatment tank has an anaerobic tank (2) and is provided with an inspection opening (11) for inspecting the same. Inside the anaerobic tank (2) is filled with typical large articles (3a) and small articles (3b) with a cylindrical doughnut shape made of a filter material with a reticular skeletal body and BOD in human waste and miscellaneous wastewater can be eliminated by anaerobic bacteria propagated in this filter material. In addition (3a) and (3b) which are typical of this filter material with a reticular skeletal body have a net like woven structure and this structure can trap and remove suspended solid substances contained in the human waste and miscellaneous wastewater.

No. of Pages : 18 No. of Claims : 6

(12) PATENT APPLICATION PUBLICATION
(21) Application No.3224/DELNP/2014 A
(19) INDIA
(22) Date of filing of Application :22/04/2014
(43) Publication Date : 22/05/2015

(54) Title of the invention : FUNCTIONALIZED NANOPARTICLES FOR INTRACELLULAR DELIVERY OF BIOLOGICALLY ACTIVE MOLECULES

(51) International classification :G01N33/53
(31) Priority Document No :61/550213
(32) Priority Date :21/10/2011
(33) Name of priority country :U.S.A.
(86) International Application No :PCT/US2012/061391
Filing Date :22/10/2012
(87) International Publication No :WO 2013/059831
(61) Patent of Addition to Application Number :NA
Filing Date :NA
(62) Divisional to Application Number :NA
Filing Date :NA

(71)**Name of Applicant :**
1)STEMGENICS INC
Address of Applicant :3131 Western Avenue Suite 526 Seattle Washington 98121 U.S.A.
(72)**Name of Inventor :**
1)APRIKYAN Andranik Andrew
2)DILL Kilian

(57) Abstract :
Functionalized biocompatible nanoparticles capable of penetrating through a mammalian cell membrane and delivering intracellularly a plurality of bioactive molecules for modulating a cellular function are disclosed herein The functionalized biocompatible nanoparticles comprise: a central nanoparticle ranging in size from about 5 to about 50 nm and having a polymer coating thereon a plurality of functional groups covalently attached to the polymer coating wherein the plurality of bioactive molecules are attached to the plurality of the functional groups and wherein the plurality of bioactive molecules include at least a peptide and a protein and wherein the peptide is capable of penetrating through the mammalian cell membrane and entering into the cell and wherein the protein is capable of providing a new functionality within the cell. The protein may be a transcription factor selected from the group consisting of Oct4 Sox2 Nanog Lin28 cMyc and Klf4.

No. of Pages : 28 No. of Claims : 14

(12) PATENT APPLICATION PUBLICATION
(21) Application No.13/DELNP/2015 A
(19) INDIA
(22) Date of filing of Application :01/01/2015
(43) Publication Date : 22/05/2015

(54) Title of the invention : PROCESS FOR PRODUCING A THERMOELECTRIC COMPONENT AND A THERMOELECTRIC COMPONENT

(51) International classification :H01L35/26,H01L35/34
(31) Priority Document No :10 2012 104 809.6
(32) Priority Date :04/06/2012
(33) Name of priority country :Germany
(86) International Application No :PCT/EP2013/061217
Filing Date :31/05/2013
(87) International Publication No :WO 2013/182479
(61) Patent of Addition to Application Number :NA
Filing Date :NA
(62) Divisional to Application Number :NA
Filing Date :NA

(71)**Name of Applicant :**
1)EMITEC GESELLSCHAFT FR EMISSIONSTECHNOLOGIE MBH
Address of Applicant :Hauptstrae 128 53797 Lohmar Germany
(72)**Name of Inventor :**
1)BRCK Rolf
2)LIMBECK Sigrid

(57) Abstract :
The invention is directed to a process for producing a thermoelectric component (1) and to a thermoelectric component (1). The thermoelectric component has at least one fibre (4) coated with thermoelectric material (3) wherein the thermoelectric component (1) has an annular configuration and the coated fibre (4) extends in a circumferential direction (9) over an angle range (10) of at least 120°.

No. of Pages : 17 No. of Claims : 6

(12) PATENT APPLICATION PUBLICATION
(19) INDIA
(22) Date of filing of Application :08/01/2014

(21) Application No.139/DELNP/2014 A
(43) Publication Date : 22/05/2015

(54) Title of the invention : DIFFUSER

(51) International classification :B01D11/02,B65G25/08,C13B10/10
(31) Priority Document No :2011/05569
(32) Priority Date :28/07/2011
(33) Name of priority country :South Africa
(86) International Application No :PCT/IB2012/053623
Filing Date :16/07/2012
(87) International Publication No :WO 2013/014571
(61) Patent of Addition to Application Number :NA
Filing Date :NA
(62) Divisional to Application Number :NA
Filing Date :NA

(71)**Name of Applicant :**
1)TONGAAT HULETT LIMITED
Address of Applicant :Amanzimnyama Hill 4400 Tongaat South Africa
(72)**Name of Inventor :**
1)JENSEN Craig
2)SMITH Leon

(57) Abstract :
A chain driven diffuser for use in a sugar extraction process the diffuser including a diffuser floor a plurality of chain ladder assemblies being displaceable relative to the diffuser floor with each chain Id der assembly comprising two opposing chains being driven by drive sprockets characterized in that at least some of the drive sprockets of the diffuser are driven independently from some of the other drive sprockets of the diffusor.

No. of Pages : 17 No. of Claims : 17

(12) PATENT APPLICATION PUBLICATION
(19) INDIA
(22) Date of filing of Application :02/03/2015
(21) Application No.1719/DELNP/2015 A
(43) Publication Date : 22/05/2015

(54) Title of the invention : PORTABLE TERMINAL DEVICE ON VEHICLE DEVICE AND ON VEHICLE SYSTEM

(51) International classification :G01C21/36,G06F3/033,G06F3/041
(31) Priority Document No :NA
(32) Priority Date :NA
(33) Name of priority country :NA
(86) International Application No :PCT/JP2012/073375
Filing Date :12/09/2012
(87) International Publication No :WO 2014/041646
(61) Patent of Addition to Application Number :NA
Filing Date :NA
(62) Divisional to Application Number :NA
Filing Date :NA

(71)**Name of Applicant :**
1)TOYOTA JIDOSHA KABUSHIKI KAISHA
Address of Applicant :1 Toyota cho Toyota shi Aichi 4718571 Japan
(72)**Name of Inventor :**
1)TSUNODA Seiichi
2)ISOGAI Daiki
3)KATO Yasutomo

(57) Abstract :
A portable terminal device (40) according to an example of the present invention includes a touch panel (3) and a control device (1) that causes the touch panel (3) when the touch panel (3) is placed at a predetermined position in a vehicle to function as a touch pad for operating an operation object displayed on a display device (6V). The touch panel (3) functions as a multi touch touch pad and the control device (1) changes an operation object according to the number of fingers with which a touch gesture was performed with respect to the touch panel (3). Examples of the operation object include a cursor a map image and a widget screen.

No. of Pages : 37 No. of Claims : 6

(12) PATENT APPLICATION PUBLICATION
(19) INDIA
(22) Date of filing of Application :21/04/2014
(21) Application No.3160/DELNP/2014 A
(43) Publication Date : 22/05/2015

(54) Title of the invention : CATALYST COMPOSITIONS COMPRISING A GRUBBS HOVEYDA TYPE COMPLEX AND A TERMINAL OLEFIN AND THEIR USE FOR HYDROGENATION OF NITRILE RUBBER

(51) International classification :B01J31/22,B01J31/02,C08C19/02
(31) Priority Document No :PCT/CN2011/001753
(32) Priority Date :21/10/2011
(33) Name of priority country :China
(86) International Application No :PCT/EP2012/070815
Filing Date :19/10/2012
(87) International Publication No :WO 2013/057289
(61) Patent of Addition to Application Number :NA
Filing Date :NA
(62) Divisional to Application Number :NA
Filing Date :NA

(71)**Name of Applicant :**
1)LANXESS DEUTSCHLAND GMBH
Address of Applicant :Kennedyplatz 1 50569 Kln Germany
(72)**Name of Inventor :**
1)OBRECHT Werner
2)DAVID Sarah
3)LIU Qingchun
4)WEI Zhenli

(57) Abstract :
This invention relates to novel catalyst compositions based on Ruthenium or Osmium based complex catalysts of the Grubbs Hoveyda Grela or Zhan type and specific co catalysts comprising at least one vinyl group pref. ethyl vinyl ether and to a process for selectively hydrogenating nitrile rubbers in the presence of such catalyst compositions preferably with a preceding metathesis step using the same complex catalyst as in the hydrogenation step.

No. of Pages : 110 No. of Claims : 13

(12) PATENT APPLICATION PUBLICATION
(21) Application No.3161/DELNP/2014 A
(19) INDIA
(22) Date of filing of Application :21/04/2014
(43) Publication Date : 22/05/2015

(54) Title of the invention : CATALYST COMPOSITIONS COMPRISING A RUTHENIUM OR OSMIUM CARBENE COMPLEX AND A TERMINAL OLEFIN AND THEIR USE FOR HYDROGENATION OF NITRILE RUBBER

(51) International classification	:B01J31/22,B01J31/18,B01J31/24
(31) Priority Document No	:PCT/CN2011/081095
(32) Priority Date	:21/10/2011
(33) Name of priority country	:China
(86) International Application No	:PCT/EP2012/070823
Filing Date	:19/10/2012
(87) International Publication No	:WO 2013/057295
(61) Patent of Addition to Application Number	:NA
Filing Date	:NA
(62) Divisional to Application Number	:NA
Filing Date	:NA

(71)**Name of Applicant :**
1)LANXESS DEUTSCHLAND GMBH
Address of Applicant :Kennedyplatz 1 50569 Kln Germany
(72)**Name of Inventor :**
1)OBRECHT Werner
2)DAVID Sarah
3)LIU Qingchun
4)WEI Zhenli

(57) Abstract :
This invention relates to novel catalyst compositions based on ruthenium or osmium carbene complex catalysts pref. of the Grubbs I II or III type or fluorenylidene analogues thereof and terminal olefins pref. enol ethers such as ethyl vinyl ether (EVE or VEE) as co catalysts and to a process for selectively hydrogenating nitrile rubbers in the presence of such catalyst compositions pref. with a preceding metathesis step using the same complex catalyst as in the hydrogenation step.

No. of Pages : 78 No. of Claims : 18

(12) PATENT APPLICATION PUBLICATION
(19) INDIA
(22) Date of filing of Application :23/04/2014
(21) Application No.3231/DELNP/2014 A
(43) Publication Date : 22/05/2015

(54) Title of the invention : TIRE TESTING DEVICE

(51) International classification :G01M17/02,B60C19/00,G01M1/14
(31) Priority Document No :2012032779
(32) Priority Date :17/02/2012
(33) Name of priority country :Japan
(86) International Application No :PCT/JP2012/082914
Filing Date :19/12/2012
(87) International Publication No :WO 2013/121675
(61) Patent of Addition to Application Number :NA
Filing Date :NA
(62) Divisional to Application Number :NA
Filing Date :NA

(71)**Name of Applicant :**
1)MITSUBISHI HEAVY INDUSTRIES MACHINERY TECHNOLOGY CORPORATION
Address of Applicant :6 22 Kan on Shin machi 4 chome Nishi ku Hiroshima shi Hiroshima 7338553 Japan
(72)**Name of Inventor :**
1)TACHIBANA Makoto
2)AGAWA Jiro
3)IMAMURA Morihiro
4)UEDA Tatsuya
5)MIYAMOTO Yoshinori

(57) Abstract :
This tire testing device enables attachment and detachment of a rim assembly formed by integrating a first rim and a second rim thereto and therefrom and tests a tire attached to the rim assembly. The tire testing device is provided with: a first attachment part which holds the first rim; a second attachment part which holds the second rim; a rotation part which rotates the first attachment part about a reference axis orthogonal to a first reference plane of the first rim attached to the first attachment part; a fixing part which is capable of fixing the first attachment part and the second attachment part to each other and releasing the fixation; an attachment movement part which adjusts the distance in the direction along the reference axis between the first attachment part and the second attachment part; and a rotation restriction part which restricts the rotation about the reference axis of the second attachment part.

No. of Pages : 55 No. of Claims : 4

(12) PATENT APPLICATION PUBLICATION
(19) INDIA
(22) Date of filing of Application :21/04/2014
(21) Application No.3164/DELNP/2014 A
(43) Publication Date : 22/05/2015

(54) Title of the invention : AN IMPROVED MOBILE AD HOC NETWORK

(51) International classification :H04W84/18,H04W72/02
(31) Priority Document No :216282
(32) Priority Date :10/11/2011
(33) Name of priority country :Israel
(86) International Application No :PCT/IL2012/050447
Filing Date :08/11/2012
(87) International Publication No :WO 2013/069015
(61) Patent of Addition to Application Number :NA
Filing Date :NA
(62) Divisional to Application Number :NA
Filing Date :NA

(71)**Name of Applicant :**
1)RAFAEL ADVANCED DEFENSE SYSTEMS LTD.
Address of Applicant :P.O.Box 2250 31021 Haifa Israel
(72)**Name of Inventor :**
1)WERMUTH Yoav
2)WERMUTH Michal
3)AVADIS Shimon
4)FUCHS Itzhak
5)WEISS Moshe

(57) Abstract :
A mobile communication system which consists of a plurality of MANETs and nodes which comprises a transceiver at each node. Each transceiver is a combination of a hopping transmitter operating according to a predetermined hopping sequence and rate and a wideband reference receiver that can simultaneously receive at once the whole operating band assigned to the system. Each transceiver further includes a circuitry for reallocating simultaneously receiving channels dynamically spread over a wideband frequency range and circuitry for determining transmission hopping patterns to use the least possible number of frequencies according to the active population status of nodes that belong to the plurality of MANETs. This circuitry is also used for adapting the transmission scheme of the alien transceivers by finding time slots in which a counterpart receiver at each remaining active node is not transmitting and a frequency channel in which no other active node neighboring the counterpart receiver transmits while determining proper transmission frequency for each transmitting node.

No. of Pages : 35 No. of Claims : 12

(12) PATENT APPLICATION PUBLICATION
(19) INDIA
(22) Date of filing of Application :21/04/2014
(21) Application No.3165/DELNP/2014 A
(43) Publication Date : 22/05/2015

(54) Title of the invention : LAMINATE BODY CROSS LINKED PRODUCT AND MOLDED MEMBER

(51) International classification :B32B25/00,C08K5/13,C08K5/19
(31) Priority Document No :2011209248
(32) Priority Date :26/09/2011
(33) Name of priority country :Japan
(86) International Application No :PCT/JP2012/071812
Filing Date :29/08/2012
(87) International Publication No :WO 2013/047058
(61) Patent of Addition to Application Number :NA
Filing Date :NA
(62) Divisional to Application Number :NA
Filing Date :NA

(71)**Name of Applicant :**
1)DENKI KAGAKU KOGYO KABUSHIKI KAISHA
Address of Applicant :1 1 Nihonbashi Muromachi 2 chome Chuo ku Tokyo 1038338 Japan
(72)**Name of Inventor :**
1)KAWASAKI Takashi
2)HAGIWARA Shogo
3)MIYAUCHI Toshiaki

(57) Abstract :
Provided are a laminate body having excellent interlayer adhesion a cross linked product and a molded member. An acrylic based elastomer layer (11) is formed by an acrylic based elastomer composition containing 1 5 parts by mass of an onium salt and 1 8 parts by mass of a polyol compound with respect to 100 parts by mass of the acrylic based elastomer and a fluorine based elastomer layer (12) is formed by a fluorine based elastomer composition containing a polyol cross linking agent. The acrylic based elastomer layer (11) and the fluorine based elastomer layer (12) are laminated to obtain a laminate body (1). The laminate body (1) is cross linked to obtain a cross linked product and a molded member.

No. of Pages : 45 No. of Claims : 6

(12) PATENT APPLICATION PUBLICATION
(19) INDIA
(22) Date of filing of Application :23/04/2014
(21) Application No.3234/DELNP/2014 A
(43) Publication Date : 22/05/2015

(54) Title of the invention : EXTRUDER

(51) International classification :B29C47/82,B29C47/08,B29C47/92
(31) Priority Document No :10 2011 114 576.5
(32) Priority Date :30/09/2011
(33) Name of priority country :Germany
(86) International Application No :PCT/EP2012/003948
Filing Date :21/09/2012
(87) International Publication No :WO 2013/045058
(61) Patent of Addition to Application Number :NA
Filing Date :NA
(62) Divisional to Application Number :NA
Filing Date :NA

(71)**Name of Applicant :**
1)THERMO ELECTRON (KARLSRUHE) GMBH
Address of Applicant :Dieselstrasse 4 76227 Karlsruhe Germany
(72)**Name of Inventor :**
1)ROBERTS Peter
2)WEBER Ralf

(57) Abstract :
The invention relates to an extruder (10) which has an extruder housing (11) in which a delivery channel (12) for a medium to be extruded is formed. At least one screw conveyor (13) is located in the delivery channel (12) and a cooling device (20) is provided for the extruder housing (11) said device having at least one cooling line (24 24a) in or on the extruder housing (11) through which line a cooling fluid (F) flows. An electronic device (18) for controlling and/or regulating the operating states of the extruder (10) is accommodated in an electronics housing (19) which can be cooled according to the invention by means of the cooling device (20) for the extruder housing (11).

No. of Pages : 14 No. of Claims : 7

(12) PATENT APPLICATION PUBLICATION
(19) INDIA
(22) Date of filing of Application :23/04/2014
(21) Application No.3237/DELNP/2014 A
(43) Publication Date : 22/05/2015

(54) Title of the invention : CRYSTALLINE AND NON CRYSTALLINE FORMS OF SGLT2 INHIBITORS

(51) International classification	:A61K31/7004,A61K31/7034,C07H7/04
(31) Priority Document No	:61/553776
(32) Priority Date	:31/10/2011
(33) Name of priority country	:U.S.A.
(86) International Application No	:PCT/IB2012/002852
Filing Date	:30/10/2012
(87) International Publication No	:WO 2013/064909
(61) Patent of Addition to Application Number	:NA
Filing Date	:NA
(62) Divisional to Application Number	:NA
Filing Date	:NA

(71)**Name of Applicant :**
1)SCINOPHARM TAIWAN LTD.
Address of Applicant :No.1 Nan Ke 8th Road Southern Taiwan Science Park Shan Hua 74144 Tainan Taiwan
(72)**Name of Inventor :**
1)HENSCHKE Julian Paul

(57) Abstract :
The present invention provides amorphous forms and the crystalline complexes of SGLT2 inhibitors as a novel material in particular in pharmaceutically acceptable form. The crystalline forms of SGLT2 inhibitor canagliflozin are designated as Forms CS1 CS2 CS3 CS4 and CS5.

No. of Pages : 46 No. of Claims : 17

(12) PATENT APPLICATION PUBLICATION
(19) INDIA
(22) Date of filing of Application :23/04/2014
(21) Application No.3238/DELNP/2014 A
(43) Publication Date : 22/05/2015

(54) Title of the invention : PROCESS FOR CABAZITAXEL AND INTERMEDIATES THEREOF

(51) International classification	:C07D409/14,C07D305/14,A61K31/337
(31) Priority Document No	:61/553751
(32) Priority Date	:31/10/2011
(33) Name of priority country	:U.S.A.
(86) International Application No	:PCT/IB2012/002846
Filing Date	:30/10/2012
(87) International Publication No	:WO 2013/072766
(61) Patent of Addition to Application Number	:NA
Filing Date	:NA
(62) Divisional to Application Number	:NA
Filing Date	:NA

(71)**Name of Applicant :**
1)SCINOPHARM TAIWAN LTD.
Address of Applicant :No.1 Nan Ke 8th Road Southern Taiwan Science Park Shan Hua Tainan 74144 Taiwan
(72)**Name of Inventor :**
1)HENSCHKE Julian Paul

(57) Abstract :
The present invention relates to processes for making cabazitaxel cabazitaxel analogues and intermediates thereof. The invention provides novel compounds useful in the synthesis of cabazitaxel.

No. of Pages : 69 No. of Claims : 29

(12) PATENT APPLICATION PUBLICATION
(21) Application No.3172/DELNP/2014 A
(19) INDIA
(22) Date of filing of Application :21/04/2014
(43) Publication Date : 22/05/2015

(54) Title of the invention : METHOD FOR LEARNING A MINIMUM ACTUATION DURATION OF INJECTION VALVES OF AN INTERNAL COMBUSTION ENGINE

(51) International classification :F02D41/22,F02D41/24
(31) Priority Document No :10 2011 087 961.7
(32) Priority Date :08/12/2011
(33) Name of priority country :Germany
(86) International Application No :PCT/EP2012/072492
Filing Date :13/11/2012
(87) International Publication No :WO 2013/083366
(61) Patent of Addition to Application Number :NA
Filing Date :NA
(62) Divisional to Application Number :NA
Filing Date :NA

(71)**Name of Applicant :**
1)ROBERT BOSCH GMBH
Address of Applicant :Postfach 30 02 20 70442 Stuttgart Germany
(72)**Name of Inventor :**
1)SCHULZ Udo
2)BAQASSE Brahim
3)HERNIER Markus
4)BEYRATH Thiebaut

(57) Abstract :
The invention relates to a method for learning and determining a minimum injector specific electric actuation duration for at least one injection valve of an internal combustion engine of a motor vehicle. Starting with a specified electric actuation duration which definitely does not lead to an injection the electric actuation durations are increased stepwise in each motor stopping process and/or in each motor starting process in successive stopping processes and/or in successive starting processes of the internal combustion engine up to an actuation duration with which an injection with a combustion occurs and then said actuation duration can be determined as the minimum electric actuation duration. The invention further relates to a corresponding device.

No. of Pages : 20 No. of Claims : 11

(12) PATENT APPLICATION PUBLICATION
(21) Application No.3173/DELNP/2014 A
(19) INDIA
(22) Date of filing of Application :21/04/2014
(43) Publication Date : 22/05/2015

(54) Title of the invention : METHOD FOR IMPROVING THE OBJECT DETECTION IN MULTICAMERA SYSTEMS

(51) International classification :G06T3/40,H04N7/18
(31) Priority Document No :10 2011 088 332.0
(32) Priority Date :13/12/2011
(33) Name of priority country :Germany
(86) International Application No :PCT/EP2012/072963
Filing Date :19/11/2012
(87) International Publication No :WO 2013/087362
(61) Patent of Addition to Application Number :NA
Filing Date :NA
(62) Divisional to Application Number :NA
Filing Date :NA

(71)**Name of Applicant :**
1)ROBERT BOSCH GMBH
Address of Applicant :Postfach 30 02 20 70442 Stuttgart Germany
(72)**Name of Inventor :**
1)EHLGEN Tobias
2)VEPA Leo

(57) Abstract :
The invention relates to a method for reproducing raised objects (68) which are in a critical region (78) or are moving toward the latter. The critical region (78) is situated at interfaces (52 54 56 58) assembled from visual ranges (30 34 38 42) that are captured by a plurality of individual cameras (28 32 36 40). The following method steps are performed: visual ranges (30 34 38 42) are captured using a respective individual camera (28 32 36 40) on a vehicle (10). Next the visual ranges (30 34 38 42) are assembled along interfaces (52 54 56 58) to form a transformed bird s eye view (24). Finally at least one interface (52 54 56 58) between adjoining visual ranges (30 34 38 42) is displaced upon detection of at least one raised object (68) that is situated within the critical region (78) at at least one interface (52 54 56 58) or that is moving toward the latter.

No. of Pages : 20 No. of Claims : 9

(12) PATENT APPLICATION PUBLICATION
(19) INDIA
(22) Date of filing of Application :23/04/2014
(21) Application No.3246/DELNP/2014 A
(43) Publication Date : 22/05/2015

(54) Title of the invention : DEVICES CONTAINING DRIED REAGENTS FOR RECONSTITUTION AS CALIBRATION AND/OR QUALITY CONTROL SOLUTIONS AND METHODS OF PRODUCTION AND USE THEREOF

(51) International classification :C12N9/96
(31) Priority Document No :61/562677
(32) Priority Date :22/11/2011
(33) Name of priority country :U.S.A.
(86) International Application No :PCT/US2012/065844
Filing Date :19/11/2012
(87) International Publication No :WO 2013/078130
(61) Patent of Addition to Application Number :NA
Filing Date :NA
(62) Divisional to Application Number :NA
Filing Date :NA

(71)**Name of Applicant :**
1)SIEMENS HEALTHCARE DIAGNOSTICS INC.
Address of Applicant :511 Benedict Ave. Tarrytown NY 10591 U.S.A.
(72)**Name of Inventor :**
1)SAMPRONI Jennifer A.

(57) Abstract :
Devices contain dried reagents that may be reconstituted and used in the calibration and quality control of sensors. Methods of producing and using the devices are also disclosed.

No. of Pages : 24 No. of Claims : 23

(12) PATENT APPLICATION PUBLICATION
(19) INDIA
(22) Date of filing of Application :23/04/2014
(21) Application No.3247/DELNP/2014 A
(43) Publication Date : 22/05/2015

(54) Title of the invention : DERMAL DELIVERY COMPOSITIONS AND METHODS

(51) International classification :A61K9/70,A61K47/10,A61K31/565
(31) Priority Document No :61/555546
(32) Priority Date :04/11/2011
(33) Name of priority country :U.S.A.
(86) International Application No :PCT/US2012/063314
Filing Date :02/11/2012
(87) International Publication No :WO 2013/067346
(61) Patent of Addition to Application Number :NA
Filing Date :NA
(62) Divisional to Application Number :NA
Filing Date :NA

(71)**Name of Applicant :**
1)AGILE THERAPEUTICS INC.
Address of Applicant :101 Poor Farm Road Princeton New Jersey 08540 U.S.A.
(72)**Name of Inventor :**
1)ARNOLD Charles G.
2)KYDONIEUS Agis
3)ROSSI Thomas M.
4)ALTOMARI Alfred F.

(57) Abstract :
A composition for transdermal delivery of a progestin for progestin hormone therapy is disclosed. Also disclosed is a transdermal delivery device comprising the composition. For progestin only hormone therapy the composition contains an anti oxidant and does not contain an estrogen. For therapy involving a progestin and an estrogen the composition contains the progestin the estrogen and an additional anti oxidant. Methods of improving the stability of progestin containing compositions comprising oxidative agents are also disclosed. The methods comprise including one or more anti oxidants in the compositions.

No. of Pages : 29 No. of Claims : 52

(12) PATENT APPLICATION PUBLICATION
(21) Application No.3248/DELNP/2014 A
(19) INDIA
(22) Date of filing of Application :23/04/2014
(43) Publication Date : 22/05/2015

(54) Title of the invention : INTERDIGITATED ARRAY AND METHOD OF MANUFACTURE

(51) International classification :G01N27/26
(31) Priority Document No :61/562645
(32) Priority Date :22/11/2011
(33) Name of priority country :U.S.A.
(86) International Application No :PCT/US2012/065834
Filing Date :19/11/2012
(87) International Publication No :WO 2013/078127
(61) Patent of Addition to Application Number :NA
Filing Date :NA
(62) Divisional to Application Number :NA
Filing Date :NA

(71)**Name of Applicant :**
1)SIEMENS HEALTHCARE DIAGNOSTICS INC.
Address of Applicant :511 Benedict Ave. Tarrytown NY 10591 U.S.A.
(72)**Name of Inventor :**
1)SAMPRONI Jennifer A.

(57) Abstract :
An automated feed manufacturing product is disclosed. The automated feed manufacturing product is provided with a flexible substrate having a plurality of card zones with the card zones defining sensing areas with sensor units formed within the sensing areas. The sensor units have a first electrode having first fingers and a second electrode having second fingers and with the first fingers interleaved with the second fingers and with the first fingers spaced away from the second fingers. The sensor units also comprising biomolecule receptors on the flexible web between the first electrode and the second electrode such that a physical property of the first electrode relative to the second electrode is effected upon one or more of the biomolecule receptors binding to a biomolecule. The automated feed manufacturing product can be formed as a continuous web or discrete sheets formed using a sheet feeder that picks up and processes the discrete sheets.

No. of Pages : 26 No. of Claims : 23

(12) PATENT APPLICATION PUBLICATION
(21) Application No.17/DELNP/2015 A
(19) INDIA
(22) Date of filing of Application :01/01/2015
(43) Publication Date : 22/05/2015

(54) Title of the invention : ENGINEERED THREE DIMENSIONAL CONNECTIVE TISSUE CONSTRUCTS AND METHODS OF MAKING THE SAME

(51) International classification :A61L27/56,A61L27/38,C12N5/07
(31) Priority Document No :61/661768
(32) Priority Date :19/06/2012
(33) Name of priority country :U.S.A.
(86) International Application No :PCT/US2013/046519
Filing Date :19/06/2013
(87) International Publication No :WO 2013/192290
(61) Patent of Addition to Application Number :NA
Filing Date :NA
(62) Divisional to Application Number :NA
Filing Date :NA

(71)**Name of Applicant :**
1)ORGANOVO INC.
Address of Applicant :6275 Nancy Ridge Drive Suite 110 San Diego CA 92121 U.S.A.
(72)**Name of Inventor :**
1)SHEPHERD Benjamin R.
2)PRESNELL Sharon C.
3)EVINGER Albert J.

(57) Abstract :
Disclosed are engineered, living, three-dimensional connective tissue constructs comprising tissue cells. In some are potent as some embodiments, the cells are cohered to one another. In some embodiments, the multi-potent cells have been exposed to one or more differentiation signals to provide a living, three-dimensional connective tissue construct. In some embodiments, the constructs are substantially free of pre-formed scaffold at the time of use. Also disclosed are implants for engraftment, arrays of connective tis - sue constructs for in vitro experimentation, as well as methods of making the same.

No. of Pages : 60 No. of Claims : 56

(12) PATENT APPLICATION PUBLICATION
(19) INDIA
(22) Date of filing of Application :08/01/2014

(21) Application No.170/DELNP/2014 A
(43) Publication Date : 22/05/2015

(54) Title of the invention : ABSORBENT ARTICLE

(51) International classification :A61F13/74,A61F13/62,A41B9/14
(31) Priority Document No :201110189269.5
(32) Priority Date :01/07/2011
(33) Name of priority country :China
(86) International Application No :PCT/SE2012/050742
Filing Date :29/06/2012
(87) International Publication No :WO 2013/006130
(61) Patent of Addition to Application Number :NA
Filing Date :NA
(62) Divisional to Application Number :NA
Filing Date :NA

(71)**Name of Applicant :**
1)SCA HYGIENE PRODUCTS AB
Address of Applicant :S 405 03 Gteborg Sweden
(72)**Name of Inventor :**
1)R–NNBERG Peter
2)STRANNEMALM Kenneth

(57) Abstract :
An absorbent article comprising a separate belt intended to be placed around the waist of the wearer and an absorbent pad detachably attached to the belt and held by the belt when the article is used wherein the pad comprises a chassis having a liquid permeable topsheet a liquid impermeable backsheet and an absorbent core between the topsheet and the backsheet wherein the absorbent pad includes a front portion a rear portion and a crotch portion there between in the longitudinal direction and wherein the absorbent pad at each of its longitudinal ends is detachably attached to a surface of the belt oriented away from wearer using attaching arrangements provided on each corner of the front portion and the rear portion of the pad wherein at least one of the front and rear portion is provided with a waist elastic arranged symmetrically on each side of the longitudinal center line and extending between the attaching elements in the transverse direction of the pad wherein the waist elastic is provided at the waist portion of at least one of the front and rear portion and is movable between a contracted condition in which the topsheet and/or backsheet exhibit(s) pleats and a fully stretched condition in which the pleats of the topsheet and/or backsheet are fully stretched out wherein the elastic force from said waist elastic is within the range of from 2 N to 7 N when the elastic is in the fully stretched condition.

No. of Pages : 24 No. of Claims : 11

(12) PATENT APPLICATION PUBLICATION
(19) INDIA
(22) Date of filing of Application :27/02/2012
(21) Application No.1748/DELNP/2012 A
(43) Publication Date : 22/05/2015

(54) Title of the invention : NEW FOAMED TEA BEVERAGE AND PROCESS OF PREPARATION

(51) International classification :A23F 3/30
(31) Priority Document No :09169923.1
(32) Priority Date :10/09/2009
(33) Name of priority country :EPO
(86) International Application No :PCT/EP2010/063241
Filing Date :09/09/2010
(87) International Publication No :WO 2011/029873
(61) Patent of Addition to Application Number :NA
Filing Date :NA
(62) Divisional to Application Number :NA
Filing Date :NA

(71)**Name of Applicant :**
1)NESTEC S.A.
Address of Applicant :AVENUE NESTLE 55, CH-1800 VEVEY, SWITZERLAND
(72)**Name of Inventor :**
1)SEID, ECKHARD
2)PACAULT, JEAN

(57) Abstract :
The invention concerns a foamed tea beverage composed of: a mixture of liquid and bubbles, a foam head above the mixture of liquid and bubbles, characterized in that the beverage is deprived of any creamer, lipid or thickener agent, and in that the said beverage is generated from the combination of water, a powdered tea composition comprising a tea extract powder, and a food-grade acid.

No. of Pages : 12 No. of Claims : 19

(12) PATENT APPLICATION PUBLICATION
(21) Application No.2625/DELNP/2012 A
(19) INDIA
(22) Date of filing of Application :26/03/2012
(43) Publication Date : 22/05/2015

(54) Title of the invention : METHODS FOR ENHANCING ANIMAL DIGEST PALATABILITY

(51) International classification :A23K 1/00
(31) Priority Document No :61/278,758
(32) Priority Date :09/10/2009
(33) Name of priority country :U.S.A.
(86) International Application No :PCT/US2010/002723
Filing Date :08/10/2010
(87) International Publication No :WO 2011/043828
(61) Patent of Addition to Application Number :NA
Filing Date :NA
(62) Divisional to Application Number :NA
Filing Date :NA

(71)**Name of Applicant :**
1)NESTEC S.A.
Address of Applicant :AVENUE NESTLE, CH-1800 VEVEY, SWITZERLAND
(72)**Name of Inventor :**
1)CHIANG, WEN

(57) Abstract :
The invention provides methods for enhancing the palatability of animal digests by adding anti-gelling agents to animal digests while adjusting the pH to a pH optimal for proteases used to hydrolyze viscera proteins. The anti-gelling agents maximize the production of viscera protein hydrolysates that can participate in Maillard reactions and increase palatability of the animal digest.

No. of Pages : 24 No. of Claims : 32

(12) PATENT APPLICATION PUBLICATION
(19) INDIA
(22) Date of filing of Application :23/04/2014
(21) Application No.3250/DELNP/2014 A
(43) Publication Date : 22/05/2015

(54) Title of the invention : ALL STEEL FABRIC RADIAL CONSTRUCTION FOR AGRICULTURAL TIRES

(51) International classification :B60C9/18,B60C15/05,B60C15/06
(31) Priority Document No :13/278938
(32) Priority Date :21/10/2011
(33) Name of priority country :U.S.A.
(86) International Application No :PCT/US2012/056352
Filing Date :20/09/2012
(87) International Publication No :WO 2013/058927
(61) Patent of Addition to Application Number :NA
Filing Date :NA
(62) Divisional to Application Number :NA
Filing Date :NA

(71)**Name of Applicant :**
1)BRIDGESTONE AMERICAS TIRE OPERATIONS LLC
Address of Applicant :535 Marriott Drive Nashville TN 37214 U.S.A.
(72)**Name of Inventor :**
1)BUXTON Todd
2)HARRIS Bradley
3)SWARTZWELDER Christopher
4)SHIMIZU Nobuo

(57) Abstract :
A pneumatic tire for agricultural or forestry equipment includes a tread a pair of sidewalls and a pair of bead portions including a bead core and a bead filler. A steel reinforced radial carcass extends from one bead portion to the other. The carcass includes an axially inner portion and outer turn up portions that extend around the bead portions and terminate at turn up ends. First and second steel reinforced belts are disposed between the carcass ply and the tread. Each belt has a pair of axial ends separated by belt wedges. The tire includes a pair of sidewall inserts that extend continuously from an upper end extending between the first belt and the carcass to a lower end between the inner portion of the carcass and one of the turn up portions. A tie gum layer binds an innerliner to the carcass.

No. of Pages : 26 No. of Claims : 20

(12) PATENT APPLICATION PUBLICATION
(19) INDIA
(22) Date of filing of Application :22/04/2014
(21) Application No.3181/DELNP/2014 A
(43) Publication Date : 22/05/2015

(54) Title of the invention : OPTICAL READABLE CODE SUPPORT AND CAPSULE FOR PREPARING A BEVERAGE HAVING SUCH CODE SUPPORT PROVIDING AN ENHANCED READABLE OPTICAL SIGNAL

(51) International classification :A47J31/44
(31) Priority Document No :11189232.9
(32) Priority Date :15/11/2011
(33) Name of priority country :EPO
(86) International Application No :PCT/EP2012/072088
Filing Date :08/11/2012
(87) International Publication No :WO 2013/072239
(61) Patent of Addition to Application Number :NA
Filing Date :NA
(62) Divisional to Application Number :NA
Filing Date :NA

(71)**Name of Applicant :**
1)NESTEC S.A.
Address of Applicant :Av. Nestl 55 CH 1800 Vevey Switzerland
(72)**Name of Inventor :**
1)MAGRI Carlo
2)GERBAULET Arnaud
3)PERENTES Alexandre
4)JARISCH Christian
5)KAESER Stefan
6)BENZ Patrik
7)ABEGGLEN Daniel

(57) Abstract :
An optically readable code support (30) to be associated with or be part of a capsule indented for delivering a beverage in a beverage producing device by centrifugation of the capsule the support comprising at least one sequence of binary symbols represented on the support so that each symbol is sequentially readable by a reading arrangement of an external reading device while the capsule is driven in rotation along an axis of rotation wherein the binary symbols are essentially formed of light reflective surfaces (400 403) and light absorbing surfaces (410 414). The code support preferably comprises a base structure (500) extending continuously at least along said sequence of symbols and discontinuous discrete light absorbing portions (528) locally applied onto or formed at the surface of said base structure; wherein the discontinuous discrete light absorbing portions form the light absorbing surfaces and the base structure (500) forms the light reflective surfaces (400 403) outside the surface areas occupied by the discrete light absorbing portions; said discrete light absorbing portions (410 414) are arranged to provide a lower light reflectivity than the one of the base structure outside the surface areas occupied by the discrete light absorbing portions.

No. of Pages : 36 No. of Claims : 15

(12) PATENT APPLICATION PUBLICATION
(21) Application No.3182/DELNP/2014 A
(19) INDIA
(22) Date of filing of Application :22/04/2014
(43) Publication Date : 22/05/2015

(54) Title of the invention : SUPPORT AND CAPSULE FOR PREPARING A BEVERAGE BY CENTRIFUGATION SYSTEM AND METHOD FOR PREPARING A BEVERAGE BY CENTRIFUGATION

(51) International classification :G06K19/06,A47J31/44
(31) Priority Document No :11189235.2
(32) Priority Date :15/11/2011
(33) Name of priority country :EPO
(86) International Application No :PCT/EP2012/072461
Filing Date :13/11/2012
(87) International Publication No :WO 2013/072297
(61) Patent of Addition to Application Number :NA
Filing Date :NA
(62) Divisional to Application Number :NA
Filing Date :NA

(71)**Name of Applicant :**
1)NESTEC S.A.
Address of Applicant :Av. Nestl 55 CH 1800 Vevey Switzerland
(72)**Name of Inventor :**
1)JARISCH Christian
2)KAESER Stefan
3)GERBAULET Arnaud

(57) Abstract :
The invention relates to an optically readable code support to be associated with or part of a capsule indented for delivering a beverage in a beverage producing device by centrifugation of the capsule. The support comprises at least one sequence of symbols represented on the support so that each symbol is sequentially readable by a reading arrangement of an external reading device while the capsule is driven in rotation along an axis of rotation. The symbols are at least partly formed of surfaces arranged to reflect mainly diffusively in any direction forming an angle comprised between 3° and 10° with respect to a normal of said surface any incoming beam of light with an incoming direction forming an angle comprise between 0 and 10° with respect to a normal of said surface.

No. of Pages : 45 No. of Claims : 21

(12) PATENT APPLICATION PUBLICATION
(19) INDIA
(22) Date of filing of Application :22/04/2014
(21) Application No.3183/DELNP/2014 A
(43) Publication Date : 22/05/2015

(54) Title of the invention : EMULSION STABILISATION

(51) International classification :A23L1/035,A23G1/00,A23G3/00
(31) Priority Document No :11188128.0
(32) Priority Date :07/11/2011
(33) Name of priority country :EPO
(86) International Application No :PCT/EP2012/072066
Filing Date :07/11/2012
(87) International Publication No :WO 2013/068425
(61) Patent of Addition to Application Number :NA
Filing Date :NA
(62) Divisional to Application Number :NA
Filing Date :NA

(71)**Name of Applicant :**
1)NESTEC S.A.
Address of Applicant :Avenue Nestl 55 CH 1800 Vevey Switzerland
(72)**Name of Inventor :**
1)VIEIRA Joslio Batista
2)HUSSON Jwanro
3)WOLF Bettina
4)GOULD Joanne

(57) Abstract :
The present invention relates to the use of cocoa particles as the emulsifier system for the stabilization of a water in oil or oil in water emulsion. In another aspect there is now provided a confectionery product comprising cocoa particles as the emulsifying agent that does not contain any synthetic or artificial emulsifiers and to methods for producing such confectionery product.

No. of Pages : 23 No. of Claims : 7

(12) PATENT APPLICATION PUBLICATION
(19) INDIA
(22) Date of filing of Application :23/04/2014
(21) Application No.3254/DELNP/2014 A
(43) Publication Date : 22/05/2015

(54) Title of the invention : APPLICATOR FOR SPRAYING ELASTOMERIC MATERIALS

(51) International classification :B05B7/06,B29C41/00
(31) Priority Document No :13/297357
(32) Priority Date :16/11/2011
(33) Name of priority country :U.S.A.
(86) International Application No :PCT/CA2012/001007
Filing Date :31/10/2012
(87) International Publication No :WO 2013/071398
(61) Patent of Addition to Application Number :NA
Filing Date :NA
(62) Divisional to Application Number :NA
Filing Date :NA

(71)**Name of Applicant :**
1)CSL SILICONES INC.
Address of Applicant :144 Woodlawn Road West Guelph Ontario N1H 1B5 Canada
(72)**Name of Inventor :**
1)HUDA Faisal
2)MCCONNERY Christopher W.
3)WALKER Christopher A.
4)WOLTER Michael F.E.

(57) Abstract :
An applicator for spraying an elastomeric material comprises an applicator body having an internal bore and a fluid inlet for receiving a supply of the elastomeric material. A nozzle is coupled to the applicator body and has a discharge end with a spray outlet in fluid communication with the fluid inlet via a fluid passageway. A needle valve is slidably mounted within the internal bore for movement between a closed position for closing the fluid passageway and an open position for opening the fluid passageway so as to spray the elastomeric material. An air cap is coupled to the applicator body adjacent the nozzle for providing an atomizing airflow and a fan control airflow. The needle valve has a tip portion shaped to extend through the nozzle so as to be substantially flush with the discharge end of the nozzle when the needle valve is in the closed position.

No. of Pages : 55 No. of Claims : 39

(12) PATENT APPLICATION PUBLICATION
(19) INDIA
(22) Date of filing of Application :22/04/2014
(21) Application No.3185/DELNP/2014 A
(43) Publication Date : 22/05/2015

(54) Title of the invention : TURBINE BLADE POSITIONING SYSTEM

(51) International classification :F03D7/00
(31) Priority Document No :NA
(32) Priority Date :NA
(33) Name of priority country :NA
(86) International Application No :PCT/US2011/054850
Filing Date :05/10/2011
(87) International Publication No :WO 2013/052040
(61) Patent of Addition to Application Number :NA
Filing Date :NA
(62) Divisional to Application Number :NA
Filing Date :NA

(71)**Name of Applicant :**
1)LUNDHILD Viggo
Address of Applicant :66 Hutchinson Road Sutton MA 01590 U.S.A.
(72)**Name of Inventor :**
1)LUNDHILD Viggo

(57) Abstract :
A system comprised of common Industrial Control System components used to accurately positively and independently position turbine blades to be continuously re positioned in the optimum position with respect to the flow direction. This system would apply to Vertical Axis Wind Turbines (VAWT s) Tidal Ocean Current or River turbines where it is desirable to orient each blade in a specific position during the rotation of the turbine. The positioning of the blades is accomplished by an actuator which is attached to the shaft of the rotatable blades. The actuator position control is accomplished by creating an absolute relationship between the direction of the flow (either water or air) the turbine and the turbine blades. The turbine blade position flow direction and turbine position are determined by encoders attached to the turbine frame and the input shafts of the encoders being oriented by the blades and the flow direction.

No. of Pages : 8 No. of Claims : 4

(12) PATENT APPLICATION PUBLICATION
(19) INDIA
(22) Date of filing of Application :22/04/2014
(21) Application No.3186/DELNP/2014 A
(43) Publication Date : 22/05/2015

(54) Title of the invention : ROTATIONAL MOTION INDUCING VARIABLE FLOW RESISTANCE SYSTEMS HAVING A SIDEWALL FLUID OUTLET AND METHODS FOR USE THEREOF IN A SUBTERRANEAN FORMATION

(51) International classification :E21B43/12,E21B34/06
(31) Priority Document No :NA
(32) Priority Date :NA
(33) Name of priority country :NA
(86) International Application No :PCT/US2011/060087
Filing Date :10/11/2011
(87) International Publication No :WO 2013/070219
(61) Patent of Addition to Application Number :NA
Filing Date :NA
(62) Divisional to Application Number :NA
Filing Date :NA

(71)**Name of Applicant :**
1)HALLIBURTON ENERGY SERVICESINC.
Address of Applicant :10200 Bellaire Boulevard Houston TX 77072 U.S.A.
(72)**Name of Inventor :**
1)DYKSTRA Jason D.
2)FRIPP Michael L.

(57) Abstract :
Variable flow resistance systems can be used to regulate fluid flow in various applications particularly within a subterranean formation. A variable flow resistance system can comprise a chamber configured to induce rotational motion of a fluid flowing therethrough a fluid inlet coupled to the chamber and a fluid outlet coupled to the chamber that allows the fluid to exit through at least a sidewall of the chamber. If desired a plurality of the chambers can be connected in series fluid flow communication with one another.

No. of Pages : 37 No. of Claims : 21

(12) PATENT APPLICATION PUBLICATION
(19) INDIA
(22) Date of filing of Application :22/04/2014
(21) Application No.3187/DELNP/2014 A
(43) Publication Date : 22/05/2015

(54) Title of the invention : POLYPROPYLENE FOR THE PRODUCTION OF THERMOFORMED ARTICLES LARGE DEEP COMPLEX AND/OR THICK ARTICLES PROCESS FOR THERMOFORMING MODIFIED POLYPROPYLENE INTO LARGE DEEP COMPLEX AND/OR THICK ARTICLES AND USE OF THE POLYPROPYLENE

(51) International classification :C08L23/12,C08J9/00,C08J3/28
(31) Priority Document No :NA
(32) Priority Date :NA
(33) Name of priority country :NA
(86) International Application No :PCT/BR2011/000360
Filing Date :11/10/2011
(87) International Publication No :WO 2013/053025
(61) Patent of Addition to Application Number :NA
Filing Date :NA
(62) Divisional to Application Number :NA
Filing Date :NA

(71)**Name of Applicant :**
1)BRASKEM S.A.
Address of Applicant :Rua Eteno 1561 Complexo Petroquimico de Cama§ari 42810 000 Cama§ari BA Brazil
(72)**Name of Inventor :**
1)FARAH Marcelo
2)CRUZ Fernando
3)LIMA Alessandro Cauduro
4)DA LUZ Alexandre DI PINTOR
5)ROCHA Etienne Marcos De Almeida
6)DE AZEREDO Ana Paula
7)NEVES Claudio Jos Autran
8)SOFRI Fabio Lamon

(57) Abstract :
The present invention relates to a modified polypropylene comprising 0.3 2 long branches/1000 carbon atoms wherein said long branch comprises more than 1000 carbon atoms and 0 6% of alpha olefin comonomers comprising 2 18 carbon atoms. The polypropylene of the present invention is a homopolymer a random copolymer or a heterophasic copolymer. The present invention also relates to large deep complex and/or thick articles that are thermoformed from said polypropylene. Furthermore the present invention relates to the process for thermoforming said modified polypropylene into large deep complex and/or thick articles. The present invention also relates to the use of the polypropylene for preparing large deep complex and/or thick articles.

No. of Pages : 30 No. of Claims : 16

(12) PATENT APPLICATION PUBLICATION
(19) INDIA
(22) Date of filing of Application :23/04/2014
(21) Application No.3260/DELNP/2014 A
(43) Publication Date : 22/05/2015

(54) Title of the invention : METHOD AND APPARATUS FOR TREATMENT OF EFFLUENT ACCUMULATING IN A DESALINATION PLANT

(51) International classification :C02F1/22,C02F1/00
(31) Priority Document No :10 2011 116 699.1
(32) Priority Date :24/10/2011
(33) Name of priority country :Germany
(86) International Application No :PCT/EP2012/071029
Filing Date :24/10/2012
(87) International Publication No :WO 2013/060712
(61) Patent of Addition to Application Number :NA
Filing Date :NA
(62) Divisional to Application Number :NA
Filing Date :NA

(71)**Name of Applicant :**
1)OOSTHUIZEN Frederick Simon
Address of Applicant :Rabensl¼cke 40 24944 Flensburg Germany
(72)**Name of Inventor :**
1)OOSTHUIZEN Frederick Simon

(57) Abstract :
The procedure for treatment of effluent first cools the effluent (10) to form a pumpable ice effluent concentrate mixture that is subsequently fed to a filter device (13) in which the ice (14) is separated from the concentrate (18) and the ice and/or concentrate are used for heat exchange to precool the effluent.

No. of Pages : 22 No. of Claims : 15

(12) PATENT APPLICATION PUBLICATION
(19) INDIA
(22) Date of filing of Application :23/04/2014
(21) Application No.3261/DELNP/2014 A
(43) Publication Date : 22/05/2015

(54) Title of the invention : WIND TURBINE BLADE HAVING A GEOMETRIC SWEEP

(51) International classification :F03D1/06
(31) Priority Document No :13/357661
(32) Priority Date :25/01/2012
(33) Name of priority country :U.S.A.
(86) International Application No :PCT/EP2013/050663
Filing Date :15/01/2013
(87) International Publication No :WO 2013/110527
(61) Patent of Addition to Application Number :NA
Filing Date :NA
(62) Divisional to Application Number :NA
Filing Date :NA

(71)**Name of Applicant :**
1)SIEMENS AKTIENGESELLSCHAFT
Address of Applicant :Wittelsbacherplatz 2 80333 M¼nchen Germany
(72)**Name of Inventor :**
1)GILLING Lasse
2)HANSEN Henrik Fredslund
3)JOHNSON Scott J.
4)OBRECHT John M.
5)SIEVERS Ryan A.

(57) Abstract :
A swept wind turbine blade (20) includes a blade body (24) extending along a length between a root (26) and a tip (28) of the blade (20). A pitch axis (36) extends through the root (26) of the blade (20). A reference line (48) defines a deviation from the pitch axis (36) and corresponds to a swept shape of the blade (20) along its length. The reference line (48) has a zero sweep at the root (26) a zero slope at the root (26) and a positive curvature (66) along a segment within 25% of the length from the root (26) to the tip (28) of the blade (20).

No. of Pages : 26 No. of Claims : 19

(12) PATENT APPLICATION PUBLICATION
(19) INDIA
(22) Date of filing of Application :22/04/2014
(21) Application No.3190/DELNP/2014 A
(43) Publication Date : 22/05/2015

(54) Title of the invention : BYTE ALIGNMENT DEVICE AND BYTE ALIGNMENT METHOD

(51) International classification :H04N7/30,H03M7/40
(31) Priority Document No :2011236672
(32) Priority Date :28/10/2011
(33) Name of priority country :Japan
(86) International Application No :PCT/JP2012/076815
Filing Date :17/10/2012
(87) International Publication No :WO 2013/061840
(61) Patent of Addition to Application Number :NA
Filing Date :NA
(62) Divisional to Application Number :NA
Filing Date :NA

(71)**Name of Applicant :**
1)GNZO INC.
Address of Applicant :300 Yamada Oi machi Ashigarakami gun Kanagawa 2580015 Japan
(72)**Name of Inventor :**
1)KASAI Hiroyuki
2)UCHIHARA Naofumi
3)UEHARA Yukio

(57) Abstract :
The purpose of the present invention is to provide a technique for subjecting a bit stream to byte alignment. An adjustment coefficient sequence which is a high frequency component among the quantized block coefficient sequences is replaced with a predetermined reference coefficient sequence. Subsequently the amount by which the bits need to be increased for byte alignment is calculated on the basis of the encoding amount of the bit stream obtained by subjecting the block coefficient sequence in which the adjustment coefficient sequence is replaced with the reference coefficient sequence to variable length coding. Then the appropriate adjustment coefficient sequence that should be replaced with the reference coefficient sequence is searched for on the basis of the amount by which the bits need to be increased. Finally the found adjustment coefficient sequence is inserted into the high frequency component corresponding to the reference coefficient sequence.

No. of Pages : 43 No. of Claims : 8

(12) PATENT APPLICATION PUBLICATION
(19) INDIA
(22) Date of filing of Application :22/04/2014
(21) Application No.3191/DELNP/2014 A
(43) Publication Date : 22/05/2015

(54) Title of the invention : ENCODING SYSTEM AND ENCODING METHOD FOR VIDEO SIGNALS

(51) International classification :H04N7/32
(31) Priority Document No :2011232863
(32) Priority Date :24/10/2011
(33) Name of priority country :Japan
(86) International Application No :PCT/JP2012/076813
Filing Date :17/10/2012
(87) International Publication No :WO 2013/061839
(61) Patent of Addition to Application Number :NA
Filing Date :NA
(62) Divisional to Application Number :NA
Filing Date :NA

(71)**Name of Applicant :**
1)GNZO INC.
Address of Applicant :300 Yamada Oi machi Ashigarakami gun Kanagawa 2580015 Japan
(72)**Name of Inventor :**
1)KASAI Hiroyuki
2)UCHIHARA Naofumi

(57) Abstract :
Provided is a technique whereby it is possible to generate a linked stream while reducing the load on a server by devising a method for encoding a video tile stream. After receiving a video signal to be encoded a tile stream is generated by encoding the video signal by using appropriate prediction reference information. A video tile stream obtained by encoding is outputted. A prediction reference information restriction method or a prediction reference information fixation method is employed when encoding video information so that an error arising from a conflict in the prediction relationship of the signal even when arbitrarily connecting the stream configured from each MB line of a frame in the video tile stream does not occur. The conflict in the prediction information written during streaming and determined during encoding can be avoided when linking the tile streams.

No. of Pages : 70 No. of Claims : 11

(12) PATENT APPLICATION PUBLICATION
(19) INDIA
(22) Date of filing of Application :23/04/2014
(21) Application No.3267/DELNP/2014 A
(43) Publication Date : 22/05/2015

(54) Title of the invention : ISOLATING VALVE

(51) International classification :F16K5/06
(31) Priority Document No :1159649
(32) Priority Date :25/10/2011
(33) Name of priority country :France
(86) International Application No :PCT/FR2012/052425
Filing Date :23/10/2012
(87) International Publication No :WO 2013/060979
(61) Patent of Addition to Application Number :NA
Filing Date :NA
(62) Divisional to Application Number :NA
Filing Date :NA

(71)**Name of Applicant :**
1)TOTAL SA
Address of Applicant :La Defense 6 2 Place Jean Millier F 92400 Courbevoie France
(72)**Name of Inventor :**
1)MALNOU Dominique

(57) Abstract :
The invention relates to an isolating valve comprising a body (1) comprising a canal (4) for the passage of fluid which is intended to be shut off by upstream and downstream spherical plugs (5 6) that can be actuated independently of one another between positions allowing the passage of fluid through said canal (4) and positions of shutting off the canal (4) and sealing checking means (34) opening into said canal (4) and between the two spherical plugs (5 6). The upstream plug (5) is equipped with an upstream seat (14) of the simple piston effect type and has no downstream seat. The downstream plug (6) is equipped with an upstream seat (16) of the simple piston effect type and with a downstream seat (17) of the double piston effect type.

No. of Pages : 32 No. of Claims : 10

(12) PATENT APPLICATION PUBLICATION
(19) INDIA
(22) Date of filing of Application :23/04/2014
(21) Application No.3268/DELNP/2014 A
(43) Publication Date : 22/05/2015

(54) Title of the invention : MOLDED ARTICLE EXTRACTOR AND METHOD

(51) International classification :B29C35/02,B29D30/08
(31) Priority Document No :13/281587
(32) Priority Date :26/10/2011
(33) Name of priority country :U.S.A.
(86) International Application No :PCT/US2012/056445
Filing Date :21/09/2012
(87) International Publication No :WO 2013/062699
(61) Patent of Addition to Application Number :NA
Filing Date :NA
(62) Divisional to Application Number :NA
Filing Date :NA

(71)**Name of Applicant :**
1)BRIDGESTONE BANDAG LLC
Address of Applicant :2000 Bandag Drive Muscatine Iowa 52761 U.S.A.
(72)**Name of Inventor :**
1)GRIDLEY Jason
2)KOST Troy

(57) Abstract :
A tire tread extractor used in the manufacture of treads includes a frame a first nip roller rotatably associated with the frame and a second nip roller rotatably associated with the frame. The first and second nip rollers are adapted to engage a tire tread at least partially resident in a mold. A driving mechanism associated with the first and/or second nip rollers operates to impart rotational motion thereto. The frame is configured for longitudinal movement along a substantial portion of a longitudinal length of the mold while maintaining the first and second nip rollers in a spaced relation to the mold.

No. of Pages : 28 No. of Claims : 31

(12) PATENT APPLICATION PUBLICATION
(19) INDIA
(22) Date of filing of Application :22/04/2014
(21) Application No.3198/DELNP/2014 A
(43) Publication Date : 22/05/2015

(54) Title of the invention : VEHICLE TRAVEL TRACK CONTROL DEVICE

(51) International classification :B62D6/00,B60W30/12,B62D113/00
(31) Priority Document No :NA
(32) Priority Date :NA
(33) Name of priority country :NA
(86) International Application No :PCT/JP2011/075766
Filing Date :08/11/2011
(87) International Publication No :WO 2013/069099
(61) Patent of Addition to Application Number :NA
Filing Date :NA
(62) Divisional to Application Number :NA
Filing Date :NA

(71)**Name of Applicant :**
1)TOYOTA JIDOSHA KABUSHIKI KAISHA
Address of Applicant :1 Toyota cho Toyota shi Aichi 4718571 Japan
(72)**Name of Inventor :**
1)MITSUMOTO Hisanori
2)KOJO Takahiro
3)KUNIHIRO Yoji
4)TAKASHIMA Toru

(57) Abstract :
Provided is a vehicle travel track control device which includes a forward image capture device (68) which captures an image of what is ahead of a vehicle and side image capture devices (70 72) which capture an image of what is to the left side and/or the right side of the vehicle. When it is possible to properly execute a travel track control on the basis of image capture information of what is ahead of the vehicle (S200 350) the travel track control is executed on the basis of the image capture information of what is ahead of the vehicle from the forward image capture device (S400) and when it is not possible to properly execute a travel track control on the basis of the image capture information of what is ahead of the vehicle the travel track control is executed on the basis of at least image capture information of what is to the sides of the vehicle from the side image capture devices (S300 600).

No. of Pages : 74 No. of Claims : 18

(12) PATENT APPLICATION PUBLICATION
(19) INDIA
(22) Date of filing of Application :22/04/2014
(21) Application No.3199/DELNP/2014 A
(43) Publication Date : 22/05/2015

(54) Title of the invention : APPARATUS FOR PROCESSING PLASTIC MATERIAL

(51) International classification :B29B13/10,B29B17/04,B29C47/10
(31) Priority Document No :A 1500/2011
(32) Priority Date :14/10/2011
(33) Name of priority country :Austria
(86) International Application No :PCT/AT2012/050150
Filing Date :12/10/2012
(87) International Publication No :WO 2013/052978
(61) Patent of Addition to Application Number :NA
Filing Date :NA
(62) Divisional to Application Number :NA
Filing Date :NA

(71)**Name of Applicant :**
1)EREMA ENGINEERING RECYCLING MASCHINEN UND ANLAGEN GESELLSCHAFT M.B.H.
Address of Applicant :Freindorf Unterfeldstrasse 3 A 4052 Ansfelden Austria
(72)**Name of Inventor :**
1)FEICHTINGER Klaus
2)HACKL Manfred

(57) Abstract :
The invention relates to an apparatus for preprocessing and subsequently conveying or plasticizing plastics comprising a container (1) with a mixing and/or comminuting tool (3) that can rotate about a rotational axis (10) wherein an opening (8) is formed in a lateral wall (9) through which the plastic material can be discharged and a multiple screw conveyor (5) is provided with at least two screws (6) rotating in a housing (16). The invention is characterized in that the imaginary extension of the longitudinal axis (15) of the conveyor (5) passes by the rotational axis (10) counter the conveying direction (17) wherein the longitudinal axis (15) of the screw (6) that is closest to the container (1) is on the outlet side offset by a distance (18) in relation to the radial (11) that is parallel to the longitudinal axis (15) and the two screws (6) closest to the feed opening (80) run in opposite directions.

No. of Pages : 35 No. of Claims : 20

(12) PATENT APPLICATION PUBLICATION
(19) INDIA
(22) Date of filing of Application :02/01/2015
(21) Application No.32/DELNP/2015 A
(43) Publication Date : 22/05/2015

(54) Title of the invention : METHOD FOR CREATING PATTERNS ON A CONCRETE SURFACE

(51) International classification :C04B41/72
(31) Priority Document No :12 56422
(32) Priority Date :04/07/2012
(33) Name of priority country :France
(86) International Application No :PCT/EP2013/064056
Filing Date :03/07/2013
(87) International Publication No :WO 2014/006102
(61) Patent of Addition to Application Number :NA
Filing Date :NA
(62) Divisional to Application Number :NA
Filing Date :NA

(71)**Name of Applicant :**
1)CHRYSO
Address of Applicant :19 Place de la Rsistance F 92440 Issy les Moulineaux France
(72)**Name of Inventor :**
1)PUCEL Philippe
2)BURLERAUX Amlie
3)NIEUWEBOER MAIGNAN Isabelle

(57) Abstract :
The present invention relates to a method for creating patterns on a surface of the hydraulic binder composition including depositing a stencil onto the surface of the fresh hydraulic binder composition and then applying a deactivating composition (A) on the thus covered surface.

No. of Pages : 17 No. of Claims : 14

(12) PATENT APPLICATION PUBLICATION
(19) INDIA
(22) Date of filing of Application :23/04/2014
(21) Application No.3270/DELNP/2014 A
(43) Publication Date : 22/05/2015

(54) Title of the invention : PIPE JOINT

(51) International classification :F16L33/10,F16L33/02,F16L33/20
(31) Priority Document No :2012001973
(32) Priority Date :10/01/2012
(33) Name of priority country :Japan
(86) International Application No :PCT/JP2012/064465
Filing Date :05/06/2012
(87) International Publication No :WO 2013/105287
(61) Patent of Addition to Application Number :NA
Filing Date :NA
(62) Divisional to Application Number :NA
Filing Date :NA

(71)**Name of Applicant :**
1)HIGASHIO MECH CO. LTD.
Address of Applicant :8 22 Kikusui cho Kawachinagano shi Osaka 5860012 Japan
(72)**Name of Inventor :**
1)TAKAHASHI Kiyokazu
2)INOUE Hiroshi
3)MATSUSHITA Yousuke
4)TAKADA Tamotsu

(57) Abstract :
Provided is a pipe joint which is configured so that the loss of rotational force applied by an electric working tool or a human is significantly reduced and so that fastening rings can be reduced in diameter by small torque. A pipe joint comprises: fastening rings (6) which are longitudinally wound over a predetermined central angle in the range from 360° to 480°; a guide member which prevents the fastening rings (6) from falling over and which holds the fastening rings (6) so as to permit the fastening rings (6) to be reduced in diameter and deformed; a substantially triangular mountain shaped toggle member (11) which is disposed so that in a state in which a pipe is not connected the toggle member (11) protrudes further outward in the radial direction than the fastening rings (6); and a bolt/nut joint (X) which moves the central top section of the toggle member (11) inward in the radial direction so as to reduce the height of the mountain of the toggle member (11). The fastening rings (6) have engagement claws (7) protruding outward in the radial direction. The pipe joint is configured so that when the toggle member (11) moves inward in the radial direction the toggle member (11) moves in the circumferential direction while the bottom ends of the toggle member (11) engage with the engagement claws (7) thereby reducing the diameter of the fastening rings (6).

No. of Pages : 74 No. of Claims : 8

(12) PATENT APPLICATION PUBLICATION
(19) INDIA
(22) Date of filing of Application :21/04/2014
(21) Application No.3126/DELNP/2014 A
(43) Publication Date : 22/05/2015

(54) Title of the invention : A METHOD FOR DUEL HANDLING IN A COMBAT AIRCRAFT

(51) International classification :F41G3/22,G06F17/50
(31) Priority Document No :NA
(32) Priority Date :NA
(33) Name of priority country :NA
(86) International Application No :PCT/SE2012/050167
Filing Date :16/02/2012
(87) International Publication No :WO 2013/122520
(61) Patent of Addition to Application Number :NA
Filing Date :NA
(62) Divisional to Application Number :NA
Filing Date :NA

(71)**Name of Applicant :**
1)SAAB AB
Address of Applicant :S 581 88 Linkping Sweden
(72)**Name of Inventor :**
1)LUNDQVIST Anders
2)KENSING Vibeke

(57) Abstract :
The invention relates to a method for decision support of a first combat aircraft in a duel situation with a second combat aircraft. The method comprises the steps of: a) determining (3) a first plurality of combat value parameters of the first combat aircraft (1) and determining (3) a second plurality of combat value parameters of the second combat aircraft (2) wherein the second combat aircraft (2) is different to the first combat aircraft (1) b) analyzing (4) the first and the second plurality of combat value parameters determined in the previous step (step a)) by fitting the first and the second plurality of combat value parameters to a predefined model and c) combining (5) the first plurality of combat value parameters analyzed in the previous step (step b)) to calculate a first value and combining (5) the second plurality of combat value parameters analyzed in the previous step (step b)) to calculate a second value wherein the first value and the second value are compared to each other to determine the optimum success probability data of the first combat aircraft (1) and of the second combat aircraft (2) adapted for decision support in the duel situation. In this way a reliable and fast tool for the pilot is provided while the tool is easy to handle and assists the pilot in order to make a quick and efficient decision in duel situations.

No. of Pages : 14 No. of Claims : 11

(12) PATENT APPLICATION PUBLICATION
(19) INDIA
(22) Date of filing of Application :22/04/2014
(21) Application No.3200/DELNP/2014 A
(43) Publication Date : 22/05/2015

(54) Title of the invention : ANTIGENS DERIVED FROM CITRULLINATED 14 3 3 AND USES THEREOF IN THE DIAGNOSIS OF RHEUMATOID ARTHRITIS

(51) International classification :C07K14/47,C07K16/18,C07K17/00
(31) Priority Document No :61/550046
(32) Priority Date :21/10/2011
(33) Name of priority country :U.S.A.
(86) International Application No :PCT/CA2012/050748
Filing Date :19/10/2012
(87) International Publication No :WO 2013/056377
(61) Patent of Addition to Application Number :NA
Filing Date :NA
(62) Divisional to Application Number :NA
Filing Date :NA

(71)**Name of Applicant :**
1)AUGUREX LIFE SCIENCES CORPORATION
Address of Applicant :1423 Dempsey Road North Vancouver British Columbia V7K 1S7 Canada
(72)**Name of Inventor :**
1)MAROTTA Anthony

(57) Abstract :
The present invention provides citrullinated 14 3 3 peptides and antibodies thereto and methods of using same to evaluate arthritic conditions such as rheumatoid arthritis.

No. of Pages : 59 No. of Claims : 20

(12) PATENT APPLICATION PUBLICATION
(19) INDIA
(22) Date of filing of Application :23/04/2014
(21) Application No.3277/DELNP/2014 A
(43) Publication Date : 22/05/2015

(54) Title of the invention : 7 {(3S 4S) 3 [(CYCLOPROPYLAMINO)METHYL] 4 FLUOROPYRROLIDINE 1 YL} 6 FLUORO 1 (2 FLUOROETHYL) 8 METHOXY 4 OXO 1 4 DIHYDROQUINOLINE 3 CARBOXYLIC ACID CRYSTAL

(51) International classification	:C07D401/04,A61K31/4709,A61P31/04
(31) Priority Document No	:2011246209
(32) Priority Date	:10/11/2011
(33) Name of priority country	:Japan
(86) International Application No	:PCT/JP2012/007195
Filing Date	:09/11/2012
(87) International Publication No	:WO 2013/069297
(61) Patent of Addition to Application Number	:NA
Filing Date	:NA
(62) Divisional to Application Number	:NA
Filing Date	:NA

(71)**Name of Applicant :**
1)KYORIN PHARMACEUTICAL CO. LTD.
Address of Applicant :6 Kanda Surugadai 4 chome Chiyoda ku Tokyo 1018311 Japan
(72)**Name of Inventor :**
1)ARAYA Ichiro
2)GOTO Akinori
3)MINAGAWA Wataru
4)FUNADA Keiko
5)NAGAO Muneki

(57) Abstract :
The purpose of the present invention is to provide a hydrochloride crystal a hydrochloride hydrate crystal and a methanesulfonate crystal of the compound represented by formula (1). These crystals are less susceptible to decomposition caused by the effects of light and also have high preservation stability and high water solubility compared to a free crystal of the compound (1).

No. of Pages : 56 No. of Claims : 23

(12) PATENT APPLICATION PUBLICATION
(19) INDIA
(22) Date of filing of Application :23/04/2014
(21) Application No.3278/DELNP/2014 A
(43) Publication Date : 22/05/2015

(54) Title of the invention : SILICA SPHERICAL BODY AND AFFINITY CARRIER

(51) International classification :C01B33/193,G01N30/88,C07K17/14
(31) Priority Document No :2011237204
(32) Priority Date :28/10/2011
(33) Name of priority country :Japan
(86) International Application No :PCT/JP2012/077788
Filing Date :26/10/2012
(87) International Publication No :WO 2013/062105
(61) Patent of Addition to Application Number :NA
Filing Date :NA
(62) Divisional to Application Number :NA
Filing Date :NA

(71)**Name of Applicant :**
1)AGC SI TECH CO. LTD.
Address of Applicant :13 1 Kitaminato machi Wakamatsu ku Kitakyushu shi Fukuoka 8080027 Japan
(72)**Name of Inventor :**
1)MIYAHARA Hiroyoshi
2)NAKASHIMA Ryou
3)HIGASHI Kenji

(57) Abstract :
Provided is an affinity carrier having a low pressure loss and a high binding capacity even when the linear flow rate of a solution passing through the carrier is fast. Also provided is a silica spherical body having (a) according to laser light scattering an average particle diameter of 30 to 40 μm (b)according to measurement by a Coulter counter a ratio (D10/D90) of 1.50 or less where D10 is 10% and D90 is 90% beginning from the smallest cumulative volume of the particle diameter distribution and (c) according to mercury porosimetry an average micropore diameter of between 85 to 115 nm and a micropore volume of 1.5 mL/g or greater as determined by mercury porosimetry.

No. of Pages : 30 No. of Claims : 7

(12) PATENT APPLICATION PUBLICATION
(19) INDIA
(22) Date of filing of Application :23/04/2014
(21) Application No.3279/DELNP/2014 A
(43) Publication Date : 22/05/2015

(54) Title of the invention : TABLET TESTING DEVICE

(51) International classification :G01B5/00
(31) Priority Document No :61/550951
(32) Priority Date :25/10/2011
(33) Name of priority country :U.S.A.
(86) International Application No :PCT/IB2012/055735
Filing Date :19/10/2012
(87) International Publication No :WO 2013/061223
(61) Patent of Addition to Application Number :NA
Filing Date :NA
(62) Divisional to Application Number :NA
Filing Date :NA

(71)**Name of Applicant :**
1)PHARMATRON AG
Address of Applicant :Uttigenstrasse 28 CH 3600 Thun Switzerland
(72)**Name of Inventor :**
1)FORCELLA Bruno
2)JUNOD Fran§ois

(57) Abstract :
The invention relates to a tablet testing device for testing tablets with at least one tablet testing station suitable for carrying out at least one test procedure and preferably at least one apparatus suitable for receiving and possibly also crushing the tablet and also at least one device for positioning a test specimen in accordance with the procedure. The device in accordance with the invention for positioning the tablet includes at least one movable positioning surface preferably a flap and at least one further surface that interacts with this positioning surface for the purpose of positioning the tablet.

No. of Pages : 23 No. of Claims : 39

(12) PATENT APPLICATION PUBLICATION
(19) INDIA
(22) Date of filing of Application :02/03/2015
(21) Application No.1704/DELNP/2015 A
(43) Publication Date : 22/05/2015

(54) Title of the invention : COMPOSITIONS COMPRISING PEG AND ASCORBATE

(51) International classification :A61K31/375,A61K9/00,A61K47/10
(31) Priority Document No :61/699488
(32) Priority Date :11/09/2012
(33) Name of priority country :U.S.A.
(86) International Application No :PCT/EP2013/068738
Filing Date :10/09/2013
(87) International Publication No :WO 2014/040994
(61) Patent of Addition to Application Number :NA
Filing Date :NA
(62) Divisional to Application Number :NA
Filing Date :NA

(71)**Name of Applicant :**
1)NORGINE BV
Address of Applicant :Hogehilweg 7 NL 1101 CA Amsterdam Zuid Oost Netherlands
(72)**Name of Inventor :**
1)CLAYTON Lucy
2)COCKETT Alasdair
3)CHRISTODOULOU Mark
4)DAVIDSON Ian
5)FARRAG Lynn
6)HALPHEN Marc
7)JONES Leighton
8)PETROSSIAN Vanik
9)STEIN Peter
10)TISI David
11)UNGAR Alex
12)WORTHINGTON Jeffrey

(57) Abstract :
The invention provides acolon cleansing solutioncomprising: a) 300 to 800 mmol per litre ascorbate anion provided by a mixtureof: (i) ascorbic acid and (ii) one or more salts of ascorbic acid the components (i) and (ii) being present in a molar ratio of from 1:4.5 to 1:7.0; and b) 10 to 200 g per litre polyethylene glycol. The invention also provides methods an kits associated with or making use of the solutions and compositions for the preparation of the solutions.

No. of Pages : 89 No. of Claims : 60

(12) PATENT APPLICATION PUBLICATION
(21) Application No.197/DEL/2012 A
(19) INDIA
(22) Date of filing of Application :24/01/2012
(43) Publication Date : 22/05/2015

(54) Title of the invention : INFORMATION PROCESSING APPARATUS, INFORMANTION PROCESSING MEHTOD, AND PROGRAM

(51) International classification :G11B
(31) Priority Document No :P2011-017889
(32) Priority Date :31/01/2011
(33) Name of priority country :Japan
(86) International Application No :NA
Filing Date :NA
(87) International Publication No :NA
(61) Patent of Addition to Application Number :NA
Filing Date :NA
(62) Divisional to Application Number :NA
Filing Date :NA

(71)**Name of Applicant :**
1)SONY CORPORATION
Address of Applicant :1-7-1 KONAN, MINATO-KU, TOKYO, JAPAN
(72)**Name of Inventor :**
1)HIDEO NAGASAKA
2)TOMONORI MISAWA
3)TADAAKI KIMIJIMA

(57) Abstract :
An information processing apparatus includes a data processing section, the data processing section being configured to transmit device information about a peripheral device of the information processing apparatus to a server, display an app list on a display section, the app list being a list of device-specific application programs received from the server, transmit app selection information to the server in response to an input of the app selection information by a user with respect to the app list, and acquire and execute a device-specific application program identified on a basis of the app selection information from the server.

No. of Pages : 63 No. of Claims : 13

(12) PATENT APPLICATION PUBLICATION
(19) INDIA
(22) Date of filing of Application :21/04/2014
(21) Application No.3150/DELNP/2014 A
(43) Publication Date : 22/05/2015

(54) Title of the invention : ELIMINATION OF HYDRAULIC FLUID CONTAMINATION THROUGH INTERNAL BRIGHT ANNEALING

(51) International classification :E21B21/14,B08B9/027,E21B21/08
(31) Priority Document No :13/290522
(32) Priority Date :07/11/2011
(33) Name of priority country :U.S.A.
(86) International Application No :PCT/US2012/058757
Filing Date :04/10/2012
(87) International Publication No :WO 2013/070344
(61) Patent of Addition to Application Number :NA
Filing Date :NA
(62) Divisional to Application Number :NA
Filing Date :NA

(71)**Name of Applicant :**
1)BAKER HUGHES INCORPORATED
Address of Applicant :P.O. Box 4740 Houston Texas 77210 4740 U.S.A.
(72)**Name of Inventor :**
1)BUSSEAR Terry R.
2)BAILEY William M.

(57) Abstract :
A method and apparatus for cleaning a tubular member is disclosed. A storage device holds the tubular member in a finished form and a translation device passes the tubular member from the first storage device. A gas is supplied through the tubular member. A heating device heats the drawn tubular member and the gas passing through the tubular member to clean debris from inside the tubular member.

No. of Pages : 15 No. of Claims : 20

(12) PATENT APPLICATION PUBLICATION
(19) INDIA
(22) Date of filing of Application :21/04/2014
(21) Application No.3152/DELNP/2014 A
(43) Publication Date : 22/05/2015

(54) Title of the invention : CATALYST COMPOSITIONS AND THEIR USE FOR HYDROGENATION OF NITRILE RUBBER

(51) International classification	:C08C19/02,C08L15/00,B01J31/22
(31) Priority Document No	:PCT/CN2011/081097
(32) Priority Date	:21/10/2011
(33) Name of priority country	:China
(86) International Application No	:PCT/EP2012/070811
Filing Date	:19/10/2012
(87) International Publication No	:WO 2013/057285
(61) Patent of Addition to Application Number	:NA
Filing Date	:NA
(62) Divisional to Application Number	:NA
Filing Date	:NA

(71)**Name of Applicant :**
1)LANXESS DEUTSCHLAND GMBH
Address of Applicant :Kennedyplatz 1 50569 Kln Germany
(72)**Name of Inventor :**
1)LIU Qingchun
2)WEI Zhenli

(57) Abstract :
This invention relates to novel catalyst compositions based on Ruthenium or Osmium based complex catalysts and to a process for selectively hydrogenating nitrile rubbers in the presence of such catalyst compositions.

No. of Pages : 101 No. of Claims : 16

(12) PATENT APPLICATION PUBLICATION
(19) INDIA
(22) Date of filing of Application :22/04/2014
(21) Application No.3221/DELNP/2014 A
(43) Publication Date : 22/05/2015

(54) Title of the invention : MAGNETIC COMPOSITION AND METHOD FOR PRODUCING SAME

(51) International classification :A61K31/295,A61K9/10,A61P35/00
(31) Priority Document No :2011222354
(32) Priority Date :06/10/2011
(33) Name of priority country :Japan
(86) International Application No :PCT/JP2012/072794
Filing Date :06/09/2012
(87) International Publication No :WO 2013/051363
(61) Patent of Addition to Application Number :NA
Filing Date :NA
(62) Divisional to Application Number :NA
Filing Date :NA

(71)**Name of Applicant :**
1)IHI CORPORATION
Address of Applicant :1 1 Toyosu 3 chome Koto ku Tokyo 1358710 Japan
(72)**Name of Inventor :**
1)ISHIKAWA Yoshihiro
2)EGUCHI Haruki

(57) Abstract :
Provide is a magnetic composition containing a metal salen complex compound which can be reliably guided by means of magnetic field to a target region that is desired to be treated. Also provided is a method for producing said magnetic composition. A magnetic composition formed by dispersing magnetic particles in which a metal salen complex compound is coated with a dispersant into a polar solvent by means of said dispersant. A method for producing the magnetic composition the method involving a first step for mixing a metal salen complex compound with a dispersant in an organic solvent and for coating the metal salen complex compound with the dispersant and a second step for dispersing the metal salen complex into a polar solvent.

No. of Pages : 20 No. of Claims : 8

(12) PATENT APPLICATION PUBLICATION
(21) Application No.3350/DEL/2013 A
(19) INDIA
(22) Date of filing of Application :14/11/2013
(43) Publication Date : 22/05/2015

(54) Title of the invention : A PROCESS FOR PREPARING ANTI MICROBIAL TEXTILE

(51) International classification :A01N
(31) Priority Document No :NA
(32) Priority Date :NA
(33) Name of priority country :NA
(86) International Application No :NA
Filing Date :NA
(87) International Publication No : NA
(61) Patent of Addition to Application Number :NA
Filing Date :NA
(62) Divisional to Application Number :NA
Filing Date :NA

(71)**Name of Applicant :**
1)DIRECTOR GENERAL DEFENCE RESEARCH & DEVELOPMENT ORGANISATION
Address of Applicant :MINISTRY OF DEFENCE, GOVERNMENT OF INDIA, ROOM NO. 348, B-WING, DRDO BHAWAN, RAJAJI MARG, NEW DELHI-110011 Delhi India
(72)**Name of Inventor :**
1)BERA, ANURADHA
2)GARAI, PURABI
3)KUMAR, DEVENDER
4)VAIJAPURKAR, SHYAM, GOVIND

(57) Abstract :
The present invention is related generally to the field of the production of antimicrobial cotton fabric(s). Particularly, the Invention provides a process for the production of antimicrobial cotton fabric(s) by using radiolytically synthesized nano silver colloidal particles. The process significantly achieves high antimicrobial efficacy with very low loading of 10 nanosilver colloidal particles on cotton fabric(s) and also exhibits reduced amount of leaching of nanosilver colloidal particles from the coated anti microbial cotton fabric(s).

No. of Pages : 34 No. of Claims : 13

(12) PATENT APPLICATION PUBLICATION
(21) Application No.3212/DELNP/2014 A
(19) INDIA
(22) Date of filing of Application :22/04/2014
(43) Publication Date : 22/05/2015

(54) Title of the invention : HIGH STRENGTH HOT DIPPED GALVANIZED STEEL SHEET AND HIGH STRENGTH ALLOYED HOT DIPPED GALVANIZED STEEL SHEET EACH HAVING TENSILE STRENGTH OF 980 MPA OR MORE EXCELLENT PLATING ADHESION EXCELLENT FORMABILITY AND EXCELLENT BORE EXPANDING PROPERTIES AND METHOD FOR PRODUCING SAME

(51) International classification :C22C38/00,C21D9/46,C22C18/00
(31) Priority Document No :2011216967
(32) Priority Date :30/09/2011
(33) Name of priority country :Japan
(86) International Application No :PCT/JP2012/075230
Filing Date :28/09/2012
(87) International Publication No :WO 2013/047830
(61) Patent of Addition to Application Number :NA
Filing Date :NA
(62) Divisional to Application Number :NA
Filing Date :NA

(71)**Name of Applicant :**
1)NIPPON STEEL & SUMITOMO METAL CORPORATION
Address of Applicant :6 1 Marunouchi 2 chome Chiyoda ku Tokyo 1008071 Japan
(72)**Name of Inventor :**
1)WAKABAYASHI Chisato
2)AZUMA Masafumi
3)FUJITA Nobuhiro
4)SANO Kohichi

(57) Abstract :
A high strength hot dipped galvanized steel sheet which has a tensile strength of 980 MPa or more while having excellent plating adhesion formability and bore expanding properties. This high strength hot dipped galvanized steel sheet has a hot dipped zinc plating layer on the surface of a matrix steel sheet and the matrix steel sheet contains in mass% 0.05 0.4% of C 0.01 3.0% of Si 0.1 3.0% of Mn and 0.01 2.0% of Al while satisfying Si + Al > 0.5% and suppressing P to 0.04% or less S to 0.05% or less and N to 0.01% or less with the balance made up of iron and unavoidable impurities. The microstructure of the matrix steel sheet contains 40% by volume or more of martensite and bainite in total 8% by volume or more of residual austenite with the balance made up of ferrite or ferrite and 10% by volume or less of pearlite. The martensite contains two or more of the three kinds of martensite (1) (2) and (3) in an amount of 10% by volume or more in total and the hot dipped zinc plating layer contains less than 7% by mass of Fe.

No. of Pages : 55 No. of Claims : 16

(12) PATENT APPLICATION PUBLICATION
(19) INDIA
(22) Date of filing of Application :22/04/2014
(21) Application No.3213/DELNP/2014 A
(43) Publication Date : 22/05/2015

(54) Title of the invention : TYROSINE BASED LINKERS FOR THE RELEASABLE CONNECTION OF PEPTIDES

(51) International classification :A61K47/48,C07K5/02,C07K5/06
(31) Priority Document No :11187737.9
(32) Priority Date :03/11/2011
(33) Name of priority country :EPO
(86) International Application No :PCT/EP2012/071373
Filing Date :29/10/2012
(87) International Publication No :WO 2013/064455
(61) Patent of Addition to Application Number :NA
Filing Date :NA
(62) Divisional to Application Number :NA
Filing Date :NA

(71)**Name of Applicant :**
1)BAYER INTELLECTUAL PROPERTY GMBH
Address of Applicant :Alfred Nobel Str. 10 40789 Monheim Germany
2)BAYER PHARMA AKTIENGESELLSCHAFT
(72)**Name of Inventor :**
1)FLAMME Ingo
2)K–BBERLING Johannes
3)LERCHEN Hans Georg
4)GRIEBENOW Nils
5)SCHOHE LOOP Rudolf
6)WITTROCK Sven
7)KRENZ Ursula

(57) Abstract :
The invention relates to novel tyrosine based linkers that allow the releasable connection of peptides or proteins with other molecular entities e.g. polyethylene glycol to processes for their preparation and their use for preparing medicaments for the treatment and/or prophylaxis of diseases.

No. of Pages : 95 No. of Claims : 12

(12) PATENT APPLICATION PUBLICATION
(19) INDIA
(22) Date of filing of Application :12/01/2012
(21) Application No.336/DELNP/2012 A
(43) Publication Date : 22/05/2015

(54) Title of the invention : OPTICALLY ADDRESSED LIGHT VALVE

(51) International classification :G02F 1/135
(31) Priority Document No :0912241.7
(32) Priority Date :15/07/2009
(33) Name of priority country :U.K.
(86) International Application No :PCT/GB2010/001349
Filing Date :15/07/2010
(87) International Publication No :WO 2010/7143
(61) Patent of Addition to Application Number :NA
Filing Date :NA
(62) Divisional to Application Number :NA
Filing Date :NA

(71)**Name of Applicant :**
1)THE SECRETARY OF STATE FOR DEFFENCE
Address of Applicant :DSTL, PORTON DOWN, SALISBURY, WILTSHIRE SP4 0JQ, UNITED KINGDOM.
(72)**Name of Inventor :**
1)CHRISTOPHER DAVID BURGESS

(57) Abstract :
An optically addressed light valve suitable for selectively limiting the transmission of radiation from high intensity light sources independent of wavelength using a TN liquid crystal cell and a photoconductive material (vanadium doped silicon carbide).

No. of Pages : 15 No. of Claims : 8

(12) PATENT APPLICATION PUBLICATION
(19) INDIA
(22) Date of filing of Application :18/11/2013
(21) Application No.3360/DEL/2013 A
(43) Publication Date : 22/05/2015

(54) Title of the invention : FILTERING ON CLASSES AND PARTICULARS OF A PACKET DESTINATION ADDRESS AT LOWER-PROTOCOL LAYERS IN A NETWORKED DEVICE

(51) International classification :H04L
(31) Priority Document No :NA
(32) Priority Date :NA
(33) Name of priority country :NA
(86) International Application No :NA
Filing Date :NA
(87) International Publication No : NA
(61) Patent of Addition to Application Number :NA
Filing Date :NA
(62) Divisional to Application Number :NA
Filing Date :NA

(71)**Name of Applicant :**
1)CISCO TECHNOLOGY, INC.
Address of Applicant :170 WEST TASMAN DRIVE, SAN JOSE, CA 95134-1706, U.S.A.
(72)**Name of Inventor :**
1)PASCAL THUBERT
2)SHWETHA SUBRAY BHANDARI

(57) Abstract :
In one embodiment, a lower protocol layer in a network device filters packets based on a class and a particular of a destination address prior to sending information from the received packet to a higher protocol layer. For example, certain constrained networks include network nodes that do not have the ability to maintain a multicast distribution entry for each multicast address used in the network. By only forwarding on a portion of a multicast address, packets are often delivered to nodes in addition to the actual multicast subscribers. By filtering these incorrectly delivered packets at a lower protocol layer (e.g., layer-2 or layer-3), processing cycles at higher protocol layers are avoided. Additionally in one embodiment, class and particulars are deterministically determined (e.g., using a same hashing function) such that services can be discovered and used by subscribing to a corresponding multicast group.

No. of Pages : 29 No. of Claims : 20

(12) PATENT APPLICATION PUBLICATION
(19) INDIA
(22) Date of filing of Application :18/11/2013
(21) Application No.3361/DEL/2013 A
(43) Publication Date : 22/05/2015

(54) Title of the invention : TWENTY-20 CARD CRICKET

(51) International classification :A63F
(31) Priority Document No :NA
(32) Priority Date :NA
(33) Name of priority country :NA
(86) International Application No :NA
Filing Date :NA
(87) International Publication No : NA
(61) Patent of Addition to Application Number :NA
Filing Date :NA
(62) Divisional to Application Number :NA
Filing Date :NA

(71)**Name of Applicant :**
1)SUBODH VARMA
Address of Applicant :816/3, EXPRESS GARDEN, VAIBHAV KHAND, INDIRAPURAM, GHAZIABAD-201010, UTTAR PRADESH, INDIA.
(72)**Name of Inventor :**
1)SUBODH VARMA

(57) Abstract :
The invention relates to a card game to be played between two players or two teams made on the pattern of the field game of 20-20 cricket. It consists of three sets of cards- one set for the Batsmen using 81 cards; another set for Bowlers using 63 cards and a third set of 15 cards marked Appeals. The batsmens cards denote runs or dot balls, bowlers cards denote wickets, no ball, wide ball etc.

No. of Pages : 6 No. of Claims : 3

(12) PATENT APPLICATION PUBLICATION
(19) INDIA
(22) Date of filing of Application :23/04/2014
(21) Application No.3251/DELNP/2014 A
(43) Publication Date : 22/05/2015

(54) Title of the invention : POLYMER BONDED POLYCYCLIC AROMATIC HYDROCARBONS HAVING NITROGEN CONTAINING SUBSTITUENTS

(51) International classification :C09D11/00,C09D11/02,B41M3/14
(31) Priority Document No :PCT/EP2011/069885
(32) Priority Date :10/11/2011
(33) Name of priority country :U.S.A.
(86) International Application No :PCT/EP2012/071449
Filing Date :30/10/2012
(87) International Publication No :WO 2013/068275
(61) Patent of Addition to Application Number :NA
Filing Date :NA
(62) Divisional to Application Number :NA
Filing Date :NA

(71)**Name of Applicant :**
1)SICPA HOLDING SA
Address of Applicant :Av. de Florissant 41 CH 1008 Prilly Switzerland
(72)**Name of Inventor :**
1)PASQUIER Ccile
2)WYSS Patrick

(57) Abstract :
The invention concerns a polymer bonded polycyclic aromatic hydrocarbon compound of general formula (1): (P O) x Q (Y) w (1) wherein P represents a polymeric moiety having at least three repeating units which comprise an optionally substituted phenyl ring; Q represents a perylene quaterrylene or terrylene moiety; Y is selected from (i) halogen and(ii) optionally substituted N heterocycloaliphatic groups having from 3 to about 8 ring members which are bonded to Q through an N atom provided that at least one Y represents(ii); x represents an integer of from 1 to 4; w represents an integer of from 1 to 4. The invention further concerns a process for making such a compound and the use thereof in a printing ink composition which can be used in particular for making marking or security features.

No. of Pages : 47 No. of Claims : 36

(12) PATENT APPLICATION PUBLICATION
(19) INDIA
(22) Date of filing of Application :23/04/2014
(21) Application No.3252/DELNP/2014 A
(43) Publication Date : 22/05/2015

(54) Title of the invention : DEVICE FOR CONTROLLING INTERNAL COMBUSTION ENGINE

(51) International classification :F01N3/023,F01N3/08,G01N15/06
(31) Priority Document No :NA
(32) Priority Date :NA
(33) Name of priority country :NA
(86) International Application No :PCT/JP2011/074679
Filing Date :26/10/2011
(87) International Publication No :WO 2013/061421
(61) Patent of Addition to Application Number :NA
Filing Date :NA
(62) Divisional to Application Number :NA
Filing Date :NA

(71)**Name of Applicant :**
1)TOYOTA JIDOSHA KABUSHIKI KAISHA
Address of Applicant :1 Toyota cho Toyota shi Aichi 4718571 Japan
(72)**Name of Inventor :**
1)HASHIDA Tatsuhiro
2)NISHIJIMA Hiroki

(57) Abstract :
In the exhaust pathway (4) of an internal combustion engine (2) to which the present invention is applied an SCR system (8) is disposed and a microparticle sensor (14) is disposed downstream therefrom. A control device (16) is provided with a temperature control means for controlling the temperature of an element of the microparticle sensor. Here the temperature control means starts detection by the microparticle sensor of the amount of microparticles and then if the integrated value (t) of the time for which the microparticle sensor was used in a specific operating state has reached a baseline time (t1) performs control that increases the temperature of the element of the microparticle sensor to a first temperature region (T1). Here the specific operating state is an operating state set taking into consideration the operation states in which urea related substances are easily discharged downstream of the SCR system (8). Also the first temperature region (T1) is a temperature higher than the temperature at which urea related substances break down and below the temperature at which microparticles are eliminated by combustion.

No. of Pages : 36 No. of Claims : 7

(12) PATENT APPLICATION PUBLICATION
(19) INDIA
(22) Date of filing of Application :23/04/2014
(21) Application No.3253/DELNP/2014 A
(43) Publication Date : 22/05/2015

(54) Title of the invention : AN APPARATUS METHOD AND COMPUTER PROGRAM USING A PROXIMITY DETECTOR

(51) International classification :G06F3/0488,G06F3/044
(31) Priority Document No :13/277922
(32) Priority Date :20/10/2011
(33) Name of priority country :U.S.A.
(86) International Application No :PCT/IB2012/055759
Filing Date :19/10/2012
(87) International Publication No :WO 2013/057721
(61) Patent of Addition to Application Number :NA
Filing Date :NA
(62) Divisional to Application Number :NA
Filing Date :NA

(71)**Name of Applicant :**
1)NOKIA CORPORATION
Address of Applicant :Keilalahdentie 4 FIN 02150 Espoo Finland
(72)**Name of Inventor :**
1)RONKAINEN Sami

(57) Abstract :
An apparatus comprising:at least one proximity detector configured to disambiguate different user actuations proximal to the proximity detector; wherein the apparatus is configured to use the at least one proximity detector in a high definition mode to disambiguate a first set of user actuations and wherein the apparatus is configured to use in response to detection of a first criteria the at least one proximity detector in a low definition mode to disambiguate a second smaller set of user actuations.

No. of Pages : 33 No. of Claims : 44

(12) PATENT APPLICATION PUBLICATION
(19) INDIA
(22) Date of filing of Application :02/01/2015
(21) Application No.34/DELNP/2015 A
(43) Publication Date : 22/05/2015

(54) Title of the invention : PRIMARY RUST PREVENTIVE COATING COMPOSITION AND USE THEREOF

(51) International classification :C09D183/04,B05D7/24,B32B27/18
(31) Priority Document No :2012161685
(32) Priority Date :20/07/2012
(33) Name of priority country :Japan
(86) International Application No :PCT/JP2013/069538
Filing Date :18/07/2013
(87) International Publication No :WO 2014/014063
(61) Patent of Addition to Application Number :NA
Filing Date :NA
(62) Divisional to Application Number :NA
Filing Date :NA

(71)**Name of Applicant :**
1)CHUGOKU MARINE PAINTS LTD.
Address of Applicant :1 7 Meijishinkai Otake shi Hiroshima 7390652 Japan
(72)**Name of Inventor :**
1)OKADA Masamitsu

(57) Abstract :
To provide a primary rust preventive coating composition which is capable of forming a coating film that has an average dry film thickness of 10 µm or less by being dried and cured at room temperature even if a conventional coating machine is used therefor said coating film having excellent rust prevention properties and excellent over coat ability while exhibiting excellent weld ability/cuttability during a welding/cutting process of a steel sheet. [Solution] A primary rust preventive coating composition which is characterized by containing (A) a siloxane based binder that has a weight average molecular weight (Mw) of 1 000 6 000 in terms of standard polystyrene as determined by gel permeation chromatography (GPC) and (B) zinc dust that contains a flake zinc powder (b 1). This primary rust preventive coating composition is also characterized in that: the pigment volume concentration (PVC) is 35 60%; and the mass ratio of the zinc dust (B) to the siloxane based binder (A) in terms of SiO namely (B)/(A) is 1.0 5.0.

No. of Pages : 92 No. of Claims : 14

(12) PATENT APPLICATION PUBLICATION
(19) INDIA
(22) Date of filing of Application :22/04/2014
(21) Application No.3208/DELNP/2014 A
(43) Publication Date : 22/05/2015

(54) Title of the invention : AN AERODIESEL ENGINE

(51) International classification :F02B75/22,B64D27/04,F02B75/00
(31) Priority Document No :61/546391
(32) Priority Date :12/10/2011
(33) Name of priority country :U.S.A.
(86) International Application No :PCT/US2012/059946
Filing Date :12/10/2012
(87) International Publication No :WO 2013/056041
(61) Patent of Addition to Application Number :NA
Filing Date :NA
(62) Divisional to Application Number :NA
Filing Date :NA

(71)**Name of Applicant :**
1)ENGINEERED PROPULSION SYSTEMS INC.
Address of Applicant :150 West First Street New Richmond WI 54017 U.S.A.
(72)**Name of Inventor :**
1)WEINZIERL Steven M.
2)FUCHS Michael J.

(57) Abstract :
The present invention is an aero engine that is provided with compression combustion and weighs less than 725 lbs. The present invention is further a method of forming the aero engine.

No. of Pages : 31 No. of Claims : 16

(12) PATENT APPLICATION PUBLICATION
(19) INDIA
(22) Date of filing of Application :23/04/2014
(21) Application No.3281/DELNP/2014 A
(43) Publication Date : 22/05/2015

(54) Title of the invention : IMPACT DISSIPATING FABRIC

(51) International classification :D03D1/00,B32B5/26,F41H5/04
(31) Priority Document No :61/544351
(32) Priority Date :07/10/2011
(33) Name of priority country :U.S.A.
(86) International Application No :PCT/US2012/058686
Filing Date :04/10/2012
(87) International Publication No :WO 2013/052620
(61) Patent of Addition to Application Number :NA
Filing Date :NA
(62) Divisional to Application Number :NA
Filing Date :NA

(71)**Name of Applicant :**
1)MATSCITECHNO LICENSING COMPANY
Address of Applicant :143 Viburnum Drive Kennett Square PA 19348 U.S.A.
(72)**Name of Inventor :**
1)VITO Robert A.

(57) Abstract :
An first type of impact dissipating fabric system comprises a first fabric layer formed using a first weave pattern and a second fabric layer formed using a second weave pattern different from the first wave pattern. A second type of impact dissipating fabric system comprises a first fabric layer formed with fibers having a first denier and a second fabric layer formed with fibers having a second denier different from the first denier. A third type of impact dissipating fabric comprises a first fabric layer formed using a first weave pattern from fibers having a first denier and a second fabric layer formed using a second weave from fibers having a second denier where at least one of i) the first weave and the second weave are different types of weaves and ii) the first denier and the second denier are different from one another. In each type of system the first and second fabric layers are disposed on one another and coupled together.

No. of Pages : 18 No. of Claims : 19

(12) PATENT APPLICATION PUBLICATION
(19) INDIA
(22) Date of filing of Application :18/11/2013
(21) Application No.3358/DEL/2013 A
(43) Publication Date : 22/05/2015

(54) Title of the invention : A SOLID CATALYST COMPOSITION AND A PROCESS FOR ITS PREPARATION.

(51) International classification :C11C
(31) Priority Document No :NA
(32) Priority Date :NA
(33) Name of priority country :NA
(86) International Application No :NA
Filing Date :NA
(87) International Publication No : NA
(61) Patent of Addition to Application Number :NA
Filing Date :NA
(62) Divisional to Application Number :NA
Filing Date :NA

(71)**Name of Applicant :**
1)THAPAR UNIVERSITY
Address of Applicant :BHADSON ROAD, PATIALA 147004 PUNJAB India
(72)**Name of Inventor :**
1)ALI AMJAD
2)KUMAR DINESH

(57) Abstract :
The present disclosure provides a solid nanocrystalline catalyst composition comprising calcium oxide dispersed with a catalytically active metal, in an oxidized form. The amount of the catalytically active metal dispersed in calcium oxide ranges from 0.25-10 wt% of the calcium oxide mass. The solid nanocrystalline catalyst composition of the present disclosure is used for the preparation of fatty acid amides and fatty acid methyl esters from a variety of triglycerides.

No. of Pages : 34 No. of Claims : 12

(12) PATENT APPLICATION PUBLICATION
(21) Application No.3359/DEL/2013 A
(19) INDIA
(22) Date of filing of Application :18/11/2013
(43) Publication Date : 22/05/2015

(54) Title of the invention : NETHOD OF REGRESSION ANALYSIS FOR SOFTWARE MAINTENANCE THROUGH OUT ITS LIFECYCLE

(51) International classification :G08F
(31) Priority Document No :NA
(32) Priority Date :NA
(33) Name of priority country :NA
(86) International Application No :NA
Filing Date :NA
(87) International Publication No : NA
(61) Patent of Addition to Application Number :NA
Filing Date :NA
(62) Divisional to Application Number :NA
Filing Date :NA

(71)**Name of Applicant :**
1)GUPTA, ANKUR
Address of Applicant :MODEL INSTITUTE OF EDUCATION & RESEARCH (MIET) BC ROAD, JAMMU 18001, INDIA Jammu & Kashmir India
(72)**Name of Inventor :**
1)GUPTA, ANKUR
2)SHAMIM, SHAFQAT

(57) Abstract :
This invention provides method to measure, report and take corrective action on the software application performance degradation over a period of time due to introduction of new features, feature enhancements, bugs-fixes and other scalability issues. Critical Applications cannot afford the performance degradation. However, teams engaged in software maintenance are not too effective in detecting potential performance impacting issues during the test and release phases of the software engineering process, since the run-time environments for individual customers are difficult to simulate. Application baselining is a framework which provides indication of realtime application performance by monitoring its critical parameters over long periods of time. By keeping track of the changes made to the application and its environment, their impact on application performance can be determined. The changes which adversely impact the application performance can then be rolled-back to mitigate their effect.

No. of Pages : 18 No. of Claims : 9

(12) PATENT APPLICATION PUBLICATION
(19) INDIA
(22) Date of filing of Application :13/01/2012
(21) Application No.358/DELNP/2012 A
(43) Publication Date : 22/05/2015

(54) Title of the invention : THERMAL SWITCH

(51) International classification :B23B
(31) Priority Document No :0912304.3
(32) Priority Date :15/07/2009
(33) Name of priority country :U.K.
(86) International Application No :PCT/EP2010/004328
Filing Date :15/07/2010
(87) International Publication No : NA
(61) Patent of Addition to Application Number :NA
Filing Date :NA
(62) Divisional to Application Number :NA
Filing Date :NA

(71)**Name of Applicant :**
1)VISHAY RESISTORS BELGIUM BVBA
Address of Applicant :Rue des Deux Maisons 37 B-1140 Bruxelles (Evere) Belgium
(72)**Name of Inventor :**
1)VAN BENEDEN Bruno

(57) Abstract :
A thermal switch comprises a first and second electrically conducting terminals and a pre-stressable electrically conducting connecting device such as a compression spring member. The connecting device in a com-pressed state contacts at most one of the first and second terminals and in a released state electrically connects the first and second terminals. The thermal switch further comprises a retainer device retaining the con-necting device in the compressed state. The retainer device comprises a retaining material that melts at or above a predetermined temperature for releasing the connecting device into the released state. In the compressed state of the connecting device the first and second terminals are electri-cally insulated from each other by a hollow space formed between the connecting device and at least one of the first and second terminals.

No. of Pages : 17 No. of Claims : 14

(12) PATENT APPLICATION PUBLICATION
(19) INDIA
(22) Date of filing of Application :21/04/2014
(21) Application No.3141/DELNP/2014 A
(43) Publication Date : 22/05/2015

(54) Title of the invention : APPARATUS AND METHOD FOR PROVIDING PROTECTION IN A PASSIVE OPTICAL NETWORK

(51) International classification :H04Q11/00,H04B10/272
(31) Priority Document No :13/293369
(32) Priority Date :10/11/2011
(33) Name of priority country :U.S.A.
(86) International Application No :PCT/US2012/063347
Filing Date :02/11/2012
(87) International Publication No :WO 2013/070525
(61) Patent of Addition to Application Number :NA
Filing Date :NA
(62) Divisional to Application Number :NA
Filing Date :NA

(71)**Name of Applicant :**
1)ALCATEL LUCENT
Address of Applicant :3 avenue Octave Grard F 75007 Paris France
(72)**Name of Inventor :**
1)SMITH Joseph L.
2)HERON Ronald
3)HARSTEAD Edward E.
4)VETTER Peter

(57) Abstract :
An apparatus and method for cost effectively providing protection in a PON. Protection ports usually on a protection LT card are configured to communicate with a selectable one of the downstream ODN splitter/combiners associated with the primary ports on the remaining LT cards of the OLT. Each protection port includes at least a splitter for distributing a transmitted signal from a light source to a plurality of switched protection fibers and may have an optical amplifier to provide for lossless or low loss distribution. Each port may also have a combiner for combining received signals from a plurality of switched protection fibers. When a failure is detected at a primary port traffic is re directed from the primary port to the protection port after the protection port has been configured to communicate with the same ODN splitter/combiner as the failed primary port.

No. of Pages : 27 No. of Claims : 10

(12) PATENT APPLICATION PUBLICATION
(19) INDIA
(22) Date of filing of Application :21/04/2014
(21) Application No.3142/DELNP/2014 A
(43) Publication Date : 22/05/2015

(54) Title of the invention : AGRICULTURAL FORMULATIONS WITH AMIDES AND ACYL MORPHOLINES

(51) International classification :A01N25/02,A01N51/00,A01N43/90
(31) Priority Document No :11190506.3
(32) Priority Date :24/11/2011
(33) Name of priority country :EPO
(86) International Application No :PCT/EP2012/073368
Filing Date :22/11/2012
(87) International Publication No :WO 2013/076200
(61) Patent of Addition to Application Number :NA
Filing Date :NA
(62) Divisional to Application Number :NA
Filing Date :NA

(71)**Name of Applicant :**
1)AKZO NOBEL CHEMICALS INTERNATIONAL B.V.
Address of Applicant :Stationsstraat 77 NL 3811 MH Amersfoort Netherlands
(72)**Name of Inventor :**
1)WESTBYE Peter
2)HAMMARSTRAND Karin
3)ANDERSSON Martina

(57) Abstract :
A formulation is provided comprising a) at least one agriculturally active ingredient; b) at least one amide of formula (I) wherein R1 is selected from the group consisting of a non aromatic hydrocarbyl group having from 1 to 16 carbon atom and benzyl; R2 is selected from the group consisting of a hydrocarbyl group having from 1 to 4 carbon atoms and benzyl; and R3 is selected from the group consisting of hydrogen and a hydrocarbyl group having from 1 to 16 carbon atoms and c) at least one acyl morpholine according to the formula (II) wherein R is H CH or CH. A method for treating a plant or seed with such formulation is also provided.

No. of Pages : 20 No. of Claims : 17

(12) PATENT APPLICATION PUBLICATION
(19) INDIA
(22) Date of filing of Application :22/04/2014
(21) Application No.3216/DELNP/2014 A
(43) Publication Date : 22/05/2015

(54) Title of the invention : DISPERSANT COMPOSITION

(51) International classification :C09B67/00,C09D7/02,C09D17/00
(31) Priority Document No :61/551682
(32) Priority Date :26/10/2011
(33) Name of priority country :U.S.A.
(86) International Application No :PCT/US2012/061805
Filing Date :25/10/2012
(87) International Publication No :WO 2013/063199
(61) Patent of Addition to Application Number :NA
Filing Date :NA
(62) Divisional to Application Number :NA
Filing Date :NA

(71)**Name of Applicant :**
1)LUBRIZOL ADVANCED MATERIALS INC.
Address of Applicant :9911 Brecksville Road Cleveland Ohio 44141 3247 U.S.A.
(72)**Name of Inventor :**
1)SUNDERLAND Patrick J.
2)THETFORD Dean
3)COULBECK Elliot
4)RICHARDS Stuart N.

(57) Abstract :
A composition comprising particulate solid (typically a pigment or filler) an organic medium (typically the organic medium may be a plastics material or an organic liquid) and a polyacrylic copolymer.

No. of Pages : 39 No. of Claims : 24

(12) PATENT APPLICATION PUBLICATION
(21) Application No.3219/DELNP/2014 A
(19) INDIA
(22) Date of filing of Application :22/04/2014
(43) Publication Date : 22/05/2015

(54) Title of the invention : CONTROL DEVICE FOR DIESEL ENGINE WITH TURBOSUPERCHARGER

(51) International classification :F02D23/00,F02D21/10
(31) Priority Document No :NA
(32) Priority Date :NA
(33) Name of priority country :NA
(86) International Application No :PCT/JP2011/075479
Filing Date :04/11/2011
(87) International Publication No :WO 2013/065186
(61) Patent of Addition to Application Number :NA
Filing Date :NA
(62) Divisional to Application Number :NA
Filing Date :NA

(71)**Name of Applicant :**
1)TOYOTA JIDOSHA KABUSHIKI KAISHA
Address of Applicant :1 Toyota cho Toyota shi Aichi 4718571 Japan
(72)**Name of Inventor :**
1)IBUKI Taku

(57) Abstract :
This control device calculates a steady state target value that is the target value of supercharging pressure during a steady operation on the basis of the engine RPM and fuel injection quantity and operates an actuator by feedback control such that the actual supercharging pressure calculated from the signal of a supercharging pressure sensor approaches the steady state target value. However when any condition among a plurality of different conditions that are likely to be met during a transient operation is met the transient target value of supercharging pressure suitable for the met condition is calculated in accordance with a calculation rule prepared for each of the conditions. On this occasion if one transient target value is present this transient target value is selected and if a plurality of transient target values are present simultaneously one transient target value is selected in accordance with priorities determined according to acceleration. Then the target value of feedback control is changed from the steady state target value to the selected transient target value.

No. of Pages : 40 No. of Claims : 4

(12) PATENT APPLICATION PUBLICATION
(19) INDIA
(22) Date of filing of Application :13/01/2012
(21) Application No.359/DELNP/2012 A
(43) Publication Date : 22/05/2015

(54) Title of the invention : A STABLE PHARMACEUTICAL OMEPRAZOLE FORMULATION FOR ORAL ADMINISTRATION

(51) International classification :A61K 31/4439
(31) Priority Document No :61/226,890
(32) Priority Date :20/07/2009
(33) Name of priority country :U.S.A.
(86) International Application No :PCT/US2010/042508
Filing Date :20/07/2010
(87) International Publication No :WO 2011/011351
(61) Patent of Addition to Application Number :NA
Filing Date :NA
(62) Divisional to Application Number :NA
Filing Date :NA

(71)**Name of Applicant :**
1)VETEGEN LLC
Address of Applicant :674 UNIONVILLE ROAD, SUITE 105, KENNETT SQUARE, PENNSYLVANIA 19348, UNITED STATES OF AMERICA
(72)**Name of Inventor :**
1)ERIK JUVONEN
2)LOUIS MASSIMO MICOLUCCI

(57) Abstract :
The present invention is directed to a pharmaceutical solution or syrup formulation for oral administration comprising; omeprazole, a solubilizing agent, a sweetening agent, a flavoring agent, and an antioxidant.

No. of Pages : 33 No. of Claims : 44

(12) PATENT APPLICATION PUBLICATION
(19) INDIA
(22) Date of filing of Application :23/04/2014
(21) Application No.3242/DELNP/2014 A
(43) Publication Date : 22/05/2015

(54) Title of the invention : MULTI LAYER BODIES MADE OF POLYCARBONATE WITH A DEEP GLOSS EFFECT

(51) International classification :C08J3/22,B32B27/20,C09D183/04
(31) Priority Document No :11191312.5
(32) Priority Date :30/11/2011
(33) Name of priority country :EPO
(86) International Application No :PCT/EP2012/073713
Filing Date :27/11/2012
(87) International Publication No :WO 2013/079478
(61) Patent of Addition to Application Number :NA
Filing Date :NA
(62) Divisional to Application Number :NA
Filing Date :NA

(71)**Name of Applicant :**
1)BAYER INTELLECTUAL PROPERTY GMBH
Address of Applicant :Alfred Nobel Str. 10 40789 Monheim Germany
(72)**Name of Inventor :**
1)MEYER Alexander
2)CAPELLEN Peter
3)REICHENAUER Jrg
4)RUDOLF Reiner
5)SEIDEL Andreas
6)THIEM Hans J¼rgen

(57) Abstract :
Multi layer bodies comprising: 1) a base layer containing at least one thermoplastic; nanoscale carbon particulate matter in a quantity of 0.05 to 0.15 wt. %; a release agent on the basis of a fatty acid ester in a concentration from 0.1 to 0.5 wt. % 2); at least on one side of the base layer a polysiloxane based scratch proof coating with a thickness of 2 to 15 µm containing at least one UV absorber wherein the values of the components of the base layer mentioned above add up to 100 wt. %.

No. of Pages : 31 No. of Claims : 14

(12) PATENT APPLICATION PUBLICATION
(19) INDIA
(22) Date of filing of Application :23/04/2014
(21) Application No.3243/DELNP/2014 A
(43) Publication Date : 22/05/2015

(54) Title of the invention : ARRANGEMENT FOR FITTING AN EXHAUST CLEANING UNIT IN AN EXHAUST PASSAGE

(51) International classification :F01N3/021,F01N13/18,F01N3/28
(31) Priority Document No :11511094
(32) Priority Date :22/11/2011
(33) Name of priority country :Sweden
(86) International Application No :PCT/SE2012/051238
Filing Date :13/11/2012
(87) International Publication No :WO 2013/077797
(61) Patent of Addition to Application Number :NA
Filing Date :NA
(62) Divisional to Application Number :NA
Filing Date :NA

(71)**Name of Applicant :**
1)SCANIA CV AB
Address of Applicant :S 151 87 Sdertlje Sweden
(72)**Name of Inventor :**
1)BUCKSCH Ragnar
2)GRANQVIST Gran

(57) Abstract :
The present invention relates to an arrangement for fitting an exhaust cleaning unit (2) in an exhaust passage (1b). The arrangement comprises an annular resilient component (7) which is fitted round the exhaust cleaning unit (2) at a distance from the gasket (5). The annular resilient component (7) has a first contact portion (7a) adapted to coming into contact with a wall surface (3) of the exhaust cleaning unit (2) and a second contact portion (7b) adapted to coming into contact with a wall surface (1b) of the exhaust passage when the exhaust cleaning unit (2) is in a fitted state in the exhaust passage and that the annular resilient component (7) has the characteristic of keeping the exhaust cleaning unit (2) in a centred position in the exhaust passage with a spring force.

No. of Pages : 14 No. of Claims : 6

(12) PATENT APPLICATION PUBLICATION
(21) Application No.3244/DELNP/2014 A
(19) INDIA
(22) Date of filing of Application :23/04/2014
(43) Publication Date : 22/05/2015

(54) Title of the invention : FIXED CONSTANT VELOCITY UNIVERSAL JOINT

(51) International classification :F16D3/223
(31) Priority Document No :2011246216
(32) Priority Date :10/11/2011
(33) Name of priority country :Japan
(86) International Application No :PCT/JP2012/077060
Filing Date :19/10/2012
(87) International Publication No :WO 2013/069434
(61) Patent of Addition to Application Number :NA
Filing Date :NA
(62) Divisional to Application Number :NA
Filing Date :NA

(71)**Name of Applicant :**
1)NTN CORPORATION
Address of Applicant :3 17 Kyomachibori 1 chome Nishi ku Osaka shi Osaka 5500003 Japan
(72)**Name of Inventor :**
1)HIRUKAWA Hiroyasu
2)YAMAZAKI Kenta
3)YAMAZAKI Kisao

(57) Abstract :
A fixed constant velocity universal joint (1) characterized in that: the track grooves of an outside joint member comprise first track groove parts (7a) located toward the interior and second track groove parts (7b) located toward the opening; the first track groove parts (7a) are formed having arc shaped ball trajectory central lines (Xa) the center of curvature of which has no offset in the axial direction with respect to the joint center (O) with the plane (M) containing at least the ball trajectory central lines (Xa) and the joint center (O) being inclined with respect to the joint axis line (N N) and the direction of inclination thereof being in the opposite direction at the adjacent first track groove parts (7a) in the circumferential direction; when the ball trajectory central lines (Xb) of the second track groove parts (7b) are projected on the planes (M) the ball trajectory central lines (Xb) have a linear portion and this linear portion is formed inclined such that this linear portion approaches the joint axis line (N N) as this linear portion runs toward the opening side; the end part (A) of the ball trajectory central lines (Xa) of the first track groove parts (7a) is located closer to the opening side from the joint center (O) in the axial direction and the ball trajectory central lines (Xb) of the second track groove parts (7b) are connected to this end part (A); and with a plane (P) containing the joint center (O) as the reference when the operating angle is 0° the ball trajectory central lines (Y) of the track grooves of an inside joint member are formed so as to be mirror symmetric with respect to the ball trajectory central lines (X) of the track grooves of the outside joint member with which a track groove pair is formed.

No. of Pages : 73 No. of Claims : 10

(12) PATENT APPLICATION PUBLICATION
(21) Application No.36/DELNP/2015 A
(19) INDIA
(22) Date of filing of Application :02/01/2015
(43) Publication Date : 22/05/2015

(54) Title of the invention : EXHAUST HEAT RECOVERY POWER GENERATION PLANT FOR SINTERING FACILITY

(51) International classification	:F01K27/02,C22B1/20,F01K7/18
(31) Priority Document No	:NA
(32) Priority Date	:NA
(33) Name of priority country	:NA
(86) International Application No	:PCT/JP2012/066907
Filing Date	:02/07/2012
(87) International Publication No	:WO 2014/006677
(61) Patent of Addition to Application Number	:NA
Filing Date	:NA
(62) Divisional to Application Number	:NA
Filing Date	:NA

(71)**Name of Applicant :**
1)KAWASAKI JUKOGYO KABUSHIKI KAISHA
Address of Applicant :1 1 Higashikawasaki cho 3 chome Chuo ku Kobe shi Hyogo 6508670 Japan
(72)**Name of Inventor :**
1)KAMAZAWA Kazuto
2)OHASHI Toshiki
3)TAKIMOTO Tomoji
4)YASUHARA Katsuki

(57) Abstract :
To provide an exhaust heat recovery power generation plant for a sintering facility in which it becomes possible to effectively recover exhaust heat from a sintering device in addition to a sintered ore cooler while controlling the sulfation of anhydrous sulfuric acid droplets included in the exhaust gas of the sintering device. [Solution] An SM boiler (10) heats all or part of the hot water generated by an SC boiler (30) by introducing the high temperature portion of exhaust gas from a sintering device (1). At this point the temperature of the hot water supplied to the SM boiler (10) is controlled so as to maintain the temperature of the exhaust gas in the exhaust gas outlet of the SM boiler (10) above the acid dew point.

No. of Pages : 44 No. of Claims : 12

(12) PATENT APPLICATION PUBLICATION
(21) Application No.3159/DELNP/2014 A
(19) INDIA
(22) Date of filing of Application :21/04/2014
(43) Publication Date : 22/05/2015

(54) Title of the invention : ELECTROMAGNETIC ENERGY FLUX REACTOR

(51) International classification :H02J5/00
(31) Priority Document No :NA
(32) Priority Date : -
(33) Name of priority country :
(86) International Application No :PCT/PH2011/000015
Filing Date :23/09/2011
(87) International Publication No :WO 2013/043065
(61) Patent of Addition to Application Number :NA
Filing Date :NA
(62) Divisional to Application Number :NA
Filing Date :NA

(71)**Name of Applicant :**
1)EYALES Bonifacio J.
Address of Applicant :15B Duero St. Vista Verde Executive Village Cainta Rizal Phillipines
(72)**Name of Inventor :**
1)EYALES Bonifacio J.

(57) Abstract :
The (EER) comprises microprocessor based power modules (MPM) a microprocessor base control module (MCM) Hall Effect current sensors (HECS) and a reactor system (RS). Upon switching the exciter power supply source the power module activates the EER to a bypass mode due to zero current pick up by the HECS. The exciter power supply source is supplied either by a utility company standby generator battery banks with inverter or by wind and solar renewable energy coupled to an inverter or by any means of excitation sources of alternating current waveform. Upon switching on the load the HECS senses the current at the output terminal either directly from the terminal lead wire or via the secondary output of the current transformer installed in the output terminal lead wire. Once the minimum preset output current signal is sensed by the HECS it will activate and power up the reactor system.

No. of Pages : 29 No. of Claims : 10

(12) PATENT APPLICATION PUBLICATION
(19) INDIA
(22) Date of filing of Application :23/04/2014
(21) Application No.3230/DELNP/2014 A
(43) Publication Date : 22/05/2015

(54) Title of the invention : DISPENSER

(51) International classification :A61M15/00
(31) Priority Document No :1118845.5
(32) Priority Date :01/11/2011
(33) Name of priority country :U.K.
(86) International Application No :PCT/GB2012/052709
Filing Date :31/10/2012
(87) International Publication No :WO 2013/064821
(61) Patent of Addition to Application Number :NA
Filing Date :NA
(62) Divisional to Application Number :NA
Filing Date :NA

(71)**Name of Applicant :**
1)EURO CELTIQUE S.A.
Address of Applicant :2 avenue Charles de Gaulle L 1653 Luxembourg
(72)**Name of Inventor :**
1)DUIGNAN Cathal
2)McDERMENT Iain Grierson

(57) Abstract :
The present invention relates to dispensers in particular to dispensers for dispensing a dose of a gaseous gas borne or droplet substance from a substance source and dispensers comprising dosage counters. The present invention therefore provides: a dispenser for dispensing a dose of a gaseous gas borne or droplet substance from a substance source (C) the dispenser comprising: a body for receiving a substance source the body having a mouthpiece; a junction member slideably arranged in the body for movement in a longitudinal axis of the body to release a dose of a substance from a substance source the junction member comprising a socket for receiving a spout of a substance source; a dispenser driver (A) for moving the junction member in the longitudinal axis of the body to release a dose of a substance from a substance source the dispenser driver comprising a pivot shaft and a cam arranged on the shaft the dispenser driver being arranged within the body such that rotation of the pivot shaft causes the cam to rotate and apply a force to the junction member so as to move the junction member in the longitudinal axis; and a cam follower slideably arranged within the body the cam follower comprising a base and a substantially rigid protrusion extending from the base the protrusion being arranged between the dispenser driver and the junction member such that a force applied by the cam of the dispenser driver to the protrusion causes the cam follower to slideably move in the longitudinal axis of the body and apply a force to the junction member so as to release a dose of a substance from a substance source.

No. of Pages : 65 No. of Claims : 42

(12) PATENT APPLICATION PUBLICATION
(19) INDIA
(22) Date of filing of Application :12/01/2012
(21) Application No.338/DELNP/2012 A
(43) Publication Date : 22/05/2015

(54) Title of the invention : METHODS FOR PURIFYING A TARGET PROTEIN FROM ONE OR MORE IMPURITIES IN A SAMPLE

(51) International classification :C07K 16/00
(31) Priority Document No :61/273,709
(32) Priority Date :07/08/2009
(33) Name of priority country :U.S.A.
(86) International Application No :PCT/US2010/044539
Filing Date :05/08/2010
(87) International Publication No :WO 2010/017514
(61) Patent of Addition to Application Number :NA
Filing Date :NA
(62) Divisional to Application Number :NA
Filing Date :NA

(71)**Name of Applicant :**
1)MILLIPORE CORPORATION
Address of Applicant :290 CONCORD ROAD, BILLERICA, MASSACHUSETTS 01821, UNITED STATES OF AMERICA U.S.A.
(72)**Name of Inventor :**
1)NEIL SOICE
2)DANA HUBBARD
3)YU ZHANG
4)JAMES HARMZIK

(57) Abstract :
The present invention relates, at least in part, to improved methods of protein purification. In particular, the present invention relates, at least in part, to methods for purifying an Fc region containing protein from a composition comprising the Fc region containing protein and one or more impurities, where the methods eliminate the need for a holding tank and/or a buffer exchange step.

No. of Pages : 69 No. of Claims : 22

(12) PATENT APPLICATION PUBLICATION
(21) Application No.361/DELNP/2012 A
(19) INDIA
(22) Date of filing of Application :13/01/2012
(43) Publication Date : 22/05/2015

(54) Title of the invention : METHOD FOR MANUFACTURING SPILANTHOL AND INTERMEDIATE MANUFACTURING PRODUCT THEREFOR

(51) International classification :C07C 235/28
(31) Priority Document No :2009-165530
(32) Priority Date :14/07/2009
(33) Name of priority country :Japan
(86) International Application No :PCT/JP2010/061912
Filing Date :14/07/2010
(87) International Publication No :WO 2011/007807
(61) Patent of Addition to Application Number :NA
Filing Date :NA
(62) Divisional to Application Number :NA
Filing Date :NA

(71)**Name of Applicant :**
1)TAKASAGO INTERNATIONAL CORPORATION
Address of Applicant :37-1, KAMATA 5-CHOME, OHTA-KU, TOKYO 1448721 JAPAN
(72)**Name of Inventor :**
1)SHIGERU TANAKA
2)KENYA ISHIDA
3)KENJI YAGI
4)HIDEO UJIHARA

(57) Abstract :
Provided is an amide ester that is useful as an intermediate manufacturing product for an aroma compound such as spilanthol or the like. Also provided is a spilanthol manufacturing method using said amide ester. High-purity spilanthol can be manufactured by reacting an amide ester represented by general formula (1) with a basic compound. (In the formula, R1 represents a phenyl group that may be substituted with a C1-6 alkyl group and either a C1-4 alkyl group, a C1-4 alkoxy group, or a halogen atom; R2 represents a C1-8 hydrocarbon group; and the wavy lines represent cis configurations, trans configurations, or a mixture of the two configurations.)

No. of Pages : 23 No. of Claims : 6

(12) PATENT APPLICATION PUBLICATION
(19) INDIA
(22) Date of filing of Application :23/04/2014
(21) Application No.3273/DELNP/2014 A
(43) Publication Date : 22/05/2015

(54) Title of the invention : PAPER SHEET PROCESSING DEVICE

(51) International classification :G07D9/00
(31) Priority Document No :NA
(32) Priority Date :NA
(33) Name of priority country :NA
(86) International Application No :PCT/JP2011/006042
Filing Date :28/10/2011
(87) International Publication No :WO 2013/061379
(61) Patent of Addition to Application Number :NA
Filing Date :NA
(62) Divisional to Application Number :NA
Filing Date :NA

(71)**Name of Applicant :**
1)HITACHI OMRON TERMINAL SOLUTIONS CORP.
Address of Applicant :6 3 Osaki 1 chome Shinagawa ku Tokyo 1418576 Japan
(72)**Name of Inventor :**
1)MIZUNO Sho
2)AOJI Hirokazu
3)NAKATA Yasuhiro

(57) Abstract :
A banknote processing unit (10) is provided with a housing (102) a banknote processing unit (10) and a banknote storage unit (30) which are housed within the housing (102) and a unit guide mechanism (50). The unit guide mechanism (50) is provided with a first guide unit (152) disposed horizontally along an inner wall of the housing (102) a first guided unit (162) disposed at an outer wall side of the banknote processing unit (10) and a first coupling mechanism (164). The first coupling mechanism (164) has a first distance adjusting unit (168) which modifies the distance between the first guided unit (162) and the banknote processing unit (10) when force in the horizontal direction is received as a result of movement of the banknote processing unit (10).

No. of Pages : 62 No. of Claims : 5

(12) PATENT APPLICATION PUBLICATION
(19) INDIA
(22) Date of filing of Application :23/04/2014
(21) Application No.3274/DELNP/2014 A
(43) Publication Date : 22/05/2015

(54) Title of the invention : SEMICONDUCTOR DEVICE

(51) International classification :H01L29/786,H01L21/336,H01L21/477
(31) Priority Document No :2011227022
(32) Priority Date :14/10/2011
(33) Name of priority country :Japan
(86) International Application No :PCT/JP2012/076563
Filing Date :05/10/2012
(87) International Publication No :WO 2013/054933
(61) Patent of Addition to Application Number :NA
Filing Date :NA
(62) Divisional to Application Number :NA
Filing Date :NA

(71)**Name of Applicant :**
1)SEMICONDUCTOR ENERGY LABORATORY CO. LTD.
Address of Applicant :398 Hase Atsugi shi Kanagawa 2430036 Japan
(72)**Name of Inventor :**
1)HONDA Tatsuya
2)TSUBUKU Masashi
3)NONAKA Yusuke
4)SHIMAZU Takashi
5)YAMAZAKI Shunpei

(57) Abstract :
The concentration of impurity elements included in an oxide semiconductor film in the vicinity of a gate insulating film is reduced. Further crystallinity of the oxide semiconductor film in the vicinity of the gate insulating film is improved. A semiconductor device includes an oxide semiconductor film over a substrate a source electrode and a drain electrode over the oxide semiconductor film a gate insulating film which includes an oxide containing silicon and is formed over the oxide semiconductor film and a gate electrode over the gate insulating film. The oxide semiconductor film includes a region in which the concentration of silicon is lower than or equal to 1.0 at.% and at least the region includes a crystal portion.

No. of Pages : 87 No. of Claims : 18

(12) PATENT APPLICATION PUBLICATION
(19) INDIA
(22) Date of filing of Application :23/04/2014
(21) Application No.3276/DELNP/2014 A
(43) Publication Date : 22/05/2015

(54) Title of the invention : ANTI FRAUD DEVICE

(51) International classification :G06K9/00
(31) Priority Document No :11/59678
(32) Priority Date :25/10/2011
(33) Name of priority country :France
(86) International Application No :PCT/EP2012/070973
Filing Date :23/10/2012
(87) International Publication No :WO 2013/060681
(61) Patent of Addition to Application Number :NA
Filing Date :NA
(62) Divisional to Application Number :NA
Filing Date :NA

(71)**Name of Applicant :**
1)MORPHO
Address of Applicant :11 boulevard Gallieni F 92130 Issy les Moulineaux France
(72)**Name of Inventor :**
1)PICARD Sylvaine
2)THIEBOT Alain

(57) Abstract :
The invention relates to an anti fraud device (100) for validating the use of a real part of the body as a fingerprint bearing substrate (150) said device comprising: a control unit (106); a sensor (102) intended to capture the image of a fingerprint borne by the substrate (150) placed on the sensor (102); a movement module (104) on which the sensor (102) is mounted and which is intended to move the sensor (102); an analysis module (108) intended to receive data representative of a fingerprint image captured before the sensor (102) is moved and a fingerprint image captured after the sensor (102) is moved and to analyse same; and a decision making module (110) intended to make a decision concerning whether the substrate (150) is a real part of a body or not using the information transmitted by the analysis module (108).

No. of Pages : 17 No. of Claims : 6

(12) PATENT APPLICATION PUBLICATION
(21) Application No.3349/DEL/2013 A
(19) INDIA
(22) Date of filing of Application :14/11/2013
(43) Publication Date : 22/05/2015

(54) Title of the invention : PROCESS FOR THE PREPARATION OF 3-(2-BROMO-4,5-DIMETHOXYBENZENE)PROPIONITRILE

(51) International classification :A61Q
(31) Priority Document No :NA
(32) Priority Date :NA
(33) Name of priority country :NA
(86) International Application No :NA
Filing Date :NA
(87) International Publication No : NA
(61) Patent of Addition to Application Number :NA
Filing Date :NA
(62) Divisional to Application Number :NA
Filing Date :NA

(71)**Name of Applicant :**
1)Ind-Swift Laboratories Limited
Address of Applicant :Ind-Swift Laboratories Limited, E-5, Phase-II, Industrial Area, MOHALI-160055 Punjab, India
(72)**Name of Inventor :**
1)NAIK RAJESH VINODRAI
2)SARIN GURDEEP SINGH
3)GUPTA PRANAV
4)SINGH DILPREET

(57) Abstract :
The present invention relates to an efficient and industrially advantageous process for preparation of 3-(2-bromo-4,5-dimethoxybenzene)propionitrile of formula I, with high purity and high yield,wherein compound of formula I is an important precursor of 1-cyano-4,5- dimethoxybenzocyclobutane, a key intermediate in the preparation of ivabradine or its pharmaceutically acceptable salts thereof.

No. of Pages : 27 No. of Claims : 10

(12) PATENT APPLICATION PUBLICATION
(19) INDIA
(22) Date of filing of Application :02/01/2015
(21) Application No.38/DELNP/2015 A
(43) Publication Date : 22/05/2015

(54) Title of the invention : NONWOVEN MATERIALS CONTAINING CHLORHEXIDINE ACETATE AND TRICLOSAN

(51) International classification :A61L31/16
(31) Priority Document No :61/663748
(32) Priority Date :25/06/2012
(33) Name of priority country :U.S.A.
(86) International Application No :PCT/US2013/032506
Filing Date :15/03/2013
(87) International Publication No :WO 2014/003858
(61) Patent of Addition to Application Number :NA
Filing Date :NA
(62) Divisional to Application Number :NA
Filing Date :NA

(71)**Name of Applicant :**
1)ALLEGIANCE CORPORATION
Address of Applicant :1430 Waukegan Road McGaw Park Illinois 60085 U.S.A.
(72)**Name of Inventor :**
1)ISSAC Walter H.
2)RAYBURN ZAMMIELLO Lori
3)PETROV Katia
4)WEGENER Sara

(57) Abstract :
This invention provides medical articles having antimicrobial efficacy and good barrier properties. In particular the medical articles comprise a nonwoven material and a coating comprising chlorhexidine acetate and triclosan. The present invention is directed to articles comprising a material such as a nonwoven material and a coating comprising chlorhexidine acetate and triclosan. The articles are preferably medical articles such as gowns shoe covers drapes wraps and caps. A coating having a combination of chlorhexidine acetate and triclosan on a material such as a nonwoven material has been found to provide effective fast acting antimicrobial activity while minimally affecting the barrier properties of the material.

No. of Pages : 14 No. of Claims : 6

(12) PATENT APPLICATION PUBLICATION
(19) INDIA
(22) Date of filing of Application :23/04/2014
(21) Application No.3232/DELNP/2014 A
(43) Publication Date : 22/05/2015

(54) Title of the invention : METHOD FOR PRODUCING DRY GROUND CALCIUM CARBONATE FOR USE IN THERMOSET POLYESTER RESIN SYSTEMS

(51) International classification :C08K3/26,C08L33/02,C08L67/00
(31) Priority Document No :13/289006
(32) Priority Date :04/11/2011
(33) Name of priority country :U.S.A.
(86) International Application No :PCT/US2012/062372
Filing Date :29/10/2012
(87) International Publication No :WO 2013/066794
(61) Patent of Addition to Application Number :NA
Filing Date :NA
(62) Divisional to Application Number :NA
Filing Date :NA

(71)**Name of Applicant :**
1)SPECIALTY MINERALS (MICHIGAN) INC.
Address of Applicant :30600 Telegraph Road Bingham Farms MI 48025 U.S.A.
(72)**Name of Inventor :**
1)HUCALUK Brandon Keith
2)FINN III John Lawrence

(57) Abstract :
A dry ground calcium carbonate filler or additive made by dry grinding calcium carbonate in the presence of an organo amine and then surface treating the ground calcium carbonate with a dispersant and the method of making the same is disclosed. Dry ground calcium carbonate filler or additive made by dry grinding calcium carbonate in the presence of an organo amine such as triethanolamine and then surface treating the ground calcium carbonate with a dispersant such as sodium polyacrylate when added to a polyester polymer composition yields a lower viscosity of the polymer system than without the addition of triethanolamine followed by surface treating the ground calcium carbonate with a dispersant.

No. of Pages : 25 No. of Claims : 24

(12) PATENT APPLICATION PUBLICATION
(19) INDIA
(22) Date of filing of Application :23/04/2014
(21) Application No.3233/DELNP/2014 A
(43) Publication Date : 22/05/2015

(54) Title of the invention : SYRINGE WITH DISINFECTING TIP FEATURE

(51) International classification :A61M39/14,A61M39/16
(31) Priority Document No :13/250097
(32) Priority Date :30/09/2011
(33) Name of priority country :U.S.A.
(86) International Application No :PCT/US2012/054787
Filing Date :12/09/2012
(87) International Publication No :WO 2013/048731
(61) Patent of Addition to Application Number :NA
Filing Date :NA
(62) Divisional to Application Number :NA
Filing Date :NA

(71)**Name of Applicant :**
1)BECTON DICKINSON AND COMPANY
Address of Applicant :1 Becton Drive MC 110 Franklin Lakes New Jersey 07417 1880 U.S.A.
(72)**Name of Inventor :**
1)CHARLES Nichola
2)ZERDA Adam

(57) Abstract :
Syringe assemblies (20) comprising a disinfecting reservoir collar (40) to ensure adherence to aseptic techniques for use in flush procedures for vascular access devices (VAD s) are described. Also described are methods of disinfecting vascular access devices.

No. of Pages : 28 No. of Claims : 28

(12) PATENT APPLICATION PUBLICATION
(19) INDIA
(22) Date of filing of Application :02/01/2015
(21) Application No.33/DELNP/2015 A
(43) Publication Date : 22/05/2015

(54) Title of the invention : BUCKET ELEVATOR WITH BELT PROTECTED BY THE BUCKET SECTION

(51) International classification :B65G17/12
(31) Priority Document No :10 2012 105 988.8
(32) Priority Date :04/07/2012
(33) Name of priority country :Germany
(86) International Application No :PCT/EP2013/063823
Filing Date :01/07/2013
(87) International Publication No :WO 2014/005991
(61) Patent of Addition to Application Number :NA
Filing Date :NA
(62) Divisional to Application Number :NA
Filing Date :NA

(71)**Name of Applicant :**
1)AUMUND FOERDERTECHNIK GMBH
Address of Applicant :Saalhoffer Strasse 17 47495 Rheinberg Germany
(72)**Name of Inventor :**
1)FURTHMANN Reiner
2)KIRSCHNIOK Christian

(57) Abstract :
The invention relates to a bucket elevator for conveying bulk material comprising a driven endless belt (23) which is circulated via drums arranged on a bucket elevator head and on a bucket elevator base and comprising at least one row of buckets (10) each of which is individually fixed to the belt (23) and has a base (15) a rear wall (11) lateral walls (13) and a front wall (12) said row extending in the running direction of the belt (23). The invention is characterized in that each of the buckets (10) which are arranged in close succession relative to one another in at least one row extending in the running direction of the belt (23) has a smaller width at the base (15) than at the upper ends of the lateral walls (13) which thus extend outwards laterally. The arrangement of the buckets on the belt (23) is designed such that the belt (23) including the outer lateral edges of the belt is completely covered by the buckets (10) arranged thereon.

No. of Pages : 21 No. of Claims : 13

(12) PATENT APPLICATION PUBLICATION
(19) INDIA
(22) Date of filing of Application :13/01/2012
(21) Application No.412/DELNP/2012 A
(43) Publication Date : 22/05/2015

(54) Title of the invention : ANTI - TGF - BETA RECEPTOR TYPE II SINGLE DOMAIN ANTIBODIES

(51) International classification :H01T
(31) Priority Document No :61/229,334
(32) Priority Date :29/07/2009
(33) Name of priority country :U.S.A.
(86) International Application No :PCT/EP2010/060867
Filing Date :27/07/2010
(87) International Publication No : NA
(61) Patent of Addition to Application Number :NA
Filing Date :NA
(62) Divisional to Application Number :NA
Filing Date :NA

(71)**Name of Applicant :**
1)GLAXO GROUP LIMITED
Address of Applicant :Glaxo Wellcome House Berkeley Avenue Greenford Middlesex UB6 0NN U.K.
(72)**Name of Inventor :**
1)DE WILDT Rudolf Maria
2)DIMECH Caroline J
3)HOLMES Steve
4)STOOP Adriaan Allart

(57) Abstract :
The invention provides an anti-TGFbetaRII immunoglobulin single variable domain. Suitably, an anti-TGFbetaRII immunoglobulin single variable domain in accordance with the invention is one which binds to TGFbetaRII with a dissociation constant (Kd) in the range of lOpM to 50nM, preferably lOpM to lOnM, preferably 250pM to 10nM. Isolated polypeptides comprising an amino acid sequence that is at least 70% identical to at least one amino acid sequence selected from the group of: SEQ ID NOS: 1 to 23, wherein said isolated polypeptide binds to TGFbetaRII are also provided. The invention also provides a polypeptide, ligand or pharmaceutical composition for treating a disease associated with TGFbeta signalling and suitably a disease selected from the group of: tissue fibrosis, such as pulmonary fibrosis, including idiopathic pulmonary fibrosis, liver fibrosis, including cirrhosis and chronic hepatitis, rheumatoid arthritis, ocular disorders, or fibrosis of the skin, including keloid of skin, and kidney such as nephritis, kidney fibrosis and nephrosclerosis, and a vascular condition, such as restenosis.

No. of Pages : 132 No. of Claims : 42

(12) PATENT APPLICATION PUBLICATION
(21) Application No.3226/DELNP/2014 A
(19) INDIA
(22) Date of filing of Application :22/04/2014
(43) Publication Date : 22/05/2015

(54) Title of the invention : OPTICAL FIBRE GRATING SENSOR SYSTEM AND METHOD

(51) International classification :G01L1/24,G01M5/00,G01M11/08
(31) Priority Document No :PA 2011 70542
(32) Priority Date :30/09/2011
(33) Name of priority country :Denmark
(86) International Application No :PCT/DK2012/050345
Filing Date :19/09/2012
(87) International Publication No :WO 2013/044919
(61) Patent of Addition to Application Number :NA
Filing Date :NA
(62) Divisional to Application Number :NA
Filing Date :NA

(71)**Name of Applicant :**
1)VESTAS WIND SYSTEMS A/S
Address of Applicant :Hedeager 44 DK 8200 Aarhus N Denmark
(72)**Name of Inventor :**
1)HJORT Thomas
2)GLAVIND Lars

(57) Abstract :
The present invention relates to an optical fibre for a fibre optic sensor comprising: a first optical grating adapted to operate over a first range of wavelengths; and at least one set of further gratings adapted to operate over a second range of wavelengths each grating being adapted to operate over a portion of the second range; wherein each grating within said set has an operating range that partially overlaps with at least one other such grating operating range. The invention also extends to a sensor system and method using such an optical fibre.

No. of Pages : 34 No. of Claims : 28

(12) PATENT APPLICATION PUBLICATION
(19) INDIA
(22) Date of filing of Application :22/04/2014
(21) Application No.3227/DELNP/2014 A
(43) Publication Date : 22/05/2015

(54) Title of the invention : HIGH PRESSURE FUEL PUMP FOR A FUEL INJECTION SYSTEM

(51) International classification :F04B1/04,F04B53/04
(31) Priority Document No :10 2011 089 967.7
(32) Priority Date :27/12/2011
(33) Name of priority country :Germany
(86) International Application No :PCT/EP2012/076918
Filing Date :27/12/2012
(87) International Publication No :WO 2013/098301
(61) Patent of Addition to Application Number :NA
Filing Date :NA
(62) Divisional to Application Number :NA
Filing Date :NA

(71)**Name of Applicant :**
1)ROBERT BOSCH GMBH
Address of Applicant :Postfach 30 02 20 70442 Stuttgart Germany
(72)**Name of Inventor :**
1)SCHETTER Markus

(57) Abstract :
The invention relates to a high pressure fuel pump in particular a plug in pump for a fuel injection system for injecting fuel into the combustion chamber of an internal combustion engine comprising a pump piston (1) which can carry out a stroke movement and the first end (1.1) of which is guided in a hollow cylinder (2) and the second end (1.2) is indirectly supported on a camshaft or eccentric shaft (4) via a cup shaped component (3). The high pressure fuel pump further comprises a seal (5) which is preferably designed as a bellows and which is fixed to the pump piston (1) at one end and to the hollow cylinder (2) at the other end thereby forming an annular space (6). According to the invention a guide gap (7) which is formed between the pump piston (1) and the hollow cylinder (2) is designed as an annular gap seal in order to seal the annular space (6). Furthermore the guide gap (7) opens into an annular groove (8) which is formed in the hollow cylinder (2) and which is connected to a leakage line (9) in order to recirculate a leakage quantity.

No. of Pages : 12 No. of Claims : 6

(12) PATENT APPLICATION PUBLICATION
(19) INDIA
(22) Date of filing of Application :22/04/2014
(21) Application No.3228/DELNP/2014 A
(43) Publication Date : 22/05/2015

(54) Title of the invention : PACKET BASED PROPAGATION OF TESTING INFORMATION

(51) International classification :G01R31/3185
(31) Priority Document No :13/267959
(32) Priority Date :07/10/2011
(33) Name of priority country :U.S.A.
(86) International Application No :PCT/EP2012/068587
Filing Date :21/09/2012
(87) International Publication No :WO 2013/050255
(61) Patent of Addition to Application Number :NA
Filing Date :NA
(62) Divisional to Application Number :NA
Filing Date :NA

(71)**Name of Applicant :**
1)ALCATEL LUCENT
Address of Applicant :3 avenue Octave Grard F 75007 Paris France
(72)**Name of Inventor :**
1)PORTOLAN Michele

(57) Abstract :
A packet based testing capability is provided. The packet based testing capability is configured to provide a packet based JTAG (PJTAG) protocol. The PJTAG protocol is an asynchronous protocol configured to support the synchronous JTAG protocol.The PJTAG protocol is configured to convert between JTAG signals and packets configured to transport information of the JTAG signals (e.g. to convert JTAG signals into PJTAG packets at an interface from a JTAG domain to a PJTAG domain and to convert PJTAG packets into JTAG signals at an interface from a PJTAG domain to JTAG domain).

No. of Pages : 44 No. of Claims : 10

(12) PATENT APPLICATION PUBLICATION
(19) INDIA
(22) Date of filing of Application :18/11/2013
(21) Application No.3375/DEL/2013 A
(43) Publication Date : 22/05/2015

(54) Title of the invention : SEED TREATMENT SYSTEMS AND METHODS OF USING THE SAME

(51) International classification :A01C
(31) Priority Document No :NA
(32) Priority Date :NA
(33) Name of priority country :NA
(86) International Application No :NA
Filing Date :NA
(87) International Publication No : NA
(61) Patent of Addition to Application Number :NA
Filing Date :NA
(62) Divisional to Application Number :NA
Filing Date :NA

(71)**Name of Applicant :**
1)Syngenta Participations AG
Address of Applicant :Schwarzwaldallee 215, CH-4058 Basel, Switzerland
(72)**Name of Inventor :**
1)Sandhikar Raghvendra
2)Vadodaria Sudhir

(57) Abstract :
Systems and methods for treating seeds are disclosed.

No. of Pages : 26 No. of Claims : 42

(12) PATENT APPLICATION PUBLICATION
(21) Application No.4226/DELNP/2014 A
(19) INDIA
(22) Date of filing of Application :26/05/2014
(43) Publication Date : 22/05/2015

(54) Title of the invention : ASSAYS FOR SELECTING A TREATMENT REGIMEN FOR A SUBJECT WITH DEPRESSION AND METHODS FOR TREATMENT

(51) International classification :C12Q1/68,G01N33/68
(31) Priority Document No :61/559541
(32) Priority Date :14/11/2011
(33) Name of priority country :U.S.A.
(86) International Application No :PCT/US2012/065084
Filing Date :14/11/2012
(87) International Publication No :WO 2013/074676
(61) Patent of Addition to Application Number :NA
Filing Date :NA
(62) Divisional to Application Number :NA
Filing Date :NA

(71)**Name of Applicant :**
1)THE GENERAL HOSPITAL CORPORATION
Address of Applicant :55 Fruit Street Boston Massachusetts 02114 U.S.A.
2)NESTEC S.A.
(72)**Name of Inventor :**
1)FAVA Maurizio
2)PAPAKOSTAS George
3)KOCH JR. Harold O.
4)KRONLAGE David

(57) Abstract :
Disclosed herein are novel assays, systems and kits for selecting a treatment regimen for a subject with depression by identifying at least one nucleic acid polymorphism, e.g., but not limited to, at the MTHFR, MTR, or MTRR locus, and/or determin ing expression levels of peripheral biomarkers (e.g., SAM, SAH, and 4-HNE) in a test sample from a human subject. These biomarkers can be used to determine the effectiveness of treating a depressed subject with a folate-containing compound (alone or as an adjunct to an antidepressant). Additionally, these bio markers can be used to select an appropriate treatment regimen for subjects with treatment-resistant depression (e.g., resistant to at least one selective serotonin re uptake inhibitor). Methods and compositions for treating a subject with depression and/or determining or improving the effectiveness of an antidepressant drug taken by a subject are also provided herein.

No. of Pages : 294 No. of Claims : 115

(12) PATENT APPLICATION PUBLICATION
(19) INDIA
(22) Date of filing of Application :01/01/2015
(21) Application No.4/DELNP/2015 A
(43) Publication Date : 22/05/2015

(54) Title of the invention : LUBRICANT OIL COMPOSITION FOR INTERNAL COMBUSTION ENGINE

(51) International classification :C10M169/04,C10M129/10,C10M133/56
(31) Priority Document No :2012157372
(32) Priority Date :13/07/2012
(33) Name of priority country :Japan
(86) International Application No :PCT/JP2013/068093
Filing Date :02/07/2013
(87) International Publication No :WO 2014/010462
(61) Patent of Addition to Application Number :NA
Filing Date :NA
(62) Divisional to Application Number :NA
Filing Date :NA

(71)**Name of Applicant :**
1)JX NIPPON OIL & ENERGY CORPORATION
Address of Applicant :6 3 Otemachi 2 chome Chiyoda ku Tokyo 1008162 Japan
(72)**Name of Inventor :**
1)MIYAMOTO Hiroya

(57) Abstract :
A lubricant oil composition for an internal combustion engine which has an excellent function as an engine oil for an internal combustion engine employing heat management and particularly has an excellent fuel saving property and an excellent cleaning property. As the lubricant oil composition a lubricant oil composition for an internal combustion engine is provided which comprises (A) a base oil having a kinematic viscosity of 3.0 to 5.0 mm/s at 100°C (B) boronated succinic acid imide in an amount of 0.007 wt% or more in terms of boron element content relative to the whole amount of the composition and in an amount of 5 mass% or less in terms of succinic acid imide ashless dispersant content (C) a phenolic antioxidant agent in an amount of 0.5 mass% or more and (D) a viscosity index improver having a ratio of the weight average molecular weight thereof to the PSSI thereof of 1.2 — 10 or more in an amount of 0.1 to 5 mass% and has an HTHS viscosity of 2.0 to 2.8 mPa·s at 150°C an HTHS viscosity of 4.8 mPa·s or less at 100°C and a viscosity index of 180 or more.

No. of Pages : 39 No. of Claims : 3

(12) PATENT APPLICATION PUBLICATION
(19) INDIA
(22) Date of filing of Application :02/01/2015
(21) Application No.41/DELNP/2015 A
(43) Publication Date : 22/05/2015

(54) Title of the invention : TRANSCEIVER FRONT END

(51) International classification :H04B1/52
(31) Priority Document No :NA
(32) Priority Date :NA
(33) Name of priority country :NA
(86) International Application No :PCT/EP2012/063428
Filing Date :09/07/2012
(87) International Publication No :WO 2014/008918
(61) Patent of Addition to Application Number :NA
Filing Date :NA
(62) Divisional to Application Number :NA
Filing Date :NA

(71)**Name of Applicant :**
1)Telefonaktiebolaget L M Ericsson (publ)
Address of Applicant :S 164 83 Stockholm Sweden
(72)**Name of Inventor :**
1)ANDERSSON Stefan
2)DIN Imad ud
3)ECKERBERT Daniel
4)SJ–LAND Henrik
5)TIRED Tobias
6)WERNEHAG Johan

(57) Abstract :
A transceiver front end of a communication device is disclosed. The transceiver front end is connectable to a signal transmission and reception arrangement adapted to transmit a transmit signal having a transmit frequency and to receive a receive signal having a receive frequency to a transmitter adapted to produce the transmit signal and to a receiver adapted to process the receive signal. The transceiver front end comprises at least one of a transmit frequency blocking arrangement and a receive frequency blocking arrangement. The transmit frequency blocking arrangement has a blocking frequency interval associated with the transmit frequency and a non blocking frequency interval associated with the receive frequency and is adapted to block passage of transmit frequency signals between the signal transmission and reception arrangement and the receiver. The receive frequency blocking arrangement has a blocking frequency interval associated with the receive frequency and a non blocking frequency interval associated with the transmit frequency and is adapted to block passage of receive frequency signals between the signal transmission and reception arrangement and the transmitter. At least one of the transmit frequency blocking arrangement and the receive frequency blocking arrangement comprises a network of passive components comprising at least one transformer and a filter arrangement adapted to have a higher impedance value in the blocking frequency interval than in the non blocking frequency interval.

No. of Pages : 41 No. of Claims : 22

(12) PATENT APPLICATION PUBLICATION
(19) INDIA
(22) Date of filing of Application :13/01/2012
(21) Application No.410/DELNP/2012 A
(43) Publication Date : 22/05/2015

(54) Title of the invention : METHOD OF CONTROLLING A VARIABLE SPEED CONSTANT FREQUENCEY GENERATOR

(51) International classification :H02P 9/44
(31) Priority Document No :12/501,798
(32) Priority Date :13/07/2009
(33) Name of priority country :U.S.A.
(86) International Application No :PCT/US2010/036391
Filing Date :27/05/2010
(87) International Publication No :WO 2011/008350
(61) Patent of Addition to Application Number :NA
Filing Date :NA
(62) Divisional to Application Number :NA
Filing Date :NA

(71)**Name of Applicant :**
1)GENERAC POWER SYSTEMS, INC.
Address of Applicant :S45 W29290 HWY. 59, P.O. BOX 8, WAUKESHA, WI 53187, U.S.A. U.S.A.
(72)**Name of Inventor :**
1)GRAHAM W. MCLEAN
2)DAVID POLLOCK
3)FRANCIS X. WEDEL

(57) Abstract :
A method of controlling an engine-driven, electrical generator is provided. The generator generates an output voltage at a frequency with the engine running at an operating speed. The method includes the steps of connecting the generator to a load and varying the operating speed of the engine to optimize fuel consumption in response to the load. Thereafter, the frequency of the output voltage is modified to n predetermined level.

No. of Pages : 18 No. of Claims : 20

(12) PATENT APPLICATION PUBLICATION
(21) Application No.47/DELNP/2015 A
(19) INDIA
(22) Date of filing of Application :02/01/2015
(43) Publication Date : 22/05/2015

(54) Title of the invention : METHOD FOR PRODUCING BIS(EPOXYPROPYL)SULFIDE AND BIS(EPOXYPROPYL)POLYSULFIDE

(51) International classification :C07D301/27,C07D303/34
(31) Priority Document No :2012143171
(32) Priority Date :26/06/2012
(33) Name of priority country :Japan
(86) International Application No :PCT/JP2013/067032
Filing Date :21/06/2013
(87) International Publication No :WO 2014/002876
(61) Patent of Addition to Application Number :NA
Filing Date :NA
(62) Divisional to Application Number :NA
Filing Date :NA

(71)**Name of Applicant :**
1)MITSUBISHI GAS CHEMICAL COMPANY INC.
Address of Applicant :MITSUBISHI Building 5 2 Marunouchi 2 chome Chiyoda ku Tokyo 1008324 Japan
(72)**Name of Inventor :**
1)HORIKOSHI Hiroshi
2)TAKEUCHI Motoharu

(57) Abstract :
According to the present invention a method for producing bis(epoxypropyl)sulfide or bis(epoxypropyl)polysulfide can be provided which is characterized by comprising adding a metal compound selected from the group consisting of a metal hydrosulfide a metal sulfide and a metal polysulfide to an epihalohydrin at 5 to 30°C in such a manner that the molar ratio of the epihalohydrin to the metal compound becomes 5 to 20 to thereby cause the reaction of the epihalohydrin with the metal compound. In a preferred embodiment the epihalohydrin is epichlorohydrin the hydrosulfide metal is sodium hydrosulfide or potassium hydrosulfide the metal sulfide is sodium sulfide or potassium sulfide and the metal polysulfide is sodium polysulfide or potassium polysulfide.

No. of Pages : 22 No. of Claims : 5

(12) PATENT APPLICATION PUBLICATION
(19) INDIA
(22) Date of filing of Application :23/04/2014

(21) Application No.3271/DELNP/2014 A
(43) Publication Date : 22/05/2015

(54) Title of the invention : METHOD AND COMPOSITION

(51) International classification :A23B7/10,A23B7/154,A23L3/3508
(31) Priority Document No :1116817.6
(32) Priority Date :29/09/2011
(33) Name of priority country :U.K.
(86) International Application No :PCT/GB2012/000749
Filing Date :28/09/2012
(87) International Publication No :WO 2013/045881
(61) Patent of Addition to Application Number :NA
Filing Date :NA
(62) Divisional to Application Number :NA
Filing Date :NA

(71)**Name of Applicant :**
1)NATURAL BIOTECHNOLOGY SPRL
Address of Applicant :Rue de Li¨ge 1 B 6180 Courcelles Belgium
(72)**Name of Inventor :**
1)DODD Jeffrey Ian

(57) Abstract :
There is described a method of preserving leafy vegetables which comprises treating the leafy vegetables with a processing aid composition said processing aid composition comprising from about 0.01% w/w to 5% w/w salicylic acid; or a salt or ester thereof.

No. of Pages : 46 No. of Claims : 44

(12) PATENT APPLICATION PUBLICATION
(19) INDIA
(22) Date of filing of Application :23/04/2014
(21) Application No.3272/DELNP/2014 A
(43) Publication Date : 22/05/2015

(54) Title of the invention : METHOD FOR SEALING A METAL CANS WITH PEELABLE LIDS AND DEVICE THEREFOR

(51) International classification :B65B51/22,B65B7/28,H05B6/10
(31) Priority Document No :11190398.5
(32) Priority Date :23/11/2011
(33) Name of priority country :EPO
(86) International Application No :PCT/EP2012/069859
Filing Date :08/10/2012
(87) International Publication No :WO 2013/075877
(61) Patent of Addition to Application Number :NA
Filing Date :NA
(62) Divisional to Application Number :NA
Filing Date :NA

(71)**Name of Applicant :**
1)CROWN PACKAGING TECHNOLOGY INC
Address of Applicant :11535 South Central Avenue Alsip IL 60803 2599 U.S.A.
(72)**Name of Inventor :**
1)MAXWELL Ian
2)BILKO John Pawel
3)COMBE Florian Christian Gregory

(57) Abstract :
A method of sealing a peelable lid (2) to a flange (4) provided within a metal can body (1) which involves inserting an induction coil (6) into the can body to primarily heat the sealing surface (5) of the flange whilst keeping the exterior wall of the can relatively cool to avoid tin reflow and decoration degradation of the exterior wall. The induction coil is subsequently removed from the can body and a peelable lid applied to the flange whereby residual heat in the flange aids the sealing of the lid to the flange e.g. by allowing activation of a bonding material.

No. of Pages : 17 No. of Claims : 10

(12) PATENT APPLICATION PUBLICATION
(19) INDIA
(22) Date of filing of Application :13/01/2012
(21) Application No.396/DELNP/2012 A
(43) Publication Date : 22/05/2015

(54) Title of the invention : CASSETTES AND METHODS OF USING SAME

(51) International classification :A61M 5/142
(31) Priority Document No :61/225,161
(32) Priority Date :13/07/2009
(33) Name of priority country :U.S.A.
(86) International Application No :PCT/US2010/041326
Filing Date :08/07/2010
(87) International Publication No :WO 2011/008624
(61) Patent of Addition to Application Number :NA
Filing Date :NA
(62) Divisional to Application Number :NA
Filing Date :NA

(71)**Name of Applicant :**
1)NESTEC S.A.
Address of Applicant :AVENUE NESTLE 55, CH-1800 VEVEY, SWITZERLAND
(72)**Name of Inventor :**
1)CUMMINGS, DAVID CHARLES
2)HALBERT, ALAN P.
3)HARIHARESAN, SERALAATHAN
4)HIGGINS, JAMES ALLEN
5)HIGHLEY, BRIAN
6)JEDWAB, MICHAEL
7)MEYER, RUSSELL PAUL
8)NELSON, ANDREW PETER
9)WEST, DAVID WOODRUFF

(57) Abstract :
The present disclosure provides cassettes and methods of using same for the delivery of fluids to a patient using fluid delivery systems. In a general embodiment, the cassettes of the present disclosure include a flexible tube, a housing having a recessed area and first and second ends for holding the flexible tube, and at least two additional components including, for example, different sensors, false reading components for sensors, anti-flow valve means, insertion guides, directional indicators, latch mechanisms, kink-prevention notches, etc. Such additional components provide the cassettes of the present disclosure with several advantages including, for example, quality control, efficiency of use, cost effectiveness, and safety of use.

No. of Pages : 175 No. of Claims : 27

(12) PATENT APPLICATION PUBLICATION
(19) INDIA
(22) Date of filing of Application :14/01/2012
(21) Application No.416/DELNP/2012 A
(43) Publication Date : 22/05/2015

(54) Title of the invention : EVENT PROCESSING METHOD AND DEVICE

(51) International classification :H01S
(31) Priority Document No :200910159185.X
(32) Priority Date :22/07/2009
(33) Name of priority country :China
(86) International Application No :PCT/CN2009/075521
Filing Date :11/12/2009
(87) International Publication No : NA
(61) Patent of Addition to Application Number :NA
Filing Date :NA
(62) Divisional to Application Number :NA
Filing Date :NA

(71)**Name of Applicant :**
1)ZTE CORPORATION
Address of Applicant :ZTE Plaza Keji Road South Hi-Tech Industrial Park Nanshan Shenzhen Guangdong 518057 China China
(72)**Name of Inventor :**
1)GE Quanmin;

(57) Abstract :
An event processing method and device are disclosed. The method comprise: setting and storing a specific event matching rule of an event (10); monitoring a pre-defined event and generating a first sentence describing information related to the specific event matching rule of the pre-defined event and a second sentence describing the pre-defined event (11); matching the second sentence with the first sentence and determining whether the monitored pre-defined event conforms to the specific event matching rule according to the matching result (12); and triggering the set event operation when the pre-defined event conforms to the specific event matching rule (13). According to the invention, the real-time performance and efficiency of event processing can be effectively improved.

No. of Pages : 24 No. of Claims : 14

(12) PATENT APPLICATION PUBLICATION
(19) INDIA
(22) Date of filing of Application :11/06/2014
(21) Application No.4765/DELNP/2014 A
(43) Publication Date : 22/05/2015

(54) Title of the invention : BEVERAGE DISPENSER WITH IMPROVED OUTLET TUBES ASSEMBLY

(51) International classification :A47J31/40,A47J31/46
(31) Priority Document No :11193789.2
(32) Priority Date :15/12/2011
(33) Name of priority country :EPO
(86) International Application No :PCT/EP2012/075212
Filing Date :12/12/2012
(87) International Publication No :WO 2013/087686
(61) Patent of Addition to Application Number :NA
Filing Date :NA
(62) Divisional to Application Number :NA
Filing Date :NA

(71)**Name of Applicant :**
1)NESTEC S.A.
Address of Applicant :Av. Nestl 55 CH 1800 Vevey Switzerland
(72)**Name of Inventor :**
1)REY Cdric
2)CALDERONE Roberto Angelo
3)SCORRANO Lucio

(57) Abstract :
The invention concerns a beverage dispenser comprising : at least one beverage ingredient processing assembly (1a,1b,1c) presenting one outlet (2a,2b,2c) for evacuating a beverage at least one conduit (8a,8b,8c) removeably connected to the outlet (2a,2b,2c) of the at least one beverage ingredient processing assembly for dispensing the beverage in a container (9) wherein: the dispenser comprises a drawer assembly (3) comprising a drawer (4) composed of an upper part (4a) and a lower part (4b) said both parts being at least partly removable one from the other at least one of said parts presenting at least one groove (50a,50b,50c,51a ,51b,51c) on its internal surface so that when the two parts are connected together the at least one groove forms at least a part of the least one conduit (8a,8b,8c) for dispensing the beverage from the beverage ingredient processing assembly outlet (2a,2b,2c) to the container (9) and the upper part (4a) and the lower part (4b) of the drawer assembly are made of a first hard material and a second soft polymer material (20) covers the upper part (4a) and/or the lower part (4b) at least on the area near from the edges of the at least one conduit (8a,8b,8c) formed by the at least one groove and the drawer assembly (3) comprises a cover (6) for maintaining and squeezing the upper part and the lower part one against the other.

No. of Pages : 23 No. of Claims : 16

(12) PATENT APPLICATION PUBLICATION
(19) INDIA
(22) Date of filing of Application :23/04/2014
(21) Application No.3255/DELNP/2014 A
(43) Publication Date : 22/05/2015

(54) Title of the invention : A DEVICE FOR APPLICATION OF A SENSOR TO A MEASUREMENT SITE A SENSOR HEAD A KIT OF AN APPLICATION DEVICE AND SENSOR AND USE OF AN APPLICATION DEVICE FOR OPTICAL MEASUREMENTS OF PHYSIOLOGICAL PARAMETERS

(51) International classification :A61B5/1455
(31) Priority Document No :11187342.8
(32) Priority Date :31/10/2011
(33) Name of priority country :EPO
(86) International Application No :PCT/EP2012/068851
Filing Date :25/09/2012
(87) International Publication No :WO 2013/064313
(61) Patent of Addition to Application Number :NA
Filing Date :NA
(62) Divisional to Application Number :NA
Filing Date :NA

(71)**Name of Applicant :**
1)SENTEC AG
Address of Applicant :Ringstrasse 39 CH 4106 Therwil Switzerland
(72)**Name of Inventor :**
1)ELLENBERGER GIRARD Christoph
2)RUDMANN Dominik
3)SCHUMACHER Peter Matthias

(57) Abstract :
A device (1) for application of a sensor to a measurement site said device comprising at least one application area (2) enabling the application of the device to a patient s skin (3) is provided. The device comprises an interface (4) for connecting the device to a sensor head wherein the device has at least a wall arrangement (5) defining an applicator volume above the patient s skin. The wall arrangement comprises a patient s side and a sensor side. At least one gas permeable membrane (6) separates the applicator volume into a first volume (7) being directed to the measuring site at the patient s side of the wall arrangement (5) and a second volume (8) being separated from the patient s skin and directed to the sensor side of the wall arrangement (5).

No. of Pages : 23 No. of Claims : 17

(12) PATENT APPLICATION PUBLICATION
(19) INDIA
(22) Date of filing of Application :23/04/2014
(21) Application No.3256/DELNP/2014 A
(43) Publication Date : 22/05/2015

(54) Title of the invention : BULK HYDROPHILIC FUNTIONALIZATION OF POLYAMIDE 46

(51) International classification :C08G69/48,B01J27/125
(31) Priority Document No :61/627758
(32) Priority Date :17/10/2011
(33) Name of priority country :U.S.A.
(86) International Application No :PCT/SE2012/051109
Filing Date :17/10/2012
(87) International Publication No :WO 2013/058702
(61) Patent of Addition to Application Number :NA
Filing Date :NA
(62) Divisional to Application Number :NA
Filing Date :NA

(71)**Name of Applicant :**
1)EDUCTIV AB
Address of Applicant :c/o Daniel Yar Hamidi Bergdalsgatan 22 SE 504 58 Bors Sweden
(72)**Name of Inventor :**
1)BARGHI Hamidreza
2)TAHERZADEH Mohammad

(57) Abstract :
A modified polymer as result of a bulk functionalization of polyamide 46 (PA 46) is presented as well as methods for synthesizing the modified polymer. This functionalization of PA 46 is performed to provide a homogenous semi permeable polyamide 46 capable of different charges and different porosities with particles of nanoscale size in order to replace or improve other polyamide fibers used in the textile industry filtering processes selective sorption controlled release devices phase transfer catalysts chromatography media biocompatible capsules artificial skins organs bone void repair as well as in cell bioreactors and incubators dental impliments medical devices clothing detectors perfusion devices in regenerative medicine and fuel cells.

No. of Pages : 39 No. of Claims : 12

(12) PATENT APPLICATION PUBLICATION
(19) INDIA
(22) Date of filing of Application :23/04/2014
(21) Application No.3257/DELNP/2014 A
(43) Publication Date : 22/05/2015

(54) Title of the invention : ORAL CARE GEL DISPENSER SYSTEMS

(51) International classification :A61Q11/02,A61K8/21,A61K8/34
(31) Priority Document No :NA
(32) Priority Date :NA
(33) Name of priority country :NA
(86) International Application No :PCT/US2011/060678
Filing Date :15/11/2011
(87) International Publication No :WO 2013/074080
(61) Patent of Addition to Application Number :NA
Filing Date :NA
(62) Divisional to Application Number :NA
Filing Date :NA

(71)**Name of Applicant :**
1)COLGATE PALMOLIVE COMPANY
Address of Applicant :300 Park Avenue New York New York 10022 U.S.A.
(72)**Name of Inventor :**
1)CHEN Elva
2)KENNEDY Sharon
3)MIRAJKAR Yelloji Rao
4)JOGUN Suzanne
5)PRENCIPE Michael

(57) Abstract :
The invention provides an oral care system comprising a gel in a pen dispenser the dispenser comprising a chamber which permits dispensing of a measured amount of the gel wherein the gel exhibits a Herschel Bulkley yield stress of 10 to 230 dynes/cm2 a Herschel Bulkley viscosity of 3 to 500 poise and a Herschel Bulkley rate index of 0.4 to 0.6 the specific viscosity permitting efficient application of the gel as well as methods of using the same.

No. of Pages : 20 No. of Claims : 25

(12) PATENT APPLICATION PUBLICATION
(21) Application No.5/DELNP/2015 A
(19) INDIA
(22) Date of filing of Application :01/01/2015
(43) Publication Date : 22/05/2015

(54) Title of the invention : DOCKING STATION FOR PORTABLE TERMINAL

(51) International classification :G06F1/16
(31) Priority Document No :1020120065348
(32) Priority Date :19/06/2012
(33) Name of priority country :Republic of Korea
(86) International Application No :PCT/KR2013/004513
Filing Date :23/05/2013
(87) International Publication No :WO 2013/191384
(61) Patent of Addition to Application Number :NA
Filing Date :NA
(62) Divisional to Application Number :NA
Filing Date :NA

(71)**Name of Applicant :**
1)SAMSUNG ELECTRONICS CO. LTD.
Address of Applicant :129 Samsung ro Yeongtong gu Suwon si Gyeonggi do 443 742 Republic of Korea
(72)**Name of Inventor :**
1)LEE John Gy

(57) Abstract :
A docking station for a portable terminal includes: a body configured with a connection member to allow the portable terminal to be removably mounted to the body; and the connection member is installed to be movable on the body the connection member comprising connection terminals wherein when the portable terminal is mounted on the docking station the connection member approaches the portable terminal to connect the connection terminals to the portable terminal. The connection body in which the connection terminals are arranged can be moved together with a portable terminal on the body of the docking station while being connected with the portable terminal using a point contact structure. Therefore it is possible to reduce the risk of damage of the connection body due to the movement of the portable terminal. Further the connection body may approach to a portable terminal by the attractive force of one or more magnetic bodies or the like to connect the connection terminals with the portable terminal.

No. of Pages : 17 No. of Claims : 20

(12) PATENT APPLICATION PUBLICATION
(19) INDIA
(22) Date of filing of Application :21/04/2014
(21) Application No.3168/DELNP/2014 A
(43) Publication Date : 22/05/2015

(54) Title of the invention : TORSION TEST DEVICE

(51) International classification :G01N3/22,G01N3/34
(31) Priority Document No :2011218789
(32) Priority Date :30/09/2011
(33) Name of priority country :Japan
(86) International Application No :PCT/JP2012/074634
Filing Date :26/09/2012
(87) International Publication No :WO 2013/047551
(61) Patent of Addition to Application Number :NA
Filing Date :NA
(62) Divisional to Application Number :NA
Filing Date :NA

(71)**Name of Applicant :**
1)KOKUSAI KEISOKUKI KABUSHIKI KAISHA
Address of Applicant :21 1 Nagayama 6 chome Tama shi Tokyo 2060025 Japan
(72)**Name of Inventor :**
1)MATSUMOTO Sigeru
2)MIYASHITA Hiroshi
3)MURAUCHI Kazuhiro
4)HASEGAWA Masanobu
5)SAKAGAMI Tomotaka

(57) Abstract :
The present invention is provided with a first drive unit that is connected to the input shaft of a test specimen and a second drive unit that is connected to the output shaft of the test specimen. The first and second drive units are provided with: a servo motor; a reduction gear that reduces and outputs the rotation of the output shaft of the servo motor; a chuck to which the input shaft or the output shaft of the test specimen is connected and that transmits the output of the reduction gear to the input shaft or the output shaft of the test specimen; a torque sensor that transmits the output of the reduction gear to the chuck and detects the torque that the reduction gear outputs; and a tachometer that detects the rotational frequency of the chuck.

No. of Pages : 32 No. of Claims : 13

(12) PATENT APPLICATION PUBLICATION
(19) INDIA
(22) Date of filing of Application :23/04/2014
(21) Application No.3239/DELNP/2014 A
(43) Publication Date : 22/05/2015

(54) Title of the invention : METHOD FOR PREVENTING DISEASES IN TRANSPLANTED RICE

(51) International classification :A01N43/80,A01P3/00,A01P7/04
(31) Priority Document No :2011242115
(32) Priority Date :04/11/2011
(33) Name of priority country :Japan
(86) International Application No :PCT/EP2012/071699
Filing Date :02/11/2012
(87) International Publication No :WO 2013/064619
(61) Patent of Addition to Application Number :NA
Filing Date :NA
(62) Divisional to Application Number :NA
Filing Date :NA

(71)**Name of Applicant :**
1)BAYER INTELLECTUAL PROPERTY GMBH
Address of Applicant :Alfred Nobel Str. 10 40789 Monheim Germany
(72)**Name of Inventor :**
1)SAWADA Katsumi
2)NIKI Masahito
3)SAKUMA Haruhiko
4)HADANO Hiroyuki
5)NKAMURA Shin
6)INUTA Tetsuya
7)SUNAGAWA Takashi

(57) Abstract :
This invention provides a method for preventing disease and/or controlling animal pests in transplanted rice having long residual effect in rice paddies wherein the amount of at least one agrochemical is extremely reduced compared with that of the conventional nursery box treatment. A method for preventing disease in transplanted rice in rice paddies characterized in that the composition comprising isotianil is adhered to rice seeds before they are sowed in nursery boxes.

No. of Pages : 16 No. of Claims : 11

(12) PATENT APPLICATION PUBLICATION
(21) Application No.48/DELNP/2015 A
(19) INDIA
(22) Date of filing of Application :02/01/2015
(43) Publication Date : 22/05/2015

(54) Title of the invention : METHOD AND MOUNTING SYSTEM FOR MOUNTING LIFT COMPONENTS

(51) International classification :B66B19/00
(31) Priority Document No :10 2012 104 993.9
(32) Priority Date :11/06/2012
(33) Name of priority country :Germany
(86) International Application No :PCT/EP2013/061561
Filing Date :05/06/2013
(87) International Publication No :WO 2013/186096
(61) Patent of Addition to Application Number :NA
Filing Date :NA
(62) Divisional to Application Number :NA
Filing Date :NA

(71)**Name of Applicant :**
1)THYSSENKRUPP ELEVATOR AG
Address of Applicant :ThyssenKrupp Allee 1 45143 Essen Germany
(72)**Name of Inventor :**
1)WILTS Hermann
2)MADERA Martin
3)NEUMEIER Michael
4)ZERELLES Holger

(57) Abstract :
The invention relates to a method for mounting lift components of a lift system in a vertical shaft (38) of a building with the aid of a mounting system (10; 100; 120) which can be moved in the shaft (38) wherein the lift system has at least one cage which can travel along guide rails (28a,28b,30a,30b) in the shaft (38). In order to develop the method to achieve shorter fitting times and less dependency upon how advanced the construction of the building is according to the invention a mounting system (10; 100; 120) is positioned in the shaft having a support platform (12) and a mounting platform (40) which are disposed one above the other and having a lifting and pulling device (42,125) the support platform (12) and the mounting platform (40) being alternately fixed in position in the shaft (38) and the platform (12,40) which is not fixed in position at any one time is displaced in the vertical direction by means of the lifting and pulling device (42; 125) relative to the platform (12,40) fixed in position. In addition the invention relates to a mounting system (10; 100; 120) for carrying out the method.

No. of Pages : 37 No. of Claims : 23

(12) PATENT APPLICATION PUBLICATION
(19) INDIA
(22) Date of filing of Application :19/01/2012
(21) Application No.573/DELNP/2012 A
(43) Publication Date : 22/05/2015

(54) Title of the invention : MIXTURES OF MESOIONIC PESTICIDES

(51) International classification :A01N 43/54
(31) Priority Document No :61/231,483
(32) Priority Date :05/08/2009
(33) Name of priority country :U.S.A.
(86) International Application No :PCT/US2010/044285
Filing Date :03/08/2010
(87) International Publication No :WO 2011/017351
(61) Patent of Addition to Application Number :NA
Filing Date :NA
(62) Divisional to Application Number :NA
Filing Date :NA

(71)**Name of Applicant :**
1)E. I. DU PONT DE NEMOURS AND COMPANY
Address of Applicant :1007 MARKET STREET, WILMINGTON, DE 19898, U.S.A.
(72)**Name of Inventor :**
1)HOLYOKE JR CALEB WILLIAM
2)ZHANG WENMING
3)TONG MY-HANH THI

(57) Abstract :
Disclosed are compositions comprising (a) at least one compound selected from compounds of Formula (1), N-oxides, and salt thereof, wherein R1 is phenyl optionally substituted with up to 5 substituents independently selected from R3, or pyridinyl optionally substituted with up to 4 substituents independently selected from R3; R2 is C1-C4 haloalkyl; or thiazolyl, pyridinyl or pyrimidinyl, each optionally substituted with up to 2 substituents independently selected from the group consisting of halogen and C1-C4 alkyl; each R3 is independently halogen, cyano, C1-C4 alkyl, C1-C4 haloalkyl, C1-C4 alkoxy, CI-C4 haloalkoxy, C(R4)=NOR4 or Q; each R4 is independently CI-C4 alkyl; Z is CH=CH or S; and each Q is independently phenyl or pyridinyl, each optionally substituted with up to 3 substituents independently selected from the group consisting of halogen, cyano, C1-C4 alkyl, C1-C4 haloalkyl, C1-C4 alkoxy and C1-C4 haloalkoxy; and (b) at least one invertebrate pest control agent. Also disclosed are methods for controlling an invertebrate pest comprising contacting the invertebrate pest or its environment with a biologically effective amount of a composition of the invention.

No. of Pages : 222 No. of Claims : 19

(12) PATENT APPLICATION PUBLICATION
(19) INDIA
(22) Date of filing of Application :23/04/2014
(21) Application No.3419/DELNP/2014 A
(43) Publication Date : 22/05/2015

(54) Title of the invention : REGULATABLE PROMOTER

(51) International classification	:C07K14/395,C12N15/81,C07K14/39
(31) Priority Document No	:11184323.1
(32) Priority Date	:07/10/2011
(33) Name of priority country	:EPO
(86) International Application No	:PCT/EP2012/069757
Filing Date	:05/10/2012
(87) International Publication No	:WO 2013/050551
(61) Patent of Addition to Application Number	:NA
Filing Date	:NA
(62) Divisional to Application Number	:NA
Filing Date	:NA

(71)**Name of Applicant :**
1)LONZA LTD
Address of Applicant :Lonzastrae CH 3930 Visp Switzerland
(72)**Name of Inventor :**
1)MATTANOVICH Diethard
2)GASSER Brigitte
3)MAURER Michael
4)PRIELHOFER Roland
5)KLEIN Joachim
6)WENGER Jana

(57) Abstract :
A method of producing a protein of interest (POI) by culturing a recombinant eukaryotic cell line comprising an expression construct comprising a regulatable promoter and a nucleic acid molecule encoding a POI under the transcriptional control of said promoter comprising the steps a) cultivating the cell line with a basal carbon source repressing the promoter b) cultivating the cell line with a limited amount of a supplemental carbon source de repressing the promoter to induce production of the POI at a transcription rate of at least 15% as compared to the native pGAP promoter and c) producing and recovering the POI; and further an isolated regulatable promoter and a respective expression system.

No. of Pages : 115 No. of Claims : 21

(12) PATENT APPLICATION PUBLICATION
(21) Application No.417/DELNP/2012 A
(19) INDIA
(22) Date of filing of Application :14/01/2012
(43) Publication Date : 22/05/2015

(54) Title of the invention : METHOD FOR MANAGING CONFIGURATION INFORMATION OF AN OUTSOURCED PART AND METHOD AND SYSTEM FOR MANAGING AN ALARM OF AN OUTSOURCED PART

(51) International classification :B23B
(31) Priority Document No :200910158513.4
(32) Priority Date :08/07/2009
(33) Name of priority country :China
(86) International Application No :PCT/CN2009/075814
Filing Date :22/12/2009
(87) International Publication No : NA
(61) Patent of Addition to Application Number :NA
Filing Date :NA
(62) Divisional to Application Number :NA
Filing Date :NA

(71)**Name of Applicant :**
1)ZTE CORPORATION
Address of Applicant :ZTE Plaza Keji Road South Hi-Tech Industrial Park Nanshan Shenzhen Guangdong 518057 China
(72)**Name of Inventor :**
1)WANG Ping;

(57) Abstract :
A method and system for managing an alarm of an outsourced part and a method for managing configuration information of an outsourced part are provided, so as to solve the problem in the prior art that the maintenance operation in a Business Operation Support System (BOSS) for the alarm function of the outsourced part is complex. The method for managing configuration information of an outsourced part is applied to a system for managing an alarm of an outsourced part, and the system comprises a client side and a server side. The method comprises: the client side receives a request of a user for operating configuration information of the outsourced part; the client side performs a corresponding operation on the configuration information of the outsourced part that the client side stores according to the request for the operation, and sends an operation result to the server side according to the type of the operation; and the server side performs an update processing on the configuration information of the outsourced part that the server side stores according to the operation result. With the technical solution of the present invention, the maintenance operation of the BOSS on the alarm function of the outsourced part could be simplified.

No. of Pages : 26 No. of Claims : 11

(12) PATENT APPLICATION PUBLICATION
(19) INDIA
(22) Date of filing of Application :14/07/2014
(21) Application No.5843/DELNP/2014 A
(43) Publication Date : 22/05/2015

(54) Title of the invention : DEVICE FOR KEEPING A GUIDED VEHICLE ON COURSE IN THE EVENT OF DERAILMENT AND/OR LOSS OF GUIDANCE

(51) International classification :B61F9/00
(31) Priority Document No :12290100.2
(32) Priority Date :21/03/2012
(33) Name of priority country :EPO
(86) International Application No :PCT/EP2013/052793
Filing Date :12/02/2013
(87) International Publication No :WO 2013/139534
(61) Patent of Addition to Application Number :NA
Filing Date :NA
(62) Divisional to Application Number :NA
Filing Date :NA

(71)**Name of Applicant :**
1)SIEMENS S.A.S.
Address of Applicant :9 Boulevard Finot F 93200 St. Denis France
(72)**Name of Inventor :**
1)CARPENTIER Philippe
2)CLARISSOU Yves
3)CONSOLI Luciano

(57) Abstract :
The invention describes a device for keeping a guided vehicle on course which is intended to be fitted to a guided vehicle able to move on a track comprising a guide rail (3) and two lateral rails (13 14) which are parallel to said guide rail said guided vehicle comprising a guide member comprising guide wheels (1 2) each of the wheels being intended to bear against said guide rail said course preservation device comprising: a. a bar (15) intended to be fixed to said guide member so as to be transverse to the track said bar having a length L of between the distance D separating the lateral rails from one another minus the width C of the rail head of said guide rail and said distance D; b. a fixing means designed for fixing said bar (15) to said guide member in such a way that said bar is positioned transversely between and at the level of said lateral rails.

No. of Pages : 20 No. of Claims : 14

(12) PATENT APPLICATION PUBLICATION
(19) INDIA
(22) Date of filing of Application :14/07/2014
(21) Application No.5844/DELNP/2014 A
(43) Publication Date : 22/05/2015

(54) Title of the invention : VOLTAGE AND/OR CURRENT SENSING DEVICE FOR LOW MEDIUM OR HIGH VOLTAGE SWITCHING DEVICES

(51) International classification :H01H71/12,G01R15/04,G01R15/18
(31) Priority Document No :12000298.5
(32) Priority Date :19/01/2012
(33) Name of priority country :EPO
(86) International Application No :PCT/EP2013/000145
Filing Date :18/01/2013
(87) International Publication No :WO 2013/107647
(61) Patent of Addition to Application Number :NA
Filing Date :NA
(62) Divisional to Application Number :NA
Filing Date :NA

(71)**Name of Applicant :**
1)ABB TECHNOLOGY AG
Address of Applicant :Affolternstrasse 44 CH 8050 Zurich Switzerland
(72)**Name of Inventor :**
1)JAVORA Radek
2)RASCHKA David

(57) Abstract :
The invention relates to a voltage and/or current sensing device for low medium or high voltage switching devices. In order to result in a constructively enhanced measuring device with high performance for the use in switching devices the invention is that the sensing device comprises a first voltage sensing part 12 a second voltage sensing part 14 and a current sensing part 13 all arranged in a same common from the switching device separated single housing 30 in a way that output wire 16 from the first voltage sensing part 12 sensing voltage at an upper terminal 10 of the switching device is located close to the current sensing part 13 in that way that in case that the output wire is applied with an insulating cover it is mechanically fixed to the current sensor part and in case that the output wire is implemented in an isolation body it is only located near to the current sensing part.

No. of Pages : 19 No. of Claims : 14

(12) PATENT APPLICATION PUBLICATION
(19) INDIA
(22) Date of filing of Application :14/11/2013
(21) Application No.3353/DEL/2013 A
(43) Publication Date : 22/05/2015

(54) Title of the invention : SHARING OF A FILE USING ELECTRONIC DEVICES

(51) International classification :H04L
(31) Priority Document No :NA
(32) Priority Date :NA
(33) Name of priority country :NA
(86) International Application No :NA
Filing Date :NA
(87) International Publication No : NA
(61) Patent of Addition to Application Number :NA
Filing Date :NA
(62) Divisional to Application Number :NA
Filing Date :NA

(71)**Name of Applicant :**
1)Samsung India Electronics Pvt Ltd.
Address of Applicant :Logix Cyber Park Tower C 8th to 10th floor, Tower D, Ground to 10th floor, Plot No.C - 28-29, Sector - 62, Noida-201301 (U.P), India Uttar Pradesh India
(72)**Name of Inventor :**
1)Mohammad Aslam
2)Vishwesh Yadav
3)Anant Jindal
4)Priyanka Goel
5)Ananya Vetaal
6)Aditi Chaturvedi
7)Munwar Khan
8)Sanket Magarkar

(57) Abstract :
The embodiments herein provide a method and system for sharing a file using a plurality of paired electronic devices. The method includes sending a request from a first electronic device to download the file from a server. Further, the method includes fragmenting said file into a plurality of portions at the server, and sharing a directory of the portions with the first electronic device. Furthermore, the method includes sharing the directory by the first electronic device with the paired second electronic devices, where the paired second electronic device downloads one or more portions of the file in accordance to the directory.

No. of Pages : 40 No. of Claims : 32

(12) PATENT APPLICATION PUBLICATION
(19) INDIA
(22) Date of filing of Application :15/11/2013
(21) Application No.3354/DEL/2013 A
(43) Publication Date : 22/05/2015

(54) Title of the invention : A WEIGHING SYSTEM

(51) International classification :G06F
(31) Priority Document No :NA
(32) Priority Date :NA
(33) Name of priority country :NA
(86) International Application No :NA
Filing Date :NA
(87) International Publication No : NA
(61) Patent of Addition to Application Number :NA
Filing Date :NA
(62) Divisional to Application Number :NA
Filing Date :NA

(71)**Name of Applicant :**
1)INDIAN INSTITUTE OF TECHNOLOGY, Ropar
Address of Applicant :Nangal Road, Rupnagar-140001, Punjab, India
(72)**Name of Inventor :**
1)Prabir Sarkar
2)Banoth Praveen Kumar
3)Honey Singla
4)Imroj Qamar
5)Jaskaran Singh Virdi
6)Kumar Harshad

(57) Abstract :
A weighing system is disclosed. The system includes a supporting frame, a sliding plank located on the said supporting frame and movably coupled to the said frame, a weight carrying unit coupled to the said sliding plank for carrying an unknown object weight to be measured, an input device positioned on the said sliding plank, said input device being configured to virtually change its position in response to a change in position of the sliding plank, a computing device coupled to the said input device, said computing device being configured to detect the virtual change in the position of the input device and accordingly determine the weight of the unknown weight object.

No. of Pages : 21 No. of Claims : 11

(12) PATENT APPLICATION PUBLICATION
(21) Application No.3355/DEL/2013 A
(19) INDIA
(22) Date of filing of Application :15/11/2013
(43) Publication Date : 22/05/2015

(54) Title of the invention : FIRE CONTROL UNIT

(51) International classification :A62C
(31) Priority Document No :NA
(32) Priority Date :NA
(33) Name of priority country :NA
(86) International Application No :NA
Filing Date :NA
(87) International Publication No : NA
(61) Patent of Addition to Application Number :NA
Filing Date :NA
(62) Divisional to Application Number :NA
Filing Date :NA

(71)**Name of Applicant :**
1)DIRECTOR GENERAL, DEFENCE RESEARCH & DEVELOPMENT ORGANIZATION
Address of Applicant :Ministry of Defence, Govt. of India, Room No 348, B-Wing, DRDO Bhawan, Rajaji Marg, New Delhi 110001, Delhi India
(72)**Name of Inventor :**
1)KUMAR, Hemant
2)LAL, Banwari
3)RAKHRA, Neeta
4)CHAWLA, Anil Kumar

(57) Abstract :
A fire control unit (102) for ascertaining presence of fire in an aircraft is described herein. In one implementation the fire control unit (102) includes an analog-to-digital converter (106) to receive analog signals generated from a plurality of sensors (104), where the analog signals correspond to temperature a region of the aircraft, measured by each of the plurality of sensors (104); and convert the analog signals to digital signals of a pre-determined bit width. The fire control unit (102) also includes a signal processing unit (108), coupled to the analog-to-digital converter (104), to determine voltage corresponding to the digital signals to be in a pre-determined voltage range for a pre-determined time interval, for ascertaining the presence of fire in the region.

No. of Pages : 24 No. of Claims : 15

(12) PATENT APPLICATION PUBLICATION
(21) Application No.35/DELNP/2015 A
(19) INDIA
(22) Date of filing of Application :02/01/2015
(43) Publication Date : 22/05/2015

(54) Title of the invention : NODAL CONSTRUCTIVE SYSTEM OF RAPID ASSEMBLY FOR LOAD BEARING STRUCTURES BUILDINGS AND ARTIFACTS OF MULTI PURPOSE USE

(51) International classification :E04B1/19,E04B1/24,F16B7/18
(31) Priority Document No :BS2012A000104
(32) Priority Date :06/07/2012
(33) Name of priority country :Italy
(86) International Application No :PCT/IB2013/055450
Filing Date :03/07/2013
(87) International Publication No :WO 2014/006578
(61) Patent of Addition to Application Number :NA
Filing Date :NA
(62) Divisional to Application Number :NA
Filing Date :NA

(71)**Name of Applicant :**
1)PURITANI Michelangelo
Address of Applicant :Via Laura Cereto 5 I 25121 Brescia Italy
2)PETISSI Alessandra
(72)**Name of Inventor :**
1)PURITANI Michelangelo
2)PETISSI Alessandra

(57) Abstract :
A nodal system (30) for a load bearing structure(100) comprising connection sections (19,19) of beams (10,10) converging with each other towards a node (101) so as to form an interstitial space. The nodal system (30) also comprises a locking key (40) having an input configuration wherein it is insertable in the interstitial space and a locking configuration rotated with respect to the input configuration wherein it is suitable for making a mechanical connection between the connection sections (19,19) of the beams (10,10). The nodal system (30) also has retention means (18,18,48,108) for connecting the locking key (40) to the connection sections (19,19) of the beams (10,10) so as to make them integral the one with the other.

No. of Pages : 47 No. of Claims : 15

(12) PATENT APPLICATION PUBLICATION
(19) INDIA
(22) Date of filing of Application :14/07/2014
(21) Application No.5852/DELNP/2014 A
(43) Publication Date : 22/05/2015

(54) Title of the invention : SHELL MOULD FOR MANUFACTURING AIRCRAFT TURBOMACHINE BLADED ELEMENTS USING THE LOST WAX MOULDING TECHNIQUE AND COMPRISING SCREENS THAT FORM HEAT ACCUMULATORS

(51) International classification :B22C9/04,B22C9/22
(31) Priority Document No :1250677
(32) Priority Date :24/01/2012
(33) Name of priority country :France
(86) International Application No :PCT/FR2013/050134
Filing Date :22/01/2013
(87) International Publication No :WO 2013/110889
(61) Patent of Addition to Application Number :NA
Filing Date :NA
(62) Divisional to Application Number :NA
Filing Date :NA

(71)**Name of Applicant :**
1)SNECMA
Address of Applicant :2 boulevard du Gnral Martial Valin F 75015 Paris France
(72)**Name of Inventor :**
1)GUERCHE Didier
2)DALON Thibault

(57) Abstract :
The present invention relates to a shell mould (200) for manufacturing aircraft turbomachine bladed elements using the lost wax moulding technique and comprising: shell mould bladed elements (1b) comprising a blade portion (2b) situated between a first end part (4b) delimiting the impression of a platform (8b) and a second end part (6b) delimiting the impression of another platform (8b) the blade portion comprising a trailing edge zone (30b); a metal feeder (12b) having a central axis (14b) around which the bladed elements (1b) are distributed; and according to the invention the shell mould is equipped with one or a number of screens (29b) that form accumulators of heat and are arranged in a shell mould interior space (28b) facing the inwardly directed trailing edge zones (30b).

No. of Pages : 52 No. of Claims : 12

(12) PATENT APPLICATION PUBLICATION
(19) INDIA
(22) Date of filing of Application :02/01/2015
(21) Application No.39/DELNP/2015 A
(43) Publication Date : 22/05/2015

(54) Title of the invention : TRANSCEIVER FRONT END

(51) International classification :H04B1/52
(31) Priority Document No :NA
(32) Priority Date :NA
(33) Name of priority country :NA
(86) International Application No :PCT/EP2012/063429
Filing Date :09/07/2012
(87) International Publication No :WO 2014/008919
(61) Patent of Addition to Application Number :NA
Filing Date :NA
(62) Divisional to Application Number :NA
Filing Date :NA

(71)**Name of Applicant :**
1)TELEFONAKTIEBOLAGET L M ERICSSON (PUBL)
Address of Applicant :S 164 83 Stockholm Sweden
(72)**Name of Inventor :**
1)ANDERSSON Stefan
2)DIN Imad ud
3)SJ–LAND Henrik
4)TIRED Tobias
5)WERNEHAG Johan
6)ECKERBERT Daniel

(57) Abstract :
A transceiver front end of a communication device is disclosed. The transceiver front end is connectable to a signal transmission and reception arrangement adapted to transmit a transmit signal having a transmit frequency and to receive a receive signal having a receive frequency to a transmitter adapted to produce the transmit signal and to a receiver adapted to process the receive signal. The transceiver front end comprises a transmit frequency blocking arrangement and a receive frequency blocking arrangement. The transmit frequency blocking arrangement has a blocking frequency interval associated with the transmit frequency and a non blocking frequency interval associated with the receive frequency and is adapted to block passage of transmit frequency signals between the signal transmission and reception arrangement and the receiver The receive frequency blocking arrangement has a blocking frequency interval associated with the receive frequency and a non blocking frequency interval associated with the transmit frequency and is adapted to block passage of receive frequency signals between the signal transmission and reception arrangement and the transmitter. The transmit frequency blocking arrangement comprises a network of passive components comprising at least one transformer and a first filter arrangement adapted to have a higher impedance value at the transmit frequency than at the receive frequency. The receive frequency blocking arrangement comprises a second filter arrangement adapted to have a higher impedance value at the transmit frequency than at the receive frequency and a third filter arrangement adapted to have a higher impedance value at the receive frequency than at the transmit frequency.

No. of Pages : 39 No. of Claims : 19

(12) PATENT APPLICATION PUBLICATION
(19) INDIA
(22) Date of filing of Application :02/01/2015
(21) Application No.52/DELNP/2015 A
(43) Publication Date : 22/05/2015

(54) Title of the invention : IMAGING ELEMENT AND IMAGING DEVICE

(51) International classification :G02B7/28,G02B7/34,G03B13/36
(31) Priority Document No :2012129207
(32) Priority Date :06/06/2012
(33) Name of priority country :Japan
(86) International Application No :PCT/JP2013/065216
Filing Date :31/05/2013
(87) International Publication No :WO 2013/183561
(61) Patent of Addition to Application Number :NA
Filing Date :NA
(62) Divisional to Application Number :NA
Filing Date :NA

(71)**Name of Applicant :**
1)NIKON CORPORATION
Address of Applicant :12 1 Yurakucho 1 chome Chiyoda ku Tokyo 1008331 Japan
(72)**Name of Inventor :**
1)MURATA Hironobu

(57) Abstract :
This imaging element is provided with multiple first light receiving units arranged two dimensionally in a first direction and a second direction different from the first direction and a light receiving unit which is arranged between four of the aforementioned first light receiving units that are adjacent in the first direction and the second direction and which have a light blocking member in a portion thereof.

No. of Pages : 35 No. of Claims : 10

(12) PATENT APPLICATION PUBLICATION
(19) INDIA
(22) Date of filing of Application :14/07/2014
(21) Application No.5858/DELNP/2014 A
(43) Publication Date : 22/05/2015

(54) Title of the invention : MANUFACTURING METHOD OF BAG BODY WITH A GRANULAR FILLING

(51) International classification :B29D22/00,B29C33/38,B29C70/70
(31) Priority Document No :2012005972
(32) Priority Date :16/01/2012
(33) Name of priority country :Japan
(86) International Application No :PCT/IB2013/000042
Filing Date :14/01/2013
(87) International Publication No :WO 2013/108106
(61) Patent of Addition to Application Number :NA
Filing Date :NA
(62) Divisional to Application Number :NA
Filing Date :NA

(71)**Name of Applicant :**
1)TOYOTA JIDOSHA KABUSHIKI KAISHA
Address of Applicant :1 Toyota cho Toyota shi Aichi ken 471 8571 Japan
(72)**Name of Inventor :**
1)MATSUOKA Hirofumi

(57) Abstract :
A manufacturing method of a bag body that has a bag shaped member made of an elastic and airtight material and a granular substance filled inside of the bag shaped member includes a step of preparing a core for forming the bag shaped member by hardening the granular substance; a step of forming the bag shaped member by forming a covering made of the elastic and airtight material around the core; and a step of breaking up the core that is inside of the bag shaped member.

No. of Pages : 31 No. of Claims : 9

(12) PATENT APPLICATION PUBLICATION
(19) INDIA
(22) Date of filing of Application :14/07/2014
(21) Application No.5859/DELNP/2014 A
(43) Publication Date : 22/05/2015

(54) Title of the invention : PESTICIDAL MIXTURES INCLUDING SPIROHETEROCYCLIC PYRROLIDINE DIONES

(51) International classification :A01N43/22,A01N43/90,A01N47/18
(31) Priority Document No :12151447.5
(32) Priority Date :17/01/2012
(33) Name of priority country :EPO
(86) International Application No :PCT/EP2013/050794
Filing Date :17/01/2013
(87) International Publication No :WO 2013/107796
(61) Patent of Addition to Application Number :NA
Filing Date :NA
(62) Divisional to Application Number :NA
Filing Date :NA

(71)**Name of Applicant :**
1)SYNGENTA PARTICIPATIONS AG
Address of Applicant :Schwarzwaldallee 215 CH 4058 Basel Switzerland
(72)**Name of Inventor :**
1)BUCHHOLZ Anke
2)HATT Fabienne
3)RINDLISBACHER Alfred
4)MUEHLEBACH Michel

(57) Abstract :
A pesticidal mixture comprising as active ingredient a mixture of component A and component B wherein component A is a compound of formula (I) in which Q is i or ii wherein X Y and Z m and n A G and R are as defined as in claim 1 and component B is a compound selected from the insecticides as defined in claim 1. The present invention also relates to methods of using said mixtures for the control of plant pests.

No. of Pages : 61 No. of Claims : 17

(12) PATENT APPLICATION PUBLICATION
(19) INDIA
(22) Date of filing of Application :22/04/2014
(21) Application No.3188/DELNP/2014 A
(43) Publication Date : 22/05/2015

(54) Title of the invention : METHOD FOR OPERATING A POWER CONVERTER MODULE AND A DEVICE THEREFOR

(51) International classification :H02M1/32
(31) Priority Document No :NA
(32) Priority Date :NA
(33) Name of priority country :NA
(86) International Application No :PCT/SE2011/051492
Filing Date :09/12/2011
(87) International Publication No :WO 2013/085442
(61) Patent of Addition to Application Number :NA
Filing Date :NA
(62) Divisional to Application Number :NA
Filing Date :NA

(71)**Name of Applicant :**
1)TELEFONAKTIEBOLAGET LM ERICSSON (PUBL)
Address of Applicant :S 164 83 Stockholm Sweden
(72)**Name of Inventor :**
1)PERSSON Oscar
2)KARLSSON Magnus
3)MALMBERG Jonas

(57) Abstract :
The present disclosure relates to methods a system and a module for operating a power converter module (1) the power converter module (1) comprises a voltage converter (4) an output circuitry (7) and a processing circuitry (8) operable for controlling the voltage converter (4). According to an embodiment the method comprises transmitting (10) a first status signal representing operating parameters of the voltage converter (4) to the processing circuitry (8). Determining (11) whether the status of the voltage converter (4) is acceptable or unacceptable. The method also comprises transmitting (12) a second status signal representing the operating parameters of the output circuitry (7) to the processing circuitry (8). The method also comprises determining (13) if the second status signal is above a predetermined threshold value. When the second status signal is above said predetermined threshold value and the status of the voltage converter (4) is acceptable (14) entering a peak output mode (15). The peak output mode (15) involves determining (16) based on a maximum output voltage if the output voltage is allowed to increase. If allowed increasing (17) the output voltage and operating (18) the voltage converter (4) at maximum power dissipation as long as the status of the voltage converter (4) is acceptable and the second status signal is above said predetermined threshold value (19).

No. of Pages : 29 No. of Claims : 14

(12) PATENT APPLICATION PUBLICATION
(19) INDIA
(22) Date of filing of Application :23/04/2014
(21) Application No.3265/DELNP/2014 A
(43) Publication Date : 22/05/2015

(54) Title of the invention : PROCESS FOR THE COATING OF TEXTILES

(51) International classification :D06N3/14,D06N3/00,D06N3/02
(31) Priority Document No :PCT/CN2011/001733
(32) Priority Date :18/10/2011
(33) Name of priority country :China
(86) International Application No :PCT/EP2012/070480
Filing Date :16/10/2012
(87) International Publication No:WO 2013/057099
(61) Patent of Addition to Application Number :NA
Filing Date :NA
(62) Divisional to Application Number :NA
Filing Date :NA

(71)**Name of Applicant :**
1)BAYER INTELLECTUAL PROPERTY GMBH
Address of Applicant :Alfred Nobel Strasse 10 40789 Monheim am Rhein Germany
(72)**Name of Inventor :**
1)IRNICH Rolf
2)ZHAO Xuehui

(57) Abstract :
A process for the production of coated textiles comprises at least the steps of a) bringing a textile substrate into contact with an aqueous dispersion A comprising at least one salt and at least one modified cellulose b) bringing a textile substrate into contact with an aqueous dispersion B comprising at least one polymer selected from the group consisting of polyurethane polyacrylate and polybutadiene and c) precipitation of the polyurethane in or on the textile substrate. The salt of dispersion A is an organic onium salt of one or more elements of the fifth main group of the periodic table of the elements. The invention further relates to a coated textile obtainable by a process according to the invention and to the use of organic onium salts of one or more elements of the fifth main group of the periodic table of the elements for the production of coated textiles.

No. of Pages : 31 No. of Claims : 15

(12) PATENT APPLICATION PUBLICATION
(19) INDIA
(22) Date of filing of Application :13/01/2012
(21) Application No.395/DELNP/2012 A
(43) Publication Date : 22/05/2015

(54) Title of the invention : LED FLOODLIGHT

(51) International classification :H01L
(31) Priority Document No :CR2009A000029 (IT)
(32) Priority Date :27/07/2009
(33) Name of priority country :Italy
(86) International Application No :PCT/IB2010/001810
Filing Date :21/07/2010
(87) International Publication No :WO 2011/012963
(61) Patent of Addition to Application Number :NA
Filing Date :NA
(62) Divisional to Application Number :NA
Filing Date :NA

(71)**Name of Applicant :**
1)VENTURINI, FRANCO
Address of Applicant :VIALE LOMBARDIA, 9 20090 BUCCINASCO (MI) ITALY
(72)**Name of Inventor :**
1)VENTURINI, FRANCO

(57) Abstract :
A LED floodlight (1), comprising: - a plurality of LEDs (3) suitably arranged for use; - an electrical circuit (4) for powering said plurality of LEDs (3); - a finishing casing (5); -means of electrical connection (6) to a power supply network; characterized in that it comprises a stratified sheet (2), folded so as to suitably orient the beam from the floodlight (1), wherein said sheet (2) simultaneously serves as a mechanical support and as an electronic power and control board for said plurality of LEDs (3) and said electrical circuit (4) is obtained directly thereon.

No. of Pages : 18 No. of Claims : 12

(12) PATENT APPLICATION PUBLICATION
(19) INDIA
(22) Date of filing of Application :14/07/2014
(21) Application No.5870/DELNP/2014 A
(43) Publication Date : 22/05/2015

(54) Title of the invention : DISPLAY APPARATUS AND METHOD OF CHANGING SCREEN MODE USING THE SAME

(51) International classification :G06F3/01,G06F3/14
(31) Priority Document No :1020110135333
(32) Priority Date :15/12/2011
(33) Name of priority country :Republic of Korea
(86) International Application No :PCT/KR2012/010895
Filing Date :14/12/2012
(87) International Publication No :WO 2013/089476
(61) Patent of Addition to Application Number :NA
Filing Date :NA
(62) Divisional to Application Number :NA
Filing Date :NA

(71)**Name of Applicant :**
1)SAMSUNG ELECTRONICS CO. LTD.
Address of Applicant :129 Samsung ro Yeongtong gu Suwon si Gyeonggi do 443 742 Republic of Korea
(72)**Name of Inventor :**
1)KWAK Ji yeon
2)KANG Kyung a
3)KIM Hyun jin
4)SEO Joon kyu

(57) Abstract :
A display apparatus and a method of changing a screen mode using the display apparatus including a display unit which is bendable by external pressure a sensing unit which is installed in the display unit to sense a bending direction of the display unit and a controller which changes a screen mode of an object displayed on the display unit according to the bending direction.

No. of Pages : 33 No. of Claims : 15

(12) PATENT APPLICATION PUBLICATION
(21) Application No.5864/DELNP/2014 A
(19) INDIA
(22) Date of filing of Application :14/07/2014
(43) Publication Date : 22/05/2015

(54) Title of the invention : COIN PROCESSING DEVICE

(51) International classification :G07D3/06,G07D3/00
(31) Priority Document No :2012005964
(32) Priority Date :16/01/2012
(33) Name of priority country :Japan
(86) International Application No :PCT/JP2012/080787
Filing Date :28/11/2012
(87) International Publication No :WO 2013/108492
(61) Patent of Addition to Application Number :NA
Filing Date :NA
(62) Divisional to Application Number :NA
Filing Date :NA

(71)**Name of Applicant :**
1)OKI ELECTRIC INDUSTRY CO. LTD.
Address of Applicant :1 7 12 Toranomon Minato ku Tokyo 1058460 Japan
(72)**Name of Inventor :**
1)SUETOMI Kazuo
2)YANO Tatsuya

(57) Abstract :
Provided is a coin processing device which is capable of rapidly ejecting a coin which has been transported by way of a rotating member from an ejection slot during rotation of the rotating member. This coin processing device is provided with a rotating member which transports a coin upon a transport channel by way of rotation an ejection slot which is provided upon the transport channel and into which the coin transported by way of the rotating member drops and an opening and closing member which rotates centered around a rotational axis of the downstream side of the transport direction of the ejection slot between a closed position which blocks the ejection slot and an open position which opens the ejection slot so that the coin drops; and is characterized in that: the rotating member has an annular rib which is provided annularly along a circumferential direction on the outer peripheral portion which transports the coin upon the transport path using a cutout portion formed upon a lower portion of the annular rib; the open position is a position that intersects the annular rib; and the opening and closing member when positioned at the open position is positioned adjacent to the annular rib in a radial direction of the rotating member so as to allow rotation of the rotating member.

No. of Pages : 49 No. of Claims : 8

(12) PATENT APPLICATION PUBLICATION
(19) INDIA
(22) Date of filing of Application :14/07/2014
(21) Application No.5865/DELNP/2014 A
(43) Publication Date : 22/05/2015

(54) Title of the invention : PREVENTION AND TREATMENT OF MYCOBACTERIUM INFECTION

(51) International classification :C12N15/62,C12N15/53,C12N15/54
(31) Priority Document No :61/579166
(32) Priority Date :22/12/2011
(33) Name of priority country :U.S.A.
(86) International Application No :PCT/AU2012/001569
Filing Date :20/12/2012
(87) International Publication No :WO 2013/091004
(61) Patent of Addition to Application Number :NA
Filing Date :NA
(62) Divisional to Application Number :NA
Filing Date :NA

(71)**Name of Applicant :**
1)THE UNIVERSITY OF SYDNEY
Address of Applicant :Parramatta Road The University of Sydney New South Wales 2006 Australia
2)CENTENARY INSTITUTE OF CANCER MEDICINE AND CELL BIOLOGY
(72)**Name of Inventor :**
1)TRICCAS James Anthony
2)PINTO NADANACHANDRAN Rachel
3)BRITTON Warwick John

(57) Abstract :
Mycobacterium tuberculosisThe invention relates to the identification of antigens including Mycobacterium sulphate assimilation pathway components such as CysD for preventing and treating Mycobacterium infection especially but not exclusively infection; to expression systems including live Mycobacterium for expression of said antigens for prevention and treatment of said infection; and to use of said antigens and expression systems for prevention and treatment of said infection.

No. of Pages : 109 No. of Claims : 14

(12) PATENT APPLICATION PUBLICATION
(19) INDIA
(22) Date of filing of Application :14/07/2014
(21) Application No.5866/DELNP/2014 A
(43) Publication Date : 22/05/2015

(54) Title of the invention : LIPOSOMAL CHLORITE OR CHLORATE COMPOSITIONS

(51) International classification :A61K9/127,A61K33/20
(31) Priority Document No :61/579326
(32) Priority Date :22/12/2011
(33) Name of priority country :U.S.A.
(86) International Application No :PCT/IB2012/057645
Filing Date :21/12/2012
(87) International Publication No :WO 2013/093891
(61) Patent of Addition to Application Number :NA
Filing Date :NA
(62) Divisional to Application Number :NA
Filing Date :NA

(71)**Name of Applicant :**
1)NUVO RESEARCH GMBH
Address of Applicant :Deutscher Platz 5 c 04103 Leipzig Germany
(72)**Name of Inventor :**
1)MARTIN Rainer
2)ARNHOLD J¼rgen
3)SEIFERT Robert
4)KING SMITH Dominic
5)DESAI Tejas
6)WAGNER Andreas

(57) Abstract :
The present application includes liposomes and liposomal compositions that comprise chlorite chlorate or a mixture thereof entrapped inside the liposome core methods for their preparation and methods of use in particular as medicaments.

No. of Pages : 140 No. of Claims : 61

(12) PATENT APPLICATION PUBLICATION
(19) INDIA
(22) Date of filing of Application :14/07/2014
(21) Application No.5868/DELNP/2014 A
(43) Publication Date : 22/05/2015

(54) Title of the invention : PESTICIDAL MIXTURES INCLUDING SPIROHETEROCYCLIC PYRROLIDINE DIONES

(51) International classification :A01N43/90,A01N37/42
(31) Priority Document No :12151445.9
(32) Priority Date :17/01/2012
(33) Name of priority country :EPO
(86) International Application No :PCT/EP2013/050793
Filing Date :17/01/2013
(87) International Publication No :WO 2013/107795
(61) Patent of Addition to Application Number :NA
Filing Date :NA
(62) Divisional to Application Number :NA
Filing Date :NA

(71)**Name of Applicant :**
1)SYNGENTA PARTICIPATIONS AG
Address of Applicant :Schwarzwaldallee 215 CH 4058 Basel Switzerland
(72)**Name of Inventor :**
1)BUCHHOLZ Anke
2)HATT Fabienne
3)RINDLISBACHER Alfred
4)MUEHLEBACH Michel

(57) Abstract :
A pesticidal mixture comprising as active ingredient a mixture of component A and component B wherein component A is a compound of formula (I) in which Q is i or ii wherein X Y and Z m and n A G and R are as defined as in claim 1 and component B is a compound selected from the insecticides as defined in claim 1.The present invention also relates to methods of using said mixtures for the control of plant pests.

No. of Pages : 66 No. of Claims : 17

(12) PATENT APPLICATION PUBLICATION
(19) INDIA
(22) Date of filing of Application :14/07/2014
(21) Application No.5869/DELNP/2014 A
(43) Publication Date : 22/05/2015

(54) Title of the invention : COMBINATION OF A RTK INHIBITOR WITH AN ANTI ESTROGEN AND USE THEREOF FOR THE TREATMENT OF CANCER

(51) International classification :A61K31/138,A61K31/4535,A61K31/4709
(31) Priority Document No :61/593047
(32) Priority Date :31/01/2012
(33) Name of priority country :U.S.A.
(86) International Application No :PCT/US2013/023781
Filing Date :30/01/2013
(87) International Publication No :WO 2013/116293
(61) Patent of Addition to Application Number :NA
Filing Date :NA
(62) Divisional to Application Number :NA
Filing Date :NA

(71)**Name of Applicant :**
1)NOVARTIS AG
Address of Applicant :Lichtstrasse 35 CH 4056 Basel Switzerland
(72)**Name of Inventor :**
1)YOVINE Alejandro
2)SQUIRES Matthew
3)REDDICK Catherine
4)ZHANG Yong

(57) Abstract :
A pharmaceutical combination comprising (a) a RTK inhibitor selected from the group consisting of compounds of Formula I or a tautomer thereof compounds of Formula II or a tautomer thereof compounds of Formula III or a tautomer thereof a pharmaceutically acceptable salt of the compound a pharmaceutically acceptable salt of the tautomer or a mixture thereof; and (b) one or more anti estrogen compounds or a pharmaceutically acceptable salt thereof; such as tamoxifen toremifene fulvestrant raloxifene or raloxifene hydrochloride; the uses of such combination in the treatment or prevention of proliferative diseases; and methods of treating a subject suffering from a proliferative disease; and methods of treating a subject suffering from a proliferative disease comprising administering a therapeutically effective amount of such combination.

No. of Pages : 55 No. of Claims : 24

(12) PATENT APPLICATION PUBLICATION
(21) Application No.3210/DELNP/2014 A
(19) INDIA
(22) Date of filing of Application :22/04/2014
(43) Publication Date : 22/05/2015

(54) Title of the invention : DIVIDED MULTIMEDIA MESSAGING DELIVERY

(51) International classification :H04L12/58,H04L29/06
(31) Priority Document No :NA
(32) Priority Date :NA
(33) Name of priority country :NA
(86) International Application No :PCT/SE2011/051383
Filing Date :17/11/2011
(87) International Publication No :WO 2013/074006
(61) Patent of Addition to Application Number :NA
Filing Date :NA
(62) Divisional to Application Number :NA
Filing Date :NA

(71)**Name of Applicant :**
1)TELEFONAKTIEBOLAGET L M ERICSSON (PUBL)
Address of Applicant :S 164 83 Stockholm Sweden
(72)**Name of Inventor :**
1)SKOG Robert
2)MOVANDER Joakim

(57) Abstract :
Method and apparatus for sending a large Multimedia Message such as a MMS from a first terminal (10) to at least one second terminal (14) via a first network node (12) comprised in a communication network. The first network node (12) receives (30) the Multimedia Message from the first terminal (10) and divides (31) the Multimedia Message into a first part and at least one additional part. Next the first network node (12) adds (32) to the first part a reference to the at least one additional part and sends (33) the first part to the at least one second terminal (14). The first network node (12) then sends (34) the at least one additional part to the at least one second terminal (14) when requested by the at least one second terminal.

No. of Pages : 38 No. of Claims : 33

(12) PATENT APPLICATION PUBLICATION
(21) Application No.3367/DEL/2013 A
(19) INDIA
(22) Date of filing of Application :18/11/2013
(43) Publication Date : 22/05/2015

(54) Title of the invention : HERBAL TOOTHPASTE FOR PROTECTION OF TOTAL ORAL HEALTH

(51) International classification :A61K
(31) Priority Document No :NA
(32) Priority Date :NA
(33) Name of priority country :NA
(86) International Application No :NA
Filing Date :NA
(87) International Publication No : NA
(61) Patent of Addition to Application Number :NA
Filing Date :NA
(62) Divisional to Application Number :NA
Filing Date :NA

(71)**Name of Applicant :**
1)Balwant Rai
Address of Applicant :Vill-Bhangu, P.O.-Sahuwala 1, District-Sirsa, (Haryana) , INDIA Haryana India
2)Jasdeep Kaur
(72)**Name of Inventor :**
1)Balwant Rai
2)Jasdeep Kaur

(57) Abstract :
A pleasant-tasting herbal toothpaste composition is effective for oral diseases and disorders including oral cancerous and pre-cancerous. The composition consists of curcumin, curry leaves , Allium sativum, Aloe vera and Tea tree oil; Elettaria cardamomum, Syzygium aromaticum ; Foenieulum vulgare, silica, Glycerol, sodium carboxymethyl-cellulose; sodium saccharin, Propyl Paraben, sodium lauroyl sarcosinate, calcium carbonate, flavoring agents such as coconut, grape fruit, orange, lime, lemon, mandarin, pineapple, strawberry, raspberry, mango, passion fruit, kiwi, apple, pear, peach, apricot, cherry, grapes, banana, cranberry, blueberry, black currant, red currant, gooseberry, lingon berries, thyme, basil, camille, valerian, fennel, parsley, spearmint, peppermint , chocolate etc.

No. of Pages : 23 No. of Claims : 28

(12) PATENT APPLICATION PUBLICATION
(21) Application No.5873/DELNP/2014 A
(19) INDIA
(22) Date of filing of Application :14/07/2014
(43) Publication Date : 22/05/2015

(54) Title of the invention : BEVERAGE MACHINE WITH A REMOVABLE MODULE

(51) International classification :A47J31/44
(31) Priority Document No :12151064.8
(32) Priority Date :13/01/2012
(33) Name of priority country :EPO
(86) International Application No :PCT/EP2013/050254
Filing Date :09/01/2013
(87) International Publication No :WO 2013/104643
(61) Patent of Addition to Application Number :NA
Filing Date :NA
(62) Divisional to Application Number :NA
Filing Date :NA

(71)**Name of Applicant :**
1)NESTEC S.A.
Address of Applicant :Av. Nestl 55 CH 1800 Vevey Switzerland
(72)**Name of Inventor :**
1)CAHEN Antoine
2)KRISTLBAUER J¼rgen
3)BESSON Fran§ois

(57) Abstract :
A beverage preparation machine (1) comprises: a body (2) having a body connector (10) and a beverage outlet for dispensing a beverage over a beverage dispensing area (27);and a module (3) having a disconnectable module connector (34) for removably connecting the module to the body via the body connector. The body connector (10) and the module connector (34) when connected are: fixed together by a magnetic field generating arrangement such as magnets (111 112 113) and a cooperating magnetic arrangement (341) so as to fasten the module to the body; and/or fastened together only at the module connector (34) that forms a foot (34) of the module (3) and that is mounted on the body connector (10) that forms a platform of the body (2) the module having a generally upright elongated face (33 33) that is adjacent to and faces the body and that is free from the body above the foot.

No. of Pages : 29 No. of Claims : 15

(12) PATENT APPLICATION PUBLICATION
(19) INDIA
(22) Date of filing of Application :14/07/2014
(21) Application No.5874/DELNP/2014 A
(43) Publication Date : 22/05/2015

(54) Title of the invention : PACKAGING FOR CONSUMABLE PRODUCTS AND METHODS FOR USING SAME

(51) International classification :B65D75/30,B65D75/58,B65D85/72
(31) Priority Document No :61/586204
(32) Priority Date :13/01/2012
(33) Name of priority country :U.S.A.
(86) International Application No :PCT/IB2013/050251
Filing Date :11/01/2013
(87) International Publication No :WO 2013/105055
(61) Patent of Addition to Application Number :NA
Filing Date :NA
(62) Divisional to Application Number :NA
Filing Date :NA

(71)**Name of Applicant :**
1)NESTEC S.A.
Address of Applicant :Avenue Nestle 55 CH 1800 Vevey Switzerland
(72)**Name of Inventor :**
1)HENTZEL Stephane
2)LONGSON Barry
3)MONTARRAS Marc

(57) Abstract :
Packages (10) for housing consumable products and methods of using same are provided. The packages (10) may be customized functional packages that are designed to prevent accidental spillage or leakage of a flowable consumable product housed therein. In a general embodiment flexible packages (10) are provided and include a body (12) defining a cavity (14) for housing a flowable product and a channel (16) for dispensing the flowable product from the cavity wherein the channel (16) has a length that is from about two to about four times a width of the channel. In another embodiment the channel (16) comprises a length to width ratio that is sufficient to prevent a liquid from leaking from the flexible package (10) without a force applied to the flexible package.

No. of Pages : 17 No. of Claims : 20

(12) PATENT APPLICATION PUBLICATION
(19) INDIA
(22) Date of filing of Application :22/04/2014
(21) Application No.3203/DELNP/2014 A
(43) Publication Date : 22/05/2015

(54) Title of the invention : ANISOTROPIC ELECTROMAGNETIC STEEL SHEET AND METHOD FOR PRODUCING SAME

(51) International classification :C22C38/00,C21D8/12,C22C38/06
(31) Priority Document No :2011247637
(32) Priority Date :11/11/2011
(33) Name of priority country :Japan
(86) International Application No :PCT/JP2012/079066
Filing Date :09/11/2012
(87) International Publication No :WO 2013/069754
(61) Patent of Addition to Application Number :NA
Filing Date :NA
(62) Divisional to Application Number :NA
Filing Date :NA

(71)**Name of Applicant :**
1)NIPPON STEEL & SUMITOMO METAL CORPORATION
Address of Applicant :6 1 Marunouchi 2 chome Chiyoda ku Tokyo 1008071 Japan
(72)**Name of Inventor :**
1)FUJIKURA Masahiro
2)USHIGAMI Yoshiyuki
3)MURAKAWA Tesshu
4)KANAO Shinichi
5)ATAKE Makoto
6)ICHIE Takeru
7)HORI Kojiro

(57) Abstract :
Provided is an anisotropic electromagnetic steel sheet comprising by mass% 0.005% or less of C 0.1% to 2.0% of Si 0.05 to 0.6% of Mn 0.100% or less of P and 0.5% or less of Al wherein the content of nonmagnetic precipitate AlN having an average diameter of 10 to 200 nm is by number density 10 precipitates/µm or less and the average flux density in the rolling direction and the direction perpendicular to rolling is 1.75 T or greater. This anisotropic electromagnetic steel sheet can be produced by two methods the method of hot rolling and annealing at a temperature between 750ºC and the Ac1 transformation temperature and the method of self annealing at a coil take up temperature of 780ºC or greater.

No. of Pages : 52 No. of Claims : 9

(12) PATENT APPLICATION PUBLICATION
(21) Application No.3282/DELNP/2014 A
(19) INDIA
(22) Date of filing of Application :23/04/2014
(43) Publication Date : 22/05/2015

(54) Title of the invention : NETWORK CONNECTIVITY METHODS AND SYSTEMS

(51) International classification :G06F15/16
(31) Priority Document No :13/244836
(32) Priority Date :26/09/2011
(33) Name of priority country :U.S.A.
(86) International Application No :PCT/US2012/057093
Filing Date :25/09/2012
(87) International Publication No :WO 2013/049051
(61) Patent of Addition to Application Number :NA
Filing Date :NA
(62) Divisional to Application Number :NA
Filing Date :NA

(71)**Name of Applicant :**
1)THERANOS INC.
Address of Applicant :1601 S California Avenue Palo Alto CA 94304 U.S.A.
(72)**Name of Inventor :**
1)BALWANI Sunny

(57) Abstract :
Methods and systems are provided for connecting an electronic device to a network. In some situations the electronic device connects to a first network provider and pings a first server having a static internet protocol address and a second server having a dedicated uniform resource locator. If the electronic device receives a response from the first and second server the electronic device maintains its connection to the first network provider. Otherwise the electronic device connects to a second network provider and pings the first and second servers.

No. of Pages : 46 No. of Claims : 30

(12) PATENT APPLICATION PUBLICATION
(21) Application No.3362/DEL/2013 A
(19) INDIA
(22) Date of filing of Application :18/11/2013
(43) Publication Date : 22/05/2015

(54) Title of the invention : BOARD FOOTBALL

(51) International classification :A63F
(31) Priority Document No :NA
(32) Priority Date :NA
(33) Name of priority country :NA
(86) International Application No :NA
Filing Date :NA
(87) International Publication No : NA
(61) Patent of Addition to Application Number :NA
Filing Date :NA
(62) Divisional to Application Number :NA
Filing Date :NA

(71)**Name of Applicant :**
1)SUBODH VARMA
Address of Applicant :816/3, EXPRESS GARDEN, VAIBHAV KHAND, INDIRAPURAM, GHAZIABAD-201010, UTTAR PRADESH, INDIA.
(72)**Name of Inventor :**
1)SUBODH VARMA

(57) Abstract :
The invention relates to an indoor game played between two players using a pair of dice and a board that is marked with different coloured circles and arrows. The aim of the players is to score a goal on the opponent by making the counter enter the rectangle marked towards the opponents side. The counter is moved sideways and forward or backward by the numbers shown on the two dices. A player tries to make the counter reach a circle of his colour that will take the counter to the end of the circle towards his goal.

No. of Pages : 6 No. of Claims : 3

(12) PATENT APPLICATION PUBLICATION
(21) Application No.3363/DEL/2013 A
(19) INDIA
(22) Date of filing of Application :18/11/2013
(43) Publication Date : 22/05/2015

(54) Title of the invention : TING TONG

(51) International classification :A63B
(31) Priority Document No :NA
(32) Priority Date :NA
(33) Name of priority country :NA
(86) International Application No :NA
Filing Date :NA
(87) International Publication No : NA
(61) Patent of Addition to Application Number :NA
Filing Date :NA
(62) Divisional to Application Number :NA
Filing Date :NA

(71)**Name of Applicant :**
1)SUBODH VARMA
Address of Applicant :816/3, EXPRESS GARDEN, VAIBHAV KHAND, INDIRAPURAM, GHAZIABAD-201010, UTTAR PRADESH, INDIA.
(72)**Name of Inventor :**
1)SUBODH VARMA

(57) Abstract :
The invention relates to an indoor game played between two players using a pair of dice and a set of cards. It is a game of serve and return just like the games of Tennis, Table Tennis and Badminton. Points are gained every time the opponent is unable to return the ball.

No. of Pages : 6 No. of Claims : 3

(12) PATENT APPLICATION PUBLICATION
(19) INDIA
(22) Date of filing of Application :02/01/2015
(21) Application No.45/DELNP/2015 A
(43) Publication Date : 22/05/2015

(54) Title of the invention : EXHAUST PASSAGE STRUCTURE FOR INTERNAL COMBUSTION ENGINE

(51) International classification :F02F1/42
(31) Priority Document No :2012219679
(32) Priority Date :01/10/2012
(33) Name of priority country :Japan
(86) International Application No :PCT/IB2013/002234
Filing Date :27/09/2013
(87) International Publication No :WO 2014/053908
(61) Patent of Addition to Application Number :NA
Filing Date :NA
(62) Divisional to Application Number :NA
Filing Date :NA

(71)**Name of Applicant :**
1)TOYOTA JIDOSHA KABUSHIKI KAISHA
Address of Applicant :1 Toyota cho Toyota shi Aichi ken 471 8571 Japan
(72)**Name of Inventor :**
1)SAKAMOTO Hironobu
2)HORIE Nobuhiko
3)SHITARA Tatsuo

(57) Abstract :
Inner exhaust passages (inner exhaust ports 4B and 4C) are provided with three or more curves 41 through 43 that extend toward downstream sides of exhaust gas flow and alternately curve to one side and the other side in directions of a cylinder center line C.

No. of Pages : 26 No. of Claims : 9

(12) PATENT APPLICATION PUBLICATION
(21) Application No.5880/DELNP/2014 A
(19) INDIA
(22) Date of filing of Application :14/07/2014
(43) Publication Date : 22/05/2015

(54) Title of the invention : MILK AND A PROCESS FOR ITS PREPARATION

(51) International classification :A23C9/14,A23C9/152,A23K1/16
(31) Priority Document No :20120032
(32) Priority Date :31/01/2012
(33) Name of priority country :Finland
(86) International Application No :PCT/FI2013/000004
Filing Date :31/01/2013
(87) International Publication No :WO 2013/113981
(61) Patent of Addition to Application Number :NA
Filing Date :NA
(62) Divisional to Application Number :NA
Filing Date :NA

(71)**Name of Applicant :**
1)BENEMILK LTD
Address of Applicant :Raisionkaari 55 FI 21200 Raisio Finland
(72)**Name of Inventor :**
1)HOLMA Merja

(57) Abstract :
An object of this invention is milk wherein the concentrations of paltimoleic acid and/oleic acid are higher than in traditional milk. At the same time the amounts of trans fatty acids and C6 C12 saturated fatty acids are lower than in traditional milk. The invention also relates to food products which contain the milk according to the invention or part of it. The milk according to the invention has been produced by a process wherein to a lactating animal is given a feed which contains inside and on the surface of feed raw material particles a fatty acid mixture wherein the content of saturated fatty acids is over 90%.

No. of Pages : 23 No. of Claims : 14

(12) PATENT APPLICATION PUBLICATION
(19) INDIA
(22) Date of filing of Application :13/01/2012
(21) Application No.413/DELNP/2012 A
(43) Publication Date : 22/05/2015

(54) Title of the invention : DEVICE FOR COLLECTING GASES EMITTED BY ALUMINUM ELECTROLYSIS TANKS AND ASSOCIATED ALUMINUM PRODUCTION SYSTEM

(51) International classification :F02G
(31) Priority Document No :09 55044
(32) Priority Date :20/07/2009
(33) Name of priority country :France
(86) International Application No :PCT/FR2010/051493
Filing Date :16/07/2010
(87) International Publication No : NA
(61) Patent of Addition to Application Number :NA
Filing Date :NA
(62) Divisional to Application Number :NA
Filing Date :NA

(71)**Name of Applicant :**
1)SOLIOS ENVIRONNEMENT
Address of Applicant :25-27 Boulevard de la Paix F-78100 Saint Germain En Laye France
(72)**Name of Inventor :**
1)MALARD Thierry
2)BOUHABILA El Hani

(57) Abstract :
The invention relates to a collection device (6) capable of collecting the gases emitted by multiple aluminum electrolysis tanks characterized in that it comprises at least one bypass loop (20) for a gas flow connected at each of the ends thereof to the collection device (6) said bypass loop (20) being capable of passing through a medium the temperature of which is lower than the temperature of the gas.

No. of Pages : 12 No. of Claims : 11

(12) PATENT APPLICATION PUBLICATION
(19) INDIA
(22) Date of filing of Application :17/01/2012
(21) Application No.486/DELNP/2012 A
(43) Publication Date : 22/05/2015

(54) Title of the invention : METHODS OF ATTENUATING THE LOSS OF FUNCTIONAL STATUS

(51) International classification :A61K 35/20
(31) Priority Document No :61/226,806
(32) Priority Date :20/07/2009
(33) Name of priority country :U.S.A.
(86) International Application No :PCT/US2010/042083
Filing Date :15/07/2010
(87) International Publication No :WO 2011/011252
(61) Patent of Addition to Application Number :NA
Filing Date :NA
(62) Divisional to Application Number :NA
Filing Date :NA

(71)**Name of Applicant :**
1)NESTEC S.A.
Address of Applicant :AVENUE NESTLE 55, CH-1800 VEVEY, SWITZERLAND
(72)**Name of Inventor :**
1)MILLER, KEVIN BURKE
2)JURK, INGO ARNE
3)ROUGHEAD, ZAMZAM, FARIBA

(57) Abstract :
Nutritional compositions and methods of using the nutritional compositions with exercise to attenuate the loss of functional status are provided. In a general embodiment, the present disclosure provides a nutritional composition including whey protein, and Vitamin D. The nutritional composition and exercise can be specifically used to attenuate the loss of functional status, especially in the elderly.

No. of Pages : 40 No. of Claims : 26

(12) PATENT APPLICATION PUBLICATION
(19) INDIA
(22) Date of filing of Application :02/01/2015
(21) Application No.51/DELNP/2015 A
(43) Publication Date : 22/05/2015

(54) Title of the invention : METHOD AND APPARATUS FOR CLUTCH PRESSURE CONTROL

(51) International classification :F16D48/02,F16D25/12
(31) Priority Document No :13/495443
(32) Priority Date :13/06/2012
(33) Name of priority country :U.S.A.
(86) International Application No :PCT/US2013/045322
Filing Date :12/06/2013
(87) International Publication No :WO 2014/007952
(61) Patent of Addition to Application Number :NA
Filing Date :NA
(62) Divisional to Application Number :NA
Filing Date :NA

(71)**Name of Applicant :**
1)ALLISON TRANSMISSION INC.
Address of Applicant :One Allison Way Indianapolis IN 46222 U.S.A.
(72)**Name of Inventor :**
1)WILSON Thomas H.
2)LONG Charles F.
3)BROWN Travis A.
4)WEBER Darren J.

(57) Abstract :
A method apparatus and system for controlling transmission clutch and/or variator system pressures is provided. A transmission control unit and a pressure control device including an electro hydraulic valve and a pressure switch cooperate to provide self calibrating clutch and/or variator pressure control systems.

No. of Pages : 66 No. of Claims : 27

(12) PATENT APPLICATION PUBLICATION
(21) Application No.6560/DELNP/2014 A
(19) INDIA
(22) Date of filing of Application :05/08/2014
(43) Publication Date : 22/05/2015

(54) Title of the invention : SUBMARINE STRUCTURE COMPRISING A SOUND BAFFLE FOR THE INTEGRATION OF A SONAR RECEIVING ANTENNA ON A THIN SHELL

(51) International classification :B63G8/39,G10K11/00
(31) Priority Document No :1251494
(32) Priority Date :17/02/2012
(33) Name of priority country :France
(86) International Application No :PCT/EP2013/053095
Filing Date :15/02/2013
(87) International Publication No :WO 2013/121007
(61) Patent of Addition to Application Number :NA
Filing Date :NA
(62) Divisional to Application Number :NA
Filing Date :NA

(71)**Name of Applicant :**
1)DCNS
Address of Applicant :40 42 rue du Docteur Finlay F 75015 Paris France
(72)**Name of Inventor :**
1)AUDOLY Christian
2)REYNARD Fran§ois

(57) Abstract :
The invention relates to a submarine structure (1) comprising a thick inner shell (2) and a thin outer shell (3) with sonar receiving antenna means being placed on the sides of said structure. The structure is characterised in that the sonar receiving antenna means comprise receiver means (4) secured to the outer surface of the thin shell (3) and sound baffle means (5) secured to the inner surface of the thin shell (3) opposite the receiver means (4).

No. of Pages : 9 No. of Claims : 10

(12) PATENT APPLICATION PUBLICATION
(19) INDIA
(22) Date of filing of Application :05/08/2014
(21) Application No.6561/DELNP/2014 A
(43) Publication Date : 22/05/2015

(54) Title of the invention : SEMICONDUCTOR SEALING COMPOSITION SEMICONDUCTOR DEVICE AND METHOD FOR PRODUCING SAME AND POLYMER AND METHOD FOR PRODUCING SAME

(51) International classification :H01L21/312,C08G73/04,H01L21/768
(31) Priority Document No :2012007151
(32) Priority Date :17/01/2012
(33) Name of priority country :Japan
(86) International Application No :PCT/JP2013/050686
Filing Date :16/01/2013
(87) International Publication No :WO 2013/108791
(61) Patent of Addition to Application Number :NA
Filing Date :NA
(62) Divisional to Application Number :NA
Filing Date :NA

(71)**Name of Applicant :**
1)MITSUI CHEMICALS INC.
Address of Applicant :5 2 Higashi Shimbashi 1 chome Minato ku Tokyo 1057117 Japan
(72)**Name of Inventor :**
1)ONO Shoko
2)KAYABA Yasuhisa
3)TANAKA Hirofumi
4)KOHMURA Kazuo
5)SUZUKI Tsuneji
6)MIO Shigeru

(57) Abstract :
In the present invention a semiconductor sealing composition is provided said semiconductor sealing composition: having at least two cationic functional groups including a tertiary nitrogen atom and/or a quaternary nitrogen atom; containing a polymer with a weight average molecular weight of 2000 to 1000000 and a branching degree of at least 48%; and having a sodium and potassium content of not more than ten parts per billion by mass at the respective element standards.

No. of Pages : 58 No. of Claims : 15

(12) PATENT APPLICATION PUBLICATION
(21) Application No.6563/DELNP/2014 A
(19) INDIA
(22) Date of filing of Application :05/08/2014
(43) Publication Date : 22/05/2015

(54) Title of the invention : PAYMENT SYSTEM PAYMENT TERMINAL OF SAID SYSTEM AND ASSOCIATED PAYMENT METHOD

(51) International classification :G06Q20/28,G06Q20/36
(31) Priority Document No :12/00388
(32) Priority Date :09/02/2012
(33) Name of priority country :France
(86) International Application No :PCT/EP2013/052594
Filing Date :08/02/2013
(87) International Publication No :WO 2013/117726
(61) Patent of Addition to Application Number :NA
Filing Date :NA
(62) Divisional to Application Number :NA
Filing Date :NA

(71)**Name of Applicant :**
1)THALES
Address of Applicant :45 rue de Villiers F 92200 Neuilly Sur Seine France
(72)**Name of Inventor :**
1)DATHIS Thierry
2)LEONETTI Jean
3)RATIER Denis

(57) Abstract :
This payment system (10) comprises a payment terminal (12) and an electronic payment support (14) designed to interact with the payment terminal (12) the payment support (14) carrying an amount having a first residual value and comprises: a first rewritable memory (34) and a second fuse memory (36) comprising a plurality of bits (1 2 3 4 5 6 7 8) each capable of changing status a single time. The payment terminal (12) is programmed to deduce the first residual value from the joint reading of the first and second memories (34 36).

No. of Pages : 26 No. of Claims : 10

(12) PATENT APPLICATION PUBLICATION
(19) INDIA
(22) Date of filing of Application :14/07/2014
(21) Application No.5875/DELNP/2014 A
(43) Publication Date : 22/05/2015

(54) Title of the invention : TYRE AND WHEEL FOR A WASTE COLLECTION BIN

(51) International classification :B60C7/12,B60C15/024,B65F1/14
(31) Priority Document No :1250774
(32) Priority Date :26/01/2012
(33) Name of priority country :France
(86) International Application No :PCT/FR2013/050167
Filing Date :28/01/2013
(87) International Publication No :WO 2013/110904
(61) Patent of Addition to Application Number :NA
Filing Date :NA
(62) Divisional to Application Number :NA
Filing Date :NA

(71)**Name of Applicant :**
1)COMPAGNIE PLASTIC OMNIUM
Address of Applicant :19 avenue Jules Carteret F 69007 Lyon France
(72)**Name of Inventor :**
1)OLLIER Fabrice
2)VANDEMEULEBROUCKE Cdric

(57) Abstract :
The invention relates to a tyre intended to be fitted to a rim of a wheel of a waste collection bin said tyre (10) being of a generally annular shape and comprising: an outer belt (14) an outer surface of which forming a rolling surface (18); an inner belt (12) having a contact surface with the rim (20); the contact surface (20) being formed by the surface enclosing the vertices of a plurality of ribs (26 28) extending radially and projecting from the inner belt (12) of the tyre (10). The invention also relates to a wheel fitted with such a tyre.

No. of Pages : 13 No. of Claims : 12

(12) PATENT APPLICATION PUBLICATION
(19) INDIA
(22) Date of filing of Application :14/07/2014
(21) Application No.5877/DELNP/2014 A
(43) Publication Date : 22/05/2015

(54) Title of the invention : WIRELESS RELAY MODULE FOR MONITORING NETWORK STATUS

(51) International classification :H04W88/04,H04W24/02
(31) Priority Document No :13/352575
(32) Priority Date :18/01/2012
(33) Name of priority country :U.S.A.
(86) International Application No :PCT/US2013/020069
Filing Date :03/01/2013
(87) International Publication No :WO 2013/109409
(61) Patent of Addition to Application Number :NA
Filing Date :NA
(62) Divisional to Application Number :NA
Filing Date :NA

(71)**Name of Applicant :**
1)COVIDIEN LP
Address of Applicant :15 Hampshire Street Mansfield MA 02048 U.S.A.
(72)**Name of Inventor :**
1)WIESNER Joel D.
2)BREITWEISER Kenneth M.
3)HARRINGTON Stacey

(57) Abstract :
A wireless relay module for networked communications between a series of medical devices and a remote monitoring device. An interface circuit coupled to each medical device communicates with the wireless relay module via a wireless relay network. The relay module communicates with the remote monitoring device over an internet accessible wireless communication network. The controller determines a status of the networks. When the status indicates that the internet accessible wireless communications network is available a transmitter transmits medical device data over this network. When the internet accessible wireless communications network is not accessible another transmitter transmits the data to another wireless relay module. In addition the controller obtains status information the two networks and either transmits this information to one of the medical devices or prepares the information for display on a display of the wireless relay module.

No. of Pages : 44 No. of Claims : 20

(12) PATENT APPLICATION PUBLICATION
(19) INDIA
(22) Date of filing of Application :14/07/2014
(21) Application No.5878/DELNP/2014 A
(43) Publication Date : 22/05/2015

(54) Title of the invention : SYSTEM AND METHOD FOR ALERTING AND SUPPRESSION OF DETONATION AND/OR PRE IGNITION PHENOMENA IN INTERNAL COMBUSTION ENGINES BY MONITORING RPM FLUCTUATION

(51) International classification :F02D41/22
(31) Priority Document No :218127
(32) Priority Date :15/02/2012
(33) Name of priority country :Israel
(86) International Application No :PCT/IL2012/050502
Filing Date :04/12/2012
(87) International Publication No :WO 2013/121408
(61) Patent of Addition to Application Number :NA
Filing Date :NA
(62) Divisional to Application Number :NA
Filing Date :NA

(71)**Name of Applicant :**
1)ISRAEL AEROSPACE INDUSTRIES LTD.
Address of Applicant :Ben Gurion International Airport 70100 Lod Israel
(72)**Name of Inventor :**
1)GRUMER Bernard
2)LEVY Nathan

(57) Abstract :
An engine system with advance detection of detonation and / or pre ignition the system comprising an engine operative for propulsion of a vehicle by generating rotational motion whose rotational velocity over time is monitored; and a detonation and / or pre ignition detector operative to provide an alert for impending detonation and / or pre ignition of the engine if the rotational velocity fluctuates over time to an extent which is predetermined to be unsafe.

No. of Pages : 31 No. of Claims : 36

(12) PATENT APPLICATION PUBLICATION
(21) Application No.5879/DELNP/2014 A
(19) INDIA
(22) Date of filing of Application :14/07/2014
(43) Publication Date : 22/05/2015

(54) Title of the invention : RUMINANT FEED ENHANCING ENERGY METABOLISM IN MILK PRODUCTION

(51) International classification :A23K1/16,A23K1/18
(31) Priority Document No :20120031
(32) Priority Date :31/01/2012
(33) Name of priority country :Finland
(86) International Application No :PCT/FI2013/000005
Filing Date :31/01/2013
(87) International Publication No :WO 2013/113982
(61) Patent of Addition to Application Number :NA
Filing Date :NA
(62) Divisional to Application Number :NA
Filing Date :NA

(71)**Name of Applicant :**
1)BENEMILK LTD
Address of Applicant :Raisionkaari 55 FI 21200 Raisio Finland
(72)**Name of Inventor :**
1)HOLMA Merja

(57) Abstract :
The present invention relates to a feed which has a relatively hight total fat percentage and which contains inside and on the surface of feed raw material particles a fatty acid mixture rich in saturated free fatty acids. The invention is also directed to a process for preparing said feed to a method for increasing concentrations of protein and fat in milk and for increasing milk production of a lactating animal.

No. of Pages : 32 No. of Claims : 20

(12) PATENT APPLICATION PUBLICATION
(19) INDIA
(22) Date of filing of Application :01/01/2015
(21) Application No.6/DELNP/2015 A
(43) Publication Date : 22/05/2015

(54) Title of the invention : PROCESS FOR THE PREPARATION OF INGENOL -3- ANGELATE FROM 20 -DEOXY- INGENOL

(51) International classification :C07C67/00,C07C67/29,C07C69/533
(31) Priority Document No :61/672282
(32) Priority Date :16/07/2012
(33) Name of priority country :U.S.A.
(86) International Application No :PCT/EP2013/064643
Filing Date :11/07/2013
(87) International Publication No :WO 2014/012836
(61) Patent of Addition to Application Number :NA
Filing Date :NA
(62) Divisional to Application Number :NA
Filing Date :NA

(71)**Name of Applicant :**
1)LEO LABORATORIES LIMITED
Address of Applicant :285 Cashel Road Crumlin Dublin 12 Ireland
(72)**Name of Inventor :**
1)LIANG Xifu

(57) Abstract :
The present invention provides a method for preparing ingenol-3-angelate.

No. of Pages : 11 No. of Claims : 9

(12) PATENT APPLICATION PUBLICATION
(21) Application No.6569/DELNP/2014 A
(19) INDIA
(22) Date of filing of Application :05/08/2014
(43) Publication Date : 22/05/2015

(54) Title of the invention : ALIGNMENT STABLE ADJUSTABLE ANTENNA MOUNT

(51) International classification :H01Q15/14,H01Q1/12
(31) Priority Document No :13/403174
(32) Priority Date :23/02/2012
(33) Name of priority country :U.S.A.
(86) International Application No :PCT/US2012/066507
Filing Date :26/11/2012
(87) International Publication No :WO 2013/126108
(61) Patent of Addition to Application Number :NA
Filing Date :NA
(62) Divisional to Application Number :NA
Filing Date :NA

(71)**Name of Applicant :**
1)ANDREW LLC
Address of Applicant :1100 CommScope Place SE Hickory NC 28602 U.S.A.
(72)**Name of Inventor :**
1)RENILSON Ian
2)JEFFERSON James Michael
3)LEWRY Matthew

(57) Abstract :
An antenna mount is provided with a pivot base and a pivot saddle rotatably coupled to the pivot base by a pivot connection and at least one pivot arm connection. The pivot connection is provided with dual opposing conical countersunk head pivot connection bolts seated within conical countersunk pivot connection bolt holes of the pivot saddle the conical countersunk head pivot connection bolts extending through the conical countersunk pivot connection bolt holes of the pivot saddle to couple with the pivot base about a pivot axis.

No. of Pages : 24 No. of Claims : 20

(12) PATENT APPLICATION PUBLICATION
(19) INDIA
(22) Date of filing of Application :13/01/2012
(21) Application No.415/DELNP/2012 A
(43) Publication Date : 22/05/2015

(54) Title of the invention : A METHOD OF INHIBITING FORMATION OF DEPOSITS IN A MANUFACTURING SYSTEM

(51) International classification :B23B
(31) Priority Document No :61/225,347
(32) Priority Date :14/07/2009
(33) Name of priority country :U.S.A.
(86) International Application No :PCT/US2010/041961
Filing Date :14/07/2010
(87) International Publication No : NA
(61) Patent of Addition to Application Number :NA
Filing Date :NA
(62) Divisional to Application Number :NA
Filing Date :NA

(71)**Name of Applicant :**
1)HEMLOCK SEMICONDUCTOR CORPORATION
Address of Applicant :12334 Geddes Road Hemlock MI 48626 United States of America
(72)**Name of Inventor :**
1)DEHTIAR Max
2)GIARDINA Jason
3)VANDERHOVEL Jaime
4)HOFMEISTER Michael
5)MOLNAR Michael John
6)STRATTON Robert E.
7)PAWELKOWSKI Stephen

(57) Abstract :
A method inhibits formation of deposits on a cooling surface of an electrode. The electrode is used in a manufacturing system that deposits a material on a carrier body. The cooling surface comprises copper. The system includes a reactor defining a chamber. The electrode is at least partially disposed within the chamber and supports the carrier body. A circulation system in fluid communication with the electrode transports a coolant composition to and from the cooling surface. The coolant composition comprises a coolant and dissolved copper from the cooling surface. A filtration system is in fluid communication with the circulation system. The method heats the electrode. The cooling surface of the electrode is contacted with the coolant composition. The material is deposited on the carrier body and the coolant composition is filtered with the filtration system to remove at least a portion of the dissolved copper therefrom.

No. of Pages : 45 No. of Claims : 46

(12) PATENT APPLICATION PUBLICATION
(19) INDIA
(22) Date of filing of Application :05/08/2014
(21) Application No.6583/DELNP/2014 A
(43) Publication Date : 22/05/2015

(54) Title of the invention : COMPOSITIONS AND METHODS TO SELECT FOR REDUCED GRAIN MOISTURE IN MAIZE

(51) International classification :C12Q1/68,A01H1/04,A01H5/10
(31) Priority Document No :61/602188
(32) Priority Date :23/02/2012
(33) Name of priority country :U.S.A.
(86) International Application No :PCT/US2013/027306
Filing Date :22/02/2013
(87) International Publication No:WO 2013/126689
(61) Patent of Addition to Application Number :NA
Filing Date :NA
(62) Divisional to Application Number :NA
Filing Date :NA

(71)**Name of Applicant :**
1)E. I. DU PONT DE NEMOURS AND COMPANY
Address of Applicant :1007 Market Street Wilmington Delaware 19898 U.S.A.
2)PIONEER HI BRED INTERNATIONAL INC.
(72)**Name of Inventor :**
1)WILSON William A.
2)GARDNER Stuart
3)JAQUETH Jennifer S.
4)JONES Elizabeth S.
5)LI Bailin

(57) Abstract :
The invention relates to methods and compositions for identifying and selecting maize plants that have reduced grain moisture comprising detecting a marker allele located on chromosome 9. Maize plants generated by the methods of the invention are also a feature of the invention.

No. of Pages : 111 No. of Claims : 16

(12) PATENT APPLICATION PUBLICATION
(19) INDIA
(22) Date of filing of Application :05/08/2014
(21) Application No.6584/DELNP/2014 A
(43) Publication Date : 22/05/2015

(54) Title of the invention : EXPANDED GRATING FABRICATION DEVICE

(51) International classification :H01M4/74,B21D1/02,B21D31/04
(31) Priority Document No :2013009587
(32) Priority Date :22/01/2013
(33) Name of priority country :Japan
(86) International Application No :PCT/JP2013/070384
Filing Date :26/07/2013
(87) International Publication No :WO 2014/115357
(61) Patent of Addition to Application Number :NA
Filing Date :NA
(62) Divisional to Application Number :NA
Filing Date :NA

(71)**Name of Applicant :**
1)SHIN KOBE ELECTRIC MACHINERY CO. LTD.
Address of Applicant :8 1 Akashi cho Chuo ku Tokyo 1040044 Japan
(72)**Name of Inventor :**
1)HAGIWARA Takeo
2)TSUJI Naoki

(57) Abstract :
Provided is an expanded grating fabrication device whereby bending or twisting in an expanded grating is eliminated between an expansion working process of a lead strip which is primarily constituted of lead and the punching of lobe parts thereof and it is possible to convey the expanded grating in a flat state to the lobe part punch. An expanded grating fabrication device comprises: an expansion working means for expansion working a lead strip and forming a grating pattern thereupon; a lobe part punch means for forming lobe parts of the worked expanded grating by punching thereupon; a conveyance direction changing roll which is disposed part way through the conveyance path for the expanded grating from the expansion working means to the lobe part punch means; and a pair of vertically arranged flattening rolls which are disposed further downstream than this conveyance direction changing roll and pass the expanded grating. The conveyance direction changing roll further has either a maximum diameter in the axial central part of the roll or a maximum diameter in locations which are intermediate locations from the axial central part toward both end parts and which are equidistant from the central part. The surfaces of the pair of vertically arranged flattening rolls are both made of a resin.

No. of Pages : 23 No. of Claims : 1

(12) PATENT APPLICATION PUBLICATION
(19) INDIA
(22) Date of filing of Application :05/08/2014
(21) Application No.6586/DELNP/2014 A
(43) Publication Date : 22/05/2015

(54) Title of the invention : METHOD FOR OPERATING A BULK MATERIAL LOCK MEANS

(51) International classification :C10J3/30,B01J8/00,B01J3/02
(31) Priority Document No :10 2012 104 866.5
(32) Priority Date :05/06/2012
(33) Name of priority country :Germany
(86) International Application No :PCT/EP2013/061374
Filing Date :03/06/2013
(87) International Publication No :WO 2013/182516
(61) Patent of Addition to Application Number :NA
Filing Date :NA
(62) Divisional to Application Number :NA
Filing Date :NA

(71)**Name of Applicant :**
1)LAIR LIQUIDE SOCI‰T‰ ANONYME POUR LETUDE ET LEXPLOITATION DES PROC‰D‰S GEORGES CLAUDE
Address of Applicant :75 quai dOrsay F 75007 Paris France
(72)**Name of Inventor :**
1)JUDAS Frederic
2)LATH Erhard

(57) Abstract :
A method for operating a system of bulk material locks which are used for filling tanks or reactors under positive pressure wherein during depressurization of the locks the gas and the pressure energy in part are stored by pressure compensation with one or more pressure tanks and are reused during pressurization.

No. of Pages : 17 No. of Claims : 7

(12) PATENT APPLICATION PUBLICATION
(19) INDIA
(22) Date of filing of Application :05/08/2014
(21) Application No.6587/DELNP/2014 A
(43) Publication Date : 22/05/2015

(54) Title of the invention : COSMETIC COMPOSITION CARRIER CONTAINING URETHANE FOAM LAYER STRUCTURE

(51) International classification :A45D34/00,A61K8/03,A61K9/70
(31) Priority Document No :1020120004479
(32) Priority Date :13/01/2012
(33) Name of priority country :Republic of Korea
(86) International Application No :PCT/KR2013/000229
Filing Date :11/01/2013
(87) International Publication No :WO 2013/105804
(61) Patent of Addition to Application Number :NA
Filing Date :NA
(62) Divisional to Application Number :NA
Filing Date :NA

(71)**Name of Applicant :**
1)AMOREPACIFIC CORPORATION
Address of Applicant :181 2 ga Hangang ro Yongsan gu Seoul 140 777 Republic of Korea
(72)**Name of Inventor :**
1)CHOI Jung Sun
2)KIM Kyung Nam
3)CHOI Kyung Ho
4)CHOI Yeong Jin

(57) Abstract :
Disclosed are a cosmetic composition carrier containing a urethane foam layer structure and cosmetics including the cosmetic composition carrier that contains a cosmetic composition.

No. of Pages : 34 No. of Claims : 17

(12) PATENT APPLICATION PUBLICATION
(19) INDIA
(22) Date of filing of Application :05/08/2014
(21) Application No.6574/DELNP/2014 A
(43) Publication Date : 22/05/2015

(54) Title of the invention : METHOD FOR OPERATING A METERING APPARATUS

(51) International classification :F01N3/20
(31) Priority Document No :10 2012 002 059.7
(32) Priority Date :03/02/2012
(33) Name of priority country :Germany
(86) International Application No :PCT/EP2013/052044
Filing Date :01/02/2013
(87) International Publication No :WO 2013/113882
(61) Patent of Addition to Application Number :NA
Filing Date :NA
(62) Divisional to Application Number :NA
Filing Date :NA

(71)**Name of Applicant :**
1)EMITEC GESELLSCHAFT FR EMISSIONSTECHNOLOGIE MBH
Address of Applicant :Hauptstrae 128 53797 Lohmar Germany
(72)**Name of Inventor :**
1)BRCK Rolf
2)HODGSON Jan

(57) Abstract :
The invention relates to a method for operating a metering apparatus (1) for providing a liquid additive. At the minimum the metering apparatus has at least one pump (2) for pumping the additive from a tank (3) into a pressure accumulator (4) a metering valve (5) that is designed to provide additive present in the pressure accumulator (4) in a metered manner and a check valve (6) by means of which additive present in the pressure accumulator (4) can be led back into the tank (3). In the method first a metering demand is established in step a). Subsequently the pump (2) is activated in step b) in order to build up a pressure in the pressure accumulator (4). Then the pressure in the pressure accumulator (4) is set to a desired metering pressure (8). Thereafter the liquid additive is dispensed by the metering valve (5) in step d).

No. of Pages : 20 No. of Claims : 9

(12) PATENT APPLICATION PUBLICATION
(19) INDIA
(22) Date of filing of Application :05/08/2014
(21) Application No.6575/DELNP/2014 A
(43) Publication Date : 22/05/2015

(54) Title of the invention : SUPPORTING APPLIANCE AND BACKING ARRANGEMENT FOR USE IN FRICTION STIR WELDING

(51) International classification :B23K37/02,B23K20/12,B23K37/04
(31) Priority Document No :NA
(32) Priority Date :NA
(33) Name of priority country :NA
(86) International Application No :PCT/SE2012/050128
Filing Date :09/02/2012
(87) International Publication No :WO 2013/119155
(61) Patent of Addition to Application Number :NA
Filing Date :NA
(62) Divisional to Application Number :NA
Filing Date :NA

(71)**Name of Applicant :**
1)ESAB AB
Address of Applicant :Box 8004 S 402 77 Gteborg Sweden
(72)**Name of Inventor :**
1)PERSSON Christer

(57) Abstract :
Support device (20) meant to bear in supporting fashion on one or more work pieces in connection with friction stir welding comprising: A holder unit (30) a first support wheel (40) which can be rotated relative to the holder unit about a first rotational axis (R1) and a second support wheel (50) which can be rotated relative to the holder unit around a second rotational axis (R2) which is parallel to the said first rotational axis a support body (60) connected with the holder unit which is situated between support wheels and exhibits a support surface (61) turned outward and an endless flexible metal belt (21) which runs in a loop over the outer peripheral surfaces (41 51) of the support wheels and is in sliding contact with the support surface of the support device wherein the support devices are shaped to provide support as they bear on one or more work pieces with the outer peripheral surfaces of the support wheel and with the support surface of the support body resting against the work pieces via the metal belt. The invention also provides a backing arrangement comprising such a support device.

No. of Pages : 27 No. of Claims : 15

(12) PATENT APPLICATION PUBLICATION
(19) INDIA
(22) Date of filing of Application :05/08/2014
(21) Application No.6576/DELNP/2014 A
(43) Publication Date : 22/05/2015

(54) Title of the invention : BACKING ARRANGEMENT FOR USE IN FRICTION STIR WELDING

(51) International classification :B23K20/12,B23K37/02,B23K37/04
(31) Priority Document No :NA
(32) Priority Date :NA
(33) Name of priority country :NA
(86) International Application No :PCT/SE2012/050127
Filing Date :09/02/2012
(87) International Publication No :WO 2013/119154
(61) Patent of Addition to Application Number :NA
Filing Date :NA
(62) Divisional to Application Number :NA
Filing Date :NA

(71)**Name of Applicant :**
1)ESAB AB
Address of Applicant :Box 8004 S 402 77 Gteborg Sweden
(72)**Name of Inventor :**
1)LARSSON Rolf

(57) Abstract :
Backing arrangement (2) for supporting a welded seam extending on a curved path which is formed between two curved work pieces by friction stir welding with a welding tool separate from the backing arrangement which backing arrangement comprises a backing body (20) which is intended to bear upon the work pieces opposite said welding tool to assume at least a part of the compression force that is exerted by the welding tool against the work pieces to keep the material plasticized during the welding operation in the area of the welded seam. The backing body is equipped with a shoulder (21) which exhibits a bottom surface (22) turned outward via which the backing body is equipped to bear on the work pieces. A driving mechanism (50) is situated to rotate and/or oscillate the shoulder so that the bottom surface of the shoulder can thereby be made to carry out a rotating and/or oscillating motion against the work pieces for creating fictional heat in them.

No. of Pages : 22 No. of Claims : 14

(12) PATENT APPLICATION PUBLICATION
(19) INDIA
(22) Date of filing of Application :05/08/2014
(21) Application No.6577/DELNP/2014 A
(43) Publication Date : 22/05/2015

(54) Title of the invention : METHOD OF REJECTING A DEFECTIVE UNIT DOSE POUCH FROM A MANUFACTURING LINE

(51) International classification :B65B57/02,B65B9/04,B65B57/00
(31) Priority Document No :13/406127
(32) Priority Date :27/02/2012
(33) Name of priority country :U.S.A.
(86) International Application No :PCT/US2013/027753
Filing Date :26/02/2013
(87) International Publication No :WO 2013/130439
(61) Patent of Addition to Application Number :NA
Filing Date :NA
(62) Divisional to Application Number :NA
Filing Date :NA

(71)**Name of Applicant :**
1)THE PROCTER & GAMBLE COMPANY
Address of Applicant :One Procter & Gamble Plaza Cincinnati OH 45202 U.S.A.
(72)**Name of Inventor :**
1)MESKENS Stefan
2)JOHNSON Kerry Brian
3)BYRD JR. Leon
4)KHALAF Suzanne

(57) Abstract :
An in line method of rejecting composition filled pouches having a defect such as a leak comprises inspecting a first composition filled pouch. If a leak is detected that pouch is rejected from the manufacturing process. The pouch adjacent to the leak is also rejected.

No. of Pages : 17 No. of Claims : 8

(12) PATENT APPLICATION PUBLICATION
(19) INDIA
(22) Date of filing of Application :21/04/2014
(21) Application No.3177/DELNP/2014 A
(43) Publication Date : 22/05/2015

(54) Title of the invention : COMPOSITE MATERIAL VIA IN SITU POLYMERIZATION OF THERMOPLASTIC (METH) ACRYLIC RESINS AND ITS USE

(51) International classification :B29C70/06,B29C70/48,C08F265/06
(31) Priority Document No :1159553
(32) Priority Date :21/10/2011
(33) Name of priority country :France
(86) International Application No :PCT/EP2012/004381
Filing Date :19/10/2012
(87) International Publication No :WO 2013/056845
(61) Patent of Addition to Application Number :NA
Filing Date :NA
(62) Divisional to Application Number :NA
Filing Date :NA

(71)**Name of Applicant :**
1)ARKEMA FRANCE
Address of Applicant :420 Rue dEstienne dOrves F 92700 Colombes France
(72)**Name of Inventor :**
1)GERARD Pierre
2)GLOTIN Michel
3)HOCHSTETTER Gilles

(57) Abstract :
The present invention relates to a composite material obtained by in situ polymerization of a thermoplastic resin with a fibrous material. More particularly the present invention relates to a polymeric composite material obtained by in situ polymerization of a thermoplastic (meth) acrylic resin and a fibrous material containing long fibers and its use a process for making such a composite material and mmanufactured mechanical or structured part or article comprising this polymeric composite material.

No. of Pages : 30 No. of Claims : 27

(12) PATENT APPLICATION PUBLICATION
(19) INDIA
(22) Date of filing of Application :23/04/2014
(21) Application No.3249/DELNP/2014 A
(43) Publication Date : 22/05/2015

(54) Title of the invention : FUMIGANT COMPOSITIONS AND METHODS

(51) International classification :A01N25/20,A01N29/00,A01P17/00
(31) Priority Document No :61/554623
(32) Priority Date :02/11/2011
(33) Name of priority country :U.S.A.
(86) International Application No :PCT/US2012/062350
Filing Date :29/10/2012
(87) International Publication No :WO 2013/066781
(61) Patent of Addition to Application Number :NA
Filing Date :NA
(62) Divisional to Application Number :NA
Filing Date :NA

(71)**Name of Applicant :**
1)HONEYWELL INTERNATIONAL INC.
Address of Applicant :Patent Services M/S AB/2B 101 Columbia Road P. O. Box 2245 Morristown New Jersey 07962 2245 U.S.A.
(72)**Name of Inventor :**
1)POSS Andrew J.
2)SINGH Rajiv R.
3)NALEWAJEK David
4)CANTLON Cheryl L.

(57) Abstract :
Fumigant compositions including hexafluoropropene or 1 1 3 3 3 pentafluoropropene and methods of preparing such compositions are provided herein. The fumigant compositions may be suitable for use as soil fumigant compositions and structural fumigant compositions against a variety of undesirable species such as weeds nematodes pathogens animals and insects. The fumigant compositions also have low toxicity and low Global Warming Potential.

No. of Pages : 14 No. of Claims : 10

(12) PATENT APPLICATION PUBLICATION
(19) INDIA
(22) Date of filing of Application :02/01/2015
(21) Application No.37/DELNP/2015 A
(43) Publication Date : 22/05/2015

(54) Title of the invention : RUBBER COMPOSITION COMPRISING AN EPOXY RESIN AND A POLYIMINE HARDENER

(51) International classification :C08K5/29
(31) Priority Document No :1257196
(32) Priority Date :25/07/2012
(33) Name of priority country :France
(86) International Application No :PCT/EP2013/065634
Filing Date :24/07/2013
(87) International Publication No :WO 2014/016346
(61) Patent of Addition to Application Number :NA
Filing Date :NA
(62) Divisional to Application Number :NA
Filing Date :NA

(71)**Name of Applicant :**
1)COMPAGNIE GENERALE DES ETABLISSEMENTS MICHELIN
Address of Applicant :12 Cours Sablon F 63000 Clermont Ferrand France
2)MICHELIN RECHERCHE ET TECHNIQUE S.A.
(72)**Name of Inventor :**
1)VEYLAND Anne
2)MOUGIN Catherine

(57) Abstract :
The invention relates to a rubber composition containing at least one diene elastomer a reinforcing filler a cross linking system an epoxy resin at a concentration ranging from 1 to 20 phr and a polyimine hardener at a concentration ranging from 0.2 to 15 phr.

No. of Pages : 42 No. of Claims : 29

(12) PATENT APPLICATION PUBLICATION
(21) Application No.6596/DELNP/2014 A
(19) INDIA
(22) Date of filing of Application :05/08/2014
(43) Publication Date : 22/05/2015

(54) Title of the invention : PROCESS FOR PRODUCTION OF HEXAMETHYLENEDIAMINE FROM 5 HYDROXYMETHYLFURFURAL

(51) International classification :C07C211/12,C07C209/16,C07C29/17
(31) Priority Document No :61/588093
(32) Priority Date :18/01/2012
(33) Name of priority country :U.S.A.
(86) International Application No :PCT/US2013/021315
Filing Date :11/01/2013
(87) International Publication No :WO 2013/109477
(61) Patent of Addition to Application Number :NA
Filing Date :NA
(62) Divisional to Application Number :NA
Filing Date :NA

(71)**Name of Applicant :**
1)RENNOVIA INC.
Address of Applicant :1080 Hamilton Avenue Menlo Park CA 94025 U.S.A.
(72)**Name of Inventor :**
1)DIAS Eric L.
2)SHOEMAKER James A. W.
3)BOUSSIE Thomas R.
4)MURPHY Vincent J.

(57) Abstract :
Processes are disclosed for the conversion of a carbohydrate source to hexamethylenediamine (HMDA) and to intermediates useful for the production of hexamethylenediamine and other industrial chemicals. HMDA is produced by direct reduction of a furfural substrate to 1 6 hexanediol in the presence of hydrogen and a heterogeneous reduction catalyst comprising Pt or by indirect reduction of a furfural substrate to 1 6 hexanediol wherein 1 2 6 hexanetriol is produced by reduction of the furfural substrate in the presence of hydrogen and a catalyst comprising Pt and 1 2 6 hexanediol is then converted by hydro genation in the presence of a catalyst comprising Pt to 1 6 hexanediol each process then proceding to the production of HMDA by known routes such as amination of the 1 6 hexanediol. Catalysts useful for the direct and indirect production of 1 6 hexanediol are also disclosed.

No. of Pages : 28 No. of Claims : 48

(12) PATENT APPLICATION PUBLICATION
(21) Application No.6597/DELNP/2014 A
(19) INDIA
(22) Date of filing of Application :05/08/2014
(43) Publication Date : 22/05/2015

(54) Title of the invention : METAL DETECTOR FOR PRODUCTION AND PACKAGING LINES

(51) International classification :G01V3/10
(31) Priority Document No :12155954.6
(32) Priority Date :17/02/2012
(33) Name of priority country :EPO
(86) International Application No :PCT/EP2013/052754
Filing Date :12/02/2013
(87) International Publication No :WO 2013/120836
(61) Patent of Addition to Application Number :NA
Filing Date :NA
(62) Divisional to Application Number :NA
Filing Date :NA

(71)**Name of Applicant :**
1)METTLER TOLEDO SAFELINE LTD.
Address of Applicant :Montford Street Salford Manchester Greater Manchester M50 2XD U.K.
2)TNA AUSTRALIA PTY LIMITED
(72)**Name of Inventor :**
1)BUTTERWORTH Daren
2)TAYLOR Alfred Alexander
3)ALCHIN Darren Ken

(57) Abstract :
A metal detector (420) has a metallic enclosure (421) with an entrance aperture (430) and an exit aperture (431) whose cross sectional areas differ from each other. Arranged inside the enclosure (421) is a coil system with at least one transmitter coil (423) and at least one first and at least one second receiver coil (424 425). The entrance and exit apertures (430 431) and the coil system (423 424 425) enclose a detection zone (428) through which objects under inspection move along a travel path entering the metal detector (420) through the entrance aperture (430) and leaving the metal detector (420) through the exit aperture (431). The detection zone (428) is asymmetric and its cross sectional profile varies along the travel path from the entrance aperture (430) to the exit aperture (431) wherein the coils (423 424 425) differ in size from each other. The first and second receiver coils (424 425) are connected in series with each other but their windings are wired with the opposite sense of rotation relative to each other. The at least one transmitter coil (423) when energized by an alternating electric current generates a primary electromagnetic field which in turn induces a first voltage in the at least one first receiver coil (424) and a second voltage in the at least one second receiver coil (425). In spite of the asymmetry of the metal detector (420) the first and second voltages cancel each other when there is no metal present in the objects moving through the detection zone.

No. of Pages : 22 No. of Claims : 15

(12) PATENT APPLICATION PUBLICATION
(19) INDIA
(22) Date of filing of Application :29/04/2013
(21) Application No.3771/DELNP/2013 A
(43) Publication Date : 22/05/2015

(54) Title of the invention : AGE TAILORED NUTRITIONAL COMPOSITION WITH ANIMAL FATS AND VEGETABLE FATS

(51) International classification :A23L1/29,A23L1/30,A23L1/305
(31) Priority Document No :10191204.6
(32) Priority Date :15/11/2010
(33) Name of priority country :EPO
(86) International Application No :PCT/EP2011/068608
Filing Date :25/10/2011
(87) International Publication No :WO 2012/065810
(61) Patent of Addition to Application Number :NA
Filing Date :NA
(62) Divisional to Application Number :NA
Filing Date :NA

(71)**Name of Applicant :**
1)NESTEC S.A.
Address of Applicant :Avenue Nestl 55 CH 1800 Vevey Switzerland
(72)**Name of Inventor :**
1)KLASSEN Petra
2)MAGLIOLA Corinne

(57) Abstract :
The present invention relates to nutritional formulae which are specifically designed to address the needs of infants and young children of at least 2 years of age. In particular the invention provides a set of nutritional compositions for infants and young children each nutritional composition having an age specific fat composition. The set of the invention is specifically aimed at providing long term benefits to infants and young children by meeting the nutritional needs of the infants and young children at each specific age.

No. of Pages : 30 No. of Claims : 20

(12) PATENT APPLICATION PUBLICATION
(19) INDIA
(22) Date of filing of Application :13/01/2012
(21) Application No.414/DELNP/2012 A
(43) Publication Date : 22/05/2015

(54) Title of the invention : A RAINWATER TREATMENT UNIT

(51) International classification :B60T
(31) Priority Document No :S2009/0499
(32) Priority Date :29/06/2009
(33) Name of priority country :Ireland
(86) International Application No :PCT/EP2010/059229
Filing Date :29/06/2010
(87) International Publication No : NA
(61) Patent of Addition to Application Number :NA
Filing Date :NA
(62) Divisional to Application Number :NA
Filing Date :NA

(71)**Name of Applicant :**
1)OZONE INDUSTRIES IRELAND LIMITED
Address of Applicant :6 Abbeyvale Dromahair County Leitrim Ireland.
(72)**Name of Inventor :**
1)Owen Thomas LEONARD

(57) Abstract :
The present invention is directed to an assembly and a method of treating rainwater to produce potable water. A compact and easy-to-install apparatus is achievable as a result of a simple yet highly effective sanitisation method. Rainwater is entrained with a gas and the entrained rainwater is irradiated with an ultraviolet (UV) light to fully sanitise the rainwater. The UV light is used during the irradiation of the entrained water and is also used to form a gaseous bactericide which is used to entrain the rainwater. None of the disadvantages of the prior art systems apply to any rainwater treatment systems which use this method. All of the connections between the component parts may be already provided for in this rainwater treatment unit and consequently both installation and maintenance costs will be significantly reduced in comparison to the rainwater treatment systems which are known from the prior art.

No. of Pages : 25 No. of Claims : 22

(12) PATENT APPLICATION PUBLICATION
(21) Application No.5119/DELNP/2013 A
(19) INDIA
(22) Date of filing of Application :07/06/2013
(43) Publication Date : 22/05/2015

(54) Title of the invention : INSTANT DRINK POWDERS COMPRISING HYDROLYZED WHOLE GRAIN

(51) International classification :A23F3/14,A23F3/16,A23F5/24
(31) Priority Document No :10194212.6
(32) Priority Date :08/12/2010
(33) Name of priority country :EPO
(86) International Application No :PCT/EP2011/072076
Filing Date :07/12/2011
(87) International Publication No :WO 2012/076601
(61) Patent of Addition to Application Number :NA
Filing Date :NA
(62) Divisional to Application Number :NA
Filing Date :NA

(71)**Name of Applicant :**
1)NESTEC S.A.
Address of Applicant :Avenue Nestl 55 CH 1800 Vevey Switzerland
(72)**Name of Inventor :**
1)SCHAFFER LEQUART Christelle
2)ROGER Olivier Yves
3)WAVREILLE Anne Sophie
4)WEINGAND ZIADE Alexandra
5)MARJANOVIC Nicolas
6)TE BIESEBEKE Rob

(57) Abstract :
The present invention relates to instant drink powders comprising a primary ingredient of particles or agglomerated particles having a particle size below 500 µm a hydrolyzed whole grain composition an alpha amylase or fragments thereof which alpha amylase or fragments thereof show no hydrolytic activity towards dietary fibers when in the active state; and a moisture content of at most 5% (w/w) of the instant drink powder.

No. of Pages : 39 No. of Claims : 15

(12) PATENT APPLICATION PUBLICATION
(19) INDIA
(22) Date of filing of Application :06/08/2014
(21) Application No.6603/DELNP/2014 A
(43) Publication Date : 22/05/2015

(54) Title of the invention : METHODS AND COMPOSITION RELATED TO BROWN ADIPOSE LIKE CELLS

(51) International classification :C12N5/077
(31) Priority Document No :61/599080
(32) Priority Date :15/02/2012
(33) Name of priority country :U.S.A.
(86) International Application No :PCT/US2013/026170
Filing Date :14/02/2013
(87) International Publication No :WO 2013/123214
(61) Patent of Addition to Application Number :NA
Filing Date :NA
(62) Divisional to Application Number :NA
Filing Date :NA

(71)**Name of Applicant :**
1)DEPUY SYNTHES PRODUCTS LLC
Address of Applicant :325 Paramount Drive Raynham Massachusetts 02767 U.S.A.
(72)**Name of Inventor :**
1)SEYDA Agnieszka
2)COLTER David C.
3)BUENSUCESO Charito S.
4)KAZANECKI Christian C.
5)DHANARAJ Sridevi

(57) Abstract :
Methods and therapeutics are provided for treating diseases including metabolic diseases and other weight related disorders. Generally methods for making brown adipose like including culturing a population of artery derived cells in adipogenic induction medium for a period of time and under conditions sufficient to increase expression of at least one adipocyte marker at a higher level as compared to untreated artery derived cells are disclosed. Isolated artery derived ex vivo differentiated brown adipose like cells are also provided including pharmaceutical compositions and cell delivery systems thereof. In another embodiment a method of treating a subject is disclosed that includes obtaining a population of artery derived brown adipose like cells and administering the brown adipose like cells into a target region in the subject.

No. of Pages : 42 No. of Claims : 20

(12) PATENT APPLICATION PUBLICATION
(19) INDIA
(22) Date of filing of Application :06/08/2014
(21) Application No.6604/DELNP/2014 A
(43) Publication Date : 22/05/2015

(54) Title of the invention : FILTER HOUSING AND AIR FILTER UNIT FOR A COMBUSTION ENGINE

(51) International classification :F02M35/024,B01D46/00
(31) Priority Document No :12501920
(32) Priority Date :01/03/2012
(33) Name of priority country :Sweden
(86) International Application No :PCT/SE2013/050161
Filing Date :25/02/2013
(87) International Publication No :WO 2013/129997
(61) Patent of Addition to Application Number :NA
Filing Date :NA
(62) Divisional to Application Number :NA
Filing Date :NA

(71)**Name of Applicant :**
1)SCANIA CV AB
Address of Applicant :S 151 87 Sdertlje Sweden
(72)**Name of Inventor :**
1)PETTERSSON Emil
2)NYBERG Sven Erik

(57) Abstract :
The invention relates to a filter housing (10) for a filter unit (50) with a substantially semicylindrical air filter (52) comprising an air inlet (20) and an engine air outlet (40). According to the invention the filter housing (10) has a top aperture (12) for introducing and taking out the filter unit (50) a bottom aperture (16) arranged to be closed and opened by a closed filter bottom (70) of the filter unit (50) being introduced or taken out and a cover (30) to close the top aperture (12). The invention relates also to a filter unit for such a filter housing.

No. of Pages : 15 No. of Claims : 8

(12) PATENT APPLICATION PUBLICATION
(19) INDIA
(22) Date of filing of Application :05/08/2014
(21) Application No.6590/DELNP/2014 A
(43) Publication Date : 22/05/2015

(54) Title of the invention : MULTI MODE CONTROL SYSTEM FOR RECTANGULAR BALER AND RELATED METHOD

(51) International classification :A01F15/08
(31) Priority Document No :NA
(32) Priority Date :NA
(33) Name of priority country :NA
(86) International Application No :PCT/EP2012/053084
Filing Date :23/02/2012
(87) International Publication No :WO 2013/123990
(61) Patent of Addition to Application Number :NA
Filing Date :NA
(62) Divisional to Application Number :NA
Filing Date :NA

(71)**Name of Applicant :**
1)CNH INDUSTRIAL BELGIUM NV
Address of Applicant :Leon Claeysstraat 3A B 8210 Zedelgem Belgium
(72)**Name of Inventor :**
1)VERHAEGHE Didier O.M.
2)DUMAREY Robrecht

(57) Abstract :
The present invention provides a rectangular baler (10) having a bale forming chamber (16) a piston (62) that is reciprocatable in the bale forming chamber (16) for compressing biomass to form bales. The dimensions of part of the interior of the bale forming chamber (16) are adjustable under the influence of at least one actuator (18) the energization of which is controllable. A controller (58) for controlling the energization of the at least one actuator (18) is adapted for generating a least a first control signal (PWM1) in accordance with a target pressure mode of the baler a second control signal (PWM2) in accordance with a target force mode of the baler and a third control signal (PWM3) in accordance with a target weight mode of the baler. The controller (58) is furthermore adapted for determining a final control signal (PWMfinal) from at least the first control signal and a weight factor associated therewith the second control signal and a weight factor associated therewith and the third control signal and a weight factor associated therewith the final control signal being for use to control the energization of the at least one actuator of the rectangular baler. By making a combination of the first second and third control signals for generating the final control signal and attributing weights to the control signals control strategies can be mixed thereby offering numerous alternatives to deal with situations where state of the art choices of control systems fall short.

No. of Pages : 38 No. of Claims : 15

(12) PATENT APPLICATION PUBLICATION
(19) INDIA
(22) Date of filing of Application :05/08/2014
(21) Application No.6591/DELNP/2014 A
(43) Publication Date : 22/05/2015

(54) Title of the invention : CATHETER SECUREMENT DEVICES

(51) International classification :A61M25/02,A61F13/02
(31) Priority Document No :61/588515
(32) Priority Date :19/01/2012
(33) Name of priority country :U.S.A.
(86) International Application No :PCT/US2013/022070
Filing Date :18/01/2013
(87) International Publication No :WO 2013/109835
(61) Patent of Addition to Application Number :NA
Filing Date :NA
(62) Divisional to Application Number :NA
Filing Date :NA

(71)**Name of Applicant :**
1)INSIGHTRA MEDICAL INCORPORATED
Address of Applicant :9200 Irvine Center Drive Suite 200 Irvine CA 92618 U.S.A.
(72)**Name of Inventor :**
1)HYMAN Daniel
2)NODA Wayne A.
3)BELL Stephen G.

(57) Abstract :
Described herein are catheter securement devices that can be used to secure catheters catheter hubs and other medical devices to the body of a patient. The catheter securement devices can include an adhesive pad and engagement tabs with a slide locking feature. Adaptors can be used to provide suture tabs to catheters that lack suture tabs.

No. of Pages : 65 No. of Claims : 21

(12) PATENT APPLICATION PUBLICATION
(19) INDIA
(22) Date of filing of Application :05/08/2014
(21) Application No.6592/DELNP/2014 A
(43) Publication Date : 22/05/2015

(54) Title of the invention : CHO GMT RECOMBINANT PROTEIN EXPRESSION

(51) International classification :C12N5/10
(31) Priority Document No :2012004834
(32) Priority Date :20/01/2012
(33) Name of priority country :Singapore
(86) International Application No :PCT/SG2013/000023
Filing Date :18/01/2013
(87) International Publication No :WO 2013/109190
(61) Patent of Addition to Application Number :NA
Filing Date :NA
(62) Divisional to Application Number :NA
Filing Date :NA

(71)**Name of Applicant :**
1)AGENCY FOR SCIENCE TECHNOLOGY AND RESEARCH
Address of Applicant :1 Fusionpolis Way #20 10 Connexis Singapore 138632 Singapore 138632 Singapore
(72)**Name of Inventor :**
1)SONG Zhiwei

(57) Abstract :
The present invention provides modified cells for producing proteins with modified glycosylation patterns. Proteins produced in such cells and the use of such proteins in medicine and particularly in the treatment of cancer is also provided.

No. of Pages : 93 No. of Claims : 35

(12) PATENT APPLICATION PUBLICATION
(21) Application No.6594/DELNP/2014 A
(19) INDIA
(22) Date of filing of Application :05/08/2014
(43) Publication Date : 22/05/2015

(54) Title of the invention : METHOD AND ARRANGEMENT FOR UTILIZING RECIRCULATION FOR HIGH TEMPERATURE FUEL CELL SYSTEM

(51) International classification :H01M8/06,H01M8/04
(31) Priority Document No :20125147
(32) Priority Date :10/02/2012
(33) Name of priority country :Finland
(86) International Application No :PCT/FI2013/050118
Filing Date :05/02/2013
(87) International Publication No :WO 2013/117810
(61) Patent of Addition to Application Number :NA
Filing Date :NA
(62) Divisional to Application Number :NA
Filing Date :NA

(71)**Name of Applicant :**
1)CONVION OY
Address of Applicant :Tekniikantie 12 FI 02150 Espoo Finland
(72)**Name of Inventor :**
1)RUOKOM,,KI Jaakko

(57) Abstract :
The focus of the invention is an arrangement utilizing recirculation for high temperature fuel cell system each fuel cell in the fuel cell system comprising an anode side (100) a cathode side (102) and an electrolyte (104) between the anode side and the cathode side and the fuel cell system comprises means (109) for performing anode (100) side recirculation flow of reactants. The arrangement comprises means (120) for accomplishing recycle ratio 70 % or more for the recirculation flow means (122) for feeding to the recirculation a feed in flow which comprises substantially high oxygen content the feed in flow being 30 % or less of entire flow means (105) for performing heat exchanging to provide substantially low temperature conditions in the recirculation flow means (107) for performing catalytic partial oxidation in the recirculation flow to produce a substantially high amount of hydrogen for the recirculation flow in fuel cell system start up or shutdown situations and means (114) for exhausting 30 % or less of the entire flow from the anode side recirculation the means (105) and (120) being arranged to provide inlet temperature of 350 °C 500 °C to the means (107) while outlet temperature of said means (107) not exceeding 800 °C.

No. of Pages : 22 No. of Claims : 10

(12) PATENT APPLICATION PUBLICATION
(21) Application No.3351/DEL/2013 A
(19) INDIA
(22) Date of filing of Application :14/11/2013
(43) Publication Date : 22/05/2015

(54) Title of the invention : A PROCESS AND AN APPARATUS FOR CONTINUOUS SYNTHESIS OF FULLERENE ENCAPSUATED IN CARBON NANOTUBE STRUCTURES

(51) International classification :B82Y
(31) Priority Document No :NA
(32) Priority Date :NA
(33) Name of priority country :NA
(86) International Application No :NA
Filing Date :NA
(87) International Publication No : NA
(61) Patent of Addition to Application Number :NA
Filing Date :NA
(62) Divisional to Application Number :NA
Filing Date :NA

(71)**Name of Applicant :**
1)DIRECTOR GENERAL DEFENCE RESEARCH & DEVELOPMENT ORGANISATION
Address of Applicant :MINISTRY OF DEFENCE, GOVERNMENT OF INDIA ROOM NO. 348, B-WING, DRDO BHAWAN, RAJAJI MARG, NEW DELHI-110011, INDIA Delhi India
(72)**Name of Inventor :**
1)ROY, DEBMALYA
2)KUMAR, ABHAI
3)TIWARI, NEERU
4)IMAMUDDIN, MOHD.
5)MUKHOPADHYAY, KINGSUK
6)SAXENA, ARVIND, KUMAR

(57) Abstract :
The present invention provides a method for continuous synthesis of fullerene encapsulated in carbon nanotube structure and corresponding apparatus thereof. The apparatus for continuous synthesis of fullerene encapsulated in carbon nanotube 10 structure comprises an unique features of the multiple anodes on a rotating turret with the suitable external variable transverse magnetic field and an in situ heating arrangement for tailor make the bandgap and thermal conductivity of carbon nanotube by the incorporation of fullerene inside the carbon nanotube. The total time to complete one full cycle of the fullerene peapod structure is much less as compared to available 15 conventional methods.

No. of Pages : 31 No. of Claims : 15

(12) PATENT APPLICATION PUBLICATION
(19) INDIA
(22) Date of filing of Application :29/04/2014
(21) Application No.3421/DELNP/2014 A
(43) Publication Date : 22/05/2015

(54) Title of the invention : ODOR CONTROL SYSTEMS WITH CUSTOMIZABLE AROMA

(51) International classification :A01K29/00,A62B7/08,A61L9/00
(31) Priority Document No :61/628650
(32) Priority Date :03/11/2011
(33) Name of priority country :U.S.A.
(86) International Application No :PCT/US2012/058962
Filing Date :05/10/2012
(87) International Publication No :WO 2013/066563
(61) Patent of Addition to Application Number :NA
Filing Date :NA
(62) Divisional to Application Number :NA
Filing Date :NA

(71)**Name of Applicant :**
1)NESTEC S.A.
Address of Applicant :Avenue Nestle 55 CH 1800 Vevey Switzerland
(72)**Name of Inventor :**
1)HUCK Nathan Foster
2)DONAVON Mark Alan

(57) Abstract :
The invention provides odor control systems having customizable aroma and malodor control compounds. In a general aspect, the odor control system includes a litter box and a programmable dissemination device attachable to the litter box. The programmable dissemination device is adaptable to receive at least one odor control cartridge and disseminate the contents of the cartridge. The odor control cartridge is a fragrance cartridge or a malodor counteractant cartridge insertable into the programmable dissemination device. Alternatively, the odor control cartridge can include a fragrance and a malodor counteractant in the same cartridge.

No. of Pages : 21 No. of Claims : 44

(12) PATENT APPLICATION PUBLICATION
(19) INDIA
(22) Date of filing of Application :29/04/2014
(21) Application No.3422/DELNP/2014 A
(43) Publication Date : 22/05/2015

(54) Title of the invention : FLOW WRAP PACKAGING

(51) International classification :B65D75/58,B65D75/62
(31) Priority Document No :11187803.9
(32) Priority Date :04/11/2011
(33) Name of priority country :EPO
(86) International Application No :PCT/EP2012/070606
Filing Date :18/10/2012
(87) International Publication No :WO 2013/064375
(61) Patent of Addition to Application Number :NA
Filing Date :NA
(62) Divisional to Application Number :NA
Filing Date :NA

(71)**Name of Applicant :**
1)NESTEC S.A.
Address of Applicant :Av. Nestl 55 CH 1800 Vevey Switzerland
(72)**Name of Inventor :**
1)LABROUSSE MOLLA Sophie Marie
2)ROTA Mikael
3)LEBRAND Pierre Henri

(57) Abstract :
The invention is directed to a sealed packaging (1, 100, 110) for food products (P), such as confectionery products like candy bars or ice cream bars, preferably having a substantially cuboid form and comprising a flow wrap (2), wherein the flow wrap (2) is closed by end seals (3, 4) at two opposed ends (5, 6) and a fin seal (7) extending in a longitudinal direction of the packaging (1, 100, 110) between the two end seals (3, 4), wherein the fin seal (7) is provided at a lateral side (8) of the packaging (1, 100, 110), wherein an opening aid (9) is provided in the fin seal (7), and wherein the opening aid (9) extends into a tear-line (11) which diagonally traverses at least one of a front and rear wall (F, R) of the packaging (1, 100, 110).

No. of Pages : 38 No. of Claims : 15

(12) PATENT APPLICATION PUBLICATION
(19) INDIA
(22) Date of filing of Application :02/01/2015
(21) Application No.42/DELNP/2015 A
(43) Publication Date : 22/05/2015

(54) Title of the invention : METHODS OF TREATING OVERWEIGHT AND OBESITY

(51) International classification :A61K31/24,A61K31/335,A61K31/22
(31) Priority Document No :61/656451
(32) Priority Date :06/06/2012
(33) Name of priority country :U.S.A.
(86) International Application No :PCT/US2013/044368
Filing Date :05/06/2013
(87) International Publication No :WO 2013/184837
(61) Patent of Addition to Application Number :NA
Filing Date :NA
(62) Divisional to Application Number :NA
Filing Date :NA

(71)**Name of Applicant :**
1)OREXIGEN THERAPEUTICS INC.
Address of Applicant :3344 Torrey Pines Court La Jolla CA 92037 U.S.A.
(72)**Name of Inventor :**
1)KLASSEN Preston
2)TAYLOR Kristin

(57) Abstract :
The present disclosure relates to compositions kits uses systems and methods for treating overweight and obesity using naltrexone plus bupropion preferably in combination with a comprehensive web based and/or telephone based weight management program and preferably in subjects at increased risk of adverse cardiovascular outcomes.

No. of Pages : 47 No. of Claims : 35

(12) PATENT APPLICATION PUBLICATION
(21) Application No.6614/DELNP/2014 A
(19) INDIA
(22) Date of filing of Application :06/08/2014
(43) Publication Date : 22/05/2015

(54) Title of the invention : TALC CONTAINING POLYPROPYLENE COMPOSITION WITH EXCELLENT THERMOMECHANICAL PROPERTIES

(51) International classification :C08K3/34,C08K13/08,C08L23/10
(31) Priority Document No :12000652.3
(32) Priority Date :01/02/2012
(33) Name of priority country :EPO
(86) International Application No :PCT/EP2013/000114
Filing Date :16/01/2013
(87) International Publication No :WO 2013/113470
(61) Patent of Addition to Application Number :NA
Filing Date :NA
(62) Divisional to Application Number :NA
Filing Date :NA

(71)**Name of Applicant :**
1)BOREALIS AG
Address of Applicant :IZD Tower Wagramerstrasse 17 19 A 1220 Wien Austria
(72)**Name of Inventor :**
1)KONA Rao Balakantha
2)SCHIESSER Stefan
3)HAUER Andreas
4)PRAMER Hansjrg

(57) Abstract :
The invention pertains to a polypropylene composition consisting of: 55 to 79 wt% base polymer mix; 18 to 44.5 wt% talc; and 0.5 to 3 wt% additives based on the total weight of the polypropylene composition the base polymer mix containing a XCU fraction and a XCS fraction and the XCU fraction being present in an amount of 91 to 98 wt% and the XCS fraction being present in an amount of 2 to 9 wt%; the base polymer mix containing a comonomer content of less than 5 wt% with respect to the base polymer mix; the talc having a d50 median particle size of 1.0 to 3.0 µm when measured according to ISO 13317 3 15 using a Sedigraph; and the composition having a MFR (230 °C/2.16 kg; ISO 1133) of 1 to 10 g/10 min. a process for the production of such a polypropylene composition and article comprising said polypropylene composition.

No. of Pages : 36 No. of Claims : 17

(12) PATENT APPLICATION PUBLICATION
(19) INDIA
(22) Date of filing of Application :14/07/2014
(21) Application No.5853/DELNP/2014 A
(43) Publication Date : 22/05/2015

(54) Title of the invention : TURBOMACHINE ROTOR BLADE AND CORRESPONDING TURBOMACHINE

(51) International classification :F01D5/22,F01D5/28
(31) Priority Document No :1250435
(32) Priority Date :17/01/2012
(33) Name of priority country :France
(86) International Application No :PCT/FR2013/050096
Filing Date :16/01/2013
(87) International Publication No :WO 2013/107982
(61) Patent of Addition to Application Number :NA
Filing Date :NA
(62) Divisional to Application Number :NA
Filing Date :NA

(71)**Name of Applicant :**
1)SNECMA
Address of Applicant :2 boulevard du Gnral Martial Valin F 75015 Paris France
(72)**Name of Inventor :**
1)BENSALAH Slim
2)NEGRI Arnaud
3)DIGARD BROU DE CUISSART Sbastien
4)KLEIN Guillaume
5)TANG Ba Phuc
6)MATHIEU David
7)DOREMUS Sibylle

(57) Abstract :
Turbomachine rotor blade having at its distal end (310B) a shroud (314) this shroud (314) comprising: a platform (320) delimiting the exterior surface of the flow path for the gases passing through the turbomachine and having opposing first (351) and second lateral edges; and upstream and downstream rubbing seals (331 332) extending from said platform (320) outwards. Each seal extends between two lateral faces (331L 332L) situated respectively at the first (351) and second lateral edges. The lateral faces (331L 332L) of the upstream or downstream seal (331 332) are covered at least in part with a wear resistant material (360).

No. of Pages : 34 No. of Claims : 14

(12) PATENT APPLICATION PUBLICATION
(19) INDIA
(22) Date of filing of Application :14/07/2014
(21) Application No.5854/DELNP/2014 A
(43) Publication Date : 22/05/2015

(54) Title of the invention : COMPOUNDS FOR TREATING PARVOVIRUS INFECTION

(51) International classification :A61K31/13,A61P31/12,A61P31/20
(31) Priority Document No :1203180.3
(32) Priority Date :24/02/2012
(33) Name of priority country :U.K.
(86) International Application No :PCT/EP2013/053526
Filing Date :22/02/2013
(87) International Publication No :WO 2013/124403
(61) Patent of Addition to Application Number :NA
Filing Date :NA
(62) Divisional to Application Number :NA
Filing Date :NA

(71)**Name of Applicant :**
1)ARATANA THERAPEUTICS NV
Address of Applicant :Ambachtenlaan 1 B 3001 Heverlee Belgium
(72)**Name of Inventor :**
1)GORIS Nesya
2)NEYTS Johan
3)BLOMSMA Erwin
4)WERA Stefaan
5)VILLERS Jr´me
6)BILLIET Aino
7)AUWERX Joeri
8)DEBEURME Veerle
9)KISS Eleonora
10)SWINNEN Chlo«

(57) Abstract :
The present invention relates to compounds for use in a method for the treatment or prevention of parvovirus infections in humans and warm blooded animals including feline panleukopenia virus (FPV) infections in felids canine parvovirus type 2 (CPV 2) infections in canines minute virus of mice (MVM) infections in mice and B19 parvovirus infections in humans.

No. of Pages : 32 No. of Claims : 15

(12) PATENT APPLICATION PUBLICATION
(19) INDIA
(22) Date of filing of Application :14/07/2014
(21) Application No.5857/DELNP/2014 A
(43) Publication Date : 22/05/2015

(54) Title of the invention : HERMETIC OCCLUSION SURGICAL CLAMP FOR THE CERVIX IN CASES OF PLACENTA PRAEVIA

(51) International classification :A61B17/44,A61B17/42
(31) Priority Document No :MX/a/2011/013931
(32) Priority Date :16/12/2011
(33) Name of priority country :Mexico
(86) International Application No :PCT/MX2012/000121
Filing Date :27/11/2012
(87) International Publication No :WO 2013/089545
(61) Patent of Addition to Application Number :NA
Filing Date :NA
(62) Divisional to Application Number :NA
Filing Date :NA

(71)**Name of Applicant :**
1)GUZMAN SANCHEZ Arnoldo
Address of Applicant :Pablo Neruda No. 2520 Col. Providencia C.P. 44620 Guadalajara Jalisco Mexico
2)RODRIGUEZ DE ANDA Eduardo
(72)**Name of Inventor :**
1)GUZMAN SANCHEZ Arnoldo
2)RODRIGUEZ DE ANDA Eduardo

(57) Abstract :
The present application comprises a hermetic occlusion surgical clamp for the cervix for use in cases of placenta praevia which comprises: compressive jaws with a spring (5.1); and semi conical sections (5.2) at the ends of each jaw with a bored out semi cylinder (5.3); and a traction cylinder with machining that gives rise to two arms (6.2) which each have a bore and are connected to a bolt (5.4) which connects the jaws to the traction cylinder. The traction cylinder also comprises a thread (604) which allows the screwing on of a nut (6.5) whereby the jaws can be opened or closed. Lastly the surgical clamp also comprises a cover which is a hollow cylinder along the entire longitudinal axis thereof which covers from the semi conical sections (5.2) of the jaws but leaves a length of thread (6.4) free which allows the placing of the nut (6.5).

No. of Pages : 12 No. of Claims : 11

(12) PATENT APPLICATION PUBLICATION
(21) Application No.608/DELNP/2012 A
(19) INDIA
(22) Date of filing of Application :20/01/2012
(43) Publication Date : 22/05/2015

(54) Title of the invention : A DEODORIZED EDIBLE OIL OR FAT WITH LOW LEVELS OF BOUND MCPD AND PROCESS OF MAKING BY CARBOXYMETHYL CELLULOSE AND/OR RESIN PURIFICATION

(51) International classification :C11B 3/00
(31) Priority Document No :09166004.3
(32) Priority Date :21/07/2009
(33) Name of priority country :EPO
(86) International Application No :PCT/EP2010/060448
Filing Date :19/07/2010
(87) International Publication No :WO 2011/009841
(61) Patent of Addition to Application Number :NA
Filing Date :NA
(62) Divisional to Application Number :NA
Filing Date :NA

(71)**Name of Applicant :**
1)NESTEC S.A.
Address of Applicant :AVENUE NESTLE 55, CH-1800 VEVEY, SWITZERLAND
(72)**Name of Inventor :**
1)BERTOLI, CONSTANTIN
2)CAUVILLE, FRANCOIS
3)SCHOONMAN, ANNEMARIE, JOHANNA HENDRIKA

(57) Abstract :
A process for making a deodorized edible oil or fat having a low level of bound MCPD (monochloro propanediol esters) and/or low level of bound 3-MCPD is described. The process comprises a step of contacting the oil or fat to a carboxymethyl cellulose or an ion exchange resin. The carboxymethyl cellulose can be a Blanose® cellulose gum and the resin can be a cationic resin. A deodorized vegetable oil or fat and a food product made there from is described. The food product can be an infant formula. It exhibits low levels of bound MCPD and/or low level of bound 3-MCPD. In one embodiment the oil or fat has a reduced level of free fatty acid as well as a limpid aspect and no off-flavors.

No. of Pages : 31 No. of Claims : 25

(12) PATENT APPLICATION PUBLICATION
(19) INDIA
(22) Date of filing of Application :06/08/2014
(21) Application No.6630/DELNP/2014 A
(43) Publication Date : 22/05/2015

(54) Title of the invention : AIR CAVITY AND AIR LUBRICATION SYSTEM SHIP HAVING STERN SHAPE OF STEPPED FORM AROUND THE PROPELLER

(51) International classification :B63B1/38,B63B1/08,B63H5/16
(31) Priority Document No :1020100010225
(32) Priority Date :01/02/2012
(33) Name of priority country :Republic of Korea
(86) International Application No :PCT/KR2013/000785
Filing Date :31/01/2013
(87) International Publication No :WO 2013/115577
(61) Patent of Addition to Application Number :NA
Filing Date :NA
(62) Divisional to Application Number :NA
Filing Date :NA

(71)**Name of Applicant :**
1)KIM Sung Yun
Address of Applicant :Haeun Village 502 Daeyun 1 dong Namgu Busan 608 811 Republic of Korea
2)PARK Keunsil
(72)**Name of Inventor :**
1)KIM Sung Yun
2)PARK Keunsil

(57) Abstract :
The present invention relates to an air cavity and air lubrication system ship having a stern shape of stepped form around the propeller and the ship comprises: ship bottom dams and stern dams (stern steps) which are attached and secured at predetermined intervals in the width direction of the hull on the ship s bottom apart from the bow and on the stern and which extend in the length direction of the hull so as to form a plurality of air cavities; a plurality of air supply tubes which are installed perpendicularly on the ship so as to supply air to the air cavities and which have aperture adjusting valves while also being equipped with air supply machinery for supplying compressed air; slots of which a plurality are formed at predetermined intervals in the length direction of the ship bottom dams and which are formed in the ship bottom dams in such a way as to not only allow air communication between air cavities but also to supply some air to the ship s sides; and steps which are provided to the rear of the rudder while constituting the discharge end of the stern dam (stern step) so as to block the inflow of discharged air towards the propeller by inducing a continuous vacuum by causing speed differences in the wake of the propeller. According to the present invention because of the stern shape of stepped form it is possible to obtain the advantage of reduced carbon dioxide production because the air and the air bubbles that flow in from the front of the propeller are blocked and unable to flow in towards the propeller and at the same time are discharged smoothly to the rear of the propeller because of the use of the vacuum which is to say the suction force generated at the steps due to the high speed wake of the propeller and thus the reversing efficiency is improved and the air lubrication reduces the surface area of friction between the hull and the water and minimises frictional resistance.

No. of Pages : 17 No. of Claims : 5

(12) PATENT APPLICATION PUBLICATION
(19) INDIA
(22) Date of filing of Application :02/01/2015
(21) Application No.50/DELNP/2015 A
(43) Publication Date : 22/05/2015

(54) Title of the invention : APPARATUS AND METHOD FOR PROVIDING UNINTERRUPTIBLE POWER

(51) International classification :H02J9/00
(31) Priority Document No :NA
(32) Priority Date :NA
(33) Name of priority country :NA
(86) International Application No :PCT/US2012/042048
Filing Date :12/06/2012
(87) International Publication No :WO 2013/187883
(61) Patent of Addition to Application Number :NA
Filing Date :NA
(62) Divisional to Application Number :NA
Filing Date :NA

(71)**Name of Applicant :**
1)SCHNEIDER ELECTRIC IT CORPORATION
Address of Applicant :132 Fairgrounds Road West Kingston RI 02892 U.S.A.
(72)**Name of Inventor :**
1)NIELSEN Henning Roar

(57) Abstract :
Systems and methods of controlling an uninterruptible power supply are provided. The uninterruptible power supply includes an input configured to receive input power an output a power conversion circuit coupled with the input and the output and a controller coupled with the power conversion circuit. The power conversion circuit includes an inverter which includes a low pass filter. The low pass filter includes an inductor and the controller is configured to provide control signals to the inverter such that a first current measured at the inductor generates a second current measured at the output where the first current has a first polarity and the second current having a second polarity and the first polarity is either zero or the same polarity as the second polarity.

No. of Pages : 36 No. of Claims : 19

(12) PATENT APPLICATION PUBLICATION
(19) INDIA
(22) Date of filing of Application :06/08/2014
(21) Application No.6610/DELNP/2014 A
(43) Publication Date : 22/05/2015

(54) Title of the invention : IMPROVED POULTRY FARM PRACTICES

(51) International classification :A61L101/52,C12N1/20,C12R1/125
(31) Priority Document No :2012900312
(32) Priority Date :27/01/2012
(33) Name of priority country :Australia
(86) International Application No :PCT/AU2013/000060
Filing Date :25/01/2013
(87) International Publication No :WO 2013/110133
(61) Patent of Addition to Application Number :NA
Filing Date :NA
(62) Divisional to Application Number :NA
Filing Date :NA

(71)**Name of Applicant :**
1)GFS CORPORATION AUS PTY LTD.
Address of Applicant :41 Magnesium Street Narangba Queensland 4504 Australia
(72)**Name of Inventor :**
1)BRALKOWSKI Michael Paul
2)BROOKS Sarah Ashley
3)HINTON Stephen M.
4)WRIGHT David Matthew
5)YANG Shih Hsin

(57) Abstract :
The present invention relates to methods of improving the environment within a poultry farming facility including reducing ammonia production in a poultry facility inhibiting urease enzymes in poultry litter reducing levels of pathogenic bacteria in poultry litter improving productivity of poultry farms reducing or preventing pododermatitis in poultry reared in mass production poultry facilities and controlling pests in poultry litter. Compositions suitable for use in such methods comprising at least one microorganism of the genus Bacillus and at least one biosurfactant wherein the biosurfactant is present in an amount of 2 mg/L to 7000 mg/L are also described.

No. of Pages : 40 No. of Claims : 26

(12) PATENT APPLICATION PUBLICATION
(19) INDIA
(22) Date of filing of Application :06/08/2014
(21) Application No.6611/DELNP/2014 A
(43) Publication Date : 22/05/2015

(54) Title of the invention : WASTEWATER TREATMENT PLANT

(51) International classification :B01D21/00,C02F1/00
(31) Priority Document No :BO2012A000046
(32) Priority Date :02/02/2012
(33) Name of priority country :Italy
(86) International Application No :PCT/IB2013/050891
Filing Date :02/02/2013
(87) International Publication No :WO 2013/114340
(61) Patent of Addition to Application Number :NA
Filing Date :NA
(62) Divisional to Application Number :NA
Filing Date :NA

(71)**Name of Applicant :**
1)WAMGROUP S.P.A.
Address of Applicant :Strada degli Schiocchi 12 Modena Italy
(72)**Name of Inventor :**
1)MARCHESINI Vainer

(57) Abstract :
A wastewater treatment plant (10). The plant (10) comprises separating equipment (100) for separating the solid particles from the liquid part. The separating equipment (100) comprises in turn an inlet opening (101D) and an outlet opening (101E) which are substantially arranged in line along a common directrix (X). In the fluid mass (MF) there is present at least one fluid dynamic profile (70 75) which is suited to help the detachment of the solid particles from the liquid part. The plant is characterised in that the separating equipment (100) comprises furthermore a second fluid dynamic profile (75). The two fluid dynamic profiles (70 75) define between one another a first preferential flow channel (77) of the liquid mass.

No. of Pages : 14 No. of Claims : 10

(12) PATENT APPLICATION PUBLICATION
(19) INDIA
(22) Date of filing of Application :06/08/2014
(21) Application No.6612/DELNP/2014 A
(43) Publication Date : 22/05/2015

(54) Title of the invention : IMPROVED CORROSION RESISTANCE WHEN USING CHELATING AGENTS IN CARBON STEEL CONTAINING EQUIPMENT

(51) International classification :C23F11/04,C23F11/14,C23G1/08
(31) Priority Document No :61/597950
(32) Priority Date :13/02/2012
(33) Name of priority country :U.S.A.
(86) International Application No :PCT/EP2013/052687
Filing Date :11/02/2013
(87) International Publication No :WO 2013/120806
(61) Patent of Addition to Application Number :NA
Filing Date :NA
(62) Divisional to Application Number :NA
Filing Date :NA

(71)**Name of Applicant :**
1)AKZO NOBEL CHEMICALS INTERNATIONAL B.V.
Address of Applicant :Stationsstraat 77 NL 3811 MH Amersfoort Netherlands
(72)**Name of Inventor :**
1)DE WOLF Cornelia Adriana
2)BOUWMAN Albertus Jacobus Maria
3)NASR EL DIN Hisham

(57) Abstract :
The present invention relates to the use of solutions containing glutamic acid N N diacetic acid or a salt thereof (GLDA) and/or methylglycine N N diacetic acid or a salt thereof (MGDA) in treating subterranean formations wherein the solutions contact carbon steel containing equipment and to a system containing a carbon steel containing material in contact with a solution containing glutamic acid N N diacetic acid or a salt thereof (GLDA) and/or methylglycine N N diacetic acid or a salt thereof (MGDA) at elevated temperatures and/or employing carbon steel types as usually found in subterranean formations.

No. of Pages : 26 No. of Claims : 18

(12) PATENT APPLICATION PUBLICATION
(19) INDIA
(22) Date of filing of Application :06/08/2014
(21) Application No.6613/DELNP/2014 A
(43) Publication Date : 22/05/2015

(54) Title of the invention : METHOD AND ARRANGEMENT FOR TRANSFERRING ELECTRICALLY CONDUCTIVE MATERIAL IN FLUID FORM ON A SUBSTRATE TO BE PRINTED

(51) International classification :H05K3/10,H05K3/12,H05K3/14
(31) Priority Document No :20125088
(32) Priority Date :30/01/2012
(33) Name of priority country :Finland
(86) International Application No :PCT/FI2013/050098
Filing Date :30/01/2013
(87) International Publication No:WO 2013/113994
(61) Patent of Addition to Application Number :NA
Filing Date :NA
(62) Divisional to Application Number :NA
Filing Date :NA

(71)**Name of Applicant :**
1)STORA ENSO OYJ
Address of Applicant :P.O. Box 309 FI 00101 Helsinki Finland
(72)**Name of Inventor :**
1)MAIJALA Juha
2)SIRVI– Petri

(57) Abstract :
A method and an arrangement are disclosed for transferring electrically conductive material in fluid form onto a substrate. Said substrate is preheated to a first temperature and of said electrically conductive material there is produced fluid electrically conductive material. The fluid electrically conductive material is sprayed onto the preheated substrate to form a pattern of predetermined kind. The substrate onto which said fluid electrically conductive material was sprayed is cooled to a third temperature which is lower than the melting point of said electrically conductive material.

No. of Pages : 26 No. of Claims : 17

(12) PATENT APPLICATION PUBLICATION
(19) INDIA
(22) Date of filing of Application :06/08/2014
(21) Application No.6615/DELNP/2014 A
(43) Publication Date : 22/05/2015

(54) Title of the invention : DIRECTION ACTIVE PROJECTION

(51) International classification :G08G1/095
(31) Priority Document No :61/595261
(32) Priority Date :06/02/2012
(33) Name of priority country :U.S.A.
(86) International Application No :PCT/US2013/024967
Filing Date :06/02/2013
(87) International Publication No :WO 2013/119692
(61) Patent of Addition to Application Number :NA
Filing Date :NA
(62) Divisional to Application Number :NA
Filing Date :NA

(71)**Name of Applicant :**
1)AVERY DENNISON CORPORATION
Address of Applicant :150 N. Orange Grove Blvd. Pasadena CA 91103 U.S.A.
(72)**Name of Inventor :**
1)CHAPMAN Steven R.
2)WU Feng

(57) Abstract :
A directionally active projection device is described that includes a planar display providing a pattern of information. The planar display includes regions of light transparency and regions for blocking light transmittance. The directionally active projection device also includes a lens arranged adjacent to the planar display and a collection of light sources arranged as an array in a focal plane of the lens. Also described are methods of controlling directionally active projection devices.

No. of Pages : 19 No. of Claims : 32

(12) PATENT APPLICATION PUBLICATION
(19) INDIA
(22) Date of filing of Application :06/08/2014
(21) Application No.6616/DELNP/2014 A
(43) Publication Date : 22/05/2015

(54) Title of the invention : CONTROL SYSTEM FOR MULTIFUEL INTERNAL COMBUSTION ENGINE

(51) International classification :F02D19/06
(31) Priority Document No :NA
(32) Priority Date :NA
(33) Name of priority country :NA
(86) International Application No :PCT/JP2012/052983
Filing Date :09/02/2012
(87) International Publication No :WO 2013/118276
(61) Patent of Addition to Application Number :NA
Filing Date :NA
(62) Divisional to Application Number :NA
Filing Date :NA

(71)**Name of Applicant :**
1)TOYOTA JIDOSHA KABUSHIKI KAISHA
Address of Applicant :1 Toyota cho Toyota shi Aichi 4718571 Japan
(72)**Name of Inventor :**
1)MASUBUCHI Masahiko
2)TANIGUCHI Satoshi
3)SUGIYAMA Kouseki
4)ETO Hiroshi

(57) Abstract :
The present invention addresses the problem of controlling deviation between the generated torque and the requested torque of an engine in a control system for a multifuel internal combustion engine capable of using CNG and liquid fuel. To solve this problem in a control system for a multifuel internal combustion engine wherein the internal combustion engine is operated in a first operating mode that uses only CNG when the requested torque of the internal combustion engine is equal to or less than a threshold value and the internal combustion engine is operated in a second operating mode that uses at least the liquid fuel of the CNG and the liquid fuel when the requested torque is greater than the threshold value the present invention changes the threshold value in accordance with the concentration of inert gas contained in the CNG.

No. of Pages : 108 No. of Claims : 7

(12) PATENT APPLICATION PUBLICATION
(19) INDIA
(22) Date of filing of Application :06/08/2014
(21) Application No.6617/DELNP/2014 A
(43) Publication Date : 22/05/2015

(54) Title of the invention : ORALLY ADMINISTRABLE COMPOSITIONS COMPRISING CALCIUM

(51) International classification :A61K9/22,A61K9/26,A61K33/06
(31) Priority Document No :61/798689
(32) Priority Date :15/03/2013
(33) Name of priority country :U.S.A.
(86) International Application No :PCT/US2014/029941
Filing Date :15/03/2014
(87) International Publication No :WO 2014/145219
(61) Patent of Addition to Application Number :NA
Filing Date :NA
(62) Divisional to Application Number :NA
Filing Date :NA

(71)**Name of Applicant :**
1)CEROLIFE LLC
Address of Applicant :612 Corporate Way Suite #10 Valley Cottage New York 10989 U.S.A.
(72)**Name of Inventor :**
1)SHAH Manish S.
2)DIFALCO Ray J.

(57) Abstract :
Orally administrable compositions comprising calcium methods of administration and methods of making the same.

No. of Pages : 24 No. of Claims : 21

(12) PATENT APPLICATION PUBLICATION
(21) Application No.6618/DELNP/2014 A
(19) INDIA
(22) Date of filing of Application :06/08/2014
(43) Publication Date : 22/05/2015

(54) Title of the invention : CONTROL DEVICE AND CONTROL METHOD FOR DISTRIBUTED POWER GENERATION DEVICE

(51) International classification	:H02J3/00
(31) Priority Document No	:NA
(32) Priority Date	:NA
(33) Name of priority country	:NA
(86) International Application No	:PCT/JP2012/052920
Filing Date	:09/02/2012
(87) International Publication No	:WO 2013/118266
(61) Patent of Addition to Application Number	:NA
Filing Date	:NA
(62) Divisional to Application Number	:NA
Filing Date	:NA

(71)**Name of Applicant :**
1)HITACHI LTD.
Address of Applicant :6 6 Marunouchi 1 chome Chiyoda ku Tokyo 1008280 Japan
(72)**Name of Inventor :**
1)SAWA Toshiyuki
2)MORI Shigeki
3)TSURUGAI Mitsuo

(57) Abstract :
The present invention addresses the problem of estimating a constrained amount of electric power when the amount of power generated on the consumer side is constrained. In the present invention control pattern information for controlling power generation on the consumer side is configured such that a first time band in which power generation is constrained and a second time band in which power generation is not constrained appear continuously alternating with each other. A power generation amount estimator estimates a potential amount of power that would have been generated if power generation by a distributed power generation device were not constrained in the first time band on the basis of a first amount of power generated in the first time band and a second amount of power generated in the second time band. The power generation amount estimator may also calculate as the constrained amount of electric power the difference between the potential amount of power generated and a first upper limit value for constraining the first amount of power generated.

No. of Pages : 78 No. of Claims : 13

(12) PATENT APPLICATION PUBLICATION
(21) Application No.6619/DELNP/2014 A
(19) INDIA
(22) Date of filing of Application :06/08/2014
(43) Publication Date : 22/05/2015

(54) Title of the invention : DRIVE UNIT FOR AIRCRAFT LANDING GEAR WITH INTEGRATED COOLING

(51) International classification :B64C25/40
(31) Priority Document No :NA
(32) Priority Date :NA
(33) Name of priority country :NA
(86) International Application No :PCT/EP2012/053106
Filing Date :23/02/2012
(87) International Publication No :WO 2013/123993
(61) Patent of Addition to Application Number :NA
Filing Date :NA
(62) Divisional to Application Number :NA
Filing Date :NA

(71)**Name of Applicant :**
1)L 3 COMMUNICATIONS MAGNET MOTOR GMBH
Address of Applicant :Petersbrunner Str. 2 82319 Starnberg Germany
(72)**Name of Inventor :**
1)MUELLER Anton
2)OSWALD Johann

(57) Abstract :
A drive unit (40) for an aircraft ground wheel (2) associated with a brake unit (30) for braking the ground wheel (12) is disclosed the drive unit (40) comprising a driving motor (42) being drivingly coupleable to the ground wheel (12); and a cooling system including at least a drive cooling unit (52) being configured to generate a drive cooling air stream (54) for cooling the drive unit (40) and a brake cooling unit (62 70; 72 74) configured to generate a brake cooling air stream (64) by sucking in air from the brake unit (30). Further disclosed is a method of controlling such drive unit (40) in which the cooling system is driven by the driving motor (42) of the drive unit (40) the method comprising decoupling the driving motor (42) from the ground wheel (12) and increasing the rotational speed of the driving motor (42) to increase the amount of generated drive cooling air (54) when an operating condition of the ground wheel (12) and/or of the drive unit (40) is switched from a propulsion mode to a non propulsion mode.

No. of Pages : 33 No. of Claims : 18

(12) PATENT APPLICATION PUBLICATION
(19) INDIA
(22) Date of filing of Application :14/07/2014
(21) Application No.5861/DELNP/2014 A
(43) Publication Date : 22/05/2015

(54) Title of the invention : PESTICIDAL MIXTURES INCLUDING SPIROHETEROCYCLIC PYRROLIDINE DIONES

(51) International classification :A01N43/90,A01N43/78
(31) Priority Document No :12151401.2
(32) Priority Date :17/01/2012
(33) Name of priority country :EPO
(86) International Application No :PCT/EP2013/050790
Filing Date :17/01/2013
(87) International Publication No :WO 2013/107793
(61) Patent of Addition to Application Number :NA
Filing Date :NA
(62) Divisional to Application Number :NA
Filing Date :NA

(71)**Name of Applicant :**
1)SYNGENTA PARTICIPATIONS AG
Address of Applicant :Schwarzwaldallee 215 CH 4058 Basel Switzerland
(72)**Name of Inventor :**
1)BUCHHOLZ Anke
2)HATT Fabienne
3)RINDLISBACHER Alfred
4)MUEHLEBACH Michel

(57) Abstract :
A pesticidal mixture comprising as active ingredient a mixture of component A and component B wherein component A is a compound of formula (I) in which Q is i or ii wherein X Y and Z m and n A G and R are as defined as in claim 1 and component B is a compound selected from the insecticides as defined in claim 1. The present invention also relates to methods of using said mixtures for the control of plant pests.

No. of Pages : 59 No. of Claims : 17

(12) PATENT APPLICATION PUBLICATION
(21) Application No.6626/DELNP/2014 A
(19) INDIA
(22) Date of filing of Application :06/08/2014
(43) Publication Date : 22/05/2015

(54) Title of the invention : SINTERED BEARING FOR MOTOR TYPE FUEL PUMP WITH OUTSTANDING CORROSION RESISTANCE WEAR RESISTANCE AND CONFORMABILITY

(51) International classification :C22C9/06,B22F5/00,C22C1/08
(31) Priority Document No :2012111481
(32) Priority Date :15/05/2012
(33) Name of priority country :Japan
(86) International Application No :PCT/JP2013/063375
Filing Date :14/05/2013
(87) International Publication No :WO 2013/172326
(61) Patent of Addition to Application Number :NA
Filing Date :NA
(62) Divisional to Application Number :NA
Filing Date :NA

(71)**Name of Applicant :**
1)DIAMET CORPORATION
Address of Applicant :1 1 Koganecho 3 chome Higashi ku Niigata shi Niigata 9508640 Japan
(72)**Name of Inventor :**
1)TAKEZOE Shinichi
2)ISHII Yoshinari

(57) Abstract :
The purpose of the present invention is to provide a bearing for a motor type fuel pump that has corrosion resistance against poor quality gasoline that includes sulfur or organic acids that because of resistance to wear and outstanding conformability with a coupled shaft can be used favorably even in compact fuel pumps and that is made of a novel Zn P Ni Sn C Cu based sintered alloy. The bearing is characterized by having a structure in which contained are by weight 3 13% Zn 0.1 0.9% P 10 21% Ni 3 12% Sn and 1 8% C with the remainder consisting of Cu and unavoidable impurities in which an Sn alloy phase that comprises at least 15% Sn by weight is formed on grain boundaries of a base comprising a solid solution phase of a Zn Ni Sn Cu alloy and in which the porosity is 8 18% and free graphite is distributed in the pores.

No. of Pages : 23 No. of Claims : 2

(12) PATENT APPLICATION PUBLICATION
(21) Application No.6627/DELNP/2014 A
(19) INDIA
(22) Date of filing of Application :06/08/2014
(43) Publication Date : 22/05/2015

(54) Title of the invention : MEDIUM STORAGE AND FEEDING DEVICE AND MEDIUM TRANSACTION DEVICE

(51) International classification :B65H29/51,G07D9/00
(31) Priority Document No :2012067209
(32) Priority Date :23/03/2012
(33) Name of priority country :Japan
(86) International Application No :PCT/JP2012/082568
Filing Date :14/12/2012
(87) International Publication No :WO 2013/140686
(61) Patent of Addition to Application Number :NA
Filing Date :NA
(62) Divisional to Application Number :NA
Filing Date :NA

(71)**Name of Applicant :**
1)OKI ELECTRIC INDUSTRY CO. LTD.
Address of Applicant :1 7 12 Toranomon Minato ku Tokyo 1058460 Japan
(72)**Name of Inventor :**
1)IWASAKI Satoru

(57) Abstract :
In a temporary retention unit (15) a banknote is rolled onto the outer peripheral surface of a cylindrical rotatably supported drum (31) whereby the banknote is held between the opposing section (64) and the outer peripheral surface. More specifically in the temporary retention unit (15) the supplied banknote is pressed against and rolled onto the outer peripheral surface of the drum (31) in accompaniment with the rotation of the drum (31) by the lower tape (36) and the upper tape (33) rolled by one end thereof onto the drum (31). The temporary retention unit (15) is configured so that the other end of the movable part (40) that presses the banknote against the outer peripheral surface of the drum (31) while moving relative to the drum (31) is positioned further away from the drum (31) than the opposing section (64).

No. of Pages : 35 No. of Claims : 8

(12) PATENT APPLICATION PUBLICATION
(21) Application No.6628/DELNP/2014 A
(19) INDIA
(22) Date of filing of Application :06/08/2014
(43) Publication Date : 22/05/2015

(54) Title of the invention : A NETWORK COMMUNICATION REDUNDANCY METHOD

(51) International classification :H04L1/22
(31) Priority Document No :12500252
(32) Priority Date :17/01/2012
(33) Name of priority country :Sweden
(86) International Application No :PCT/EP2013/050735
Filing Date :16/01/2013
(87) International Publication No :WO 2013/107767
(61) Patent of Addition to Application Number :NA
Filing Date :NA
(62) Divisional to Application Number :NA
Filing Date :NA

(71)**Name of Applicant :**
1)NET INSIGHT INTELLECTUAL PROPERTY AB
Address of Applicant :P.O. Box 42093 S 126 14 Stockholm Sweden
(72)**Name of Inventor :**
1)RANGNE Gran
2)KARLSSON Martin

(57) Abstract :
There is provided an improved redundancy method for a communication network. The method for node to node communication comprises the steps of providing each packet of a data stream (11) to be transferred with a respective identifier then transporting over at least two links (A B) replicated data of the data stream from a transmitting node (N0) to a receiving node (N1) and at the receiving node receiving and buffering packets from the at least two links for subsequent forwarding of the data stream. The identifier corresponds to a relative position of a packet in the data stream and the step of buffering comprises reconstructing using received packets from at least one of the at least two links a predetermined portion of the data stream in a common indexed buffer. The invention is based on the insight that a hitless failover can be performed by at the receiving node using a single common indexed play out buffer in which a selective reconstruction of the transported data stream utilizing individual pieces i.e. frames or packages of a data stream received over multiple links is performed.

No. of Pages : 29 No. of Claims : 14

(12) PATENT APPLICATION PUBLICATION
(19) INDIA
(22) Date of filing of Application :02/01/2015
(21) Application No.40/DELNP/2015 A
(43) Publication Date : 22/05/2015

(54) Title of the invention : ELECTRICAL SUPPLY INTO WIND TURBINE HUB

(51) International classification :F03D1/06,F03D11/00
(31) Priority Document No :PA 2012 70390
(32) Priority Date :02/07/2012
(33) Name of priority country :Denmark
(86) International Application No :PCT/DK2013/050204
Filing Date :20/06/2013
(87) International Publication No :WO 2014/005588
(61) Patent of Addition to Application Number :NA
Filing Date :NA
(62) Divisional to Application Number :NA
Filing Date :NA

(71)**Name of Applicant :**
1)VESTAS WIND SYSTEMS A/S
Address of Applicant :Hedeager 44 DK 8200 Aarhus N Denmark
(72)**Name of Inventor :**
1)BAUN Torben Friis
2)NEUBAUER Jesper Lykkegaard

(57) Abstract :
The invention provides a wind turbine comprising a nacelle a rotor comprising at least one blade attached to a hub and an electrical supply structure for supplying electrical power from the nacelle to the rotor. The rotor is rotatably connected to the nacelle about an axis of rotation. The supply structure comprises a switch which has a connected mode in which the nacelle and the rotor are electrically connected and a disconnected mode in which the nacelle and the rotor are electrically disconnected. Furthermore the switch is adapted to change from the disconnected mode to the connected mode when the rotor does not rotate.

No. of Pages : 17 No. of Claims : 17

(12) PATENT APPLICATION PUBLICATION
(19) INDIA
(22) Date of filing of Application :14/07/2014
(21) Application No.5848/DELNP/2014 A
(43) Publication Date : 22/05/2015

(54) Title of the invention : PHARMACEUTICAL COMPOSITION COMPRISING A POLYMERIC CARRIER CARGO COMPLEX AND AT LEAST ONE PROTEIN OR PEPIDE ANTIGEN

(51) International classification :A61K47/48,A61K39/39,A61P35/00
(31) Priority Document No :PCT/EP2012/000420
(32) Priority Date :31/01/2012
(33) Name of priority country :EPO
(86) International Application No :PCT/EP2013/000291
Filing Date :31/01/2013
(87) International Publication No :WO 2013/113501
(61) Patent of Addition to Application Number :NA
Filing Date :NA
(62) Divisional to Application Number :NA
Filing Date :NA

(71)**Name of Applicant :**
1)CUREVAC GMBH
Address of Applicant :Paul Ehrlich Str. 15 72076 T¼bingen Germany
(72)**Name of Inventor :**
1)BAUMHOF Patrick
2)KRAMPS Thomas
3)VOSS Shnke
4)KALLEN Karl Josef
5)FOTIN MLECZEK Mariola

(57) Abstract :
The present invention is directed to a pharmaceutical composition including (e.g. for use as an adjuvant) a polymeric carrier cargo complex comprising as a carrier a polymeric carrier formed by disulfide crosslinked cationic components; and as a cargo at least one nucleic acid molecule and at least one antigen that is selected from an antigen from a pathogen associated with infectious disease; an antigen associated with allergy or allergic disease; an antigen associated with autoimmune disease; or an antigen associated with a cancer or tumour disease or in each case a fragment variant and/or derivative of said antigen. The pharmaceutical composition allows for efficient induction of an adaptive immune response directed against said antigen. The present invention furthermore provides kits as well as the use of the pharmaceutical composition or the kit as a vaccine particularly in the treatment of infectious diseases allergies autoimmune diseases and tumour or cancer diseases.

No. of Pages : 295 No. of Claims : 22

(12) PATENT APPLICATION PUBLICATION
(19) INDIA
(22) Date of filing of Application :14/07/2014
(21) Application No.5849/DELNP/2014 A
(43) Publication Date : 22/05/2015

(54) Title of the invention : COMPOSITION FROM LOBSTER HEMOCYTE EXTRACT FOR DETECTION OF LIPOPOLYSACCHARIDES PEPTIDOGLYCANS AND 1 3 BETA D GLUCANS

(51) International classification :C12Q1/04,C12Q1/26,C12Q1/37
(31) Priority Document No :CU/P/2011/0243
(32) Priority Date :27/12/2011
(33) Name of priority country :Cuba
(86) International Application No:PCT/CU2012/000009
Filing Date :27/12/2012
(87) International Publication No :WO 2013/113296
(61) Patent of Addition to Application Number :NA
Filing Date :NA
(62) Divisional to Application Number :NA
Filing Date :NA

(71)**Name of Applicant :**
1)CENTRO DE INVESTIGACION Y DESARROLLO DE LOS MEDICAMENTOS(CIDEM)
Address of Applicant :Avenida 26 No.1605 e/ Boyeros y Puentes Grandes Nuevo Vedado Plaza La Habana 10400 Cuba
2)CENTRO DE INVESTIGACIONES MARINAS
(72)**Name of Inventor :**
1)PERDOMO MORALES Rolando
2)MONTERO ALEJO Vivian
3)PERERA BRAVET Erick
4)CALERO CARBONELL Jorge Ernesto
5)PARDO RUIZ Zenia
6)PORTO VERDECIA Marlene
7)VEGA HURTADO Yamile

(57) Abstract :
The present invention relates to the field of pharmaceuticals chemistry and biotechnology and in particular to a method for preparing a composition for detecting and measuring the concentration of endotoxins or lipopolysaccharides peptidoglycans and (1 3) D glucans using a lobster hemocyte extract as starting material to the modifications of the composition for increasing the sensitivity thereof and to the methods for measuring endotoxins peptidoglycans and (1 3) D glucans using said composition.

No. of Pages : 21 No. of Claims : 16

(12) PATENT APPLICATION PUBLICATION
(19) INDIA
(22) Date of filing of Application :07/08/2014
(21) Application No.6647/DELNP/2014 A
(43) Publication Date : 22/05/2015

(54) Title of the invention : EXHAUST GAS PURIFICATION CATALYST

(51) International classification :B01J23/46,B01D53/94,B01J23/00
(31) Priority Document No :2012063774
(32) Priority Date :21/03/2012
(33) Name of priority country :Japan
(86) International Application No :PCT/IB2013/000339
Filing Date :27/02/2013
(87) International Publication No :WO 2013/140216
(61) Patent of Addition to Application Number :NA
Filing Date :NA
(62) Divisional to Application Number :NA
Filing Date :NA

(71)**Name of Applicant :**
1)TOYOTA JIDOSHA KABUSHIKI KAISHA
Address of Applicant :1 Toyota cho Toyota shi Aichi ken 471 8571 Japan
(72)**Name of Inventor :**
1)SAITO Yoshinori
2)AOKI Yuki
3)TANABE Toshitaka
4)HATANAKA Miho
5)TAKAHASHI Naoki
6)MORIKAWA Akira

(57) Abstract :
An exhaust gas purification catalyst includes a composite oxide support and a precious metal catalyst supported on the composite oxide support. The composite oxide support includes alumina zirconia ceria a first additive element oxide and a second additive element oxide. The first additive element oxide contains an additive element selected from the group consisting of rare earth elements excluding cerium and alkali earth elements. The second additive element oxide contains an additive element selected from the group consisting of rare earth elements excluding cerium and alkali earth elements. In the composite oxide support alumina is contained in a range of 30 to 40% by mass and zirconia is contained in a range of 36 to 46% by mass.

No. of Pages : 22 No. of Claims : 8

(12) PATENT APPLICATION PUBLICATION
(19) INDIA
(22) Date of filing of Application :06/08/2014
(21) Application No.6631/DELNP/2014 A
(43) Publication Date : 22/05/2015

(54) Title of the invention : METHOD AND APPARATUS FOR PROCUREMENT AGGREGATION

(51) International classification :G06Q10/00
(31) Priority Document No :13/372324
(32) Priority Date :13/02/2012
(33) Name of priority country :U.S.A.
(86) International Application No :PCT/US2013/025422
Filing Date :08/02/2013
(87) International Publication No :WO 2013/122837
(61) Patent of Addition to Application Number :NA
Filing Date :NA
(62) Divisional to Application Number :NA
Filing Date :NA

(71)**Name of Applicant :**
1)FEDELE Joseph
Address of Applicant :58 Knolls Drive North New Hyde Park NY 11040 U.S.A.
(72)**Name of Inventor :**
1)FEDELE Joseph

(57) Abstract :
A method computer program and single enterprise resource planning (ERP) system for procuring a product or service. The single ERP system includes an input for receiving information relating to product demand for a plurality of end users via a cooperative buying group a predictive engine for accumulating the received product demand into a single demand schedule and an output for transmitting the single demand schedule to a manufacturer/original source of the product. An optimization engine is provided for receiving product availability information from the manufacturer/original source of the product by the cooperative buying group and for determining one or more options for ordering the products. A procurement system is also included for providing the product availability information to the one or more options for ordering the products for receiving one or more product orders for ordering product from the manufacturer/original source of the product and for managing shipping the product.

No. of Pages : 78 No. of Claims : 44

(12) PATENT APPLICATION PUBLICATION
(19) INDIA
(22) Date of filing of Application :06/08/2014
(21) Application No.6632/DELNP/2014 A
(43) Publication Date : 22/05/2015

(54) Title of the invention : AUTHENTICITY VERIFYING SYSTEM FOR VERIFYING PRODUCT AUTHENTICITY THROUGH VERIFICATION OF PRODUCT SERIAL NUMBER EQUIPPED WITH LOCK DEVICE AND WHICH IS CAPABLE OF GENERATING NEW DATABASE AND UPDATING UNLOCK NUMBER UPON OCCURRENCE OF INFORMATION LEAK AND METHOD FOR PRODUCT AUTHENTICITY THROUGH ACQUIRING UNLOCK NUMBER

(51) International classification :G06Q10/08
(31) Priority Document No :1020120008430
(32) Priority Date :27/01/2012
(33) Name of priority country :Republic of Korea
(86) International Application No :PCT/KR2013/000495
Filing Date :22/01/2013
(87) International Publication No :WO 2013/111958
(61) Patent of Addition to Application Number :NA
Filing Date :NA
(62) Divisional to Application Number :NA
Filing Date :NA

(71)**Name of Applicant :**
1)CHUNG Hae Tahk
Address of Applicant :Kukdong Apt. 106 207 Hongeun dong 454 Seodaemoon gu Seoul 120 100 Republic of Korea
(72)**Name of Inventor :**
1)CHUNG Hae Tahk

(57) Abstract :
The present invention provides an authenticity verifying system capable of generating a new database and updating an unlock number upon occurrence of information leak the system comprising a product (1) having a lock device (11) with an infrared ray transceiving unit (12) and a keypad (14) and a scratch card (13) with a password and a product serial number written thereon; a manufacturer server (2) for verifying product authenticity (1) through a commercial communication network; and an unlock number change device (3) for downloading the password matched to the product (1) and a newly generated unlock number newly matched to the product serial number from the server (2) upon leak of information stored in the server (2). Further the present invention provides a method for verifying product authenticity through acquiring an unlock number the method being capable of verifying product authenticity (1) by applying the unlock number acquired through an unlock number acquiring process to the lock device (11) of the product (1) to unlock the lock device (11).

No. of Pages : 18 No. of Claims : 8

(12) PATENT APPLICATION PUBLICATION
(19) INDIA
(22) Date of filing of Application :06/08/2014
(21) Application No.6633/DELNP/2014 A
(43) Publication Date : 22/05/2015

(54) Title of the invention : MECHANICAL WASHING AND MEASURING DEVICE FOR PERFORMING ANALYSES

(51) International classification :G01N21/01,G01N33/52,G01N33/53
(31) Priority Document No :20120036
(32) Priority Date :03/02/2012
(33) Name of priority country :Finland
(86) International Application No :PCT/FI2013/000006
Filing Date :01/02/2013
(87) International Publication No :WO 2013/113983
(61) Patent of Addition to Application Number :NA
Filing Date :NA
(62) Divisional to Application Number :NA
Filing Date :NA

(71)**Name of Applicant :**
1)KORPELA Timo Kalevi
Address of Applicant :Kraatarinkatu 1 D 42 FI 20610 Turku Finland
(72)**Name of Inventor :**
1)KORPELA Timo Kalevi

(57) Abstract :
The invention describes simple and reliable cartridge constructions for carrying out analytical procedures in a closed system especially for carrying out bioaffinity analyses. The cartridge exploits a measuring component or a test strip (1 in Fig 1) and its cover (2 in Fig 1) as well as the motion between these two components to achieve liquid flow and events which are necessary for the analysis.

No. of Pages : 16 No. of Claims : 10

(12) PATENT APPLICATION PUBLICATION
(21) Application No.6634/DELNP/2014 A
(19) INDIA
(22) Date of filing of Application :06/08/2014
(43) Publication Date : 22/05/2015

(54) Title of the invention : SIDE LIFT SPREADER

(51) International classification :B66C1/10,B66F9/18
(31) Priority Document No :12156155.9
(32) Priority Date :20/02/2012
(33) Name of priority country :EPO
(86) International Application No :PCT/EP2013/053275
Filing Date :19/02/2013
(87) International Publication No :WO 2013/124271
(61) Patent of Addition to Application Number :NA
Filing Date :NA
(62) Divisional to Application Number :NA
Filing Date :NA

(71)**Name of Applicant :**
1)ELME SPREADER AB
Address of Applicant :Stlgatan 6 S 343 22 „lmhult Sweden
(72)**Name of Inventor :**
1)KARLSSON Gsta

(57) Abstract :
A side lift spreader (1) for handling empty containers (6) and a method for adjusting a main frame (10) of an inverted side lift spreader. The inverted side lift spreader (1) comprises a main carriage (8) which is connectable to a lifting device (2) to be movable along a front side (39) of a mast (4) of the lifting device (2) the main frame (10) being carried by and sideways movable with respect to the main carriage (8) and main frame guiding means (27) for guiding a movement of the main frame (10) with respect to the main carriage (8). The main frame guiding means (27) comprises at least two links (30 31 32 33) one first portion (52 56 60 64) of each link (30 31 32 33) being connected to the main frame (10) and one second portion (54 58 62 66) of each link (30 31 32 33) being connected to the main carriage (8). The second portions (54 58 62 66) of the links (30 31 32 33) are arranged at the main carriage (8) at respective points of attachment (76 78 80 82) which are located in use of the spreader (1) at an opposite side (84) of the mast (4) compared to the front side (39).

No. of Pages : 35 No. of Claims : 13

(12) PATENT APPLICATION PUBLICATION
(21) Application No.5711/DELNP/2013 A
(19) INDIA
(22) Date of filing of Application :25/06/2013
(43) Publication Date : 22/05/2015

(54) Title of the invention : USE OF ENCAPSULATED OIL IN DOUGH PREPARATION

(51) International classification :A23D7/005,A23D7/04,A21D2/16
(31) Priority Document No :10197247.9
(32) Priority Date :29/12/2010
(33) Name of priority country :EPO
(86) International Application No :PCT/EP2011/073952
Filing Date :23/12/2011
(87) International Publication No :WO 2012/089666
(61) Patent of Addition to Application Number :NA
Filing Date :NA
(62) Divisional to Application Number :NA
Filing Date :NA

(71)**Name of Applicant :**
1)NESTEC S.A.
Address of Applicant :Av. Nestl 55 CH 1800 Vevey Switzerland
(72)**Name of Inventor :**
1)ARFSTEN Judith
2)BETZ Reinhold
3)MEZZENGA Raffaele
4)ULRICH Stephane
5)SAVIN Gabriela
6)VALLES PAMIES Baltasar

(57) Abstract :
The use of encapsulated oil for the preparation of a dough. The encapsulated oil comprises an inner core of oil encapsulated in an outer shell of cross linked protein wherein the encapsulated oil comprises at least 80 % by weight oil. The dough is formed by mixing 0.5 to 40 % of the encapsulated oil with other ingredients.

No. of Pages : 19 No. of Claims : 17

(12) PATENT APPLICATION PUBLICATION
(21) Application No.6620/DELNP/2014 A
(19) INDIA
(22) Date of filing of Application :06/08/2014
(43) Publication Date : 22/05/2015

(54) Title of the invention : METHODS FOR MAKING MILK LIKE BEVERAGES

(51) International classification :A23L1/19
(31) Priority Document No :61/599595
(32) Priority Date :16/02/2012
(33) Name of priority country :U.S.A.
(86) International Application No :PCT/US2012/041474
Filing Date :08/06/2012
(87) International Publication No :WO 2013/122616
(61) Patent of Addition to Application Number :NA
Filing Date :NA
(62) Divisional to Application Number :NA
Filing Date :NA

(71)**Name of Applicant :**
1)NESTEC S.A.
Address of Applicant :Avenue Nestle 55 CH 1800 Vevey Switzerland
(72)**Name of Inventor :**
1)SHE Manjuan Jenny

(57) Abstract :
The invention provides methods for making a milk like beverage compositions comprising creating a homogeneous aqueous mixture of (1) one or more caseinates in amounts sufficient to produce a final composition containing from about 1 to about 10% caseinates (2) whey protein in amounts sufficient to produce a final composition containing from about 1 to about 10% whey protein (3) one or more fats in amounts sufficient to produce a final composition containing from about 2 to about 10% of one or more fats (4) one or more hydrocolloids in amounts sufficient to produce a final composition containing from about 0.01 to about 1 % of one or more hydrocolloids and (5) one or more emulsifiers in amounts sufficient to produce a final composition containing from about 0.1 to about 10% of one or more emulsifiers.

No. of Pages : 19 No. of Claims : 20

(12) PATENT APPLICATION PUBLICATION
(19) INDIA
(22) Date of filing of Application :06/08/2014
(21) Application No.6621/DELNP/2014 A
(43) Publication Date : 22/05/2015

(54) Title of the invention : ACCESS TRANSFER FOR A DRVCC MOBILE TERMINAL

(51) International classification :H04L29/06,H04W36/00
(31) Priority Document No :61/646966
(32) Priority Date :15/05/2012
(33) Name of priority country :U.S.A.
(86) International Application No :PCT/EP2013/057705
Filing Date :12/04/2013
(87) International Publication No :WO 2013/171011
(61) Patent of Addition to Application Number :NA
Filing Date :NA
(62) Divisional to Application Number :NA
Filing Date :NA

(71)**Name of Applicant :**
1)TELEFONAKTIEBOLAGET L M ERICSSON (PUBL)
Address of Applicant :SE 164 83 Stockholm Sweden
(72)**Name of Inventor :**
1)HALLENST…L Magnus
2)HOLM Jan
3)LINDHOLM Fredrik

(57) Abstract :
A method of Dual Radio Access Transfer of an IP Multimedia session IMS in an alerting phase for the Packet Switched to Circuit Switched direction. The method comprises initiating an IMS media session towards a terminating mobile station UE and during a session alerting phase making a determination at the UE that a DRVCC transfer is required from a Packet Switched PS to a Circuit Switched CS access. The method comprises sending a SIP message from the UE to a Service Centralization and Continuity Application Server SCC AS over the PS access informing the SCC AS of the DRVCC transfer and responding to receipt of the SIP message at the SCC AS by sending a SIP INVITE from the SCC AS towards a Mobile Switching Centre MSC serving the UE in the CS access the INVITE including an identity of the UE as a called party identity and the STN as the calling party identity. The method further comprises responding to receipt of said INVITE at the MSC or to receipt of associated CS signalling by sending from the MSC to the UE a CS Setup message whereupon the MSC is placed in a state in which it expects a CS Answer from the UE.

No. of Pages : 23 No. of Claims : 7

(12) PATENT APPLICATION PUBLICATION
(19) INDIA
(22) Date of filing of Application :06/08/2014
(21) Application No.6622/DELNP/2014 A
(43) Publication Date : 22/05/2015

(54) Title of the invention : DUAL ROTOR ASSEMBLY FOR TRANSMITTING FORCE TO A SHAFT

(51) International classification :F16D55/02,F16D66/02,F16D13/38
(31) Priority Document No :13/370834
(32) Priority Date :10/02/2012
(33) Name of priority country :U.S.A.
(86) International Application No :PCT/US2013/025173
Filing Date :07/02/2013
(87) International Publication No :WO 2013/119831
(61) Patent of Addition to Application Number :NA
Filing Date :NA
(62) Divisional to Application Number :NA
Filing Date :NA

(71)**Name of Applicant :**
1)EATON CORPORATION
Address of Applicant :1000 Eaton Boulevard Cleveland OH 44122 U.S.A.
(72)**Name of Inventor :**
1)ACHREKAR Nilesh Arun

(57) Abstract :
A dual rotor force transmitting assembly (10) includes a powerhead assembly (28) having a spring housing (36) a plurality of first spring sets (42a) that generate a braking force for a first rotor (14a) and a plurality of second spring sets (42b) that generate a braking force for a second rotor (14b). Using separate spring sets for each rotor ensures application of uniform and equal pressure on both rotors even if there is uneven friction surface wear.

No. of Pages : 23 No. of Claims : 20

(12) PATENT APPLICATION PUBLICATION
(19) INDIA
(22) Date of filing of Application :06/08/2014
(21) Application No.6623/DELNP/2014 A
(43) Publication Date : 22/05/2015

(54) Title of the invention : VACUUM INSULATION PANEL QUALITY CONTROL SYSTEMS AND METHODS FOR USING SAME

(51) International classification :G01M3/16
(31) Priority Document No :61/594819
(32) Priority Date :03/02/2012
(33) Name of priority country :U.S.A.
(86) International Application No :PCT/US2013/024641
Filing Date :04/02/2013
(87) International Publication No :WO 2013/116843
(61) Patent of Addition to Application Number :NA
Filing Date :NA
(62) Divisional to Application Number :NA
Filing Date :NA

(71)**Name of Applicant :**
1)CARALON GLOBAL LIMITED
Address of Applicant :Bletchley Park Science and Innovation Center Bletchley Park Milton Keynes MK3 6EB U.K.
(72)**Name of Inventor :**
1)WOJCIECHOWSKI Timothy
2)HEWITT Charles

(57) Abstract :
A system and method for implementing quality control for a panel is described. For example the panel may be configured as a vacuum insulation panel having sensors arranged within the panel and/or on a surface thereof. A radio frequency identification unit may be in operable communication with the sensor and may transmit panel information to an external radio frequency identification receiver. A data collation element in operable communication with the radio frequency identification receiver may be configured to receive and analyze aggregated panel performance data received from the radio frequency identification receiver.

No. of Pages : 18 No. of Claims : 20

(12) PATENT APPLICATION PUBLICATION
(21) Application No.3137/DELNP/2014 A
(19) INDIA
(22) Date of filing of Application :21/04/2014
(43) Publication Date : 22/05/2015

(54) Title of the invention : IMPREGNATION MANDREL COMPRISING A CLAMPING SYSTEM FOR THE PRODUCTION OF GAS TURBINE CASINGS FROM COMPOSITE MATERIAL

(51) International classification :B29C70/32,B29C70/54,B29C53/56
(31) Priority Document No :61/551539
(32) Priority Date :26/10/2011
(33) Name of priority country :U.S.A.
(86) International Application No :PCT/FR2012/052366
Filing Date :17/10/2012
(87) International Publication No :WO 2013/060965
(61) Patent of Addition to Application Number :NA
Filing Date :NA
(62) Divisional to Application Number :NA
Filing Date :NA

(71)**Name of Applicant :**
1)SNECMA
Address of Applicant :2 Boulevard du Gnral Martial Valin F 75015 Paris France
(72)**Name of Inventor :**
1)MATHON Richard
2)PATRIGEON Olivier

(57) Abstract :
The invention relates to an impregnation mandrel (100) for the production of gas turbine casings made from composite material said mandrel comprising: an annular wall (102) in which the profile of the outer surface corresponds to that of the internal surface of the casing to be produced; two side plates (104) the profiles of which correspond to those of external casing flanges to be produced; and a removable device (106) for clamping a layer having a fibrous texture which is wound around the mandrel.

No. of Pages : 19 No. of Claims : 8

(12) PATENT APPLICATION PUBLICATION
(21) Application No.44/DELNP/2015 A
(19) INDIA
(22) Date of filing of Application :02/01/2015
(43) Publication Date : 22/05/2015

(54) Title of the invention : SAMPLE DEPENDENT SELECTION OF PARAMETERS FOR USE IN ELECTROKINETIC TREATMENT OF THE SAMPLE

(51) International classification :G01N27/02
(31) Priority Document No :61/741312
(32) Priority Date :16/07/2012
(33) Name of priority country :U.S.A.
(86) International Application No :PCT/US2013/049619
Filing Date :08/07/2013
(87) International Publication No :WO 2014/014696
(61) Patent of Addition to Application Number :NA
Filing Date :NA
(62) Divisional to Application Number :NA
Filing Date :NA

(71)**Name of Applicant :**
1)GENEFLUIDICS INC.
Address of Applicant :845 Meridian Street Irwindale CA 91010 U.S.A.
(72)**Name of Inventor :**
1)GAU Jen jr

(57) Abstract :
Performing an electrokinetic treatment on different samples includes identifying an electrical signal that is appropriate for use in the treatment of each sample. The identification of the electrical signals results in different electrical signals being identified for different samples. The electrokinetic treatment of a sample results in that sample being exposed to the electrical signal identified for that sample. Accordingly different samples are exposed to different electrical signals. An electrokinetic treatment employs one or more electrokinetic phenomena to cause movement of one or more agents within the sample relative to the sample. In some instances the method also includes using each of the electrokinetically treated samples to generate an electrochemical sample and then performing an electrochemical analysis on each of the electrochemical samples.

No. of Pages : 30 No. of Claims : 21

(12) PATENT APPLICATION PUBLICATION
(19) INDIA
(22) Date of filing of Application :23/06/2014
(21) Application No.5125/DELNP/2014 A
(43) Publication Date : 22/05/2015

(54) Title of the invention : NOODLE CRUSHING AND DISPENSING SYSTEM

(51) International classification :G07F11/04,G07F11/24,G07F11/66
(31) Priority Document No :201109641.9
(32) Priority Date :23/12/2011
(33) Name of priority country :Singapore
(86) International Application No :PCT/EP2012/075272
Filing Date :12/12/2012
(87) International Publication No :WO 2013/092352
(61) Patent of Addition to Application Number :NA
Filing Date :NA
(62) Divisional to Application Number :NA
Filing Date :NA

(71)**Name of Applicant :**
1)NESTEC S.A.
Address of Applicant :Av. Nestl 55 CH 1800 Vevey Switzerland
(72)**Name of Inventor :**
1)SEE THO Tommy
2)SOH Hock Seng Gordon

(57) Abstract :
The invention relates to a system for breaking up dried noodle cakes into noodle pieces and dispensing the noodle pieces where the dried noodle cake is broken up to a degree selected by the operator. The system is configured for dispensing the noodle pieces into a receptacle.

No. of Pages : 27 No. of Claims : 13

(12) PATENT APPLICATION PUBLICATION
(19) INDIA
(22) Date of filing of Application :06/08/2014
(21) Application No.6637/DELNP/2014 A
(43) Publication Date : 22/05/2015

(54) Title of the invention : METHOD FOR STABILIZING LIGNIN FIBER FOR FURTHER CONVERSION TO CARBON FIBER

(51) International classification :D01D10/02,C08H7/00,D01F9/17
(31) Priority Document No :12500419
(32) Priority Date :23/01/2012
(33) Name of priority country :Sweden
(86) International Application No :PCT/SE2013/050039
Filing Date :21/01/2013
(87) International Publication No :WO 2013/112100
(61) Patent of Addition to Application Number :NA
Filing Date :NA
(62) Divisional to Application Number :NA
Filing Date :NA

(71)**Name of Applicant :**
1)INNVENTIA AB
Address of Applicant :Box 5604 S 114 86 Stockholm Sweden
(72)**Name of Inventor :**
1)SJ–HOLM Elisabeth
2)GELLERSTEDT Gran
3)DROUGGE Rickard
4)NORBERG Ida

(57) Abstract :
A method for producing a stabilized lignin fiber from softwood alkaline lignin by heat treatment in the absence of oxidant is disclosed. The stabilized lignin fiber can be further treated to obtain carbon fiber.

No. of Pages : 14 No. of Claims : 12

(12) PATENT APPLICATION PUBLICATION
(21) Application No.6639/DELNP/2014 A
(19) INDIA
(22) Date of filing of Application :07/08/2014
(43) Publication Date : 22/05/2015

(54) Title of the invention : ADHESIVE SHEET BLOOD BAG WITH ADHESIVE SHEET AND METHOD FOR PRODUCING SAME

(51) International classification :C09J7/02,A61J1/10,A61M1/02
(31) Priority Document No :2012008980
(32) Priority Date :19/01/2012
(33) Name of priority country :Japan
(86) International Application No :PCT/JP2013/050825
Filing Date :17/01/2013
(87) International Publication No :WO 2013/108845
(61) Patent of Addition to Application Number :NA
Filing Date :NA
(62) Divisional to Application Number :NA
Filing Date :NA

(71)**Name of Applicant :**
1)LINTEC CORPORATION
Address of Applicant :23 23 Honcho Itabashi ku Tokyo 1730001 Japan
(72)**Name of Inventor :**
1)YAMAGISHI Masanori

(57) Abstract :
An adhesive sheet which comprises a sheet like base and a heat sensitive adhesive layer is provided as an adhesive sheet that can be appropriately bonded to a soft vinyl chloride resin article which is an object to be bonded even if the adhesive sheet is heat sealed at a low temperature and that is suppressed in lifting or separation of the adhesive sheet or in leakage of the adhesive from an end portion of the adhesive sheet even if an autoclave treatment is carried out on the article to which the sheet is bonded. The heat sensitive adhesive layer is formed using a heat sensitive adhesive composition that contains a polyester resin and a crosslinking agent and the heat sensitive adhesive layer contains a crosslinked structure that is based on these components. The polyester resin contains an amorphous polyester resin having a glass transition temperature of from 30°C to 7°C (inclusive) in an amount of 80% by mass or more relative to the whole polyester resin.

No. of Pages : 32 No. of Claims : 7

(12) PATENT APPLICATION PUBLICATION
(19) INDIA
(22) Date of filing of Application :14/07/2014
(21) Application No.5846/DELNP/2014 A
(43) Publication Date : 22/05/2015

(54) Title of the invention : POLYETHERIMIDES METHODS OF MANUFACTURE AND ARTICLES FORMED THEREFROM

(51) International classification :C08G73/10,C08L79/08
(31) Priority Document No :12382121.7
(32) Priority Date :30/03/2012
(33) Name of priority country :EPO
(86) International Application No :PCT/US2012/072278
Filing Date :31/12/2012
(87) International Publication No :WO 2013/147957
(61) Patent of Addition to Application Number :NA
Filing Date :NA
(62) Divisional to Application Number :NA
Filing Date :NA

(71)**Name of Applicant :**
1)SABIC INNOVATIVE PLASTICS IP B.V.
Address of Applicant :Plasticslaan 1 NL 4612PX Bergen op Zoom Netherlands
(72)**Name of Inventor :**
1)GUGGENHEIM Thomas Link

(57) Abstract :
Polyetherimide compositions of formula (1) are described wherein the polyetherimide compositions comprise a polyetherimide comprising a reacted combination of alkali metal salts comprising an alkali metal salt of a dihydroxy aromatic compound and an alkali metal salt of a monohydroxy aromatic compound with a bis(halophthalimide) wherein the alkali metal salt of the monohydroxy aromatic compound is included in an amount of more than 0 and less than 5 mole percent based on the total moles of the alkali metal salts and the polyetherimide has a weight average molecular weight greater than or equal to 43 000 Daltons. The polyetherimide exhibits lower levels of chlorine and chlorine end groups lower levels of bis(halophthalimide) and bis(phthalimide) and low plate out during manufacturing.

No. of Pages : 65 No. of Claims : 46

(12) PATENT APPLICATION PUBLICATION
(19) INDIA
(22) Date of filing of Application :14/07/2014
(21) Application No.5847/DELNP/2014 A
(43) Publication Date : 22/05/2015

(54) Title of the invention : USE OF AN IONIC LIQUID FOR STORING HYDROGEN

(51) International classification :C01B3/06,C07C211/63,C07C209/00
(31) Priority Document No :12153677.5
(32) Priority Date :02/02/2012
(33) Name of priority country :EPO
(86) International Application No :PCT/EP2012/076305
Filing Date :20/12/2012
(87) International Publication No :WO 2013/113452
(61) Patent of Addition to Application Number :NA
Filing Date :NA
(62) Divisional to Application Number :NA
Filing Date :NA

(71)**Name of Applicant :**
1)VTU HOLDING GMBH
Address of Applicant :Parkring 18 A 8074 Grambach Austria
(72)**Name of Inventor :**
1)KALB Roland
2)KRAYNOV Alexander

(57) Abstract :
Method of storing hydrogen by forming a first ionic liquid by inducing a borohydride in a second ionic liquid comprising a cation and an anion comprising borate and forming the second ionic liquid by releasing the hydrogen out of the first ionic liquid by using water and/or a catalyst which method is characterized in that the first and the second ionic liquid are both water miscible and the second ionic liquid is separated particularly is salted out from solution in water by adding a separation inducer; certain ionic liquids for storing and releasing hydrogen comprising a borohydride or for preparing a ionic liquid for storing and releasing hydrogen comprising a borate; and a process for preparing ionic liquids for storing and releasing hydrogen comprising a borohydride.

No. of Pages : 34 No. of Claims : 15

(12) PATENT APPLICATION PUBLICATION
(21) Application No.6641/DELNP/2014 A
(19) INDIA
(22) Date of filing of Application :07/08/2014
(43) Publication Date : 22/05/2015

(54) Title of the invention : METHOD AND SYSTEM FOR DIAGNOSTICS AND TROUBLESHOOTING IN HOME NETWORK DEPLOYMENTS

(51) International classification	:H04B17/00,H04M3/30,H04L29/08
(31) Priority Document No	:12305303.5
(32) Priority Date	:15/03/2012
(33) Name of priority country	:EPO
(86) International Application No	:PCT/EP2013/054865
Filing Date	:11/03/2013
(87) International Publication No	:WO 2013/135624
(61) Patent of Addition to Application Number	:NA
Filing Date	:NA
(62) Divisional to Application Number	:NA
Filing Date	:NA

(71)**Name of Applicant :**
1)ALCATEL LUCENT
Address of Applicant :148/152 route de la Reine F 92100 Boulogne Billancourt France
(72)**Name of Inventor :**
1)GACANIN Haris

(57) Abstract :
Method for analysing at a remote server a problem of a home network comprising the following steps performed at the remote server which is connected through the internet with the home network: storing reference data of at least one home network performance parameter covering a frequency band said reference data corresponding with a normal behaviour of the home network;
obtaining through the internet measurement data of said at least one home network performance parameter covering said frequency band; comparing said measurement data with said reference data to determine qualification data qualifying the problem.

No. of Pages : 24 No. of Claims : 15

(12) PATENT APPLICATION PUBLICATION
(19) INDIA
(22) Date of filing of Application :07/08/2014
(21) Application No.6643/DELNP/2014 A
(43) Publication Date : 22/05/2015

(54) Title of the invention : THICK TREAD FOR CIVIL ENGINEERING TYRES

(51) International classification :B60C11/04,B60C11/13
(31) Priority Document No :1252368
(32) Priority Date :15/03/2012
(33) Name of priority country :France
(86) International Application No :PCT/EP2013/053537
Filing Date :22/02/2013
(87) International Publication No :WO 2013/135473
(61) Patent of Addition to Application Number :NA
Filing Date :NA
(62) Divisional to Application Number :NA
Filing Date :NA

(71)**Name of Applicant :**
1)COMPAGNIE GENERALE DES ETABLISSEMENTS MICHELIN
Address of Applicant :12 Cours Sablon F 63000 Clermont Ferrand France
2)MICHELIN RECHERCHE ET TECHNIQUE S.A.
(72)**Name of Inventor :**
1)CHAUVIN Dominique

(57) Abstract :
A tread (1) for civil engineering tyres said tread comprising blocks (3) in a central part and edge ribs (2 4) each block in the central row having a width Ltb measured in a direction parallel to the transversal peaks and a width Lcb measured in the circumferential direction the tread (1) according to the invention being characterised in that each edge rib (2 4) comprises a plurality of notches (21 41) forming recesses of transversal width Lte and circumferential length Lce each notch being delimited along its entire height He by transversally oriented walls and one circumferentially oriented wall each notch (21 41) being geometrically appropriate to accommodate at least one end part of a block of the central region leaving a circumferential clearance Ac (measured in the circumferential direction) and a transversal clearance At (measured in the transversal or axial direction) said clearances Ac and At being determined so as to ensure under the normal driving conditions of the tyre with said tread at least partial contact by the end part of said block of the central region with at least one of the transversally oriented walls of each notch (21 41) thereby preventing each of the blocks (3) having its ends fixed in place within said notches from coming into contact with the neighbouring blocks of the central row.

No. of Pages : 21 No. of Claims : 7

(12) PATENT APPLICATION PUBLICATION
(19) INDIA
(22) Date of filing of Application :14/07/2014
(21) Application No.5871/DELNP/2014 A
(43) Publication Date : 22/05/2015

(54) Title of the invention : BEVERAGE MACHINE FOR SHORT AND TALL CUPS

(51) International classification :A47J31/44
(31) Priority Document No :12151059.8
(32) Priority Date :13/01/2012
(33) Name of priority country :EPO
(86) International Application No :PCT/EP2013/050242
Filing Date :09/01/2013
(87) International Publication No :WO 2013/104636
(61) Patent of Addition to Application Number :NA
Filing Date :NA
(62) Divisional to Application Number :NA
Filing Date :NA

(71)**Name of Applicant :**
1)NESTEC S.A.
Address of Applicant :Av. Nestl 55 CH 1800 Vevey Switzerland
(72)**Name of Inventor :**
1)CAHEN Antoine
2)BESSON Fran§ois

(57) Abstract :
A heightening device (10) is arranged for heightening a short cup (3) under a beverage outlet (20) of a beverage preparation module (2) configured to dispense beverage into a tall cup (3). The device (10) comprises: a bottom (12) for resting on a support surface (5); a platform (14) that is supported by the bottom and that is configured for receiving said short cup (3) and heightening thereof over the bottom (12); and a means (15 16) for assembling the bottom and the platform as a unit (12 14) to a corresponding assembling means (25 26) of said beverage preparation module under said outlet. The assembling means (15 16; 25 26) of such device (10) and of the module (2) are disassemblable for separating the unit (12 14) from the module and removing the unit from under such beverage outlet (20) to allow placement of the tall cup (3) on said support surface (5) under the outlet (20).

No. of Pages : 25 No. of Claims : 15

(12) PATENT APPLICATION PUBLICATION
(21) Application No.5872/DELNP/2014 A
(19) INDIA
(22) Date of filing of Application :14/07/2014
(43) Publication Date : 22/05/2015

(54) Title of the invention : COMPOSITIONS USEFUL AS ANIMAL LITTERS

(51) International classification :A01K29/00
(31) Priority Document No :61/586896
(32) Priority Date :16/01/2012
(33) Name of priority country :U.S.A.
(86) International Application No :PCT/US2012/041461
Filing Date :08/06/2012
(87) International Publication No :WO 2013/109303
(61) Patent of Addition to Application Number :NA
Filing Date :NA
(62) Divisional to Application Number :NA
Filing Date :NA

(71)**Name of Applicant :**
1)NESTEC S.A.
Address of Applicant :Avenue Nestle 55 CH 1800 Vevey Switzerland
(72)**Name of Inventor :**
1)ZHANG Yimin

(57) Abstract :
The invention provides a composition suitable for use as an animal litter comprising a first component having a density less than that of liquid and a second component having a density of at least 5 lb/ft3 (80 mg/cm3) greater than the first component. The invention is based upon the discovery that adding liquid such as urine to a composition having two components with significant differences in density one of which is less than the density of the liquid will result in the component with the lesser density floating to the top of the liquid while the component with the greater density will segregate below the component with the lesser density.

No. of Pages : 21 No. of Claims : 60

(12) PATENT APPLICATION PUBLICATION
(19) INDIA
(22) Date of filing of Application :07/08/2014
(21) Application No.6651/DELNP/2014 A
(43) Publication Date : 22/05/2015

(54) Title of the invention : UNORIENTED FILM BASED ON SOFT POLYPROPYLENE

(51) International classification :C08L23/14,B32B27/32,C08J5/18
(31) Priority Document No :12162119.7
(32) Priority Date :29/03/2012
(33) Name of priority country :EPO
(86) International Application No :PCT/EP2013/056209
Filing Date :25/03/2013
(87) International Publication No :WO 2013/144061
(61) Patent of Addition to Application Number :NA
Filing Date :NA
(62) Divisional to Application Number :NA
Filing Date :NA

(71)**Name of Applicant :**
1)BOREALIS AG
Address of Applicant :IZD Tower Wagramerstrae 17 19 A 1220 Vienna Austria
(72)**Name of Inventor :**
1)BERNREITNER Klaus
2)GAHLEITNER Markus
3)GRUENBERGER Manfred
4)SANDHOLZER Martina

(57) Abstract :
Unoriented film comprising at least one layer of a polymer composition comprising a styrenic based elastomer and a propylene copolymer.

No. of Pages : 58 No. of Claims : 15

(12) PATENT APPLICATION PUBLICATION
(19) INDIA
(22) Date of filing of Application :07/08/2014
(21) Application No.6652/DELNP/2014 A
(43) Publication Date : 22/05/2015

(54) Title of the invention : RECOMBINANT BACTERIA COMPRISING NOVEL SUCROSE TRANSPORTERS

(51) International classification :C07K14/195,C07K14/24,C07K14/245
(31) Priority Document No :13/412193
(32) Priority Date :05/03/2012
(33) Name of priority country :U.S.A.
(86) International Application No :PCT/US2013/028970
Filing Date :05/03/2013
(87) International Publication No :WO 2013/134174
(61) Patent of Addition to Application Number :NA
Filing Date :NA
(62) Divisional to Application Number :NA
Filing Date :NA

(71)**Name of Applicant :**
1)E. I. DU PONT DE NEMOURS AND COMPANY
Address of Applicant :1007 Market Street Wilmington Delaware 19898 U.S.A.
(72)**Name of Inventor :**
1)RUEBLING JASS Kristin
2)TOMB Jean Francois
3)VAN DYK Tina K.
4)YOU Zheng

(57) Abstract :
Recombinant bacteria capable of metabolizing sucrose are described. The recombinant bacteria comprise in their genome or on at least one recombinant construct a novel nucleotide sequence encoding a polypeptide having sucrose transporter activity and a nucleotide sequence encoding a polypeptide having sucrose hydrolase activity. These nucleotide sequences are each operably linked to the same or a different promoter. Recombinant bacteria capable of metabolizing sucrose to produce glycerol and/or glycerol derived products such as 1 3 propanediol and 3 hydroxypropionic acid are also described.

No. of Pages : 295 No. of Claims : 8

(12) PATENT APPLICATION PUBLICATION
(19) INDIA
(22) Date of filing of Application :07/08/2014
(21) Application No.6654/DELNP/2014 A
(43) Publication Date : 22/05/2015

(54) Title of the invention : SUPPORT DEVICE AND CONVEYANCE DEVICE

(51) International classification :B61D3/16,B21C47/24,B61B13/00
(31) Priority Document No :2012241797
(32) Priority Date :01/11/2012
(33) Name of priority country :Japan
(86) International Application No :PCT/JP2013/067366
Filing Date :25/06/2013
(87) International Publication No :WO 2014/069044
(61) Patent of Addition to Application Number :NA
Filing Date :NA
(62) Divisional to Application Number :NA
Filing Date :NA

(71)**Name of Applicant :**
1)MITSUBISHI HEAVY INDUSTRIES MACHINERY TECHNOLOGY CORPORATION
Address of Applicant :6 22 Kan on Shin machi 4 chome Nishi ku Hiroshima shi Hiroshima 7338553 Japan
(72)**Name of Inventor :**
1)SHIMOTSU Toshihito

(57) Abstract :
A support device is provided with coil receiving surfaces (10a 10b) on which a hot coil is placed base plates (7a 7b) which are disposed below the coil receiving surfaces (10a 10b) and heat insulating bodies (12) which are disposed between the base plates (7a 7b) and the coil receiving surfaces (10a 10b) and which block the transfer of heat from the coil receiving surfaces (10a 10b) to the base plates (7a 7b). Each of the base plates (7a 7b) and/or the corresponding one of the coil receiving surfaces (10a 10b) has a contact section (15) which forms a space between each edge (12b) of the heat insulating body (12) and the base plate (7a 7b) and/or the coil receiving surface (10a 10b) and which is in contact with the region of the heat insulating body (12) which is closer to the center of the heat insulating body (12) than the edges (12b).

No. of Pages : 27 No. of Claims : 6

(12) PATENT APPLICATION PUBLICATION
(19) INDIA
(22) Date of filing of Application :14/07/2014
(21) Application No.5881/DELNP/2014 A
(43) Publication Date : 22/05/2015

(54) Title of the invention : CONCENTRATED LOW WATER ACTIVITY LIQUID HUMAN MILK FORTIFIER INCLUDING EXTENSIVELY HYDROLYZED PROTEIN

(51) International classification :A23L1/305,A23C9/20,A23L1/29
(31) Priority Document No :61/581637
(32) Priority Date :30/12/2011
(33) Name of priority country :U.S.A.
(86) International Application No :PCT/US2012/066222
Filing Date :21/11/2012
(87) International Publication No :WO 2013/101367
(61) Patent of Addition to Application Number :NA
Filing Date :NA
(62) Divisional to Application Number :NA
Filing Date :NA

(71)**Name of Applicant :**
1)ABBOTT LABORATORIES
Address of Applicant :100 Abbott Park Road Abbott Park IL 60064 U.S.A.
(72)**Name of Inventor :**
1)VURMA Mustafa
2)MAHAN Kevin B.
3)BOFF Jeffrey M.

(57) Abstract :
Disclosed are concentrated liquid human milk fortifiers including extensively hydrolyzed casein and optionally a probiotic. The concentrated liquid human milk fortifier has a low water activity and a low pH thereby reducing microbial growth in the fortifier.

No. of Pages : 36 No. of Claims : 15

(12) PATENT APPLICATION PUBLICATION
(19) INDIA
(22) Date of filing of Application :14/07/2014
(21) Application No.5882/DELNP/2014 A
(43) Publication Date : 22/05/2015

(54) Title of the invention : FILE TRANSFER USING XML

(51) International classification :G06F17/00
(31) Priority Document No :NA
(32) Priority Date :NA
(33) Name of priority country :NA
(86) International Application No :PCT/US2012/034943
Filing Date :25/04/2012
(87) International Publication No :WO 2013/162542
(61) Patent of Addition to Application Number :NA
Filing Date :NA
(62) Divisional to Application Number :NA
Filing Date :NA

(71)**Name of Applicant :**
1)HEWLETT PACKARD DEVELOPMENT COMPANY L.P.
Address of Applicant :11445 Compaq Center Drive W. Houston Texas 77070 U.S.A.
(72)**Name of Inventor :**
1)MELVIN Jonathan

(57) Abstract :
A tangible machine readable storage medium stores instructions and implements a method when the instructions are executed by a processor. A source file is received by a gateway engine. The source file is a binary file. The source file is portioned into multiple parts by a breakdown engine. The multiple parts are transferred by a reliable transfer engine using a single port according to a messaging protocol to transfer messages reliably between nodes in the presence of any of software failures component failures system failures or network failures. The multiple parts are reassembled into a copy of the source file by a reassembly engine.

No. of Pages : 30 No. of Claims : 15

(12) PATENT APPLICATION PUBLICATION
(19) INDIA
(22) Date of filing of Application :14/07/2014
(21) Application No.5883/DELNP/2014 A
(43) Publication Date : 22/05/2015

(54) Title of the invention : ALGAL THERMOPLASTICS THERMOSETS PAPER ADSORBANTS AND ABSORBANTS

(51) International classification :C12N1/12,C08L101/16,B01J20/22
(31) Priority Document No :61/579961
(32) Priority Date :23/12/2011
(33) Name of priority country :U.S.A.
(86) International Application No :PCT/US2012/071462
Filing Date :21/12/2012
(87) International Publication No :WO 2013/096891
(61) Patent of Addition to Application Number :NA
Filing Date :NA
(62) Divisional to Application Number :NA
Filing Date :NA

(71)**Name of Applicant :**
1)SOLAZYME INC.
Address of Applicant :225 Gateway Boulevard South San Francisco California 94080 U.S.A.
(72)**Name of Inventor :**
1)HARLIN Ali
2)JAASKELAINEN Anna stiina
3)KIURU Jani
4)LAINE Christiane
5)LIITIA Tiina
6)NATTINEN Kalle
7)PERE Jaakko
8)SOUSA Sonia
9)PIECHOCKI John
10)MCKEE Adrienne
11)CERNOHOUS Jeffrey J.
12)PAWLOSKI Adam R.

(57) Abstract :
Provided are biomass based materials and valuable uses of microalgal biomass including: (i) acetylation of microalgal biomass to produce a material useful in the production of thermoplastics; (ii) use of triglyceride containing microalgal biomass for production of thermoplastics; (iii) combination of microalgal biomass and at least one type of plant polymer to produce a material useful in the production of thermoplastics; (iv) anionization of microalgal biomass to form a water absorbant material; (v) cationization of microalgal biomass and optional flocculation to form a water absorbant material; (vi) crosslinking of anionized microalgal biomass; (vii) carbonization of microalgal biomass; and (viii) use of microalgal biomass in the making of paper.

No. of Pages : 118 No. of Claims : 178

(12) PATENT APPLICATION PUBLICATION
(21) Application No.5884/DELNP/2014 A
(19) INDIA
(22) Date of filing of Application :14/07/2014
(43) Publication Date : 22/05/2015

(54) Title of the invention : ANIMAL FEED AND A PROCESS FOR ITS PREPARATION

(51) International classification :A23K1/16,A23K1/18
(31) Priority Document No :20120031
(32) Priority Date :31/01/2012
(33) Name of priority country :Finland
(86) International Application No :PCT/FI2013/000003
Filing Date :31/01/2013
(87) International Publication No :WO 2013/113980
(61) Patent of Addition to Application Number :NA
Filing Date :NA
(62) Divisional to Application Number :NA
Filing Date :NA

(71)**Name of Applicant :**
1)BENEMILK LTD
Address of Applicant :Raisionkaari 55 FI 21200 Raisio Finland
(72)**Name of Inventor :**
1)HOLMA Merja

(57) Abstract :
An object of the invention is a feed by means of which milk production of cows and milk fat content can be increased. Preferably at the same time milk protein content is increased. Preferably also the trans fatty acid content of milk fat is lowered. The feed according tothe invention contains in addition to conventional feed ingredients and conventional additives and other auxiliary agents inside and on the surface of feed raw material particles a fatty acid mixture in which the content of saturated fatty acids is more than 90 %. The invention is also directed to a process for preparing said feed as well as to a method for changing milk fatty acid composition for increasing milk production and for increasing milk fat content and increasing milk protein content.

No. of Pages : 26 No. of Claims : 27

(12) PATENT APPLICATION PUBLICATION
(19) INDIA
(22) Date of filing of Application :07/08/2014
(21) Application No.6660/DELNP/2014 A
(43) Publication Date : 22/05/2015

(54) Title of the invention : USE OF LYSOZYME AS A TAG

(51) International classification :C07K1/22,C12N15/62
(31) Priority Document No :12152095.1
(32) Priority Date :23/01/2012
(33) Name of priority country :EPO
(86) International Application No :PCT/EP2013/051181
Filing Date :23/01/2013
(87) International Publication No :WO 2013/110627
(61) Patent of Addition to Application Number :NA
Filing Date :NA
(62) Divisional to Application Number :NA
Filing Date :NA

(71)**Name of Applicant :**
1)MORPHOSYS AG
Address of Applicant :Lena Christ Strasse 48 82152 Martinsried/Planegg Germany
(72)**Name of Inventor :**
1)HAERTLE Stefan
2)JAEGER Sebastian
3)DAUBERT Daniela

(57) Abstract :
The present disclosure provides a method to express and purify polypeptides and proteins. In the present disclosure the use of lysozyme as a fusion partner is disclosed. Furthermore purification methods to isolate lysozyme tagged polypeptides and proteins via lysozyme specific antibodies are described. More specifically the present disclosure provides a method to express and purify monomeric polypeptides and proteins by using lysozyme as a tag.

No. of Pages : 43 No. of Claims : 13

(12) PATENT APPLICATION PUBLICATION
(21) Application No.3303/DELNP/2014 A
(19) INDIA
(22) Date of filing of Application :24/04/2014
(43) Publication Date : 22/05/2015

(54) Title of the invention : OPTICAL READABLE CODE SUPPORT AND CAPSULE FOR PREPARING A BEVERAGE HAVING SUCH CODE SUPPORT PROVIDING AN ENHANCED READABLE OPTICAL SIGNAL

(51) International classification :A47J31/44
(31) Priority Document No :11189232.9
(32) Priority Date :15/11/2011
(33) Name of priority country :EPO
(86) International Application No :PCT/EP2012/072536
Filing Date :14/11/2012
(87) International Publication No :WO 2013/072326
(61) Patent of Addition to Application Number :NA
Filing Date :NA
(62) Divisional to Application Number :NA
Filing Date :NA

(71)**Name of Applicant :**
1)NESTEC S.A.
Address of Applicant :Av. Nestl 55 CH 1800 Vevey Switzerland
(72)**Name of Inventor :**
1)NORDQVIST David
2)ABEGGLEN Daniel
3)GERBAULET Arnaud
4)JARISCH Christian

(57) Abstract :
An optically readable code support (30) to be associated with or be part of a capsule intended for delivering a beverage in a beverage producing device the support comprising at least one sequence of symbols represented on the support so that each symbol is sequentially readable by a reading arrangement of an external reading device while the capsule is driven in rotation along an axis of rotation wherein the symbols are essentially formed of a succession of light reflective surface portions (610 615) and light absorbing surface portions (600 604); said light absorbing surface portions providing a lower light reflective intensity than the light reflective surface portions wherein the code support comprises at least one base layer (500) extending continuously at least along said sequence of symbols wherein the light absorbing surface portions are roughened surface portions having a higher rugosity (Rz) than the light reflective surface portions.

No. of Pages : 41 No. of Claims : 15

(12) PATENT APPLICATION PUBLICATION
(21) Application No.3304/DELNP/2014 A
(19) INDIA
(22) Date of filing of Application :24/04/2014
(43) Publication Date : 22/05/2015

(54) Title of the invention : SUPPORT AND CAPSULE FOR PREPARING A BEVERAGE BY CENTRIFUGATION SYSTEM AND METHOD FOR PREPARING A BEVERAGE BY CENTRIFUGATION

(51) International classification :A47J31/22,G06K19/06,A47J31/44
(31) Priority Document No :11189414.3
(32) Priority Date :16/11/2011
(33) Name of priority country :EPO
(86) International Application No :PCT/EP2012/072584
Filing Date :14/11/2012
(87) International Publication No :WO 2013/072351
(61) Patent of Addition to Application Number :NA
Filing Date :NA
(62) Divisional to Application Number :NA
Filing Date :NA

(71)**Name of Applicant :**
1)NESTEC S.A.
Address of Applicant :Av. Nestl 55 CH 1800 Vevey Sweden
(72)**Name of Inventor :**
1)JARISCH Christian
2)KAESER Stefan
3)GERBAULET Arnaud

(57) Abstract :
The invention relates to a code support (60a 60b) adapted to be associated with or part of a capsule intended for delivering a beverage in a beverage producing device by centrifugation of the capsule. The support comprises a code formed by at least a first sequence of symbols and a second sequence of symbols. The code is represented on the support so that each symbol is sequentially readable by a reading arrangement (100) of an external reading device while the capsule is driven in rotation along an axis of rotation (Z). The first sequence comprises at least one first preamble sequence of symbols and at least one first data sequence of symbols. The second sequence comprises at least one second preamble sequence of symbols and at least one second data sequence of symbols. The first preamble sequence is distinct from the second preamble sequence.

No. of Pages : 31 No. of Claims : 12

(12) PATENT APPLICATION PUBLICATION
(19) INDIA
(22) Date of filing of Application :14/07/2014
(21) Application No.5840/DELNP/2014 A
(43) Publication Date : 22/05/2015

(54) Title of the invention : CONTROL OF THE GAS COMPOSITION IN A GAS TURBINE POWER PLANT WITH FLUE GAS RECIRCULATION

(51) International classification :F02C6/18,F01K23/10,F02C3/34
(31) Priority Document No :11194242.1
(32) Priority Date :19/12/2011
(33) Name of priority country :EPO
(86) International Application No :PCT/EP2012/075553
Filing Date :14/12/2012
(87) International Publication No :WO 2013/092411
(61) Patent of Addition to Application Number :NA
Filing Date :NA
(62) Divisional to Application Number :NA
Filing Date :NA

(71)**Name of Applicant :**
1)ALSTOM TECHNOLOGY LTD
Address of Applicant :Brown Boveri Strasse 7 CH 5400 Baden Switzerland
(72)**Name of Inventor :**
1)H–VEL Michael

(57) Abstract :
The invention relates to a method for operating a gas turbine power plant (38) with exhaust gas recirculation. In the method a setpoint concentration of one component (C) of the inlet gas (3) and/or of the hot working gas and/or of the exhaust gas of the gas turbine (8 19 20 21 24) is determined in a first step in accordance with the operating conditions of the gas turbine (6) from a combination of a setpoint value of a control loop a feedforward control signal and a correction value. In a second step the position of a control element (11 29) is adjusted in accordance with the setpoint/actual deviation in the concentration of the component. The invention furthermore relates to a gas turbine power plant for carrying out the method.

No. of Pages : 25 No. of Claims : 15

(12) PATENT APPLICATION PUBLICATION
(19) INDIA
(22) Date of filing of Application :08/08/2014
(21) Application No.6667/DELNP/2014 A
(43) Publication Date : 22/05/2015

(54) Title of the invention : TOBACCO SMOKE FILTER

(51) International classification :A24D3/06,A24D3/08
(31) Priority Document No :1203202.5
(32) Priority Date :23/02/2012
(33) Name of priority country :U.K.
(86) International Application No :PCT/EP2013/053654
Filing Date :25/02/2013
(87) International Publication No :WO 2013/124475
(61) Patent of Addition to Application Number :NA
Filing Date :NA
(62) Divisional to Application Number :NA
Filing Date :NA

(71)**Name of Applicant :**
1)ESSENTRA FILTER PRODUCTS DEVELOPMENT CO. PTE. LTD
Address of Applicant :238A Thomson Road 25 04/05 Novena Square Singapore 307684 Singapore
(72)**Name of Inventor :**
1)MCCORMACK Anthony Denis
2)TIPPER Matthew James
3)RUSSELL Stephen John
4)CHETTY Vera

(57) Abstract :
A tobacco smoke filter or filter element including a nonwoven fabric wherein the nonwoven fabric comprises: a sheet of staple fibres; and a water soluble binder; wherein the water soluble binder is uniformly coated on at least one face of the sheet of staple fibres. The filter has superior biodegradability.

No. of Pages : 18 No. of Claims : 25

(12) PATENT APPLICATION PUBLICATION
(21) Application No.3831/DEL/2013 A
(19) INDIA
(22) Date of filing of Application :31/12/2013
(43) Publication Date : 22/05/2015

(54) Title of the invention : HORIZONTAL DOUBLE DISC SURFACE GRINDING MACHINE

(51) International classification	:B24B
(31) Priority Document No	:JP2013-236592
(32) Priority Date	:15/11/2013
(33) Name of priority country	:Japan
(86) International Application No	:NA
Filing Date	:NA
(87) International Publication No	: NA
(61) Patent of Addition to Application Number	:NA
Filing Date	:NA
(62) Divisional to Application Number	:NA
Filing Date	:NA

(71)**Name of Applicant :**
1)DAISHO CORPORATION
Address of Applicant :25-45, KODA 4-CHROME, IKEDA-SHI, OSAKA, JAPAN
(72)**Name of Inventor :**
1)SHOJI YOSHIZURU

(57) Abstract :
A horizontal double disc surface grinding machine of through field type wherein a plate work (10) in vertical posture is induced between grinding wheels (2) by V-belts (11) and work guiding plates (12). A work falling prevention member (26) is disposed in a work transfer area (Z) . The work falling prevention member (26) is provided with an upper plate (26A), a middle plate (26C), and a lower plate (26B), and the middle plate (26C) is inserted to a gap (G , ,) between V-belt single bodies (11A).

No. of Pages : 33 No. of Claims : 4

(12) PATENT APPLICATION PUBLICATION
(19) INDIA
(22) Date of filing of Application :02/01/2015
(21) Application No.46/DELNP/2015 A
(43) Publication Date : 22/05/2015

(54) Title of the invention : WASTEWATER SCREEN FILTER AND CHAIN TENSIONER

(51) International classification :B01D29/64,E02B8/02
(31) Priority Document No :61/667631
(32) Priority Date :03/07/2012
(33) Name of priority country :U.S.A.
(86) International Application No :PCT/US2013/049308
Filing Date :03/07/2013
(87) International Publication No :WO 2014/008390
(61) Patent of Addition to Application Number :NA
Filing Date :NA
(62) Divisional to Application Number :NA
Filing Date :NA

(71)**Name of Applicant :**
1)HEADWORKS BIO INC.
Address of Applicant :800 Wilcrest Suite 340 Houston Texas 77042 U.S.A.
(72)**Name of Inventor :**
1)DAVENPORT Steven
2)SANTOS MALDONADO Joel

(57) Abstract :
A screen filter for wastewater applications includes a chain tensioner assembly configured to provide a tensioning force for a screen filter chain. The chain tensioner assembly includes a slide plate configured to move axially with respect to the screen filter chain and a shaft mount attached to the slide plate and configured to mount a shaft. The chain tensioner assembly additionally includes an abutment member attached to the slide plate. The chain tensioner assembly further includes a spring adjuster having at least one spring and configured to contact the abutment member to provide a bias force to the slide plate.

No. of Pages : 21 No. of Claims : 20

(12) PATENT APPLICATION PUBLICATION
(19) INDIA
(22) Date of filing of Application :01/07/2013
(21) Application No.5893/DELNP/2013 A
(43) Publication Date : 22/05/2015

(54) Title of the invention : INFANT FORMULA CONTAINER

(51) International classification :B65D51/24
(31) Priority Document No :61/425978
(32) Priority Date :22/12/2010
(33) Name of priority country :U.S.A.
(86) International Application No :PCT/IB2011/055719
Filing Date :15/12/2011
(87) International Publication No :WO 2012/085783
(61) Patent of Addition to Application Number :NA
Filing Date :NA
(62) Divisional to Application Number :NA
Filing Date :NA

(71)**Name of Applicant :**
1)NESTEC S.A.
Address of Applicant :Avenue Nestl 55 CH 1800 Vevey Switzerland
(72)**Name of Inventor :**
1)IRANI Zena J.
2)BOOTH Peter
3)ELSTOW Corinne

(57) Abstract :
A container (100) for storing and dispensing flowable nutritional products. The container (100) includes a reservoir (101) a removable seal (103) a collar (102) a lid (104) hingedly attached to the collar and a docking station (106) for a measuring device (107) such as a scoop for measuring the product. The container may also include a leveling bar (108) to use in conjunction with the measuring device (107).

No. of Pages : 13 No. of Claims : 10

(12) PATENT APPLICATION PUBLICATION
(19) INDIA
(22) Date of filing of Application :05/08/2014
(21) Application No.6559/DELNP/2014 A
(43) Publication Date : 22/05/2015

(54) Title of the invention : HAIR COLOURING METHODS AND COMPOSITIONS THEREOF

(51) International classification :A61K8/73,A61Q5/10,A61K8/898
(31) Priority Document No :61/602637
(32) Priority Date :24/02/2012
(33) Name of priority country :U.S.A.
(86) International Application No :PCT/US2013/027268
Filing Date :22/02/2013
(87) International Publication No :WO 2013/126657
(61) Patent of Addition to Application Number :NA
Filing Date :NA
(62) Divisional to Application Number :NA
Filing Date :NA

(71)**Name of Applicant :**
1)THE PROCTER & GAMBLE COMPANY
Address of Applicant :One Procter & Gamble Plaza Cincinnati OH 45202 U.S.A.
(72)**Name of Inventor :**
1)AGOSTINO Elizabeth Hitchcock
2)RIPLEY Aideen Noelle
3)SCHOFIELD Stephen Robert
4)STEPHENS Tracy
5)VOHRA Firoj
6)DE WAAL Gabriele
7)MYATT Graham John
8)BUREIKO Andrei Serfeevich
9)LANE Brandon Scott
10)MARSH Jennifer Mary
11)VANDERHORST Jaime Beverly
12)GODFREY Simon Paul
13)ODMAN Ozge

(57) Abstract :
The present invention relates to a method for colouring hair wherein a hair colouring composition is applied to the hair roots. The hair colouring composition is then diluted with a dilutant component and the diluted hair colouring composition is applied to the hair lengths and tips.

No. of Pages : 51 No. of Claims : 17

(12) PATENT APPLICATION PUBLICATION
(19) INDIA
(22) Date of filing of Application :08/08/2014
(21) Application No.6671/DELNP/2014 A
(43) Publication Date : 22/05/2015

(54) Title of the invention : SHAPED CUTTING ELEMENTS FOR EARTH BORING TOOLS AND EARTH BORING TOOLS INCLUDING SUCH CUTTING ELEMENTS

(51) International classification	:E21B10/43,E21B10/42,E21B10/62
(31) Priority Document No	:61/596433
(32) Priority Date	:08/02/2012
(33) Name of priority country	:U.S.A.
(86) International Application No	:PCT/US2013/025318
Filing Date	:08/02/2013
(87) International Publication No	:WO 2013/119930
(61) Patent of Addition to Application Number	:NA
Filing Date	:NA
(62) Divisional to Application Number	:NA
Filing Date	:NA

(71)**Name of Applicant :**
1)BAKER HUGHES INCORPORATED
Address of Applicant :P.O. Box 4740 Houston TX 77210 4740 U.S.A.
(72)**Name of Inventor :**
1)BILEN Juan Miguel
2)SCOTT Danny E.
3)PATEL Surech G.
4)MATTHEWS Oliver
5)NELMS Derek L
6)LYONS Nicholas J.

(57) Abstract :
Cutting elements for an earth boring tool include a substrate base and a cutting tip. The cutting tip may include a first generally conical surface a second opposite generally conical surface a first flank surface extending between the first and second generally conical surfaces and a second opposite flank surface. In some embodiments the cutting tip includes a central axis that is not co linear with a longitudinal axis of the substrate base. In some embodiments the cutting tip includes a surface defining a longitudinal end thereof that is relatively more narrow in a central region thereof than in a radially outer region thereof. Earth boring tools include a body and a plurality of such cutting elements attached thereto at least one cutting element oriented to initially engage a formation with the first or second generally conical surface thereof. Methods of drilling a formation use such cutting elements and earth boring tools.

No. of Pages : 40 No. of Claims : 20

(12) PATENT APPLICATION PUBLICATION
(19) INDIA
(22) Date of filing of Application :11/06/2014
(21) Application No.4766/DELNP/2014 A
(43) Publication Date : 22/05/2015

(54) Title of the invention : DRIP TRAY FOR BEVERAGES DISPENSER

(51) International classification :A47J31/44
(31) Priority Document No :11193005.3
(32) Priority Date :12/12/2011
(33) Name of priority country :EPO
(86) International Application No :PCT/EP2012/075046
Filing Date :11/12/2012
(87) International Publication No :WO 2013/087607
(61) Patent of Addition to Application Number :NA
Filing Date :NA
(62) Divisional to Application Number :NA
Filing Date :NA

(71)**Name of Applicant :**
1)NESTEC S.A.
Address of Applicant :Av. Nestl 55 CH 1800 Vevey Switzerland
(72)**Name of Inventor :**
1)LARDELLI Silvio
2)HESS Michel
3)REY Cdric
4)CALDERONE Roberto Angelo

(57) Abstract :
The invention concerns a beverage dispenser (2) comprising : a beverage module having at least one beverage outlet (21) a drip tray (1) said drip tray comprising :. a collecting tray (11) and. a filtering member (12) positioned above at least the front part (111) of the tray wherein the drip tray comprises a lid (13) for covering the back part (112) of the tray.

No. of Pages : 11 No. of Claims : 10

(12) PATENT APPLICATION PUBLICATION
(19) INDIA
(22) Date of filing of Application :11/06/2014
(21) Application No.4767/DELNP/2014 A
(43) Publication Date : 22/05/2015

(54) Title of the invention : VEGETABLE BASED MINCED MEAT ALTERNATIVE

(51) International classification :A23J3/12,A23J3/18,A23L1/00
(31) Priority Document No :11193078.0
(32) Priority Date :12/12/2011
(33) Name of priority country :EPO
(86) International Application No :PCT/EP2012/074913
Filing Date :10/12/2012
(87) International Publication No :WO 2013/087558
(61) Patent of Addition to Application Number :NA
Filing Date :NA
(62) Divisional to Application Number :NA
Filing Date :NA

(71)**Name of Applicant :**
1)NESTEC S.A.
Address of Applicant :Av. Nestl 55 CH 1800 Vevey Switzerland
(72)**Name of Inventor :**
1)APPEL Daniel Sebastian
2)GRAF Andrea
3)FERNANDES Sheldon
4)BERENDS Pieter

(57) Abstract :
A vegetable based food product comprising at least 50 wt% protein wherein the protein is gluten or is proteinaceous material derived from gluten and wherein the product has the texture of minced meat. A method for preparing a vegetable based food product including fermenting a gluten based material with a mould and then processing the fermented product into a vegetable based food product for use as a replacement for minced meat.

No. of Pages : 11 No. of Claims : 15

(12) PATENT APPLICATION PUBLICATION
(19) INDIA
(22) Date of filing of Application :05/08/2014
(21) Application No.6580/DELNP/2014 A
(43) Publication Date : 22/05/2015

(54) Title of the invention : ORGANIC COMPOUNDS

(51) International classification :A61K31/519
(31) Priority Document No :61/587030
(32) Priority Date :16/01/2012
(33) Name of priority country :U.S.A.
(86) International Application No :PCT/US2013/021749
Filing Date :16/01/2013
(87) International Publication No :WO 2013/109632
(61) Patent of Addition to Application Number :NA
Filing Date :NA
(62) Divisional to Application Number :NA
Filing Date :NA

(71)**Name of Applicant :**
1)THE ROCKEFELLER UNIVERSITY
Address of Applicant :1230 York Avenue New York New York 10065 U.S.A.
2)THE UNITED STATES OF AMERICA AS REPRESENTED BY THE SECRETARY DEPARTMENT OF HEALTH AND HUMAN SERVICES
3)MOUNT SINAI SCHOOL OF MEDICINE
(72)**Name of Inventor :**
1)COLLER Barry S.
2)THOMAS Craig
3)FILIZOLA Marta
4)MCCOY Joshua
5)HUANG Wenwei
6)SHEN Min
7)JIANG Jian Kang

(57) Abstract :
The present invention relates to compounds and compositions useful for inhibiting and/or reducing platelet deposition adhesion and/or aggregation. The present invention further relates to a drug eluting stent comprising said compounds and methods for the treatment or prophylaxis of thrombotic disorders including stroke myocardial infarction unstable angina peripheral vascular disease abrupt closure following angioplasty or stent placement and thrombosis as a result of vascular surgery.

No. of Pages : 74 No. of Claims : 22

(12) PATENT APPLICATION PUBLICATION
(19) INDIA
(22) Date of filing of Application :05/08/2014
(21) Application No.6581/DELNP/2014 A
(43) Publication Date : 22/05/2015

(54) Title of the invention : MODIFIABLE OCCLUSIVE SKIN DRESSING

(51) International classification :A61L26/00,A61F13/02,A61M1/00
(31) Priority Document No :61/588121
(32) Priority Date :18/01/2012
(33) Name of priority country :U.S.A.
(86) International Application No :PCT/US2013/022327
Filing Date :18/01/2013
(87) International Publication No :WO 2013/110008
(61) Patent of Addition to Application Number :NA
Filing Date :NA
(62) Divisional to Application Number :NA
Filing Date :NA

(71)**Name of Applicant :**
1)WORLDWIDE INNOVATIVE HEALTHCARE INC.
Address of Applicant :240 Main Street P.O. Box 425584 Cambridge MA 02142 9998 U.S.A.
(72)**Name of Inventor :**
1)ZUROVCIK Danielle

(57) Abstract :
Occlusive tissue dressings and methods including an elastomeric drape and a liquid component at least partially cross linked at least after one of drying and curing suitable for application at a dressing to skin interface in order to create a substantially air tight seal. The same or a different liquid component may be applied by a user at a tube to dressing interface in order to create a similar air tight seal around the tube if not occlusively sealed during its manufacture.

No. of Pages : 67 No. of Claims : 21

(12) PATENT APPLICATION PUBLICATION
(21) Application No.6582/DELNP/2014 A
(19) INDIA
(22) Date of filing of Application :05/08/2014
(43) Publication Date : 22/05/2015

(54) Title of the invention : CUP FOR AN ORTHOPAEDIC IMPLANT ORTHOPAEDIC IMPLANT COMPRISING SUCH A CUP AND METHOD FOR PRODUCING SUCH A CUP

(51) International classification :A61F2/30,A61F2/34
(31) Priority Document No :1251515
(32) Priority Date :20/02/2012
(33) Name of priority country :France
(86) International Application No :PCT/FR2013/050335
Filing Date :19/02/2013
(87) International Publication No :WO 2013/124576
(61) Patent of Addition to Application Number :NA
Filing Date :NA
(62) Divisional to Application Number :NA
Filing Date :NA

(71)**Name of Applicant :**
1)GALACTIC
Address of Applicant :54 Impasse des Lilas F 30650 Rochefort du Gard France
(72)**Name of Inventor :**
1)MOREAU Pierre Etienne
2)LORIOT DE ROUVRAY Thibault
3)BROSSET Thomas
4)DUMAS Julien
5)DELOBELLE Jean Michel
6)PRUDENT Henri Paul
7)BATAILLE Jean Fran§ois
8)BLANADET Bertrand

(57) Abstract :
This cup (2) has an internal cavity (4) for an articulation member (14) and an external metal layer (10) consisting of a portion of spheroid. The external layer (10) comprises networks (20) of meshes (22) with nodes (24) and struts (25 26). The struts (25 26) comprise so called tapered struts (26) which each have a tapered design. The tapered struts (26) are arranged such that the tapered shapes are positioned in a uniform manner.

No. of Pages : 19 No. of Claims : 16

(12) PATENT APPLICATION PUBLICATION
(21) Application No.6684/DELNP/2014 A
(19) INDIA
(22) Date of filing of Application :08/08/2014
(43) Publication Date : 22/05/2015

(54) Title of the invention : METHODS NETWORK NODES AND USER EQUIPMENTS IN A WIRELESS NETWORK FOR COMMUNICATING AN EPDCCH

(51) International classification :H04W72/04
(31) Priority Document No :61/707555
(32) Priority Date :28/09/2012
(33) Name of priority country :U.S.A.
(86) International Application No :PCT/SE2013/050340
Filing Date :27/03/2013
(87) International Publication No :WO 2014/051487
(61) Patent of Addition to Application Number :NA
Filing Date :NA
(62) Divisional to Application Number :NA
Filing Date :NA

(71)**Name of Applicant :**
1)TELEFONAKTIEBOLAGET L M ERICSSON (PUBL)
Address of Applicant :SE 164 83 Stockholm Sweden
(72)**Name of Inventor :**
1)FRENNE Mattias
2)ERIKSSON Erik
3)HAMMARWALL David
4)J–NGREN George

(57) Abstract :
A method performed by a network node of a wireless communication network is provided for communicating an enhanced Physical Downlink Control Channel ePDCCH to a user equipment UE. The method comprises transmitting (606) a configuration message to the UE. The configuration message comprises an indication of a first mapping of the ePDCCH to resource elements belonging to a first ePDCCH set where the resource elements of the first ePDCCH set are different from resource elements used for a first type of signal. The method further comprises an indication of a second mapping of the ePDCCH to resource elements belonging to a second ePDCCH set where the resource elements of the second ePDCCH set are different from resource elements used for a second type of signal thereby enabling dynamically mapping ePDCCH to the resource elements of the first ePDCCH set or the second ePDCCH set. Further methods UEs and computer programs are provided for communicating an ePDCCH between a network node and a UE.

No. of Pages : 50 No. of Claims : 36

(12) PATENT APPLICATION PUBLICATION
(21) Application No.6672/DELNP/2014 A
(19) INDIA
(22) Date of filing of Application :08/08/2014
(43) Publication Date : 22/05/2015

(54) Title of the invention : POWER SUPPLY NETWORK CONNECTED TO A TRANSPORTATION SYSTEM

(51) International classification :H02J3/00,H02J3/32
(31) Priority Document No :12290186.1
(32) Priority Date :05/06/2012
(33) Name of priority country :EPO
(86) International Application No :PCT/EP2013/058167
Filing Date :19/04/2013
(87) International Publication No :WO 2013/182343
(61) Patent of Addition to Application Number :NA
Filing Date :NA
(62) Divisional to Application Number :NA
Filing Date :NA

(71)**Name of Applicant :**
1)SIEMENS S.A.S.
Address of Applicant :9 Boulevard Finot F 93200 St. Denis France
(72)**Name of Inventor :**
1)CHATTOT Eric
2)CLOUTOT Laurent
3)CORNETET Valrie
4)URIEN Nicolas

(57) Abstract :
The present invention relates to a power supply network including at least one connection point (PCO) for connection to an upstream electrical network (REA) supplying operating power (Pf) to at least one input of a first power supply network (RE1) for supplying power to an electrically propelled transportation system (ST) such as a trolley tramway subway train or other forms of transportation wherein said first electrical network (RE1) has peak power fluctuations in accordance with the variable energy needs depending on the traffic associated with the transportation system characterized in that: the first electrical network (RE1) comprises at least one power output (SP) capable of distributing energy in particular energy recovered from the transportation system (ST) and the upstream electrical network (REA) to at least one second electrical network (RE2) for supplying power to power consumption points (Sc); at least one supervising unit (UC) monitors the energy distribution of said power output (SP) when at least the peak power required by the first transportation system (ST) is lower than the operating power (Pf) available upstream.

No. of Pages : 18 No. of Claims : 12

(12) PATENT APPLICATION PUBLICATION
(21) Application No.6673/DELNP/2014 A
(19) INDIA
(22) Date of filing of Application :08/08/2014
(43) Publication Date : 22/05/2015

(54) Title of the invention : FEEDING DEVICE FOR A DOWNHOLE TOOL AND METHOD FOR AXIAL FEEDING OF A DOWNHOLE TOOL

(51) International classification :E21B4/18,E21B23/00
(31) Priority Document No :20120216
(32) Priority Date :28/02/2012
(33) Name of priority country :Norway
(86) International Application No :PCT/NO2013/050040
Filing Date :28/02/2013
(87) International Publication No :WO 2013/129938
(61) Patent of Addition to Application Number :NA
Filing Date :NA
(62) Divisional to Application Number :NA
Filing Date :NA

(71)**Name of Applicant :**
1)WEST PRODUCTION TECHNOLOGY AS
Address of Applicant :Postboks 374 N 4067 Stavanger Norway
(72)**Name of Inventor :**
1)SKJ†RSETH Odd B.
2)VESHOVDE Jarle

(57) Abstract :
A feeding device (3) for a rotatable downhole tool (5) is described the feeding device (3) being provided with several feeding wheels (32) lying in a plane which is slanted relative to a plane which is perpendicular to the centre axis of the downhole tool (5). A method of feeding a downhole tool (5) axially by the use of the feeding device when working a portion of a surrounding pipe body (12) is described as well.

No. of Pages : 12 No. of Claims : 9

(12) PATENT APPLICATION PUBLICATION
(19) INDIA
(22) Date of filing of Application :08/08/2014
(21) Application No.6674/DELNP/2014 A
(43) Publication Date : 22/05/2015

(54) Title of the invention : PROCESS AND APPARATUS FOR PRODUCING DIESEL FROM A HYDROCARBON STREAM

(51) International classification :C10G65/12,C10G69/02
(31) Priority Document No :13/433726
(32) Priority Date :29/03/2012
(33) Name of priority country :U.S.A.
(86) International Application No :PCT/US2013/030808
Filing Date :13/03/2013
(87) International Publication No :WO 2013/148194
(61) Patent of Addition to Application Number :NA
Filing Date :NA
(62) Divisional to Application Number :NA
Filing Date :NA

(71)**Name of Applicant :**
1)UOP LLC
Address of Applicant :25 East Algonquin Road P. O. Box 5017 Des Plaines Illinois 60017 5017 U.S.A.
(72)**Name of Inventor :**
1)ZIMMERMAN Paul R.
2)KOKAYEFF Peter

(57) Abstract :
A process and apparatus are disclosed for hydrotreating a hydrocarbon feed in a hydrotreating unit and hydrocracking a second hydrocarbon stream in a hydrocracking unit. The hydrocracking unit and the hydrotreating unit may share the same recycle gas compressor. A make up hydrogen stream may also be compressed in the recycle gas compressor. A hydrocracking separator separates recycle gas and hydrocarbons from the hydrocracking unit to be processed with effluent from the hydrotreating unit.

No. of Pages : 27 No. of Claims : 10

(12) PATENT APPLICATION PUBLICATION
(19) INDIA
(22) Date of filing of Application :08/08/2014
(21) Application No.6675/DELNP/2014 A
(43) Publication Date : 22/05/2015

(54) Title of the invention : METHOD OF CLASSIFICATION OF ORGANS FROM A TOMOGRAPHIC IMAGE

(51) International classification :G06T7/00,A61B6/03,G06T11/00
(31) Priority Document No :NA
(32) Priority Date :NA
(33) Name of priority country :NA
(86) International Application No :PCT/SE2012/050178
Filing Date :17/02/2012
(87) International Publication No :WO 2013/122523
(61) Patent of Addition to Application Number :NA
Filing Date :NA
(62) Divisional to Application Number :NA
Filing Date :NA

(71)**Name of Applicant :**
1)ADVANCED MR ANALYTICS AB
Address of Applicant :c/o Magnus Borga Duvgatan 4 S 582 39 Linkping Sweden
(72)**Name of Inventor :**
1)DAHLQVIST LEINHARD Olof
2)BORGA Magnus

(57) Abstract :
The present invention relates to a method for classification of an organ in a tomographic image. The method comprises the steps of receiving (102) a 3 dimensional anatomical tomographic target image comprising a water image data set and a fat image data set each with a plurality of volume elements providing (104) a prototype image comprising a 3 dimensional image data set with a plurality of volume elements wherein a sub set of the volume elements are given an organ label transforming (106) the prototype image by applying a deformation field onto the volume elements of the prototype image such that each labeled volume element for a current organ is determined to be equivalent to a location for a volume element in a corresponding organ in the target image and transferring (108) the labels of the labeled volume elements of the prototype image to corresponding volume elements of the target image.

No. of Pages : 29 No. of Claims : 16

(12) PATENT APPLICATION PUBLICATION
(19) INDIA
(22) Date of filing of Application :05/08/2014
(21) Application No.6564/DELNP/2014 A
(43) Publication Date : 22/05/2015

(54) Title of the invention : PROTOCOL FOR COMMUNICATIONS BETWEEN A RADIO FREQUENCY IDENTIFICATION (RFID) TAG AND A CONNECTED DEVICE AND RELATED SYSTEMS AND METHODS

(51) International classification :H04Q1/02,G06K7/10,H04B5/00
(31) Priority Document No :13/363851
(32) Priority Date :01/02/2012
(33) Name of priority country :U.S.A.
(86) International Application No :PCT/US2013/023975
Filing Date :31/01/2013
(87) International Publication No:WO 2013/116417
(61) Patent of Addition to Application Number :NA
Filing Date :NA
(62) Divisional to Application Number :NA
Filing Date :NA

(71)**Name of Applicant :**
1)CORNING INCORPORATED
Address of Applicant :1 Riverfront Plaza Corning New York 14831 U.S.A.
(72)**Name of Inventor :**
1)DOWNIE John David
2)SUTHERLAND James Scott
3)WAGNER Richard Edward
4)WEBB Dale Alan
5)WHITING Matthew Scott

(57) Abstract :
Protocols systems and methods are disclosed for at least one RFID tag and a device to communicate with each other using direct connections wherein the at least one RFID tag and the device are configured to mate and directly exchange identification information. A message comprising a tag identification may be sent directly from the RFID tag to the device and the RFID tag may receive a first acknowledgement from the device if the first tag identification was correctly received. A connection may be detected between the RFID tag and the device prior to directly exchanging information. The exchange of information may include sending data from the device to the RFID tag.

No. of Pages : 71 No. of Claims : 21

(12) PATENT APPLICATION PUBLICATION
(21) Application No.6565/DELNP/2014 A
(19) INDIA
(22) Date of filing of Application :05/08/2014
(43) Publication Date : 22/05/2015

(54) Title of the invention : RADIO FREQUENCY IDENTIFICATION (RFID) CONNECTED TAG COMMUNICATIONS PROTOCOL AND RELATED SYSTEMS AND METHODS

(51) International classification :H04Q1/02,G06K7/10,H04B5/00
(31) Priority Document No :13/363808
(32) Priority Date :01/02/2012
(33) Name of priority country :U.S.A.
(86) International Application No :PCT/US2013/023971
Filing Date :31/01/2013
(87) International Publication No:WO 2013/116414
(61) Patent of Addition to Application Number :NA
Filing Date :NA
(62) Divisional to Application Number :NA
Filing Date :NA

(71)**Name of Applicant :**
1)CORNING INCORPORATED
Address of Applicant :1 Riverfront Plaza Corning New York 14831 U.S.A.
2)WHITING Matthew Scott
(72)**Name of Inventor :**
1)DOWNIE John David
2)NEDERLOF Leo
3)SUTHERLAND James Scott
4)WAGNER Richard Edward
5)WEBB Dale Alan

(57) Abstract :
Protocols systems and methods are disclosed for two or more RFID tags to communicate with each other using direct connections wherein the two or more RFID tags are configured to mate and directly exchange identification information. A disclosed method includes detecting that a first RFID tag is connected to a second RFID tag. A first message comprising a first tag identification is sent directly from the first RFID tag to the second RFID tag and the first RFID tag receives a first acknowledgement from the second RFID tag if the first tag identification was correctly received. A second message comprising a second tag identification may be sent directly from the second RFID tag to the first RFID tag and a second acknowledgement may be received from the first RFID tag if the second tag identification was correctly received

No. of Pages : 80 No. of Claims : 49

(12) PATENT APPLICATION PUBLICATION
(21) Application No.6566/DELNP/2014 A
(19) INDIA
(22) Date of filing of Application :05/08/2014
(43) Publication Date : 22/05/2015

(54) Title of the invention : COMMUNICATIONS BETWEEN MULTIPLE RADIO FREQUENCY IDENTIFICATION (RFID) CONNECTED TAGS AND ONE OR MORE DEVICES AND RELATED SYSTEMS AND METHODS

(51) International classification :H04Q1/02,G06K7/10,H04B5/00
(31) Priority Document No :13/363890
(32) Priority Date :01/02/2012
(33) Name of priority country :U.S.A.
(86) International Application No :PCT/US2013/023977
Filing Date :31/01/2013
(87) International Publication No:WO 2013/116418
(61) Patent of Addition to Application Number :NA
Filing Date :NA
(62) Divisional to Application Number :NA
Filing Date :NA

(71)**Name of Applicant :**
1)CORNING INCORPORATED
Address of Applicant :1 Riverfront Plaza Corning New York 14831 U.S.A.
(72)**Name of Inventor :**
1)DOWNIE John David
2)SUTHERLAND James Scott
3)WAGNER Richard Edward
4)WEBB Dale Alan
5)WHITING Matthew Scott

(57) Abstract :
Protocols systems and methods are disclosed for two or more RFID tags to communicate with each other and a device using direct connections. A disclosed system includes a first RFID tag a second RFID tag and a device. The first and second RFID tags are configured to mate to each other and directly exchange information. The second RFID tag is further configured to directly exchange information with the device such that information received directly at the second RFID tag from the first RFID tag may then be directly exchanged with the device. The first RFID tag may send a first tag identification directly from the first RFID tag to the second RFID tag. The second RFID tag may then send a first acknowledgement to the first RFID tag if the first tag identification was correctlyreceived by the second RFID tag.

No. of Pages : 72 No. of Claims : 27

(12) PATENT APPLICATION PUBLICATION
(19) INDIA
(22) Date of filing of Application :08/08/2014
(21) Application No.6679/DELNP/2014 A
(43) Publication Date : 22/05/2015

(54) Title of the invention : METHOD FOR THE MANUFACTURE OF CONCENTRATED AQUEOUS SOLUTIONS OF ALKALI METAL SALT OF CARBOXYMETHYL FRUCTAN

(51) International classification :C08B37/00,C08L5/00,C02F5/10
(31) Priority Document No :12154485.2
(32) Priority Date :08/02/2012
(33) Name of priority country :EPO
(86) International Application No :PCT/EP2013/052482
Filing Date :07/02/2013
(87) International Publication No:WO 2013/117672
(61) Patent of Addition to Application Number :NA
Filing Date :NA
(62) Divisional to Application Number :NA
Filing Date :NA

(71)**Name of Applicant :**
1)ITALMATCH CHEMICALS SPA
Address of Applicant :Via Pietro Chiesa 7/13 Genova Italy
(72)**Name of Inventor :**
1)NOTT‰ Patrick Pierre
2)DEVAUX Albert Firmin

(57) Abstract :
The present invention is directed to a new method for the manufacture of aqueous solutions of alkali metal salt of carboxymethyl fructan. More specifically the present invention relates to a new method for the manufacture of aqueous solutions comprising at least 20% by weight of alkali metal salt of carboxymethyl fructan having a degree of carboxymethyl substitution of at least 1.2.

No. of Pages : 20 No. of Claims : 13

(12) PATENT APPLICATION PUBLICATION
(19) INDIA
(22) Date of filing of Application :08/08/2014
(21) Application No.6680/DELNP/2014 A
(43) Publication Date : 22/05/2015

(54) Title of the invention : CONCRETE PISTON STRUCTURE PUMPING SYSTEM AND CONCRETE PUMP

(51) International classification	:F04B53/14,F04B53/02,F04B15/02
(31) Priority Document No	:201210027624.3
(32) Priority Date	:08/02/2012
(33) Name of priority country	:China
(86) International Application No	:PCT/CN2012/074050
Filing Date	:14/04/2012
(87) International Publication No	:WO 2013/117047
(61) Patent of Addition to Application Number	:NA
Filing Date	:NA
(62) Divisional to Application Number	:NA
Filing Date	:NA

(71)**Name of Applicant :**
1)HUNAN SANY INTELLIGENT CONTROL EQUIPMENT CO. LTD
Address of Applicant :Sany Industry Town Economic and Technological Development Zone Changsha Hunan 410100 China
2)SANY HEAVY INDUSTRY CO. LTD
(72)**Name of Inventor :**
1)YI Xiaogang
2)OU Yaohui
3)WEN Lei

(57) Abstract :
A concrete piston structure a pumping system comprising the concrete piston structure and a concrete pump. The concrete piston structure is arranged in a transport cylinder of the pumping system comprising a piston connecting rod (1) and a piston body (2) connected thereto. A flexible sealing component (4) is arranged in the circumferential direction on the exterior of the piston body (2). A first sealing component is also arranged in the circumferential direction on the exterior of the piston body (2). The first sealing component is arranged at one side of the flexible sealing component (4) in proximity to a transportation medium. The first sealing component comprises a filter ring (31) arranged in the circumferential direction on the exterior of the piston body (2) and matches the inner wall of the transport cylinder. The concrete pump comprises a hopper and is provided with two transport cylinders where the two transport cylinders are alternately in communication with the hopper. Under the premise of ensured sealing effect the concrete piston structure improves the service life of the sealing structure.

No. of Pages : 26 No. of Claims : 17

(12) PATENT APPLICATION PUBLICATION
(21) Application No.6571/DELNP/2014 A
(19) INDIA
(22) Date of filing of Application :05/08/2014
(43) Publication Date : 22/05/2015

(54) Title of the invention : GLASS ARTICLE PROVIDED WITH PHOTOCATALYST FILM

(51) International classification :C03C17/23,B01J21/08,B01J35/02
(31) Priority Document No :2012021905
(32) Priority Date :03/02/2012
(33) Name of priority country :Japan
(86) International Application No :PCT/JP2013/000575
Filing Date :01/02/2013
(87) International Publication No :WO 2013/114894
(61) Patent of Addition to Application Number :NA
Filing Date :NA
(62) Divisional to Application Number :NA
Filing Date :NA

(71)**Name of Applicant :**
1)NIPPON SHEET GLASS COMPANY LIMITED
Address of Applicant :5 27 Mita 3 chome Minato ku Tokyo 1086321 Japan
(72)**Name of Inventor :**
1)YABUTA Takeshi
2)KONDO Fumiyoshi
3)KAWAZU Mitsuhiro

(57) Abstract :
The present invention provides a glass article which is provided with a photocatalyst film (1) that contains silicon oxide particles (6) and titanium oxide particles (5) and which has improved reflection suppressing function and further increased transmittance while maintaining the film strength and photocatalytic function of the photocatalyst film (1). The photocatalyst film (1) contains 72 79% by mass of the silicon oxide particles 13 18% by mass of the titanium oxide particles and 8 14% by mass of a binder component that is mainly composed of silicon oxide respectively relative to the total mass of the silicon oxide particles (6) the titanium oxide particles (5) and the binder component. The silicon oxide particles have an average particle diameter of 30 200 nm; the titanium oxide particles have an average particle diameter of 5 20 nm; and the average particle diameter of the silicon oxide particles is not less than 5 times the average particle diameter of the titanium oxide particles. If T is the film thickness of the photocatalyst film 80% or more of the titanium oxide particles are concentrated in a region within 0.6T from the surface of a glass plate (2).

No. of Pages : 27 No. of Claims : 3

(12) PATENT APPLICATION PUBLICATION
(19) INDIA
(22) Date of filing of Application :05/08/2014
(21) Application No.6572/DELNP/2014 A
(43) Publication Date : 22/05/2015

(54) Title of the invention : HIGH SPEED SECURITY INSPECTION SYSTEM

(51) International classification :G01N23/02
(31) Priority Document No :61/596648
(32) Priority Date :08/02/2012
(33) Name of priority country :U.S.A.
(86) International Application No :PCT/US2013/023676
Filing Date :29/01/2013
(87) International Publication No :WO 2013/119423
(61) Patent of Addition to Application Number :NA
Filing Date :NA
(62) Divisional to Application Number :NA
Filing Date :NA

(71)**Name of Applicant :**
1)RAPISCAN SYSTEMS INC.
Address of Applicant :2805 Columbia Street Torrance CA 90503 U.S.A.
(72)**Name of Inventor :**
1)MORTON Edward James

(57) Abstract :
The present specification discloses a high speed scanning system for scanning cargo carried by rail. The system uses of a two dimensional X ray sensor array with in one embodiment a cone beam X ray geometry. The pulse rate of X ray source is modulated based on the speed of the moving cargo to allow a distance travelled by the cargo between X ray pulses to be equal to the width of the detector for a single energy source and to half the width of the detector for a dual energy source. This ensures precise timing between the X ray exposure and the speed of the passing object and thus accurate scanning of cargo even at high speeds.

No. of Pages : 32 No. of Claims : 20

(12) PATENT APPLICATION PUBLICATION
(21) Application No.6691/DELNP/2014 A
(19) INDIA
(22) Date of filing of Application :08/08/2014
(43) Publication Date : 22/05/2015

(54) Title of the invention : A SAFETY CONNECTING DEVICE IN PARTICULAR FOR PIPING AN END COUPLER FOR SUCH DEVICE AND A METHOD FOR MANUFACTURING A NUT THEREFOR

(51) International classification :F16L19/00,F16L25/06,F16L37/084
(31) Priority Document No :1252082
(32) Priority Date :07/03/2012
(33) Name of priority country :France
(86) International Application No :PCT/EP2013/054658
Filing Date :07/03/2013
(87) International Publication No :WO 2013/132030
(61) Patent of Addition to Application Number :NA
Filing Date :NA
(62) Divisional to Application Number :NA
Filing Date :NA

(71)**Name of Applicant :**
1)JPB SYSTEME
Address of Applicant :Alle des Pleus ZAC de Tuboeuf F 77170 Brie Comte Robert France
(72)**Name of Inventor :**
1)MARC Damien
2)LE GOUILL Gilles
3)ROULAND Jean Philippe

(57) Abstract :
The device connects a first end coupler (1) with a second end coupler (2) in particular of a piping. A nut (15) is provided with a threaded bore (17) in which the first end coupler (1) is screwed along a longitudinal axis (X). In a tightening position the first end coupler (1) is in axial stress with a second end coupler (2) accommodated in the nut. Anti rotation means are provided between the nut (15 115) and at least one (2) of the end couplers to prevent relative rotation except when a torque exceeding a predetermined threshold is applied thereto. The anti rotation means consist of at least one tab (21) made in the material of the nut (15) to lockingly interfere with substantially planar faces formed on the second end coupler (2).

No. of Pages : 27 No. of Claims : 19

(12) PATENT APPLICATION PUBLICATION
(19) INDIA
(22) Date of filing of Application :08/08/2014
(21) Application No.6692/DELNP/2014 A
(43) Publication Date : 22/05/2015

(54) Title of the invention : SORTING FLOW CYTOMETER

(51) International classification :G01N15/14,G01N15/10
(31) Priority Document No :61/597022
(32) Priority Date :09/02/2012
(33) Name of priority country :U.S.A.
(86) International Application No :PCT/US2013/025308
Filing Date :08/02/2013
(87) International Publication No :WO 2013/119924
(61) Patent of Addition to Application Number :NA
Filing Date :NA
(62) Divisional to Application Number :NA
Filing Date :NA

(71)**Name of Applicant :**
1)BECKMAN COULTER INC.
Address of Applicant :250 S. Kraemer Boulevard Brea CA 92821 U.S.A.
(72)**Name of Inventor :**
1)THRASHER Thomas L.
2)BAILEY Bruce G.
3)VON SEGGERN Eric
4)DEGEAL Jeffrey W.

(57) Abstract :
A sorting flow cytometer identifies an undesirable drop charge sequence that is preassigned to adjacent drops before the drops have separated from a fluid stream. An example of an undesirable drop charge sequence is a sequence of adjacent drops that are charged with sufficiently high opposing charges that after the drops are formed would result in merging of the adjacent drops. The sorting flow cytometer adjusts the assignment of drop charges to avoid the undesired drop charge sequence.

No. of Pages : 44 No. of Claims : 39

(12) PATENT APPLICATION PUBLICATION
(19) INDIA
(22) Date of filing of Application :05/08/2014
(21) Application No.6578/DELNP/2014 A
(43) Publication Date : 22/05/2015

(54) Title of the invention : ADDITIVES FOR IMPROVING THE RESISTANCE TO WEAR AND TO LACQUERING OF DIESEL OR BIODIESEL FUELS

(51) International classification :C10L10/04,C10L10/08,C10L1/19
(31) Priority Document No :1251512
(32) Priority Date :17/02/2012
(33) Name of priority country :France
(86) International Application No :PCT/EP2013/053049
Filing Date :15/02/2013
(87) International Publication No :WO 2013/120985
(61) Patent of Addition to Application Number :NA
Filing Date :NA
(62) Divisional to Application Number :NA
Filing Date :NA

(71)**Name of Applicant :**
1)TOTAL MARKETING SERVICES
Address of Applicant :24 Cours Michelet F 92800 Puteaux France
(72)**Name of Inventor :**
1)ARONDEL Mathieu
2)DUBOIS Thomas
3)GERMANAUD Laurent
4)RODESCHINI Hl¨ne

(57) Abstract :
The present invention relates to novel wear resistance additives for diesel or biodiesel fuels having a sulphur content of less than or equal to 500 ppm by weight. These novel additives also improve the resistance to lacquering of higher quality diesel or biodiesel fuels having a sulphur content of less than or equal to 500 ppm by weight.

No. of Pages : 38 No. of Claims : 13

(12) PATENT APPLICATION PUBLICATION
(21) Application No.6579/DELNP/2014 A
(19) INDIA
(22) Date of filing of Application :05/08/2014
(43) Publication Date : 22/05/2015

(54) Title of the invention : AIR CONDITIONER

(51) International classification :F24F1/32,F24F1/28
(31) Priority Document No :NA
(32) Priority Date :NA
(33) Name of priority country :NA
(86) International Application No :PCT/JP2012/000848
Filing Date :09/02/2012
(87) International Publication No :WO 2013/118174
(61) Patent of Addition to Application Number :NA
Filing Date :NA
(62) Divisional to Application Number :NA
Filing Date :NA

(71)**Name of Applicant :**
1)HITACHI APPLIANCESINC.
Address of Applicant :16 1 Kaigan 1 chome Minato ku Tokyo 1050022 Japan
(72)**Name of Inventor :**
1)NAITO Koji
2)YOSHIDA Yasutaka
3)URATA Kazumoto
4)KAWAGUCHI Hiroyuki
5)FURUTA Yuki
6)TANI Kazuhiko

(57) Abstract :
Provided is an air conditioner which comprises multiple outdoor units the air conditioner being configured so that with the use of a low cost configuration required refrigeration machine oil is supplied to all the outdoor units through refrigerant piping and so that the air conditioner has increased reliability. An air conditioner is provided with multiple indoor units and with four outdoor units which are connected to the multiple indoor units through refrigerant piping. A line of first refrigerant piping leading from the multiple indoor units is branched into two lines of second refrigerant piping each of the two lines of second refrigerant piping is branched into two lines of third refrigerant piping and the four lines of third refrigerant piping are respectively connected to the four outdoor units.

No. of Pages : 28 No. of Claims : 6

(12) PATENT APPLICATION PUBLICATION
(19) INDIA
(22) Date of filing of Application :08/08/2014
(21) Application No.6695/DELNP/2014 A
(43) Publication Date : 22/05/2015

(54) Title of the invention : PROCESS AND APPARATUS FOR PRODUCING DIESEL FROM A HYDROCARBON STREAM

(51) International classification :C10G65/00,C10G45/00,C10L1/08
(31) Priority Document No :13/433679
(32) Priority Date :29/03/2012
(33) Name of priority country :U.S.A.
(86) International Application No :PCT/US2013/030690
Filing Date :13/03/2013
(87) International Publication No :WO 2013/148175
(61) Patent of Addition to Application Number :NA
Filing Date :NA
(62) Divisional to Application Number :NA
Filing Date :NA

(71)**Name of Applicant :**
1)UOP LLC
Address of Applicant :25 East Algonquin Road P. O. Box 5017 Des Plaines Illinois 60017 5017 U.S.A.
(72)**Name of Inventor :**
1)ZIMMERMAN Paul R.
2)KOKAYEFF Peter

(57) Abstract :
A process and apparatus are disclosed for hydrotreating a hydrocarbon feed in a hydrotreating unit and hydrocracking a second hydrocarbon stream in a hydrocracking unit. The hydrocracking unit and the hydrotreating unit may share the same recycle gas compressor. A make up hydrogen stream may also be compressed in the recycle gas compressor. The second hydrocarbon stream may be a diesel stream from the hydrotreating unit. The diesel stream may be a diesel and heavier stream from a bottom of a hydrotreating fractionation column.

No. of Pages : 27 No. of Claims : 10

(12) PATENT APPLICATION PUBLICATION
(19) INDIA
(22) Date of filing of Application :08/08/2014
(21) Application No.6697/DELNP/2014 A
(43) Publication Date : 22/05/2015

(54) Title of the invention : FUEL SAVING SYSTEM THAT FACILITATES VEHICLE RE STARTS WITH THE ENGINE OFF

(51) International classification :B60K6/12,B60K6/28,F15B1/033
(31) Priority Document No :61/585422
(32) Priority Date :11/01/2012
(33) Name of priority country :U.S.A.
(86) International Application No :PCT/CA2013/000025
Filing Date :11/01/2013
(87) International Publication No :WO 2013/104063
(61) Patent of Addition to Application Number :NA
Filing Date :NA
(62) Divisional to Application Number :NA
Filing Date :NA

(71)**Name of Applicant :**
1)DEVELOPPEMENT EFFENCO INC.
Address of Applicant :3700 rue St Patrick Bureau 316 Montreal Qubec H4E 1A2 Canada
(72)**Name of Inventor :**
1)ARSENAULT David
2)LACROIX Benoit
3)FOUQUET Dany

(57) Abstract :
A fuel saving system for a vehicle powered by an internal combustion engine and having a hydraulically activated automatic transmission. The system includes a hydraulic pump able to supply pressurized transmission fluid to the automatic transmission an energy storage device and at least one motor powered by the energy storage device including a motor that is mechanically connected to the hydraulic pump and a motor that is coupled to the engine. The system also includes a controller that is responsive to one or more operating conditions to turn off the engine when the vehicle is stopped and to use the motor that is mechanically connected to the hydraulic pump so as to activate the pump to supply sufficient power to the transmission to maintain engagement of the transmission in a driving gear. The controller is also responsive to one or more operating conditions to activate the motor that is coupled to the engine so as to restart the engine with the transmission engaged in a driving gear.

No. of Pages : 33 No. of Claims : 19

(12) PATENT APPLICATION PUBLICATION
(19) INDIA
(22) Date of filing of Application :08/08/2014
(21) Application No.6699/DELNP/2014 A
(43) Publication Date : 22/05/2015

(54) Title of the invention : VAPORIZATION OF LIQUID HALOGEN BY CONTACT WITH A PREHEATED GAS

(51) International classification :C07C1/30
(31) Priority Document No :61/584754
(32) Priority Date :09/01/2012
(33) Name of priority country :U.S.A.
(86) International Application No :PCT/US2013/020644
Filing Date :08/01/2013
(87) International Publication No :WO 2013/106311
(61) Patent of Addition to Application Number :NA
Filing Date :NA
(62) Divisional to Application Number :NA
Filing Date :NA

(71)**Name of Applicant :**
1)MARATHON GTF TECHNOLOGY LTD.
Address of Applicant :5555 San Felipe Houston Texas 77056 2799 U.S.A.
(72)**Name of Inventor :**
1)KURUKCHI Sabah A.
2)MOODLEY Anand
3)LIU Yijun
4)GONDOLFE Joseph M.
5)WAYCUILIS John J.

(57) Abstract :
A method is provided for vaporizing a liquid elemental halogen. A heating gas is preheated in the absence of halogen to a preheat temperature which results in a preheated heating gas. The preheated heating gas is directly contacted with a feed of a liquid elemental halogen and heats the feed to a vaporizing temperature sufficient to vaporize at least a portion of the feed to a quantity of an elemental halogen vapor. A gas mixture results which includes the heating gas and the quantity of the elemental halogen vapor.

No. of Pages : 48 No. of Claims : 29

(12) PATENT APPLICATION PUBLICATION
(19) INDIA
(22) Date of filing of Application :06/08/2014
(21) Application No.6600/DELNP/2014 A
(43) Publication Date : 22/05/2015

(54) Title of the invention : FUNCTIONALIZED POLYAMINES FOR CLAY MITIGATION

(51) International classification :C04B20/02,C04B24/12,C04B24/26
(31) Priority Document No :61/601730
(32) Priority Date :22/02/2012
(33) Name of priority country :U.S.A.
(86) International Application No :PCT/EP2012/058830
Filing Date :11/05/2012
(87) International Publication No :WO 2013/124003
(61) Patent of Addition to Application Number :NA
Filing Date :NA
(62) Divisional to Application Number :NA
Filing Date :NA

(71)**Name of Applicant :**
1)W R GRACE & CO. CONN
Address of Applicant :7500 Grace Drive Columbia Maryland 21044 U.S.A.
2)SNF S.A.S.
(72)**Name of Inventor :**
1)KUO Lawrence L.
2)FAVERO Cedrick
3)ROUX Christophe
4)TREGGER Nathan A.

(57) Abstract :
The present invention provides methods and compositions for treating clay bearing aggregates particularly those used for construction purposes whereby inclusion of fines is maximized due to minimization of clay washing which tends to remove such fines and whereby performance of the aggregate containing construction material is enhanced. Exemplary methods comprise introducing to clay a water soluble functionalized polyamine comprising a water soluble polyamine formed by reacting an amine compound with an epoxy compound the polyamine thus reacted being functionalized through the use of certain halide sulfate or epoxy compounds.

No. of Pages : 39 No. of Claims : 35

(12) PATENT APPLICATION PUBLICATION
(19) INDIA
(22) Date of filing of Application :06/08/2014
(21) Application No.6601/DELNP/2014 A
(43) Publication Date : 22/05/2015

(54) Title of the invention : PROCESS FOR THE PRODUCTION OF HCFC 1233ZD

(51) International classification :C07C17/20,C07C21/18,C07B61/00
(31) Priority Document No :61/598938
(32) Priority Date :15/02/2012
(33) Name of priority country :U.S.A.
(86) International Application No :PCT/US2013/025523
Filing Date :11/02/2013
(87) International Publication No :WO 2013/122860
(61) Patent of Addition to Application Number :NA
Filing Date :NA
(62) Divisional to Application Number :NA
Filing Date :NA

(71)**Name of Applicant :**
1)HONEYWELL INTERNATIONAL INC.
Address of Applicant :Patent Services M/S AB/2B 101 Columbia Road P. O. Box 2245 Morristown New Jersey 07962 2245 U.S.A.
(72)**Name of Inventor :**
1)COTTRELL Stephen A.
2)TUNG Hsueh Sung
3)POKROVSKI Konstantin A.
4)WANG Haiyou
5)MERKEL Daniel C.

(57) Abstract :
A process for the manufacture of 1 chloro 3 3 3 trifluoropropene (HCFC 1233zd) at commercial scale from the reaction of HCC 240 and HF is disclosed. In one embodiment HCC 240fa and HF are fed to a reactor operating at high pressure. Several different reactor designs useful in this process include; a stirred tank reactor (batch and/or continuous flow); a plug flow reactor; a static mixer used as a reactor; at least one of the above reactors operating at high pressure; optionally combined with a distillation column running at a lower pressure; and combinations of the above; and/or with a distillation column. The resulting product stream consisting of 1233zd HCl HF and other byproducts is partially condensed to recover HF by phase separation. The recovered HF phase is recycled to the reactor. The HCl is scrubbed from the vapor stream and recovered as an aqueous solution. The remaining organic components including the desired HCFC 1233zd are scrubbed dried and distilled to meet commercial product specifications.

No. of Pages : 14 No. of Claims : 10

(12) PATENT APPLICATION PUBLICATION
(21) Application No.6701/DELNP/2014 A
(19) INDIA
(22) Date of filing of Application :08/08/2014
(43) Publication Date : 22/05/2015

(54) Title of the invention : ABSORBER AND ABSORBENT ARTICLE USING THE SAME

(51) International classification :A61L15/46,A61L15/60
(31) Priority Document No :2012038019
(32) Priority Date :23/02/2012
(33) Name of priority country :Japan
(86) International Application No :PCT/JP2013/000942
Filing Date :20/02/2013
(87) International Publication No :WO 2013/125216
(61) Patent of Addition to Application Number :NA
Filing Date :NA
(62) Divisional to Application Number :NA
Filing Date :NA

(71)**Name of Applicant :**
1)LIVEDO CORPORATION
Address of Applicant :45 2 Handaotsu Kanadacho Shikokuchuo shi Ehime 7990122 Japan
(72)**Name of Inventor :**
1)OTA Yoshihisa
2)NISHIDA Motoko
3)IKEUCHI Masatoshi

(57) Abstract :
To provide an absorbent body and an absorbent article having excellent deodorization effect. The present invention provides an absorber comprising a crosslinked polymer mainly composed of acrylic acid and having carboxyl groups thereof being at least partially neutralized as a water absorbent resin powder and an antibacterial cationic surfactant wherein the antibacterial cationic surfactant is a compound neutralized with an acid having an acid dissociation constant pKa in water at 25 degrees centigrade in a range from 3.0 to 5.5.

No. of Pages : 29 No. of Claims : 8

(12) PATENT APPLICATION PUBLICATION
(21) Application No.6702/DELNP/2014 A
(19) INDIA
(22) Date of filing of Application :08/08/2014
(43) Publication Date : 22/05/2015

(54) Title of the invention : PLANT FOR CRUSHING MINERAL MATERIALS

(51) International classification	:B02C4/02,B02C4/28,B02C23/12	(71)**Name of Applicant :**
(31) Priority Document No	:12/51159	**1)VICAT**
(32) Priority Date	:08/02/2012	Address of Applicant :Tour Manhattan 6 place de lIris F 92095 Paris la Defense France
(33) Name of priority country	:France	(72)**Name of Inventor :**
(86) International Application No	:PCT/FR2013/050259	**1)BOURGEOIS Marcel**
Filing Date	:07/02/2013	
(87) International Publication No	:WO 2013/117864	
(61) Patent of Addition to Application Number	:NA	
Filing Date	:NA	
(62) Divisional to Application Number	:NA	
Filing Date	:NA	

(57) Abstract :
The invention concerns a plant (50) for crushing mineral materials comprising: a hermetic enclosure (2); at least one press (30) housed inside the enclosure (2) arranged to crush the mineral materials; at least a first separator (42) housed inside the enclosure (2) arranged to separate: residual coarse particles from the roller press (30); and fine particles and intermediate particles from the roller press (30); a second separator (27) housed inside the enclosure (2) arranged to separate the fine particles from the intermediate particles; and suction means configured to extract only the fine particles via a first extraction duct (8).

No. of Pages : 20 No. of Claims : 14

(12) PATENT APPLICATION PUBLICATION
(19) INDIA
(22) Date of filing of Application :08/08/2014
(21) Application No.6703/DELNP/2014 A
(43) Publication Date : 22/05/2015

(54) Title of the invention : CONTROL DEVICE AND CONTROL METHOD FOR INTERNAL COMBUSTION ENGINE

(51) International classification :F02D41/14,F02D41/30
(31) Priority Document No :2012029515
(32) Priority Date :14/02/2012
(33) Name of priority country :Japan
(86) International Application No :PCT/IB2013/000214
Filing Date :11/02/2013
(87) International Publication No :WO 2013/121280
(61) Patent of Addition to Application Number :NA
Filing Date :NA
(62) Divisional to Application Number :NA
Filing Date :NA

(71)**Name of Applicant :**
1)TOYOTA JIDOSHA KABUSHIKI KAISHA
Address of Applicant :1 Toyota cho Toyota shi Aichi ken 471 8571 Japan
(72)**Name of Inventor :**
1)LEE Sunki
2)MIYANOO Yuji

(57) Abstract :
An ECU acquires a fluid temperature a coolant temperature and a soak time (step S11) and determines whether vapors have been produced in a fuel supply device on the basis of a vapor production prediction map (step S12). When the ECU determines that vapors have been produced in the fuel supply device the ECU reduces a feedback gain (step S13). Subsequently the ECU (50) predicts a vapor production time (step S14) and when the ECU determines that a vapor production end time has been reached (YES in step S15) executes normal feedback control (step S16).

No. of Pages : 29 No. of Claims : 5

(12) PATENT APPLICATION PUBLICATION
(19) INDIA
(22) Date of filing of Application :06/08/2014
(21) Application No.6605/DELNP/2014 A
(43) Publication Date : 22/05/2015

(54) Title of the invention : FILTER HOUSING AND FILTER UNIT

(51) International classification :F02M35/024,B01D46/00,B60T17/02
(31) Priority Document No :12501946
(32) Priority Date :01/03/2012
(33) Name of priority country :Sweden
(86) International Application No :PCT/SE2013/050163
Filing Date :25/02/2013
(87) International Publication No :WO 2013/129999
(61) Patent of Addition to Application Number :NA
Filing Date :NA
(62) Divisional to Application Number :NA
Filing Date :NA

(71)**Name of Applicant :**
1)SCANIA CV AB
Address of Applicant :S 151 87 Sdertlje Sweden
(72)**Name of Inventor :**
1)PETTERSSON Emil

(57) Abstract :
The invention relates to a filter housing (10) for a filter unit (50) with a substantially semicylindrical air filter (52) comprising an air inlet (20) and an engine air outlet (40). According to the invention the filter housing has an extra air outlet (36) and an air aperture (64) to the extra air outlet (36) situated between the filter unit (50) and the engine air outlet (40) which aperture (64) extends along a periphery of the engine air outlet. The invention relates also to a filter unit for such a filter housing.

No. of Pages : 14 No. of Claims : 7

(12) PATENT APPLICATION PUBLICATION
(19) INDIA
(22) Date of filing of Application :06/08/2014
(21) Application No.6606/DELNP/2014 A
(43) Publication Date : 22/05/2015

(54) Title of the invention : ENERGY STORAGE SYSTEMS HAVING AN ELECTRODE COMPRISING LIXSY

(51) International classification :H01M4/02,H01M4/62,H01M10/05
(31) Priority Document No :13/432166
(32) Priority Date :28/03/2012
(33) Name of priority country :U.S.A.
(86) International Application No :PCT/US2012/058402
Filing Date :02/10/2012
(87) International Publication No :WO 2013/147930
(61) Patent of Addition to Application Number :NA
Filing Date :NA
(62) Divisional to Application Number :NA
Filing Date :NA

(71)**Name of Applicant :**
1)BATTELLE MEMORIAL INSTITUTE
Address of Applicant :Intellectual Property Legal Services P.O. Box 999 M/S K1 53 Richland Washington 99352 U.S.A.
(72)**Name of Inventor :**
1)XIAO Jie
2)ZHANG Jiguang
3)GRAFF Gordon L.
4)LIU Jun
5)WANG Wei
6)ZHENG Jianming
7)XU Wu
8)SHAO Yuyan
9)YANG Zhenguo

(57) Abstract :
Improved lithium sulfur energy storage systems can utilizes LixSy as a component in an electrode of the system. For example the energy storage system can include a first electrode current collector a second electrode current collector and an ion permeable separator separating the first and second electrode current collectors. A second electrode is arranged between the second electrode current collector and the separator. A first electrode is arranged between the first electrode current collector and the separator and comprises a first condensed phase fluid comprising LixSy. The energy storage system can be arranged such that the first electrode functions as a positive or a negative electrode.

No. of Pages : 19 No. of Claims : 27

(12) PATENT APPLICATION PUBLICATION
(19) INDIA
(22) Date of filing of Application :06/08/2014
(21) Application No.6609/DELNP/2014 A
(43) Publication Date : 22/05/2015

(54) Title of the invention : MICROGEL CONTAINING TREAD MIXTURE FOR WINTER TYRES

(51) International classification :C08L19/00,C08K5/548,C08L7/00
(31) Priority Document No :12154896.0
(32) Priority Date :10/02/2012
(33) Name of priority country :EPO
(86) International Application No :PCT/EP2013/052694
Filing Date :11/02/2013
(87) International Publication No :WO 2013/117762
(61) Patent of Addition to Application Number :NA
Filing Date :NA
(62) Divisional to Application Number :NA
Filing Date :NA

(71)**Name of Applicant :**
1)LANXESS DEUTSCHLAND GMBH
Address of Applicant :Kennedyplatz 1 50569 Kln Germany
(72)**Name of Inventor :**
1)OBRECHT Werner
2)STEGER Lothar

(57) Abstract :
The present invention relates to vulcanisable rubber mixtures containing at least the following components: I) 100 pbw of an oil free rubber matrix consisting of a) 15 79 pbw preferably 20 70 pbw of at least one solution SBR (L SBR) (oil free) with a glass transition temperature (Tg) between 70°C and 10°C b) 20 75 pbw preferably 25 70 pbw of at least one 1 4 cis polybutadiene (BR) (oil free) with a glass transition temperature (Tg) between 95°C and 115°C c) 1 37.5 pbw preferably 5 35 pbw of natural rubber (NR) (oil free) and/or at least one synthetically produced polyisoprene (IR) with a glass transition temperature (Tg) between 50°C and 75°C relative to the oil free natural rubber (NR) or the oil free synthetically produced polyisoprene (IR); II) at least one polybutadiene based microgel that contains hydroxyl groups; III) at least one oxide filler that contains hydroxyl groups; IV) at least one polysulphide containing alkoxysilane; V) at least one vulcanisation agent; VI) optionally at least one rubber additive.

No. of Pages : 69 No. of Claims : 20

(12) PATENT APPLICATION PUBLICATION
(19) INDIA
(22) Date of filing of Application :11/08/2014
(21) Application No.6714/DELNP/2014 A
(43) Publication Date : 22/05/2015

(54) Title of the invention : FILM WITH OXYGEN ABSORBING REGIONS

(51) International classification :B65D65/40,B32B27/08,B32B27/18
(31) Priority Document No :13/370995
(32) Priority Date :10/02/2012
(33) Name of priority country :U.S.A.
(86) International Application No :PCT/US2013/025373
Filing Date :08/02/2013
(87) International Publication No :WO 2013/119972
(61) Patent of Addition to Application Number :NA
Filing Date :NA
(62) Divisional to Application Number :NA
Filing Date :NA

(71)**Name of Applicant :**
1)MULTISORB TECHNOLOGIES INC.
Address of Applicant :325 Harlem Road Buffalo New York 14224 U.S.A.
(72)**Name of Inventor :**
1)CHAU Chieh Chun

(57) Abstract :
A packaging material includes an oxygen scavenger material dispersed in bands in a polymer sheet.

No. of Pages : 26 No. of Claims : 25

(12) PATENT APPLICATION PUBLICATION
(21) Application No.6715/DELNP/2014 A
(19) INDIA
(22) Date of filing of Application :11/08/2014
(43) Publication Date : 22/05/2015

(54) Title of the invention : METHOD FOR PRODUCING 5 HYDROXYMETHYL FURFURAL

(51) International classification :C07D307/46
(31) Priority Document No :2012071113
(32) Priority Date :27/03/2012
(33) Name of priority country :Japan
(86) International Application No :PCT/JP2013/055559
Filing Date :28/02/2013
(87) International Publication No :WO 2013/146085
(61) Patent of Addition to Application Number :NA
Filing Date :NA
(62) Divisional to Application Number :NA
Filing Date :NA

(71)**Name of Applicant :**
1)KAO CORPORATION
Address of Applicant :14 10 Nihonbashi Kayabacho 1 chome Chuo ku Tokyo 1038210 Japan
(72)**Name of Inventor :**
1)WATANABE Masahiko
2)YASHIRO Kai
3)NISHI Takafumi

(57) Abstract :
The present invention relates to: a method for producing 5 hydroxymethyl furfural (HMF) which comprises the steps a c described below; and a method for producing 5 hydroxymethyl furfural oxide which comprises the steps a d described below. Each of the methods simply and economically produces high purity 5 hydroxymethyl furfural or an oxide thereof from a starting sugar material. Step a: A step wherein the staring sugar material is subjected to a dehydration reaction in the presence of a reaction solvent thereby producing HMF in the reaction solvent and obtaining a reaction solvent containing HMF. Step b: A step wherein HMF is extracted from the reaction solvent containing HMF which has been obtained in step a into a hydrophobic solvent thereby obtaining a hydrophobic solvent containing HMF. Step c: A step wherein HMF is extracted from the hydrophobic solvent containing HMF which has been obtained in step b into water thereby obtaining an aqueous solution containing HMF. Step d: A step wherein HMF which has been obtained in step c is oxidized.

No. of Pages : 77 No. of Claims : 12

(12) PATENT APPLICATION PUBLICATION
(19) INDIA
(22) Date of filing of Application :05/08/2014
(21) Application No.6598/DELNP/2014 A
(43) Publication Date : 22/05/2015

(54) Title of the invention : PRODUCTION OF COAL COMBUSTION PRODUCTS FOR USE IN CEMENTITIOUS MATERIALS

(51) International classification :C04B18/06,C10L9/10
(31) Priority Document No :61/585698
(32) Priority Date :12/01/2012
(33) Name of priority country :U.S.A.
(86) International Application No :PCT/US2013/021451
Filing Date :14/01/2013
(87) International Publication No :WO 2013/106835
(61) Patent of Addition to Application Number :NA
Filing Date :NA
(62) Divisional to Application Number :NA
Filing Date :NA

(71)**Name of Applicant :**
1)ASH IMPROVEMENT TECHNOLOGY INC.
Address of Applicant :5450 48th Street Maspeth New York 11378 U.S.A.
(72)**Name of Inventor :**
1)FRIED Wayne

(57) Abstract :
A method and system (10) for producing modified coal combustion products are disclosed. The additives reduce the particle sizes of the coal combustion product and may also reduce the un burned carbon content of the coal combustion product making the modified product useful as an addition to cementitious materials.

No. of Pages : 21 No. of Claims : 20

(12) PATENT APPLICATION PUBLICATION
(19) INDIA
(22) Date of filing of Application :06/08/2014
(21) Application No.6599/DELNP/2014 A
(43) Publication Date : 22/05/2015

(54) Title of the invention : PREPARING A PRECURED TREAD FOR APPLICATION TO A TIRE CARCASS

(51) International classification :B29D30/58
(31) Priority Document No :NA
(32) Priority Date :NA
(33) Name of priority country :NA
(86) International Application No :PCT/US2012/027116
Filing Date :29/02/2012
(87) International Publication No :WO 2013/130070
(61) Patent of Addition to Application Number :NA
Filing Date :NA
(62) Divisional to Application Number :NA
Filing Date :NA

(71)**Name of Applicant :**
1)MICHELIN RECHERCHE ET TECHNIQUE S.A.
Address of Applicant :Route Louis Braille 10 CH 1763 Granges Paccot Switzerland
2)COMPAGNIE GENERALE DES ETABLISSEMENTS MICHELIN
(72)**Name of Inventor :**
1)COLBY E. Bruce
2)TSIHLAS Dimitri G.
3)ZARAK Cesar E.
4)IKONOMOV Metodi L.

(57) Abstract :
The present invention comprises methods and apparatus for preparing a tread for application to a tire carcass by abrading a bottom side of the tread. In particular the tread has a thickness extending depthwise between a top side and a bottom side of the tread. The tread thickness extends in a longitudinal direction and in a lateral direction between opposing sides of the tread. The tread further includes a void extending within the tread thickness and an extension of the tread extending across a width of the void and as a portion protruding outwardly from the tread bottom side by a distance. Such methods include stretching the tread such that the width of the tread void increases and the distance by which the extension protrudes from the bottom side decreases. Such methods further include abrading the bottom side of the tread.

No. of Pages : 28 No. of Claims : 22

(12) PATENT APPLICATION PUBLICATION
(19) INDIA
(22) Date of filing of Application :11/08/2014
(21) Application No.6709/DELNP/2014 A
(43) Publication Date : 22/05/2015

(54) Title of the invention : METHODS AND APPARATUSES FOR WATER PURIFICATION

(51) International classification :B01D3/32,B01D3/02,C02F1/04
(31) Priority Document No :61/585293
(32) Priority Date :11/01/2012
(33) Name of priority country :U.S.A.
(86) International Application No :PCT/SG2013/000017
Filing Date :11/01/2013
(87) International Publication No :WO 2013/105905
(61) Patent of Addition to Application Number :NA
Filing Date :NA
(62) Divisional to Application Number :NA
Filing Date :NA

(71)**Name of Applicant :**
1)CHANG Huei Meng
Address of Applicant :Blk 412B Fernvale Link #18 27 Singapore 792412 Singapore
(72)**Name of Inventor :**
1)CHANG Huei Meng

(57) Abstract :
An apparatus for generating purified liquid from an input liquid comprises an evaporation chamber wherein the evaporation chamber is flooded with the input liquid; and a condensation chamber having channels wherein the channels are disposed in the input liquid wherein liquid saturated gases are generated from the input liquid in the evaporation chamber wherein the liquid saturated gases are guided into a first end of the channels and wherein the purified liquid is outputted at a second end of the channels.

No. of Pages : 66 No. of Claims : 20

(12) PATENT APPLICATION PUBLICATION
(19) INDIA
(22) Date of filing of Application :11/08/2014
(21) Application No.6710/DELNP/2014 A
(43) Publication Date : 22/05/2015

(54) Title of the invention : INHIBITORS OF BETA SECRETASE

(51) International classification :C07D235/02,C07D403/06,C07D407/06
(31) Priority Document No :61/606786
(32) Priority Date :05/03/2012
(33) Name of priority country :U.S.A.
(86) International Application No :PCT/US2013/028796
Filing Date :04/03/2013
(87) International Publication No :WO 2013/134085
(61) Patent of Addition to Application Number :NA
Filing Date :NA
(62) Divisional to Application Number :NA
Filing Date :NA

(71)**Name of Applicant :**
1)BOEHRINGER INGELHEIM INTERNATIONAL GMBH
Address of Applicant :Binger Strasse 173 55216 Ingelheim Am Rhein Germany
2)VITAE PHARMACEUTICALS INC.
(72)**Name of Inventor :**
1)BUKHTIYAROV Yuri
2)CACATIAN Salvacion
3)DILLARD Lawrence Wayne
4)DORNER CIOSSEK Cornelia
5)FUCHS Klaus
6)JIA Lanqi
7)LALA Deepak S.
8)MORALES RAMOS Angel
9)RAST Georg
10)REEVES Jonathan
11)SINGH Suresh B.
12)VENKATRAMAN Shankar
13)XU Zhenrong
14)YUAN Jing
15)ZHAO Yi
16)ZHENG Yajun

(57) Abstract :
The present invention relates to spirocyclic acylguanidines and their use as inhibitors of the secretase enzyme (BACEl) activity pharmaceutical compositions containing the same and methods of using the same as therapeutic agents in the treatment of neurodegenerative disorders disorders characterized by cognitive decline cognitive impairment dementia and diseases characterized by production of amyloid aggregates.

No. of Pages : 65 No. of Claims : 14

(12) PATENT APPLICATION PUBLICATION
(19) INDIA
(22) Date of filing of Application :11/08/2014
(21) Application No.6711/DELNP/2014 A
(43) Publication Date : 22/05/2015

(54) Title of the invention : PHARMACEUTICAL COMPOSITIONS AND METHODS

(51) International classification :A61K31/195,A61K38/00,A61P35/00
(31) Priority Document No :61/587420
(32) Priority Date :17/01/2012
(33) Name of priority country :U.S.A.
(86) International Application No :PCT/US2013/021714
Filing Date :16/01/2013
(87) International Publication No :WO 2013/109610
(61) Patent of Addition to Application Number :NA
Filing Date :NA
(62) Divisional to Application Number :NA
Filing Date :NA

(71)**Name of Applicant :**
1)Tyme Inc.
Address of Applicant :2711Centerville Road Suite 400 Wilmington Delaware 19808 U.S.A.
(72)**Name of Inventor :**
1)HOFFMAN Steven

(57) Abstract :
Pharmaceutical compositions and kits including a tyrosine hydroxylase inhibitor; melanin a melanin promoter or a combination thereof; a p450 3A4 promoter; and a leucine aminopeptidase inhibitor are provided. Also provided are methods of treating cancer in a subject comprising administering an effective amount of a tyrosine hydroxylase inhibitor a melanin promoter a p450 3A4 promoter and a leucine aminopeptidase inhibitor to the subject in need thereof. Also provided are methods of reducing cell proliferation in a subject comprising administering an effective amount of a tyrosine hydroxylase inhibitor a melanin promoter a p450 3A4 promoter and a leucine aminopeptidase inhibitor to the subject in need thereof.

No. of Pages : 38 No. of Claims : 116

(12) PATENT APPLICATION PUBLICATION
(19) INDIA
(22) Date of filing of Application :11/08/2014
(21) Application No.6720/DELNP/2014 A
(43) Publication Date : 22/05/2015

(54) Title of the invention : SURGICAL SUTURE WITH SOFT CORE

(51) International classification :A61B17/06,A61L17/00
(31) Priority Document No :61/605730
(32) Priority Date :01/03/2012
(33) Name of priority country :U.S.A.
(86) International Application No :PCT/US2013/027943
Filing Date :27/02/2013
(87) International Publication No :WO 2013/130547
(61) Patent of Addition to Application Number :NA
Filing Date :NA
(62) Divisional to Application Number :NA
Filing Date :NA

(71)**Name of Applicant :**
1)SYNTHES GMBH
Address of Applicant :Eimattstrasse 3 CH 4436 Oberdorf Switzerland
(72)**Name of Inventor :**
1)GEDET Philippe
2)LECHMANN Beat
3)VOISARD Cyril

(57) Abstract :
A fastening element (100) comprising (a) a non load bearing core (110) the non load bearing core comprising a first biocompatible polymer; (b) a load bearing sheath (120) the load bearing sheath comprising a second biocompatible polymer wherein the load bearing sheath surrounds the non load bearing core. The fastening element can be used as a suture shoe lace or rope. The non load bearing core has a Durometer Hardness Type A value ranging from 15 to 30. The load bearing sheath is formed from a plurality of yarns each yarn comprising a plurality of filaments in form of mono or multifilament of the second biocompatible polymer. Each yarn may have a tenacity at break value ranging from 30 cN/dtex to 45 cN/dtex.

No. of Pages : 20 No. of Claims : 14

(12) PATENT APPLICATION PUBLICATION
(19) INDIA
(22) Date of filing of Application :11/08/2014
(21) Application No.6722/DELNP/2014 A
(43) Publication Date : 22/05/2015

(54) Title of the invention : COMBINED THERAPEUTIC USE OF ANTIBODIES AND ENDOGLYCOSIDASES

(51) International classification :A61K39/395,C12N9/24,C07K16/32
(31) Priority Document No :1201314.0
(32) Priority Date :26/01/2012
(33) Name of priority country :U.K.
(86) International Application No :PCT/GB2013/050164
Filing Date :25/01/2013
(87) International Publication No :WO 2013/110946
(61) Patent of Addition to Application Number :NA
Filing Date :NA
(62) Divisional to Application Number :NA
Filing Date :NA

(71)**Name of Applicant :**
1)IMMAGO BIOSYSTEMS LTD
Address of Applicant :Teme Place Teme Road Cheltenham GL52 6UE U.K.
(72)**Name of Inventor :**
1)IMMAGO BIOSYSTEMS LTD

(57) Abstract :
The invention relates to compositions comprising therapeutic antibodies and uses and methods for increasing the potency of therapeutic antibodies. In particular the invention provides a composition comprising (i) an agent which reduces Fc receptor binding of endogenous serum antibodies and (ii) a therapeutic antibody preferably a therapeutic antibody which is resistant to the agent. The therapeutic antibody may be administered to the subject after a set time interval or the blood of the subject may be treated with the agent prior to administration of the therapeutic antibody.

No. of Pages : 70 No. of Claims : 20

(12) PATENT APPLICATION PUBLICATION
(21) Application No.6723/DELNP/2014 A
(19) INDIA
(22) Date of filing of Application :11/08/2014
(43) Publication Date : 22/05/2015

(54) Title of the invention : HIGH PRESSURE RADICAL ETHYLENE CO POLYMERIZATION PROCESS WITH A REDUCED TEMPERATURE OF THE REACTION MIXTURE PRIOR TO INTRODUCTION INTO THE REACTION ZONE

(51) International classification :C08F210/02,C08F2/00
(31) Priority Document No :12002397.3
(32) Priority Date :02/04/2012
(33) Name of priority country :EPO
(86) International Application No :PCT/EP2013/000017
Filing Date :07/01/2013
(87) International Publication No :WO 2013/149690
(61) Patent of Addition to Application Number :NA
Filing Date :NA
(62) Divisional to Application Number :NA
Filing Date :NA

(71)**Name of Applicant :**
1)BOREALIS AG
Address of Applicant :IZD Tower Wagramerstr. 17 19 A 1220 Wien Austria
(72)**Name of Inventor :**
1)MAGNUSSON Torbjrn
2)HJERTBERG Thomas
3)BERGQVIST Mattias
4)JOHANSSON Kenneth
5)VOIGT Bjrn

(57) Abstract :
The present invention relates to a high pressure radical ethylene polymerization process in which ethylene is polymerized with a polyunsaturated olefin comprising at least 6 carbon atoms and at least two non conjugated double bonds of which at least one is terminal; and/or an alpha omega divinylsiloxane according to Formula (I) wherein R and R which can be alike or different are selected among alkyl groups having 1 4 carbon atoms and alkoxy groups having 1 4 carbon atoms and n is 1 200 characterized in that the maximum temperature of the reaction mixture prior to introduction into the reaction zone is 160 °C or less.

No. of Pages : 18 No. of Claims : 13

(12) PATENT APPLICATION PUBLICATION
(21) Application No.6725/DELNP/2014 A
(19) INDIA
(22) Date of filing of Application :11/08/2014
(43) Publication Date : 22/05/2015

(54) Title of the invention : NON CONTACT ELECTRIC POWER TRANSFER DEVICE NON CONTACT ELECTRIC POWER RECEPTION DEVICE AND NON CONTACT ELECTRIC POWER RECEPTION SYSTEM

(51) International classification	:H02J17/00
(31) Priority Document No	:NA
(32) Priority Date	:NA
(33) Name of priority country	:NA
(86) International Application No	:PCT/JP2012/054221
Filing Date	:22/02/2012
(87) International Publication No	:WO 2013/124977
(61) Patent of Addition to Application Number	:NA
Filing Date	:NA
(62) Divisional to Application Number	:NA
Filing Date	:NA

(71)**Name of Applicant :**
1)TOYOTA JIDOSHA KABUSHIKI KAISHA
Address of Applicant :1 Toyota cho Toyota shi Aichi 4718571 Japan
(72)**Name of Inventor :**
1)ICHIKAWA Shinji

(57) Abstract :
A non contact electric power transfer device is capable of transferring electric power to an electric power reception device (100) without contact and is provided with an electric power transfer unit (220) configured to be capable of transferring electric power to the electric power reception device without contact and a communication part (230) for transmitting to the electric power reception device information relating to a magnetic flux distribution of the electric power transfer unit during transfer of electric power. Preferably this information is used to determine whether the electric power reception device (100) is to receive electric power from the non contact electric power transfer device (200). More preferably the communication part (230) transmits information before the electric power transfer unit (220) begins transferring electric power to the electric power reception device (100).

No. of Pages : 79 No. of Claims : 14

(12) PATENT APPLICATION PUBLICATION
(21) Application No.6629/DELNP/2014 A
(19) INDIA
(22) Date of filing of Application :06/08/2014
(43) Publication Date : 22/05/2015

(54) Title of the invention : DISC BRAKE AND SENSOR DEVICE FOR IT

(51) International classification :F16D66/02,F16D55/227
(31) Priority Document No :20 2012 001 863.9
(32) Priority Date :22/02/2012
(33) Name of priority country :Germany
(86) International Application No :PCT/EP2013/053218
Filing Date :18/02/2013
(87) International Publication No :WO 2013/124247
(61) Patent of Addition to Application Number :NA
Filing Date :NA
(62) Divisional to Application Number :NA
Filing Date :NA

(71)**Name of Applicant :**
1)HALDEX BRAKE PRODUCTS AB
Address of Applicant :Box 501 S 261 24 Landskrona Sweden
(72)**Name of Inventor :**
1)WELIN Hans

(57) Abstract :
A disc brake and to a sensor device being applied in connection with such a disc brake. The sensor device (16) comprises a hollow shaft (21) which cooperates with a rotary element (8) the rotary element (8) is set into rotation during the adjustment movement of a corresponding adjustment device of an actuation mechanism of that disc brake in which the rotary element (8) comprises a socket for the reception of a reset tool (31) which socket will always be freely accessible.

No. of Pages : 23 No. of Claims : 20

(12) PATENT APPLICATION PUBLICATION
(21) Application No.6730/DELNP/2014 A
(19) INDIA
(22) Date of filing of Application :11/08/2014
(43) Publication Date : 22/05/2015

(54) Title of the invention : CURRENT SENSOR AND POWER CONVERTER

(51) International classification :G01R19/00
(31) Priority Document No :NA
(32) Priority Date :NA
(33) Name of priority country :NA
(86) International Application No :PCT/JP2012/054426
Filing Date :23/02/2012
(87) International Publication No :WO 2013/125011
(61) Patent of Addition to Application Number :NA
Filing Date :NA
(62) Divisional to Application Number :NA
Filing Date :NA

(71)**Name of Applicant :**
1)TOYOTA JIDOSHA KABUSHIKI KAISHA
Address of Applicant :1 Toyota cho Toyota shi Aichi 4718571 Japan
(72)**Name of Inventor :**
1)SEO Yusuke
2)TORII Kaoru
3)HIROSE Kentaro
4)KIKUCHI Naoto
5)TAKAGI Kenichi
6)MORIYA Kazunari

(57) Abstract :
Provided is a current measuring technology wherein influence of switching noise is suppressed. A technology disclosed by the present description is a current sensor which measures an output current of a switching circuit. The current sensor is provided with a magnetic optical element disposed at a current measuring point a light source for radiating light to the magnetic optical element and a light receiver that receives light passed through or reflected by the magnetic optical element. The light source radiates light in synchronization with carrier signals of the switching circuit. The light source radiates the light in synchronization with the carrier signals and measures the current using the light. Since the light is synchronized with the carrier signals the current can be measured at timing other than switching timing due to PWM signals generated on the basis of the carrier signals.

No. of Pages : 22 No. of Claims : 4

(12) PATENT APPLICATION PUBLICATION
(19) INDIA
(22) Date of filing of Application :11/08/2014
(21) Application No.6734/DELNP/2014 A
(43) Publication Date : 22/05/2015

(54) Title of the invention : ORAL PHARMACEUTICAL COMPOSITIONS OF DABIGATRAN ETEXILATE

(51) International classification :A61K9/16,A61K9/50,A61K31/4439
(31) Priority Document No :461/MUM/2012
(32) Priority Date :21/02/2012
(33) Name of priority country :India
(86) International Application No :PCT/EP2013/053426
Filing Date :21/02/2013
(87) International Publication No :WO 2013/124340
(61) Patent of Addition to Application Number :NA
Filing Date :NA
(62) Divisional to Application Number :NA
Filing Date :NA

(71)**Name of Applicant :**
1)LABORATORIOS DEL DR. ESTEVE S.A.
Address of Applicant :Avda. Mare de Du de Montserrat 221 E 08041 Barcelona Spain
(72)**Name of Inventor :**
1)PILGAONKAR Pratibha S.
2)RUSTOMJEE Maharukh T.
3)GANDHI Anilkumar S.

(57) Abstract :
Compositions comprising a mixture of at least two types of particles wherein a) the first type of particles comprise dabigatran etexilate in the form of the free base or in the form of pharmaceutically acceptable salts polymorphs solvates or hydrates thereof; and b) the second type of particles comprise at least one pharmaceutically acceptable organic acid use of said compositions in the reduction of the risk of stroke and systemic embolism in patients with non valvular atrial fibrillation and/or in the prevention of venous thromboembolic events in adult patients who have undergone elective total hip replacement surgery or total knee replacement surgery and processes for the preparation of said compositions.

No. of Pages : 29 No. of Claims : 20

(12) PATENT APPLICATION PUBLICATION
(19) INDIA
(22) Date of filing of Application :11/08/2014
(21) Application No.6735/DELNP/2014 A
(43) Publication Date : 22/05/2015

(54) Title of the invention : METHOD AND APPARATUS FOR CONVERTING AUDIO VIDEO AND CONTROL SIGNALS

(51) International classification	:H04N21/236,H04N21/434,H04N21/438
(31) Priority Document No	:1202472.5
(32) Priority Date	:10/02/2012
(33) Name of priority country	:U.K.
(86) International Application No	:PCT/GB2013/000054
Filing Date	:11/02/2013
(87) International Publication No	:WO 2013/117889
(61) Patent of Addition to Application Number	:NA
Filing Date	:NA
(62) Divisional to Application Number	:NA
Filing Date	:NA

(71)**Name of Applicant :**
1)BRITISH BROADCASTING CORPORATION
Address of Applicant :Broadcasting House Portland Place London W1A 1AA U.K.
(72)**Name of Inventor :**
1)PINKS Nicholas
2)WEAVER James
3)MITCHELL Justin
4)THORP Martin

(57) Abstract :
An apparatus for converting between synchronous audio video and control signals and asynchronous data streams for an IP network as interfaces for the audio and video signals and for control signals. A processor is arranged to convert between the synchronous audio video and control signals and asynchronous packaged data streams. The data streams are sent on a stream according to IP standards that are selected according to the nature of the signal to be transmitted.

No. of Pages : 37 No. of Claims : 30

(12) PATENT APPLICATION PUBLICATION
(19) INDIA
(22) Date of filing of Application :11/08/2014
(21) Application No.6737/DELNP/2014 A
(43) Publication Date : 22/05/2015

(54) Title of the invention : MATERIALS AND METHODS FOR TREATING DIARRHEA

(51) International classification :A61K31/70,A61K31/505,A61K9/16
(31) Priority Document No :61/596480
(32) Priority Date :08/02/2012
(33) Name of priority country :U.S.A.
(86) International Application No :PCT/US2013/025294
Filing Date :08/02/2013
(87) International Publication No :WO 2013/119917
(61) Patent of Addition to Application Number :NA
Filing Date :NA
(62) Divisional to Application Number :NA
Filing Date :NA

(71)**Name of Applicant :**
1)UNIVERSITY OF FLORIDA RESEARCH FOUNDATION INC.
Address of Applicant :223 Grinter Hall Gainesville FL 32611 U.S.A.
(72)**Name of Inventor :**
1)VIDYASAGAR Sadasivan
2)OKUNIEFF Paul
3)ZHANG Lurong

(57) Abstract :
The present invention provides therapeutic compositions and methods for treating gastrointestinal diseases and conditions such as diarrhea for providing rehydration for correcting electrolyte and fluid imbalances and/or for improving small intestine function. In one embodiment the present invention provides a composition formulated for enteral administration wherein the composition does not contain glucose. In a preferred embodiment the composition is formulated for administration as an oral rehydration drink.

No. of Pages : 40 No. of Claims : 20

(12) PATENT APPLICATION PUBLICATION
(21) Application No.6648/DELNP/2014 A
(19) INDIA
(22) Date of filing of Application :07/08/2014
(43) Publication Date : 22/05/2015

(54) Title of the invention : CONTINUOUSLY VARIABLE TRANSMISSION

(51) International classification :F16H15/52
(31) Priority Document No :NA
(32) Priority Date :NA
(33) Name of priority country :NA
(86) International Application No :PCT/JP2012/054641
Filing Date :24/02/2012
(87) International Publication No :WO 2013/125041
(61) Patent of Addition to Application Number :NA
Filing Date :NA
(62) Divisional to Application Number :NA
Filing Date :NA

(71)**Name of Applicant :**
1)TOYOTA JIDOSHA KABUSHIKI KAISHA
Address of Applicant :1 Toyota cho Toyota shi Aichi 4718571 Japan
(72)**Name of Inventor :**
1)ARATSU Yuki
2)MURAKAMI Akira
3)OGAWA Hiroyuki
4)HIBINO Akira

(57) Abstract :
A continuously variable transmission (1) is provided with a first rotation element (10) a second rotation element (20) a rolling member (50) a support shaft (51) and a supporting rotation element (40). The supporting rotation element (40) has: a fixed element (41) in which a first guiding part (44) for guiding a first guided end (52) is provided; and a movable element (42) in which a second guiding part (45) for guiding a second guided end (53) is provided. The support shaft (51) is configured such that either the movement distance of the first guided end (52) when tilted and rotated with the rotating member (50) or the movement distance of the second guided end (53) when tilted and rotated with the rotating member (50) is relatively large and the other is relatively small. In regard to the first guided end (52) and the second guided end (53) the external diameter of the guided end having the relatively large movement distance is relatively larger than the external diameter of that having the relatively small movement distance. As a result the continuously variable transmission (1) exhibits the effect that smooth transmission operations can be achieved.

No. of Pages : 50 No. of Claims : 7

(12) PATENT APPLICATION PUBLICATION
(21) Application No.6649/DELNP/2014 A
(19) INDIA
(22) Date of filing of Application :07/08/2014
(43) Publication Date : 22/05/2015

(54) Title of the invention : OPERATING A CURRENT CONVERTER AT A PATH OF TRAVEL OF LAND VEHICLES OR AT A PARKING SPACE OF A LAND VEHICLE

(51) International classification :B60L5/00,H05K7/20
(31) Priority Document No :1205439.1
(32) Priority Date :27/03/2012
(33) Name of priority country :U.K.
(86) International Application No :PCT/EP2013/056076
Filing Date :22/03/2013
(87) International Publication No :WO 2013/144014
(61) Patent of Addition to Application Number :NA
Filing Date :NA
(62) Divisional to Application Number :NA
Filing Date :NA

(71)**Name of Applicant :**
1)BOMBARDIER TRANSPORTATION GMBH
Address of Applicant :Schneberger Ufer 1 10785 Berlin Germany
(72)**Name of Inventor :**
1)ZENGERLE Manfred
2)REIMERS Hans Heinrich

(57) Abstract :
The invention relates to an arrangement for operating a current converter (1) in particular an inverter wherein the converter (1) is located at a path of travel (8) of land vehicles or at a parking space of a land vehicle the converter (1) being adapted to support operation of at least one vehicle the converter (1) is combined with a cooling device (3) adapted to cool the converter (1) during operation the cooling device (3) is designed to use a heat transport medium in order to transport heat away from the converter (1) the arrangement comprises at least one pole (13) and/or at least one supporting structure which is also located at the path of travel (8) or at the parking space the pole (13) and/or the supporting structure extends upwards from ground the arrangement comprises a conduct (14) for conducting the heat transport medium and the conduct (14) extends from the cooling device (3) to the pole (13) and/or to the supporting structure and also extends inside the pole (13) and/or inside the supporting structure so that heat can be transferred from the heat transport medium inside the pole (13) and/or inside the supporting structure to the ambiance.

No. of Pages : 16 No. of Claims : 6

(12) PATENT APPLICATION PUBLICATION
(21) Application No.6650/DELNP/2014 A
(19) INDIA
(22) Date of filing of Application :07/08/2014
(43) Publication Date : 22/05/2015

(54) Title of the invention : ARTHROSCOPIC SURGICAL DEVICE

(51) International classification :A61B17/04
(31) Priority Document No :61/584 267
(32) Priority Date :08/01/2012
(33) Name of priority country :U.S.A.
(86) International Application No :PCT/IL2013/050030
Filing Date :15/01/2013
(87) International Publication No :WO 2013/102909
(61) Patent of Addition to Application Number :NA
Filing Date :NA
(62) Divisional to Application Number :NA
Filing Date :NA

(71)**Name of Applicant :**
1)MININVASIVE LTD.
Address of Applicant :137 Hashachaf P.O. Box 305 3884500 Magal Israel
(72)**Name of Inventor :**
1)SHOLEV Moti
2)MELOUL Raphael
3)RAZ Ronen
4)HARARI Boaz

(57) Abstract :
An arthroscopic bone tunneling and suturing device including a bone engaging needle driving assembly including a bone engaging needle and being adapted for arthroscopic insertion into engagement with a patient s bone at a first bone location through an arthroscopic incision and for driving the needle forwardly along a generally arcuate tunneling path through the bone at least to a second bone location and a bone engaging pin driving assembly arranged for operative engagement with the bone engaging needle driving assembly and being adapted for arthroscopic insertion into engagement with a patient s bone at a third bone location through the arthroscopic incision.

No. of Pages : 84 No. of Claims : 20

(12) PATENT APPLICATION PUBLICATION
(19) INDIA
(22) Date of filing of Application :11/08/2014
(21) Application No.6738/DELNP/2014 A
(43) Publication Date : 22/05/2015

(54) Title of the invention : PROCESS FOR THE PREPARATION OF INGENOL 3 ANGELATE

(51) International classification :C12P15/00,C12P5/00,C12P7/62
(31) Priority Document No :61/590544
(32) Priority Date :25/01/2012
(33) Name of priority country :U.S.A.
(86) International Application No:PCT/EP2013/051431
Filing Date :25/01/2013
(87) International Publication No :WO 2013/110753
(61) Patent of Addition to Application Number :NA
Filing Date :NA
(62) Divisional to Application Number :NA
Filing Date :NA

(71)**Name of Applicant :**
1)LEO PHARMA A/S
Address of Applicant :Industriparken 55 DK 2750 Ballerup Denmark
2)LEO LABORATORIES LIMITED
(72)**Name of Inventor :**
1)LIANG Xifu
2)H–GBERG Thomas
3)GRUE SˇRENSEN Gunnar
4)MOODY Thomas S.
5)ROWAN Andrew S.

(57) Abstract :
The invention relates to methods for preparing ingenol 3 angelate from ingenol or ingenol derivatives.

No. of Pages : 86 No. of Claims : 35

(12) PATENT APPLICATION PUBLICATION
(19) INDIA
(22) Date of filing of Application :07/08/2014
(21) Application No.6644/DELNP/2014 A
(43) Publication Date : 22/05/2015

(54) Title of the invention : DROPLET FORMATION USING FLUID BREAKUP

(51) International classification :B01F3/08,B01F5/04,B01F13/00
(31) Priority Document No :61/596658
(32) Priority Date :08/02/2012
(33) Name of priority country :U.S.A.
(86) International Application No:PCT/US2013/025058
Filing Date :07/02/2013
(87) International Publication No :WO 2013/119753
(61) Patent of Addition to Application Number :NA
Filing Date :NA
(62) Divisional to Application Number :NA
Filing Date :NA

(71)**Name of Applicant :**
1)PRESIDENT AND FELLOWS OF HARVARD COLLEGE
Address of Applicant :17 Quincy Street Cambridge MA 02138 U.S.A.
(72)**Name of Inventor :**
1)ABATE Adam R.
2)WEITZ David A.

(57) Abstract :
The present invention generally relates to systems and methods for creating droplets. In one aspect a plurality of droplets (27) is introduced into a continuous fluid stream (21) to cause the continuous fluid stream to form discrete droplets. In some cases the droplets that are formed from the continuous fluid stream may be substantially monodisperse. The continuous fluid stream may in some cases be a jetting fluid stream flowing at a relatively high linear flow rate and in certain embodiments high rates of droplet formation from the jetting fluid may thereby be achieved. Additionally certain aspects of the invention are generally directed to devices such as microfluidic devices able to form such droplets. For example in one set of embodiments a device may include a junction (14) where a plurality of droplets (27) can be introduced into a continuous fluid stream (21) and optionally the device may include additional junctions (12) able to cause the formation of the plurality of droplets and/or the formation of the continuous fluid stream. Still other disclosed aspects are generally directed to methods of making such devices methods of using such devices kits involving such devices and the like.

No. of Pages : 41 No. of Claims : 35

(12) PATENT APPLICATION PUBLICATION
(19) INDIA
(22) Date of filing of Application :07/08/2014
(21) Application No.6645/DELNP/2014 A
(43) Publication Date : 22/05/2015

(54) Title of the invention : METHOD FOR POLISHING AN OPTICAL SURFACE BY MEANS OF A POLISHING TOOL

(51) International classification :B24B13/06
(31) Priority Document No :1252060
(32) Priority Date :07/03/2012
(33) Name of priority country :France
(86) International Application No :PCT/EP2013/054493
Filing Date :06/03/2013
(87) International Publication No :WO 2013/131950
(61) Patent of Addition to Application Number :NA
Filing Date :NA
(62) Divisional to Application Number :NA
Filing Date :NA

(71)**Name of Applicant :**
1)ESSILOR INTERNATIONAL (COMPAGNIE GENERALE DOPTIQUE)
Address of Applicant :147 rue de Paris F 94220 Charenton le Pont France
(72)**Name of Inventor :**
1)BATARD Alain
2)GACOIN Eric
3)SAULNY Jonathan
4)STEPHANE Jean

(57) Abstract :
Polishing method comprising a step of receiving a surface to be polished a configuration step during which the polishing machine is configured and a polishing step during which the optical surface is polished wherein the angle of inclination of the pin is between 2° and 20° the inner cusp point is between 10 mm and 10 mm the outer cusp point is between R 15mm and R 5mm the speed of advance is between 100 mm/min and 2000 mm/min; the speed of rotation is between 500 rpm and 3000 rpm; and the bearing force is between 50 N and 180 N.

No. of Pages : 20 No. of Claims : 13

(12) PATENT APPLICATION PUBLICATION
(19) INDIA
(22) Date of filing of Application :07/08/2014
(21) Application No.6646/DELNP/2014 A
(43) Publication Date : 22/05/2015

(54) Title of the invention : DRIVING ASSISTANCE APPARATUS

(51) International classification :G08G1/16,G08G1/095
(31) Priority Document No :NA
(32) Priority Date :NA
(33) Name of priority country :NA
(86) International Application No :PCT/JP2012/053192
Filing Date :10/02/2012
(87) International Publication No :WO 2013/118307
(61) Patent of Addition to Application Number :NA
Filing Date :NA
(62) Divisional to Application Number :NA
Filing Date :NA

(71)**Name of Applicant :**
1)TOYOTA JIDOSHA KABUSHIKI KAISHA
Address of Applicant :1 Toyota cho Toyota shi Aichi 4718571 Japan
(72)**Name of Inventor :**
1)MUKAIYAMA Yoshio

(57) Abstract :
A driving assistance apparatus (1) provides driving assistance for a host vehicle (2) on the basis of traffic light cycle information related to a color cycle of a traffic light at an intersection (71) at which a service is to be provided. If the driving assistance apparatus (1) cannot acquire the signal cycle information the driving assistance apparatus (1) estimates traffic light cycle information on the basis of surrounding information of the intersection (71) which is infrastructure data and provides driving assistance on the basis of the estimated traffic light cycle information. By doing so the driving assistance apparatus (1) can appropriately provide driving assistance even if traffic light cycle information cannot be acquired.

No. of Pages : 65 No. of Claims : 12

(12) PATENT APPLICATION PUBLICATION
(19) INDIA
(22) Date of filing of Application :12/08/2014
(21) Application No.6750/DELNP/2014 A
(43) Publication Date : 22/05/2015

(54) Title of the invention : GRAPHICAL VIEW OF SOCIAL CONTENT STREAMS

(51) International classification :G06Q50/30,G06Q50/10
(31) Priority Document No :13/349361
(32) Priority Date :12/01/2012
(33) Name of priority country :U.S.A.
(86) International Application No :PCT/US2013/021308
Filing Date :11/01/2013
(87) International Publication No :WO 2013/106767
(61) Patent of Addition to Application Number :NA
Filing Date :NA
(62) Divisional to Application Number :NA
Filing Date :NA

(71)**Name of Applicant :**
1)GOOGLE INC.
Address of Applicant :1600 Amphitheatre Parkway Mountain View CA 94043 U.S.A.
(72)**Name of Inventor :**
1)LIU Sean
2)ELLIS Sabrina Chueh

(57) Abstract :
A system and machine implemented method for displaying a list of entries for a social content stream is provided. A set of entries is obtained from at least one source associated with the social content stream. Information is extracted from each entry of the set of entries. A score for each of the set of entries is determined based on the information extracted from each of the set of entries. An arrangement of frames corresponding to the set of entries based on the determined scores is provided for display. The frames are displayable within a predefined area of a display on a user device. The geometry of each frame is based on the determined scores of the set of entries.

No. of Pages : 27 No. of Claims : 22

(12) PATENT APPLICATION PUBLICATION
(19) INDIA
(22) Date of filing of Application :07/08/2014
(21) Application No.6655/DELNP/2014 A
(43) Publication Date : 22/05/2015

(54) Title of the invention : HEAVY ALKYLBENZENE PRODUCTION THROUGH OLIGOMERIZATION

(51) International classification :C10G50/00,C07C2/06,C07C15/107
(31) Priority Document No :13/428559
(32) Priority Date :23/03/2012
(33) Name of priority country :U.S.A.
(86) International Application No :PCT/US2013/030366
Filing Date :12/03/2013
(87) International Publication No :WO 2013/142137
(61) Patent of Addition to Application Number :NA
Filing Date :NA
(62) Divisional to Application Number :NA
Filing Date :NA

(71)**Name of Applicant :**
1)UOP LLC
Address of Applicant :25 East Algonquin Road P. O. Box 5017 Des Plaines Illinois 60017 5017 U.S.A.
(72)**Name of Inventor :**
1)BOZZANO Andrea G.
2)BRICKER Jeffery C.
3)GLOVER Bryan K.

(57) Abstract :
A process for producing heavy alkyl aromatics is presented. The process utilizes low molecular weight hydrocarbons for generating larger alkyl groups. The hydrocarbons can be generated from a variety of sources including Fischer Tropsch liquids. The process includes oligomerization of low molecular weight olefins to larger olefins. The larger olefins are passed to an alkylation reactor to alkylate aromatic compounds.

No. of Pages : 11 No. of Claims : 10

(12) PATENT APPLICATION PUBLICATION
(19) INDIA
(22) Date of filing of Application :07/08/2014
(21) Application No.6656/DELNP/2014 A
(43) Publication Date : 22/05/2015

(54) Title of the invention : PRODUCTION OF ALKANE SULFONATES

(51) International classification :C07C309/20,C07C303/06
(31) Priority Document No :13/427204
(32) Priority Date :22/03/2012
(33) Name of priority country :U.S.A.
(86) International Application No :PCT/US2013/030310
Filing Date :12/03/2013
(87) International Publication No :WO 2013/142127
(61) Patent of Addition to Application Number :NA
Filing Date :NA
(62) Divisional to Application Number :NA
Filing Date :NA

(71)**Name of Applicant :**
1)UOP LLC
Address of Applicant :25 East Algonquin Road P. O. Box 5017 Des Plaines Illinois 60017 5017 U.S.A.
(72)**Name of Inventor :**
1)RILEY Mark G.
2)SOHN Stephen W.

(57) Abstract :
A process for the production of olefin sulfonates is presented. The process comprising generating olefins from normal alkanes through a dehydrogenation unit to produce a mixture of alkanes and alkenes. The mixture is sulfonated to react the olefins and generate olefin sulfonates. The olefin sulfonates are separated from the normal alkanes to produce a product stream with the normal alkanes recycled to the dehydrogenation unit.

No. of Pages : 13 No. of Claims : 10

(12) PATENT APPLICATION PUBLICATION
(19) INDIA
(22) Date of filing of Application :12/08/2014
(21) Application No.6753/DELNP/2014 A
(43) Publication Date : 22/05/2015

(54) Title of the invention : SUPERLUMINAL ANTENNA

(51) International classification :H01Q1/00
(31) Priority Document No :13/368200
(32) Priority Date :07/02/2012
(33) Name of priority country :U.S.A.
(86) International Application No :PCT/US2013/024769
Filing Date :05/02/2013
(87) International Publication No :WO 2013/119566
(61) Patent of Addition to Application Number :NA
Filing Date :NA
(62) Divisional to Application Number :NA
Filing Date :NA

(71)**Name of Applicant :**
1)LOS ALAMOS NATIONAL SECURITY LLC
Address of Applicant :Los Alamos National Laboratory P.o. Box 1663 Ms A187 Los Alamos NM 87545 U.S.A.
(72)**Name of Inventor :**
1)SINGLETON John
2)EARLEY Lawrence M.
3)KRAWCZYK Frank L.
4)POTTER James M.
5)ROMERO William P.
6)WANG Zhi fu

(57) Abstract :
A superluminal antenna element integrates a balun element to better impedance match an input cable or waveguide to a dielectric radiator element thus preventing stray reflections and consequent undesirable radiation. For example a dielectric housing material can be used that has a cutout area. A cable can extend into the cutout area. A triangular conductor can function as an impednace transition. An additional cylindrical element functions as a sleeve balun to better impedance match the radiator element to the cable.

No. of Pages : 19 No. of Claims : 17

(12) PATENT APPLICATION PUBLICATION
(19) INDIA
(22) Date of filing of Application :12/08/2014
(21) Application No.6754/DELNP/2014 A
(43) Publication Date : 22/05/2015

(54) Title of the invention : COORDINATED CONTROL OF A FLOATING WIND TURBINE

(51) International classification :F03D7/04,F03D7/02
(31) Priority Document No :PA 2012 70038
(32) Priority Date :23/01/2012
(33) Name of priority country :Denmark
(86) International Application No :PCT/DK2013/050004
Filing Date :09/01/2013
(87) International Publication No :WO 2013/110276
(61) Patent of Addition to Application Number :NA
Filing Date :NA
(62) Divisional to Application Number :NA
Filing Date :NA

(71)**Name of Applicant :**
1)MHI VESTAS OFFSHORE WIND A/S
Address of Applicant :Dusager 4 DK 8200 Aarhus N Denmark
(72)**Name of Inventor :**
1)COUCHMAN Ian
2)BOWYER Robert

(57) Abstract :
The present invention relates to methods apparatus and computer program products for coordinating the control of a floating wind turbine (101) between a wind turbine controller (111) and a platform controller (110). One or more wind turbine control systems and/or one or more platform control systems may be altered based on said coordinated control of said floating wind turbine (101).

No. of Pages : 39 No. of Claims : 35

(12) PATENT APPLICATION PUBLICATION
(19) INDIA
(22) Date of filing of Application :12/08/2014
(21) Application No.6755/DELNP/2014 A
(43) Publication Date : 22/05/2015

(54) Title of the invention : LOCKING UNIT FOR A VEHICLE SEAT

(51) International classification :B60N2/36,B60N2/433,E05B65/12
(31) Priority Document No :10 2012 015 854.8
(32) Priority Date :01/06/2012
(33) Name of priority country :Germany
(86) International Application No :PCT/EP2013/060235
Filing Date :17/05/2013
(87) International Publication No :WO 2013/178488
(61) Patent of Addition to Application Number :NA
Filing Date :NA
(62) Divisional to Application Number :NA
Filing Date :NA

(71)**Name of Applicant :**
1)JOHNSON CONTROLS GMBH
Address of Applicant :Industriestrasse 20 30 51399 Burscheid Germany
(72)**Name of Inventor :**
1)HANDL Patrick

(57) Abstract :
The invention relates to a locking unit (10) for a vehicle seat (1) comprising a pivotally mounted rotary latch (20) for locking to a bolt (12) and a detent (30) which secures the locking unit (10) in the locked state in the event of a crash in which the rotary latch (20) supports itself on a first contact point against the detent (30). Said rotary latch (20) also supports itself on a second contact point in the event of a deformation of said latch (20) in the event of a crash the second contact point being provided on the detent (30).

No. of Pages : 23 No. of Claims : 10

(12) PATENT APPLICATION PUBLICATION
(19) INDIA
(22) Date of filing of Application :12/08/2014
(21) Application No.6756/DELNP/2014 A
(43) Publication Date : 22/05/2015

(54) Title of the invention : MICROFRACTURE PICK

(51) International classification :A61B17/16
(31) Priority Document No :61/591980
(32) Priority Date :29/01/2012
(33) Name of priority country :U.S.A.
(86) International Application No :PCT/US2013/021400
Filing Date :14/01/2013
(87) International Publication No :WO 2013/112308
(61) Patent of Addition to Application Number :NA
Filing Date :NA
(62) Divisional to Application Number :NA
Filing Date :NA

(71)**Name of Applicant :**
1)SMITH & NEPHEW INC.
Address of Applicant :1450 Brooks Road Memphis Tennessee 38116 U.S.A.
(72)**Name of Inventor :**
1)ROGERS Jon Paul
2)CALLAHAN Timothy P.

(57) Abstract :
A microfracture pick having features configured to aid a user in advancing the microfracture pick through bone. The microfracture pick has an elongated member with a proximal end a distal end a sharp optionally angled tip disposed adjacent the distal end of the elongated member and at least one engaging feature disposed at one or more locations on the elongated member for engaging a complementary feature of a strike instrument. By striking an impact surface of the strike instrument the user can to produce a force that is translated via the elongated member of the microfracture pick through the tip thereby making penetration of the tip through the bone more effective.

No. of Pages : 33 No. of Claims : 17

(12) PATENT APPLICATION PUBLICATION
(21) Application No.6668/DELNP/2014 A
(19) INDIA
(22) Date of filing of Application :08/08/2014
(43) Publication Date : 22/05/2015

(54) Title of the invention : METHOD AND APPARATUS FOR PRODUCING GAS

(51) International classification :C25B1/06,C25B11/03
(31) Priority Document No :2012/00696
(32) Priority Date :10/02/2012
(33) Name of priority country :South Africa
(86) International Application No :PCT/IB2013/051109
Filing Date :11/02/2013
(87) International Publication No :WO 2013/118104
(61) Patent of Addition to Application Number :NA
Filing Date :NA
(62) Divisional to Application Number :NA
Filing Date :NA

(71)**Name of Applicant :**
1)HYDROX HOLDINGS LIMITED
Address of Applicant :32 Ida Street Menlyn 0181 Pretoria South Africa
(72)**Name of Inventor :**
1)ANAGNOSTOPOULOS George

(57) Abstract :
This invention relates to electrolysis apparatus 10 adapted to produce oxygenated and hydrogenated fluid formed during the electrolysis of an electrolytic solution passed into the apparatus 10. The apparatus 10 comprises a first and second outer end members 12 and 14 and first and second permeable electrodes 16 and 18 spaced from one another. Each permeable electrode 16 and 18 are of a foraminous or perforated material. An inlet chamber 20 has two inlets 26 for allowing electrolytic solution to pass into said chamber 20. The apparatus 10 also has an oxygen outlet 28 as well as a hydrogen outlet 30. The flow of electrolytic solution through the permeable electrodes 16 and 18 will carry with it the oxygen and hydrogen gasses generated on the positive and negative (first and second) permeable electrodes respectively.

No. of Pages : 27 No. of Claims : 22

(12) PATENT APPLICATION PUBLICATION
(21) Application No.6670/DELNP/2014 A
(19) INDIA
(22) Date of filing of Application :08/08/2014
(43) Publication Date : 22/05/2015

(54) Title of the invention : AIR FILTER ARRANGEMENT AND CONNECTING DUCT

(51) International classification :F02M35/024
(31) Priority Document No :12501938
(32) Priority Date :01/03/2012
(33) Name of priority country :Sweden
(86) International Application No :PCT/SE2013/050162
Filing Date :25/02/2013
(87) International Publication No :WO 2013/129998
(61) Patent of Addition to Application Number :NA
Filing Date :NA
(62) Divisional to Application Number :NA
Filing Date :NA

(71)**Name of Applicant :**
1)SCANIA CV AB
Address of Applicant :S 151 87 Sdertlje Sweden
(72)**Name of Inventor :**
1)PETTERSSON Emil

(57) Abstract :
The invention relates to an air filter arrangement comprising a filter housing (10) for connection to a duct (80) for a combustion engine. According to the invention the filter housing (10) has a cover (30) for closing a top aperture of the filter housing (10) an engine air outlet (40) on the cover (30) and a flexible pipe section (42) on the engine air outlet for the connection to the duct to allow the cover (30) to be removed from the top aperture and a filter unit to be introduced into and taken out from the filter housing (10).

No. of Pages : 13 No. of Claims : 5

(12) PATENT APPLICATION PUBLICATION
(19) INDIA
(22) Date of filing of Application :12/08/2014
(21) Application No.6766/DELNP/2014 A
(43) Publication Date : 22/05/2015

(54) Title of the invention : METHODS AND APPARATUS FOR MANAGING NETWORK TRAFFIC

(51) International classification :G06F15/173
(31) Priority Document No :61/590279
(32) Priority Date :24/01/2012
(33) Name of priority country :U.S.A.
(86) International Application No :PCT/US2013/022773
Filing Date :23/01/2013
(87) International Publication No :WO 2013/112606
(61) Patent of Addition to Application Number :NA
Filing Date :NA
(62) Divisional to Application Number :NA
Filing Date :NA

(71)**Name of Applicant :**
1)L3 COMMUNICATIONS CORPORATION
Address of Applicant :600 Third Avenue New York NY 10016 U.S.A.
(72)**Name of Inventor :**
1)STREBE Matthew
2)WHITTENTON Nathan V.
3)COLLINS Timothy C.

(57) Abstract :
Methods apparatus and computer readable storage media reduce or eliminate network traffic meeting criteria. In some aspects network traffic transmitted by one or more source nodes to one or more destination nodes may comprise a denial of service attack against the destination node(s). At least a portion of the denial of service attack traffic may be reduced or eliminated with the disclosed methods and apparatus. In one aspect a method of managing undesirable network traffic transmitted from a source node to a destination node over a communications network includes receiving a notification of a routing rule change authenticating the notification determining a network routing rule based on the notification applying the network routing rule determining a network path toward the source node determining an entity based on the network path and transmitting a notification of the routing rule change to the entity.

No. of Pages : 75 No. of Claims : 39

(12) PATENT APPLICATION PUBLICATION
(21) Application No.6768/DELNP/2014 A
(19) INDIA
(22) Date of filing of Application :12/08/2014
(43) Publication Date : 22/05/2015

(54) Title of the invention : BASE PROTECTED OLIGONUCLEOTIDE

(51) International classification :C07H19/073,C07H21/04
(31) Priority Document No :2012033429
(32) Priority Date :17/02/2012
(33) Name of priority country :Japan
(86) International Application No :PCT/JP2013/053769
Filing Date :15/02/2013
(87) International Publication No :WO 2013/122236
(61) Patent of Addition to Application Number :NA
Filing Date :NA
(62) Divisional to Application Number :NA
Filing Date :NA

(71)**Name of Applicant :**
1)AJINOMOTO CO. INC.
Address of Applicant :15 1 Kyobashi 1 chome Chuo ku Tokyo 1048315 Japan
(72)**Name of Inventor :**
1)HIRAI Kunihiro
2)KATAYAMA Satoshi
3)TORII Takayoshi
4)NAKAYA Ryotaro
5)TAKAHASHI Daisuke

(57) Abstract :
Provided is a protected nucleotide for elongation that makes it possible to realize a method for producing oligonucleotides by the phosphoramidite process that allows purification to be conducted by liquid liquid extraction efficiently and at high yield. It was discovered that this can be achieved by using a specific base protected oligonucleotide and/or a specific aromatic protected oligonucleotide containing a 3 position branched chain.

No. of Pages : 199 No. of Claims : 21

(12) PATENT APPLICATION PUBLICATION
(21) Application No.6769/DELNP/2014 A
(19) INDIA
(22) Date of filing of Application :12/08/2014
(43) Publication Date : 22/05/2015

(54) Title of the invention : RECEIVER TRANSMISSION SYSTEM METHOD FOR RECEIVING POLARIZATION MULTIPLEXED LIGHT SIGNAL NON TEMPORARY COMPUTER READABLE MEDIUM STORING RECEIVER CONTROL PROGRAM

(51) International classification	:H04B10/63,H04J11/00,H04J14/00
(31) Priority Document No	:2012046560
(32) Priority Date	:02/03/2012
(33) Name of priority country	:Japan
(86) International Application No	:PCT/JP2013/001279
Filing Date	:01/03/2013
(87) International Publication No	:WO 2013/128944
(61) Patent of Addition to Application Number	:NA
Filing Date	:NA
(62) Divisional to Application Number	:NA
Filing Date	:NA

(71)**Name of Applicant :**
1)NEC CORPORATION
Address of Applicant :7 1 Shiba 5 chome Minato ku Tokyo 1088001 Japan
(72)**Name of Inventor :**
1)SUZUKI Kouichi

(57) Abstract :
The present invention provides a receiver a transmission system a method for receiving a polarization multiplexed light signal and a non temporary computer readable medium storing a receiver control program in which reception characteristics during digital coherent transmission can be stabilized. In the receiver (2) a polarization multiplexed light signal which has been polarization scrambled is inputted into a reception front end (10) and the reception front end (10) subjects the inputted polarization multiplexed light signal to polarization separation and converts each of the separated signals into a quantization signal. The digital signal processor (14) samples the quantization signal and demodulates the quantization signal using a polarization separation digital signal processing algorithm and outputs a demodulated signal. If the fluctuations in the phase and the amplitude of the demodulated signal are greater than a predetermined value the control circuit (15) stops the processing performed by the digital signal processor (14) using the polarization separation digital signal processing algorithm and changes the initial value of the filter coefficient and then starts the processing performed using the polarization separation digital signal processing algorithm.

No. of Pages : 49 No. of Claims : 27

(12) PATENT APPLICATION PUBLICATION
(21) Application No.6676/DELNP/2014 A
(19) INDIA
(22) Date of filing of Application :08/08/2014
(43) Publication Date : 22/05/2015

(54) Title of the invention : POWER SUPPLY AND DEMAND CONTROL DEVICE AND METHOD FOR CONTROLLING POWER SUPPLY AND DEMAND

(51) International classification :H02J3/46,H02J3/00,H02J13/00
(31) Priority Document No :2012037895
(32) Priority Date :23/02/2012
(33) Name of priority country :Japan
(86) International Application No :PCT/JP2013/054388
Filing Date :21/02/2013
(87) International Publication No :WO 2013/125648
(61) Patent of Addition to Application Number :NA
Filing Date :NA
(62) Divisional to Application Number :NA
Filing Date :NA

(71)**Name of Applicant :**
1)KABUSHIKI KAISHA TOSHIBA
Address of Applicant :1 1 Shibaura 1 chome Minato ku Tokyo 1058001 Japan
(72)**Name of Inventor :**
1)OBARA Reiko
2)NODA Hideki
3)IWABUCHI Kazunori
4)KOBAYASHI Takenori
5)ISOGAI Taichi
6)YAMADA Takahiro

(57) Abstract :
A power supply and demand control device according to this embodiment comprises: a demand source information collection unit (1) for collecting report information relating to power consumption by a demand source; a demand amount calculation unit (2) for calculating a demand amount by totalizing power consumption by the demand source on the basis of said report information; a supply amount calculation unit (3) for calculating the supply amount allocated to the demand source by determining supply demand balance on the basis of the demand amount calculated by said demand amount calculation unit (2) and the supply amount based on a load limit command from a load dispatching office; and a supply command unit (4) for sending a supply command to said demand source on the basis of the supply amount calculated by said supply amount calculation unit (3).

No. of Pages : 29 No. of Claims : 10

(12) PATENT APPLICATION PUBLICATION
(21) Application No.6677/DELNP/2014 A
(19) INDIA
(22) Date of filing of Application :08/08/2014
(43) Publication Date : 22/05/2015

(54) Title of the invention : USPL FSO LASERCOM POINT TO POINT AND POINT TO MULTIPOINT OPTICAL WIRELESS COMMUNICATION

(51) International classification :H04B10/2575
(31) Priority Document No :61/584666
(32) Priority Date :09/01/2012
(33) Name of priority country :U.S.A.
(86) International Application No :PCT/US2013/020892
Filing Date :09/01/2013
(87) International Publication No :WO 2013/106475
(61) Patent of Addition to Application Number :NA
Filing Date :NA
(62) Divisional to Application Number :NA
Filing Date :NA

(71)**Name of Applicant :**
1)ATTOCHRON LLC
Address of Applicant :P.O. Box 1036 Lexington VA 24450 U.S.A.
(72)**Name of Inventor :**
1)CHAFFEE Tom
2)SZAJOWSKI Paul A.
3)KIM Isaac
4)BRAGA Alexandre

(57) Abstract :
Enhancements in optical beam propagation performance can be realized through the utilization of ultra short pulse laser (USPL) sources for laser transmit platforms which are can be used throughout the telecommunication network infrastructure fabric. One or more of the described and illustrated features of USPL free space optical (USPL FSO) laser communications can be used in improving optical propagation through the atmosphere for example by mitigating optical attenuation and scintillation effects thereby enhancing effective system availability as well as link budget considerations as evidenced through experimental studies and theoretical calculations between USPL and fog related atmospheric events.

No. of Pages : 103 No. of Claims : 21

(12) PATENT APPLICATION PUBLICATION
(19) INDIA
(22) Date of filing of Application :08/08/2014
(21) Application No.6678/DELNP/2014 A
(43) Publication Date : 22/05/2015

(54) Title of the invention : SOLAR ARRAY MODULE SYSTEM FOR GENERATING ELECTRIC POWER

(51) International classification :H01L31/05,H01L31/042
(31) Priority Document No :61/617771
(32) Priority Date :30/03/2012
(33) Name of priority country :U.S.A.
(86) International Application No :PCT/IL2013/050291
Filing Date :30/03/2013
(87) International Publication No :WO 2013/144963
(61) Patent of Addition to Application Number :NA
Filing Date :NA
(62) Divisional to Application Number :NA
Filing Date :NA

(71)**Name of Applicant :**
1)SOLARWAT LTD.
Address of Applicant :100 Hapalmach Street 40500 Even Yehuda Israel
(72)**Name of Inventor :**
1)WATELMACHER Boris
2)PAZ Gabi

(57) Abstract :
A modular solar panel system facilitated to maximize the power generation from a solar module configured to maximize power generation from a plurality of solar cells under conditions of partial shade or light obstruction. The modular solar panel system includes a crisscross network configuration arrays wherein the solar cells are often subjected to at least partial shading and wherein the present invention provides innovative configurations to minimize the damage inflicted by the shadows.

No. of Pages : 63 No. of Claims : 18

(12) PATENT APPLICATION PUBLICATION
(21) Application No.6777/DELNP/2014 A
(19) INDIA
(22) Date of filing of Application :12/08/2014
(43) Publication Date : 22/05/2015

(54) Title of the invention : EVOLUTIONARY ALGORITHMS FOR GEOGRAPHIC LOAD BALANCING USING A DISTRIBUTED ANTENNA SYSTEM

(51) International classification :H04W4/00
(31) Priority Document No :61/600530
(32) Priority Date :17/02/2012
(33) Name of priority country :U.S.A.
(86) International Application No :PCT/US2013/026647
Filing Date :19/02/2013
(87) International Publication No :WO 2013/123494
(61) Patent of Addition to Application Number :NA
Filing Date :NA
(62) Divisional to Application Number :NA
Filing Date :NA

(71)**Name of Applicant :**
1)DALI SYSTEMS CO. LTD.
Address of Applicant :Maples Corporate Services Limited P.O. Box 309 Ugland House South Church Street George Town KY1 1104 Cayman Island
(72)**Name of Inventor :**
1)STAPLETON Shawn Patrick
2)HEJAZI Seyed Amin

(57) Abstract :
Methods and apparatuses are presented for balancing non uniformly distributed network traffic in a wireless communications system having a plurality of digital remote units (DRUs). In some embodiments a method comprises partitioning the plurality of DRUs into a plurality of DRU sectors and dynamically repartitioning the plurality of DRU sectors depending on traffic conditions in at least one of the DRU sectors such that the repartitioning satisfies at least one of a soft capacity constraint or a hard capacity constraint. The dynamic repartitioning may be based on at least one optimization algorithm

No. of Pages : 42 No. of Claims : 20

(12) PATENT APPLICATION PUBLICATION
(21) Application No.6778/DELNP/2014 A
(19) INDIA
(22) Date of filing of Application :12/08/2014
(43) Publication Date : 22/05/2015

(54) Title of the invention : PRODUCTION METHOD FOR HYDROXY CARBOXYLIC ACID AMIDE COMPOUND AND NOVEL ARYLBORONIC ACID COMPOUND

(51) International classification	:C07C231/02,B01J31/02,C07C235/06
(31) Priority Document No	:2012032400
(32) Priority Date	:17/02/2012
(33) Name of priority country	:Japan
(86) International Application No	:PCT/JP2013/053500
Filing Date	:14/02/2013
(87) International Publication No	:WO 2013/122130
(61) Patent of Addition to Application Number	:NA
Filing Date	:NA
(62) Divisional to Application Number	:NA
Filing Date	:NA

(71)**Name of Applicant :**
1)NATIONAL UNIVERSITY CORPORATION NAGOYA UNIVERSITY
Address of Applicant :1 Furo cho Chikusa ku Nagoya shi Aichi 4648601 Japan
(72)**Name of Inventor :**
1)ISHIHARA Kazuaki
2)SAKAKURA Akira

(57) Abstract :
Provided is a production method for a hydroxy carboxylic acid amide compound wherein a hydroxy carboxylic acid amide compound is obtained by performing an amide condensation reaction between an a or hydroxy carboxylic acid compound and an amine compound using as a catalyst an alkylboronic acid represented by RB(OH) (in the formula R is a primary alkyl group) or the arylboronic acid compound in formula (1) (in formula (1): (CH)NRR is bound to either the ortho position or the para position; n is either 1 or 2; R is a tertiary alkyl group; R is either a secondary or tertiary alkyl group; and NRR may form a ring). [Formula (1)]

No. of Pages : 39 No. of Claims : 8

(12) PATENT APPLICATION PUBLICATION
(19) INDIA
(22) Date of filing of Application :08/08/2014
(21) Application No.6685/DELNP/2014 A
(43) Publication Date : 22/05/2015

(54) Title of the invention : INTERFACE DEVICE FOR VIDEO CAMERAS

(51) International classification :H04N7/18
(31) Priority Document No :MI2012A000491
(32) Priority Date :27/03/2012
(33) Name of priority country :Italy
(86) International Application No :PCT/IB2013/052381
Filing Date :26/03/2013
(87) International Publication No :WO 2013/144826
(61) Patent of Addition to Application Number :NA
Filing Date :NA
(62) Divisional to Application Number :NA
Filing Date :NA

(71)**Name of Applicant :**
1)VIDEOTEC S.P.A
Address of Applicant :Via Friuli 6 I 36015 Schio (VI) Italy
(72)**Name of Inventor :**
1)CAMPANA Ottavio

(57) Abstract :
The present invention relates to an interface device (3) for video surveillance stations of the type comprising a video camera (1) and a positioning unit (2) for the video camera (1). The device (3) comprises a first port (403) for the connection to a remote terminal (4) a second port (503) for the connection to a video camera (1) a third port (603) for the connection to a positioning unit (2) for the video camera (1) and a microprocessor circuit (703) operatively connected to said three ports for transferring the commands received through the first port (403) to the second port (503) and/or to the third port (603). The microprocessor circuit (703) communicates with the video camera (1) and with the remote terminal (4) through two networks (103 203) separated at physical or logical level such that only the microprocessor circuit (703) is able to send the data received from a remote terminal (4) to a video camera (1) or to a positioning unit (2) and vice versa while a remote terminal (4) is not able to communicate with a video camera (1) or with the a positioning unit (2).

No. of Pages : 37 No. of Claims : 19

(12) PATENT APPLICATION PUBLICATION
(21) Application No.6687/DELNP/2014 A
(19) INDIA
(22) Date of filing of Application :08/08/2014
(43) Publication Date : 22/05/2015

(54) Title of the invention : A MOBILE DISINFECTION UNIT FOR DISINFECTING A GIVEN FACILITY OR EQUIPMENT AND A METHOD OF USING SAID UNIT

(51) International classification :A61L2/20,A61L9/015
(31) Priority Document No :12152733.7
(32) Priority Date :26/01/2012
(33) Name of priority country :EPO
(86) International Application No :PCT/EP2013/051493
Filing Date :25/01/2013
(87) International Publication No :WO 2013/110782
(61) Patent of Addition to Application Number :NA
Filing Date :NA
(62) Divisional to Application Number :NA
Filing Date :NA

(71)**Name of Applicant :**
1)O3 TECHNOLOGY RESEARCH & DEVELOPMENT AB
Address of Applicant :Terminalgatan 2 S 235 39 Vellinge Sweden
(72)**Name of Inventor :**
1)ARLEMARK Jan

(57) Abstract :
A method for disinfecting a given facility or equipment and a mobile disinfection unit for use in the method. The present invention relates to a method of disinfecting a given facility or equipment such as a room apparatus container or vehicle and a mobile disinfection unit (1) for use in the method. The method comprises a treatment step arranged for adding ozone and steam/water droplets into the air of the facility or equipment means (25) for continuously detecting the ozone concentration in the facility or equipment and a removal step arranged for removing residual ozone and any contaminates from the facility or equipment when a predefined ozone concentration has been reached and maintained for a specific time interval.

No. of Pages : 40 No. of Claims : 16

(12) PATENT APPLICATION PUBLICATION
(19) INDIA
(22) Date of filing of Application :08/08/2014
(21) Application No.6688/DELNP/2014 A
(43) Publication Date : 22/05/2015

(54) Title of the invention : POLAR MODULATION

(51) International classification :H04L27/36
(31) Priority Document No :12154767.3
(32) Priority Date :09/02/2012
(33) Name of priority country :EPO
(86) International Application No :PCT/EP2013/052542
Filing Date :08/02/2013
(87) International Publication No :WO 2013/117698
(61) Patent of Addition to Application Number :NA
Filing Date :NA
(62) Divisional to Application Number :NA
Filing Date :NA

(71)**Name of Applicant :**
1)ERICSSON MODEMS SA
Address of Applicant :Impasse Colombelle 8 B CH 1218 Le Grand Saconnex Switzerland
(72)**Name of Inventor :**
1)NILSSON Magnus
2)V„„N„NEN Paavo
3)VILHONEN Sami Tapani

(57) Abstract :
A modulator (100) comprises a polar generation stage (120) arranged for generating an amplitude component and a phase component of a modulation signal a differentiator stage (150) arranged for generating a differentiated phase component by differentiating the phase component; and an event detection stage (170) arranged for detecting a high bandwidth event by detecting at least one of the amplitude component and the differentiated phase component meeting an event criterion. An inversion stage (130) is arranged for generating a modified amplitude component by inverting the amplitude component in response to detecting the high bandwidth event. A phase offset stage (150) is arranged for generating a modified differentiated phase component by in response to detecting the high bandwidth event adding to the differentiated phase component a phase offset having a magnitude of 180 degrees and a sign opposite to a sign of the differentiated phase component. An amplitude modulation stage (300) is arranged for employing the modified amplitude component to modulate the amplitude of a carrier signal and a phase modulation stage (200) is arranged for employing the modified differentiated phase component to modulate the frequency of the carrier signal.

No. of Pages : 44 No. of Claims : 16

(12) PATENT APPLICATION PUBLICATION
(19) INDIA
(22) Date of filing of Application :12/08/2014
(21) Application No.6780/DELNP/2014 A
(43) Publication Date : 22/05/2015

(54) Title of the invention : PERSONAL ELECTRONIC TARGET VISION SYSTEM DEVICE AND METHOD

(51) International classification :G02B27/01,A61F9/08,G01S13/87
(31) Priority Document No :13/356872
(32) Priority Date :24/01/2012
(33) Name of priority country :U.S.A.
(86) International Application No :PCT/CA2013/050043
Filing Date :23/01/2013
(87) International Publication No :WO 2013/110190
(61) Patent of Addition to Application Number :NA
Filing Date :NA
(62) Divisional to Application Number :NA
Filing Date :NA

(71)**Name of Applicant :**
1)ACCIPITER RADAR TECHNOLOGIES INC.
Address of Applicant :576 Hwy. #20 West Fenwick Ontario L0S 1C0 Canada
(72)**Name of Inventor :**
1)NOHARA Timothy J.

(57) Abstract :
A personal electronic target vision system displays targets to one or more users relative to each user s respective location. With a personal electronic vision device carried by a user targets in the field of view of the user are rendered in real time to the user so that the user can visualize where the targets are relative to him in an orientation analogous to unaided human vision. Each electronic vision device exchanges target selection information to a target vision server which returns to the electronic vision device the corresponding selected target location information for rendering to the user. The target selection information for a given user accounts for the user s changing user view geometry so that the selected targets returned and rendered are in accordance with the user s changing viewpoint. The target vision server queries a target information server in order to access filter and provide the real time target location information required by each user s electronic vision device. A surveillance system consisting of any number and types of sensors and target tracking systems which are separate from and independent of the users provide the target information server with target location information. Targets handled by the personal electronic target vision system are dynamic in nature and include all types such as aircraft birds planets space objects vessels vehicles animals and persons. System elements can reside in the Cloud and the personal electronic vision device can be implemented as an application on a mobile device.

No. of Pages : 44 No. of Claims : 105

(12) PATENT APPLICATION PUBLICATION
(19) INDIA
(22) Date of filing of Application :02/01/2015
(21) Application No.43/DELNP/2015 A
(43) Publication Date : 22/05/2015

(54) Title of the invention : PLANT CONTROL MONITORING SYSTEM

(51) International classification :G05B23/02
(31) Priority Document No :NA
(32) Priority Date :NA
(33) Name of priority country :NA
(86) International Application No :PCT/JP2012/069825
Filing Date :03/08/2012
(87) International Publication No :WO 2014/020754
(61) Patent of Addition to Application Number :NA
Filing Date :NA
(62) Divisional to Application Number :NA
Filing Date :NA

(71)**Name of Applicant :**
1)TOSHIBA MITSUBISHI ELECTRIC INDUSTRIAL SYSTEMS CORPORATION
Address of Applicant :3 1 1 Kyobashi Chuo ku Tokyo 1040031 Japan
(72)**Name of Inventor :**
1)WANG Yun
2)NOJIMA Akira
3)FUJIEDA Hiroyuki

(57) Abstract :
Provided is a plant control monitoring system which is capable of reducing communication traffic between a client and a server and of achieving improvement of processing speed. To this end in the plant control monitoring system are provided: a server side storage unit which is disposed in a server and which stores operation right processing information for a machine group in an operation monitoring screen of a client; client side storage units which are disposed in clients and which store replicas of the operation right processing information of the server side storage unit; and operation right processing units which are disposed in the clients so as to correspond with each of the operation monitoring screens and which perform operation right processing on the basis of the operation right processing information of the client side storage units. Then operation right processing information for each client is stored in a global variable storage unit of the client side storage unit and the operation right processing information for each operation screen is stored in a local variable storage unit of the respective client side storage unit.

No. of Pages : 49 No. of Claims : 6

(12) PATENT APPLICATION PUBLICATION
(21) Application No.4546/DELNP/2013 A
(19) INDIA
(22) Date of filing of Application :22/05/2013
(43) Publication Date : 22/05/2015

(54) Title of the invention : METHOD FOR MEASURING HEALTH INDEX OF PLANT IN WHICH STATE OF LOWER COMPONENT IS REFLECTED AND COMPUTER READABLE STORAGE MEDIUM IN WHICH PROGRAM FOR PERFORMING THE METHOD IS STORED

(51) International classification :G05B23/00,G06F19/00
(31) Priority Document No :10-2011-0092080
(32) Priority Date :09/09/2011
(33) Name of priority country :Republic of Korea
(86) International Application No :PCT/KR2012/004059
Filing Date :23/05/2012
(87) International Publication No :WO 2013/035964
(61) Patent of Addition to Application Number :NA
Filing Date :NA
(62) Divisional to Application Number :NA
Filing Date :NA

(71)**Name of Applicant :**
1)BNF TECHNOLOGY INC.
Address of Applicant :#556 Yongsan-dong, Yuseong-gu Daejeon 305-500 Republic of Korea
(72)**Name of Inventor :**
1)SEO Ho Joon

(57) Abstract :
The present invention relates to a method of measuring a health index of a plant in which a condition of a lower level component is reflected and a computer-readable storage medium in which a program to perform the method is stored in which the condition of the plant is more easily and conveniently monitored based on only the health index of the uppermost level layer, in a case in which an actual measurement value of a certain component of a certain lower level layer deviates from a normal range, the actual measurement value is reflected in the health index, and, in a case in which a trip possibility of the plant due to change of an actual measurement value of a specific component is low although the actual measurement value of the component temporarily deviates from a normal range, the actual measurement value of the component has a minimal influence on the health index.

No. of Pages : 23 No. of Claims : 6

(12) PATENT APPLICATION PUBLICATION
(19) INDIA
(22) Date of filing of Application :12/08/2014
(21) Application No.6770/DELNP/2014 A
(43) Publication Date : 22/05/2015

(54) Title of the invention : 2 4 D SALINE SOLUBLE GRANULE AND PREPARATION METHOD THEREFOR

(51) International classification :A01N25/12,A01N39/04,A01P13/00
(31) Priority Document No :201210016942.X
(32) Priority Date :19/01/2012
(33) Name of priority country :China
(86) International Application No :PCT/CN2012/000582
Filing Date :02/05/2012
(87) International Publication No :WO 2013/106972
(61) Patent of Addition to Application Number :NA
Filing Date :NA
(62) Divisional to Application Number :NA
Filing Date :NA

(71)**Name of Applicant :**
1)SHANDONG WEIFANG RAINBOW CHEMICAL CO. LTD.
Address of Applicant :No.600 Haiyuanstreet Binhai Economic Development Area Weifang Shandong 262737 China
(72)**Name of Inventor :**
1)SUN Guoqing
2)HOU Yongsheng
3)WU Yong
4)XU Liwei
5)CHEN Shuai

(57) Abstract :
Xanthium sibiricumDisclosed is a 2 4 D saline soluble granule comprising components with the following weight percentage: 5 80% 2 4 D salt (calculated as 2 4 D acid) water soluble packing residue. The 2 4 D saline soluble granule is excellent at controlling annual or perennial gramineae weeds and certain broadleaved weeds in soybean fields and other Leguminosae fields such as amaranth knotweed goosefoot nightshade barnyard grass green bristle grass crabgrass glutinous millet etc. The preparation is an environmentally friendly dosage form and has the following advantages compared with conventional emulsifiable concentrates wettable powder and suspension concentrates: free of organic solvents and dust and easy to measure. Also disclosed is a preparation method therefor. The method process is simple economical and safe; no dangerous chemicals are used during the whole production process so the process is easy to control and operate and the safety coefficient is high.

No. of Pages : 8 No. of Claims : 7

(12) PATENT APPLICATION PUBLICATION
(19) INDIA
(22) Date of filing of Application :07/08/2014
(21) Application No.6658/DELNP/2014 A
(43) Publication Date : 22/05/2015

(54) Title of the invention : MEDIUM PROCESSING DEVICE

(51) International classification :G07D9/00,B65H5/28,B65H29/51
(31) Priority Document No :2012063271
(32) Priority Date :21/03/2012
(33) Name of priority country :Japan
(86) International Application No :PCT/JP2012/082396
Filing Date :13/12/2012
(87) International Publication No :WO 2013/140683
(61) Patent of Addition to Application Number :NA
Filing Date :NA
(62) Divisional to Application Number :NA
Filing Date :NA

(71)**Name of Applicant :**
1)OKI ELECTRIC INDUSTRY CO. LTD.
Address of Applicant :1 7 12 Toranomon Minato ku Tokyo 1058460 Japan
(72)**Name of Inventor :**
1)IWATSUKI Kei

(57) Abstract :
A medium processing device configured so as to be capable of stable operation. A temporary holding unit (15) identifies that a tape position is at the termination end section during the winding operation of a drum (23) by detecting a light shielding area (SA) provided in the termination end section of an inner tape (40) using a tape sensor (45); and stops the rotation thereof. In addition the temporary holding unit (15) can maintain an outer tape (30) in a longer state than the inner tape (40) even if the outer tape (30) has been trimmed by configuring the tape length for the outer tape (30) to be longer by an additional length (LE) than the inner tape (40). As a result the temporary holding unit (15) is capable of detecting the light shielding area (SA) on the inner tape (40) by using the tape sensor (45) and of stopping the rotation of the drum (23) before the outer tape (30) reaches the termination end section and can prevent damage caused by excessive tension being applied to each tape.

No. of Pages : 46 No. of Claims : 5

(12) PATENT APPLICATION PUBLICATION
(19) INDIA
(22) Date of filing of Application :12/08/2014
(21) Application No.6761/DELNP/2014 A
(43) Publication Date : 22/05/2015

(54) Title of the invention : WORKING FLUID COMPOSITION FOR REFRIGERATOR REFRIGERATION OIL AND METHOD FOR PRODUCING SAME

(51) International classification :C10M169/04,C10M101/02,C10M105/06
(31) Priority Document No :2012046997
(32) Priority Date :02/03/2012
(33) Name of priority country :Japan
(86) International Application No :PCT/JP2013/055437
Filing Date :28/02/2013
(87) International Publication No :WO 2013/129579
(61) Patent of Addition to Application Number :NA
Filing Date :NA
(62) Divisional to Application Number :NA
Filing Date :NA

(71)**Name of Applicant :**
1)JX NIPPON OIL & ENERGY CORPORATION
Address of Applicant :6 3 Otemachi 2 chome Chiyoda ku Tokyo 1008162 Japan
(72)**Name of Inventor :**
1)SAITO Masanori
2)NARA Fumiyuki
3)MATSUMOTO Tomonari
4)ADEGAWA Kuniko

(57) Abstract :
This working fluid composition for a refrigerator comprises: a refrigeration oil having a kinematic viscosity at 40°C of 2 12 mm/s and a flash point of 120°C or higher and containing an alkylbenzene and a mineral oil in which the %C in n d M ring analysis is 20 60 the pour point is 15°C or lower and the kinematic viscosity at 40°C is 1.5 15 mm/s the mass ratio between said mineral oil/said alkylbenzene being 85/15 to 15/85; and a C hydrocarbon refrigerant.

No. of Pages : 30 No. of Claims : 8

(12) PATENT APPLICATION PUBLICATION
(19) INDIA
(22) Date of filing of Application :12/08/2014
(21) Application No.6762/DELNP/2014 A
(43) Publication Date : 22/05/2015

(54) Title of the invention : AQUEOUS DISPERSIONS OF POLYURETHANE RESINS BASED ON ROSIN

(51) International classification	:C08G18/75,C09D175/06,C08G18/08
(31) Priority Document No	:12.52898
(32) Priority Date	:30/03/2012
(33) Name of priority country	:France
(86) International Application No	:PCT/FR2013/050665
Filing Date	:27/03/2013
(87) International Publication No	:WO 2013/144510
(61) Patent of Addition to Application Number	:NA
Filing Date	:NA
(62) Divisional to Application Number	:NA
Filing Date	:NA

(71)**Name of Applicant :**
1)ARKEMA FRANCE
Address of Applicant :420 rue dEstienne dOrves F 92700 Colombes France
(72)**Name of Inventor :**
1)HERVE Grgoire
2)COGORDAN Frank

(57) Abstract :
The invention concerns a linear or branched polyurethane resin based on a polyester obtained from A) a hydroxylated fatty polyester with: said polyester A) being the reaction product of a) an alcohol component with b) an acid component said acid component b) comprises b1) at least one fatty acid with said component b) also comprising b2) rosin and/or rosin derivatives bearing at least one carboxylic acid function b2) representing between 30 and 85% by weight relative to the total weight of A) optionally said polyester A) having an oil length of zero (0%) or between 0 and 60% optionally said polyester A) having a weight ratio of oxidisable fatty acids (monoacids) relative to the fatty acids of 0 or greater than 0 and up to 1 and with said resin being the reaction of said polyol polyester A) with: B) at least one diol comprising an acid function with said acid function being optionally neutralised C) at least one polyisocyanate with a functionality of between 2 and 3. The polyurethane resin of the invention based on biosourced polyester is used as a binder in coatings and in particular in aqueous dispersions for 20 aqueous coatings with specific performances in terms of speed of drying development of hardness over time in the absence of a drying agent during drying and resistance to yellowing and water.

No. of Pages : 26 No. of Claims : 24

(12) PATENT APPLICATION PUBLICATION
(19) INDIA
(22) Date of filing of Application :12/08/2014
(21) Application No.6763/DELNP/2014 A
(43) Publication Date : 22/05/2015

(54) Title of the invention : LOCKING RING WITH LEVER ARM

(51) International classification :A61F5/448,B65D45/34
(31) Priority Document No :PA 2012 70101
(32) Priority Date :06/03/2012
(33) Name of priority country :Denmark
(86) International Application No :PCT/DK2013/050058
Filing Date :06/03/2013
(87) International Publication No :WO 2013/131523
(61) Patent of Addition to Application Number :NA
Filing Date :NA
(62) Divisional to Application Number :NA
Filing Date :NA

(71)**Name of Applicant :**
1)COLOPLAST A/S
Address of Applicant :Holtedam 1 DK 3050 Humlebaek Denmark
(72)**Name of Inventor :**
1)PEDERSEN Troels

(57) Abstract :
A locking ring (1) for an ostomy coupling as well as an ostomy coupling is provided. The locking ring includes two extension arms (4 5) connected at a common fulcrum (6) that will act as a hinge when the arms are rotated with respect to each other. A toggle mechanism may be used in the locking ring. The extension arms will through a connection to the locking ring close the locking ring upon rotation.

No. of Pages : 17 No. of Claims : 8

(12) PATENT APPLICATION PUBLICATION
(19) INDIA
(22) Date of filing of Application :08/08/2014
(21) Application No.6682/DELNP/2014 A
(43) Publication Date : 22/05/2015

(54) Title of the invention : POWER GEAR SHIFTING TRANSMISSION AND ENGINEERING MACHINERY

(51) International classification :F16H61/30,F16D25/00
(31) Priority Document No :201210025313.3
(32) Priority Date :06/02/2012
(33) Name of priority country :China
(86) International Application No :PCT/CN2012/073915
Filing Date :12/04/2012
(87) International Publication No :WO 2013/117045
(61) Patent of Addition to Application Number :NA
Filing Date :NA
(62) Divisional to Application Number :NA
Filing Date :NA

(71)**Name of Applicant :**
1)HUNAN SANY INTELLIGENT CONTROL EQUIPMENT CO. LTD
Address of Applicant :Sany Industry Town Economic and Technological Development Zone Changsha Hunan 410100 China
2)SANY HEAVY INDUSTRY CO. LTD
(72)**Name of Inventor :**
1)YI Xiaogang
2)LI Songqing
3)CHEN Qiang

(57) Abstract :
A power gear shifting transmission and an engineering machinery. The power gear shifting transmission comprises a clutch shaft assembly (1). The clutch shaft assembly (1) comprises a clutch shaft (11) a housing gear (12) arranged on the clutch shaft (11) a clutch disc (13) arranged within the housing gear (12) and a gear shifting piston (14) arranged at one end of the clutch disc (13). The gear shifting piston (14) is pushed by a clean hydraulic medium introduced via a fluid supply passage (3); the clean hydraulic medium is supplied by a hydraulic system (2). The engineering machinery comprises the power gear shifting transmission. Because the power gear shifting transmission and the engineering machinery employ the hydraulic system (2) to supply the clean hydraulic medium at a stable pressure to the gear shifting piston (14) the shortcomings in the prior art of unclean gear shifting oil unstable pressure bubble content and air absorbing tendency are solved while the advantages of stable gear shifting and extended service life are provided.

No. of Pages : 18 No. of Claims : 15

(12) PATENT APPLICATION PUBLICATION
(19) INDIA
(22) Date of filing of Application :12/08/2014
(21) Application No.6786/DELNP/2014 A
(43) Publication Date : 22/05/2015

(54) Title of the invention : POWER SUPPLY DEVICE FOR POWER CONVERSION DEVICE

(51) International classification :H02M7/48
(31) Priority Document No :NA
(32) Priority Date :NA
(33) Name of priority country :NA
(86) International Application No :PCT/JP2012/053552
Filing Date :15/02/2012
(87) International Publication No :WO 2013/121540
(61) Patent of Addition to Application Number :NA
Filing Date :NA
(62) Divisional to Application Number :NA
Filing Date :NA

(71)**Name of Applicant :**
1)TOSHIBA MITSUBISHI ELECTRIC INDUSTRIAL SYSTEMS CORPORATION
Address of Applicant :3 1 1 Kyobashi Chuo ku Tokyo 1040031 Japan
(72)**Name of Inventor :**
1)IKAWA Eiichi

(57) Abstract :
A control power source PV array (2) for generating power for supplying control power sources of a plurality of power conditioners (12) for converting power generated by a plurality of PV arrays (3) into alternating current power for supply to a grid (9).

No. of Pages : 17 No. of Claims : 12

(12) PATENT APPLICATION PUBLICATION
(19) INDIA
(22) Date of filing of Application :12/08/2014
(21) Application No.6787/DELNP/2014 A
(43) Publication Date : 22/05/2015

(54) Title of the invention : DRUG RECONSTITUTION SYSTEM

(51) International classification :A61M5/19,A61M5/24,A61M5/315
(31) Priority Document No :61/608451
(32) Priority Date :08/03/2012
(33) Name of priority country :U.S.A.
(86) International Application No :PCT/US2013/029807
Filing Date :08/03/2013
(87) International Publication No :WO 2013/134614
(61) Patent of Addition to Application Number :NA
Filing Date :NA
(62) Divisional to Application Number :NA
Filing Date :NA

(71)**Name of Applicant :**
1)BECTON DICKINSON AND COMPANY
Address of Applicant :1 Becton Drive Franklin Lakes New Jersey 07417 U.S.A.
(72)**Name of Inventor :**
1)CRONENBERG Richard
2)WU Haiming

(57) Abstract :
A system including an adapter (14) for sequential engagement with a cartridge (18) containing a first substance and a vial (16) containing a second substance is disclosed. The adapter is configured to first engage with the vial and subsequently engage with the cartridge such that the cartridge is in fluid communication with the vial via the adapter. The system includes a latch member (150) engageable with a portion of the cartridge. A plunger rod (44) includes a protrusion (50) and is adapted to communicate with the latch member the plunger rod being transitionable from a disengaged position in which the protrusion of the plunger rod is disengaged from the latch member and the latch member is locked to the cartridge to an engaged position in which the protrusion is engaged with the latch member and the latch member is unlocked from the cartridge and locked to the plunger rod.

No. of Pages : 48 No. of Claims : 24

(12) PATENT APPLICATION PUBLICATION
(19) INDIA
(22) Date of filing of Application :12/08/2014
(21) Application No.6788/DELNP/2014 A
(43) Publication Date : 22/05/2015

(54) Title of the invention : TRANSFER SET WITH FLOATING NEEDLE FOR DRUG RECONSTITUTION

(51) International classification :A61J1/20,A61J1/06,A61J1/14
(31) Priority Document No :61/606748
(32) Priority Date :05/03/2012
(33) Name of priority country :U.S.A.
(86) International Application No :PCT/US2013/029088
Filing Date :05/03/2013
(87) International Publication No :WO 2013/134246
(61) Patent of Addition to Application Number :NA
Filing Date :NA
(62) Divisional to Application Number :NA
Filing Date :NA

(71)**Name of Applicant :**
1)BECTON DICKINSON AND COMPANY
Address of Applicant :1 Becton Drive Franklin Lakes New Jersey 07417 U.S.A.
(72)**Name of Inventor :**
1)WU Haiming
2)CRONENBERG Richard

(57) Abstract :
An adapter assembly for establishing bidirectional fluid connection between a cartridge and a vial includes a housing having an open first end adapted to engage the cartridge and a second open end adapted to engage the vial. The adapter includes a needle assembly having a first tip and a second tip with the needle assembly disposed within the housing and at least partially supported by a needle holder. The needle assembly is movable relative to the housing from an initial position in which the first and second tip are isolated from the cartridge and vial to an end of use position in which first tip is engaged with the vial and the second tip is engaged with the cartridge establishing fluid communication therebetween. The needle assembly is maintained in the initial position by a locking structure which is released by rotationally advancing the needle holder relative to the housing.

No. of Pages : 39 No. of Claims : 20

(12) PATENT APPLICATION PUBLICATION
(19) INDIA
(22) Date of filing of Application :08/08/2014
(21) Application No.6693/DELNP/2014 A
(43) Publication Date : 22/05/2015

(54) Title of the invention : APPARATUS FOR THE GENERATION OF CLEANING AND/OR SANITIZING SOLUTIONS

(51) International classification :A61L2/03,A61L2/18,A61L2/20
(31) Priority Document No :13/399207
(32) Priority Date :17/02/2012
(33) Name of priority country :U.S.A.
(86) International Application No :PCT/US2013/025813
Filing Date :13/02/2013
(87) International Publication No :WO 2013/122975
(61) Patent of Addition to Application Number :NA
Filing Date :NA
(62) Divisional to Application Number :NA
Filing Date :NA

(71)**Name of Applicant :**
1)DIVERSEY INC.
Address of Applicant :8310 16th Street Sturtevant Wisconsin 53177 U.S.A.
(72)**Name of Inventor :**
1)SPERRY Charles R.
2)PIUCCI Vincent A.
3)McNAMARA Dennis F.
4)SCOTT Suzanne M.
5)KOKE John

(57) Abstract :
The presently disclosed subject matter is directed to an apparatus for the preparation of a cleaning sanitizing or sterilizing solution. In some embodiments the apparatus comprises a modular component such as a cartridge. The cartridge may contain chemical precursors to allow the generation of chlorine dioxide. The apparatus has a fluid inlet and separates the fluid into a first flow path which fills a reservoir. It also has a second flow path which is heated before passing through the cartridge to create the desired gas. The fluid output from the cartridge is then fed into the reservoir.

No. of Pages : 53 No. of Claims : 26

(12) PATENT APPLICATION PUBLICATION
(21) Application No.6694/DELNP/2014 A
(19) INDIA
(22) Date of filing of Application :08/08/2014
(43) Publication Date : 22/05/2015

(54) Title of the invention : PHARMACEUTICAL COMPOSITION FOR THE PREVENTION OR TREATMENT OF NON ALCOHOLIC FATTY LIVER DISEASE

(51) International classification	:A61K38/17,A61K38/16,A61P1/16
(31) Priority Document No	:1020120024632
(32) Priority Date	:09/03/2012
(33) Name of priority country	:Republic of Korea
(86) International Application No	:PCT/KR2013/001897
Filing Date	:08/03/2013
(87) International Publication No	:WO 2013/133667
(61) Patent of Addition to Application Number	:NA
Filing Date	:NA
(62) Divisional to Application Number	:NA
Filing Date	:NA

(71)**Name of Applicant :**
1)HANMI SCIENCE CO. LTD.
Address of Applicant :550 Dongtangiheung ro Dongtan myeon Hwaseong si Gyeonggi do 445 813 Republic of Korea
(72)**Name of Inventor :**
1)LIM Se Young
2)PARK Sung Hee
3)SHIN Ryoung Ae
4)CHOI In Young
5)KWON Se Chang

(57) Abstract :
The present invention relates to a pharmaceutical composition for the prevention and treatment of non alcoholic fatty liver disease (NAFLD) including a conjugate prepared by covalently linking an insulinotropic peptide a non peptidyl polymer and an immunoglobulin Fc region. The composition of the present invention maintains the in vivo activity of the peptide at a relatively high level and remarkably increases the blood half life thereby preventing triglyceride accumulation which is a typical feature of non alcoholic fatty liver disease. Ultimately it can be desirably employed for the prevention and treatment of non alcoholic fatty liver disease.

No. of Pages : 24 No. of Claims : 18

(12) PATENT APPLICATION PUBLICATION
(19) INDIA
(22) Date of filing of Application :13/08/2014
(21) Application No.6791/DELNP/2014 A
(43) Publication Date : 22/05/2015

(54) Title of the invention : SMOKING ARTICLE INCLUDING DUAL HEAT CONDUCTING ELEMENTS

(51) International classification :A24F47/00
(31) Priority Document No :12155234.3
(32) Priority Date :13/02/2012
(33) Name of priority country :EPO
(86) International Application No :PCT/EP2013/052786
Filing Date :12/02/2013
(87) International Publication No :WO 2013/120849
(61) Patent of Addition to Application Number :NA
Filing Date :NA
(62) Divisional to Application Number :NA
Filing Date :NA

(71)**Name of Applicant :**
1)PHILIP MORRIS PRODUCTS S.A.
Address of Applicant :Quai Jeanrenaud 3 CH 2000 Neuchtel Switzerland
(72)**Name of Inventor :**
1)ROUDIER Stephane
2)SAMULEWICZ Aleksandra
3)LAVANCHY Frederic

(57) Abstract :
A smoking article (2) comprises a heat source (4); an aerosol forming substrate (6) downstream of the heat source (4); a first heat conducting element (22) around and in contact with a rear portion (4b) of the heat source and an adjacent front portion (6a) of the aerosol forming substrate; and a second heat conducting element (30) around at least a portion of the first heat conducting element (22). At least part of the second heat conducting element (30) is radially separated from the first heat conducting element (22). Preferably the first (22) and second (30) heat conducting elements are separated by an outer paper wrapper (12).

No. of Pages : 29 No. of Claims : 15

(12) PATENT APPLICATION PUBLICATION
(19) INDIA
(22) Date of filing of Application :13/08/2014
(21) Application No.6792/DELNP/2014 A
(43) Publication Date : 22/05/2015

(54) Title of the invention : METALLOENZYME INHIBITOR COMPOUNDS

(51) International classification :C07D401/06,A61K31/454,A61P35/00
(31) Priority Document No :61/589076
(32) Priority Date :20/01/2012
(33) Name of priority country :U.S.A.
(86) International Application No :PCT/US2013/022313
Filing Date :18/01/2013
(87) International Publication No :WO 2013/109998
(61) Patent of Addition to Application Number :NA
Filing Date :NA
(62) Divisional to Application Number :NA
Filing Date :NA

(71)**Name of Applicant :**
1)VIAMET PHARMACEUTICALS INC.
Address of Applicant :4505 Emperor Blvd. Suite 300 Durham NC 27703 U.S.A.
(72)**Name of Inventor :**
1)HOEKSTRA William J.
2)SCHOTZINGER Robert J.
3)RAFFERTY Stephen W.

(57) Abstract :
The instant invention describes compounds having metalloenzyme modulating activity and methods of treating diseases disorders or symptoms thereof mediated by such metalloenzymes.

No. of Pages : 87 No. of Claims : 52

(12) PATENT APPLICATION PUBLICATION
(19) INDIA
(22) Date of filing of Application :13/08/2014
(21) Application No.6793/DELNP/2014 A
(43) Publication Date : 22/05/2015

(54) Title of the invention : SOLAR CONTROL GLAZING

(51) International classification :C03C17/34,C03C17/36
(31) Priority Document No :1252523
(32) Priority Date :21/03/2012
(33) Name of priority country :France
(86) International Application No :PCT/FR2013/050490
Filing Date :08/03/2013
(87) International Publication No :WO 2013/140061
(61) Patent of Addition to Application Number :NA
Filing Date :NA
(62) Divisional to Application Number :NA
Filing Date :NA

(71)**Name of Applicant :**
1)SAINT GOBAIN GLASS FRANCE
Address of Applicant :18 avenue dAlsace F 92400 Courbevoie France
(72)**Name of Inventor :**
1)SINGH Laura Jane
2)PALACIOS LALOY Augustin
3)SANDRE CHARDONNAL Etienne

(57) Abstract :
The invention relates to solar control glazing comprising a glass substrate provided on one face thereof with a stack of layers having a solar control function wherein the stack comprises the following series of layers from the surface of the glass substrate: a lower layer for protecting the upper layers against the migration of alkali ions from the glass substrate a layer of a mixed indium and tin oxide (ITO) an upper layer for protecting the ITO layer against the oxygen in the air said glazing being characterised in that said upper and lower layers are formed essentially by a dielectric material chosen from a silicon nitride an aluminium nitride or the mixture thereof and in that intermediate layers made from a metal comprising chromium which can optionally be partially or totally oxidised and/or nitrided are disposed to each side of and in contact with said ITO layer the thickness of said intermediate layers being between 0.5 and 3 nanometres.

No. of Pages : 21 No. of Claims : 10

(12) PATENT APPLICATION PUBLICATION
(19) INDIA
(22) Date of filing of Application :11/08/2014
(21) Application No.6726/DELNP/2014 A
(43) Publication Date : 22/05/2015

(54) Title of the invention : VEHICLE HEIGHT ESTIMATION DEVICE AND VEHICLE HEIGHT ESTIMATION METHOD

(51) International classification :B60G17/018,B60W40/12
(31) Priority Document No :NA
(32) Priority Date :NA
(33) Name of priority country :NA
(86) International Application No :PCT/JP2012/053726
Filing Date :16/02/2012
(87) International Publication No :WO 2013/121569
(61) Patent of Addition to Application Number :NA
Filing Date :NA
(62) Divisional to Application Number :NA
Filing Date :NA

(71)**Name of Applicant :**
1)TOYOTA JIDOSHA KABUSHIKI KAISHA
Address of Applicant :1 Toyota cho Toyota shi Aichi 4718571 Japan
(72)**Name of Inventor :**
1)YOSHIMI Tsuyoshi
2)KOUMURA Shingo

(57) Abstract :
The heights of vehicles can be inexpensively estimated by: detecting wheel speeds representing the speed of each wheel (step ST11); performing a frequency analysis of the detected wheel speeds of pairs of left and right wheels and calculating the respective wheel speed characteristics of the left and right wheels at a gain specific frequency (step ST12); calculating the difference in gain between the left and right wheel speeds on the basis of the calculated wheel speed characteristics of the left and right wheels (step ST13); and estimating the height of a vehicle on the basis of the correlation between the wheel heights with respect to the bodies of the wheels and values based the wheel speeds and a road surface inputs inputted from a road surface to the vehicle wheels (i.e. wheel speed/road surface input gain) and the difference in gain between the left and right wheel speeds (step ST14).

No. of Pages : 57 No. of Claims : 8

(12) PATENT APPLICATION PUBLICATION
(19) INDIA
(22) Date of filing of Application :11/08/2014
(21) Application No.6727/DELNP/2014 A
(43) Publication Date : 22/05/2015

(54) Title of the invention : AN ESSENTIALLY BIOBASED THERMOFORMABLE COMPOSITION AND CONTAINERS FORMED THEREOF

(51) International classification :C08K3/34,C08L67/04,B65D81/38
(31) Priority Document No :EP 12001550.8
(32) Priority Date :07/03/2012
(33) Name of priority country :EPO
(86) International Application No :PCT/EP2013/000665
Filing Date :07/03/2013
(87) International Publication No :WO 2013/131649
(61) Patent of Addition to Application Number :NA
Filing Date :NA
(62) Divisional to Application Number :NA
Filing Date :NA

(71)**Name of Applicant :**
1)HUHTAM„KI OYJ
Address of Applicant :Miestentie 9 FIN 02150 Espoo Finland
2)PURAC BIOCHEM B.V.
(72)**Name of Inventor :**
1)HOEKSTRA Aad
2)SCHENNINK Gerald G. J.
3)DE VOS Sicco

(57) Abstract :
The present invention relates to an essentially biobased and optionally biodegradable thermoformable composition containing a) as thermoformable resin at least one poly L lactide with less than 1 mol% of D lactoyl units (PLLA) or at least one poly L lactide with from 1 mol% to 5 mol% of D lactoyl units (PLA) and b) a nucleating combination consisting of a) 1 to 10 % by weight based on the total amount of the thermoformable resin a) of at least one poly D lactide with less than 1 mol% of L lactoyl units (PDLA) as component a 1) or of 0.5 to 5% by weight based on the total amount of the thermoformable resin a) of PLLA/PDLA or PLA/PDLA stereocomplex crystallites preferably with a molar ratio of 1:1 as component a 2)) 0.1 to 25% by weight based on the total amount of the thermoformable resin a) of an inorganic nucleating agent preferably talc and) 0.1 to 30 % by weight based on the total amount of the thermoformable resin a) of at least an inorganic filler with lamellar structure preferably a lamellar clay mineral and to thermoformed essentially biobased and optionally biodegradable containers formed of the inventive compositions.

No. of Pages : 25 No. of Claims : 14

(12) PATENT APPLICATION PUBLICATION
(19) INDIA
(22) Date of filing of Application :11/08/2014
(21) Application No.6729/DELNP/2014 A
(43) Publication Date : 22/05/2015

(54) Title of the invention : SPOKE FOR A TIRE WITH OPTIMIZED THICKNESS FOR IMPROVED DURABILITY

(51) International classification :B60B9/26
(31) Priority Document No :61/620687
(32) Priority Date :05/04/2012
(33) Name of priority country :U.S.A.
(86) International Application No :PCT/US2013/035064
Filing Date :03/04/2013
(87) International Publication No :WO 2013/152067
(61) Patent of Addition to Application Number :NA
Filing Date :NA
(62) Divisional to Application Number :NA
Filing Date :NA

(71)**Name of Applicant :**
1)COMPAGNIE GENERALE DES ESTABLISSEMENTS MICHELIN
Address of Applicant :12 Cours Sablon F 63000 Clermont ferrand France
(72)**Name of Inventor :**
1)CRON Steven M.
2)RHYNE Timothy Brett

(57) Abstract :
The present invention provides spoke geometry for a non pneumatic tire that is less prone to fatigue when used. In particular the spoke geometry is provided with an optimized thickness profile over the length of the spoke. This optimization results in a reduction in the peak strain energy density levels in the spoke thereby reducing the likelihood of crack initiation and propagation which in turn enhances the durability of the spoke and tire.

No. of Pages : 22 No. of Claims : 16

(12) PATENT APPLICATION PUBLICATION
(19) INDIA
(22) Date of filing of Application :13/08/2014
(21) Application No.6821/DELNP/2014 A
(43) Publication Date : 22/05/2015

(54) Title of the invention : VEHICLE WHEEL DISC AND MANUFACTURING METHOD THEREFOR

(51) International classification :B60B3/04,B21D53/26
(31) Priority Document No :2012053940
(32) Priority Date :12/03/2012
(33) Name of priority country :Japan
(86) International Application No :PCT/JP2013/056588
Filing Date :11/03/2013
(87) International Publication No :WO 2013/137168
(61) Patent of Addition to Application Number :NA
Filing Date :NA
(62) Divisional to Application Number :NA
Filing Date :NA

(71)**Name of Applicant :**
1)TOPY KOGYO KABUSHIKI KAISHA
Address of Applicant :2 2 Osaki 1 chome Shinagawa ku Tokyo 1418634 Japan
(72)**Name of Inventor :**
1)ABE Kishiro
2)NISHIBAYASHI Ryo
3)TAKANO Takamitsu
4)SANO Kazunari
5)ISOMURA Yuta

(57) Abstract :
Provided is a vehicle wheel disc (10) and a manufacturing method therefor that is manufactured from a tabular disc material (2) and that has a hub attachment part (12) a disc flange part (13) and a hat part (14). The hat part (14) has the following: a hat top part (15) that projects outward in the disc axial direction; a hat inner peripheral part (16) that connects the hat top part (15) and the hub attachment part (12); and a hat outer peripheral part (17) that connects the hat top part (15) and the disc flange part (13). A first plate thickness reduced part (18a) that is thinner than the disc material (2) is provided at the hat outer peripheral part (17).

No. of Pages : 60 No. of Claims : 12

(12) PATENT APPLICATION PUBLICATION
(19) INDIA
(22) Date of filing of Application :11/08/2014
(21) Application No.6707/DELNP/2014 A
(43) Publication Date : 22/05/2015

(54) Title of the invention : GEAR REDUCER COMPRISING A WORM AND A CROWN WHEEL ASSEMBLY PROVIDED WITH A TORQUE LIMITER

(51) International classification :F16H1/16,F16H35/10,F16D7/02
(31) Priority Document No :BO2012A000090
(32) Priority Date :27/02/2012
(33) Name of priority country :Italy
(86) International Application No :PCT/IB2013/051570
Filing Date :27/02/2013
(87) International Publication No:WO 2013/128386
(61) Patent of Addition to Application Number :NA
Filing Date :NA
(62) Divisional to Application Number :NA
Filing Date :NA

(71)**Name of Applicant :**
1)BONFIGLIOLI RIDUTTORI S.P.A.
Address of Applicant :Via Giovanni XXIII 7/A Frazione Lippo Calderara di Reno Italy
(72)**Name of Inventor :**
1)CASAMENTI Gustavo
2)LEGNARO Andrea
3)ZUCCHINI Matteo

(57) Abstract :
A gear reducer (1) comprising a worm (4) and a crown wheel assembly (6) in turn comprising a crown wheel (8) which is connected/disconnected to/from a drive shaft (10) by means of a torque limiter (11) mounted on this latter. The gear reducer (1) is characterised in that the drive shaft (10) and the torque limiter (11) are comprised in a cartridge (200) which can be extracted/inserted from/in a cavity (100) obtained in the crown wheel assembly (6) according to an axial direction (3) and in accordance with two opposite senses ((Fl) (F2)) without the need to disassemble the worm (4).

No. of Pages : 14 No. of Claims : 10

(12) PATENT APPLICATION PUBLICATION
(19) INDIA
(22) Date of filing of Application :11/08/2014
(21) Application No.6708/DELNP/2014 A
(43) Publication Date : 22/05/2015

(54) Title of the invention : IONIC LIQUIDS FOR COOLING IN HIGH TEMPERATURE ENVIRONMENT

(51) International classification :C09K5/10
(31) Priority Document No :12153670.0
(32) Priority Date :02/02/2012
(33) Name of priority country :EPO
(86) International Application No :PCT/EP2012/077010
Filing Date :28/12/2012
(87) International Publication No :WO 2013/113461
(61) Patent of Addition to Application Number :NA
Filing Date :NA
(62) Divisional to Application Number :NA
Filing Date :NA

(71)**Name of Applicant :**
1)VTU HOLDING GMBH
Address of Applicant :Parkring 18 A 8074 Grambach Austria
(72)**Name of Inventor :**
1)KALB Roland

(57) Abstract :
Cooling medium comprising an ionic liquid with a hydrogen content of 0% to 8.5% by weight and its use.

No. of Pages : 18 No. of Claims : 15

(12) PATENT APPLICATION PUBLICATION
(19) INDIA
(22) Date of filing of Application :13/08/2014
(21) Application No.6807/DELNP/2014 A
(43) Publication Date : 22/05/2015

(54) Title of the invention : VARIANT SUCROSE TRANSPORTER POLYPEPTIDES

(51) International classification :C07K14/195
(31) Priority Document No :13/412124
(32) Priority Date :05/03/2012
(33) Name of priority country :U.S.A.
(86) International Application No :PCT/US2013/028958
Filing Date :05/03/2013
(87) International Publication No :WO 2013/134167
(61) Patent of Addition to Application Number :NA
Filing Date :NA
(62) Divisional to Application Number :NA
Filing Date :NA

(71)**Name of Applicant :**
1)E. I. DU PONT DE NEMOURS AND COMPANY
Address of Applicant :1007 Market Street Wilmington Delaware 19898 U.S.A.
(72)**Name of Inventor :**
1)POLLAK Dana M. Walters
2)VAN DYK Tina K.

(57) Abstract :
Variant sucrose transporter polypeptides that enable bacterial growth over a wide range of gene expression levels and sucrose concentrations are described. Additionally recombinant bacteria comprising these variant sucrose transporter polypeptides and methods of utilizing the bacteria to produce products such as glycerol and glycerol derived products are provided.

No. of Pages : 276 No. of Claims : 12

(12) PATENT APPLICATION PUBLICATION
(19) INDIA
(22) Date of filing of Application :13/08/2014
(21) Application No.6808/DELNP/2014 A
(43) Publication Date : 22/05/2015

(54) Title of the invention : HYDROCORTISONE CONTROLLED RELEASE FORMULATION

(51) International classification :A61K9/50,A61K31/573
(31) Priority Document No :1202433.7
(32) Priority Date :13/02/2012
(33) Name of priority country :U.K.
(86) International Application No :PCT/GB2013/050311
Filing Date :12/02/2013
(87) International Publication No :WO 2013/121184
(61) Patent of Addition to Application Number :NA
Filing Date :NA
(62) Divisional to Application Number :NA
Filing Date :NA

(71)**Name of Applicant :**
1)DIURNAL LIMITED
Address of Applicant :Suite 18 Cardiff MediCentre Heath Park Cardiff CF14 4UJ U.K.
(72)**Name of Inventor :**
1)HUATAN Hiep
2)ROSS Richard
3)WHITAKER Martin

(57) Abstract :
The disclosure relates to a pharmaceutical formulation comprising hydrocortisone and its use in the treatment of conditions that would benefit from a delayed release of hydrocortisone in particular conditions such as adrenal insufficiency inflammatory conditions and depression.

No. of Pages : 41 No. of Claims : 64

(12) PATENT APPLICATION PUBLICATION
(21) Application No.6809/DELNP/2014 A
(19) INDIA
(22) Date of filing of Application :13/08/2014
(43) Publication Date : 22/05/2015

(54) Title of the invention : METHODS AND COMPOSITIONS COMPRISING CEMENT KILN DUST HAVING AN ALTERED PARTICLE SIZE

(51) International classification :C04B28/02,C04B20/02,C09K8/467
(31) Priority Document No :13/399913
(32) Priority Date :17/02/2012
(33) Name of priority country :U.S.A.
(86) International Application No :PCT/US2013/026162
Filing Date :14/02/2013
(87) International Publication No :WO 2013/123207
(61) Patent of Addition to Application Number :NA
Filing Date :NA
(62) Divisional to Application Number :NA
Filing Date :NA

(71)**Name of Applicant :**
1)HALLIBURTON ENERGY SERVICES INC.
Address of Applicant :10200 Bellaire Blvd. Houston Texas 77072 U.S.A.
(72)**Name of Inventor :**
1)RODDY Craig W.
2)CHATTERJI Jiten
3)BRENNEIS Darrell Chad
4)JARRATT Callie R.

(57) Abstract :
Methods and compositions are disclosed that comprise cement kiln dust having a mean particle size that has been altered. An embodiment discloses a subterranean treatment method comprising: introducing a treatment fluid into a subterranean formation wherein the treatment fluid comprises cement kiln dust having a mean particle size that has been altered from its original size by grinding separating or a combination thereof. Another embodiment discloses a subterranean treatment method comprising: introducing a treatment fluid into a subterranean formation wherein the treatment fluid comprises cement kiln dust having a mean particle size that has been reduced from its original size.

No. of Pages : 23 No. of Claims : 44

(12) PATENT APPLICATION PUBLICATION
(21) Application No.6810/DELNP/2014 A
(19) INDIA
(22) Date of filing of Application :13/08/2014
(43) Publication Date : 22/05/2015

(54) Title of the invention : RUBBER POLYMER LATEX HAVING MULTI LAYERED CORE SHELL STRUCTURE MANUFACTURING METHOD THEREFOR AND ACRYLONITRILE BUTADIENE STYRENE GRAFT COPOLYMER INCLUDING SAME

(51) International classification :C08F279/04,C08F2/22,C08L55/02
(31) Priority Document No :1020130070036
(32) Priority Date :19/06/2013
(33) Name of priority country :Republic of Korea
(86) International Application No :PCT/KR2013/012231
Filing Date :26/12/2013
(87) International Publication No :WO 2014/204071
(61) Patent of Addition to Application Number :NA
Filing Date :NA
(62) Divisional to Application Number :NA
Filing Date :NA

(71)**Name of Applicant :**
1)LG CHEM LTD.
Address of Applicant :128 Yeoui daero Yeongdeungpo gu Seoul 150 721 Republic of Korea
(72)**Name of Inventor :**
1)JUNG Yu Sung
2)CHAI Joo Byung
3)PARK Eun Seon
4)JEON Tae Young
5)YOO Keun Hoon
6)AHN Bong Keun

(57) Abstract :
The present invention relates to a rubber polymer latex having a multi layered core shell structure a manufacturing method therefor an acrylonitrile butadiene styrene graft copolymer including the same and a thermoplastic resin composition using the same. The rubber polymer latex having a multi layered core shell structure according to the present invention improves impact resistance coloring properties and weather resistance of an acrylonitrile butadiene styrene graft copolymer including the same by maintaining physical properties of a diene based rubber and improving low weather resistance of the diene based rubber. Therefore the present invention can improve impact strength coloring properties and weather resistance of a thermoplastic resin including the acrylonitrile butadiene styrene graft copolymer and thus can be readily applied to an industry needing the same.

No. of Pages : 25 No. of Claims : 18

(12) PATENT APPLICATION PUBLICATION
(19) INDIA
(22) Date of filing of Application :08/08/2014
(21) Application No.6700/DELNP/2014 A
(43) Publication Date : 22/05/2015

(54) Title of the invention : POLYOLEFIN FIBER

(51) International classification :C08L23/06,C08K3/34
(31) Priority Document No :12160261.9
(32) Priority Date :20/03/2012
(33) Name of priority country :EPO
(86) International Application No :PCT/EP2013/055678
Filing Date :19/03/2013
(87) International Publication No :WO 2013/139784
(61) Patent of Addition to Application Number :NA
Filing Date :NA
(62) Divisional to Application Number :NA
Filing Date :NA

(71)**Name of Applicant :**
1)DSM IP ASSETS B.V.
Address of Applicant :Het Overloon 1 NL 6411 TE Heerlen Netherlands
(72)**Name of Inventor :**
1)VLASBLOM Martin Pieter
2)GIJSMAN Pieter
3)DE DANSCHUTTER Evert Florentinus Florimondus
4)MARISSEN Roelof

(57) Abstract :
The invention relates to a gel spun fiber comprising a polyolefin polymer forming a fiber body wherein a stabilizer is present inside the fiber body characterized in that the amount of said stabilizer is between 0.001 and 10 parts by weight based on 100 parts by weight of the amount of the polyolefin polymer forming said fiber body and wherein said stabilizer is carbon black.

No. of Pages : 14 No. of Claims : 15

(12) PATENT APPLICATION PUBLICATION
(19) INDIA
(22) Date of filing of Application :13/08/2014
(21) Application No.6801/DELNP/2014 A
(43) Publication Date : 22/05/2015

(54) Title of the invention : ACCOMMODATING INTRA OCULAR LENS SYSTEM

(51) International classification :A61F2/16,A61F2/14
(31) Priority Document No :13/351459
(32) Priority Date :17/01/2012
(33) Name of priority country :U.S.A.
(86) International Application No :PCT/US2013/021663
Filing Date :16/01/2013
(87) International Publication No :WO 2013/109579
(61) Patent of Addition to Application Number :NA
Filing Date :NA
(62) Divisional to Application Number :NA
Filing Date :NA

(71)**Name of Applicant :**
1)VISTA OCULAR LLC
Address of Applicant :5890 Mayfair Road North Canton OH 44720 U.S.A.
(72)**Name of Inventor :**
1)ROHOLT Philip C.

(57) Abstract :
An implantable compressible accommodating intra ocular lens (IOL) coupled to at least one sensor which detects a signal created by the ciliary muscle. A ciliary sulcus ring can house the at least one sensor and the sensor can include miniaturized electrodes (ciliary muscle probes) for implanting into the ciliary muscle of the subject. A potentiometer/microcomputer can modulate the ciliary muscle signal detected by the sensor(s) into an electrical signal and a transmitter sends this electrical signal to a micromotor which causes compression of the IOL via an annular support ring system causing a change in the IOL shape. The IOL can be part of an IOL complex including a compressible accommodating IOL an external lens membrane and an annular support ring system. The annular support ring system provides a foundation for the micromotor to compress the IOL.

No. of Pages : 23 No. of Claims : 20

(12) PATENT APPLICATION PUBLICATION
(19) INDIA
(22) Date of filing of Application :13/08/2014
(21) Application No.6803/DELNP/2014 A
(43) Publication Date : 22/05/2015

(54) Title of the invention : BAG LOCKING MECHANISM

(51) International classification :C12M1/00,B01F15/00,C12M3/00
(31) Priority Document No :12502514
(32) Priority Date :16/03/2012
(33) Name of priority country :Sweden
(86) International Application No :PCT/SE2013/050256
Filing Date :15/03/2013
(87) International Publication No :WO 2013/137813
(61) Patent of Addition to Application Number :NA
Filing Date :NA
(62) Divisional to Application Number :NA
Filing Date :NA

(71)**Name of Applicant :**
1)GE HEALTHCARE BIO SCIENCES AB
Address of Applicant :Patent Department Bjrkgatan 30 S 751 84 Uppsala Sweden
(72)**Name of Inventor :**
1)…KERSTR–M Patrik

(57) Abstract :
The invention relates to a bag locking mechanism comprising a fixed locking means (106) provided with a first abutment surface (116) a movable locking means (108; 208) which is movable between a locking position and a releasing position and a second abutment surface (118; 218) arranged on the movable locking means (108; 208). The fixed locking means (106) defines by its configuration at least partly a restricted locking space (114) in which the movable locking means (108; 208) is movable between the locking and releasing position.

No. of Pages : 19 No. of Claims : 18

(12) PATENT APPLICATION PUBLICATION
(19) INDIA
(22) Date of filing of Application :13/08/2014
(21) Application No.6804/DELNP/2014 A
(43) Publication Date : 22/05/2015

(54) Title of the invention : MIXING SYSTEM

(51) International classification :B01F15/00,C12M1/02,C12M1/06
(31) Priority Document No :12502480
(32) Priority Date :16/03/2012
(33) Name of priority country :Sweden
(86) International Application No :PCT/SE2013/050238
Filing Date :14/03/2013
(87) International Publication No :WO 2013/137812
(61) Patent of Addition to Application Number :NA
Filing Date :NA
(62) Divisional to Application Number :NA
Filing Date :NA

(71)**Name of Applicant :**
1)GE HEALTHCARE BIO SCIENCES AB
Address of Applicant :Patent Department Bjrkgatan 30 S 751 84 Uppsala Sweden
(72)**Name of Inventor :**
1)GEBAUER Klaus
2)JONSSON Patrick
3)R–NNHOLM David

(57) Abstract :
The present invention relates to a mixing system comprising a vessel (1) for housing a disposable fluid mixing bag(2) which vessel (1) comprises a base (3) supporting the fluid mixing bag(2)and a sidewall(4)extending vertically upwards from the base (3). The sidewall(4)of the vesselcomprises a door opening(5)which is closable by a sliding door(6).The system with the sliding door provides an easy access to the inside of the vessel (1) in a space saving manner.

No. of Pages : 18 No. of Claims : 20

(12) PATENT APPLICATION PUBLICATION
(19) INDIA
(22) Date of filing of Application :13/08/2014
(21) Application No.6806/DELNP/2014 A
(43) Publication Date : 22/05/2015

(54) Title of the invention : CHEMOENZYMATIC GLYCOENGINEERING OF ANTIBODIES AND FC FRAGMENTS THEREOF

(51) International classification :C12P21/08,C07K16/18,A61K39/395
(31) Priority Document No :61/597468
(32) Priority Date :10/02/2012
(33) Name of priority country :U.S.A.
(86) International Application No :PCT/US2013/025553
Filing Date :11/02/2013
(87) International Publication No :WO 2013/120066
(61) Patent of Addition to Application Number :NA
Filing Date :NA
(62) Divisional to Application Number :NA
Filing Date :NA

(71)**Name of Applicant :**
1)UNIVERSITY OF MARYLAND BALTIMORE
Address of Applicant :620 West Lexington Street 4th Floor Baltimore MD 21201 U.S.A.
(72)**Name of Inventor :**
1)WANG Lai Xi
2)HUANG Wei

(57) Abstract :
The present invention provides for recombinant Endo S mutants that exhibit reduced hydrolysis activity and increased transglycosylation activity for the synthesis of glycoproteins wherein a desired sialylated oxazoline or synthetic oligosaccharide oxazoline is added to a core fucosylated or nonfucosylated GlcNAc protein acceptor. Such recombinant Endo S mutants are useful for efficient glycosylation remodeling of IgGl Fc domain to provide different antibody glycoforms carrying structurally well defined Fc N glycans.

No. of Pages : 92 No. of Claims : 22

(12) PATENT APPLICATION PUBLICATION
(19) INDIA
(22) Date of filing of Application :11/08/2014
(21) Application No.6716/DELNP/2014 A
(43) Publication Date : 22/05/2015

(54) Title of the invention : AZEOTROPIC COMPOSITIONS OF 1 1 1 3 3 PENTACHLOROPROPANE AND HYDROGEN FLUORIDE

(51) International classification :C07C19/01,C01B7/19,C09K3/00
(31) Priority Document No :13/402983
(32) Priority Date :23/02/2012
(33) Name of priority country :U.S.A.
(86) International Application No :PCT/US2013/025892
Filing Date :13/02/2013
(87) International Publication No :WO 2013/126255
(61) Patent of Addition to Application Number :NA
Filing Date :NA
(62) Divisional to Application Number :NA
Filing Date :NA

(71)**Name of Applicant :**
1)HONEYWELL INTERNATIONAL INC.
Address of Applicant :Patent Services M/S AB/2B 101 Columbia Road P. O. Box 2245 Morristown NJ 07962 2245 U.S.A.
(72)**Name of Inventor :**
1)MERKEL Daniel C.
2)TUNG Hsueh Sung
3)POKROVSKI Konstantin A.
4)PHAM Hang T.
5)HULSE Ryan

(57) Abstract :
Provided are azeotropic or azeotrope like mixtures of 1 1 1 3 3 pentachloro propane (240fa) and hydrogen fluoride. Such compositions are useful as an intermediate in the production of HFC 245fa and HCFO 1233zd.

No. of Pages : 16 No. of Claims : 10

(12) PATENT APPLICATION PUBLICATION
(19) INDIA
(22) Date of filing of Application :11/08/2014
(21) Application No.6717/DELNP/2014 A
(43) Publication Date : 22/05/2015

(54) Title of the invention : AZEOTROPIC COMPOSITIONS OF 1 1 3 3 TETRACHLORO 1 FLUOROPROPANE AND HYDROGEN FLUORIDE

(51) International classification :C09K3/00,C09K5/04,C07C19/10
(31) Priority Document No :13/403011
(32) Priority Date :23/02/2012
(33) Name of priority country :U.S.A.
(86) International Application No :PCT/US2013/025854
Filing Date :13/02/2013
(87) International Publication No :WO 2013/126253
(61) Patent of Addition to Application Number :NA
Filing Date :NA
(62) Divisional to Application Number :NA
Filing Date :NA

(71)**Name of Applicant :**
1)HONEYWELL INTERNATIONAL INC.
Address of Applicant :Patent Services M/S AB/2B 101 Columbia Road P. O. Box 2245 Morristown NJ 07962 2245 U.S.A.
(72)**Name of Inventor :**
1)MERKEL Daniel C.
2)POKROVSKI Konstantin A.
3)PHAM Hang T.
4)TUNG Hsueh Sung
5)HULSE Ryan

(57) Abstract :
Provided are azeotropic or azeotrope like mixtures of 1 1 3 3 tetrachloro 1 fluoropropane (HCFC 241fa) and hydrogen fluoride. Such compositions are useful as an intermediate in the production of HFC 245fa and HCFO 1233zd.

No. of Pages : 15 No. of Claims : 10

(12) PATENT APPLICATION PUBLICATION
(19) INDIA
(22) Date of filing of Application :11/08/2014
(21) Application No.6718/DELNP/2014 A
(43) Publication Date : 22/05/2015

(54) Title of the invention : PROCESS FOR PRODUCING 2 3 3 3 TETRAFLUOROPROPENE

(51) International classification :C07C17/20,C07C21/18
(31) Priority Document No :61/604629
(32) Priority Date :29/02/2012
(33) Name of priority country :U.S.A.
(86) International Application No :PCT/US2013/027606
Filing Date :25/02/2013
(87) International Publication No :WO 2013/130385
(61) Patent of Addition to Application Number :NA
Filing Date :NA
(62) Divisional to Application Number :NA
Filing Date :NA

(71)**Name of Applicant :**
1)HONEYWELL INTERNATIONAL INC.
Address of Applicant :101 Columbia Road Morristown New Jersey 07962 U.S.A.
(72)**Name of Inventor :**
1)WANG Haiyou
2)BEKTESEVIC Selma
3)TUNG Hsueh S.
4)KOPKALLI Haluk
5)CHIU Yuon

(57) Abstract :
The present invention relates in part an improved process for the production of certain hydrofluoroolefins particularly 2 3 3 3 tetrafluoropropene (1234yf). In certain non limiting embodiments the invention relates to methods for improving process efficiency during the fluorination of 1 1 2 3 tetrachloropropene 2 3 3 3 tetrachloropropene and/or 1 1 1 2 3 pentachloropropane to 2 chloro 3 3 3 trifluoropropene by separating and recycling unreacted HF unreacted starting materials and/or certain process intermediates from the 2 chloro 3 3 3 trifluoropropene product stream.

No. of Pages : 27 No. of Claims : 25

(12) PATENT APPLICATION PUBLICATION
(19) INDIA
(22) Date of filing of Application :11/08/2014
(21) Application No.6719/DELNP/2014 A
(43) Publication Date : 22/05/2015

(54) Title of the invention : DEHYDRATED PLANT DERIVED PRODUCTS AND METHODS FOR MAKING THE SAME

(51) International classification :A23L1/212,A23L2/02,A23L3/40
(31) Priority Document No :61/585502
(32) Priority Date :11/01/2012
(33) Name of priority country :U.S.A.
(86) International Application No :PCT/US2013/021293
Filing Date :11/01/2013
(87) International Publication No :WO 2013/106754
(61) Patent of Addition to Application Number :NA
Filing Date :NA
(62) Divisional to Application Number :NA
Filing Date :NA

(71)**Name of Applicant :**
1)COLUMBIA PHYTOTECHNOLOGY LLC
Address of Applicant :250 Steelhead Way The Dalles OR 97058 U.S.A.
(72)**Name of Inventor :**
1)SAVARESE Mark
2)RINGER Kerry

(57) Abstract :
Embodiments of a composition comprising (a) a dispersion 40 99.9% (w/w) plant derived product and 0 60% (w/w) exogenous disaccharide and (b) water are disclosed wherein the composition has a water content < 5% (w/w). Suitable plant derived products include solids from fruits vegetables and sap or nectar derived products. Solids from fruits and/or vegetables are obtained from a puree a juice or a combination thereof. The composition may further include natural color and/or natural flavor obtained from a fruit a vegetable or a combination thereof. In some embodiments the composition further includes < 5% flowability agent. In some embodiments the composition is a powder comprising a plurality of particles each particle having a substantially similar chemical composition. Also disclosed are embodiments of products including the disclosed powders and methods for making the compositions.

No. of Pages : 85 No. of Claims : 48

(12) PATENT APPLICATION PUBLICATION
(19) INDIA
(22) Date of filing of Application :13/08/2014
(21) Application No.6820/DELNP/2014 A
(43) Publication Date : 22/05/2015

(54) Title of the invention : CONTROL DEVICE FOR HYBRID VEHICLE

(51) International classification :B60W20/00,B60K6/48,B60K6/547
(31) Priority Document No :NA
(32) Priority Date :NA
(33) Name of priority country :NA
(86) International Application No :PCT/JP2012/054772
Filing Date :27/02/2012
(87) International Publication No :WO 2013/128547
(61) Patent of Addition to Application Number :NA
Filing Date :NA
(62) Divisional to Application Number :NA
Filing Date :NA

(71)**Name of Applicant :**
1)TOYOTA JIDOSHA KABUSHIKI KAISHA
Address of Applicant :1 Toyota cho Toyota shi Aichi 4718571 Japan
(72)**Name of Inventor :**
1)TANAKA Takaaki
2)TAKAHASHI Tomoya

(57) Abstract :
In a hybrid vehicle (1A) a manual transmission (10) that switches gear speeds in accordance with the operation of a shift lever (13) is provided in a power transmission path between an internal combustion engine (2) and drive wheels (5) and a motor generator (MG) (3) is provided capable of driving the drive wheels (5). The hybrid vehicle (1A) is capable of traveling in an EV running mode in which the internal combustion engine (2) is stopped and the drive wheels (5) are driven by the MG (3) and an engine running mode in which the drive wheels (5) are driven by the internal combustion engine (2). The hybrid vehicle (1A) is provided with a control device which switches the running mode to the EV running mode if it is determined that the accelerator operation amount in the engine running mode is less than a reference operation amount. If a shift operation is performed in the transmission (10) while the running mode is the engine running mode switching to the EV running mode is restricted from the start of the shift operation until a switch time limit elapses after shifting is completed.

No. of Pages : 43 No. of Claims : 3

(12) PATENT APPLICATION PUBLICATION
(19) INDIA
(22) Date of filing of Application :11/08/2014
(21) Application No.6742/DELNP/2014 A
(43) Publication Date : 22/05/2015

(54) Title of the invention : FOREIGN LANGUAGE TRANSLATION USING PRODUCT INFORMATION

(51) International classification :G06F17/30
(31) Priority Document No :13/413041
(32) Priority Date :06/03/2012
(33) Name of priority country :U.S.A.
(86) International Application No :PCT/US2013/029152
Filing Date :05/03/2013
(87) International Publication No :WO 2013/134284
(61) Patent of Addition to Application Number :NA
Filing Date :NA
(62) Divisional to Application Number :NA
Filing Date :NA

(71)**Name of Applicant :**
1)AMAZON TECHNOLOGIES INC.
Address of Applicant :410 Terry Avenue North Seattle WA 98109 5210 U.S.A.
(72)**Name of Inventor :**
1)BHAGAT Rahul H.

(57) Abstract :
Product information may be utilized to create a translation dictionary. The translation dictionary may then be utilized to translate search queries from a foreign language to the primary language that is utilized to provide an online e commerce marketplace. The translated search queries may then be utilized to perform a search of a product catalog maintained by the online e commerce marketplace. The translation dictionary created with the product information might also be utilized to translate resources such as Web site resources to verify the translation of the resources and to perform other functionality.

No. of Pages : 48 No. of Claims : 15

(12) PATENT APPLICATION PUBLICATION
(21) Application No.6743/DELNP/2014 A
(19) INDIA
(22) Date of filing of Application :11/08/2014
(43) Publication Date : 22/05/2015

(54) Title of the invention : COMPOSITIONS AND METHODS FOR TARGET DELIVERING A BIOACTIVE AGENT TO AQUATIC ORGANISMS

(51) International classification	:A01N47/18,A01N43/30,A01P1/00
(31) Priority Document No	:61/601290
(32) Priority Date	:21/02/2012
(33) Name of priority country	:U.S.A.
(86) International Application No	:PCT/US2013/027095
Filing Date	:21/02/2013
(87) International Publication No	:WO 2013/126543
(61) Patent of Addition to Application Number	:NA
Filing Date	:NA
(62) Divisional to Application Number	:NA
Filing Date	:NA

(71)**Name of Applicant :**
1)ADVANCED BIONUTRITION CORPORATION
Address of Applicant :7155 Columbia Gateway Drive Suite H Columbia MD 21046 U.S.A.
(72)**Name of Inventor :**
1)HAREL Moti
2)CARPENTER Brian
3)SCHMALZ Pete

(57) Abstract :
Biodegradable and nutritionally attractive composition comprising biocidal or antibiotic compounds and/or microbes having bio adhesion and controlled buoyancy properties are selectively fed to an aquatic organism in open or closed water bodies and bioactive components are released upon contact with mucosal tissues such as gill skin or along the digestive tract of the selected aquatic organism.

No. of Pages : 35 No. of Claims : 30

(12) PATENT APPLICATION PUBLICATION
(21) Application No.6744/DELNP/2014 A
(19) INDIA
(22) Date of filing of Application :12/08/2014
(43) Publication Date : 22/05/2015

(54) Title of the invention : DEVICE CONTROL SYSTEM AND METH OD FOR CONTROLLING DEVICE CONTROL SYSTEM

(51) International classification :G06F13/00
(31) Priority Document No :61/748232
(32) Priority Date :02/01/2013
(33) Name of priority country :U.S.A.
(86) International Application No :PCT/JP2013/007633
Filing Date :26/12/2013
(87) International Publication No :WO 2014/106883
(61) Patent of Addition to Application Number :NA
Filing Date :NA
(62) Divisional to Application Number :NA
Filing Date :NA

(71)**Name of Applicant :**
1)SEIKO EPSON CORPORATION
Address of Applicant :4 1 Nishi shinjuku 2 chome Shinjuku ku Tokyo 1630811 Japan
(72)**Name of Inventor :**
1)TAKASU Kazuhiro
2)TSUTSUMI Koichiro
3)IKEDA Shigeo

(57) Abstract :
The present invention enables a device to be controlled by a terminal connected to a network. A device control system is provided with a terminal (3) equip ped with an application (31) and a printer (5) for controlling a device. The ter minal (3) transmits a request written in an XML format and generated by the application (31). The printer (5) receives the request in XML format transmits a response in XML format to the terminal (3) and controls the device when the terminal (3) requests that the device be controlled by the request in XML format.

No. of Pages : 158 No. of Claims : 20

(12) PATENT APPLICATION PUBLICATION
(21) Application No.6745/DELNP/2014 A
(19) INDIA
(22) Date of filing of Application :12/08/2014
(43) Publication Date : 22/05/2015

(54) Title of the invention : DEVICE CONTROL SYSTEM PRINTER AND METHOD FOR CONTROLLING DEVICE CONTROL SYSTEM

(51) International classification :G06F13/00
(31) Priority Document No :61/748232
(32) Priority Date :02/01/2013
(33) Name of priority country :U.S.A.
(86) International Application No :PCT/JP2013/007625
Filing Date :26/12/2013
(87) International Publication No :WO 2014/106882
(61) Patent of Addition to Application Number :NA
Filing Date :NA
(62) Divisional to Application Number :NA
Filing Date :NA

(71)**Name of Applicant :**
1)SEIKO EPSON CORPORATION
Address of Applicant :4 1 Nishi shinjuku 2 chome Shinjuku ku Tokyo 1630811 Japan
(72)**Name of Inventor :**
1)TAKASU Kazuhiro
2)TSUTSUMI Koichiro
3)IKEDA Shigeo

(57) Abstract :
The present invention enables a device to be controlled by a terminal connected to a network. A device control system is provided with a terminal (3) equipped with a web browser (31) and a printer (5) for controlling a connected device. The terminal (3) calls an object that a device API (33) for controlling the device by a web application (32) has in accordance with the device and transmits a request to the printer (5). The printer (5) executes a device control script (502) for controlling the device and controls the device upon receiving the request transmitted via the device API (33).

No. of Pages : 175 No. of Claims : 21

(12) PATENT APPLICATION PUBLICATION
(21) Application No.6746/DELNP/2014 A
(19) INDIA
(22) Date of filing of Application :12/08/2014
(43) Publication Date : 22/05/2015

(54) Title of the invention : ILLUMINATION DEVICE AND PROJECTOR

(51) International classification :G03B21/00,H04N9/00
(31) Priority Document No :2012031849
(32) Priority Date :16/02/2012
(33) Name of priority country :Japan
(86) International Application No :PCT/JP2013/000721
Filing Date :08/02/2013
(87) International Publication No :WO 2013/121765
(61) Patent of Addition to Application Number :NA
Filing Date :NA
(62) Divisional to Application Number :NA
Filing Date :NA

(71)**Name of Applicant :**
1)SEIKO EPSON CORPORATION
Address of Applicant :4 1 Nishi shinjuku 2 chome Shinjuku ku Tokyo 1630811 Japan
(72)**Name of Inventor :**
1)AKIYAMA Koichi

(57) Abstract :
An illumination device (100) includes a solid state light source device (10) a pickup lens unit (20) on which light from the solid state light source device is incident and a polarization conversion element (40). A lens (22) constituting the light exit surface of the pickup lens unit (20) is an aspherical lens having a light exit surface shaped like a rotationally symmetric shape centered on a light axis (40ax) when viewed from a direction of the light axis (40ax) and having a cross section of an aspherical shape when cut with a plane parallel to the light axis (40ax). The light exit surface of the aspherical lens has a function of collimating and then emitting the light having been emitted from the center of the solid state light source device (10) in an area near to the light axis (40ax) and emitting the light so as to converge toward the light axis in an area far from the light axis (40ax)

No. of Pages : 57 No. of Claims : 7

(12) PATENT APPLICATION PUBLICATION
(19) INDIA
(22) Date of filing of Application :12/08/2014
(21) Application No.6781/DELNP/2014 A
(43) Publication Date : 22/05/2015

(54) Title of the invention : NEW FORMS AND SALTS OF A DIHYDROPYRROLO[1 2 C]IMIDAZOLYL ALDOSTERONE SYNTHASE OR AROMATASE INHIBITOR

(51) International classification :C07D487/04,A61K31/407,A61P5/38
(31) Priority Document No :61/587280
(32) Priority Date :17/01/2012
(33) Name of priority country :U.S.A.
(86) International Application No :PCT/US2013/021521
Filing Date :15/01/2013
(87) International Publication No :WO 2013/109514
(61) Patent of Addition to Application Number :NA
Filing Date :NA
(62) Divisional to Application Number :NA
Filing Date :NA

(71)**Name of Applicant :**
1)NOVARTIS AG
Address of Applicant :Lichtstrasse 35 CH 4056 Basel Switzerland
(72)**Name of Inventor :**
1)SUTTON Paul
2)LOESER Eric

(57) Abstract :
The invention relates to a phosphate salt or a nitrate salt of 4 (R) 6 7 dihydro 5H pyrrolo[l 2 c]imidazol 5 yl 3 fluoro benzonitrile having following formula: especially in crystalline form and specific forms of these salts as well as related invention embodiments. The salts and salt forms allow for the prophylactic and/or therapeutic treatment of aldosterone synthase and/or aromatase mediated diseases or disorders such as Cushing s disease.

No. of Pages : 40 No. of Claims : 15

(12) PATENT APPLICATION PUBLICATION
(21) Application No.6782/DELNP/2014 A
(19) INDIA
(22) Date of filing of Application :12/08/2014
(43) Publication Date : 22/05/2015

(54) Title of the invention : WIND POWER PLANT HAVING A FIRE PROTECTION MODULE FOR A TRANSFORMER IN THE TOWER

(51) International classification :F03D11/00
(31) Priority Document No :10 2012 202 979.6
(32) Priority Date :28/02/2012
(33) Name of priority country :Germany
(86) International Application No :PCT/EP2013/053061
Filing Date :15/02/2013
(87) International Publication No :WO 2013/127643
(61) Patent of Addition to Application Number :NA
Filing Date :NA
(62) Divisional to Application Number :NA
Filing Date :NA

(71)**Name of Applicant :**
1)WOBBEN PROPERTIES GMBH
Address of Applicant :Dreekamp 5 26605 Aurich Germany
(72)**Name of Inventor :**
1)H–LSCHER Norbert
2)BR„SKE Mischa

(57) Abstract :
The invention relates to a wind power plant having a tower (102) that has at least one bottom tower segment (102a) and a pre manufactured fire protection module (300) for fireproof receiving of a transformer (500). The fire protection module (300) is placed within the bottom tower segment (102b).

No. of Pages : 17 No. of Claims : 7

(12) PATENT APPLICATION PUBLICATION
(19) INDIA
(22) Date of filing of Application :12/08/2014
(21) Application No.6783/DELNP/2014 A
(43) Publication Date : 22/05/2015

(54) Title of the invention : HYBRID TOUCH SCREEN DEVICE AND METHOD FOR OPERATING THE SAME

(51) International classification :G06F3/041,G06F3/048,H04B1/40
(31) Priority Document No :1020120019316
(32) Priority Date :24/02/2012
(33) Name of priority country :Republic of Korea
(86) International Application No :PCT/KR2013/001444
Filing Date :22/02/2013
(87) International Publication No :WO 2013/125902
(61) Patent of Addition to Application Number :NA
Filing Date :NA
(62) Divisional to Application Number :NA
Filing Date :NA

(71)**Name of Applicant :**
1)SAMSUNG ELECTRONICS CO. LTD.
Address of Applicant :129 Samsung ro Yeongtong gu Suwon si Gyeonggi do 443 742 Republic of Korea
(72)**Name of Inventor :**
1)CHOI Young Jin
2)SHIN Ho Seung
3)LEE Ju Seung

(57) Abstract :
A hybrid touch screen device applied to an electric device. The hybrid touch screen device preferably includes a touch panel a pen touch panel a display panel and at least one processor. The touch panel detects an input event by a direct touch. The pen touch panel detects a touch pen input and an input event from an entry into a predetermined detection distance before a touch. The display panel displays a screen according to the touch panel the pen touch panel and a user operation. The processor also performs control to execute a relevant function according to an input event inputted to the touch panel and the pen touch panel. The processor also performs control so that an input event of the touch pen and an input event of the touch panel are detected independently of each other.

No. of Pages : 29 No. of Claims : 15

(12) PATENT APPLICATION PUBLICATION
(19) INDIA
(22) Date of filing of Application :12/08/2014
(21) Application No.6784/DELNP/2014 A
(43) Publication Date : 22/05/2015

(54) Title of the invention : METHODS AND DEVICES FOR RAPID DETECTION AND IDENTIFICATION OF LIVE MICROORGANISMS BY APTAMERS AND/OR ANTIBODIES IMMOBILIZED ON PERMEABLE MEMBRANES

(51) International classification :G01N33/53,C12Q1/04,C12Q1/68
(31) Priority Document No :13/350127
(32) Priority Date :13/01/2012
(33) Name of priority country :U.S.A.
(86) International Application No :PCT/US2012/022739
Filing Date :26/01/2012
(87) International Publication No :WO 2013/105981
(61) Patent of Addition to Application Number :NA
Filing Date :NA
(62) Divisional to Application Number :NA
Filing Date :NA

(71)**Name of Applicant :**
1)NANOLOGIX INC.
Address of Applicant :843 N. Main Street Hubbard OH 4442S U.S.A.
(72)**Name of Inventor :**
1)BARNHIZER Bret T.

(57) Abstract :
The invention provides methods devices and kits for rapid detection and identification of one or more live target microorganisms in a liquid sample or grown on plates containing solid nutrient media. The invention includes mixing one or more target microorganisms with one or more aptamers and/or one or more antibodies each conjugated to a reporter compound and specific for a first site on one or more target microorganisms to form a mixture. The mixture is placed on a permeable membrane having immobilized thereon one or more aptamers linked to an amine compound and/or one or more antibodies each specific for a second site on one or more target microorganisms or a site on the aptamer conjugate and/or antibody conjugate. A detection solution is added to the membrane and detection and identification of one or more target microorganisms is achieved in about one hour or less.

No. of Pages : 38 No. of Claims : 34

(12) PATENT APPLICATION PUBLICATION
(19) INDIA
(22) Date of filing of Application :12/08/2014
(21) Application No.6785/DELNP/2014 A
(43) Publication Date : 22/05/2015

(54) Title of the invention : HOLD ANNOUNCEMENT CONFIGURATION

(51) International classification :H04L29/06
(31) Priority Document No :NA
(32) Priority Date :NA
(33) Name of priority country :NA
(86) International Application No :PCT/EP2012/056093
Filing Date :03/04/2012
(87) International Publication No :WO 2013/149654
(61) Patent of Addition to Application Number :NA
Filing Date :NA
(62) Divisional to Application Number :NA
Filing Date :NA

(71)**Name of Applicant :**
1)TELEFONAKTIEBOLAGET L M ERICSSON (PUBL)
Address of Applicant :S 164 83 Stockholm Sweden
(72)**Name of Inventor :**
1)FORSBERG Mikael
2)AXELL Jrgen
3)NORELL Lennart

(57) Abstract :
A method and apparatus for managing a HOLD announcement in a communication network. At an Application Server AS a message is received from a user terminal the message comprises of an indicator specifying whether the AS should provide a HOLD announcement in the event of a change in direction of a media stream between the user terminal and a further node during a session. The AS stores the indicator in a memory. Upon determination that a change in direction of the media stream has occurred the AS determines from the indicator whether or not to provide the HOLD announcement to the further node.

No. of Pages : 24 No. of Claims : 12

(12) PATENT APPLICATION PUBLICATION
(19) INDIA
(22) Date of filing of Application :12/08/2014
(21) Application No.6771/DELNP/2014 A
(43) Publication Date : 22/05/2015

(54) Title of the invention : AZEOTROPE LIKE COMPOSITIONS OF Z 1 1 1 4 4 4 HEXAFLUORO 2 BUTENE AND E 1 1 1 4 4 4 HEXAFLUORO 2 BUTENE AND USES THEREOF

(51) International classification :A62D1/00,C09K5/04,C09K3/30
(31) Priority Document No :61/599993
(32) Priority Date :17/02/2012
(33) Name of priority country :U.S.A.
(86) International Application No :PCT/US2013/026133
Filing Date :14/02/2013
(87) International Publication No :WO 2013/123184
(61) Patent of Addition to Application Number :NA
Filing Date :NA
(62) Divisional to Application Number :NA
Filing Date :NA

(71)**Name of Applicant :**
1)E. I. DU PONT DE NEMOURS AND COMPANY
Address of Applicant :1007 Market Street Wilmington DE 19898 U.S.A.
(72)**Name of Inventor :**
1)ROBIN Mark L.
2)CREAZZO Joseph Anthony
3)LOH Gary

(57) Abstract :
Azeotrope like compositions are disclosed. The azeotrope like compositions are mixtures of Z 1 1 1 4 4 4 hexafluoro 2 butene and E 1 1 1 4 4 4 hexafluoro 2 butene. Also disclosed is a process of preparing a thermoplastic or thermoset foam by using such azeotrope like compositions as blowing agents. Also disclosed is a process of producing refrigeration by using such azeotrope like compositions. Also disclosed is a process of using such azeotrope like compositions as solvents. Also disclosed is a process of producing an aerosol product by using such azeotrope like compositions. Also disclosed is a process of using such azeotrope like compositions as heat transfer media. Also disclosed is a process of extinguishing or suppressing a fire by using such azeotrope like compositions. Also disclosed is a process of using such azeotrope like compositions as dielectrics. Also disclosed is a foam forming composition containing such azeotrope like composition and an active hydrogen containing compound having two or more active hydrogens.

No. of Pages : 22 No. of Claims : 11

(12) PATENT APPLICATION PUBLICATION
(19) INDIA
(22) Date of filing of Application :12/08/2014
(21) Application No.6772/DELNP/2014 A
(43) Publication Date : 22/05/2015

(54) Title of the invention : COMPOSITIONS AND METHODS FOR MONITORING BIOMETRIC INDICATORS

(51) International classification :A61B6/00
(31) Priority Document No :61/600182
(32) Priority Date :17/02/2012
(33) Name of priority country :U.S.A.
(86) International Application No :PCT/US2013/026277
Filing Date :15/02/2013
(87) International Publication No :WO 2013/123285
(61) Patent of Addition to Application Number :NA
Filing Date :NA
(62) Divisional to Application Number :NA
Filing Date :NA

(71)**Name of Applicant :**
1)PHARMACOPHOTONICS INC.
Address of Applicant :351 W. 10th Street Suite 358 Indianapolis IN 46202 U.S.A.
(72)**Name of Inventor :**
1)MEIER Daniel
2)MOLITORIS Bruce
3)SHERIDAN Erinn
4)SANDOVAL Ruben

(57) Abstract :
Methods of measurement of biometric indicators in a mammalian subject are described. Biometric indicators of interest include hematocrit plasma volume volume of distribution and glomerular filtration rate. The methods are especially applicable to subjects with rapid blood loss and to subjects with unstable hematocrits. Hematocrit may be measured by administering an injectate with a dynamic fluorescent marker and a static fluorescent marker or a single static marker with two fluorescent tags into the vascular system of the subject and monitoring the emission intensities of the markers or fluorescent tags over a period of time. Hematocrit may then be calculated using a calibrated spectrometric analyzer by determining the raw ratio of the markers at T0 calculating the apparent hematocrit and applying a correction factor.

No. of Pages : 41 No. of Claims : 33

(12) PATENT APPLICATION PUBLICATION
(19) INDIA
(22) Date of filing of Application :12/08/2014
(21) Application No.6773/DELNP/2014 A
(43) Publication Date : 22/05/2015

(54) Title of the invention : COMPOSITE CORNER BEAD

(51) International classification :E04C2/04,E04F13/06
(31) Priority Document No :13/357919
(32) Priority Date :25/01/2012
(33) Name of priority country :U.S.A.
(86) International Application No :PCT/US2013/021838
Filing Date :17/01/2013
(87) International Publication No :WO 2013/112344
(61) Patent of Addition to Application Number :NA
Filing Date :NA
(62) Divisional to Application Number :NA
Filing Date :NA

(71)**Name of Applicant :**
1)UNITED STATES GYPSUM COMPANY
Address of Applicant :550 West Adams Street Chicago Illinois 60661 3676 U.S.A.
(72)**Name of Inventor :**
1)ROSENSTIEL Terry L.
2)IMMORDINO Salvatore C.
3)ROSENTHAL Guy L.
4)BOSS Daniel Eugene
5)WASCOW Joseph Z.
6)RETZKE Brian
7)OSHGAN Steve
8)JACKSON Nick
9)MIKLOSZ Mark

(57) Abstract :
A preformed corner bead (10) for use in wallboard construction is provided and includes an elongate strip (20) formed of a web of at least one layer of non woven fabric a resin impregnating the strip.

No. of Pages : 20 No. of Claims : 10

(12) PATENT APPLICATION PUBLICATION
(19) INDIA
(22) Date of filing of Application :12/08/2014
(21) Application No.6774/DELNP/2014 A
(43) Publication Date : 22/05/2015

(54) Title of the invention : INTEGRATED TURBOCHARGER CASTING

(51) International classification :F02B39/00,F01D25/24,B22D17/00
(31) Priority Document No :61/590721
(32) Priority Date :25/01/2012
(33) Name of priority country :U.S.A.
(86) International Application No :PCT/US2013/021848
Filing Date :17/01/2013
(87) International Publication No :WO 2013/112345
(61) Patent of Addition to Application Number :NA
Filing Date :NA
(62) Divisional to Application Number :NA
Filing Date :NA

(71)**Name of Applicant :**
1)BORGWARNER INC.
Address of Applicant :Patent Department 3850 Hamlin Road Auburn Hills Michigan 48326 U.S.A.
(72)**Name of Inventor :**
1)MALINS Simon
2)RYLANCE Sean
3)FINLEY James
4)DANIELS Rob

(57) Abstract :
A bearing housing or integrated turbocharger housing with the oil and optionally air and water galleries included as as cast features thereby avoiding the problems design limitations and expense associated with conventional post casting machining. The method of casting preferably uses lost foam casting or a technique similar to lost foam casting but in which a ceramic shell is formed on the foam form prior to metal casting but can use any of a variety of casting techniques or a combination of two or more techniques.

No. of Pages : 46 No. of Claims : 16

(12) PATENT APPLICATION PUBLICATION
(19) INDIA
(22) Date of filing of Application :12/08/2014
(21) Application No.6775/DELNP/2014 A
(43) Publication Date : 22/05/2015

(54) Title of the invention : VACUUM SWITCH

(51) International classification	:H01H33/66,H01H33/662,H01H33/666
(31) Priority Document No	:2012072992
(32) Priority Date	:28/03/2012
(33) Name of priority country	:Japan
(86) International Application No	:PCT/JP2013/051025
Filing Date	:21/01/2013
(87) International Publication No	:WO 2013/145816
(61) Patent of Addition to Application Number	:NA
Filing Date	:NA
(62) Divisional to Application Number	:NA
Filing Date	:NA

(71)**Name of Applicant :**
1)HITACHI LTD.
Address of Applicant :6 6 Marunouchi 1 chome Chiyoda ku Tokyo 1008280 Japan
(72)**Name of Inventor :**
1)IITSUKA Shinsuke
2)TSUCHIYA Kenji
3)MORITA Ayumu
4)SHIRAI Hiroyuki

(57) Abstract :
In order to obtain a vacuum switch for cutting off a single phase alternating current in which a higher insulation performance is achieved and the reliability can be improved the vacuum switch is characterized in comprising three serially connected vacuum valves (VI) designed for three phase alternating current. More specifically the three vacuum valves designed for three phase alternating current are characterized in being connected so that a current flowing through an adjacent vacuum valve flows in the same direction or being connected so that a current flowing through an adjacent vacuum valve flows in a different direction.

No. of Pages : 27 No. of Claims : 4

(12) PATENT APPLICATION PUBLICATION
(21) Application No.3269/DELNP/2014 A
(19) INDIA
(22) Date of filing of Application :23/04/2014
(43) Publication Date : 22/05/2015

(54) Title of the invention : FLOW CONTROL VALVE

(51) International classification :F02M69/32,F16K31/04
(31) Priority Document No :2011243155
(32) Priority Date :07/11/2011
(33) Name of priority country :Japan
(86) International Application No :PCT/JP2012/078679
Filing Date :06/11/2012
(87) International Publication No :WO 2013/069618
(61) Patent of Addition to Application Number :NA
Filing Date :NA
(62) Divisional to Application Number :NA
Filing Date :NA

(71)**Name of Applicant :**
1)MIKUNI CORPORATION
Address of Applicant :13 11 Sotokanda 6 chome Chiyoda ku Tokyo 1010021 Japan
(72)**Name of Inventor :**
1)SAKAGUCHI Masayoshi

(57) Abstract :
Provided is a flow control valve that has a simplified rattle prevention structure can maintain a low controlled flow rate and can be reduced in size. This flow control valve is provided with the following: a rotor (6) that is provided around a rotating shaft (8) and due to electromagnetic forces rotates together with said rotating shaft (8) as a single unit; a valve element (9) that is screwed into an internal thread (93) at one end of the rotating shaft (8) and as the rotating shaft (8) rotates moves along the axis of the rotating shaft (8) to open and close an opening through which a fluid passes; a shaft support member (14) that is provided at the other end of the rotating shaft (8) rotatably supports the rotating shaft (8) and restricts movement towards said other end of the rotating shaft (8); and a compression coil spring (10) that biases the valve element (9) towards the other end of the rotating shaft (8) along the axis of the rotating shaft (8).

No. of Pages : 33 No. of Claims : 4

(12) PATENT APPLICATION PUBLICATION
(21) Application No.364/DELNP/2012 A
(19) INDIA
(22) Date of filing of Application :13/01/2012
(43) Publication Date : 22/05/2015

(54) Title of the invention : PROCESS AND APPARATUS FOR DENOXING OF FLUE GASES

(51) International classification :B01D 53/86
(31) Priority Document No :A 1109/2009
(32) Priority Date :15/07/2009
(33) Name of priority country :Austria
(86) International Application No :PCT/AT2010/000212
Filing Date :14/06/2010
(87) International Publication No :WO 2011/006175
(61) Patent of Addition to Application Number :NA
Filing Date :NA
(62) Divisional to Application Number :NA
Filing Date :NA

(71)**Name of Applicant :**
1)SCHEUCH GMBH
Address of Applicant :WEIERFING 68, A-4971 AUROLZMUNSTER, AUSTRIA
(72)**Name of Inventor :**
1)MANFRED LISBERGER

(57) Abstract :
The invention relates to a process and to an apparatus for denoxing flue gases (A) comprising carbon monoxide (CO) and/or gaseous organic substances with at least one catalyst (6) for catalytic reduction of the nitrogen oxide NOX and a heat exchanger (11) for heating the flue gases (A) from recovery of the residual heat of the denoxed flue gases (A) before the catalytic reduction to a reaction temperature (TR) of 160°C to 500°C. For the best possible denoxing of the flue gases (A) with simultaneous minimization of the externally supplied energy needed, it is envisaged that the losses associated with the heat movement in the heat exchanger (11) will be compensated for by providing at least one stage (12) for regenerative postcombustion of the carbon monoxide (CO) and/or of the gaseous organic substances.

No. of Pages : 16 No. of Claims : 10

(12) PATENT APPLICATION PUBLICATION
(19) INDIA
(22) Date of filing of Application :02/01/2015
(21) Application No.49/DELNP/2015 A
(43) Publication Date : 22/05/2015

(54) Title of the invention : WIRELESS BRANCH CIRCUIT ENERGY MONITORING SYSTEM

(51) International classification :H02H1/00,H02H1/06
(31) Priority Document No :13/493076
(32) Priority Date :11/06/2012
(33) Name of priority country :U.S.A.
(86) International Application No :PCT/US2013/044712
Filing Date :07/06/2013
(87) International Publication No :WO 2013/188229
(61) Patent of Addition to Application Number :NA
Filing Date :NA
(62) Divisional to Application Number :NA
Filing Date :NA

(71)**Name of Applicant :**
1)SCHNEIDER ELECTRIC USA INC.
Address of Applicant :1415 S. Roselle Road Palatine Illinois 60067 U.S.A.
(72)**Name of Inventor :**
1)ERGER Robert
2)BROGHAMMER William
3)LARSON Brett
4)REID Paul A.

(57) Abstract :
A circuit breaker (112) such as a miniature circuit breaker that wirelessly communicates state and fault information to a main energy monitoring module (116). The wireless circuit breaker (112) includes a transceiver (114) and a power supply that harvests energy inductively from the line current conductor without the need for a connection to a neutral conductor. The wireless circuit breaker (112) can be implemented in the same package as existing circuit breakers eliminating the need to replace the panel (110) when upgrading to a system that employs a main energy monitoring module (116). The wireless circuit breaker (112) can also include an energy storage device for supplying power to the circuit breaker (112) after it has tripped allowing the circuit breaker (112) to transmit information after a trip. The main energy monitoring module (116) includes a processor (130) and a gateway (120) for evaluating and transmitting information received from the circuit breaker (112) to other applications such as webpages (126) and smartphones (128).

No. of Pages : 23 No. of Claims : 18

(12) PATENT APPLICATION PUBLICATION
(19) INDIA
(22) Date of filing of Application :13/08/2014
(21) Application No.6832/DELNP/2014 A
(43) Publication Date : 22/05/2015

(54) Title of the invention : FLEXIBLE FILM WITH SURFACE RELIEF AND USE THEREOF IN ELECTRO ACTIVE OPTICAL SYSTEMS

(51) International classification :G02B5/02,G02B5/18
(31) Priority Document No :61/587260
(32) Priority Date :17/01/2012
(33) Name of priority country :U.S.A.
(86) International Application No :PCT/US2013/021754
Filing Date :16/01/2013
(87) International Publication No :WO 2013/109637
(61) Patent of Addition to Application Number :NA
Filing Date :NA
(62) Divisional to Application Number :NA
Filing Date :NA

(71)**Name of Applicant :**
1)HPO ASSETS LLC
Address of Applicant :312 Farmington Ave. Farmington CT 06032 U.S.A.
(72)**Name of Inventor :**
1)TRAJKOVSKA Anita
2)BLUM Ronald D.
3)KOKONASKI William

(57) Abstract :
The present invention relates generally to flexible thin films for use in electro active optical systems. Embodiments of the invention include thin films having diffractive structures on at least one surface of the film and methods of making such films. Embodiments of the invention also include lens blanks that comprise such thin films. Embodiments of the invention also include methods of making lens blanks that comprise such thin films.

No. of Pages : 31 No. of Claims : 34

(12) PATENT APPLICATION PUBLICATION
(19) INDIA
(22) Date of filing of Application :05/08/2014
(21) Application No.6588/DELNP/2014 A
(43) Publication Date : 22/05/2015

(54) Title of the invention : AGRICULTURAL SQUARE BALER

(51) International classification :A01F15/10,B30B9/30
(31) Priority Document No :BE2012/0105
(32) Priority Date :22/02/2012
(33) Name of priority country :Belgium
(86) International Application No :PCT/EP2013/053145
Filing Date :18/02/2013
(87) International Publication No :WO 2013/124227
(61) Patent of Addition to Application Number :NA
Filing Date :NA
(62) Divisional to Application Number :NA
Filing Date :NA

(71)**Name of Applicant :**
1)CNH INDUSTRIAL BELGIUM NV
Address of Applicant :Leon Claeysstraat 3A B 8210 Zedelgem Belgium
(72)**Name of Inventor :**
1)VERHAEGHE Didier

(57) Abstract :
The present invention is related to an agricultural square baler equipped with a pre compression chamber (1) supplied with crop material by a suitable supply means and configured to guide crop material from said supply means towards and into the baling chamber (2) where the rectangular bales are formed. At least one of the upper and lower walls (7 6) of the pre compression chamber is formed by a conveyor belt (10) arranged to move from the supply means towards said baling chamber. The conveyor belt comprises at least two portions (15 16) configured to exert different friction forces on a batch of crop material so that the high friction portion (16) is capable of moving the batch into the baling chamber whereas the low friction portion (15) exerts a low force on said batch thereby preventing material to be prematurely moved towards said baling chamber. The invention is equally related to methods for providing crop material to the pre compression chamber of a square baler according to the invention.

No. of Pages : 19 No. of Claims : 14

(12) PATENT APPLICATION PUBLICATION
(21) Application No.6589/DELNP/2014 A
(19) INDIA
(22) Date of filing of Application :05/08/2014
(43) Publication Date : 22/05/2015

(54) Title of the invention : SYSTEM FOR SUPPORT AND THERMAL CONTROL

(51) International classification :A47C31/00,A47C21/04
(31) Priority Document No :61/588784
(32) Priority Date :20/01/2012
(33) Name of priority country :U.S.A.
(86) International Application No :PCT/IB2013/000443
Filing Date :18/01/2013
(87) International Publication No :WO 2013/108128
(61) Patent of Addition to Application Number :NA
Filing Date :NA
(62) Divisional to Application Number :NA
Filing Date :NA

(71)**Name of Applicant :**
1)HUNTLEIGH TECHNOLOGY LIMITED
Address of Applicant :Arjohuntleigh House Houghton Hall Business Park Houghton Regis Dunstable Bedfordshire LU5 5XF U.K.
(72)**Name of Inventor :**
1)VRZALIK John
2)HONG Kz
3)PICKERING Matthew

(57) Abstract :
In various embodiments a support surface cooling device (500) configured to reduce the skin temperature of a patient. The support surface cooling device (500) comprises an air mover (540) a first conduit (545) a first layer (510)comprising a vapor permeable material a second layer (520) comprising a spacer material and a third layer (530) wherein: the second layer (520) is between the first layer (510) and the third layer (530) the first conduit (545) is in fluid communication with the second layer (520) and the air mover (540) and the air mover (540) is configured to create air flow through the spacer material toward the air mover (540).

No. of Pages : 22 No. of Claims : 32

(12) PATENT APPLICATION PUBLICATION
(19) INDIA
(22) Date of filing of Application :14/08/2014
(21) Application No.6844/DELNP/2014 A
(43) Publication Date : 22/05/2015

(54) Title of the invention : PLATED STEEL PLATE FOR HOT PRESSING AND HOT PRESSING METHOD OF PLATED STEEL PLATE

(51) International classification :C23C28/00,B21D22/20,C21D1/18
(31) Priority Document No :2012029396
(32) Priority Date :14/02/2012
(33) Name of priority country :Japan
(86) International Application No :PCT/JP2013/053070
Filing Date :08/02/2013
(87) International Publication No :WO 2013/122004
(61) Patent of Addition to Application Number :NA
Filing Date :NA
(62) Divisional to Application Number :NA
Filing Date :NA

(71)**Name of Applicant :**
1)NIPPON STEEL & SUMITOMO METAL CORPORATION
Address of Applicant :6 1 Marunouchi 2 chome Chiyoda ku Tokyo 1008071 Japan
(72)**Name of Inventor :**
1)YAMANAKA Shintaro
2)MAKI Jun
3)KUROSAKI Masao
4)KUSUMI Kazuhisa

(57) Abstract :
A plated steel plate for hot pressing having hot lubricity film adhesion spot weldability and corrosion resistance after coating and a method of hot pressing said steel plate are provided. This plated steel plate for hot pressing and hot pressing method of said plated steel plate are characterized in that an Al plating layer is formed on one or both sides of the steel plate and on the Al plating layer a surface film layer is formed containing one or more Zn compounds selected from a group consisting of Zn hydroxides Zn phosphates and Zn organic acids.

No. of Pages : 36 No. of Claims : 8

(12) PATENT APPLICATION PUBLICATION
(19) INDIA
(22) Date of filing of Application :14/08/2014
(21) Application No.6845/DELNP/2014 A
(43) Publication Date : 22/05/2015

(54) Title of the invention : METHODS AND APPARATUS TO FORM ELECTRONIC CIRCUITRY ON OPHTHALMIC DEVICES

(51) International classification :G02C7/08,G02C7/04,H01L23/58
(31) Priority Document No :61/604206
(32) Priority Date :28/02/2012
(33) Name of priority country :U.S.A.
(86) International Application No :PCT/US2013/028318
Filing Date :28/02/2013
(87) International Publication No :WO 2013/130803
(61) Patent of Addition to Application Number :NA
Filing Date :NA
(62) Divisional to Application Number :NA
Filing Date :NA

(71)**Name of Applicant :**
1)JOHNSON & JOHNSON VISION CARE INC.
Address of Applicant :7500 Centurion Parkway Jacksonville Florida 32256 U.S.A.
(72)**Name of Inventor :**
1)PUGH Randall B.
2)TONER Adam
3)OTTS Daniel B.
4)RIALL James Daniel
5)HUMPHREYS Scott R.
6)FLITSCH Frederick A.
7)HIGHAM Camille

(57) Abstract :
This invention discloses an energized Ophthalmic Device with incorporated low energy consuming modes. In some embodiments media inserts with incorporated low energy consuming modes are described.

No. of Pages : 26 No. of Claims : 21

(12) PATENT APPLICATION PUBLICATION
(21) Application No.6846/DELNP/2014 A
(19) INDIA
(22) Date of filing of Application :14/08/2014
(43) Publication Date : 22/05/2015

(54) Title of the invention : SYSTEM OF VIBRATION DAMPING CONTROL FOR CRANE AND METHOD OF VIBRATION DAMPING CONTROL FOR CRANE

(51) International classification :B66C15/00,B66C13/12,B66C19/00
(31) Priority Document No :2012260252
(32) Priority Date :28/11/2012
(33) Name of priority country :Japan
(86) International Application No :PCT/JP2013/066750
Filing Date :18/06/2013
(87) International Publication No :WO 2014/083873
(61) Patent of Addition to Application Number :NA
Filing Date :NA
(62) Divisional to Application Number :NA
Filing Date :NA

(71)**Name of Applicant :**
1)MITSUBISHI HEAVY INDUSTRIES MACHINERY TECHNOLOGY CORPORATION
Address of Applicant :6 22 Kan on Shin machi 4 Chome Nishi ku Hiroshima shi Hiroshima 7338553 Japan
(72)**Name of Inventor :**
1)UCHIDA Koji
2)KUSANO Toshiyuki

(57) Abstract :
The present invention is a system of vibration damping control for a crane which reduces the vibration of a support structure (20) during shaking of a crane (10) provided with a trolley (24) that moves over a girder (22) and boom (23) provided to a top side of the support structure wherein the system is provided with: a vibration detection sensor (30) for detecting vibration; a trolley drive unit for driving during movement over the girder (22) and boom (23); a calculation unit for calculating a vibration speed of the support structure on the basis of a detection signal of the vibration detection sensor (30); a determination unit for determining from a calculation signal of the calculation unit whether vibration damping control of the support structure (20) is necessary; and a command signal transmission unit for transmitting to the trolley drive unit a command signal for adjusting the moving speed of the trolley (24) when the determination unit has determined that vibration damping control is necessary. The present invention thereby makes it possible to facilitate vibration damping retrofitting and enable the shaking caused by strong winds or earthquakes of a wide range of frequencies and magnitudes to be dealt with.

No. of Pages : 30 No. of Claims : 5

(12) PATENT APPLICATION PUBLICATION
(19) INDIA
(22) Date of filing of Application :11/08/2014
(21) Application No.6712/DELNP/2014 A
(43) Publication Date : 22/05/2015

(54) Title of the invention : METHOD AND COMMUNICATION NODE FOR MAPPING AN ENHANCED PHYSICAL DOWNLINK CONTROL CHANNEL EPDCCH MESSAGE

(51) International classification :H04L5/00
(31) Priority Document No :61/702817
(32) Priority Date :19/09/2012
(33) Name of priority country :U.S.A.
(86) International Application No :PCT/SE2013/050078
Filing Date :30/01/2013
(87) International Publication No :WO 2014/046591
(61) Patent of Addition to Application Number :NA
Filing Date :NA
(62) Divisional to Application Number :NA
Filing Date :NA

(71)**Name of Applicant :**
1)TELEFONAKTIEBOLAGET L M ERICSSON (PUBL)
Address of Applicant :S 164 83 Stockholm Sweden
(72)**Name of Inventor :**
1)FRENNE Mattias
2)CHENG Jung Fu
3)ERIKSSON Erik
4)LARSSON Daniel
5)FURUSKOG Johan
6)KOORAPATY Havish

(57) Abstract :
A method in a communication node for mapping symbols of an Enhanced Physical Downlink Control Channel EPDCCH message is provided. The EPDCCH comprises one or more aggregation levels. For each aggregation level an EPDCCH message is constituted by a set of Control Channel Elements eCCEs. Each eCCE is mapped to a set of multiple enhanced Resource Element Groups eREGs wherein each eREG is a group of Resource Elements REs in a Physical Resource Block PRB pair. The communication node maps the symbols of the EPDCCH message to the set of REs that constitutes the multiple eREGs that the set of eCCEs correspond to. The order in which the EPDCCH symbols are mapped to the set of REs is dependent on the aggregation level. Publ.

No. of Pages : 51 No. of Claims : 30

(12) PATENT APPLICATION PUBLICATION
(21) Application No.6713/DELNP/2014 A
(19) INDIA
(22) Date of filing of Application :11/08/2014
(43) Publication Date : 22/05/2015

(54) Title of the invention : CURRENCY NOTE PROCESSING DEVICE AND CURRENCY NOTE PROCESSING METHOD

(51) International classification :G07D9/00
(31) Priority Document No :2012028620
(32) Priority Date :13/02/2012
(33) Name of priority country :Japan
(86) International Application No :PCT/JP2013/052856
Filing Date :07/02/2013
(87) International Publication No :WO 2013/121968
(61) Patent of Addition to Application Number :NA
Filing Date :NA
(62) Divisional to Application Number :NA
Filing Date :NA

(71)**Name of Applicant :**
1)GLORY LTD.
Address of Applicant :3 1 Shimoteno 1 chome Himeji shi Hyogo 6708567 Japan
(72)**Name of Inventor :**
1)KUBO Tomoyuki
2)ISHINO Kazuki
3)OZAKI Hirofumi

(57) Abstract :
A currency note processing device (1) is provided with: multiple storage sections (52) that store a currency note; a transport section (18) that to a storage section (52) transports the currency note which was inserted in a device body (2); an identification section (40) that is provided on the transport section (18) and reads the serial number of the currency note inserted in the device body (2); and a control section (70) that controls the transport section (18). The control section (70) controls the transport section (18) such that a currency note with a serial number that the identification section(40) was able to read is stored in a different storage section (52) from a storage section (52) in which a currency note with a serial number that the identification section (40) was unable to read is stored.

No. of Pages : 46 No. of Claims : 18

(12) PATENT APPLICATION PUBLICATION
(21) Application No.6851/DELNP/2014 A
(19) INDIA
(22) Date of filing of Application :14/08/2014
(43) Publication Date : 22/05/2015

(54) Title of the invention : CATHETER STRUCTURE AND METHOD FOR LOCATING TISSUE IN A BODY ORGAN AND SIMULTANEOUSLY DELIVERING THERAPY AND EVALUATING THE THERAPY DELIVERED

(51) International classification :A61B5/05
(31) Priority Document No :13/409138
(32) Priority Date :01/03/2012
(33) Name of priority country :U.S.A.
(86) International Application No :PCT/US2013/026008
Filing Date :14/02/2013
(87) International Publication No :WO 2013/130270
(61) Patent of Addition to Application Number :NA
Filing Date :NA
(62) Divisional to Application Number :NA
Filing Date :NA

(71)**Name of Applicant :**
1)NOAR Mark D.
Address of Applicant :11 Alterwood Lane Owings Mills MD 21117 U.S.A.
(72)**Name of Inventor :**
1)NOAR Mark D.

(57) Abstract :
A catheter structure is provided for use with an electroviscerogram (EVG) system. The catheter structure includes an elongated tube structure having distal and proximal ends. Three electrodes are associated with distal end of the tube structure and are constructed and arranged obtain signals relating to myoelectrical activity internally of an intra abdominal organ to thereby locate targeted tissue that includes main pathways of electrical generation in the organ. Therapy delivery structure associated with the distal end of the tube structure and separate from the electrodes is constructed and arranged to provide therapy at the targeted tissue simultaneously as the electrodes obtain the signals at the targeted tissue so that effectiveness of the therapy can be monitored.

No. of Pages : 20 No. of Claims : 21

(12) PATENT APPLICATION PUBLICATION
(19) INDIA
(22) Date of filing of Application :14/08/2014
(21) Application No.6852/DELNP/2014 A
(43) Publication Date : 22/05/2015

(54) Title of the invention : A DUAL FUNCTIONAL CHAIR

(51) International classification :A47C9/00,A47C7/02
(31) Priority Document No :398195
(32) Priority Date :21/02/2012
(33) Name of priority country :Poland
(86) International Application No :PCT/IB2013/000114
Filing Date :29/01/2013
(87) International Publication No :WO 2013/124718
(61) Patent of Addition to Application Number :NA
Filing Date :NA
(62) Divisional to Application Number :NA
Filing Date :NA

(71)**Name of Applicant :**
1)HUMAN PLUS S.C.
Address of Applicant :Podg³rna 34 PL 05 822 Milan³wek Poland
(72)**Name of Inventor :**
1)KIERYLLO Andrzej
2)KIERYLLO Mateusz

(57) Abstract :
The object of the invention is a dual functional chair with a dividable seat to be used in a sitting and kneeling sitting configuration in which the seat consists of a front part (1) of the seat convertible into a knee rest and connected rotationally and slidably or rotationally only to a movable front arm of a base of the seat rotating on the axis of a rotational mechanism (3) and of the rear part (4) of the seat having a variable angle of inclination connected via a rotational mechanism (5) to a rear arm (6) of the base of the seat.

No. of Pages : 30 No. of Claims : 10

(12) PATENT APPLICATION PUBLICATION
(21) Application No.6799/DELNP/2014 A
(19) INDIA
(22) Date of filing of Application :13/08/2014
(43) Publication Date : 22/05/2015

(54) Title of the invention : THERMOSTATIC VALVE WITH A SLEEVE

(51) International classification :G05D23/02
(31) Priority Document No :1251613
(32) Priority Date :22/02/2012
(33) Name of priority country :France
(86) International Application No :PCT/EP2013/053549
Filing Date :22/02/2013
(87) International Publication No :WO 2013/124410
(61) Patent of Addition to Application Number :NA
Filing Date :NA
(62) Divisional to Application Number :NA
Filing Date :NA

(71)**Name of Applicant :**
1)VERNET
Address of Applicant :21/27 Route dArpajon F 91340 Ollainville France
(72)**Name of Inventor :**
1)MARAUX Thierry

(57) Abstract :
This valve comprises a housing a sleeve controlling the circulation of a fluid through the housing a thermostatic element for controlling the movement of the sleeve along the central axis thereof a compression spring for returning the fixed and mobile portions of said thermostatic element towards each other and a support bracket for said spring. In order to improve the mechanical strength of said valve even when the housing thereof is made from a plastic material said housing is provided internally with a transverse bridge including a central span which engages both with the fixed portion of the thermostatic element to fixedly bind said thermostatic element to the housing and with the bracket to fixedly bind said bracket to the housing.

No. of Pages : 23 No. of Claims : 11

(12) PATENT APPLICATION PUBLICATION
(19) INDIA
(22) Date of filing of Application :14/08/2014
(21) Application No.6872/DELNP/2014 A
(43) Publication Date : 22/05/2015

(54) Title of the invention : OPTICAL IMAGING SYSTEM AND 3D DISPLAY APPARATUS

(51) International classification :G02B27/22,H04N13/04
(31) Priority Document No :61/586809
(32) Priority Date :15/01/2012
(33) Name of priority country :U.S.A.
(86) International Application No :PCT/IB2013/000812
Filing Date :15/01/2013
(87) International Publication No :WO 2013/105000
(61) Patent of Addition to Application Number :NA
Filing Date :NA
(62) Divisional to Application Number :NA
Filing Date :NA

(71)**Name of Applicant :**
1)ZECOTEK DISPLAY SYSTEM LTD. PTE.
Address of Applicant :Unit 1120 21331 Gordon Way Richmond BC V6W 1J9 Canada
(72)**Name of Inventor :**
1)GOULANIAN Emine
2)KOSTROV Nikolai

(57) Abstract :
An optical imaging system and related 3D display apparatus for forming different perspective views of a 3 dimensional image by transforming optical beams emanating from pixels located on a display pixel surface displaying 2 dimensional patterns and projecting the transformed optical beams in a field of view is disclosed herein The optical imaging system comprises: an array of selecting light guide elements for reducing a radiating aperture of each pixel; a lens array of converging micro lenses; a displacement mechanism for moving the lens array relative to the array of light guide elements in a respective plane: and a sensor system for sensing the position of the lens array relative to the array of light guide elements The lens array together with the array of light guide elements are configured to provide at least one viewing zone in the field of view and form respective perspective views in each viewing zone by projecting therein the transformed optical beams.

No. of Pages : 19 No. of Claims : 2

(12) PATENT APPLICATION PUBLICATION
(21) Application No.6873/DELNP/2014 A
(19) INDIA
(22) Date of filing of Application :14/08/2014
(43) Publication Date : 22/05/2015

(54) Title of the invention : REINFORCED ELECTROLYTE MEMBRANE AND METHOD FOR PRODUCING SAME

(51) International classification :C25B13/02,B01J39/20,B01J47/12
(31) Priority Document No :2012039532
(32) Priority Date :27/02/2012
(33) Name of priority country :Japan
(86) International Application No :PCT/JP2013/054964
Filing Date :26/02/2013
(87) International Publication No :WO 2013/129399
(61) Patent of Addition to Application Number :NA
Filing Date :NA
(62) Divisional to Application Number :NA
Filing Date :NA

(71)**Name of Applicant :**
1)ASAHI GLASS COMPANY LIMITED
Address of Applicant :5 1 Marunouchi 1 chome Chiyoda ku Tokyo 1008405 Japan
(72)**Name of Inventor :**
1)YAMAKI Yasushi
2)KUSANO Hiromitsu

(57) Abstract :
Provided are: a reinforced electrolyte membrane that is less susceptible to damage such as cracks at the time of handling the reinforced electrolyte membrane from after the production thereof to before conditioning operations for alkali chloride electrolysis and at the time of installing the reinforced electrolyte membrane in an electrolytic tank for conditioning operations; and a method for producing said reinforced electrolyte membrane. Disclosed is a reinforced electrolyte membrane (1) in which an electrolyte membrane (10) including a fluorine containing polymer having an ion exchange group is reinforced with a woven fabric (20) made of reinforcing yarns (22) and sacrifice yarns (24) wherein: the sacrifice yarns (24) remain in the electrolyte membrane (10); voids are formed around the sacrifice yarns (24) and between the electrolyte membrane (10); and given that A is the sum of the cross sectional area of the sacrifice yarn (24) and the cross sectional area of the void and B is the cross sectional area of the sacrifice yarn (24) 2000 μm<A<6000 μm and 0.3=B/A<1.0 are satisfied.

No. of Pages : 29 No. of Claims : 9

(12) PATENT APPLICATION PUBLICATION
(19) INDIA
(22) Date of filing of Application :14/08/2014
(21) Application No.6874/DELNP/2014 A
(43) Publication Date : 22/05/2015

(54) Title of the invention : MEDIA PROCESSING APPARATUS

(51) International classification :B65H29/51,B65H5/28,G07D9/00
(31) Priority Document No :2012073996
(32) Priority Date :28/03/2012
(33) Name of priority country :Japan
(86) International Application No :PCT/JP2013/056359
Filing Date :07/03/2013
(87) International Publication No :WO 2013/146173
(61) Patent of Addition to Application Number :NA
Filing Date :NA
(62) Divisional to Application Number :NA
Filing Date :NA

(71)**Name of Applicant :**
1)OKI ELECTRIC INDUSTRY CO. LTD.
Address of Applicant :1 7 12 Toranomon Minato ku Tokyo 1058460 Japan
(72)**Name of Inventor :**
1)HATA Naoki
2)ASAMURA Masamitsu
3)KASHIWABUCHI Masashi
4)IWATSUKI Kei

(57) Abstract :
A temporary holding unit (15) bridges respective bridge portions (53A) and (53B) along a shaft (25X) at a plurality of points separated in a circumferential direction in groove portions (52A) and (52B) of a drum (25). In this manner the temporary holding unit (15) is capable of preventing an outer tape (31) or an inner tape (33) from falling off toward the groove portion (52A) or the groove portion (52B) and forestalling damage to the tapes. Also the temporary holding unit (15) is capable of accurately determining the presence or absence of a bill (BL) by passing a drum sensing light (LD) which is emitted toward the groove portions (52A) and (52B) in aperture portions (54A) and (54B).

No. of Pages : 51 No. of Claims : 8

(12) PATENT APPLICATION PUBLICATION
(19) INDIA
(22) Date of filing of Application :14/08/2014
(21) Application No.6860/DELNP/2014 A
(43) Publication Date : 22/05/2015

(54) Title of the invention : MONOBENZOATE USEFUL AS A PLASTICIZER IN ADHESIVE PREPARATIONS

(51) International classification :C09J133/08
(31) Priority Document No :61/598372
(32) Priority Date :14/02/2012
(33) Name of priority country :U.S.A.
(86) International Application No :PCT/US2013/026137
Filing Date :14/02/2013
(87) International Publication No :WO 2013/123188
(61) Patent of Addition to Application Number :NA
Filing Date :NA
(62) Divisional to Application Number :NA
Filing Date :NA

(71)**Name of Applicant :**
1)EMERALD KALAMA CHEMICAL LLC.
Address of Applicant :1296 Third Street NW Kalama Washington 98625 U.S.A.
(72)**Name of Inventor :**
1)ARENDT William D.
2)MCBRIDE Emily

(57) Abstract :
A unique monobenzoate useful as a plasticizer in polymeric dispersions such as adhesives comprising 3 phenyl propyl benzoate a monobenzoate ester used as a flavor and fragrance additive but not heretofore utilized as a plasticizer for polymeric dispersions such as adhesives caulks and sealants. The inventive monobenzoate provides a suitable non phthalate lower VOC alternative plasticizer that is compatible with a wide variety of polymers. Advantages rendered by the use of the inventive monobenzoate include among other things excellent viscosity response low viscosity viscosity stability improved rheology good film formation and comparable or better adhesion peel strength set time open time chalk point and MFFT compared with that achieved by traditional plasticizers. The inventive monobenzoate also has an excellent health safety and environmental profile and provides a viable alternative for adhesives used in food contact applications such as packaging where migratory concerns are an issue.

No. of Pages : 63 No. of Claims : 11

(12) PATENT APPLICATION PUBLICATION
(19) INDIA
(22) Date of filing of Application :14/08/2014
(21) Application No.6861/DELNP/2014 A
(43) Publication Date : 22/05/2015

(54) Title of the invention : MONOBENZOATE USEFUL AS A PLASTICIZER/COALESCENT IN POLYMERIC DISPERSIONS

(51) International classification :C09D11/10
(31) Priority Document No :61/598372
(32) Priority Date :14/02/2012
(33) Name of priority country :U.S.A.
(86) International Application No :PCT/US2013/026083
Filing Date :14/02/2013
(87) International Publication No :WO 2013/123149
(61) Patent of Addition to Application Number :NA
Filing Date :NA
(62) Divisional to Application Number :NA
Filing Date :NA

(71)**Name of Applicant :**
1)EMERALD KALAMA CHEMICAL LLC
Address of Applicant :1296 Third Street NW Kalama Washington 98625 U.S.A.
(72)**Name of Inventor :**
1)ARENDT William D.
2)MCBRIDE Emily

(57) Abstract :
A unique monobenzoate useful as a plasticizer or coalescent for polymeric dispersions including without limitation architectural and other coatings paints OEM coatings special purpose coatings overprint varnishes inks nail polish floor polishes and the like. The monobenzoate comprises 3 pheny propyl benzoate a benzoate ester previously known as a flavoring and fragrance agent but not previously utilized as a plasticizer or coalescent in polymeric applications. The inventive monobenzoate provides a suitable non phthalate lower VOC content alternative plasticizer or coalescent that is compatible with a wide variety of polymers. Depending on the application the advantages rendered by the use of the inventive monobenzoate include among other things excellent solvating properties viscosity stability improved rheology good film formation and comparable or better gloss hardness adhesion water and alkali resistance scrub and rub resistance block resistance color density dry to touch time open time and MFFT compared with that achieved by traditional plasticizers or coalescents.

No. of Pages : 53 No. of Claims : 16

(12) PATENT APPLICATION PUBLICATION
(19) INDIA
(22) Date of filing of Application :14/08/2014
(21) Application No.6862/DELNP/2014 A
(43) Publication Date : 22/05/2015

(54) Title of the invention : ALLOCATION OF COMMUNICATION RESOURCES

(51) International classification :H04W72/06
(31) Priority Document No :NA
(32) Priority Date : -
(33) Name of priority country :
(86) International Application No :PCT/EP2012/053621
Filing Date :02/03/2012
(87) International Publication No :WO 2013/127466
(61) Patent of Addition to Application Number :NA
Filing Date :NA
(62) Divisional to Application Number :NA
Filing Date :NA

(71)**Name of Applicant :**
1)NOKIA SOLUTIONS AND NETWORKS OY
Address of Applicant :Karaportti 3 FI 02610 Espoo Finland
(72)**Name of Inventor :**
1)LUNTTILA Timo Erkki
2)TIIROLA Esa Tapani
3)FREDERIKSEN Frank

(57) Abstract :
The disclosure relates to allocation of resources for wireless communications. An index for a uplink control resource is determined in accordance with a predefined rule. The determining takes into account an index associated with a physical downlink resource and the amount of downlink resources to be mapped on the uplink control resource.

No. of Pages : 19 No. of Claims : 24

(12) PATENT APPLICATION PUBLICATION
(21) Application No.6863/DELNP/2014 A
(19) INDIA
(22) Date of filing of Application :14/08/2014
(43) Publication Date : 22/05/2015

(54) Title of the invention : WATERPROOF CONNECTOR

(51) International classification :H01R13/52
(31) Priority Document No :2012044944
(32) Priority Date :01/03/2012
(33) Name of priority country :Japan
(86) International Application No :PCT/JP2013/000940
Filing Date :20/02/2013
(87) International Publication No :WO 2013/128848
(61) Patent of Addition to Application Number :NA
Filing Date :NA
(62) Divisional to Application Number :NA
Filing Date :NA

(71)**Name of Applicant :**
1)TYCO ELECTRONICS JAPAN G.K.
Address of Applicant :3 5 8 Hisamoto Takatsu ku Kawasaki shi Kanagawa 2138535 Japan
(72)**Name of Inventor :**
1)SHIGA Katsumi

(57) Abstract :
The purpose of the present invention is to provide a waterproof connector that can deter liquids from the outside from reaching a sealing member without increasing the size of the connector. The waterproof connector (10) is provided with: an inner housing (12) that retains terminals and has an outer periphery that mates with a counterpart side housing (22) with the sealing member (33) therebetween; and an outer housing (40) that is disposed on the outside of the inner housing (12) and accommodates the inner housing (12) and the counterpart side housing (22). The outer housing (40) has a lock arm (43) that is locked to the counterpart side housing (22) and a liquid blocking wall (37) is provided protruding from a part of the outer periphery of the inner housing (12) below the lock arm (43) said liquid blocking wall (37) blocking off a rim part (22A) of the counterpart side housing (22).

No. of Pages : 22 No. of Claims : 6

(12) PATENT APPLICATION PUBLICATION
(21) Application No.6840/DELNP/2014 A
(19) INDIA
(22) Date of filing of Application :14/08/2014
(43) Publication Date : 22/05/2015

(54) Title of the invention : PROCESS FOR PREPARING CARBONATE AND DIOL PRODUCTS

(51) International classification :C07D317/38
(31) Priority Document No :13/406728
(32) Priority Date :28/02/2012
(33) Name of priority country :U.S.A.
(86) International Application No :PCT/US2012/067526
Filing Date :03/12/2012
(87) International Publication No :WO 2013/130147
(61) Patent of Addition to Application Number :NA
Filing Date :NA
(62) Divisional to Application Number :NA
Filing Date :NA

(71)**Name of Applicant :**
1)SAUDI BASIC INDUSTRIES CORPORATION
Address of Applicant :P.O. Box 5101 Riyadh 11422 Saudi Arabia
(72)**Name of Inventor :**
1)ZHANG Xiankuan

(57) Abstract :
A method of forming a cyclic carbonate product is carried out by reacting an alkylene oxide such as ethylene oxide with carbon dioxide in the presence of a metal organic framework (MOF) catalyst with less than 0.5 mol% of any potassium or quaternary ammonium salts present based on moles of alkylene oxide feed in a reaction zone under reaction conditions to form a cyclic carbonate product. The cyclic carbonate product may be optionally fed as a crude carbonate product that does not undergo any purification or separation other than the optional removal of any portion of unreacted alkylene oxide carbon dioxide and light hydrocarbon gases to a second reaction zone containing a transesterification catalyst along with an aliphatic monohydric alcohol. The cyclic carbonate product and monohydric alcohol are allowed to react under reaction conditions to form the dialkyl carbonate and diol products.

No. of Pages : 24 No. of Claims : 16

(12) PATENT APPLICATION PUBLICATION
(21) Application No.6841/DELNP/2014 A
(19) INDIA
(22) Date of filing of Application :14/08/2014
(43) Publication Date : 22/05/2015

(54) Title of the invention : METHOD OF MANAGING FUEL INTAKE IN INDIVIDUALS TO ENHANCE ATHLETIC PERFORMANCE

(51) International classification :G06F19/00
(31) Priority Document No :61/600199
(32) Priority Date :17/02/2012
(33) Name of priority country :U.S.A.
(86) International Application No :PCT/US2013/026475
Filing Date :15/02/2013
(87) International Publication No :WO 2013/123418
(61) Patent of Addition to Application Number :NA
Filing Date :NA
(62) Divisional to Application Number :NA
Filing Date :NA

(71)**Name of Applicant :**
1)PEPSICO INC.
Address of Applicant :700 Anderson Hill Road Purchase NY 10577 U.S.A.
(72)**Name of Inventor :**
1)STEIN Kimberly
2)TIPPET Melissa

(57) Abstract :
A method for assisting individuals with managing their fuel consumption at different points throughout athletic training or competitions is provided which includes collecting information about the individual participating in the athletic event in addition to information about the event itself providing feedback to the individual based on this information monitoring the individual s energy level at the moment of sweat and using this information to tailor a fueling plan for the individual. In one aspect the individual may provide her information and access her customized fueling plan using a web based browser or a mobile device application.

No. of Pages : 28 No. of Claims : 15

(12) PATENT APPLICATION PUBLICATION
(19) INDIA
(22) Date of filing of Application :14/08/2014
(21) Application No.6842/DELNP/2014 A
(43) Publication Date : 22/05/2015

(54) Title of the invention : THERMOPLASTIC SHEET FOR A HEADS UP DISPLAY SYSTEM

(51) International classification	:B32B17/10,C08K5/00,G02B27/01
(31) Priority Document No	:1251718
(32) Priority Date	:24/02/2012
(33) Name of priority country	:France
(86) International Application No	:PCT/FR2013/050369
Filing Date	:22/02/2013
(87) International Publication No	:WO 2013/124596
(61) Patent of Addition to Application Number	:NA
Filing Date	:NA
(62) Divisional to Application Number	:NA
Filing Date	:NA

(71)**Name of Applicant :**
1)SAINT GOBAIN GLASS FRANCE
Address of Applicant :18 avenue dAlsace F 92400 Courbevoie France
(72)**Name of Inventor :**
1)SABLAYROLLES Jean
2)CLABAU Frdric
3)LABROT Michael

(57) Abstract :
The invention relates to a thermoplastic sheet for producing a transparent glazing for a motor vehicle or a building intended for displaying information in particular a laminated glazing said sheet being characterised in that it comprises a compound having an absorption band in the ultraviolet range and whereof the diffuse reflection spectrum on the basis of the incident radiation energy is characterised by a value V on the reflectance curve determined by the point of intersection between the tangent (1) at the inflection point of said curve and the asymptote (2) of same at higher energies between 3.06 and 3.65 eV.

No. of Pages : 21 No. of Claims : 15

(12) PATENT APPLICATION PUBLICATION
(19) INDIA
(22) Date of filing of Application :14/08/2014
(21) Application No.6843/DELNP/2014 A
(43) Publication Date : 22/05/2015

(54) Title of the invention : USE OF IMPROVED N ALKYL PYRROLIDONE SOLVENTS

(51) International classification :C11D7/32,C11D7/50,A01N25/02
(31) Priority Document No :2012/0037
(32) Priority Date :17/01/2012
(33) Name of priority country :Belgium
(86) International Application No :PCT/EP2013/050852
Filing Date :17/01/2013
(87) International Publication No :WO 2013/107822
(61) Patent of Addition to Application Number :NA
Filing Date :NA
(62) Divisional to Application Number :NA
Filing Date :NA

(71)**Name of Applicant :**
1)TAMINCO
Address of Applicant :Pantserschipstraat 207 B 9000 Gent Belgium
(72)**Name of Inventor :**
1)VANDEPUTTE Bart
2)MOONEN Kristof
3)ROOSE Peter

(57) Abstract :
The present invention is concerned with the use of pyrrolidones selected from the group consisting of N n butylpyrrolidone N isobutylpyrrolidone N t butylpyrrolidone N n pentylpyrrolidone N (methyl substituted butyl)pyrrolidones ring methyl substituted N propyl and N butyl pyrrolidones and N (methoxypropyl) pyrrolidone as replacement solvents in specific applications wherein N methylpyrrolidone (NMP) N ethyl 2 pyrrolidone (NEP) dimethyl acetamide (DMAc) and/or dimethyl formamide (DMF) is the appropriate solvent to be used. The invention is also concerned with a solvent comprising NMP NEP DMAc or DMF and one or more pyrrolidones selected from said group as well as a solvent comprising a second solvent which is a replacement solvent for NMP NEP DMAc or DMF and one or more selected from said group.

No. of Pages : 25 No. of Claims : 18

(12) PATENT APPLICATION PUBLICATION
(21) Application No.6811/DELNP/2014 A
(19) INDIA
(22) Date of filing of Application :13/08/2014
(43) Publication Date : 22/05/2015

(54) Title of the invention : ENTERPRISE LEVEL DATA MANAGEMENT

(51) International classification :G06F17/00
(31) Priority Document No :13/413748
(32) Priority Date :07/03/2012
(33) Name of priority country :U.S.A.
(86) International Application No :PCT/IL2012/000240
Filing Date :19/06/2012
(87) International Publication No :WO 2013/132476
(61) Patent of Addition to Application Number :NA
Filing Date :NA
(62) Divisional to Application Number :NA
Filing Date :NA

(71)**Name of Applicant :**
1)VARONIS SYSTEMS LTD.
Address of Applicant :7 Arie Shenkar Street Gav Yam Building 2 Herzliya 46120 Israel
(72)**Name of Inventor :**
1)FAITELSON Yakov
2)KORKUS Ohad
3)BASS David
4)KRETZER KATZIR Ophir

(57) Abstract :
A system for indexing data of interest within a multiplicity of data elements residing on multiple platforms in an enterprise the system including background data characterization functionality operable for characterizing the multiplicity of data elements to provide a background data characterization output the characterizing being based on at least one of at least one access metric thereof the at least one access metric being selected from data access permissions and actual data access history thereof and metadata thereof background data classification functionality operative to classify the data of interest based at least partially on the background data characterization output and providing a background data of interest classification output and indexing functionality operative to index the data of interest based at least partially on the background data of interest classification output.

No. of Pages : 18 No. of Claims : 16

(12) PATENT APPLICATION PUBLICATION
(19) INDIA
(22) Date of filing of Application :13/08/2014
(21) Application No.6812/DELNP/2014 A
(43) Publication Date : 22/05/2015

(54) Title of the invention : METALLOENZYME INHIBITOR COMPOUNDS

(51) International classification :A01N43/40,A01N43/647,A01N43/48
(31) Priority Document No :61/589064
(32) Priority Date :20/01/2012
(33) Name of priority country :U.S.A.
(86) International Application No :PCT/US2013/022317
Filing Date :18/01/2013
(87) International Publication No :WO 2013/110002
(61) Patent of Addition to Application Number :NA
Filing Date :NA
(62) Divisional to Application Number :NA
Filing Date :NA

(71)**Name of Applicant :**
1)VIAMET PHARMACEUTICALS INC.
Address of Applicant :4505 Emperor Blvd. Suite 300 Durham NC 27703 U.S.A.
(72)**Name of Inventor :**
1)HOEKSTRA William J.
2)SCHOTZINGER Robert J.
3)RAFFERTY Stephen W.

(57) Abstract :
The present disclosure describes compounds having agricultural fungicidal activity.

No. of Pages : 82 No. of Claims : 21

(12) PATENT APPLICATION PUBLICATION
(19) INDIA
(22) Date of filing of Application :13/08/2014
(21) Application No.6813/DELNP/2014 A
(43) Publication Date : 22/05/2015

(54) Title of the invention : ELECTROACTIVE LENS WITH MULTIPLE DEPTH DIFFRACTIVE STRUCTURES

(51) International classification :G02F1/29
(31) Priority Document No :61/603615
(32) Priority Date :27/02/2012
(33) Name of priority country :U.S.A.
(86) International Application No :PCT/US2012/033995
Filing Date :18/04/2012
(87) International Publication No :WO 2013/130115
(61) Patent of Addition to Application Number :NA
Filing Date :NA
(62) Divisional to Application Number :NA
Filing Date :NA

(71)**Name of Applicant :**
1)E VISION SMART OPTICS INC.
Address of Applicant :5241 Valleypark Drive Roanoke VA 24019 MCGROARTY John P. Sterne Kessler Goldstein & Fox P.L.L.C. 1100 New York Avenue N. W. Washington DC 20005 3934 202 371 2540 U.S.A.
(72)**Name of Inventor :**
1)VAN HEUGTEN Anthony

(57) Abstract :
Certain exemplary embodiments can provide a system machine device manufacture circuit composition of matter and/or user interface adapted for and/or resulting from and/or a method and/or machine readable medium comprising machine implementable instructions for activities that can comprise and/or relate to switch a diffractive first electro active lens from a first power state corresponding to a first optical power to a second power state corresponding to a second optical power that differs from said first optical power.

No. of Pages : 43 No. of Claims : 20

(12) PATENT APPLICATION PUBLICATION
(19) INDIA
(22) Date of filing of Application :13/08/2014
(21) Application No.6814/DELNP/2014 A
(43) Publication Date : 22/05/2015

(54) Title of the invention : DEVICE WITH CO MOLDED CLOSURE ONE WAY VALVE VARIABLE VOLUME STORAGE CHAMBER AND ANTI SPRITZ FEATURE AND RELATED METHOD

(51) International classification :B05B11/00,F16K15/14,B65D47/34
(31) Priority Document No :61/589266
(32) Priority Date :20/01/2012
(33) Name of priority country :U.S.A.
(86) International Application No :PCT/US2013/022320
Filing Date :18/01/2013
(87) International Publication No :WO 2013/110003
(61) Patent of Addition to Application Number :NA
Filing Date :NA
(62) Divisional to Application Number :NA
Filing Date :NA

(71)**Name of Applicant :**
1)DR. PY INSTITUTE LLC
Address of Applicant :201 Housatonic Avenue New Milford CT 06776 U.S.A.
(72)**Name of Inventor :**
1)PY Daniel

(57) Abstract :
A device has a first part with a valve seat and storage chamber and a second part with a flexible valve cover and actuator. The flexible valve cover and valve seat form a normally closed valve seam there between. The valve cover is movable in response to fluid at an inlet to the seam exceeding a valve opening pressure of the one way valve between (i) a normally closed position with valve cover and valve seat in contact with each other and defining the normally closed seam and (ii) a second position with at least a portion of the valve cover spaced away from the valve seat to allow the fluid to pass through the seam.

No. of Pages : 63 No. of Claims : 67

(12) PATENT APPLICATION PUBLICATION
(21) Application No.6815/DELNP/2014 A
(19) INDIA
(22) Date of filing of Application :13/08/2014
(43) Publication Date : 22/05/2015

(54) Title of the invention : MULTIPLE DOSE SYRINGE AND METHOD

(51) International classification :A61M5/48
(31) Priority Document No :61/587500
(32) Priority Date :17/01/2012
(33) Name of priority country :U.S.A.
(86) International Application No :PCT/US2013/021865
Filing Date :17/01/2013
(87) International Publication No :WO 2013/109706
(61) Patent of Addition to Application Number :NA
Filing Date :NA
(62) Divisional to Application Number :NA
Filing Date :NA

(71)**Name of Applicant :**
1)DR. PY INSTITUTE LLC
Address of Applicant :201 Housatonic Avenue New Milford CT 06776 U.S.A.
(72)**Name of Inventor :**
1)PY Daniel

(57) Abstract :
A multiple dose syringe has a first valve defining a first valve opening pressure and a second valve defining a second valve opening pressure. A storage chamber in fluid communication with the second valve stores multiple doses of a substance therein and includes an outlet for dispensing multiple doses of the stored substance therethrough. A compression surface is movable between first and second positions and defines a compression chamber between the compression surface and the first valve. Movement of the compression surface in a direction from the first position toward the second position dispenses substance in the compression chamber through the first valve and out of the syringe. Movement of the compression surface in a direction from the second position toward the first position causes substance to flow from the storage chamber through the second valve and into the compression chamber.

No. of Pages : 82 No. of Claims : 59

(12) PATENT APPLICATION PUBLICATION
(19) INDIA
(22) Date of filing of Application :07/08/2014
(21) Application No.6662/DELNP/2014 A
(43) Publication Date : 22/05/2015

(54) Title of the invention : METHOD FOR TREATING INTESTINAL DISEASES PRESENTING AT LEAST ONE INFLAMMATORY COMPONENT

(51) International classification :A61K31/573,A61K9/28,A61K9/20
(31) Priority Document No :61/598308
(32) Priority Date :13/02/2012
(33) Name of priority country :U.S.A.
(86) International Application No :PCT/EP2013/052838
Filing Date :13/02/2013
(87) International Publication No :WO 2013/120881
(61) Patent of Addition to Application Number :NA
Filing Date :NA
(62) Divisional to Application Number :NA
Filing Date :NA

(71)**Name of Applicant :**
1)COSMO TECHNOLOGIES LIMITED
Address of Applicant :Connolly Building 42 43 Amiens Street Dublin 1 Ireland
2)SANTARUS INC.
(72)**Name of Inventor :**
1)MORO Luigi
2)PROEHL Gerald Thomas
3)WIERENGA Wendell
4)HUANG Michael Fangching
5)BALLARD II Emerson David

(57) Abstract :
The present disclosure relates to methods for treating intestinal diseases presenting at least one inflammatory component such as inflammatory bowel disease or diverticular disease and/or maintaining remission of intestinal diseases presenting at least one inflammatory component such as inflammatory bowel disease (IBD) or diverticular disease using budesonide MMX compositions.

No. of Pages : 59 No. of Claims : 35

(12) PATENT APPLICATION PUBLICATION
(21) Application No.6664/DELNP/2014 A
(19) INDIA
(22) Date of filing of Application :07/08/2014
(43) Publication Date : 22/05/2015

(54) Title of the invention : GAMING MACHINE INCLUDING MOVING WILD SYMBOLS

(51) International classification :G07F17/32
(31) Priority Document No :13/356558
(32) Priority Date :23/01/2012
(33) Name of priority country :U.S.A.
(86) International Application No :PCT/EP2013/051161
Filing Date :22/01/2013
(87) International Publication No :WO 2013/110620
(61) Patent of Addition to Application Number :NA
Filing Date :NA
(62) Divisional to Application Number :NA
Filing Date :NA

(71)**Name of Applicant :**
1)NOVOMATIC AG
Address of Applicant :Wiener Strasse 158 A 2352 Gumpoldskirchen Austria
(72)**Name of Inventor :**
1)BURGHARD Berndt
2)DEGENHART Jan

(57) Abstract :
A gaming machine having standard and bonus game play features includes a housing an interface attached to a housing and a computer in operative communication with the interface. The computer has a memory and a processor. The memory stores game play instructions and a set of symbols including game symbols scatter symbols and wild symbols. The game play instructions include instructions for a standard game play mode and bonus game play mode. During standard game play mode the interface displays a matrix of symbols representing an arrangement of reels and the computer calculates payouts based on the symbols within the matrix. When a predetermined number of scatter symbols appear in the matrix of symbols in standard game play mode bonus game play commences and at least some of the scatter symbols are transformed into wild symbols during bonus game play. Bonus game play mode includes multiple reel spins. The wild symbols presented during bonus game play mode occupy more than one location in the matrix of symbols and move during each reel spin to a random location in the matrix of symbols. The random location in the matrix of symbols excludes matrix locations previously occupied by a wild symbol during an immediately previous reel spin during bonus game play.

No. of Pages : 18 No. of Claims : 7

(12) PATENT APPLICATION PUBLICATION
(19) INDIA
(22) Date of filing of Application :07/08/2014
(21) Application No.6665/DELNP/2014 A
(43) Publication Date : 22/05/2015

(54) Title of the invention : BLOOD COLLECTION ASSEMBLY HAVING A MULTI FUNCTION SHIELD

(51) International classification :A61B5/15,A61B5/154,A61B5/155
(31) Priority Document No :61/608195
(32) Priority Date :08/03/2012
(33) Name of priority country :U.S.A.
(86) International Application No :PCT/US2013/029589
Filing Date :07/03/2013
(87) International Publication No :WO 2013/134498
(61) Patent of Addition to Application Number :NA
Filing Date :NA
(62) Divisional to Application Number :NA
Filing Date :NA

(71)**Name of Applicant :**
1)BECTON DICKINSON AND COMPANY
Address of Applicant :1 Becton Drive Franklin Lakes Pennsylvania 07417 U.S.A.
(72)**Name of Inventor :**
1)SIM Lee Hoong
2)SIM Tiong Yee

(57) Abstract :
A needle assembly includes a housing having proximal and distal ends an IV cannula projecting distally from the housing and an IV shield having an engagement. The housing has a shield seat and the IV cannula has a distal tip. The IV shield has a pre use position where the IV shield covers the distal tip of the IV cannula and the engagement is disengaged from the shield seat and a use position where the engagement is engaged with the shield seat and the IV shield is adapted to move between a non shielded position in which the distal tip is exposed and a shielded position in which the distal tip is shielded by the IV shield.

No. of Pages : 40 No. of Claims : 25

(12) PATENT APPLICATION PUBLICATION
(19) INDIA
(22) Date of filing of Application :07/08/2014
(21) Application No.6666/DELNP/2014 A
(43) Publication Date : 22/05/2015

(54) Title of the invention : PALLET SYSTEM FOR DISPLAY STORAGE AND TRANSPORTATION OF BOTTLES

(51) International classification :B65D19/24,B65D71/70,A47F7/28
(31) Priority Document No :61/592099
(32) Priority Date :30/01/2012
(33) Name of priority country :U.S.A.
(86) International Application No :PCT/US2013/023746
Filing Date :30/01/2013
(87) International Publication No :WO 2013/116271
(61) Patent of Addition to Application Number :NA
Filing Date :NA
(62) Divisional to Application Number :NA
Filing Date :NA

(71)**Name of Applicant :**
1)POLYMER SOLUTIONS INTERNATIONAL INC.
Address of Applicant :P.O. Box 369 Medford NJ 08055 0369 U.S.A.
(72)**Name of Inventor :**
1)KELLY Daniel E.
2)SPADAVECCHIA John A.
3)FAVARON James A.
4)JACOBS Jeff

(57) Abstract :
A pallet system may include at least one pallet having a tray portion and a pedestal portion. The tray portion may include a generally flat platform having a perimeter edge. The pedestal portion may form at least one receptacle extending beneath the platform for receiving a neck portion of a bottle positioned beneath the platform.

No. of Pages : 23 No. of Claims : 19

(12) PATENT APPLICATION PUBLICATION
(19) INDIA
(22) Date of filing of Application :04/01/2014
(21) Application No.71/DELNP/2014 A
(43) Publication Date : 22/05/2015

(54) Title of the invention : FILTERING UNIT AND RELATIVE FILTERING CARTRIDGE

(51) International classification :B01D29/13,B01D46/24
(31) Priority Document No :RE2011A000059
(32) Priority Date :29/07/2011
(33) Name of priority country :Italy
(86) International Application No :PCT/IB2012/001057
Filing Date :23/05/2012
(87) International Publication No :WO 2013/017921
(61) Patent of Addition to Application Number :NA
Filing Date :NA
(62) Divisional to Application Number :NA
Filing Date :NA

(71)**Name of Applicant :**
1)UFI INNOVATION CENTER S.R.L.
Address of Applicant :20 Viale Trento I 38061 Ala (Trento) Italy
(72)**Name of Inventor :**
1)GIRONDI Giorgio

(57) Abstract :
A filtering unit (10) comprising a casing (20) provided with at least one inlet (32) one outlet (33) and one support body (42) provided with abutment surfaces (44) adapted to removably support a filtering cartridge (50) contained within the casing (20) and adapted to divide the internal volume of the casing (20) into two chambers (21 22) respectively connected with the inlet (32) and the outlet (33) so as to filter the fluid flowing from the inlet (32) towards the outlet (33) the filtering cartridge (50) comprising at least one coupling element (55) configured to be snap coupled to the support body (42) following a first axial translation for mutual approaching between the filtering cartridge (50) and the support body (42) whose distinctive characteristic lies in the fact that it comprises cam means (57 58) operating between the coupling element (55) and the support body (42) so as to radially bend the coupling element (55) in a release position for disengaging the coupling element (55) from the support element (42) following a further limited mutual axial translation between the filtering cartridge (50) and the support body (42) moving in the same direction with respect to the first approaching translation the cam means (57 58) being configured so as to keep the coupling element (55) in release position following a slight mutual rotation between the filtering cartridge (50) and the support body (42).

No. of Pages : 30 No. of Claims : 13

(12) PATENT APPLICATION PUBLICATION
(19) INDIA
(22) Date of filing of Application :14/08/2014
(21) Application No.6869/DELNP/2014 A
(43) Publication Date : 22/05/2015

(54) Title of the invention : ANTIFIBROTIC COMPOUNDS AND USES THEREOF

(51) International classification	:C07D471/04,A61K31/437,A61P9/00
(31) Priority Document No	:61/632582
(32) Priority Date	:26/01/2012
(33) Name of priority country	:U.S.A.
(86) International Application No	:PCT/US2013/023324
Filing Date	:26/01/2013
(87) International Publication No	:WO 2013/112959
(61) Patent of Addition to Application Number	:NA
Filing Date	:NA
(62) Divisional to Application Number	:NA
Filing Date	:NA

(71)**Name of Applicant :**
1)ANGION BIOMEDICA CORP.
Address of Applicant :51 Charles Lindbergh Blvd. Uniondale NY 11553 U.S.A.
(72)**Name of Inventor :**
1)PANICKER Bijoy
2)MISHRA Rama K.
3)JUNG Dawoon
4)OEHLEN Lambertus J.W.M.
5)LIM Dong Sung

(57) Abstract :
The present invention provides compounds having the general structural formula (I) and pharmaceutically acceptable derivatives thereof as described generally and in classes and subclasses herein and additionally provides pharmaceutical compositions thereof and methods for the use thereof for the treatment of any of a number of conditions or diseases involving abnormal or excessive fibrosis.

No. of Pages : 58 No. of Claims : 20

(12) PATENT APPLICATION PUBLICATION
(19) INDIA
(22) Date of filing of Application :14/08/2014
(21) Application No.6870/DELNP/2014 A
(43) Publication Date : 22/05/2015

(54) Title of the invention : RAIL VEHICLE BRAKE DEVICE

(51) International classification :B60L7/16,B60L7/24,B60T17/22
(31) Priority Document No :10 2012 203 132.4
(32) Priority Date :29/02/2012
(33) Name of priority country :Germany
(86) International Application No :PCT/EP2013/054074
Filing Date :28/02/2013
(87) International Publication No:WO 2013/127942
(61) Patent of Addition to Application Number :NA
Filing Date :NA
(62) Divisional to Application Number :NA
Filing Date :NA

(71)**Name of Applicant :**
1)SIEMENS AKTIENGESELLSCHAFT
Address of Applicant :Wittelsbacherplatz 2 80333 M¼nchen Germany
(72)**Name of Inventor :**
1)SCHWINN Jean Pascal
2)STTZLE Thorsten
3)F–RSTER Till
4)HASSLER Stefan
5)HEILMANN Reiner
6)WIESAND Manfred

(57) Abstract :
The invention relates to a rail vehicle brake device comprising at least one first electrodynamic brake (24; 80) which comprises one drive unit (16) which has at least one drive motor (18) and one power supply unit (20) for supplying the drive motor (18) in a traction mode of the drive unit (16) and at least one brake control unit (22; 82) which has the respective power supply unit (20) and at least one brake control unit (28 30; 84) which controls in a first brake mode the respective power supply unit (20) for providing a braking effect. According to the invention in order to optimise handling particularly the introduction of a fall back measure in case of a braking effect loss in respect of the cause thereof the rail vehicle braking device has at least one sensor unit (58; 86) which is designed to detect at least one braking effect parameter (B1) for the first braking mode of the brake (24; 80) and at least one first brake monitoring device (53; 190) which is assigned to the first brake (24; 80) and which is independent of the brake control unit (22; 82) which is designed to consider in a first monitoring mode the braking effect parameter (B1) for the introduction of a fall back measure concerning the brake (24; 80).

No. of Pages : 54 No. of Claims : 18

(12) PATENT APPLICATION PUBLICATION
(21) Application No.6871/DELNP/2014 A
(19) INDIA
(22) Date of filing of Application :14/08/2014
(43) Publication Date : 22/05/2015

(54) Title of the invention : VEHICLE DRIVING FORCE CONTROL APPARATUS

(51) International classification :B60T8/17,B60T7/12
(31) Priority Document No :NA
(32) Priority Date :NA
(33) Name of priority country :NA
(86) International Application No :PCT/JP2012/054667
Filing Date :26/02/2012
(87) International Publication No :WO 2013/125049
(61) Patent of Addition to Application Number :NA
Filing Date :NA
(62) Divisional to Application Number :NA
Filing Date :NA

(71)**Name of Applicant :**
1)TOYOTA JIDOSHA KABUSHIKI KAISHA
Address of Applicant :1 Toyota cho Toyota shi Aichi 4718571 Japan
(72)**Name of Inventor :**
1)TAKEUCHI Keisuke
2)TSURUOKA Kazuo
3)TANAHASHI Toshio
4)AGATA Yoshimitsu
5)KANEKO Hiroki
6)KANEHARA Yoji

(57) Abstract :
A vehicle driving force control apparatus determines required braking force on the basis of the amount of operation of a brake operation mechanism operated by a driver for deceleration and controls braking force by a power plant including a driving force source that produces accelerating force and braking force and braking force by a brake mechanism that produces braking force by an operation of the brake operation mechanism in a coordinated manner such that the braking force of the vehicle as a whole is matched with the required braking force. The vehicle driving force control apparatus detects acceleration information including lateral acceleration of the vehicle and controls the braking force by the power plant on the basis of the acceleration information when the brake operation mechanism is operated.

No. of Pages : 27 No. of Claims : 7

(12) PATENT APPLICATION PUBLICATION
(19) INDIA
(22) Date of filing of Application :04/01/2014
(21) Application No.72/DELNP/2014 A
(43) Publication Date : 22/05/2015

(54) Title of the invention : METHOD OF FORMING POLYSILANES AND POLYCARBOSILANES IN THE PRESENCE OF A METAL SILICIDE

(51) International classification :C08G77/60,C08L83/16
(31) Priority Document No :61/497577
(32) Priority Date :16/06/2011
(33) Name of priority country :U.S.A.
(86) International Application No :PCT/US2012/042475
Filing Date :14/06/2012
(87) International Publication No :WO 2012/174250
(61) Patent of Addition to Application Number :NA
Filing Date :NA
(62) Divisional to Application Number :NA
Filing Date :NA

(71)**Name of Applicant :**
1)DOW CORNING CORPORATION
Address of Applicant :2200 West Salzburg Road Midland MI 48686 0994 U.S.A.
(72)**Name of Inventor :**
1)KATSOULIS Dimitris Elias
2)LARSEN Robert Thomas

(57) Abstract :
A mixture of at least one polysilane and at least one polycarbosilane is formed in the presence of a metal silicide. The mixture is formed utilizing a method that includes the step of combining the metal silicide and an alkyl halide in a reactor at a temperature of from 200°C to 600°C. The alkyl halide has the formula RX wherein R is C C alkyl and X is halo. This method forms high yield mixtures of the at least one polysilane and the at least one polycarbosilane. Additionally the mixture is time and cost effective and allows the mixture to be formed in a predictable and controlled manner. Moreover the components used in this method can be easily recycled and/or re used in other processes.

No. of Pages : 20 No. of Claims : 25

(12) PATENT APPLICATION PUBLICATION
(21) Application No.6833/DELNP/2014 A
(19) INDIA
(22) Date of filing of Application :14/08/2014
(43) Publication Date : 22/05/2015

(54) Title of the invention : INKJET AQUEOUS PIGMENT DISPERSION INK COMPOSITION INKJET RECORDING METHOD AND PIGMENT

(51) International classification	:C09D11/00,B41J2/01,B41M5/00	(71)**Name of Applicant :**
(31) Priority Document No	:2012020620	**1)NIPPON KAYAKU KABUSHIKI KAISHA**
(32) Priority Date	:02/02/2012	Address of Applicant :11 2 Fujimi 1 chome Chiyoda ku Tokyo 1028172 Japan
(33) Name of priority country	:Japan	(72)**Name of Inventor :**
(86) International Application No	:PCT/JP2013/051507	**1)KAWAGUCHI Akira**
Filing Date	:24/01/2013	**2)KUWAHARA Akio**
(87) International Publication No	:WO 2013/115071	
(61) Patent of Addition to Application Number	:NA	
Filing Date	:NA	
(62) Divisional to Application Number	:NA	
Filing Date	:NA	

(57) Abstract :
Provided are: an inkjet aqueous pigment dispersion which achieves high pigment concentration exhibits favorable redispersion properties after drying and does not exhibit changes in ink properties even when stored for a long time; and an ink composition using the aqueous pigment dispersion. This inkjet aqueous pigment dispersion contains a pigment (I) a liquid medium (II) and a polymer dispersion agent (III). The polymer dispersion agent (III) is an A B block polymer obtained by copolymerizing via a living radical polymerization method by using a mixture of an organic tellurium compound represented by formula (1) and an organic ditellurium compound represented by formula (2) or the like as a polymerization initiator. Therein the monomer for configuring the A block is at least one type of monomer represented by formula (3) and the monomer for configuring the B block is benzyl methacrylate and/or benzyl acrylate.

No. of Pages : 75 No. of Claims : 13

(12) PATENT APPLICATION PUBLICATION
(19) INDIA
(22) Date of filing of Application :14/08/2014
(21) Application No.6834/DELNP/2014 A
(43) Publication Date : 22/05/2015

(54) Title of the invention : MACHINE FOR PRODUCING CIRCULAR PRODUCTS BY MEANS OF LAYER BY LAYER ADDITION

(51) International classification :B29C67/00,B22F3/105
(31) Priority Document No :12/02318
(32) Priority Date :29/08/2012
(33) Name of priority country :France
(86) International Application No :PCT/EP2013/066083
Filing Date :31/07/2013
(87) International Publication No :WO 2014/032895
(61) Patent of Addition to Application Number :NA
Filing Date :NA
(62) Divisional to Application Number :NA
Filing Date :NA

(71)**Name of Applicant :**
1)CARPYZ SAS
Address of Applicant :215 rue Jean Jacques Rousseau F 92136 Issy les Moulineaux France
(72)**Name of Inventor :**
1)CARROUSET Pierre
2)CARROUSET Nicole
3)CARROUSET Gabrielle

(57) Abstract :
The invention relates to a machine for the layer by layer production of objects comprising: a circular rotary container arranged in the lower part (B) the inside thereof being provided with independently and vertically motor driven cylindrical crowns (7); and a stationary part that tops the container. The machine also includes at least one production unit comprising a first station (1) for distributing the layer of product a second station (2) for evening out the thickness of the layer a third station (3) for controlling and regulating the temperature of the next layer a fourth station (4) for solidifying the useful surfaces of the layer of product a fifth station (5) for controlling and regulating the temperature of the layer that has just been deposited and a sixth station (6) for treating and impregnating the layer.

No. of Pages : 10 No. of Claims : 6

(12) PATENT APPLICATION PUBLICATION
(19) INDIA
(22) Date of filing of Application :14/08/2014
(21) Application No.6835/DELNP/2014 A
(43) Publication Date : 22/05/2015

(54) Title of the invention : IDENTIFYING FORCES ON A TOOTH

(51) International classification :A61C7/08,A61C19/04,A61C7/00
(31) Priority Document No :13/365167
(32) Priority Date :02/02/2012
(33) Name of priority country :U.S.A.
(86) International Application No :PCT/IB2013/000143
Filing Date :01/02/2013
(87) International Publication No :WO 2013/114197
(61) Patent of Addition to Application Number :NA
Filing Date :NA
(62) Divisional to Application Number :NA
Filing Date :NA

(71)**Name of Applicant :**
1)ALIGN TECHNOLOGY INC.
Address of Applicant :2560 Orchard Parkway San Jose CA 95131 U.S.A.
(72)**Name of Inventor :**
1)MATOV Vadim
2)FARADJEV Igor
3)PESENTI Bastien
4)GEYN Sergey
5)TENZIN Konstantin

(57) Abstract :
The present disclosure includes computing device related, systems, and methods for identifying force placed on a tooth are described herein. One method includes receiving initial orthodontic data (IOD) including teeth data; creating a virtual set of teeth from the IOD; receiving dental appliance information including at least one of dental appliance material properties and characteristics; virtually placing a dental appliance, formed from the dental appliance information, onto the virtual set of teeth; and determining one or more forces applied to the teeth based on information from the IOD and dental appliance information.

No. of Pages : 38 No. of Claims : 20

(12) PATENT APPLICATION PUBLICATION
(21) Application No.6836/DELNP/2014 A
(19) INDIA
(22) Date of filing of Application :14/08/2014
(43) Publication Date : 22/05/2015

(54) Title of the invention : TURBINE DENTAL DRILL MECHANISM AND TURBINE HEAD WITH SAME MOUNTED THEREIN

(51) International classification :A61C1/05,A61C1/08
(31) Priority Document No :201220034360.X
(32) Priority Date :22/01/2012
(33) Name of priority country :China
(86) International Application No :PCT/CN2013/070837
Filing Date :22/01/2013
(87) International Publication No :WO 2013/107431
(61) Patent of Addition to Application Number :NA
Filing Date :NA
(62) Divisional to Application Number :NA
Filing Date :NA

(71)**Name of Applicant :**
1)ZHENGZHOU ZEZHENG TECHNICAL SERVICES LTD.
Address of Applicant :Baolong City Square A Blocks 1 226 South of Nongye Road West of Tianze Road Zhengdong New District Zhengzhou Henan 450000 China
(72)**Name of Inventor :**
1)LIU Xiaoxia

(57) Abstract :
Disclosed is a turbine dental drill mechanism comprising a turbine (1) and a turbine shaft (2). A balancing chamber (3) is provided on the mechanism with an automatic balancing component provided in the balancing chamber (3) the automatic balancing component being a metal ball sand grains or a flexible body (4). Providing a metal ball in the balancing chamber (3) can enhance the balance; providing sand grains in the balancing chamber (3) can reduce noise while also enhancing the balance; and providing a flexible body (4) in the balancing chamber (3) can eliminate noise and adjust the weight thereby achieving automatic balancing. Disclosed is a dental drill head composed of a head casing (101) a wind wheel and a bearing (102). The wind wheel comprises a wind wheel shaft (103) and wind wheel blades (104) with a dynamic balancing hole (112) provided at an end of the wind wheel shaft (103) a dynamic balancing body (113) being provided inside the dynamic balancing hole (112). Providing the dynamic balancing body (113) inside the wind wheel shaft (103) can automatically adjust the imbalance of the rotating parts on the basis of keeping the original outside dimensions of the dental drill unchanged. Furthermore a spline hole (121) can be provided at an end of the wind wheel shaft (103) with a spline (122) inside the spline hole (121) in a clearance fit. The end of the spline (122) extending out of the wind wheel shaft (103) is fixed to a dynamic balancing plate (123) and the dynamic balancing plate (123) can significantly adjust the dynamic balance thereby reducing the costs of high precision machining.

No. of Pages : 31 No. of Claims : 27

(12) PATENT APPLICATION PUBLICATION
(21) Application No.6757/DELNP/2014 A
(19) INDIA
(22) Date of filing of Application :12/08/2014
(43) Publication Date : 22/05/2015

(54) Title of the invention : STEEL SHEET PLATED STEEL SHEET METHOD FOR PRODUCING STEEL SHEET AND METHOD FOR PRODUCING PLATED STEEL SHEET

(51) International classification :C22C38/00,C21D9/46,C22C38/14
(31) Priority Document No :2012032591
(32) Priority Date :17/02/2012
(33) Name of priority country :Japan
(86) International Application No :PCT/JP2013/052836
Filing Date :07/02/2013
(87) International Publication No :WO 2013/121963
(61) Patent of Addition to Application Number :NA
Filing Date :NA
(62) Divisional to Application Number :NA
Filing Date :NA

(71)**Name of Applicant :**
1)NIPPON STEEL & SUMITOMO METAL CORPORATION
Address of Applicant :6 1 Marunouchi 2 chome Chiyoda ku Tokyo 1008071 Japan
(72)**Name of Inventor :**
1)TANAKA Hiroyuki
2)HAYASHI Kunio
3)OGAWA Toshio
4)GOTO Koichi
5)NAKANO Kazuaki

(57) Abstract :
This steel sheet contains in mass% from 0.020% to 0.080% (inclusive) of C from 0.01% to 0.10% (inclusive) of Si from 0.80% to 1.80% (inclusive) of Mn and more than 0.10% but less than 0.40% of Al and additionally contains from 0.005% to 0.095% (inclusive) of Nb and from 0.005% to 0.095% (inclusive) of Ti so that the total of Nb and Ti is from 0.030% to 0.100% (inclusive). The metal structure of this steel sheet is composed of ferrite bainite and other phases; the area ratio of the ferrite is from 80% to 95%; and the area ratio of the bainite is from 5% to 20%. The total of the fractions of the other phases is less than 3%. This steel sheet has a tensile strength of 590 MPa or more and a fatigue strength ratio of 0.45 or more said fatigue strength ratio being the fatigue strength relative to the tensile strength.

No. of Pages : 45 No. of Claims : 8

(12) PATENT APPLICATION PUBLICATION
(21) Application No.6758/DELNP/2014 A
(19) INDIA
(22) Date of filing of Application :12/08/2014
(43) Publication Date : 22/05/2015

(54) Title of the invention : LINEAR SEAL OF AN INTER BLADE PLATFORM AND ASSOCIATED INTER BLADE PLATFORM ROTOR AND TURBOJET ENGINE

(51) International classification :F01D11/00
(31) Priority Document No :1251611
(32) Priority Date :22/02/2012
(33) Name of priority country :France
(86) International Application No :PCT/FR2013/050310
Filing Date :15/02/2013
(87) International Publication No :WO 2013/124570
(61) Patent of Addition to Application Number :NA
Filing Date :NA
(62) Divisional to Application Number :NA
Filing Date :NA

(71)**Name of Applicant :**
1)SNECMA
Address of Applicant :2 Boulevard du Gnral Martial Valin F 75015 Paris France
(72)**Name of Inventor :**
1)RAVIER Anne Laure

(57) Abstract :
A linear seal (10; 10) of an inter blade platform having a length comprising a linear base (12; 12) intended to be secured to the inter blade platform (40) and a linear lip (14; 14) extending from the linear base (12; 12) said linear lip (14; 14) having a linear distal end portion (14a) configured to come into contact with a wall on the lower surface side (52a) or a wall on the upper surface side (52d) of a blade (50) a linear groove (16; 16) being formed between the linear base (12; 12) and the linear lip (14; 14) along at least one portion of the length of said linear seal (10; 10). The linear distal end portion (14a; 14 a) has at least one linear slot (120; 120) extending along at least one portion of the length of said seal (10; 10).

No. of Pages : 19 No. of Claims : 10

(12) PATENT APPLICATION PUBLICATION
(19) INDIA
(22) Date of filing of Application :12/08/2014
(21) Application No.6759/DELNP/2014 A
(43) Publication Date : 22/05/2015

(54) Title of the invention : HIGH TENACITY HIGH MODULUS UHMWPE FIBER AND THE PROCESS OF MAKING

(51) International classification :D02G3/02,D01F6/04,D01D5/06
(31) Priority Document No :61/602963
(32) Priority Date :24/02/2012
(33) Name of priority country :U.S.A.
(86) International Application No:PCT/US2013/026124
Filing Date :14/02/2013
(87) International Publication No :WO 2013/126268
(61) Patent of Addition to Application Number :NA
Filing Date :NA
(62) Divisional to Application Number :NA
Filing Date :NA

(71)**Name of Applicant :**
1)HONEYWELL INTERNATIONAL INC.
Address of Applicant :Patent Services M/S AB/2B 101 Columbia Road P. O. Box 2245 Morristown NJ 07962 2245 U.S.A.
(72)**Name of Inventor :**
1)TAM Thomas
2)YOUNG John Armstrong
3)KLEIN Ralf
4)TALLENT Mark
5)ARDIFF Henry Gerard

(57) Abstract :
Processes for preparing ultra high molecular weight polyethylene (UHMW PE) filaments and multi filament yarns and the yarns and articles produced therefrom. Each process produces UHMW PE yarns having tenacities of 45 g/denier to 60 g/denier or more at commercially viable throughput rates.

No. of Pages : 57 No. of Claims : 10

(12) PATENT APPLICATION PUBLICATION
(21) Application No.8555/DELNP/2014 A
(19) INDIA
(22) Date of filing of Application :14/10/2014
(43) Publication Date : 22/05/2015

(54) Title of the invention : METHOD OF PRODUCING REBAUDIOSIDE D SWEETENED DIET CARBONATED SOFT DRINKS

(51) International classification :A23L2/38,A23L2/54,A23L2/60
(31) Priority Document No :61/624439
(32) Priority Date :16/04/2012
(33) Name of priority country :U.S.A.
(86) International Application No :PCT/US2013/035555
Filing Date :08/04/2013
(87) International Publication No :WO 2013/158390
(61) Patent of Addition to Application Number :NA
Filing Date :NA
(62) Divisional to Application Number :NA
Filing Date :NA

(71)**Name of Applicant :**
1)PEPSICO INC.
Address of Applicant :700 Anderson Hill Road Purchase NY 10577 U.S.A.
(72)**Name of Inventor :**
1)LEE Thomas

(57) Abstract :
A method of producing a diet carbonated soft drink comprising combining water and a sweetening amount of Rebaudioside D (Reb D) to produce Reb D sweetened water; injecting carbon dioxide into the Reb D sweetened water to produce carbonated Reb D sweetened water; combining the carbonated Reb D sweetened water with unsweetened syrup to form the diet carbonated soft drink. Alternatively the method comprises combining water and a sweetening amount of Rebaudioside D (Reb D) to produce Reb D sweetened water; combining the Reb D sweetened water with syrup; injecting carbon dioxide into the combined Reb D sweetened water and syrup to produce the diet carbonated soft drink.

No. of Pages : 15 No. of Claims : 18

(12) PATENT APPLICATION PUBLICATION
(19) INDIA
(22) Date of filing of Application :14/10/2014
(21) Application No.8556/DELNP/2014 A
(43) Publication Date : 22/05/2015

(54) Title of the invention : CONTAINER AND SYSTEM FOR SAMPLE COLLECTION AND PREPARATION

(51) International classification :B01L3/00
(31) Priority Document No :61/616243
(32) Priority Date :27/03/2012
(33) Name of priority country :U.S.A.
(86) International Application No :PCT/US2013/034168
Filing Date :27/03/2013
(87) International Publication No :WO 2013/148881
(61) Patent of Addition to Application Number :NA
Filing Date :NA
(62) Divisional to Application Number :NA
Filing Date :NA

(71)**Name of Applicant :**
1)NORTHWESTERN UNIVERSITY
Address of Applicant :633 Clark Street Evanston IL 60208 U.S.A.
(72)**Name of Inventor :**
1)FISHER Mark James
2)McFALL Sally M.
3)HILLMAN Robert D. Jr.
4)WALKER Zachary J.
5)GROVES Jacqueline Rene
6)REED Jennifer
7)KELSO David M.

(57) Abstract :
The present invention relates to a system for collecting and preparing a body fluid sample the system comprising a sample container (10) comprising a sample cup (38) for receiving the sample said sample cup comprising graduated indicator markings (14) corresponding to equal increments of sample volume a removable lid (16) for sealably covering said sample cup said lid having an access point which is sealed by a septum and a removable cap (22) which is effective to cover said access point anda delivery device for containing a plurality of predetermined reagent doses which are to be added to a sample within the sample container in the predetermined doses relative to the volume of the sample.

No. of Pages : 28 No. of Claims : 44

(12) PATENT APPLICATION PUBLICATION
(19) INDIA
(22) Date of filing of Application :06/08/2014
(21) Application No.6625/DELNP/2014 A
(43) Publication Date : 22/05/2015

(54) Title of the invention : PROCESS AND DEVICE FOR FIXED BED PRESSURE GASIFICATION OF SOLID FUELS

(51) International classification :C10J3/42
(31) Priority Document No :10 2012 202 127.2
(32) Priority Date :13/02/2012
(33) Name of priority country :Germany
(86) International Application No :PCT/EP2013/052910
Filing Date :13/02/2013
(87) International Publication No :WO 2013/120917
(61) Patent of Addition to Application Number :NA
Filing Date :NA
(62) Divisional to Application Number :NA
Filing Date :NA

(71)**Name of Applicant :**
1)LAIR LIQUIDE SOCIETE ANONYME POUR LETUDE ET LEXPLOITATION DES PROCEDES GEORGES CLAUDE SA
Address of Applicant :75 Quai dOrsay F 75007 Paris France
(72)**Name of Inventor :**
1)MEYER Bernd
2)GR„BNER Martin

(57) Abstract :
The invention relates to a process and a device for fixed bed pressure gasification of solid fuels having an increased performance and also a widened usage spectrum of solid fuels. For this purpose the process is conducted in such a manner that using a fixed bed pressure gasifier with a feed of the coarse grain solid fuels and with a gas take off both at the top of the fixed bed pressure gasifier with a rotary grid and with ash discharge at the bottom of the fixed bed pressure gasifier with an adjustable feed for first gasification agent for a non slagging gasification using the rotary grid of the fixed bed pressure gasifier wherein critical minimum values for the steam oxygen ratio can be set having a heap of the fixed bed above the rotary grid in addition to the first gasification agents fed using the rotary grid second gasification agents for a slagging gasification are injected via at least one gasification agent nozzle extending into the upper region of the fixed bed heap.

No. of Pages : 24 No. of Claims : 11

(12) PATENT APPLICATION PUBLICATION
(19) INDIA
(22) Date of filing of Application :14/08/2014
(21) Application No.6883/DELNP/2014 A
(43) Publication Date : 22/05/2015

(54) Title of the invention : HIGH PRESSURE PUMP

(51) International classification :F04B1/04
(31) Priority Document No :10 2012 208 189.5
(32) Priority Date :16/05/2012
(33) Name of priority country :Germany
(86) International Application No :PCT/EP2013/056859
Filing Date :02/04/2013
(87) International Publication No :WO 2013/170997
(61) Patent of Addition to Application Number :NA
Filing Date :NA
(62) Divisional to Application Number :NA
Filing Date :NA

(71)**Name of Applicant :**
1)ROBERT BOSCH GMBH
Address of Applicant :Postfach 30 02 20 70442 Stuttgart Germany
(72)**Name of Inventor :**
1)AMBROCK Sascha

(57) Abstract :
The invention relates to a high pressure pump (1) for conveying a fluid particularly fuel such as diesel and comprising: a drive shaft (2) that has at least one cam (3); at least one piston (5); and at least one cylinder (6) for mounting said at least one piston (5) the at least one piston (5) being indirectly supported by means of at least one running roller (10) on the drive shaft (2) that has the at least one cam (3) such that a translational movement can be carried out by the at least one piston (5) based on a rotational movement of the drive shaft (2) and said at least one drive shaft (2) with the at least one cam (3) being in the form of a hollow shaft (2) comprising at least one cavity so as to reduce the mass of the at least one drive shaft (2).

No. of Pages : 18 No. of Claims : 10

(12) PATENT APPLICATION PUBLICATION
(19) INDIA
(22) Date of filing of Application :15/08/2014
(21) Application No.6884/DELNP/2014 A
(43) Publication Date : 22/05/2015

(54) Title of the invention : OPENING/CLOSING DEVICE

(51) International classification :G03B17/02,G03B17/04,H04M1/02
(31) Priority Document No :2012237172
(32) Priority Date :26/10/2012
(33) Name of priority country :Japan
(86) International Application No :PCT/JP2013/077350
Filing Date :08/10/2013
(87) International Publication No :WO 2014/065113
(61) Patent of Addition to Application Number :NA
Filing Date :NA
(62) Divisional to Application Number :NA
Filing Date :NA

(71)**Name of Applicant :**
1)MITSUBISHI STEEL MFG. CO. LTD.
Address of Applicant :2 22 Harumi 3 chome Chuo ku Tokyo 1048550 Japan
(72)**Name of Inventor :**
1)MITSUI Yasuhiro

(57) Abstract :
The opening/closing device of the present invention has: a base plate for rotating between a closed position and an open position the base plate being pivotably supported by the stand so as to be able to rotate; a slide plate for sliding between a first position and a second position provided so as to be able to slide on the base plate; an urging means for urging the slide plate in the direction of the second position the urging means protruding from the base plate; a movement restricting mechanism configured from a first member provided to one of either the stand or the slide plate and a second member provided to the other of either the stand or the slide plate the movement restricting mechanism restricting movement of the base plate and the slide plate by engagement of the first member and the second member when the base plate is in the closed position; and a movement urging mechanism for urging movement of the slide plate toward the first position from the second position in conjunction with movement of the base plate from the open position to the closed position.

No. of Pages : 43 No. of Claims : 7

(12) PATENT APPLICATION PUBLICATION
(21) Application No.8560/DELNP/2014 A
(19) INDIA
(22) Date of filing of Application :14/10/2014
(43) Publication Date : 22/05/2015

(54) Title of the invention : SYSTEM FOR WIRELESS DISTRIBUTION OF POWER

(51) International classification :H02J17/00,H01F27/00
(31) Priority Document No :2012900054
(32) Priority Date :06/01/2012
(33) Name of priority country :Australia
(86) International Application No :PCT/AU2013/000002
Filing Date :03/01/2013
(87) International Publication No :WO 2013/102241
(61) Patent of Addition to Application Number :NA
Filing Date :NA
(62) Divisional to Application Number :NA
Filing Date :NA

(71)**Name of Applicant :**
1)HOWARD Keith Maxwell
Address of Applicant :20 Paterson St Norah Head NSW 2263 Australia
(72)**Name of Inventor :**
1)HOWARD Keith Maxwell

(57) Abstract :
A wireless power transmission system comprising a transmitting inverted Tesla Coil or Magnifier connected to the ground by its high voltage terminal using a capacitive earth connection and transmitting power through the ground to a subsequent receiving Tesla Coil or Magnifier being well earthed through a capacitive earth connection or conventional earth with the distance between the two earth connections of the transmitter and receiver plus the length of the coils in the transmitter and receiver forming a tuned length and the system thus composed being operated at a frequency that is an harmonic or close to an harmonic of the tuned length thus established.

No. of Pages : 36 No. of Claims : 68

(12) PATENT APPLICATION PUBLICATION
(19) INDIA
(22) Date of filing of Application :13/08/2014
(21) Application No.6822/DELNP/2014 A
(43) Publication Date : 22/05/2015

(54) Title of the invention : SAMPLE TESTING DEVICE

(51) International classification	:G01N33/53,G01N33/543,G01N33/553
(31) Priority Document No	:2012192587
(32) Priority Date	:31/08/2012
(33) Name of priority country	:Japan
(86) International Application No	:PCT/JP2013/073448
Filing Date	:30/08/2013
(87) International Publication No	:WO 2014/034908
(61) Patent of Addition to Application Number	:NA
Filing Date	:NA
(62) Divisional to Application Number	:NA
Filing Date	:NA

(71)**Name of Applicant :**
1)KABUSHIKI KAISHA TOSHIBA
Address of Applicant :1 1 Shibaura 1 chome Minato ku Tokyo 1058001 Japan
2)TOSHIBA MEDICAL SYSTEMS CORPORATION
(72)**Name of Inventor :**
1)UCHIKAWA Asuka
2)KANAYAMA Shoichi
3)IKEDA Naru

(57) Abstract :
The purpose of the present invention is to obtain highly accurate testing results in a sample testing device in which molecules to be detected are quantified by optically measuring the turbidity or absorbance of a test solution originating from magnetic particles. Magnets (41) apply a magnetic field to a test solution comprising a sample and magnetic particles accommodated in a test container (31). A photometric mechanism has a light source (210) and a detector (220). The light source (210) irradiates the test solution with light. The detector (220) is provided to a position opposing the light source (210) with the test container (31) interposed therebetween and detects light coming from the test solution. The magnets (41) have a geometric arrangement such that there is substantially uniform magnetic flux density of the magnetic field in the test solution inside the test container (31).

No. of Pages : 113 No. of Claims : 17

(12) PATENT APPLICATION PUBLICATION
(21) Application No.6823/DELNP/2014 A
(19) INDIA
(22) Date of filing of Application :13/08/2014
(43) Publication Date : 22/05/2015

(54) Title of the invention : CONNECTION STRUCTURE FOR ANTENNA APPARATUS AND WIRELESS COMMUNICATIONS APPARATUS

(51) International classification :H01P1/04
(31) Priority Document No :2012035118
(32) Priority Date :21/02/2012
(33) Name of priority country :Japan
(86) International Application No :PCT/JP2013/050988
Filing Date :18/01/2013
(87) International Publication No :WO 2013/125272
(61) Patent of Addition to Application Number :NA
Filing Date :NA
(62) Divisional to Application Number :NA
Filing Date :NA

(71)**Name of Applicant :**
1)NEC CORPORATION
Address of Applicant :7 1 Shiba 5 chome Minato ku Tokyo 1088001 Japan
(72)**Name of Inventor :**
1)SHIMIZU Masatoshi
2)ORIHASHI Naoyuki

(57) Abstract :
An antenna (2) and a wireless communications apparatus (1) includes: mount portions (9 15); flat proximate opposing surfaces (13 20); and waveguide portions (12 19) penetrating the proximate opposing surfaces (13 20). For example in the proximate opposing surface (13) of the wireless communications apparatus (1) a choke groove (14) is formed outside the waveguide portion (12). With the mount portions (9 15) of the antenna (2) and the wireless communications apparatus (1) abutted and fixed to each other the proximate opposing surfaces (13 20) are directly opposed parallel to each other with a gap and the waveguide portions (12 19) are opposed to each other across the gap forming a waveguide.

No. of Pages : 19 No. of Claims : 11

(12) PATENT APPLICATION PUBLICATION
(19) INDIA
(22) Date of filing of Application :13/08/2014
(21) Application No.6826/DELNP/2014 A
(43) Publication Date : 22/05/2015

(54) Title of the invention : PRODUCTION METHOD FOR CYCLOPENTANONE DERIVATIVE INTERMEDIATE COMPOUND AND PRODUCTION METHOD FOR INTERMEDIATE COMPOUND

(51) International classification	:C07D319/08,C07C45/65,C07C45/75
(31) Priority Document No	:2012007522
(32) Priority Date	:17/01/2012
(33) Name of priority country	:Japan
(86) International Application No	:PCT/JP2012/081903
Filing Date	:10/12/2012
(87) International Publication No	:WO 2013/108514
(61) Patent of Addition to Application Number	:NA
Filing Date	:NA
(62) Divisional to Application Number	:NA
Filing Date	:NA

(71)**Name of Applicant :**
1)KUREHA CORPORATION
Address of Applicant :3 3 2 Nihonbashi Hamacho Chuo ku Tokyo 1038552 Japan
(72)**Name of Inventor :**
1)KANNO Hisashi
2)KIKUMOTO Shigeyuki

(57) Abstract :
A production method for a compound indicated by general formula (V) including a step in which a compound indicated by general formula (II) is obtained by reacting a compound indicated by general formula (I) with an acid. (G and G each indicate a protecting group that dissociates under acidic conditions.)

No. of Pages : 39 No. of Claims : 18

(12) PATENT APPLICATION PUBLICATION
(19) INDIA
(22) Date of filing of Application :14/10/2014
(21) Application No.8567/DELNP/2014 A
(43) Publication Date : 22/05/2015

(54) Title of the invention : METHOD FOR FUSION DRAWING ION EXCHANGEABLE GLASS

(51) International classification :C03B17/06,C03B18/04,C03B18/18
(31) Priority Document No :13/431374
(32) Priority Date :27/03/2012
(33) Name of priority country :U.S.A.
(86) International Application No :PCT/US2013/033858
Filing Date :26/03/2013
(87) International Publication No :WO 2013/148667
(61) Patent of Addition to Application Number :NA
Filing Date :NA
(62) Divisional to Application Number :NA
Filing Date :NA

(71)**Name of Applicant :**
1)CORNING INCORPORATED
Address of Applicant :1 Riverfront Plaza Corning New York 14831 U.S.A.
(72)**Name of Inventor :**
1)ALLAN Douglas Clippinger
2)BOWDEN Bradley Frederick
3)GUO Xiaoju
4)MAURO John Christopher
5)POTUZAK Marcel

(57) Abstract :
A method of making glass through a glass ribbon forming process in which a glass ribbon is drawn from a root point to an exit point is provided. The method comprises the steps of: (I) cooling the glass ribbon at a first cooling rate from an initial temperature to a process start temperature the initial temperature corresponding to a temperature at the root point; (II) cooling the glass ribbon at a second cooling rate from the process start temperature to a process end temperature; and (III) cooling the glass ribbon at a third cooling rate from the process end temperature to an exit temperature the exit temperature corresponding to a temperature at the exit point wherein an average of the second cooling rate is lower than an average of the first cooling rate and an average of the third cooling rate.

No. of Pages : 33 No. of Claims : 18

(12) PATENT APPLICATION PUBLICATION
(19) INDIA
(22) Date of filing of Application :14/10/2014
(21) Application No.8569/DELNP/2014 A
(43) Publication Date : 22/05/2015

(54) Title of the invention : LIQUID OR PARTICULATE TANK MIX ADJUVANT COMPRISING A BASE SELECTED FROM A MIXTURE OF CARBONATE AND HYDROGENCARBONATE

(51) International classification :A01P13/00,A01N59/26,A01N59/00
(31) Priority Document No :61/613505
(32) Priority Date :21/03/2012
(33) Name of priority country :U.S.A.
(86) International Application No :PCT/EP2013/055606
Filing Date :19/03/2013
(87) International Publication No :WO 2013/139752
(61) Patent of Addition to Application Number :NA
Filing Date :NA
(62) Divisional to Application Number :NA
Filing Date :NA

(71)**Name of Applicant :**
1)BASF SE
Address of Applicant :67056 Ludwigshafen Germany
(72)**Name of Inventor :**
1)SCHNABEL Gerhard
2)NOLTE Marc
3)GENARI Gerhard
4)KLINGELHOEFER Paul
5)ETCHEVERRY Mariano Ignacio
6)BOWE Steven
7)FRIHAUF John
8)BROMMER Chad
9)CANNAN Terrance M.
10)THOMAS Walter
11)STAAL Maarten

(57) Abstract :
The present invention relates to q method for preparing a tank mix which comprises the step of contacting a pesticide formulation water and a tank mix adjuvant wherein the tank mix adjuvant comprises a base which contains a mixture of an alkali salt of carbonate and an alkali salt of hydrogencarbonate and wherein the tank mix adjuvant is present in form of an aqueous liquid which contains at least 50 g/l of the base or in form of a particulate solid which contains at least 10 wt% of the base. The invention also relates to a use of a tank mix adjuvant for increasing the efficacy of a pesticide wherein the tank mix adjuvant comprises a base which contains a mixture of an alkali salt of carbonate and an alkali salt of hydrogencarbonate and wherein the tank mix adjuvant is present in form of an aqueous liquid which contains at least 50 g/l of the base or in form of a particulate solid which contains at least 10 wt% of the base; to a tank mix adjuvant which comprises an auxiliary and a base which contains a mixture of an alkali salt of carbonate and an alkali salt of hydrogencarbonate wherein the tank mix adjuvant is present in form of an aqueous liquid which contains at least 50 g/l of the base; to a tank mix adjuvant which comprises an auxiliary and a base which contains a mixture of an alkali salt of carbonate and an alkali salt of hydrogencarbonate wherein the tank mix adjuvant is present in form in form of a particulate solid which contains at least 10 wt% of the base; and to a method of controlling phytopathogenic fungi and/or undesired vegetation and/or undesired insect or mite attack and/or for regulating the growth of plants wherein the tank mix is allowed to act on the respective pests their environment or the plants to be protected from the respective pest on the soil and/or on undesired plants and/or the crop plants and/or their environment.

No. of Pages : 30 No. of Claims : 16

(12) PATENT APPLICATION PUBLICATION
(19) INDIA
(22) Date of filing of Application :14/08/2014
(21) Application No.6853/DELNP/2014 A
(43) Publication Date : 22/05/2015

(54) Title of the invention : SELF PRESERVED OIL DISPERSIONS COMPRISING BORIC

(51) International classification :A61K9/107,A61K33/22,A61K47/10
(31) Priority Document No :12156652.5
(32) Priority Date :23/02/2012
(33) Name of priority country :EPO
(86) International Application No :PCT/EP2013/053556
Filing Date :22/02/2013
(87) International Publication No :WO 2013/124415
(61) Patent of Addition to Application Number :NA
Filing Date :NA
(62) Divisional to Application Number :NA
Filing Date :NA

(71)**Name of Applicant :**
1)SANTEN SAS
Address of Applicant :1 rue Pierre Fontaine Btiment Genavenir IV F 91000 Evry France
(72)**Name of Inventor :**
1)GARRIGUE Jean Sbastien
2)LALLEMAND Frdric
3)PHILIPS Betty

(57) Abstract :
The present invention relates to a self preserved oil dispersion. Especially the present invention relates to a self preserved oil dispersion including a dispersed oil phase an aqueous phase and at least one surfactant wherein said oil dispersion comprises boric acid in an amount ranging from 0.005% to 0.075% in weight of the total weight of the oil dispersion said amount of boric acid being a preservative effective amount so that the oil dispersion has a preservative activity.

No. of Pages : 32 No. of Claims : 16

(12) PATENT APPLICATION PUBLICATION
(19) INDIA
(22) Date of filing of Application :14/08/2014
(21) Application No.6854/DELNP/2014 A
(43) Publication Date : 22/05/2015

(54) Title of the invention : FLEXIBLE EFFICIENT SOLAR CELL PANEL

(51) International classification :H01L31/042
(31) Priority Document No :201220043335.8
(32) Priority Date :10/02/2012
(33) Name of priority country :China
(86) International Application No :PCT/CN2012/080137
Filing Date :15/08/2012
(87) International Publication No :WO 2013/117084
(61) Patent of Addition to Application Number :NA
Filing Date :NA
(62) Divisional to Application Number :NA
Filing Date :NA

(71)**Name of Applicant :**
1)SHENZHEN SACRED SOLAR TECHNOLOGY CO. LTD
Address of Applicant :The 3rd floor C Building Longda Industrial Zone No.62 of Huating Road Langkou of Dalang Community Baoan Shenzhen Guangdong 518000 China
(72)**Name of Inventor :**
1)WEI Haigui
2)HUANG Dongli

(57) Abstract :
Provided is a flexible efficient solar cell panel, comprising a flexible substrate (5), a solar assembly (3) and a transparent protective layer (1); the flexible substrate (5) can bend in an arc-shape and is used to bear the solar assembly (3); the platy solar assembly (3) is formed by serially connecting a plurality of solar cell slices bendable in an arc-shape, and the solar assembly (3) is fixed on the substrate (5); the transparent protective layer fixedly covers the surface of the solar assembly (3) and is used to protect the solar assembly (3). The flexible solar cell panel can bend in an arc-shape with a maximum angle of 60 degrees, and because of the flexibility, can be used on the roof of vehicles such as electric golf cars, patrol cars, sightseeing cars and the like, and can also be used in the fields of yachts, arc-shaped roofs, backpack tents and the like.

No. of Pages : 10 No. of Claims : 6

(12) PATENT APPLICATION PUBLICATION
(19) INDIA
(22) Date of filing of Application :14/08/2014
(21) Application No.6855/DELNP/2014 A
(43) Publication Date : 22/05/2015

(54) Title of the invention : METHOD FOR PRODUCING A CELLULOSE SUSPENSION

(51) International classification :D01D1/02,C08B1/00,C08J3/11
(31) Priority Document No :A 279/2012
(32) Priority Date :05/03/2012
(33) Name of priority country :Austria
(86) International Application No :PCT/AT2013/000027
Filing Date :15/02/2013
(87) International Publication No :WO 2013/131113
(61) Patent of Addition to Application Number :NA
Filing Date :NA
(62) Divisional to Application Number :NA
Filing Date :NA

(71)**Name of Applicant :**
1)LENZING AG
Address of Applicant :Werkstrae 2 A 4860 Lenzing Austria
(72)**Name of Inventor :**
1)M–DERL Ulrich
2)SCHREMPF Christoph
3)FIRGO Heinrich

(57) Abstract :
The present invention relates to the production of a cellulose suspension particularly a premixture for producing a cellulose solution in organic solutions such as aqueous N methyl morpholine N oxide (NMMO) solution.

No. of Pages : 23 No. of Claims : 16

(12) PATENT APPLICATION PUBLICATION
(19) INDIA
(22) Date of filing of Application :25/01/2012
(21) Application No.761/DELNP/2012 A
(43) Publication Date : 22/05/2015

(54) Title of the invention : CAPSULE SYSTEM FOR THE PREPARATION OF BEVERAGES BY CENTRIFUGATION

(51) International classification :A47J 31/22
(31) Priority Document No :09168885.3
(32) Priority Date :28/08/2009
(33) Name of priority country :EPO
(86) International Application No :PCT/EP2010/062366
Filing Date :25/08/2010
(87) International Publication No :WO 2011/023711
(61) Patent of Addition to Application Number :NA
Filing Date :NA
(62) Divisional to Application Number :NA
Filing Date :NA

(71)**Name of Applicant :**
1)NESTEC S.A.
Address of Applicant :AVENUE NESTLE 55, CH-1800 VEVEY, SWITZERLAND
(72)**Name of Inventor :**
1)YOAKIM, ALFRED
2)DENISART, JEAN-PAUL
3)RYSER, ANTOINE
4)PERENTES, ALEXANDRE

(57) Abstract :
A capsule system for preparing beverages by centrifugation of a capsule in a centrifuging brewing device comprising: a set of different capsules (1A, 1B; 1C, 1D; 1E, 1F, 1G; 1H, 1I; 1J,1K, 1L); each one for selectively delivering a beverage having specific characteristics that differ from the other capsules of the set; each capsule of the set comprising a body (2) with a sidewall and a free rim (3), an upper wall (4) and an extractable or infusible ingredient; and an insertion diameter (D) of the body of the capsule for insertion in a rotary capsule holder (14) of the centrifuge brewing device (7) in a referential position, wherein the different capsules in the set having bodies (2) of different storage volumes obtained by a variable depth (d1, d2, d3) of the body in the set but the same insertion diameter (D) for all capsules of the set.

No. of Pages : 29 No. of Claims : 18

(12) PATENT APPLICATION PUBLICATION
(19) INDIA
(22) Date of filing of Application :14/10/2014
(21) Application No.8580/DELNP/2014 A
(43) Publication Date : 22/05/2015

(54) Title of the invention : ASSIGNING AN ORDER FROM A CLIENT TO A CONTRACTOR

(51) International classification :G05B19/409
(31) Priority Document No :10 2012 208 135.6
(32) Priority Date :15/05/2012
(33) Name of priority country :Germany
(86) International Application No :PCT/EP2013/059793
Filing Date :13/05/2013
(87) International Publication No :WO 2013/171149
(61) Patent of Addition to Application Number :NA
Filing Date :NA
(62) Divisional to Application Number :NA
Filing Date :NA

(71)**Name of Applicant :**
1)SIEMENS AKTIENGESELLSCHAFT
Address of Applicant :Wittelsbacherplatz 2 80333 M¼nchen Germany
(72)**Name of Inventor :**
1)LEHOFER Martin

(57) Abstract :
The invention relates to a method for assigning an order from a client to a contractor in which a clear identification code (6,7) is respectively assigned to the client and to the contractor the client and the contractor each having a mobile operating device (1a,1b) provided with an interface with a wireless packet oriented network (2) and an interface for near field communication (3). The aim of the invention is to provide a method for assigning an order in which the assignment of the order from a client to a contractor is carried out quickly in a detailed manner and with direct interaction between the client and the contractor. Said aim is achieved by the following steps: emitting the order identification code (5,6) via the interface for the near field communication (3) of the operating device of the client (1a); receiving the order identification code (5,6) via the interface for the near field communication (3) of the operating device of the contractor (1b); emitting the contractor (5,7) identification code via the interface for the near field communication (3) of the operating device of the contractor (1b); receiving the contractor (5,7) identification code via the interface for the near field communication (3) of the operating device of the client (1b); assigning the order to the contractor.

No. of Pages : 20 No. of Claims : 12

(12) PATENT APPLICATION PUBLICATION
(21) Application No.6747/DELNP/2014 A
(19) INDIA
(22) Date of filing of Application :12/08/2014
(43) Publication Date : 22/05/2015

(54) Title of the invention : PROJECTOR AND METHOD OF CONTROLLING PROJECTOR

(51) International classification :G03B21/00,G03B21/14
(31) Priority Document No :2012031447
(32) Priority Date :16/02/2012
(33) Name of priority country :Japan
(86) International Application No :PCT/JP2013/000446
Filing Date :29/01/2013
(87) International Publication No :WO 2013/121712
(61) Patent of Addition to Application Number :NA
Filing Date :NA
(62) Divisional to Application Number :NA
Filing Date :NA

(71)**Name of Applicant :**
1)SEIKO EPSON CORPORATION
Address of Applicant :4 1 Nishi shinjuku 2 chome Shinjuku ku Tokyo 1630811 Japan
(72)**Name of Inventor :**
1)FURUI Shiki

(57) Abstract :
A projector (100) including a projection section (101) adapted to project an image on a screen (SC) a CPU (120) adapted to make the projection section project a correction pattern (177a) so as to be superimposed on the image presently projected if a start condition of the distortion correction process is satisfied and a correction control section (122) and a keystone distortion correction section (132) adapted to perform the distortion correction process based on a state of the correction pattern and the CPU makes the projection section project the correction pattern in a state in which a result of the distortion correction process fails to be reflected during a period from when the start condition of the distortion correction process is satisfied to when a condition for completing the distortion correction process is satisfied and a period in which the keystone distortion correction section performs the distortion correction process a plurality of times.

No. of Pages : 55 No. of Claims : 7

(12) PATENT APPLICATION PUBLICATION
(19) INDIA
(22) Date of filing of Application :12/08/2014
(21) Application No.6748/DELNP/2014 A
(43) Publication Date : 22/05/2015

(54) Title of the invention : HIGH THERMAL CONDUCTIVITY CO INJECTION MOLDING SYSTEM

(51) International classification :B29C45/60,B29C45/16
(31) Priority Document No :61/602650
(32) Priority Date :24/02/2012
(33) Name of priority country :U.S.A.
(86) International Application No :PCT/US2013/027279
Filing Date :22/02/2013
(87) International Publication No :WO 2013/126667
(61) Patent of Addition to Application Number :NA
Filing Date :NA
(62) Divisional to Application Number :NA
Filing Date :NA

(71)**Name of Applicant :**
1)THE PROCTER & GAMBLE COMPANY
Address of Applicant :One Procter & Gamble Plaza Cincinnati OH 45202 U.S.A.
(72)**Name of Inventor :**
1)BERG Charles John Jr.
2)ALTONEN Gene Michael
3)NEUFARTH Ralph Edwin
4)BOSWELL Emily Charlotte
5)LAYMAN John Moncrief

(57) Abstract :
A low constant pressure co injection molding machine forms molded parts by injecting molten thermoplastic material into a mold cavity at low constant pressures of 6 000 psi and lower. As a result the low constant pressure injection molding machine includes a mold formed of easily machineable material that is less costly and faster to manufacture than typical injection molds. Co injection of thin walled parts having an L/T ratio >100 with embedded sustainable materials such as polylactic acid (PLA) starch post consumer recyclables (PCR) and post industrial recyclables (PIR) isolated from surfaces by barrier layers of leach resistant material having a thickness less than 0.5mm is possible. The co injection molding machine is provided with a screw comprising a material having an average thermal conductivity of more than 30 BTU/HR FT °F.

No. of Pages : 43 No. of Claims : 14

(12) PATENT APPLICATION PUBLICATION
(19) INDIA
(22) Date of filing of Application :12/08/2014
(21) Application No.6749/DELNP/2014 A
(43) Publication Date : 22/05/2015

(54) Title of the invention : GLASS SHEET

(51) International classification :C03C4/00,C03C21/00,C03C3/085
(31) Priority Document No :1252320
(32) Priority Date :15/03/2012
(33) Name of priority country :France
(86) International Application No :PCT/FR2013/050523
Filing Date :13/03/2013
(87) International Publication No :WO 2013/136013
(61) Patent of Addition to Application Number :NA
Filing Date :NA
(62) Divisional to Application Number :NA
Filing Date :NA

(71)**Name of Applicant :**
1)SAINT GOBAIN GLASS FRANCE
Address of Applicant :18 avenue dAlsace F 92400 Courbevoie France
(72)**Name of Inventor :**
1)SELLIER Julien
2)GY Ren
3)PELLETIER Stphanie

(57) Abstract :
The invention relates to a glass sheet which has a lithium aluminosilicate composition including at most 1 wt % of sodium oxide and the thickness of which is at most 2 mm and which has a surface area under compression obtained by ion exchange and a central area under tension such that the bending strength in a ring on tripod test is at least 50 MPa after Vickers indentation under a load of 120 N.

No. of Pages : 17 No. of Claims : 15

(12) PATENT APPLICATION PUBLICATION
(19) INDIA
(22) Date of filing of Application :14/10/2014
(21) Application No.8591/DELNP/2014 A
(43) Publication Date : 22/05/2015

(54) Title of the invention : LASER NOZZLE WITH MOBILE ELEMENT OF IMPROVED EXTERNAL PROFILE

(51) International classification :B23K26/14,B23K26/08
(31) Priority Document No :1253089
(32) Priority Date :04/04/2012
(33) Name of priority country :France
(86) International Application No :PCT/FR2013/050291
Filing Date :13/02/2013
(87) International Publication No :WO 2013/150195
(61) Patent of Addition to Application Number :NA
Filing Date :NA
(62) Divisional to Application Number :NA
Filing Date :NA

(71)**Name of Applicant :**
1)LAIR LIQUIDESOCIETE ANONYME POUR LETUDE ET LEXPLOITATION DES PROCEDES GEORGES CLAUDE
Address of Applicant :75 Quai dOrsay F 75007 Paris France
(72)**Name of Inventor :**
1)JOUANNEAU Thomas
2)LEFEBVRE Philippe

(57) Abstract :
The invention relates to a nozzle for laser cutting comprising a nozzle body (1) comprising an axial housing (5) and a first outlet orifice (11) situated in the region of the front face (1a) of the nozzle body (1) a mobile element (2) arranged in the axial housing (5) of the nozzle body (1) comprising a skirt forming front part (2a) and comprising a second outlet orfice (12) said mobile element (2) being able to be moved in a translational movement inside the axial housing (5) toward the first outlet orifice (11) under the effect of a gas pressure applied to the mobile element (2) until such time as the skirt forming front part (2a) of the mobile element (2) projects out from the axial housing (5) through the first outlet orifice (11) and an elastic element (8) arranged in the axial housing (5) between the nozzle body (1) and the mobile element (2) applying an elastic return force to the mobile element (2). According to the invention the front part (2a) comprises an end portion (17) the outside diameter of which decreases progressively toward the second outlet orifice (12). Focusing head and associated laser cutting installation. Laser beam cutting method employing a nozzle according to the invention a laser focusing head according to the invention or an installation according to the invention.

No. of Pages : 23 No. of Claims : 14

(12) PATENT APPLICATION PUBLICATION
(19) INDIA
(22) Date of filing of Application :12/08/2014
(21) Application No.6764/DELNP/2014 A
(43) Publication Date : 22/05/2015

(54) Title of the invention : COMPOSITE WELDING METHOD AND WELDING TORCH FOR COMPOSITE WELDING

(51) International classification :B23K9/16,B23K9/167,B23K9/173
(31) Priority Document No :2012025030
(32) Priority Date :08/02/2012
(33) Name of priority country :Japan
(86) International Application No :PCT/JP2013/053048
Filing Date :08/02/2013
(87) International Publication No :WO 2013/118865
(61) Patent of Addition to Application Number :NA
Filing Date :NA
(62) Divisional to Application Number :NA
Filing Date :NA

(71)**Name of Applicant :**
1)TAIYO NIPPON SANSO CORPORATION
Address of Applicant :3 26 Koyama 1 chome Shinagawa ku Tokyo 1428558 Japan
(72)**Name of Inventor :**
1)KANEMARU Shuhei
2)SASAKI Tomoaki
3)SATO Toyoyuki

(57) Abstract :
Provided is a composite welding method that increases arc stability and is capable of improving welding speed and work efficiency. The invention is a composite welding method that welds parent metal generating a TIG arc at the leading side relative to the welding direction and generating a MIG arc at the trailing side. The invention selects a composite welding method characterized by: setting a TIG current larger than a MIG current and continuously generating an arc at a TIG electrode and a MIG electrode; and having a distance with an absolute value (L) of no more than 20 mm said distance being the distance between the intersection point (3B) of the TIG electrode center axis (3A) and the parent metal surface and the intersection point (4B) of the MIG electrode center axis (4A) and the parent metal surface.

No. of Pages : 54 No. of Claims : 20

(12) PATENT APPLICATION PUBLICATION
(21) Application No.7/DELNP/2015 A
(19) INDIA
(22) Date of filing of Application :01/01/2015
(43) Publication Date : 22/05/2015

(54) Title of the invention : HIGH INTERRUPTING RATING MOLDED CASE CIRCUIT BREAKER

(51) International classification :H01H71/02
(31) Priority Document No :13/526154
(32) Priority Date :18/06/2012
(33) Name of priority country :U.S.A.
(86) International Application No :PCT/US2013/044719
Filing Date :07/06/2013
(87) International Publication No :WO 2013/191924
(61) Patent of Addition to Application Number :NA
Filing Date :NA
(62) Divisional to Application Number :NA
Filing Date :NA

(71)**Name of Applicant :**
1)SCHNEIDER ELECTRIC USA INC.
Address of Applicant :1415 S. Roselle Road Palatine Illinois 60067 U.S.A.
(72)**Name of Inventor :**
1)WEHR Eugene

(57) Abstract :
A circuit breaker having an increased interrupting rating without increasing the size of the circuit breaker while maintaining full compliance with UL and IEC standards. An adhesive 420 422 424 is applied to a bottom surface 411 412 414 near the exhaust outlets 410a f of interrupters. The interrupter housing is formed by joining two pieces (302 304) and the adhesive is applied across both pieces. The adhesive adheres to a bottom interior surface (402) of a base of the circuit breaker anchoring the interrupter assembly to the base. The adhesive prevents the two pieces of the interrupter housing from separating during an interruption event and prevents the interrupter assembly from being lifted away from the base during the interruption event. The adhesive can act as a barrier 426 to prevent interruption gas and pollution that do not escape out of the exhaust ports of the base from entering between the bottom of the interrupter assembly and the interior of the base.

No. of Pages : 26 No. of Claims : 20

(12) PATENT APPLICATION PUBLICATION
(19) INDIA
(22) Date of filing of Application :14/10/2014
(21) Application No.8585/DELNP/2014 A
(43) Publication Date : 22/05/2015

(54) Title of the invention : DEVICE FOR DISPENSING FLUID PRODUCT

(51) International classification :A61M15/00
(31) Priority Document No :1255011
(32) Priority Date :31/05/2012
(33) Name of priority country :France
(86) International Application No :PCT/FR2013/051217
Filing Date :30/05/2013
(87) International Publication No :WO 2013/178952
(61) Patent of Addition to Application Number :NA
Filing Date :NA
(62) Divisional to Application Number :NA
Filing Date :NA

(71)**Name of Applicant :**
1)APTAR FRANCE SAS
Address of Applicant :BP G Le Prieur F 27110 Le Neubourg France
(72)**Name of Inventor :**
1)BAILLET Matthieu
2)KIRNIAK Maxime
3)LAUT Antoine

(57) Abstract :
Device for dispensing fluid product comprising a main body (10) said device comprising at least one individual reservoir containing a single dose of fluid product such as powder opening means (80) being provided for opening an individual reservoir each time the device is actuated an upper body (101) being mounted fixedly on said main body (10) said upper body (101) receiving a mouthpiece (200) defining a distribution orifice said device comprising an inhalation triggered system (60) which comprises a deformable air chamber (61) collaborating with said inhalation mouthpiece (200) and a triggering element (600) collaborating with said air chamber (61) so that inhalation through said inhalation mouthpiece (200) causes said air chamber (61) to be deformed and said triggering element (600) to actuate said opening means (80) so that upon inhalation through the inhalation mouthpiece (200) a reservoir is opened by said opening means characterized in that said mouthpiece (200) is fixed to said upper body (101) said mouthpiece comprising a deformable peripheral lip (209) which following assembly collaborates in a fluidtight manner with a peripheral edge (108 109) of said upper body (101).

No. of Pages : 24 No. of Claims : 9

(12) PATENT APPLICATION PUBLICATION
(19) INDIA
(22) Date of filing of Application :14/10/2014
(21) Application No.8586/DELNP/2014 A
(43) Publication Date : 22/05/2015

(54) Title of the invention : DEVICE FOR DISTRIBUTING A FLUID PRODUCT

(51) International classification :A61M15/00
(31) Priority Document No :1254784
(32) Priority Date :24/05/2012
(33) Name of priority country :France
(86) International Application No :PCT/FR2013/051110
Filing Date :22/05/2013
(87) International Publication No :WO 2013/175120
(61) Patent of Addition to Application Number :NA
Filing Date :NA
(62) Divisional to Application Number :NA
Filing Date :NA

(71)**Name of Applicant :**
1)APTAR FRANCE SAS
Address of Applicant :BP G Le Prieur F 27110 Le Neubourg France
(72)**Name of Inventor :**
1)BAILLET Matthieu
2)COLOMB Arnaud

(57) Abstract :
The invention relates to a device for distributing a fluid product comprising a body (10) and at least one individual reservoir containing a single dose of fluid product such as a powder opening means (80) being provided for opening an individual reservoir each time the device is actuated the device comprising an inhalation end fitting (5) and a system (60) that is triggered by inhalation which system comprises a deformable air chamber (61) interacting with said inhalation end fitting (5) and a triggering element (600) interacting with said air chamber (61) so that during inhalation through said inhalation end fitting (5) said air chamber (61) is deformed and said triggering element (600) actuates said opening means (80) so that a reservoir is opened by said opening means said air chamber (61) comprising a deformable lateral body (611) a first open end comprising a peripheral edge (62) encircling an aperture forming the inlet of said hollow pocket and a second end forming the bottom of said hollow pocket said second end comprising connecting means (63) for connecting said air chamber to said triggering element (600) said lateral body (611) taking the form of a bellows comprising a plurality of bellows portions (611a 611b 611c etc.) advantageously six arranged axially one after the other said bellows shaped lateral body (611) comprising bellows portions having different outside diameters and/or inside holes.

No. of Pages : 26 No. of Claims : 12

(12) PATENT APPLICATION PUBLICATION
(19) INDIA
(22) Date of filing of Application :14/10/2014
(21) Application No.8561/DELNP/2014 A
(43) Publication Date : 22/05/2015

(54) Title of the invention : DIFFERENTIATION OF HUMAN EMBRYONIC STEM CELLS INTO PANCREATIC ENDODERM

(51) International classification :C12N5/0735,C12N5/02
(31) Priority Document No :61/643684
(32) Priority Date :07/05/2012
(33) Name of priority country :U.S.A.
(86) International Application No :PCT/US2013/039940
Filing Date :07/05/2013
(87) International Publication No :WO 2013/169769
(61) Patent of Addition to Application Number :NA
Filing Date :NA
(62) Divisional to Application Number :NA
Filing Date :NA

(71)**Name of Applicant :**
1)JANSSEN BIOTECH INC.
Address of Applicant :800/850 Ridgeview Drive Horsham Pennsylvania 19044 U.S.A.
(72)**Name of Inventor :**
1)REZANIA Alireza

(57) Abstract :
The present invention provides methods to promote the differentiation of pluripotent stem cells. In particular the present invention provides methods to produce a population of pancreatic endoderm cells wherein the initial seeding density of undifferentiated epluripotent cells is defined.

No. of Pages : 43 No. of Claims : 53

(12) PATENT APPLICATION PUBLICATION
(19) INDIA
(22) Date of filing of Application :14/10/2014
(21) Application No.8562/DELNP/2014 A
(43) Publication Date : 22/05/2015

(54) Title of the invention : ORGANIC COMPOUNDS

(51) International classification :A61K31/4985
(31) Priority Document No :61/624293
(32) Priority Date :14/04/2012
(33) Name of priority country :U.S.A.
(86) International Application No :PCT/US2013/036514
Filing Date :14/04/2013
(87) International Publication No :WO 2013/155505
(61) Patent of Addition to Application Number :NA
Filing Date :NA
(62) Divisional to Application Number :NA
Filing Date :NA

(71)**Name of Applicant :**
1)INTRA CELLULAR THERAPIES INC
Address of Applicant :3960 Broadway New York New York 10032 U.S.A.
(72)**Name of Inventor :**
1)MATES Sharon
2)DAVIS Robert
3)LI Peng
4)WENNOGLE Lawrence
5)LERNER Richard A.

(57) Abstract :
The invention relates to particular substituted heterocycle fused gamma carbolines their prodrugs in free solid pharmaceutically acceptable salt and/or substantially pure form as described herein pharmaceutical compositions thereof and methods of use in the treatment of diseases involving 5 HT2A receptor serotonin transporter (SERT) and/or pathways involving dopamine D2 receptor signaling systems..

No. of Pages : 37 No. of Claims : 19

(12) PATENT APPLICATION PUBLICATION
(19) INDIA
(22) Date of filing of Application :14/10/2014
(21) Application No.8563/DELNP/2014 A
(43) Publication Date : 22/05/2015

(54) Title of the invention : EAR CLAMP

(51) International classification :F16L33/025
(31) Priority Document No :NA
(32) Priority Date :NA
(33) Name of priority country :NA
(86) International Application No :PCT/EP2013/067023
Filing Date :14/08/2013
(87) International Publication No :WO 2015/022024
(61) Patent of Addition to Application Number :NA
Filing Date :NA
(62) Divisional to Application Number :NA
Filing Date :NA

(71)**Name of Applicant :**
1)HANS OETIKER AG MASCHINEN UND APPARATEFABRIK
Address of Applicant :Oberdorfstrae 21 CH 8812 Horgen Switzerland
(72)**Name of Inventor :**
1)KENWRIGHT Eric Thomas

(57) Abstract :
The invention relates to an open ear clamp comprising a clamping device in the form of a so called Oetiker ear (12). In order to make the installation of the clamp on a pipe (20) easier the clamp is pre deformed beforehand for example in the course of production to such an extent that the clamp surrounds the pipe (20) for which the clamp is intended without play. Because of the elasticity produced in the clamp by this pre deformation the clamp still can be moved effortlessly to the installation location on the pipe (20) and yet is retained there in the position of the clamp and in the desired orientation.

No. of Pages : 7 No. of Claims : 3

(12) PATENT APPLICATION PUBLICATION
(19) INDIA
(22) Date of filing of Application :14/10/2014
(21) Application No.8564/DELNP/2014 A
(43) Publication Date : 22/05/2015

(54) Title of the invention : CELL CULTURING DEVICE

(51) International classification :C12Q1/04,C12M1/14,C12M1/00
(31) Priority Document No :61/624643
(32) Priority Date :16/04/2012
(33) Name of priority country :U.S.A.
(86) International Application No :PCT/US2013/036816
Filing Date :16/04/2013
(87) International Publication No :WO 2013/158666
(61) Patent of Addition to Application Number :NA
Filing Date :NA
(62) Divisional to Application Number :NA
Filing Date :NA

(71)**Name of Applicant :**
1)RAPID MICRO BIOSYSTEMS INC.
Address of Applicant :One Oak Park Drive Bedford MA 01730 U.S.A.
(72)**Name of Inventor :**
1)BROWNE Douglas J.
2)KARAKOZIAN Sarkis
3)CHEN Xiaowei

(57) Abstract :
The invention features devices and kits for capturing and culturing microorganisms (e.g. bacteria fungi or protists) and methods of using the devices and kits to detect microorganisms in environmental and other samples. The device includes a nutrient media having a flat growth area on which microorganisms can grow. Samples are collected by contacting the device with any environmental sample e.g. rolling device on a work surface or exposing device to air or by filtering a sample through a membrane. Microorganisms deposited on the membrane derive nutrients from the underlying media and grow into colonies that can then be detected using methods known in the art. The detected colonies can be imaged digitally or with film.

No. of Pages : 40 No. of Claims : 48

(12) PATENT APPLICATION PUBLICATION
(19) INDIA
(22) Date of filing of Application :14/10/2014
(21) Application No.8565/DELNP/2014 A
(43) Publication Date : 22/05/2015

(54) Title of the invention : LIQUID DISPENSING DEVICE

(51) International classification :B01D3/00,B01D3/32
(31) Priority Document No :1020120030223
(32) Priority Date :23/03/2012
(33) Name of priority country :Republic of Korea
(86) International Application No :PCT/KR2012/006138
Filing Date :01/08/2012
(87) International Publication No :WO 2013/141448
(61) Patent of Addition to Application Number :NA
Filing Date :NA
(62) Divisional to Application Number :NA
Filing Date :NA

(71)**Name of Applicant :**
1)AMTPACIFIC CO.LTD.
Address of Applicant :1F Hanaro Bldg. Insa dong 5 gil 25 Jongno gu Seoul 110 794 Republic of Korea
(72)**Name of Inventor :**
1)LEE Byeong Kyeom
2)KIM Kwang Hyun

(57) Abstract :
The present invention relates to a liquid dispensing device which is placed inside a distillation column and can precisely control the supply ratio of a liquid to continuously supply the liquid. The liquid dispensing device is placed inside a distillation column thereby reducing the total installation space.

No. of Pages : 26 No. of Claims : 10

(12) PATENT APPLICATION PUBLICATION
(19) INDIA
(22) Date of filing of Application :14/10/2014
(21) Application No.8566/DELNP/2014 A
(43) Publication Date : 22/05/2015

(54) Title of the invention : APPARARTUS FOR THERMAL DECOUPLING OF A FORMING BODY IN A GLASS MAKING PROCESS

(51) International classification :C03B18/02,C03B18/18
(31) Priority Document No :13/431340
(32) Priority Date :27/03/2012
(33) Name of priority country :U.S.A.
(86) International Application No :PCT/US2013/033854
Filing Date :26/03/2013
(87) International Publication No :WO 2013/148664
(61) Patent of Addition to Application Number :NA
Filing Date :NA
(62) Divisional to Application Number :NA
Filing Date :NA

(71)**Name of Applicant :**
1)CORNING INCORPORATED
Address of Applicant :1 Riverfront Plaza Corning New York 14831 U.S.A.
(72)**Name of Inventor :**
1)ABDUL RAHMAN Rashid
2)KOCATULUM Bulent

(57) Abstract :
An apparatus for forming a glass sheet with reduced thermal coupling between upper and lower regions of the apparatus is disclosed. The apparatus allows for temperature changes near the lower regions of the enclosure without a large temperature impact on the upper regions of the enclosure thereby providing for greater flexibility in setting a temperature profile for a forming body located within the enclosure.

No. of Pages : 19 No. of Claims : 9

(12) PATENT APPLICATION PUBLICATION
(19) INDIA
(22) Date of filing of Application :14/10/2014
(21) Application No.8592/DELNP/2014 A
(43) Publication Date : 22/05/2015

(54) Title of the invention : METHOD FOR FORMING A QUICKLY HARDENING INORGANIC FOAM

(51) International classification :C04B38/02,C01F7/02,C04B28/26
(31) Priority Document No :10 2012 007 396.8
(32) Priority Date :16/04/2012
(33) Name of priority country :Germany
(86) International Application No :PCT/IB2013/000869
Filing Date :08/04/2013
(87) International Publication No :WO 2013/156852
(61) Patent of Addition to Application Number :NA
Filing Date :NA
(62) Divisional to Application Number :NA
Filing Date :NA

(71)**Name of Applicant :**
1)CAST ALUMINIUM INDUSTRIES
Address of Applicant :Street 15 Plot #368 0452 Al Quoz Industria Area 3 Dubai U.A.E.
(72)**Name of Inventor :**
1)FEIGE Reinhard
2)AHMED Waheed
3)NAZIR Muhammad Kashif

(57) Abstract :
The invention relates to a method for forming a quickly hardening inorganic foam on the basis of the reaction of two components: a) a solid component in the form of a reactive powder which simultaneously has both framework forming properties and pore forming properties and b) a liquid component in the form of an alkali metal silicate (water glass) wherein the reactive powder contains 45 65 wt% of aluminum oxide 10 20 wt% of aluminum nitride and 5 15 wt% of metal aluminum as essential constituents the alkali metal silicate has a molar ratio of silicon oxide to metal oxide of 1.0 2.2 and the two components are mixed at a weight ratio of powder to liquid component of 0.5 2 to form a paste from which a foam body having a bulk density less than 0.7 g/cm3 is then formed in an exothermic reaction in less than 10 minutes.

No. of Pages : 17 No. of Claims : 22

(12) PATENT APPLICATION PUBLICATION
(19) INDIA
(22) Date of filing of Application :14/10/2014
(21) Application No.8593/DELNP/2014 A
(43) Publication Date : 22/05/2015

(54) Title of the invention : PURIFICATION OF TITANIUM TETRACHLORIDE

(51) International classification :C01G23/02,B01J20/18,B01J19/24
(31) Priority Document No :61/636156
(32) Priority Date :20/04/2012
(33) Name of priority country :U.S.A.
(86) International Application No :PCT/US2013/036544
Filing Date :15/04/2013
(87) International Publication No :WO 2013/158525
(61) Patent of Addition to Application Number :NA
Filing Date :NA
(62) Divisional to Application Number :NA
Filing Date :NA

(71)**Name of Applicant :**
1)CRISTAL USA INC.
Address of Applicant :20 Wight Avenue Suite 150 Hunt Valley MD 21030 U.S.A.
(72)**Name of Inventor :**
1)DERECSKEI Bela
2)FINES Alexandre Jean
3)VALENTINE Alastair

(57) Abstract :
Disclosed is a process/system for the removal of metal chloride impurities from a titanium tetrachloride stream. The metal chloride impurities are removed through contact of the titanium tetrachloride stream with an alumino silicate material which can be selected based on certain properties of the alumino silicate and based on the geometries of the impurity(ies) and the alumino silicate.

No. of Pages : 15 No. of Claims : 54

(12) PATENT APPLICATION PUBLICATION
(19) INDIA
(22) Date of filing of Application :14/10/2014
(21) Application No.8594/DELNP/2014 A
(43) Publication Date : 22/05/2015

(54) Title of the invention : COMPOSITION FOR PREVENTING AND/OR TREATING DERMATOSIS AND METHOD FOR OBTAINING SAME

(51) International classification	:A61K36/28,A61K36/48,A61K36/53
(31) Priority Document No	:P201230434
(32) Priority Date	:22/03/2012
(33) Name of priority country	:Spain
(86) International Application No	:PCT/ES2013/070178
Filing Date	:16/03/2013
(87) International Publication No	:WO 2013/140009
(61) Patent of Addition to Application Number	:NA
Filing Date	:NA
(62) Divisional to Application Number	:NA
Filing Date	:NA

(71)**Name of Applicant :**
1)GARCIA GILABERT Juan Miguel
Address of Applicant :C/ Sierra De Cazorla 33 Bajo E 30860 Puerto De Mazarron (Mazarron) Spain
(72)**Name of Inventor :**
1)GARCIA GILABERT Juan Miguel

(57) Abstract :
The invention relates to a composition for preventing and/or treating dermatosis, in particular psoriasis, and to a o method for obtaining same, which includes chamomile, thyme, bay leaf, hops, millet, barley malt, brewers yeast, willow, fenugreek (Trigonella foenum-graecum), salicaria (Lythrum salicaria), hibiscus (Hibiscus), olive oil, bees honey, aloe vera, oat bran, chicory, coparchy (Coutarea latifolia), Stevia, wheat flour, cypress, brewers malt, lanolin, elderberry, goldenrod (Solidago), witch-hazel, heal-all (Prunella vulgaris), and St Johns wort (Hypericum perforatum).

No. of Pages : 7 No. of Claims : 5

(12) PATENT APPLICATION PUBLICATION
(19) INDIA
(22) Date of filing of Application :14/10/2014
(21) Application No.8595/DELNP/2014 A
(43) Publication Date : 22/05/2015

(54) Title of the invention : OPTICAL EFFECT LAYER

(51) International classification :B05D5/06,B05D3/00,B42D15/00
(31) Priority Document No :12003551.4
(32) Priority Date :07/05/2012
(33) Name of priority country :EPO
(86) International Application No :PCT/EP2013/058986
Filing Date :30/04/2013
(87) International Publication No :WO 2013/167425
(61) Patent of Addition to Application Number :NA
Filing Date :NA
(62) Divisional to Application Number :NA
Filing Date :NA

(71)**Name of Applicant :**
1)SICPA HOLDING SA
Address of Applicant :Avenue de Florissant 41 CH 1008 Prilly Switzerland
(72)**Name of Inventor :**
1)DEGOTT Pierre
2)SCHMID Mathieu
3)DESPLAND Claude Alain
4)AMERASINGHE Cdric

(57) Abstract :
The invention relates to the field of graphical elements and is directed to an optical effect layer (OEL) a device and a method for producing same. The invention solves the problem of providing an optical effect that is easy to detect as such and exhibits a viewing angle dependent apparent motion of image features over an extended length if the viewing angle with respect to the OEL changes. This objective is achieved by providing an OEL comprising a binder material being at least partially transparent and a plurality of particles dispersed within the layer. Each particle has a non isotropic reflectivity and may be magnetic or magnetizable. The orientation of the particles forms an orientation pattern extending over a length within an extended surface of the OEL such that in a first cross section of said OEL substantially perpendicular to said extended surface and along said first direction x the local average of an angle between (i) a straight line along an observed longest dimension within the corresponding cross section shape of those non spherical particles which intersect with said first cross section and (ii) said first direction x varies according to a function (T) of a position (P) along said first direction which function is the sum of a monotonically increasing or decreasing first function Ɵ1 of said position and an alternating second function Ɵ2 of said position..Also various variants of devices and a method for producing the OEL are disclosed.

No. of Pages : 65 No. of Claims : 28

(12) PATENT APPLICATION PUBLICATION
(21) Application No.6751/DELNP/2014 A
(19) INDIA
(22) Date of filing of Application :12/08/2014
(43) Publication Date : 22/05/2015

(54) Title of the invention : METHOD FOR PRODUCING A SURFACE STRUCTURE USING A WATER JET DEVICE

(51) International classification :B44B5/02,B44C1/22,B44C5/04
(31) Priority Document No :12004788.1
(32) Priority Date :26/06/2012
(33) Name of priority country :EPO
(86) International Application No :PCT/EP2013/001852
Filing Date :24/06/2013
(87) International Publication No :WO 2014/000879
(61) Patent of Addition to Application Number :NA
Filing Date :NA
(62) Divisional to Application Number :NA
Filing Date :NA

(71)**Name of Applicant :**
1)HUECK RHEINISCHE GMBH
Address of Applicant :Helmholtzstrasse 9 41747 Viersen Germany
(72)**Name of Inventor :**
1)STOFFEL Wolfgang

(57) Abstract :
The invention relates to a method for producing a surface structure (4) of a workpiece (1) in the form of a pressed sheet endless belt or cylindrical embossing roller using at least one water jet device with a machining head (25). The method according to the invention allows workpiece surfaces (2) to be machined in an environmentally friendly and inexpensive manner such that the 3D topography of a surface structure of a template or of the negative of the template is reproduced. The surface (2) of the workpiece (1) is partially removed using a water jet device in the method according to the invention. Using the pressed parts machined in this manner different materials can be pressed for example such as particle boards with support films wherein the 3D topography of the surface structure is reproduced on the surface of the pressed material.

No. of Pages : 37 No. of Claims : 21

(12) PATENT APPLICATION PUBLICATION
(19) INDIA
(22) Date of filing of Application :12/08/2014
(21) Application No.6752/DELNP/2014 A
(43) Publication Date : 22/05/2015

(54) Title of the invention : PRESSING PLATE OR ENDLESS BELT WITH DIFFERENT GLOSS LEVELS AND COMPOSITE BOARD PRODUCED BY WAY THEREOF

(51) International classification :B30B15/06,B44F9/02,B44B5/02
(31) Priority Document No :20 2012 004 375.7
(32) Priority Date :04/05/2012
(33) Name of priority country :Germany
(86) International Application No :PCT/DE2013/000145
Filing Date :15/03/2013
(87) International Publication No :WO 2013/163971
(61) Patent of Addition to Application Number :NA
Filing Date :NA
(62) Divisional to Application Number :NA
Filing Date :NA

(71)**Name of Applicant :**
1)HUECK RHEINISCHE GMBH
Address of Applicant :Helmholtzstrasse 9 41747 Viersen Germany
(72)**Name of Inventor :**
1)STOFFEL Wolfgang
2)MARXEN Martin

(57) Abstract :
The invention relates to a composite board (1) having at least one structured surface side in particular a surface (2) with a wood pore wherein elevated and lowered regions are formed. In order to obtain improved haptics and visual characteristics it is provided that the embossing of the surface (2) takes place by way of a pressing plate or endless belt which has a first gloss level over the full surface area and has been given further different gloss levels in a plurality of selected regions in further working steps wherein the gloss levels can be produced by a metallic coating a mechanical and/or chemical post treatment.

No. of Pages : 23 No. of Claims : 15

(12) PATENT APPLICATION PUBLICATION
(21) Application No.847/DELNP/2012 A
(19) INDIA
(22) Date of filing of Application :30/01/2012
(43) Publication Date : 22/05/2015

(54) Title of the invention : FLAVANONES-CONTAINING FOOD COMPOSITIONS

(51) International classification :A23C 9/152
(31) Priority Document No :09166700.6
(32) Priority Date :29/07/2009
(33) Name of priority country :EPO
(86) International Application No :PCT/EP2010/060607
Filing Date :22/07/2010
(87) International Publication No :WO 2011/012526
(61) Patent of Addition to Application Number :NA
Filing Date :NA
(62) Divisional to Application Number :NA
Filing Date :NA

(71)**Name of Applicant :**
1)NESTEC S.A.
Address of Applicant :AVENUE NESTLE 55, CH-1800 VEVEY, SWITZERLAND
(72)**Name of Inventor :**
1)HOEBLER, PASCALINE

(57) Abstract :
The present invention relates to food products comprising flavanones. In particular, it relates to food products comprising hesperidin having improved stability. The present invention also concerns processes for the manufacturing of food products comprising said flavanones, especially hesperidin and to the use of the food products in the manufacture of compositions for the improvement of bone and skin health.

No. of Pages : 23 No. of Claims : 15

(12) PATENT APPLICATION PUBLICATION
(19) INDIA
(22) Date of filing of Application :14/10/2014
(21) Application No.8598/DELNP/2014 A
(43) Publication Date : 22/05/2015

(54) Title of the invention : OPTIMISED SUBCUTANEOUS THERAPEUTIC AGENTS

(51) International classification :A61K47/48,A61P7/04,A61P31/00
(31) Priority Document No :1206628.8
(32) Priority Date :16/04/2012
(33) Name of priority country :U.K.
(86) International Application No :PCT/EP2013/057928
Filing Date :16/04/2013
(87) International Publication No :WO 2013/156488
(61) Patent of Addition to Application Number :NA
Filing Date :NA
(62) Divisional to Application Number :NA
Filing Date :NA

(71)**Name of Applicant :**
1)CANTAB BIOPHARMACEUTICALS PATENTS LIMITED
Address of Applicant :Palazzo Pietro Stiges 103 Strait Street Valetta VLT1436 Malta
(72)**Name of Inventor :**
1)HENRY William
2)WOLF GARRAWAY Richard
3)MAYO John Charles
4)EARL Michael James

(57) Abstract :
Methods and dosage formulations are provided for subcutaneous administration in which therapeutic agents are modified to increase the hydrophilicity and molecular dimensions in relation to the native state of the therapeutic agent in which the Cmax:Caverage ratio is lower than the Cmax:Caverage ratio of the agent when delivered intravenously.

No. of Pages : 76 No. of Claims : 53

(12) PATENT APPLICATION PUBLICATION
(19) INDIA
(22) Date of filing of Application :14/10/2014
(21) Application No.8599/DELNP/2014 A
(43) Publication Date : 22/05/2015

(54) Title of the invention : STABILIZING COMPOSITION FOR BIOLOGICAL MATERIALS

(51) International classification	:A61K47/36,A61K47/30,A61K47/48
(31) Priority Document No	:61/614994
(32) Priority Date	:23/03/2012
(33) Name of priority country	:U.S.A.
(86) International Application No	:PCT/US2013/033505
Filing Date	:22/03/2013
(87) International Publication No	:WO 2013/142792
(61) Patent of Addition to Application Number	:NA
Filing Date	:NA
(62) Divisional to Application Number	:NA
Filing Date	:NA

(71)**Name of Applicant :**
1)ADVANCED BIONUTRITION CORPORATION
Address of Applicant :7155 Columbia Gateway Drive Suite H Columbia MD 21046 U.S.A.
(72)**Name of Inventor :**
1)HAREL Moti
2)TANG Qiong
3)RICE Trisha
4)JENNINGS Kimberly
5)CARPENTER Brian
6)DREWES Roger
7)RADITSIS Elizabeth

(57) Abstract :
Dry stabilizing compositions for bioactive materials include sugars and hydrolyzed proteins and may be formed into tablets or other forms providing enhanced stability for the bioactive material. Compositions containing the bioactive materials may be produced by a method that includes (a) combining the bioactive material with other ingredients in an aqueous solvent to form a viscous slurry; (b) snap freezing the slurry in liquid nitrogen to form solid frozen particles beads droplets or strings; (c) primary drying by water removal under vacuum of the product of step (b) while maintaining it at a temperature above its freezing temperature; and (d) secondary drying of the product of step (c) at maximum vacuum and a temperature of 20°C or higher for a time sufficient to reduce the water activity to below 0.3 Aw.

No. of Pages : 77 No. of Claims : 41

(12) PATENT APPLICATION PUBLICATION
(19) INDIA
(22) Date of filing of Application :12/08/2014
(21) Application No.6789/DELNP/2014 A
(43) Publication Date : 22/05/2015

(54) Title of the invention : SYSTEMIC DELIVERY AND REGULATED EXPRESSION OF PARACRINE GENES FOR CARDIOVASCULAR DISEASES AND OTHER CONDITIONS

(51) International classification	:A61K48/00,A61K38/17,A61K38/16
(31) Priority Document No	:61/598772
(32) Priority Date	:14/02/2012
(33) Name of priority country	:U.S.A.
(86) International Application No	:PCT/US2013/025997
Filing Date	:13/02/2013
(87) International Publication No	:WO 2013/123094
(61) Patent of Addition to Application Number	:NA
Filing Date	:NA
(62) Divisional to Application Number	:NA
Filing Date	:NA

(71)**Name of Applicant :**
1)THE REGENTS OF THE UNIVERSITY OF CALIFORNIA
Address of Applicant :1111 Franklin Street 8th Floor Oakland CA 94607 5200 U.S.A.
(72)**Name of Inventor :**
1)HAMMOND H. Kirk
2)GAO Mei Hua

(57) Abstract :
In alternative embodiments the invention provides methods for treating ameliorating or protecting (preventing) an individual or a patient against a disease an infection or a condition responsive to an increased paracrine polypeptide level in vivo comprising: providing a paracrine polypeptide encoding nucleic acid or gene operatively linked to a transcriptional regulatory sequence; or an expression vehicle a vector a recombinant virus or equivalent having contained therein a paracrine encoding nucleic acid or gene and the expression vehicle vector recombinant virus or equivalent can express the paracrine encoding nucleic acid or gene in a cell or in vivo; and administering or delivering the paracrine polypeptide encoding nucleic acid or gene operatively linked to a transcriptional regulatory sequence or the expression vehicle vector recombinant virus or equivalent to an individual or a patient in need thereof thereby treating ameliorating or protecting (preventing) the individual or patient against the disease infection or condition responsive to an increased paracrine polypeptide level.

No. of Pages : 91 No. of Claims : 18

(12) PATENT APPLICATION PUBLICATION
(21) Application No.6790/DELNP/2014 A
(19) INDIA
(22) Date of filing of Application :12/08/2014
(43) Publication Date : 22/05/2015

(54) Title of the invention : HUB AND SPOKES PIN VERIFICATION

(51) International classification	:G07F7/10,G06Q20/20,G07F7/08	(71)**Name of Applicant :**
(31) Priority Document No	:61/595867	**1)IZETTLE MERCHANT SERVICES AB**
(32) Priority Date	:07/02/2012	Address of Applicant :Kungsgatan 9 S 111 43 Stockholm Sweden
(33) Name of priority country	:U.S.A.	(72)**Name of Inventor :**
(86) International Application No	:PCT/EP2012/001114	**1)Magnus Nilsson**
Filing Date	:13/03/2012	
(87) International Publication No	:WO 2013/087126	
(61) Patent of Addition to Application Number	:NA	
Filing Date	:NA	
(62) Divisional to Application Number	:NA	
Filing Date	:NA	

(57) Abstract :
A method for conducting PIN authorized EMV payments using an ordinary mobile phone. The credit card payment is conducted using a merchant s device comprising a card reader and a mobile phone a payment server and a buyer s mobile phone. A PIN entry request is sent from the merchant s device to the buyer s device via the payment server. A secure application in the buyer s device is executed and a PIN code may be entered securely. The entered PIN code is either verified via the payment server against the credit card in said merchant s device or against a bank server. Thus secure credit card payments can be performed using an ordinary unsecure mobile device s.

No. of Pages : 28 No. of Claims : 8

(12) PATENT APPLICATION PUBLICATION
(19) INDIA
(22) Date of filing of Application :14/10/2014
(21) Application No.8601/DELNP/2014 A
(43) Publication Date : 22/05/2015

(54) Title of the invention : SYSTEMS AND METHODS FOR DETECTING WELDING AND CUTTING PARAMETERS

(51) International classification :B23K9/095,H01R9/05
(31) Priority Document No :61/636014
(32) Priority Date :20/04/2012
(33) Name of priority country :U.S.A.
(86) International Application No :PCT/US2013/036720
Filing Date :16/04/2013
(87) International Publication No :WO 2013/158601
(61) Patent of Addition to Application Number :NA
Filing Date :NA
(62) Divisional to Application Number :NA
Filing Date :NA

(71)**Name of Applicant :**
1)ILLINOIS TOOL WORKS INC.
Address of Applicant :155 Harlem Avenue Glenview Illinois 60025 U.S.A.
(72)**Name of Inventor :**
1)HOLVERSON Todd Earl
2)LEITERITZ Nathan Gerald
3)SCHROEDER Jeffery P.

(57) Abstract :
A system for detecting welding and cutting parameters is provided. One embodiment of the system includes an input terminal (72) configured to receive signals corresponding to welding or cutting parameters from a first welding or cutting device (12). None of the signals carry welding power. The system also includes an output terminal (4) configured to provide the signals to a second welding or cutting device (14). The system includes conductors (92) coupled between the input terminal (72) and the output terminal (74) and configured to carry the signals between the input terminal and the output terminal. The system also includes control circuitry (96) configured to detect the welding or cutting parameters from the signals.

No. of Pages : 23 No. of Claims : 20

(12) PATENT APPLICATION PUBLICATION
(21) Application No.8602/DELNP/2014 A
(19) INDIA
(22) Date of filing of Application :14/10/2014
(43) Publication Date : 22/05/2015

(54) Title of the invention : AIR FLOW SWITCH FOR AN ELECTROSTATIC TOOL

(51) International classification :B05B5/053,H02K7/18,F01D17/10
(31) Priority Document No :61/635823
(32) Priority Date :19/04/2012
(33) Name of priority country :U.S.A.
(86) International Application No :PCT/US2013/031089
Filing Date :13/03/2013
(87) International Publication No :WO 2013/158266
(61) Patent of Addition to Application Number :NA
Filing Date :NA
(62) Divisional to Application Number :NA
Filing Date :NA

(71)**Name of Applicant :**
1)FINISHING BRANDS HOLDINGS INC.
Address of Applicant :88 11th Avenue Ne Minneapolis MN 55413 U.S.A.
(72)**Name of Inventor :**
1)BALTZ James P.

(57) Abstract :
A power module (100) of electrostatic tool (10) is provided with an air flow switch (202). The air flow switch (202) receives an air flow through one passage (102) and outputs two portions of that air flow through two other passages (210 212) when the air flow exceeds a threshold pressure.

No. of Pages : 30 No. of Claims : 20

(12) PATENT APPLICATION PUBLICATION
(21) Application No.8603/DELNP/2014 A
(19) INDIA
(22) Date of filing of Application :14/10/2014
(43) Publication Date : 22/05/2015

(54) Title of the invention : CONVEYOR CHAIN LINK CONVEYOR CHAIN DRIVE WHEEL FOR A CONVEYOR CHAIN AND A SYSTEM COMPRISING SUCH A DRIVE WHEEL

(51) International classification :B65G17/08,B65G23/06
(31) Priority Document No :12502720
(32) Priority Date :20/03/2012
(33) Name of priority country :Sweden
(86) International Application No :PCT/SE2013/050307
Filing Date :20/03/2013
(87) International Publication No :WO 2013/141806
(61) Patent of Addition to Application Number :NA
Filing Date :NA
(62) Divisional to Application Number :NA
Filing Date :NA

(71)**Name of Applicant :**
1)FLEXLINK AB
Address of Applicant :S 415 50 Gteborg Sweden
(72)**Name of Inventor :**
1)MIGLAVS Peter

(57) Abstract :
A conveyor chain link provided with an upper body having a carrying surface and a lower body having a front end and a rear end where the rear end is provided with a first leg and a second leg arranged at a certain distance from each other such that the front end of a chain link fits between the first and second legs of an adjacent chain link when mounted in a conveyor chain where where a first protrusion of the first leg is provided with a first tab extending towards the front end and a second protrusion of the second leg is provided with a second tab extending towards the front end where the bearing surfaces of the tabs are parallel with the carrying surface of the upper body. A conveyor chain comprising a plurality of such conveyor chain links a drive wheel adapted for such a conveyor chain link and a conveyor system comprising such a conveyor chain are also disclosed. The advantage of the chain link is that a larger bearing surface is provided for a conveyor chain for the return path which will reduce wear and further will reduce vibrations from the conveyor chain.

No. of Pages : 18 No. of Claims : 12

(12) PATENT APPLICATION PUBLICATION
(19) INDIA
(22) Date of filing of Application :14/08/2014
(21) Application No.6847/DELNP/2014 A
(43) Publication Date : 22/05/2015

(54) Title of the invention : X RAY DEVICE AND METHOD FOR CONTROLLING THE SAME

(51) International classification :A61B6/10
(31) Priority Document No :1020120015545
(32) Priority Date :15/02/2012
(33) Name of priority country :Republic of Korea
(86) International Application No :PCT/KR2013/001205
Filing Date :15/02/2013
(87) International Publication No :WO 2013/122421
(61) Patent of Addition to Application Number :NA
Filing Date :NA
(62) Divisional to Application Number :NA
Filing Date :NA

(71)**Name of Applicant :**
1)SAMSUNG ELECTRONICS CO. LTD.
Address of Applicant :129 Samsung ro Yeongtong gu Suwon si Gyeonggi do 443 742 Republic of Korea
(72)**Name of Inventor :**
1)KIM Hyun Sun
2)SHIN Jong Hyun
3)HAN Woo Sup

(57) Abstract :
Disclosed are an X ray device to inform a patient of X ray irradiation through a sound and a method for controlling the same. The X ray device includes an input portion to output a first step press signal and a second step press signal according to an operator input a high voltage generating portion to perform pre heating and to output a ready completion signal when the high voltage generating portion completes pre heating a control portion to output a sound output signal when it receives both the second step press signal output from the input portion and the ready completion signal output from the high voltage generating portion and a sound output portion to receive the sound output signal output from the control portion and to output a predetermined sound.

No. of Pages : 35 No. of Claims : 20

(12) PATENT APPLICATION PUBLICATION
(21) Application No.6848/DELNP/2014 A
(19) INDIA
(22) Date of filing of Application :14/08/2014
(43) Publication Date : 22/05/2015

(54) Title of the invention : METHOD FOR PRODUCING OLEFIN

(51) International classification :C07C1/24,C07C1/207,C07C11/06
(31) Priority Document No :2012010148
(32) Priority Date :20/01/2012
(33) Name of priority country :Japan
(86) International Application No :PCT/JP2012/083124
Filing Date :20/12/2012
(87) International Publication No :WO 2013/108543
(61) Patent of Addition to Application Number :NA
Filing Date :NA
(62) Divisional to Application Number :NA
Filing Date :NA

(71)**Name of Applicant :**
1)MITSUI CHEMICALS INC.
Address of Applicant :5 2 Higashi Shimbashi 1 chome Minato ku Tokyo 1057117 Japan
(72)**Name of Inventor :**
1)ISHIBASHI Masayasu
2)OHKUBO Tsuneyuki

(57) Abstract :
The purpose of the invention is to provide a method for producing an olefin that makes it possible to produce an olefin efficiently by a dehydration reaction of an alcohol without secondary reactions such as aldol condensation of a ketone even in the joint presence of a ketone and to provide a method for producing an olefin that makes it possible to produce the corresponding olefin at high activity and high selectivity by directly reacting a ketone and hydrogen in a single reaction step. This method produces an olefin from an alcohol using as a dehydration catalyst a silica gel (A) containing 10 1000 ppm of an aluminum compound as elemental aluminum and a total of 0 350 ppm of an alkali metal and alkaline earth metal obtained by bringing a silica gel (X) prepared from an alkyl orthosilicate into contact with a water soluble aluminum compound and then firing the gel or obtained from a wet process silica gel (Y) prepared from an alkali silicate salt; and produces an olefin from a ketone and hydrogen in a single reaction step in the presence of the silica gel (A) and a silver containing inorganic substance (B).

No. of Pages : 83 No. of Claims : 14

(12) PATENT APPLICATION PUBLICATION
(21) Application No.6849/DELNP/2014 A
(19) INDIA
(22) Date of filing of Application :14/08/2014
(43) Publication Date : 22/05/2015

(54) Title of the invention : BOX WITH A WHEEL ASSEMBLY AND A TOW STRAP

(51) International classification :B65D25/24,B62B5/00,B62B3/02
(31) Priority Document No :61/599600
(32) Priority Date :16/02/2012
(33) Name of priority country :U.S.A.
(86) International Application No :PCT/US2013/026383
Filing Date :15/02/2013
(87) International Publication No :WO 2013/123352
(61) Patent of Addition to Application Number :NA
Filing Date :NA
(62) Divisional to Application Number :NA
Filing Date :NA

(71)**Name of Applicant :**
1)INTERNATIONAL PAPER COMPANY
Address of Applicant :6400 Poplar Avenue Memphis TN 38197 U.S.A.
(72)**Name of Inventor :**
1)FABER Richard D.
2)BUSS Kenneth
3)BEVIER Alex D.
4)JAMBOIS Brian K.

(57) Abstract :
A box with a wheel assembly platform has a tow strap with a folded position stowed in a recess in the platform and an unfolded position accessible outside the box. In one embodiment the strap is incorporated in a pre assembled handle pack positioned in the recess. The strap may be retracted by a torsion spring and may be coiled in the pack by use of a rotating fork. In one embodiment axles projecting from rollers are supported in recesses formed in the platform and in another embodiment the axles are supported in notches in the bottom end of cylinders mounted in cutouts in the platform. In a further embodiment a box has hand holes in opposite walls with a spacer panel providing finger access behind the holes. The platform may have hinged panels. A thermo formed skin may be applied to the platform or constitute the platform.

No. of Pages : 73 No. of Claims : 57

(12) PATENT APPLICATION PUBLICATION
(21) Application No.8618/DELNP/2014 A
(19) INDIA
(22) Date of filing of Application :15/10/2014
(43) Publication Date : 22/05/2015

(54) Title of the invention : STEEL SHEET SUITABLE AS IMPACT ABSORBING MEMBER AND METHOD FOR MANUFACTURING SAME

(51) International classification :C22C38/00,C21D9/46,C22C38/38
(31) Priority Document No :2012088944
(32) Priority Date :10/04/2012
(33) Name of priority country :Japan
(86) International Application No :PCT/JP2013/060625
Filing Date :08/04/2013
(87) International Publication No :WO 2013/154071
(61) Patent of Addition to Application Number :NA
Filing Date :NA
(62) Divisional to Application Number :NA
Filing Date :NA

(71)**Name of Applicant :**
1)NIPPON STEEL & SUMITOMO METAL CORPORATION
Address of Applicant :6 1 Marunouchi 2 chome Chiyoda ku Tokyo 1008071 Japan
(72)**Name of Inventor :**
1)TANAKA Yasuaki
2)KAWANO Kaori
3)TASAKA Masahito
4)NAKAZAWA Yoshiaki
5)NISHIO Takuya
6)WAKITA Masayuki
7)HAGA Jun
8)TOMIDA Toshiro

(57) Abstract :
The steel sheet of the present invention being suitable as a raw material for an automobile impact absorbing member having high impact absorbing energy and not being resistant to cracking even when crushed has a chemical composition containing by mass% 0.08 0.30% C 1.5 3.5% Mn 0.50 3.0% Si + Al 0.10% or less P 0.010% or less S 0.010% or less N and also in some cases one or more species selected from 0.5% or less Cr 0.5% or less Mo 0.010% or less B less than 0.04% Ti less than 0.030% Nb less than 0.5% V 0.010% or less Ca 0.010% or less Mg 0.050% or less REM and 0.050% or less Bi. The steel sheet has a microstructure containing by area% more than 50% bainite 3 30% martensite and 3 15% residual austenite the remainder comprising ferrite having an average particle diameter of less than 5 µm. The steel sheet also has mechanical characteristics in which the product of the uniform elongation and the hole expansion ratio is at least 300% and the 5% effective flow stress is at least 900 MPa.

No. of Pages : 43 No. of Claims : 7

(12) PATENT APPLICATION PUBLICATION
(19) INDIA
(22) Date of filing of Application :24/01/2012
(21) Application No.713/DELNP/2012 A
(43) Publication Date : 22/05/2015

(54) Title of the invention : NUTRITIONAL COMPOSITIONS COMPRISING FIBER AND PROBIOTICS

(51) International classification :A23L 1/30
(31) Priority Document No :61/228,693
(32) Priority Date :27/07/2009
(33) Name of priority country :U.S.A.
(86) International Application No :PCT/US2010/043189
Filing Date :26/07/2010
(87) International Publication No :WO 2010/017040
(61) Patent of Addition to Application Number :NA
Filing Date :NA
(62) Divisional to Application Number :NA
Filing Date :NA

(71)**Name of Applicant :**
1)NESTEC S.A.
Address of Applicant :AVENUE NESTLE 55, CH-1800 VEVEY, SWITZERLAND
(72)**Name of Inventor :**
1)LATHAN, GABY
2)GROSJEAN, JAMES
3)GREENBERG, NORMAN, ALAN

(57) Abstract :
Nutritional compositions including fiber blends having a stable amount of probiotics and methods of making the nutritional compositions are provided. In a general embodiment, the present disclosure provides a nutritional composition including a fiber blend having agglomerated fiber particulates and a probiotic. The fiber blend can have a water activity of less than about 0.15. The nutritional composition can be in an administerable form such as pharmaceutical formulations, nutritional formulations, dietary supplements, functional foods and beverage products.

No. of Pages : 20 No. of Claims : 23

(12) PATENT APPLICATION PUBLICATION
(21) Application No.8611/DELNP/2014 A
(19) INDIA
(22) Date of filing of Application :14/10/2014
(43) Publication Date : 22/05/2015

(54) Title of the invention : TRAPEZOIDIAL THREAD FORM HAVING A WEAR INDICATOR AND HIGH PRESSURE CONNECTION FITTING COMPRISING SAME

(51) International classification :F16L15/06
(31) Priority Document No :61/618382
(32) Priority Date :30/03/2012
(33) Name of priority country :U.S.A.
(86) International Application No :PCT/US2013/034065
Filing Date :27/03/2013
(87) International Publication No :WO 2013/148814
(61) Patent of Addition to Application Number :NA
Filing Date :NA
(62) Divisional to Application Number :NA
Filing Date :NA

(71)**Name of Applicant :**
1)EMERSON PROCESS MANGEMENT REGULATOR TECHNOLOGIES INC.
Address of Applicant :310 East University Drive McKinney TX 75070 U.S.A.
(72)**Name of Inventor :**
1)NASHERY Khashayar A.
2)SCHEFFLER Douglas J.

(57) Abstract :
A trapezoidal thread form includes a thread having a trapezoidal cross sectional shape the thread including an apex surface (42) two side surfaces (32,34) and a valley; and a thread wear indicator (50) formed in one of the apex surface (42) and one of the side surfaces (32,34). The thread wear indicator (50) may include a v shaped channel (52) formed in one of the apex surface (42) and one of the side surfaces (32,34) or the thread wear indicator (50) may include a series of material layers each layer having a physical characteristic that is different from an adjacent material layer. The thread wear indicator (50) indicates excessive or unsafe thread wear when the v shaped channel (52) is indistinguishable from the apex surface (42) or the side surface (32,34) or when a first layer wears sufficiently to show a second layer.

No. of Pages : 16 No. of Claims : 20

(12) PATENT APPLICATION PUBLICATION
(19) INDIA
(22) Date of filing of Application :14/10/2014
(21) Application No.8612/DELNP/2014 A
(43) Publication Date : 22/05/2015

(54) Title of the invention : FLUID REGULATOR HAVING IMPROVED FLOW STABILITY

(51) International classification :G05D16/06
(31) Priority Document No :61/618557
(32) Priority Date :30/03/2012
(33) Name of priority country :U.S.A.
(86) International Application No :PCT/US2013/034080
Filing Date :27/03/2013
(87) International Publication No :WO 2013/148819
(61) Patent of Addition to Application Number :NA
Filing Date :NA
(62) Divisional to Application Number :NA
Filing Date :NA

(71)**Name of Applicant :**
1)EMERSON PROCESS MANAGEMENT REGULATOR TECHNOLOGIES INC.
Address of Applicant :310 East University Drive Mckinney TX 75070 U.S.A.
(72)**Name of Inventor :**
1)NASHERY Khashayar A.
2)SCHEFFLER Douglas J.

(57) Abstract :
A fluid regulator includes a regulator body having a fluid inlet and a fluid outlet connected by a fluid flow path with a portion of the regulator body forming a first chamber and a second chamber an orifice disposed in the fluid flow path a seat and a control element disposed within the fluid flow path and shiftable between an open position spaced away from the seat and a closed position seated against the seat with the control element arranged to respond to fluid pressure changes to control flow of a process fluid through the orifice. A first diaphragm having a radially inner portion is operatively coupled to the control element and a second diaphragm having a radially inner portion also is operatively coupled to the control element.

No. of Pages : 25 No. of Claims : 23

(12) PATENT APPLICATION PUBLICATION
(21) Application No.8615/DELNP/2014 A
(19) INDIA
(22) Date of filing of Application :15/10/2014
(43) Publication Date : 22/05/2015

(54) Title of the invention : A METHOD OF MODIFYING BETA STUCCO USING DIETHYLENE TRIAMINE PENTAACETIC ACID

(51) International classification :C04B11/00,C04B20/10
(31) Priority Document No :13/435781
(32) Priority Date :30/03/2012
(33) Name of priority country :U.S.A.
(86) International Application No :PCT/US2013/033414
Filing Date :22/03/2013
(87) International Publication No :WO 2013/148484
(61) Patent of Addition to Application Number :NA
Filing Date :NA
(62) Divisional to Application Number :NA
Filing Date :NA

(71)**Name of Applicant :**
1)UNITED STATES GYPSUM COMPANY
Address of Applicant :550 West Adams Street Chicago Illinois 60661 3676 U.S.A.
(72)**Name of Inventor :**
1)LETTKEMAN Dennis M.
2)KALIGIAN Raymond A. II
3)CLOUD Michael L.
4)WILSON John W.

(57) Abstract :
A method for preparing a modified beta stucco from calcined natural rock gypsum that includes preparing a solution of liquid diethylene triamine pentaacetic acid in water applying the solution onto beta stucco while hot from the calciner forming a wetted beta stucco and allowing the wetted stucco to dry and heal forming the modified beta stucco.

No. of Pages : 20 No. of Claims : 10

(12) PATENT APPLICATION PUBLICATION
(19) INDIA
(22) Date of filing of Application :15/10/2014
(21) Application No.8616/DELNP/2014 A
(43) Publication Date : 22/05/2015

(54) Title of the invention : TURBOCHARGER BEARING HOUSING WITH INTEGRATED HEAT SHIELD

(51) International classification	:F02B39/00,F02B39/14,F02B37/00
(31) Priority Document No	:61/617944
(32) Priority Date	:30/03/2012
(33) Name of priority country	:U.S.A.
(86) International Application No	:PCT/US2013/033418
Filing Date	:22/03/2013
(87) International Publication No	:WO 2013/148486
(61) Patent of Addition to Application Number	:NA
Filing Date	:NA
(62) Divisional to Application Number	:NA
Filing Date	:NA

(71)**Name of Applicant :**
1)BORGWARNER INC.
Address of Applicant :Patent Department 3850 Hamlin Road Auburn Hills Michigan 48326 U.S.A.
(72)**Name of Inventor :**
1)BUCKING Michael
2)WARD Daniel N.

(57) Abstract :
A system and method is provided in which a turbocharger includes a heat shield wall that is formed together with the bearing housing as a unitary structure. The wall can extend from a main body portion of the bearing housing in a generally radially outward direction. The wall can be spaced from the main body and attached by a plurality of ribs such that chambers are defined therebetween. A circumferential passage can extend through the bearing housing to permit fluid communication between the chambers and outside of the bearing housing. In this way a fluid outlet from the chambers is provided. As a result of such an arrangement the need for a separate heat shield is eliminated which can facilitate the assembly process and special attachment methods associated with a separate heat shield.

No. of Pages : 21 No. of Claims : 15

(12) PATENT APPLICATION PUBLICATION
(21) Application No.6837/DELNP/2014 A
(19) INDIA
(22) Date of filing of Application :14/08/2014
(43) Publication Date : 22/05/2015

(54) Title of the invention : RADIO BASE STATION AND METHOD THEREIN FOR TRANSMITTING A DATA SIGNAL TO A USER EQUIPMENT IN A RADIO COMMUNICATIONS NETWORK

(51) International classification :H04B7/06
(31) Priority Document No :NA
(32) Priority Date :NA
(33) Name of priority country :NA
(86) International Application No :PCT/SE2012/050239
Filing Date :02/03/2012
(87) International Publication No :WO 2013/129984
(61) Patent of Addition to Application Number :NA
Filing Date :NA
(62) Divisional to Application Number :NA
Filing Date :NA

(71)**Name of Applicant :**
1)TELEFONAKTIEBOLAGET L M ERICSSON (PUBL)
Address of Applicant :SE 164 83 Stockholm Sweden
(72)**Name of Inventor :**
1)WERNERSSON Niklas
2)BERGMAN Svante
3)J–NGREN George

(57) Abstract :
Embodiments herein relate to a method in a radio base station (12) for transmitting a data signal to a user equipment (10) in a radio communications network. The radio base station (12) is connected to an active antenna array of a number of active transmitting antennas and the radio base station (12) serves the user equipment (10) in the radio communications network. Each active transmitting antenna comprises sub elements. The radio base station (12) transforms a precoded data signal using a transformation which transformation directs signals vertically. Furthermore the radio base station (12) transmits the transformed data signal over at least one sub element to the user equipment (10). The transmitted data signal is enabled to be directed vertically and the transformed data signal is limited to be transmitted in a direction within a range of elevation angles.

No. of Pages : 38 No. of Claims : 26

(12) PATENT APPLICATION PUBLICATION
(19) INDIA
(22) Date of filing of Application :14/08/2014
(21) Application No.6838/DELNP/2014 A
(43) Publication Date : 22/05/2015

(54) Title of the invention : COATED ELECTRICAL ASSEMBLY

(51) International classification :B05D7/00,B05D1/00,H05K3/28
(31) Priority Document No :1203927.7
(32) Priority Date :06/03/2012
(33) Name of priority country :U.K.
(86) International Application No :PCT/GB2013/050550
Filing Date :06/03/2013
(87) International Publication No :WO 2013/132250
(61) Patent of Addition to Application Number :NA
Filing Date :NA
(62) Divisional to Application Number :NA
Filing Date :NA

(71)**Name of Applicant :**
1)SEMBLANT LIMITED
Address of Applicant :301 Harbour Yard Chelsea Harbour London SW1O 0XD U.K.
(72)**Name of Inventor :**
1)BROOKS Andrew
2)VON WERNE Timothy

(57) Abstract :
The present invention relates to an electrical assembly which has a conformal coating wherein said conformal coating is obtainable by a method which comprises plasma polymerization of a compound of formula (I) and deposition of the resulting polymer and plasma polymerization of a fluorohydrocarbon and deposition of the resulting polymer: (I) wherein: R represents C C alkyl or C C alkenyl; R represents hydrogen C C alkyl or C C alkenyl; R represents hydrogen C C alkyl or C C alkenyl; R represents hydrogen C C alkyl or C C alkenyl; Rrepresents hydrogen C C alkyl or C C alkenyl;; and R represents hydrogen C C alkyl or C C alkenyl.

No. of Pages : 33 No. of Claims : 16

(12) PATENT APPLICATION PUBLICATION
(19) INDIA
(22) Date of filing of Application :14/08/2014
(21) Application No.6839/DELNP/2014 A
(43) Publication Date : 22/05/2015

(54) Title of the invention : COATING COLOR EVALUATION METHOD

(51) International classification :G01J3/46
(31) Priority Document No :2012025028
(32) Priority Date :08/02/2012
(33) Name of priority country :Japan
(86) International Application No :PCT/JP2013/053059
Filing Date :08/02/2013
(87) International Publication No :WO 2013/118868
(61) Patent of Addition to Application Number :NA
Filing Date :NA
(62) Divisional to Application Number :NA
Filing Date :NA

(71)**Name of Applicant :**
1)KANSAI PAINT CO. LTD.
Address of Applicant :33 1 Kanzaki cho Amagasaki shi Hyogo 6618555 Japan
(72)**Name of Inventor :**
1)MATSUSHITA Akiko
2)HARADA Osamu
3)KURAMOCHI Tatsuo

(57) Abstract :
The coating color evaluation method according to the present invention is a method for evaluating the coating color of paint that includes a color pigment and a photoluminescent pigment wherein the spectral reflectivity of the coating film of the paint is measured and the ratio (C/L) of the luminosity (L) and the chroma (C) in an LCh color system is calculated from the spectral reflectivity.

No. of Pages : 45 No. of Claims : 5

(12) PATENT APPLICATION PUBLICATION
(19) INDIA
(22) Date of filing of Application :15/10/2014
(21) Application No.8634/DELNP/2014 A
(43) Publication Date : 22/05/2015

(54) Title of the invention : DEGASSING DEVICE FOR TREATING FOOD PRODUCTS

(51) International classification	:B01D19/00,A23L2/76,A23N15/00
(31) Priority Document No	:RM2012A000127
(32) Priority Date	:30/03/2012
(33) Name of priority country	:Italy
(86) International Application No	:PCT/IT2013/000091
Filing Date	:28/03/2013
(87) International Publication No	:WO 2013/144989
(61) Patent of Addition to Application Number	:NA
Filing Date	:NA
(62) Divisional to Application Number	:NA
Filing Date	:NA

(71)**Name of Applicant :**
1)TURATTI S.R.L.
Address of Applicant :San Marco 1901 I 30124 Venzezia (VE) Italy
(72)**Name of Inventor :**
1)TURATTI Antonio

(57) Abstract :
Degassing device (21) for systems for treatment of food products (12) such as leaf vegetables tuberous fruit of meet cheeses or sausages and like characterized in that it comprises a degassing conduct (22) for a food product (12) treatment fluid said degassing conduct (22) having in sequence along its development trajectory an inclined inlet tract (23) within which said flow fluid rises a degassing tract (24) and an outlet tract (25) within which said flow is directed downward; and a degassing chamber (27) in correspondence of said degassing tract (24); said degassing tract (24) having at least on its upper wall (24a) a plurality of holes (26) suitable to communicate said degassing tract (24) with said degassing tract (27) to permit exit of air bubbles trapped within said flow from said degassing chamber (27) preventing exit of food products (12).

No. of Pages : 11 No. of Claims : 10

(12) PATENT APPLICATION PUBLICATION
(21) Application No.8636/DELNP/2014 A
(19) INDIA
(22) Date of filing of Application :15/10/2014
(43) Publication Date : 22/05/2015

(54) Title of the invention : GENERATOR OF A GEARLESS WIND POWER PLANT

(51) International classification :F03D9/00,F03D1/00,H02K3/02
(31) Priority Document No :10 2012 208 550.5
(32) Priority Date :22/05/2012
(33) Name of priority country :Germany
(86) International Application No :PCT/EP2013/060081
Filing Date :15/05/2013
(87) International Publication No :WO 2013/174700
(61) Patent of Addition to Application Number :NA
Filing Date :NA
(62) Divisional to Application Number :NA
Filing Date :NA

(71)**Name of Applicant :**
1)WOBBEN PROPERTIES GMBH
Address of Applicant :Dreekamp 5 26605 Aurich Germany
(72)**Name of Inventor :**
1)GIENGIEL Wojciech

(57) Abstract :
The invention relates to a generator (1) of a gearless wind power plant (100) having a stator (2) and a rotor (4) wherein the stator (2) and/or the rotor (4) have/has windings (14,30) made of aluminium.

No. of Pages : 17 No. of Claims : 9

(12) PATENT APPLICATION PUBLICATION
(19) INDIA
(22) Date of filing of Application :25/01/2012
(21) Application No.760/DELNP/2012 A
(43) Publication Date : 22/05/2015

(54) Title of the invention : METHODS AND COMPOSITIONS FOR IMPROVING GASTROINTESTINAL HEALTH

(51) International classification :A61K 9/14
(31) Priority Document No :61/273,506
(32) Priority Date :05/08/2009
(33) Name of priority country :U.S.A.
(86) International Application No :PCT/US2010/002179
Filing Date :04/08/2010
(87) International Publication No :WO 2011/016866
(61) Patent of Addition to Application Number :NA
Filing Date :NA
(62) Divisional to Application Number :NA
Filing Date :NA

(71)**Name of Applicant :**
1)NESTEC S.A.
Address of Applicant :AVENUE NESTLE 55, CH-1800 VEVEY, SWITZERLAND
(72)**Name of Inventor :**
1)XU, HUI
2)LAFLAMME, DOROTHY, PAULINE
3)CUPP, CAROLYN, JEAN

(57) Abstract :
Methods for maintaining or improving the gastrointestinal health of animals susceptible to or suffering from poor gastrointestinal health by administering to the animal a gastrointestinal health maintaining or improving amount of a food composition comprising from about 1 to about 20% carbohydrate; from about 3 to about 10% total dietary fiber, wherein the total dietary fiber contains from about 10 to about 40% soluble fiber and from about 90 to about 60% insoluble fiber; and from about 0.1 to about 10% omega-3 fatty acids; wherein the composition has a digestibility coefficient of at least 80. Generally, the compositions are administered to the animal to prevent or treat diarrhea or to improve stool quality. Further, the compositions may be administered in conjunction with one or more probiotics, prebiotics, anti-gastritis drugs, anti-enteritis drugs, or anti-diarrhea drugs, microbial exopolysaccharides, or combinations thereof to maintain or improve gastrointestinal health.

No. of Pages : 22 No. of Claims : 43

(12) PATENT APPLICATION PUBLICATION
(19) INDIA
(22) Date of filing of Application :15/10/2014
(21) Application No.8623/DELNP/2014 A
(43) Publication Date : 22/05/2015

(54) Title of the invention : RADIO NETWORK NODE USER EQUIPMENT AND METHODS THEREIN

(51) International classification :H04W52/14,H04W52/22,H04W52/38
(31) Priority Document No :NA
(32) Priority Date :NA
(33) Name of priority country :NA
(86) International Application No :PCT/SE2012/050458
Filing Date :03/05/2012
(87) International Publication No :WO 2013/165286
(61) Patent of Addition to Application Number :NA
Filing Date :NA
(62) Divisional to Application Number :NA
Filing Date :NA

(71)**Name of Applicant :**
1)TELEFONAKTIEBOLAGET LM ERICSSON (publ)
Address of Applicant :SE 164 83 Stockholm Sweden
(72)**Name of Inventor :**
1)ERIKSSON Erik
2)ASTELY David

(57) Abstract :
Some embodiments herein relate to method in a user equipment (10) for determining a transmit power to be used by the user equipment when transmitting in a radio communications network which user equipment (10) is served by a radio network node (12,12) in the radio communications network. The user equipment (10) receives from the radio network node (12,12) an indication indicating a set of power control parameters out of multiple sets of power control parameters which multiple sets of power control parameters are stored at the user equipment (10). The user equipment (10) determines a transmit power based on the indicated set of power control parameters.

No. of Pages : 35 No. of Claims : 32

(12) PATENT APPLICATION PUBLICATION
(19) INDIA
(22) Date of filing of Application :15/10/2014
(21) Application No.8624/DELNP/2014 A
(43) Publication Date : 22/05/2015

(54) Title of the invention : A METHOD AND APPARATUS FOR MIXER BASED HARMONIC REJECTION

(51) International classification :H03D7/14
(31) Priority Document No :13/450537
(32) Priority Date :19/04/2012
(33) Name of priority country :U.S.A.
(86) International Application No :PCT/EP2013/057966
Filing Date :17/04/2013
(87) International Publication No :WO 2013/156507
(61) Patent of Addition to Application Number :NA
Filing Date :NA
(62) Divisional to Application Number :NA
Filing Date :NA

(71)**Name of Applicant :**
1)TELEFONAKTIEBOLAGET L M ERICSSON (PUBL)
Address of Applicant :S 164 83 Stockholm Sweden
(72)**Name of Inventor :**
1)SUNDSTR–M Lars
2)ANDERSON Martin

(57) Abstract :
In one aspect the present invention exploits the termination conductances (18,22) of a time discrete harmonic mixer (10) as another degree of freedom in configuring the mixer (10) to meet given harmonic rejection performance requirements while using reduced number of unit cells (12). The values of these termination conductances (18 ,22) are purposefully configured to introduce a desired non linearity in quantization of the mixer transconductance by the unit cells (12). The non uniform quantization produces a non linear fitting of the transconductance levels to the transconductance points defining the target sinusoidal waveform. As a consequence of its termination conductance configuration the contemplated mixer (10) achieves levels of harmonic rejection with that would not be met if the reduced number of unit cells (12) operated with uniform quantization.As a further advantage the manipulated conductance values generally are lower than those used in conventional designs e.g. on par with the maximum conductance of the mixer (10) as provided by mixer s set of unit cells (12).

No. of Pages : 51 No. of Claims : 9

(12) PATENT APPLICATION PUBLICATION
(19) INDIA
(22) Date of filing of Application :15/10/2014
(21) Application No.8625/DELNP/2014 A
(43) Publication Date : 22/05/2015

(54) Title of the invention : ISFET ARRAY FOR DETECTING A SINGLE NUCLEOTIDE POLYMORPHISM

(51) International classification :G01N27/414,C12Q1/68
(31) Priority Document No :1205773.3
(32) Priority Date :30/03/2012
(33) Name of priority country :U.K.
(86) International Application No :PCT/GB2013/050715
Filing Date :19/03/2013
(87) International Publication No :WO 2013/144580
(61) Patent of Addition to Application Number :NA
Filing Date :NA
(62) Divisional to Application Number :NA
Filing Date :NA

(71)**Name of Applicant :**
1)GENE ONYX LIMITED
Address of Applicant :PO Box 3444 Portcullis Trustnet Chambers Road Town Tortola VIRGIN ISLANDS
(72)**Name of Inventor :**
1)SOHBATI Mohammadreza
2)SIM Calvin

(57) Abstract :
Apparatus comprising a module for detecting a single nucleotide polymorphism SNP within a genome and comprising: four reaction chambers for receiving a fluid sample the reaction chambers each containing a different one of the bases A C G T and a primer; a reference electrode which in use is immersed in said fluid sample; a pair of Ion Sensitive Field Effect Transistors ISFETs associated with each reaction chamber the ISFETs of each pair comprising respective sensing membranes or a common sensing membrane exposed within the associated reaction chamber; and a plurality of difference detectors each difference detector having a pair of inputs coupled respectively to outputs of ISFETs associated with different reaction chambers.

No. of Pages : 56 No. of Claims : 39

(12) PATENT APPLICATION PUBLICATION
(19) INDIA
(22) Date of filing of Application :13/08/2014
(21) Application No.6828/DELNP/2014 A
(43) Publication Date : 22/05/2015

(54) Title of the invention : ELEVATOR CONTROL SYSTEM

(51) International classification :B66B1/06,B66B1/46
(31) Priority Document No :NA
(32) Priority Date :NA
(33) Name of priority country :NA
(86) International Application No :PCT/US2012/026701
Filing Date :27/02/2012
(87) International Publication No :WO 2013/130032
(61) Patent of Addition to Application Number :NA
Filing Date :NA
(62) Divisional to Application Number :NA
Filing Date :NA

(71)**Name of Applicant :**
1)OTIS ELEVATOR COMPANY
Address of Applicant :Ten Farm Springs Road Farmington CT 06032 U.S.A.
(72)**Name of Inventor :**
1)ARMISTEAD Jason R.
2)CHRISTY Theresa M.

(57) Abstract :
An elevator control system including an elevator management system obtaining meeting information from at least one of a calendar system and a user interface; the elevator management system generating a control command in response to the meeting information; and an elevator controller controlling destinations of one or more elevator cars in response to the control command.

No. of Pages : 15 No. of Claims : 21

(12) PATENT APPLICATION PUBLICATION
(19) INDIA
(22) Date of filing of Application :13/08/2014
(21) Application No.6829/DELNP/2014 A
(43) Publication Date : 22/05/2015

(54) Title of the invention : MEDICAMENT DELIVERY DEVICES

(51) International classification :A61M15/00,G06M1/24
(31) Priority Document No :1201272.0
(32) Priority Date :26/01/2012
(33) Name of priority country :U.K.
(86) International Application No :PCT/GB2013/050101
Filing Date :17/01/2013
(87) International Publication No :WO 2013/110927
(61) Patent of Addition to Application Number :NA
Filing Date :NA
(62) Divisional to Application Number :NA
Filing Date :NA

(71)**Name of Applicant :**
1)INNOVATA BIOMED LIMITED
Address of Applicant :2nd Floor North Saltire Court 20 Castle Terrace Edinburgh EH1 2EN U.K.
(72)**Name of Inventor :**
1)PARKES Philip Carl

(57) Abstract :
A medicament delivery device (1) comprises an actuation mechanism by successive operation of which a predetermined number of unit doses of medicament can be dispensed. The device includes a locking mechanism for preventing further operation of the actuation mechanism after dispensing of said predetermined number of unit doses. The locking mechanism comprises a resilient member (51) a formation (18) with which the resilient member (51) is engageable to disable operation of the actuation mechanism and a barrier member (20) that prevents engagement of the resilient member (51) and the formation (18) until said predetermined number of unit doses has been dispensed. The device (1) may be a dry powder inhaler.

No. of Pages : 27 No. of Claims : 19

(12) PATENT APPLICATION PUBLICATION
(19) INDIA
(22) Date of filing of Application :13/08/2014
(21) Application No.6830/DELNP/2014 A
(43) Publication Date : 22/05/2015

(54) Title of the invention : PRESSURE MEASUREMENT SYSTEMS AND METHODS WITH MOISTURE VAPOR CONTROL

(51) International classification :A61G7/057
(31) Priority Document No :61/591158
(32) Priority Date :26/01/2012
(33) Name of priority country :U.S.A.
(86) International Application No :PCT/US2013/023136
Filing Date :25/01/2013
(87) International Publication No :WO 2013/112828
(61) Patent of Addition to Application Number :NA
Filing Date :NA
(62) Divisional to Application Number :NA
Filing Date :NA

(71)**Name of Applicant :**
1)HUNTLEIGH TECHNOLOGY LIMITED
Address of Applicant :Arjohuntleigh House Houghton Hall Business Park Houghton Regis Dunstable Bedfordshire LU5 5XF U.K.
(72)**Name of Inventor :**
1)NIEDERKROM Christopher
2)YOUNGDAHL John
3)VRZALIK John
4)BURGETT Julie

(57) Abstract :
A cover sheet (100) comprising: a spacer material (110) comprising an upper surface (115) and a lower surface (116) and a thickness (118) measured between them; a vapor permeable material (120) proximal to the upper surface (115) of the spacer material (110); and a pressure sensing mat (125) proximal to the lower surface (116) of the spacer material (110).

No. of Pages : 19 No. of Claims : 46

(12) PATENT APPLICATION PUBLICATION
(19) INDIA
(22) Date of filing of Application :13/08/2014
(21) Application No.6831/DELNP/2014 A
(43) Publication Date : 22/05/2015

(54) Title of the invention : METHOD OF PRODUCING A COMPOSITION CONTAINING GALACTO OLIGOSACCHARIDES

(51) International classification :C12P19/00,C12P19/04,C12P19/16
(31) Priority Document No :12152502.6
(32) Priority Date :25/01/2012
(33) Name of priority country :EPO
(86) International Application No :PCT/EP2013/051477
Filing Date :25/01/2013
(87) International Publication No :WO 2013/110778
(61) Patent of Addition to Application Number :NA
Filing Date :NA
(62) Divisional to Application Number :NA
Filing Date :NA

(71)**Name of Applicant :**
1)ARLA FOODS AMBA
Address of Applicant :S¸nderh¸j 14 DK 8260 Viby J Denmark
(72)**Name of Inventor :**
1)BERTELSEN Hans
2)WEJSE Peter Langborg
3)BUSCH Jon Weis

(57) Abstract :
The present invention relates to a method of producing compositions containing galacto oligosaccharides as well as to galacto oligosaccharide containing compositions as such.

No. of Pages : 89 No. of Claims : 22

(12) PATENT APPLICATION PUBLICATION
(19) INDIA
(22) Date of filing of Application :15/10/2014
(21) Application No.8630/DELNP/2014 A
(43) Publication Date : 22/05/2015

(54) Title of the invention : APPARATUS FOR ARRANGING TUBES FOR MANUFACTURING BLOOD COLLECTION TUBES

(51) International classification :G01N35/00,G01N33/49,A61B5/15
(31) Priority Document No :1020120028979
(32) Priority Date :21/03/2012
(33) Name of priority country :Republic of Korea
(86) International Application No :PCT/KR2013/002368
Filing Date :21/03/2013
(87) International Publication No :WO 2013/141636
(61) Patent of Addition to Application Number :NA
Filing Date :NA
(62) Divisional to Application Number :NA
Filing Date :NA

(71)**Name of Applicant :**
1)INDUSTRY FOUNDATION OF CHONNAM NATIONAL UNIVERSITY
Address of Applicant :77 Yongbong ro Buk gu Gwangju 500 757 Republic of Korea
(72)**Name of Inventor :**
1)WON Yong Gwan

(57) Abstract :
An apparatus for arranging tubes for manufacturing blood collection tubes according to the present invention comprises: a base frame; a tube supplying part disposed on the base frame for storing and supplying tubes which from the main body of the blood collection tubes; a cartridge supplying part for providing a cartridge having insertion holes for inserting tubes thereinto; a cartridge support part disposed adjacent to the tube supplying part for supporting and transporting the cartridge supplied by the cartridge supplying part; and a tube loading part for inserting the tubes into the insertion holes of the cartridge by pushing same the tubes being supplied by the tube supplying part and the cartridge being supported by the cartridge support part.

No. of Pages : 25 No. of Claims : 6

(12) PATENT APPLICATION PUBLICATION
(19) INDIA
(22) Date of filing of Application :15/10/2014
(21) Application No.8631/DELNP/2014 A
(43) Publication Date : 22/05/2015

(54) Title of the invention : PRODUCTION METHOD FOR BLOOD COLLECTING TUBE

(51) International classification :B67B3/24,B67B3/28,B65C3/12
(31) Priority Document No :1020120029265
(32) Priority Date :22/03/2012
(33) Name of priority country :Republic of Korea
(86) International Application No :PCT/KR2013/002386
Filing Date :22/03/2013
(87) International Publication No :WO 2013/141641
(61) Patent of Addition to Application Number :NA
Filing Date :NA
(62) Divisional to Application Number :NA
Filing Date :NA

(71)**Name of Applicant :**
1)INDUSTRY FOUNDATION OF CHONNAM NATIONAL UNIVERSITY
Address of Applicant :77 Yongbong ro Buk gu Gwangju 500 757 Republic of Korea
(72)**Name of Inventor :**
1)WON Yong Gwan

(57) Abstract :
According to the present invention a production method for a blood collecting tube comprises: a tube arranging process in which the occluding parts of tubes are inserted into a cartridge formed so as to have insertion holes oriented in rows and columns and opening parts in the tubes are arranged so as to face upwards; and a lid coupling process in which rubber packing and lids to which caps have been coupled are simultaneously coupled to the opening parts of the tubes arranged in the tube arranging process. The production method for a blood collecting tube according to the present invention allows equipment manufacture and design allowing improved automation of the preprocessing needed for the production of blood collecting tubes.

No. of Pages : 37 No. of Claims : 11

(12) PATENT APPLICATION PUBLICATION
(19) INDIA
(22) Date of filing of Application :12/08/2014
(21) Application No.6776/DELNP/2014 A
(43) Publication Date : 22/05/2015

(54) Title of the invention : TRANSAURAL SYNTHESIS METHOD FOR SOUND SPATIALIZATION

(51) International classification :H04S3/00
(31) Priority Document No :1251328
(32) Priority Date :13/02/2012
(33) Name of priority country :France
(86) International Application No :PCT/FR2013/050278
Filing Date :11/02/2013
(87) International Publication No :WO 2013/121136
(61) Patent of Addition to Application Number :NA
Filing Date :NA
(62) Divisional to Application Number :NA
Filing Date :NA

(71)**Name of Applicant :**
1)ROSSET Franck
Address of Applicant :5 rue du Chªne B 1000 Bruxelles Belgium
2)HAURAIS Jean Luc
(72)**Name of Inventor :**
1)ROSSET Franck
2)HAURAIS Jean Luc

(57) Abstract :
The present invention relates to a method for producing a digital spatialized stereo audio file from an original multichannel audio file characterized in that it comprises: a step of performing a processing on each of the channels for cross talk cancelation; a step of merging the channels in order to produce a stereo signal; and a dynamic filtering and specific equalization step for increasing the sound dynamics.

No. of Pages : 17 No. of Claims : 4

(12) PATENT APPLICATION PUBLICATION
(19) INDIA
(22) Date of filing of Application :14/10/2014
(21) Application No.8607/DELNP/2014 A
(43) Publication Date : 22/05/2015

(54) Title of the invention : CLAMPING RING

(51) International classification :F16L33/04,F16L21/06
(31) Priority Document No :1253413
(32) Priority Date :13/04/2012
(33) Name of priority country :France
(86) International Application No :PCT/FR2013/050770
Filing Date :10/04/2013
(87) International Publication No :WO 2013/153323
(61) Patent of Addition to Application Number :NA
Filing Date :NA
(62) Divisional to Application Number :NA
Filing Date :NA

(71)**Name of Applicant :**
1)ETABLISSEMENTS CAILLAU
Address of Applicant :28 rue Ernest Renan F 92130 Issy les Moulineaux France
(72)**Name of Inventor :**
1)RIGOLLET Nicolas
2)PREVOT Fabrice

(57) Abstract :
The invention relates to a ring which comprises a metal belt (10) a pair of projecting lugs (12, 14) an expander bolt (16) arranged in bores of said lugs and tightening members (16A,16B) engaging with said bolt and with the bearing portions of the lugs. At least one of the lugs of the pair is a lug with an extension (14) the bearing portion of which is formed as an extension (17) of said lug which is folded towards the rear of the latter and which comprises a bore for the expander bolt. The extension (17) and the front portion (15) of the lug with the extension (14) are connected by a strip portion (20) forming a linking loop defining an axial tunnel in which the two axial ends are open such that the inclination between the extension (17) and the front portion (15) of the lug can change when tightening the ring.

No. of Pages : 28 No. of Claims : 14

(12) PATENT APPLICATION PUBLICATION
(19) INDIA
(22) Date of filing of Application :14/10/2014
(21) Application No.8608/DELNP/2014 A
(43) Publication Date : 22/05/2015

(54) Title of the invention : CLEANING SYSTEM FOR DRUM CONVEYOR OF APPARATUS FOR FEEDING FILTER SEGMENTS TO MULTI SEGMENT FILTER MANUFACTURING APPARATUS AND METHOD OF CLEANING OF DRUM CONVEYOR

(51) International classification :A24D3/02
(31) Priority Document No :P.398616
(32) Priority Date :26/03/2012
(33) Name of priority country :Poland
(86) International Application No :PCT/PL2013/050008
Filing Date :13/03/2013
(87) International Publication No :WO 2013/147631
(61) Patent of Addition to Application Number :NA
Filing Date :NA
(62) Divisional to Application Number :NA
Filing Date :NA

(71)**Name of Applicant :**
1)INTERNATIONAL TOBACCO MACHINERY POLAND SP. Z O.O.
Address of Applicant :Warsztatowa 19A PL 26 600 Radom Poland
(72)**Name of Inventor :**
1)BOLESLAWSKI Andrzej

(57) Abstract :
The object of the application is a cleaning system of a drum conveyor of a filter segment feeding apparatus in the tobacco industry wherein a transport drum(3) comprises a plurality of discs (4) on the circumferential surface of which concavities (5) are formed whereas the concavities of the individual discs are positioned relative to one another so that together they form channels (6) receiving filter rods (1) where in the said channels(6) the filter rods (1) are transported during cutting whereas the borders of adjacent discs (4) do not contact one another and in this way they form circumferential grooves(9). The discs (4) have passages (12) discharging the dirt the circumferential grooves (9) have a connection with the passages (12) discharging the dirt and the system comprises a vacuum channel (15) receiving the dirt having a connection with the passages (12) discharging the dirt in the discs (4).

No. of Pages : 12 No. of Claims : 7

(12) PATENT APPLICATION PUBLICATION
(19) INDIA
(22) Date of filing of Application :14/10/2014
(21) Application No.8609/DELNP/2014 A
(43) Publication Date : 22/05/2015

(54) Title of the invention : TIRE HOLDING APPARATUS

(51) International classification :B29D30/08,G01M17/02
(31) Priority Document No :NA
(32) Priority Date :NA
(33) Name of priority country :NA
(86) International Application No :PCT/JP2012/069966
Filing Date :06/08/2012
(87) International Publication No :WO 2014/024242
(61) Patent of Addition to Application Number :NA
Filing Date :NA
(62) Divisional to Application Number :NA
Filing Date :NA

(71)**Name of Applicant :**
1)MITSUBISHI HEAVY INDUSTRIES MACHINERY TECHNOLOGY CORPORATION
Address of Applicant :6 22 Kan on Shin machi 4 chome Nishi ku Hiroshima shi Hiroshima 7338553 Japan
(72)**Name of Inventor :**
1)MATSUNAGA Kunio
2)TACHIBANA Makoto

(57) Abstract :
This tire holding apparatus holds a tire by means of an annular rim attached in such a manner as to be detachable and is provided with: a body part having a support surface for supporting the rim; an inflation gas supply part that has an inflation flow passage that leads from inside the body part to the center of the rim and supplies inflation gas to the inside of the tire supported by the rim; and clamp part that is attached to the body part and uses the pressure of the inflation gas which flows through the inflation flow passage as a driving force to clamp the rim to the support surface of the body part.

No. of Pages : 91 No. of Claims : 7

(12) PATENT APPLICATION PUBLICATION
(19) INDIA
(22) Date of filing of Application :14/10/2014
(21) Application No.8610/DELNP/2014 A
(43) Publication Date : 22/05/2015

(54) Title of the invention : PEPTIDES FOR MANAGEMENT OF LACTATION

(51) International classification :C07K5/10,C07K7/06,C07K14/47
(31) Priority Document No :61/612410
(32) Priority Date :19/03/2012
(33) Name of priority country :U.S.A.
(86) International Application No :PCT/IL2013/050214
Filing Date :08/03/2013
(87) International Publication No :WO 2013/140388
(61) Patent of Addition to Application Number :NA
Filing Date :NA
(62) Divisional to Application Number :NA
Filing Date :NA

(71)**Name of Applicant :**
1)MILEUTIS LTD.
Address of Applicant :P.O. Box 9139 7080000 Gan Yavne Israel
(72)**Name of Inventor :**
1)ISCOVICH Jose Mario
2)ISCOVICH Javier

(57) Abstract :
The present invention provides novel short peptides that are highly effective in inducing involution in a mammary gland of a lactating mammal and cessation of milk production by the gland. The invention further provides pharmaceutical composition comprising the peptides and methods of use thereof including for treating microbial infection in a mammary gland.

No. of Pages : 40 No. of Claims : 33

(12) PATENT APPLICATION PUBLICATION
(21) Application No.6816/DELNP/2014 A
(19) INDIA
(22) Date of filing of Application :13/08/2014
(43) Publication Date : 22/05/2015

(54) Title of the invention : MULTIPLE DOSE VIAL AND METHOD

(51) International classification :A61M5/178
(31) Priority Document No :61/587525
(32) Priority Date :17/01/2012
(33) Name of priority country :U.S.A.
(86) International Application No :PCT/US2013/021998
Filing Date :17/01/2013
(87) International Publication No :WO 2013/109794
(61) Patent of Addition to Application Number :NA
Filing Date :NA
(62) Divisional to Application Number :NA
Filing Date :NA

(71)**Name of Applicant :**
1)DR. PY INSTITUTE LLC
Address of Applicant :201 Housatonic Avenue New Milford CT 06776 U.S.A.
(72)**Name of Inventor :**
1)PY Daniel

(57) Abstract :
A vial for storing multiple doses of a substance to be dispensed into one or more syringes or other delivery devices. The vial has a body a variable volume storage chamber within the body for storing multiple doses of the substance therein and a one way valve connectable in fluid communication with a syringe or other delivery device. The one way valve is moveable relative to the body between first and second positions (i) one of which permits the valve to open so that substance from the variable volume storage chamber can flow therethrough and into the syringe or other delivery device connected in fluid communication therewith and (ii) one of which prevents the valve from opening.

No. of Pages : 70 No. of Claims : 62

(12) PATENT APPLICATION PUBLICATION
(19) INDIA
(22) Date of filing of Application :13/08/2014
(21) Application No.6817/DELNP/2014 A
(43) Publication Date : 22/05/2015

(54) Title of the invention : CHROMATOGRAPHIC MEDIA FOR STORAGE AND DELIVERY OF THERAPEUTIC BIOLOGICS AND SMALL MOLECULES

(51) International classification :A61K47/48,A61K47/30,A61K9/08
(31) Priority Document No :61/588312
(32) Priority Date :19/01/2012
(33) Name of priority country :U.S.A.
(86) International Application No :PCT/US2013/022057
Filing Date :18/01/2013
(87) International Publication No :WO 2013/109825
(61) Patent of Addition to Application Number :NA
Filing Date :NA
(62) Divisional to Application Number :NA
Filing Date :NA

(71)**Name of Applicant :**
1)NATRIX SEPARATIONS INC.
Address of Applicant :5295 John Lucas Drive Unit 6 Burlington ON L7L 6A8 Canada
(72)**Name of Inventor :**
1)CHICKOSKY John A.
2)HONEYMAN Charles H.
3)MCGLAUGHLIN Molly S.
4)RAGHEB Amro

(57) Abstract :
Described are composite materials and methods of making and using them for the storage and delivery of unstable drugs or biologies. In certain embodiments the composite material comprises a support member comprising a plurality of pores extending through the support member; a macroporous cross linked gel comprising a plurality of macropores; a therapeutic agent; and a stabilizing agent.

No. of Pages : 66 No. of Claims : 29

(12) PATENT APPLICATION PUBLICATION
(21) Application No.6818/DELNP/2014 A
(19) INDIA
(22) Date of filing of Application :13/08/2014
(43) Publication Date : 22/05/2015

(54) Title of the invention : CARTON BOX WITH HAND HOLES AND SPACER PANEL TO FACILITATE LIFTING AND CARRYING THE BOX

(51) International classification :B65D5/468,B65D5/50
(31) Priority Document No :61/599600
(32) Priority Date :16/02/2012
(33) Name of priority country :U.S.A.
(86) International Application No :PCT/US2013/026404
Filing Date :15/02/2013
(87) International Publication No :WO 2013/123370
(61) Patent of Addition to Application Number :NA
Filing Date :NA
(62) Divisional to Application Number :NA
Filing Date :NA

(71)**Name of Applicant :**
1)INTERNATIONAL PAPER COMPANY
Address of Applicant :6400 Poplar Avenue Memphis TN 38197 U.S.A.
(72)**Name of Inventor :**
1)FABER Richard D.
2)BUSS Kenneth
3)BEVIER Alex D.
4)JAMBOIS Brian K.
5)ROBERTS ADAM P.

(57) Abstract :
A carton (10) has hand holes (30 31) in opposite walls (12 13) and a spacer panel (40) inserted between stacked articles in the carton. The spacer panel has cut outs (41) in its opposite ends positioned behind the hand holes to provide space for inserting the fingers. The hand holes (30 31) and spacer panel (40) facilitate lifting carrying and manipulating the carton (10). The spacer panel (40) has width and length dimensions to fit within the interior width and length dimensions of the carton (10) and reinforces the carton (10) to reduce damage when the carton (10) is dropped.

No. of Pages : 20 No. of Claims : 14

(12) PATENT APPLICATION PUBLICATION
(21) Application No.8/DELNP/2015 A
(19) INDIA
(22) Date of filing of Application :01/01/2015
(43) Publication Date : 22/05/2015

(54) Title of the invention : METHODS AND DEVICES TO REDUCE DAMAGING EFFECTS OF CONCUSSIVE OR BLAST FORCES ON A SUBJECT

(51) International classification	:A41D13/05,A61B5/021,A61B5/022
(31) Priority Document No	:PCT/US11/55783
(32) Priority Date	:11/10/2011
(33) Name of priority country	:U.S.A.
(86) International Application No	:PCT/US2012/040985
Filing Date	:06/06/2012
(87) International Publication No	:WO 2013/055409
(61) Patent of Addition to Application Number	:NA
Filing Date	:NA
(62) Divisional to Application Number	:NA
Filing Date	:NA

(71)**Name of Applicant :**
1)TBI INNOVATIONS LLC
Address of Applicant :1080 University Blvd. Richmond IN 47374 U.S.A.
(72)**Name of Inventor :**
1)SMITH David

(57) Abstract :
A method for reducing the damaging effects of a blast or concussive event includes applying pressure to at least one jugular vein to reduce the egress of blood from the cranial cavity during the incidence of the concussive event. Reducing blood out flow from the cranial cavity increases intracranial pressure of the cerebrospinal fluid to reduce the risk of traumatic brain injury and injuries to the spinal column. Reducing blood out flow further increases the intracranial pressure and thereby increases the pressure of the cochlear fluid the vitreous humor and the cerebrospinal fluid to thereby reduce the risk of injury to the inner ear internal structure of the eye and the spinal column. In addition increasing intracranial pressure reduces the likelihood of brain injury and any associated loss of olfactory function.

No. of Pages : 41 No. of Claims : 26

(12) PATENT APPLICATION PUBLICATION
(19) INDIA
(22) Date of filing of Application :15/10/2014
(21) Application No.8646/DELNP/2014 A
(43) Publication Date : 22/05/2015

(54) Title of the invention : IGNITION UNIT FOR TURBOJET ENGINE

(51) International classification :F02C7/266,F02P15/00,F02P15/02
(31) Priority Document No :1252648
(32) Priority Date :23/03/2012
(33) Name of priority country :France
(86) International Application No :PCT/EP2013/056119
Filing Date :22/03/2013
(87) International Publication No :WO 2013/139974
(61) Patent of Addition to Application Number :NA
Filing Date :NA
(62) Divisional to Application Number :NA
Filing Date :NA

(71)**Name of Applicant :**
1)SNECMA
Address of Applicant :2 boulevard du Gnral Martial Valin F 75015 Paris France
(72)**Name of Inventor :**
1)SCHAEFFER Christian
2)STIFANIC David Gino
3)BOEDOT Bertrand

(57) Abstract :
The invention relates to an ignition unit (200) for a turbojet engine said unit comprising: an electrical power supply (201) a single control channel (202) to receive a control signal from a computer a main sparkplug ignition channel (210) to energize at least one main sparkplug of a main combustion chamber and an afterburner sparkplug ignition channel (220) to energize at least one afterburner sparkplug of an afterburner chamber said unit being able in response to pulsed controls on said single control channel (202) to selectively activate the main sparkplug ignition channel (210) or the afterburner sparkplug ignition channel (220).

No. of Pages : 23 No. of Claims : 9

(12) PATENT APPLICATION PUBLICATION
(19) INDIA
(22) Date of filing of Application :14/08/2014
(21) Application No.6864/DELNP/2014 A
(43) Publication Date : 22/05/2015

(54) Title of the invention : LEVER TYPE CONNECTOR

(51) International classification :H01R13/629
(31) Priority Document No :2012047865
(32) Priority Date :05/03/2012
(33) Name of priority country :Japan
(86) International Application No :PCT/JP2013/001273
Filing Date :01/03/2013
(87) International Publication No :WO 2013/132808
(61) Patent of Addition to Application Number :NA
Filing Date :NA
(62) Divisional to Application Number :NA
Filing Date :NA

(71)**Name of Applicant :**
1)TYCO ELECTRONICS JAPAN G.K.
Address of Applicant :3 5 8 Hisamoto Takatsu ku Kawasaki shi Kanagawa 2138535 Japan
(72)**Name of Inventor :**
1)SHIGA Katsumi

(57) Abstract :
A lever type connector (1) is provided with a housing (20) a lever (30) and a locking mechanism (LK) that is provided on the housing (20) and the lever (30) and locks a connecting beam (32) of the lever (30) in a final position. The locking mechanism (LK) is provided with the following: a housing side locking arm (40) provided on the housing (20); a lever side lock release arm (50) provided on the lever (30); and a locking block (56) provided on the lever (30). The lever side lock release arm (50) is located in a release arm chamber (100) that passes completely through the thickness of the abovementioned connecting beam (32).

No. of Pages : 28 No. of Claims : 2

(12) PATENT APPLICATION PUBLICATION
(21) Application No.6865/DELNP/2014 A
(19) INDIA
(22) Date of filing of Application :14/08/2014
(43) Publication Date : 22/05/2015

(54) Title of the invention : HAIR CONDITIONING COMPOSITION FOR PERMANENT AND SEMI PERMANENT HAIR COLORATION APPLICATIONS

(51) International classification :A61K8/64,A61Q5/12
(31) Priority Document No :12161349.1
(32) Priority Date :26/03/2012
(33) Name of priority country :EPO
(86) International Application No :PCT/EP2013/056021
Filing Date :22/03/2013
(87) International Publication No :WO 2013/143989
(61) Patent of Addition to Application Number :NA
Filing Date :NA
(62) Divisional to Application Number :NA
Filing Date :NA

(71)**Name of Applicant :**
1)OTC GMBH
Address of Applicant :Brammenring 11 46047 Oberhausen Germany
(72)**Name of Inventor :**
1)DAHMS Gerd Herbert

(57) Abstract :
The invention concerns a hair conditioning composition for permanent and semi permanent hair color applications characterized in that the hair conditioning composition comprises a solvent; a water soluble oligo peptide from a natural proteinous raw material source containing Sulfur; alkaline or alkaline earth metal ions; a multidentate ligand or chelating agent and optionally a redox active inorganic or organic component.

No. of Pages : 26 No. of Claims : 15

(12) PATENT APPLICATION PUBLICATION
(19) INDIA
(22) Date of filing of Application :14/08/2014
(21) Application No.6866/DELNP/2014 A
(43) Publication Date : 22/05/2015

(54) Title of the invention : NOVEL PHOTOIMMUNOCONJUGATES FOR USE IN PHOTODYNAMIC THERAPY

(51) International classification :A61K47/48,A61K41/00
(31) Priority Document No :NA
(32) Priority Date : -
(33) Name of priority country :
(86) International Application No :PCT/EP2012/055022
Filing Date :21/03/2012
(87) International Publication No :WO 2013/139391
(61) Patent of Addition to Application Number :NA
Filing Date :NA
(62) Divisional to Application Number :NA
Filing Date :NA

(71)**Name of Applicant :**
1)FRAUNHOFER GESELLSCHAFT ZUR F–RDERUNG DER ANGEWANDTEN FORSCHUNG E.V.
Address of Applicant :Hansastr. 27c 80686 Munich Germany
2)Rheinisch Westflische Technische Hochschule Aachen
(72)**Name of Inventor :**
1)BARTH Stefan
2)TUR Mehmet Kemal
3)HUSSAIN Ahmad

(57) Abstract :
A compound comprising : a photosensitizer covalently coupled to a protein selected from the group consisting of antibodies or their derivatives or fragments thereof synthetic peptides such as scFv mimotopes which bind CD antigens cytokine receptors interleukin receptors hormone receptors growth factor receptors more particularly tyrosine kinase growth factor receptor of the ErbB family wherein the photosensitizer is coupled to the binding protein via 06 alkylguanine DNA alkyltransferase (hAGTm) a modified human DNA repair protein.

No. of Pages : 35 No. of Claims : 19

(12) PATENT APPLICATION PUBLICATION
(21) Application No.8651/DELNP/2014 A
(19) INDIA
(22) Date of filing of Application :16/10/2014
(43) Publication Date : 22/05/2015

(54) Title of the invention : SCREW ADJUSTABLE CONNECTOR APPARATUS FOR TELESCOPED WEAR AND SUPPORT MEMBERS

(51) International classification :E02F9/28
(31) Priority Document No :61/613748
(32) Priority Date :21/03/2012
(33) Name of priority country :U.S.A.
(86) International Application No :PCT/US2013/030342
Filing Date :12/03/2013
(87) International Publication No :WO 2013/142132
(61) Patent of Addition to Application Number :NA
Filing Date :NA
(62) Divisional to Application Number :NA
Filing Date :NA

(71)**Name of Applicant :**
1)HENSLEY INDUSTRIES INC.
Address of Applicant :2108 Joe Field Road Dallas Texas 75229 U.S.A.
(72)**Name of Inventor :**
1)CAMPOMANES Patrick

(57) Abstract :
An earth engaging wear member is rearwardly telescoped onto a support member and is releasably retained thereon by specially designed connector apparatus extending through aligned connector openings in the wear and support members. The connector apparatus includes a spool member rearwardly bearing against the wear member a shim member forwardly spaced apart from the spool member and having a sloping rear surface and a wedge screw member interposed between the spool and shim members. The wedge screw member has a non tapered body threadingly engaging the spool member side portion and a non threaded radially sloped surface area rampingly engaging the sloped shim surface area. Threaded advancement of the wedge screw member rearwardly moves the wear member relative to the support member to tighten an operationally created loosened interfit therebetween.

No. of Pages : 19 No. of Claims : 20

(12) PATENT APPLICATION PUBLICATION
(19) INDIA
(22) Date of filing of Application :16/10/2014
(21) Application No.8652/DELNP/2014 A
(43) Publication Date : 22/05/2015

(54) Title of the invention : FLOATING FLOOR SYSTEM FLOOR PANEL AND INSTALLATION METHOD FOR THE SAME

(51) International classification :E04F15/02,E04F15/10
(31) Priority Document No :61/623670
(32) Priority Date :13/04/2012
(33) Name of priority country :U.S.A.
(86) International Application No :PCT/US2013/036663
Filing Date :15/04/2013
(87) International Publication No :WO 2013/155534
(61) Patent of Addition to Application Number :NA
Filing Date :NA
(62) Divisional to Application Number :NA
Filing Date :NA

(71)**Name of Applicant :**
1)ARMSTRONG WORLD INDUSTRIES INC.
Address of Applicant :2500 Columbia Avenue Lancaster PA 17603 U.S.A.
(72)**Name of Inventor :**
1)RAMACHANDRA Sunil
2)TOTARO Anna J.

(57) Abstract :
A floating floor system and a floor panel and method for use with the same that includes a snap fit locking assembly that provides vertical locking between vadjacent floor panels to minimize and/or prevent ledglng therebetween. In one embodiment a protuberance and a recess are also provide on the floor panels to provide horizontal locking. The snap fit locking assembly comprises: a locking member protruding from a first flange and comprising an undercut surface; and a locking slot formed In a second flange. The snap fit locking assembly is configured so that when the locking member of a first one of the panels is disposed within the locking slot of a second one of the panels the first and second panels are vertically locked together via mechanical interaction between the undercut surface of the locking member of the first panel and a locking surface of the second flange of the second panel

No. of Pages : 39 No. of Claims : 59

(12) PATENT APPLICATION PUBLICATION
(19) INDIA
(22) Date of filing of Application :14/08/2014
(21) Application No.6856/DELNP/2014 A
(43) Publication Date : 22/05/2015

(54) Title of the invention : INSTALLATION AND METHOD FOR DRYING EARTHENWARE PRODUCTS

(51) International classification :F26B15/14,F26B25/00
(31) Priority Document No :1253732
(32) Priority Date :24/04/2012
(33) Name of priority country :France
(86) International Application No :PCT/FR2013/050890
Filing Date :22/04/2013
(87) International Publication No :WO 2013/160600
(61) Patent of Addition to Application Number :NA
Filing Date :NA
(62) Divisional to Application Number :NA
Filing Date :NA

(71)**Name of Applicant :**
1)CLEIA
Address of Applicant :2 Avenue Eug¨ne Spuller F 21340 Nolay France
(72)**Name of Inventor :**
1)PEAUDECERF Michel
2)BOISSINVAL Jean Claude
3)BIGEARD Franck

(57) Abstract :
The present invention relates to an installation for drying earthenware products using a stream of drying air the installation comprising a dryer and at least one framework (4) on which at least one said product is placed the dryer comprising an inlet (10) via which the framework (4) bearing the product enters and an exit (30) via which the framework with the dried product exits at least one out bound channel (12) and a return channel which are parallel to one another each channel having at least one path means for driving the framework so that it passes in succession through the inlet (10) along the outbound channel (12) along the return channel and the exit (30) means for blowing a stream of drying air counter current wise against the path of the framework. The inlet (10) comprises a doorless lock chamber (11) having at least a first wall and a second wall which collaborate with at least two plates (42 43) mounted on the framework (4) to encourage sealing at the entrance to the dryer.

No. of Pages : 39 No. of Claims : 8

(12) PATENT APPLICATION PUBLICATION
(19) INDIA
(22) Date of filing of Application :15/10/2014
(21) Application No.8640/DELNP/2014 A
(43) Publication Date : 22/05/2015

(54) Title of the invention : VEHICLE CONTROL DEVICE

(51) International classification :B60W10/08,B60K6/442,B60K6/445
(31) Priority Document No :NA
(32) Priority Date :NA
(33) Name of priority country :NA
(86) International Application No :PCT/JP2012/057823
Filing Date :26/03/2012
(87) International Publication No :WO 2013/145104
(61) Patent of Addition to Application Number :NA
Filing Date :NA
(62) Divisional to Application Number :NA
Filing Date :NA

(71)**Name of Applicant :**
1)TOYOTA JIDOSHA KABUSHIKI KAISHA
Address of Applicant :1 Toyota cho Toyota shi Aichi 4718571 Japan
(72)**Name of Inventor :**
1)IMAI Keita
2)IMAMURA Tatsuya
3)OKUDA Kouichi
4)MATSUBARA Tooru
5)KITAHATA Takeshi
6)KUMAZAKI Kenta
7)HIASA Yasuhiro
8)KATO Shunya
9)TABATA Atsushi

(57) Abstract :
The frequency of engine startup shock when an engine is started from motor travel by two motors is suppressed. Because two motor EV travel is selected in a state such that the charge capacity (SOC) of an electric storage device (52) is higher than one motor EV travel the time taken to switch to engine travel after the transition to two motor EV travel (i.e. the time taken for the engine to start up) is longer. During this time when the opportunity arises to transition to one motor EV travel measures such as those for starting up the engine from one motor EV travel become possible and the switch itself from two motor EV travel to engine travel is difficult to initiate. Considering alternatives two motor EV travel is not selected or specifically it is difficult to transition to two motor EV travel with a low charge capacity (SOC) such that the switch to engine travel is made comparatively soon after the transition to two motor EV travel and the switch itself from two motor EV travel to engine travel is therefore difficult to initiate.

No. of Pages : 45 No. of Claims : 9

(12) PATENT APPLICATION PUBLICATION
(19) INDIA
(22) Date of filing of Application :15/10/2014

(21) Application No.8641/DELNP/2014 A
(43) Publication Date : 22/05/2015

(54) Title of the invention : GEMSTONE INSPECTION

(51) International classification	:B07C5/342,G01N21/87,B07C5/38
(31) Priority Document No	:1204680.1
(32) Priority Date	:16/03/2012
(33) Name of priority country	:U.K.
(86) International Application No	:PCT/EP2013/055165
Filing Date	:13/03/2013
(87) International Publication No	:WO 2013/135781
(61) Patent of Addition to Application Number	:NA
Filing Date	:NA
(62) Divisional to Application Number	:NA
Filing Date	:NA

(71)**Name of Applicant :**
1)DE BEERS CENTENARY AG
Address of Applicant :Alpenstrasse 5 CH 6000 Lucerne 6 Switzerland
(72)**Name of Inventor :**
1)SMITH James Gordon Charters
2)LEATON Timothy Howard

(57) Abstract :
There is described an apparatus and method for inspecting and optionally sorting gemstones. The apparatus includes a nozzle or array of nozzles operatively connected to a vacuum pump such that a gemstone located generally underneath one of the nozzles will be supported against that nozzle by air pressure when a vacuum is applied above the nozzle. A drive system moves the nozzles along a path past a gemstone pick up location so that a gemstone can be picked up by each nozzle as that nozzle passes the pick up location. One or more measurement devices are located on or near the predetermined path and configured to measure at least one property of the gemstone. One or more ejection locations are provided on the path at which the vacuum applied to each nozzle is reversible to eject the gemstone from that nozzle. The apparatus may also include a plurality of dispensing bins into which the gemstones are dispensed. The bin into which each gemstone is dispensed is chosen in dependence on the measured property.

No. of Pages : 33 No. of Claims : 38

(12) PATENT APPLICATION PUBLICATION
(21) Application No.8643/DELNP/2014 A
(19) INDIA
(22) Date of filing of Application :15/10/2014
(43) Publication Date : 22/05/2015

(54) Title of the invention : METHODS FOR OBTAINING LIQUID FROM A SOLID PHASE

(51) International classification :C12N15/10
(31) Priority Document No :1204663.7
(32) Priority Date :16/03/2012
(33) Name of priority country :U.K.
(86) International Application No :PCT/GB2013/050653
Filing Date :15/03/2013
(87) International Publication No :WO 2013/136083
(61) Patent of Addition to Application Number :NA
Filing Date :NA
(62) Divisional to Application Number :NA
Filing Date :NA

(71)**Name of Applicant :**
1)CAMBRIDGE ENTERPRISE LIMITED
Address of Applicant :The Old Schools Trinity Lane Cambridge Cambridgeshire CB2 1TN U.K.
(72)**Name of Inventor :**
1)CHUA Yii Leng

(57) Abstract :
A method for obtaining a liquid from a porous solid phase is described. The method comprises forming a liquid seal at a first end of a porous solid phase to which a liquid is bound wherein liquid of the liquid seal is immiscible with the liquid bound to the solid phase and applying a pressure differential across the porous solid phase to cause the immiscible liquid to move through the porous solid phase towards a second end of the porous solid phase thereby displacing the liquid bound to the porous solid phase towards the second end and releasing this liquid from the second end. Recovery of liquid from the solid phase using such methods is increased compared with corresponding methods in which no liquid seal is formed. In preferred embodiments the liquid used to form the liquid seal is a mineral oil. The methods have particular application in nucleic acid extractions which utilise capture of nucleic acid to a solid phase. Kits and apparatus for performing the methods are also described.

No. of Pages : 26 No. of Claims : 25

(12) PATENT APPLICATION PUBLICATION
(19) INDIA
(22) Date of filing of Application :14/08/2014
(21) Application No.6879/DELNP/2014 A
(43) Publication Date : 22/05/2015

(54) Title of the invention : IMPROVED LUBRICANT SYSTEM FOR USE IN POWDER METALLURGY

(51) International classification :B22F1/00,C22C33/02
(31) Priority Document No :61/602748
(32) Priority Date :24/02/2012
(33) Name of priority country :U.S.A.
(86) International Application No :PCT/US2013/027213
Filing Date :22/02/2013
(87) International Publication No :WO 2013/126623
(61) Patent of Addition to Application Number :NA
Filing Date :NA
(62) Divisional to Application Number :NA
Filing Date :NA

(71)**Name of Applicant :**
1)HOEGANAES CORPORATION
Address of Applicant :1001 Talyors Lane Cinnaminson NJ 08077 U.S.A.
(72)**Name of Inventor :**
1)HANEJKO Francis G.
2)TAMBUSSI William

(57) Abstract :
The present invention is directed to metallurgical powder compositions having improved lubricant properties. These compositions of the invention include at least 90 wt.% of an iron based metallurgical powder; a Group 1 or Group 2 metal stearate; a first wax having a melting range of between about 80 and 100 °C; a second wax having a melting range of between about 80 and 90 °C; inc phosphate; boric acid; acetic acid; phosphoric acid; and polyvinylpyrrolidone. Methods of compacting the compositions as well as compacted articles prepared using those methods are also described.

No. of Pages : 20 No. of Claims : 33

(12) PATENT APPLICATION PUBLICATION
(19) INDIA
(22) Date of filing of Application :14/08/2014
(21) Application No.6880/DELNP/2014 A
(43) Publication Date : 22/05/2015

(54) Title of the invention : SOFA WITH SHIPPING AND USE CONFIGURATIONS

(51) International classification :A47C17/04,A47C17/165
(31) Priority Document No :61/591877
(32) Priority Date :28/01/2012
(33) Name of priority country :U.S.A.
(86) International Application No :PCT/US2013/023481
Filing Date :28/01/2013
(87) International Publication No :WO 2013/113019
(61) Patent of Addition to Application Number :NA
Filing Date :NA
(62) Divisional to Application Number :NA
Filing Date :NA

(71)**Name of Applicant :**
1)ASHLEY FURNITURE INDUSTRIES INC.
Address of Applicant :One Ashley Way Arcadia WI 54612 U.S.A.
(72)**Name of Inventor :**
1)WANG Walter

(57) Abstract :
A ready to assemble or knockdown sofa having a back rest that can be reconfigured between a use configuration in which the sofa is has a conventional L shaped cross section and a shipping or storage configuration in which the sofa is arranged in a more efficiently stacked rectangular cross section. The rectangular cross section allows the sofa to be more efficiently stacked with other sofas during shipping or storage. The back rest has an upper back rest portion and a lower back rest portion in which the upper back rest portion can be rotated forward toward the front of the sofa and downwardly into a nesting region against the top of the seat base to provide a more efficient shape.

No. of Pages : 22 No. of Claims : 27

(12) PATENT APPLICATION PUBLICATION
(19) INDIA
(22) Date of filing of Application :14/08/2014
(21) Application No.6881/DELNP/2014 A
(43) Publication Date : 22/05/2015

(54) Title of the invention : METHOD FOR DISPERSING AND AGGREGATING COMPONENTS OF MINERAL SLURRIES

(51) International classification :C02F1/28
(31) Priority Document No :61/590489
(32) Priority Date :25/01/2012
(33) Name of priority country :U.S.A.
(86) International Application No :PCT/US2013/022459
Filing Date :22/01/2013
(87) International Publication No :WO 2013/112430
(61) Patent of Addition to Application Number :NA
Filing Date :NA
(62) Divisional to Application Number :NA
Filing Date :NA

(71)**Name of Applicant :**
1)SORTWELL &CO.
Address of Applicant :103 Gleneagles St. Simons Island Georgia 31522 U.S.A.
(72)**Name of Inventor :**
1)SORTWELL Edwin T.

(57) Abstract :
The disclosure relates generally to the use of low molecular weight polymers to aggregate mineral components in aqueous mineral slurries to release and separate individual components of the slurry which may then be recovered from the slurry.

No. of Pages : 24 No. of Claims : 59

(12) PATENT APPLICATION PUBLICATION
(19) INDIA
(22) Date of filing of Application :16/10/2014
(21) Application No.8665/DELNP/2014 A
(43) Publication Date : 22/05/2015

(54) Title of the invention : INFORMATION PROCESSING DEVICE INFORMATION PROCESSING METHOD AND PROGRAM

(51) International classification :G01C21/36,G01C21/00,G08G1/005
(31) Priority Document No :2012097277
(32) Priority Date :23/04/2012
(33) Name of priority country :Japan
(86) International Application No :PCT/JP2013/056909
Filing Date :13/03/2013
(87) International Publication No :WO 2013/161416
(61) Patent of Addition to Application Number :NA
Filing Date :NA
(62) Divisional to Application Number :NA
Filing Date :NA

(71)**Name of Applicant :**
1)SONY CORPORATION
Address of Applicant :1 7 1 Konan Minato ku Tokyo 1080075 Japan
(72)**Name of Inventor :**
1)SUZUKI Toshikazu

(57) Abstract :
To provide an information processing device information processing method and program capable of easily displaying other maps relating to a geographical point on a map. [Solution] In the present invention an information processing device has a display control unit for displaying a first map and an operation detection unit that detects a first operation that selects a first geographical point on the first map. In a case where the first manipulation is detected the display control unit displays instead of the first map a second map corresponding to the first geographical point selected.

No. of Pages : 45 No. of Claims : 19

(12) PATENT APPLICATION PUBLICATION
(19) INDIA
(22) Date of filing of Application :16/10/2014
(21) Application No.8666/DELNP/2014 A
(43) Publication Date : 22/05/2015

(54) Title of the invention : MEDICATION DISPENSERS

(51) International classification :A61J7/04,A61J1/03,B65D83/04
(31) Priority Document No :61/636099
(32) Priority Date :20/04/2012
(33) Name of priority country :U.S.A.
(86) International Application No :PCT/US2013/036890
Filing Date :17/04/2013
(87) International Publication No :WO 2013/158712
(61) Patent of Addition to Application Number :NA
Filing Date :NA
(62) Divisional to Application Number :NA
Filing Date :NA

(71)**Name of Applicant :**
1)SMITHS MEDICAL ASD INC.
Address of Applicant :160 Weymouth Street Rockland MA 02370 U.S.A.
(72)**Name of Inventor :**
1)BLOMQUIST Michael L.
2)ADAMS Grant A.
3)LACY Christopher A.

(57) Abstract :
An embodiment of a medication dispenser comprises a drug pump having a control module. A medication dose request device can be in communication with the drug pump. A dispensing device for dispensing substantially solid medication in response to activation of the medication dose request device can be in communication with the drug pump.

No. of Pages : 33 No. of Claims : 14

(12) PATENT APPLICATION PUBLICATION
(19) INDIA
(22) Date of filing of Application :16/10/2014
(21) Application No.8668/DELNP/2014 A
(43) Publication Date : 22/05/2015

(54) Title of the invention : HYDROGENATION OF NITRILE RUBBER

(51) International classification :C08C19/02,C08L15/00,C08F4/54
(31) Priority Document No :PCT/CN2012/074935
(32) Priority Date :28/04/2012
(33) Name of priority country :China
(86) International Application No :PCT/EP2013/058802
Filing Date :26/04/2013
(87) International Publication No :WO 2013/160470
(61) Patent of Addition to Application Number :NA
Filing Date :NA
(62) Divisional to Application Number :NA
Filing Date :NA

(71)**Name of Applicant :**
1)LANXESS DEUTSCHLAND GMBH
Address of Applicant :Kennedyplatz 1 50569 Kln Germany
(72)**Name of Inventor :**
1)LIU Qingchun
2)WEI Zhenli
3)HOCH Martin

(57) Abstract :
This invention relates to a novel process for selectively hydrogenating nitrile rubbers in the presence of specific Ruthenium based complex catalysts without simultaneous molecular weight degradation by a metathetic reaction.

No. of Pages : 57 No. of Claims : 17

(12) PATENT APPLICATION PUBLICATION
(21) Application No.6794/DELNP/2014 A
(19) INDIA
(22) Date of filing of Application :13/08/2014
(43) Publication Date : 22/05/2015

(54) Title of the invention : INJECTING DEVICE WITH DOSE RESETTING MECHANISM

(51) International classification :A61M5/315,A61M5/20
(31) Priority Document No :PL398051
(32) Priority Date :08/02/2012
(33) Name of priority country :Poland
(86) International Application No :PCT/PL2013/050003
Filing Date :07/02/2013
(87) International Publication No :WO 2013/119132
(61) Patent of Addition to Application Number :NA
Filing Date :NA
(62) Divisional to Application Number :NA
Filing Date :NA

(71)**Name of Applicant :**
1)COPERNICUS SP. Z O.O.
Address of Applicant :ul. Litewska 10a PL 71 344 Szczecin Poland
(72)**Name of Inventor :**
1)STEFANSKI Adam

(57) Abstract :
Injecting device with dose resetting mechanism enables release energy accumulated in spring means (17) and causes automatically the back movement of an indicating element (16) to its initial position without causing any axial movement of a threaded piston rod (10) said actions being initiated by one movement of a dose setting element (4) in the direction opposite to that when setting a dose. Reset clutch (13) is made as an axially sliding shaped coupling element moved by means of the dose setting element (4) and moreover this reset clutch (13) is functionally connected with a drive unit destined to co operate with the spring means (17) in such a way that when this reset clutch (13) is released said drive unit is disconnected from the spring means (17) retaining the connection of this spring means (17) with the indicating element (16).

No. of Pages : 40 No. of Claims : 20

(12) PATENT APPLICATION PUBLICATION
(19) INDIA
(22) Date of filing of Application :13/08/2014
(21) Application No.6795/DELNP/2014 A
(43) Publication Date : 22/05/2015

(54) Title of the invention : ANALYSIS OF MEASUREMENTS OF A POLYMER

(51) International classification :C12Q1/68,B82Y15/00,G01N33/487
(31) Priority Document No :61/599573
(32) Priority Date :16/02/2012
(33) Name of priority country :U.S.A.
(86) International Application No :PCT/GB2013/050381
Filing Date :18/02/2013
(87) International Publication No :WO 2013/121224
(61) Patent of Addition to Application Number :NA
Filing Date :NA
(62) Divisional to Application Number :NA
Filing Date :NA

(71)**Name of Applicant :**
1)OXFORD NANOPORE TECHNOLOGIES LIMITED
Address of Applicant :Oxford Nanopore Technologies Limited Edmund Cartwright House 4 Robert Robinson Avenue Oxford Science Park Oxford Oxfordshire OX4 4GA U.K.
(72)**Name of Inventor :**
1)REID Stuart William
2)CLARKE James Anthony
3)WHITE James
4)HARPER Gavin

(57) Abstract :
A time ordered series of measurements of a polymer made during translocation of the polymer through a nanopore are analysed. The measurements are dependent on the identity of k mers in the nanopore a k mer being k polymer units of the polymer where k is a positive integer. The method involves deriving from the series of measurements a feature vector of time ordered features representing characteristics of the measurements; and determining similarity between the derived feature vector and at least one other feature vector.

No. of Pages : 106 No. of Claims : 38

(12) PATENT APPLICATION PUBLICATION
(19) INDIA
(22) Date of filing of Application :13/08/2014

(21) Application No.6796/DELNP/2014 A
(43) Publication Date : 22/05/2015

(54) Title of the invention : APTAMER METHOD

(51) International classification	:G01N33/487,G01N33/53,G01N33/543
(31) Priority Document No	:61/599240
(32) Priority Date	:15/02/2012
(33) Name of priority country	:U.S.A.
(86) International Application No	:PCT/GB2013/050348
Filing Date	:14/02/2013
(87) International Publication No	:WO 2013/121201
(61) Patent of Addition to Application Number	:NA
Filing Date	:NA
(62) Divisional to Application Number	:NA
Filing Date	:NA

(71)**Name of Applicant :**
1)OXFORD NANOPORE TECHNOLOGIES LIMITED
Address of Applicant :Edmund Cartwright House 4 Robert Robinson Avenue Oxford Science Park Oxford Oxfordshire OX4 4GA U.K.
(72)**Name of Inventor :**
1)TURNER Daniel John
2)FORDHAM Daniel George
3)GILL Roger Charles
4)BROWN Clive Gavin
5)REID Stuart
6)CLARKE James Anthony
7)WHITE James

(57) Abstract :
The invention relates to a new method of determining in a sample the presence or absence of one or more analyte members of a group of two or more analytes. The invention therefore relates to a multiplex assay for determining the presence or absence of each analyte in a group of multiple analytes. The assay uses aptamers and transmembrane pores.

No. of Pages : 88 No. of Claims : 43

(12) PATENT APPLICATION PUBLICATION
(19) INDIA
(22) Date of filing of Application :13/08/2014
(21) Application No.6797/DELNP/2014 A
(43) Publication Date : 22/05/2015

(54) Title of the invention : APPARATUS COMPRISING AN ARRAY OF SENSOR WELLS AND AN ARRAY OF FLOW CONTROL WELLS FOR IMPROVING THE WETTABILITY AND DISTRIBUTION OF FLUIDS APPLIED TO THE SURFACE OF THE BODY OF THE APPARATUS AND METHOD OF FORMING AN ARRAY OF LAYERS OF AMPHIPHILIC MOLECULES

(51) International classification :G01N33/487
(31) Priority Document No :1202519.3
(32) Priority Date :13/02/2012
(33) Name of priority country :U.K.
(86) International Application No :PCT/GB2013/050333
Filing Date :13/02/2013
(87) International Publication No :WO 2013/121193
(61) Patent of Addition to Application Number :NA
Filing Date :NA
(62) Divisional to Application Number :NA
Filing Date :NA

(71)**Name of Applicant :**
1)OXFORD NANOPORE TECHNOLOGIES LIMITED
Address of Applicant :Edmund Cartwright House 4 Robert Robinson Avenue Oxford Science Park Oxford OX4 4GA U.K.
(72)**Name of Inventor :**
1)HYDE Jason Robert
2)CLARKE James Anthony
3)ANDREATTA Ga«lle Anne Leonie

(57) Abstract :
An apparatus for supporting an array of layers of amphiphilic molecules the apparatus comprising: a body (11) formed in a surface of the body an array of sensor wells (10) capable of supporting a layer of amphiphilic molecules (30) across the sensor wells the sensor wells each containing an electrode (12) for connection to an electrical circuit and formed in the surface of the body between the sensor wells flow control wells capable of smoothing the flow of a fluid across the surface.

No. of Pages : 45 No. of Claims : 55

(12) PATENT APPLICATION PUBLICATION
(19) INDIA
(22) Date of filing of Application :16/10/2014
(21) Application No.8663/DELNP/2014 A
(43) Publication Date : 22/05/2015

(54) Title of the invention : PROCESS FOR PREPARING A POLYETHYLENE PRODUCT IN A POLYMERIZATION LOOP REACTOR

(51) International classification :B01J19/18,C08F10/00,C08F10/02
(31) Priority Document No :12166881.8
(32) Priority Date :04/05/2012
(33) Name of priority country :EPO
(86) International Application No :PCT/EP2013/059217
Filing Date :03/05/2013
(87) International Publication No :WO 2013/164437
(61) Patent of Addition to Application Number :NA
Filing Date :NA
(62) Divisional to Application Number :NA
Filing Date :NA

(71)**Name of Applicant :**
1)TOTAL RESEARCH & TECHNOLOGY FELUY
Address of Applicant :Zone Industrielle C B 7181 Seneffe Belgium
(72)**Name of Inventor :**
1)GIGUERE Robin
2)MIGNON Denis
3)TANGUY Philippe
4)FRADETTE Louis

(57) Abstract :
The present invention relates to a process for preparing polyolefin in a polymerization loop reactor said loop reactor comprising: a plurality of interconnected pipes defining a flow path for a polyolefin slurry and one or more settling legs provided on at least one horizontal part of said interconnected pipes said process comprising the steps of: feeding olefin monomer liquid diluent polymerization catalyst optionally hydrogen and optionally olefin co monomer into said loop reactor; and polymerizing said olefin monomer and said optionally co monomer to produce said polyolefin slurry in said loop reactor; wherein the circulation velocity of the polyolefin slurry inside at least one horizontal part of said interconnected pipes provided with one or more settling legs is reduced by at least 20% and at most 60% compared to the circulation velocity inside the remainder of said loop reactor.

No. of Pages : 29 No. of Claims : 12

(12) PATENT APPLICATION PUBLICATION
(19) INDIA
(22) Date of filing of Application :14/10/2014
(21) Application No.8577/DELNP/2014 A
(43) Publication Date : 22/05/2015

(54) Title of the invention : STEEL MATERIAL

(51) International classification :C22C38/00,B21B3/02,C21D9/46
(31) Priority Document No :2012161730
(32) Priority Date :20/07/2012
(33) Name of priority country :Japan
(86) International Application No :PCT/JP2013/069805
Filing Date :22/07/2013
(87) International Publication No :WO 2014/014120
(61) Patent of Addition to Application Number :NA
Filing Date :NA
(62) Divisional to Application Number :NA
Filing Date :NA

(71)**Name of Applicant :**
1)NIPPON STEEL & SUMITOMO METAL CORPORATION
Address of Applicant :6 1 Marunouchi 2 chome Chiyoda ku Tokyo 1008071 Japan
(72)**Name of Inventor :**
1)KAWANO Kaori
2)TASAKA Masahito
3)NAKAZAWA Yoshiaki
4)TANAKA Yasuaki
5)TOMIDA Toshiro

(57) Abstract :
A steel material that has a chemical composition which contains in terms of mass% 0.05 0.2% excluding 0.05% C 1 3% Mn 0.5 1.8% excluding 0.5% Si 0.01 0.5% Al 0.001 0.015% N more than 0.1% to 0.25% Ti or the sum of V and Ti at least 0.001% Ti 0 0.25% Cr and 0 0.35% Mo with the remainder comprising Fe and impurities and that has a steel structure which is a dual phase structure comprising at least 50% by area main phase comprising ferrite and a second phase comprising one or more constituents selected from the group consisting of bainite martensite and austenite the second phase having an average nanohardness less than 6.0 GPa. In cases when a boundary where the difference in orientation between the crystals is 2º or more is defined as a grain boundary and the region surrounded with this grain boundary is defined as a crystal grain all crystal grains in the main phase and second phase have an average grain diameter of 3 µm or less and the proportion of the length of small angle grain boundaries where the difference in orientation is 2 15º excluding 15º in the length of all grain boundaries is 15% or higher.

No. of Pages : 41 No. of Claims : 2

(12) PATENT APPLICATION PUBLICATION
(19) INDIA
(22) Date of filing of Application :14/10/2014
(21) Application No.8579/DELNP/2014 A
(43) Publication Date : 22/05/2015

(54) Title of the invention : VERIFICATION OF A COMPONENT IN AN INDUSTRIAL PLANT BY MEANS OF A MOBILE OPERATING DEVICE

(51) International classification :G06Q10/00
(31) Priority Document No :10 2012 208 138.0
(32) Priority Date :15/05/2012
(33) Name of priority country :Germany
(86) International Application No :PCT/EP2013/059795
Filing Date :13/05/2013
(87) International Publication No :WO 2013/171150
(61) Patent of Addition to Application Number :NA
Filing Date :NA
(62) Divisional to Application Number :NA
Filing Date :NA

(71)**Name of Applicant :**
1)SIEMENS AKTIENGESELLSCHAFT
Address of Applicant :Wittelsbacherplatz 2 80333 M¼nchen Germany
(72)**Name of Inventor :**
1)LEHOFER Martin

(57) Abstract :
The invention relates to a method for verifying an element (5) in an industrial plant (7) by means of mobile operating device (1) an element specific identification character (13) being assigned to the element (5). The aim of the invention is to provide a method in which a user can rapidly and in great detail verify the element (5) using the mobile operating device (1). Said aim is achieved by the following steps: reading the element (5) identification character (13) in a contactless manner by means of the operating device (1); identifying the element (5) by comparing the read identification character (13) to the assigned identification character of the element (5); transmitting at least one element specific information item (10) for the identified element (5) to the operating device (1); and outputting the transmitted element specific information item (10) to the operating device (1).

No. of Pages : 18 No. of Claims : 12

(12) PATENT APPLICATION PUBLICATION
(19) INDIA
(22) Date of filing of Application :16/10/2014
(21) Application No.8683/DELNP/2014 A
(43) Publication Date : 22/05/2015

(54) Title of the invention : CASE HARDENING STEEL MATERIAL

(51) International classification :C22C38/00,C22C38/28,C22C38/50
(31) Priority Document No :2012099332
(32) Priority Date :25/04/2012
(33) Name of priority country :Japan
(86) International Application No :PCT/JP2013/061265
Filing Date :16/04/2013
(87) International Publication No :WO 2013/161623
(61) Patent of Addition to Application Number :NA
Filing Date :NA
(62) Divisional to Application Number :NA
Filing Date :NA

(71)**Name of Applicant :**
1)NIPPON STEEL & SUMITOMO METAL CORPORATION
Address of Applicant :6 1 Marunouchi 2 chome Chiyoda ku Tokyo 1008071 Japan
2)HONDA MOTOR CO. LTD.
(72)**Name of Inventor :**
1)IMATAKA Hideki
2)HORIMOTO Masayuki
3)KATO Gen
4)FUJIMOTO Mitsuru

(57) Abstract :
A case hardening steel material which has a chemical composition that contains in mass% 0.15 to 0.23% of C 0.01 to 0.15% of Si 0.65 to 0.90% of Mn 0.010 to 0.030% of S 1.65 to 1.80% of Cr 0.015 to 0.060% of Al 0.0100 to 0.0250% of N and if necessary a specific amount of Cu and/or Ni with the balance being Fe and impurities and that satisfies 25 = Mn/S = 85 0.90 = Cr/(Si+2Mn) = 1.20 and 1.16Si+0.70Mn+Cr = 2.20 with the contents of P Ti and O as impurities satisfying P=0.020% Ti=0.005% and O=0.0015% and which has a structure that comprises 20 to 70% of ferrite in area fraction with the remainder being pearlite and/or bainite. This case hardening steel material exhibits a low component cost and excellent hot workability and machinability and can ensure excellent bending fatigue strength and wear resistance of a carburized part thus being suitable as a raw material for a carburized part such as a CVT pulley shaft.

No. of Pages : 47 No. of Claims : 2

(12) PATENT APPLICATION PUBLICATION
(21) Application No.8684/DELNP/2014 A
(19) INDIA
(22) Date of filing of Application :16/10/2014
(43) Publication Date : 22/05/2015

(54) Title of the invention : PETAL CONTROL VALVE FOR SEPARABLE CONNECTION UNITS FOR FLEXIBLE HOSES

(51) International classification :F16K1/16,F16L55/10
(31) Priority Document No :MI2012A000695
(32) Priority Date :26/04/2012
(33) Name of priority country :Italy
(86) International Application No :PCT/IB2013/053236
Filing Date :24/04/2013
(87) International Publication No :WO 2013/160846
(61) Patent of Addition to Application Number :NA
Filing Date :NA
(62) Divisional to Application Number :NA
Filing Date :NA

(71)**Name of Applicant :**
1)MIB ITALIANA S.P.A.
Address of Applicant :Via Garibaldi 6 I 35020 Casalserugo PD Italy
(72)**Name of Inventor :**
1)BORMIOLI Lorenzo

(57) Abstract :
Control valve (5,5) for connection units for flexible hoses comprising a plurality of petals (segments or sectors) (6,7; 6,7) rotatable between a position of complete opening and a position of complete closing. The aforesaid petals (6,7; 6,7) are rotatable around pivoting axes defined by spherical pins (70) interposed between laterally adjacent petals and provided with a threaded positioning neck (71) inserted and screwed in a respective radial hole (72) of the body (1,2) of the connection unit. A locking cap (73) is screwed in said radial hole (72) and tightly abutting against said neck (71) of the spherical pin (70) for keeping said spherical pin (70) in a suitable position to enable a correct and precise pivoting between the two adjacent petals (6,7; 6,7).

No. of Pages : 23 No. of Claims : 5

(12) PATENT APPLICATION PUBLICATION
(19) INDIA
(22) Date of filing of Application :14/10/2014
(21) Application No.8558/DELNP/2014 A
(43) Publication Date : 22/05/2015

(54) Title of the invention : METHOD FOR REDUCING SILICONE ANTIFOAM USAGE IN DELAYED COKING PROCESSES

(51) International classification :C10G9/00
(31) Priority Document No :61/612852
(32) Priority Date :19/03/2012
(33) Name of priority country :U.S.A.
(86) International Application No :PCT/US2013/032279
Filing Date :15/03/2013
(87) International Publication No :WO 2013/142356
(61) Patent of Addition to Application Number :NA
Filing Date :NA
(62) Divisional to Application Number :NA
Filing Date :NA

(71)**Name of Applicant :**
1)FOSTER WHEELER USA CORPORATION
Address of Applicant :585 North Dairy Ashford Road Houston TX 77079 U.S.A.
(72)**Name of Inventor :**
1)ELLIOTT John Daniel
2)WAGGONER Jerry Neil

(57) Abstract :
The current invention provides an improved petroleum coking process wherein the risk of silicone poisoning of units downstream of the coke drums is reduced. The method of the current invention controls the foam layer within the coke drum by injection of a silicone anti foam agent in a highly aromatic carrier fluid such as slurry oil.

No. of Pages : 9 No. of Claims : 5

(12) PATENT APPLICATION PUBLICATION
(21) Application No.8559/DELNP/2014 A
(19) INDIA
(22) Date of filing of Application :14/10/2014
(43) Publication Date : 22/05/2015

(54) Title of the invention : INTEGRATION OF SOLVENT DEASPHALTING WITH RESIN HYDROPROCESSING AND WITH DELAYED COKING

(51) International classification :C10G53/04
(31) Priority Document No :61/612855
(32) Priority Date :19/03/2012
(33) Name of priority country :U.S.A.
(86) International Application No :PCT/US2013/031941
Filing Date :15/03/2013
(87) International Publication No :WO 2013/142313
(61) Patent of Addition to Application Number :NA
Filing Date :NA
(62) Divisional to Application Number :NA
Filing Date :NA

(71)**Name of Applicant :**
1)FOSTER WHEELER USA CORPORATION
Address of Applicant :585 North Dairy Ashford Road Houston TX 77079 U.S.A.
(72)**Name of Inventor :**
1)GILLIS Daniel B.

(57) Abstract :
The invention is directed to a process that combines the solvent deasphalting with resin hydrotreatment and coupled with delayed coking so as to reduce the costs associated with performing each of the steps separately. The integrated process of the invention permits higher product yields coupled with lower energy and transportation costs.

No. of Pages : 25 No. of Claims : 21

(12) PATENT APPLICATION PUBLICATION
(19) INDIA
(22) Date of filing of Application :16/10/2014
(21) Application No.8671/DELNP/2014 A
(43) Publication Date : 22/05/2015

(54) Title of the invention : SEPARATION METHOD AND SEPARATION MATRIX

(51) International classification :B01D15/36,B01J20/26,B01J20/289
(31) Priority Document No :12504130
(32) Priority Date :25/04/2012
(33) Name of priority country :Sweden
(86) International Application No :PCT/SE2013/050427
Filing Date :22/04/2013
(87) International Publication No :WO 2013/162449
(61) Patent of Addition to Application Number :NA
Filing Date :NA
(62) Divisional to Application Number :NA
Filing Date :NA

(71)**Name of Applicant :**
1)GE HEALTHCARE BIO SCIENCES AB
Address of Applicant :Patent Department Bjrkgatan 30 S 751 84 Uppsala Sweden
(72)**Name of Inventor :**
1)HANSSON Jesper
2)RODRIGO Gustav
3)S–DERMAN Tobias E.

(57) Abstract :
The invention discloses a method of separating a biomolecule from at least one other component in a liquid comprising a step of contacting said liquid with a separation matrix comprising a solid support and polymer chains bound to said solid support. The polymer chains comprise units derived from a first monomer of structure CH=CH L X where L is a covalent bond or an alkyl ether or hydroxysubstituted alkyl ether chain comprising 2 6 carbon atoms and X is a sulfonate or phosphonate group.

No. of Pages : 42 No. of Claims : 33

(12) PATENT APPLICATION PUBLICATION
(19) INDIA
(22) Date of filing of Application :16/10/2014
(21) Application No.8672/DELNP/2014 A
(43) Publication Date : 22/05/2015

(54) Title of the invention : NOVEL DOSAGE FORM AND FORMULATION OF ABEDITEROL

(51) International classification	:A61K9/14,A61K31/4706,A61K9/00
(31) Priority Document No	:12382221.5
(32) Priority Date	:31/05/2012
(33) Name of priority country	:EPO
(86) International Application No	:PCT/EP2013/061181
Filing Date	:30/05/2013
(87) International Publication No	:WO 2013/178742
(61) Patent of Addition to Application Number	:NA
Filing Date	:NA
(62) Divisional to Application Number	:NA
Filing Date	:NA

(71)**Name of Applicant :**
1)ALMIRALL S.A.
Address of Applicant :Ronda del General Mitre 151 E 08022 Barcelona Spain
(72)**Name of Inventor :**
1)ALLAIN RUIZ Sandrine
2)SEOANE NUNEZ Beatriz
3)DE MIQUEL SERRA Gonzalo

(57) Abstract :
The present invention provides a pharmaceutical composition in the form of a dry powder for inhalation comprising abediterol or a pharmaceutically acceptable salt in admixture with a pharmaceutically acceptable carrier providing upon inhalation a dose equivalent to a metered nominal dose of about 1.25 or about 2.5 micrograms of free base abediterol administered with the Genuair® inhaler. The present invention also provides said pharmaceutical composition for use in the treatment of respiratory disease such as asthma and chronic obstructive pulmonary disease COPD.

No. of Pages : 49 No. of Claims : 28

(12) PATENT APPLICATION PUBLICATION
(19) INDIA
(22) Date of filing of Application :16/10/2014
(21) Application No.8674/DELNP/2014 A
(43) Publication Date : 22/05/2015

(54) Title of the invention : SHUTTER ASSEMBLY FOR A LUMINESCENCE BASED SAMPLE ANALYZER

(51) International classification :G03B9/14
(31) Priority Document No :61/652553
(32) Priority Date :29/05/2012
(33) Name of priority country :U.S.A.
(86) International Application No :PCT/US2013/042372
Filing Date :23/05/2013
(87) International Publication No :WO 2013/181052
(61) Patent of Addition to Application Number :NA
Filing Date :NA
(62) Divisional to Application Number :NA
Filing Date :NA

(71)**Name of Applicant :**
1)SIEMENS HEALTHCARE DIAGNOSTICS INC.
Address of Applicant :511 Benedict Ave. Tarrytown NY 10591 U.S.A.
(72)**Name of Inventor :**
1)JASPERSE Jeffrey R.

(57) Abstract :
A shutter assembly includes a first shutter blade having a first toothed arm extending therefrom and a first light transmitting aperture therein and a second shutter blade positioned adjacent and parallel to the first shutter blade. The second shutter blade has a second toothed arm extending therefrom and a second light transmitting aperture therein. The first and second shutter blades are supported to allow parallel linear motion. A motor gear is disposed between and meshed with the first and second toothed arms such that rotation of the gear causes the first and second shutter blades to move linearly in opposite directions between an open position in which the first and second light transmitting apertures are in an overlapping relationship with respect to one another and a closed position in which the first and second light transmitting apertures are in a non overlapping relationship with respect to one another.

No. of Pages : 32 No. of Claims : 28

(12) PATENT APPLICATION PUBLICATION
(19) INDIA
(22) Date of filing of Application :16/10/2014
(21) Application No.8675/DELNP/2014 A
(43) Publication Date : 22/05/2015

(54) Title of the invention : RECOMBINANT MYCOBACTERIUM ENCODING A HEPARIN BINDING HEMAGGLUTININ (HBHA) FUSION PROTEIN AND USES THEREOF

(51) International classification :C12N1/21,C12N15/62,C07K19/00
(31) Priority Document No :NA
(32) Priority Date :NA
(33) Name of priority country :NA
(86) International Application No :PCT/US2012/033757
Filing Date :16/04/2012
(87) International Publication No :WO 2013/158061
(61) Patent of Addition to Application Number :NA
Filing Date :NA
(62) Divisional to Application Number :NA
Filing Date :NA

(71)**Name of Applicant :**
1)AERAS GLOBAL TB VACCINE FOUNDATION
Address of Applicant :1405 Research Boulevard 3rd Floor Rockville MD 20850 U.S.A.
2)INSTITUT NATIONAL DE LA SANTE ET DE LA RECHERCHE MEDICALE (INSERM)
(72)**Name of Inventor :**
1)FULKERSON John
2)BRENNAN Michael
3)VLEMURUGAN Kamalakannan
4)LOCHT Camille

(57) Abstract :
Recombinant Mycobacteria (rMyc) which contain sequences encoding a heparin binding hemagglutinin (HBHA) fusion protein are provided as are methods of making and using the rMyc and the fusion protein. The fusion protein includes an amino terminal mycobacterial antigen Ag85B leader peptide and transcription of the fusion protein is driven by an Ag85B promoter sequence. The recombinant fusion protein is produced in abundance by the rMyc is post translationally methylated and is highly antigenic.

No. of Pages : 59 No. of Claims : 46

(12) PATENT APPLICATION PUBLICATION
(19) INDIA
(22) Date of filing of Application :14/10/2014
(21) Application No.8570/DELNP/2014 A
(43) Publication Date : 22/05/2015

(54) Title of the invention : SOLID PARTICULATE TANK MIX ADJUVANT COMPRISING A BASE SELECTED FROM A CARBONATE AND/OR A PHOSPHATE

(51) International classification :A01P13/00,A01N59/26,A01N59/00
(31) Priority Document No :61/613505
(32) Priority Date :21/03/2012
(33) Name of priority country :U.S.A.
(86) International Application No :PCT/EP2013/055608
Filing Date :19/03/2013
(87) International Publication No :WO 2013/139753
(61) Patent of Addition to Application Number :NA
Filing Date :NA
(62) Divisional to Application Number :NA
Filing Date :NA

(71)**Name of Applicant :**
1)BASF SE
Address of Applicant :67056 Ludwigshafen Germany
(72)**Name of Inventor :**
1)SCHNABEL Gerhard
2)NOLTE Marc
3)GENARI Gerhard
4)KLINGELHOEFER Paul
5)ETCHEVERRY Mariano Ignacio
6)BOWE Steven
7)FRIHAUF John
8)BROMMER Chad
9)CANNAN Terrance M.
10)THOMAS Walter
11)STAAL Maarten

(57) Abstract :
The present invention relates to q method for preparing a tank mix which comprises the step of contacting a pesticide formulation water and a tank mix adjuvant wherein the tank mix adjuvant comprises a base selected from a carbonate and/or a phosphate and wherein the tank mix adjuvant is present in form of a particulate solid which contains at least 10 wt% of the base. The invention also relates to a use of a tank mix adjuvant for increasing the efficacy of a pesticide wherein the tank mix adjuvant comprises a base selected from a carbonate and/or a phosphate and wherein the tank mix adjuvant is present in form of a particulate solid which contains at least 10 wt% of the base; to a tank mix adjuvant which comprises an auxiliary and a base selected from a carbonate and/or a phosphate wherein the tank mix adjuvant is present in form in form of a particulate solid which contains at least 10 wt% of the base; and to a method of controlling phytopathogenic fungi and/or undesired vegetation and/or undesired insect or mite attack and/or for regulating the growth of plants wherein the tank mix is allowed to act on the respective pests their environment or the plants to be protected from the respective pest on the soil and/or on undesired plants and/or the crop plants and/or their environment.

No. of Pages : 28 No. of Claims : 16

(12) PATENT APPLICATION PUBLICATION
(19) INDIA
(22) Date of filing of Application :16/10/2014
(21) Application No.8677/DELNP/2014 A
(43) Publication Date : 22/05/2015

(54) Title of the invention : AN ALL IN ONE WIRELESS WEIGHING MODULE

(51) International classification :G08C17/00,G01G19/40
(31) Priority Document No :201220122278.2
(32) Priority Date :28/03/2012
(33) Name of priority country :China
(86) International Application No :PCT/CN2013/073267
Filing Date :27/03/2013
(87) International Publication No :WO 2013/143461
(61) Patent of Addition to Application Number :NA
Filing Date :NA
(62) Divisional to Application Number :NA
Filing Date :NA

(71)**Name of Applicant :**
1)METTLER TOLEDO (CHANGZHOU) PRECISION INSTRUMENT LTD.
Address of Applicant :No.5 Middle Huashan Road Xinbei District Changzhou Jiangsu 213022 China
2)METTLER TOLEDO (CHANGZHOU) MEASUREMENT TECHNOLOGY LTD.
3)METTLER TOLEDO (CHANGZHOU) SCALE & SYSTEM LTD.
(72)**Name of Inventor :**
1)GAO Ming
2)HAN Qi
3)QIAN Tao
4)ZHANG Xingwei
5)ZHU Dan
6)GUO Wenwei
7)JIANG Zhiming

(57) Abstract :
The present invention relates to an all in one wireless weighing module comprising a master chip a power supply module a wireless communication module a wired communication module and a weight acquisition module wherein the power supply module for providing operational power is connected with the power terminals of the master chip the wireless communication module the wired communication module and the weight acquisition module respectively; a power control terminal of the master chip is connected with the power supply module; a signal output terminal of the weight acquisition module is connected with a signal input terminal of the master chip; and the wired communication module and the wireless communication module are connected with a communication interface of the master chip. The present invention provides for a wireless weighing module with reduced volume cost and power consumption.

No. of Pages : 7 No. of Claims : 3

(12) PATENT APPLICATION PUBLICATION
(19) INDIA
(22) Date of filing of Application :16/10/2014
(21) Application No.8679/DELNP/2014 A
(43) Publication Date : 22/05/2015

(54) Title of the invention : MULTI RATIO PLANETARY GEAR TRANSMISSION

(51) International classification :F16H3/66,F02B67/06,B60K6/30
(31) Priority Document No :13/440474
(32) Priority Date :05/04/2012
(33) Name of priority country :U.S.A.
(86) International Application No :PCT/US2013/034098
Filing Date :27/03/2013
(87) International Publication No :WO 2013/151843
(61) Patent of Addition to Application Number :NA
Filing Date :NA
(62) Divisional to Application Number :NA
Filing Date :NA

(71)**Name of Applicant :**
1)THE GATES CORPORATION
Address of Applicant :(a Delaware Corporation) 1551 Wewatta Street Denver CO 80202 U.S.A.
(72)**Name of Inventor :**
1)SCHNEIDER Dean
2)SERKH Alexander
3)ALI Imtiaz
4)WARD Peter

(57) Abstract :
A transmission comprising a first compound planetary gear set having a first brake (16) engaged with a sun gear a second compound planetary gear set having a second brake (27) engaged with a ring gear the first compound planetary gear set and the second planetary gear set axially engagable through a first clutch (17) and a second clutch (28) and the transmission input (14) and transmission output (100) disposed coaxially and configured to input and output torque from the same side of the transmission. The transmission is used in an accessory drive the accessory drive comprising an alternator (1302); a flywheel (1200) coupled to the transmission and the accessory drive the accessory drive being selectively drivable by the flywheel or the engine

No. of Pages : 24 No. of Claims : 7

CONTINUED TO PART- 2

(12) PATENT APPLICATION PUBLICATION
(21) Application No.8680/DELNP/2014 A
(19) INDIA
(22) Date of filing of Application :16/10/2014
(43) Publication Date : 22/05/2015

(54) Title of the invention : STARTER MOTOR PROVIDED WITH A TRANSLATABLY FIXED FREE WHEEL

(51) International classification :F02N15/02,F02N15/00
(31) Priority Document No :1254485
(32) Priority Date :16/05/2012
(33) Name of priority country :France
(86) International Application No :PCT/FR2013/051070
Filing Date :16/05/2013
(87) International Publication No :WO 2013/171432
(61) Patent of Addition to Application Number :NA
Filing Date :NA
(62) Divisional to Application Number :NA
Filing Date :NA

(71)**Name of Applicant :**
1)VALEO EQUIPEMENTS ELECTRIQUES MOTEUR
Address of Applicant :2 rue Andr Boulle F 94046 Crteil Cedex France
(72)**Name of Inventor :**
1)GENTIL Maximilien
2)SALTEL Alexandre

(57) Abstract :
The invention essentially relates to a starter motor (1) for a heat engine of a motor vehicle comprising: an electric motor having a stator (7) and a rotor (3) mounted on a rotor shaft (5); a translatably mobile starter shaft (15) carrying a drive pinion (13) that can move from an idle position wherein the drive pinion (13) is released from a rotational element connected to the crankshaft of the heat engine to an active position wherein the drive pinion (13) is used to rotatably drive the rotational element connected to the crankshaft of the heat engine; and a speed reducer group (17) inserted between the rotor shaft (5) and the starter shaft (15). The invention is characterised in that it also comprises a translatably fixed free wheel (16) that has an input end rotatably connected to the speed reducer group (17) and an output end consisting of a drive shaft (18). The starter shaft (15)is mounted in a translatably mobile manner on the drive shaft (18) by means of a helicoidal connection.

No. of Pages : 21 No. of Claims : 16

(12) PATENT APPLICATION PUBLICATION
(19) INDIA
(22) Date of filing of Application :14/10/2014
(21) Application No.8587/DELNP/2014 A
(43) Publication Date : 22/05/2015

(54) Title of the invention : DEVICE FOR DISPENSING A FLUID PRODUCT

(51) International classification :A61M15/00
(31) Priority Document No :1255010
(32) Priority Date :31/05/2012
(33) Name of priority country :France
(86) International Application No :PCT/FR2013/051216
Filing Date :30/05/2013
(87) International Publication No :WO 2013/178951
(61) Patent of Addition to Application Number :NA
Filing Date :NA
(62) Divisional to Application Number :NA
Filing Date :NA

(71)**Name of Applicant :**
1)APTAR FRANCE SAS
Address of Applicant :BP G Le Prieur F 27110 Le Neubourg France
(72)**Name of Inventor :**
1)COLOMB Arnaud
2)KIRNIAK Maxime

(57) Abstract :
The present invention relates to a device for dispensing a fluid product and specifically to a dry powder inhalator comprising a system for triggering (60) by inhalation loaded by means of an arming member (800) which slides over a cam surface (51) when the device is opened. Said cam surface comprises at least three cam portions having different slopes: a loading portion (511; 511) for moving the arming member in order to load a spring; an end portion (515; 515) for blocking the arming member in the open and/or closed position of the device; and a safety portion (513; 513) connecting the loading portion to the end portion which acts such as to maintain the device in a stable position thus enabling reliable actuation of the inhalator.

No. of Pages : 23 No. of Claims : 7

(12) PATENT APPLICATION PUBLICATION
(19) INDIA
(22) Date of filing of Application :14/10/2014
(21) Application No.8590/DELNP/2014 A
(43) Publication Date : 22/05/2015

(54) Title of the invention : GALVANNEALED HOT ROLLED STEEL SHEET AND METHOD FOR MANUFACTURING SAME

(51) International classification :C22C38/14,C22C38/50,C21D8/02
(31) Priority Document No :2012087539
(32) Priority Date :06/04/2012
(33) Name of priority country :Japan
(86) International Application No :PCT/JP2012/073163
Filing Date :11/09/2012
(87) International Publication No :WO 2013/150669
(61) Patent of Addition to Application Number :NA
Filing Date :NA
(62) Divisional to Application Number :NA
Filing Date :NA

(71)**Name of Applicant :**
1)NIPPON STEEL & SUMITOMO METAL CORPORATION
Address of Applicant :6 1 Marunouchi 2 chome Chiyoda ku Tokyo 1008071 Japan
(72)**Name of Inventor :**
1)YOKOYAMA Takafumi
2)NOMURA Shigeki

(57) Abstract :
A high strength galvannealed hot rolled steel sheet that is suitable for stretch flanging has an excellent hole expansibility preferably shows a high yield ratio and has a tensile strength of 650 MPa or greater wherein the hot rolled steel sheet used as a plating base material has a chemical composition comprising in terms of mass% 0.01 0.20% inclusive of C 0.50% or less of Si 0.01 1.30% inclusive of Mn 0.05% or less of P 0.01% or less of S 0.01% or less of N 0.50% or less of Al and 0.05 0.50% inclusive of Ti and a steel structure comprising 80% by area or more of polygonal ferrite and the remainder consisting of one or more members selected from the group consisting of bainitic ferrite bainite perlite and cementite.

No. of Pages : 27 No. of Claims : 6

(12) PATENT APPLICATION PUBLICATION
(21) Application No.8701/DELNP/2014 A
(19) INDIA
(22) Date of filing of Application :16/10/2014
(43) Publication Date : 22/05/2015

(54) Title of the invention : EPOXY RESIN CURING AGENT EPOXY RESIN COMPOSITION GAS BARRIER ADHESIVE AGENT AND GAS BARRIER LAMINATE BODY

(51) International classification :C08G59/44,B32B15/08,B32B27/38
(31) Priority Document No :2012103912
(32) Priority Date :27/04/2012
(33) Name of priority country :Japan
(86) International Application No :PCT/JP2013/058636
Filing Date :25/03/2013
(87) International Publication No :WO 2013/161480
(61) Patent of Addition to Application Number :NA
Filing Date :NA
(62) Divisional to Application Number :NA
Filing Date :NA

(71)**Name of Applicant :**
1)MITSUBISHI GAS CHEMICAL COMPANY INC.
Address of Applicant :5 2 Marunouchi 2 chome Chiyoda ku Tokyo 1008324 Japan
2)Henkel AG & Co. KGaA
(72)**Name of Inventor :**
1)HONDA Eiichi
2)KOUNO Kazuki

(57) Abstract :
Provided are: an epoxy resin curing agent that can cause the realization of high gas barrier properties and favorable adhesion to various plastics particularly polyesters; an epoxy resin composition; a gas barrier adhesive agent containing the epoxy resin composition; and a gas barrier laminate body and the like having high gas barrier properties and favorable adhesion to various plastics particularly polyesters. The epoxy resin curing agent is the reaction product of the belowmentioned (A) and (B). Also the epoxy resin curing agent contains at least an epoxy resin and the epoxy resin curing agent. (A) is meta xylylene diamine or para xylylene diamine and (B) is an unsaturated carboxylic acid represented by formula (1) and/or a derivative thereof (in formula (1) R represents an alky group having 1,8 carbon atoms an aralkyl group having 1 8 carbon atoms or an aryl group).

No. of Pages : 100 No. of Claims : 22

(12) PATENT APPLICATION PUBLICATION
(19) INDIA
(22) Date of filing of Application :16/10/2014
(21) Application No.8702/DELNP/2014 A
(43) Publication Date : 22/05/2015

(54) Title of the invention : SYSTEM AND METHOD FOR ESTABLISHING AND/OR MAINTAINING PROPER ALIGNMENT OF A ROBOTIC TRANSFER MECHANISM

(51) International classification :G01N35/00,B25J9/10
(31) Priority Document No :61/617440
(32) Priority Date :29/03/2012
(33) Name of priority country :U.S.A.
(86) International Application No :PCT/US2013/033835
Filing Date :26/03/2013
(87) International Publication No :WO 2013/148648
(61) Patent of Addition to Application Number :NA
Filing Date :NA
(62) Divisional to Application Number :NA
Filing Date :NA

(71)**Name of Applicant :**
1)BIOMERIEUX INC.
Address of Applicant :100 Rodolphe Street Durham NC 27712 U.S.A.
(72)**Name of Inventor :**
1)WILSON Mark
2)TRIGG Richard
3)CLYNES Walter

(57) Abstract :
The present invention is directed to a system and method for establishing and/or maintaining proper alignment of a transfer mechanism. More specifically the present invention is directed to an alignment system and method having one or more of: (a) a laser alignment device operable to providing precise locational coordinates for alignment of a robotic transfer mechanism relative to a holding structure; (b) an alignment tool for aligning a laser alignment device relative to robotic transfer mechanism; (c) lead in ramps to properly guide an individual specimen container into a holding well; and/or (d) a belt tensioning device for maintaining proper tension on one or more timing belts.

No. of Pages : 60 No. of Claims : 26

(12) PATENT APPLICATION PUBLICATION
(19) INDIA
(22) Date of filing of Application :14/08/2014
(21) Application No.6875/DELNP/2014 A
(43) Publication Date : 22/05/2015

(54) Title of the invention : OPERATION PLANNING SYSTEM

(51) International classification :H02J3/46,G06Q50/06,H02J3/00
(31) Priority Document No :2012017315
(32) Priority Date :30/01/2012
(33) Name of priority country :Japan
(86) International Application No:PCT/JP2012/080333
Filing Date :22/11/2012
(87) International Publication No :WO 2013/114712
(61) Patent of Addition to Application Number :NA
Filing Date :NA
(62) Divisional to Application Number :NA
Filing Date :NA

(71)**Name of Applicant :**
1)KABUSHIKI KAISHA TOSHIBA
Address of Applicant :1 1 Shibaura 1 chome Minato ku Tokyo 1058001 Japan
(72)**Name of Inventor :**
1)NODA Hideki
2)OBARA Reiko
3)KOBAYASHI Takenori
4)KIYA Genki

(57) Abstract :
Provided is an operation planning system capable of formulating an operation plan while taking into account environmental effects presented by storage cell power generation. In the formulation of an operation plan for power generation in an electrical power grid (2) having a plurality of power plants (21) and substations (22) and a plurality of storage cells (23) provided to the power plants (21) and substations (22) an operation planning system (1) stores power generation source unit information (D3) of the power plants (21) and origin information of stored energy of the storage cells (23) in advance. Then on the basis of the power generation source unit information (D3) of the power plants (21) and the origin information of the stored energy power generation source unit information of the storage cells (23) is determined to which a power generation source unit of stored energy is added and while a power generation facility is selected from the power plants (21) and the storage cells (23) in the order of the lowest value indicated by the power generation source unit information the power generation amount of the selected power generation facility is continually added to the total power generation amount until demand and the total power generation amount are equal.

No. of Pages : 60 No. of Claims : 14

(12) PATENT APPLICATION PUBLICATION
(19) INDIA
(22) Date of filing of Application :14/08/2014
(21) Application No.6876/DELNP/2014 A
(43) Publication Date : 22/05/2015

(54) Title of the invention : METHOD FOR PRODUCING COMPOSITION FOR OPTICAL MATERIAL

(51) International classification :C08G75/08,G02B1/04,G02C7/02
(31) Priority Document No :2012021022
(32) Priority Date :02/02/2012
(33) Name of priority country :Japan
(86) International Application No :PCT/JP2013/051970
Filing Date :30/01/2013
(87) International Publication No :WO 2013/115212
(61) Patent of Addition to Application Number :NA
Filing Date :NA
(62) Divisional to Application Number :NA
Filing Date :NA

(71)**Name of Applicant :**
1)MITSUBISHI GAS CHEMICAL COMPANY INC.
Address of Applicant :MITSUBISHI Building 5 2 Marunouchi 2 chome Chiyoda ku Tokyo 1008324 Japan
(72)**Name of Inventor :**
1)AOKI Takashi
2)ISHIZUKA Hirohito
3)KOSHIISHI Eiji
4)TAKEUCHI Motoharu

(57) Abstract :
Through the present invention a composition for an optical material can be produced which makes it possible to obtain a uniform optical material by pre polymerizing (a) an inorganic compound having a sulfur atom and (b) an episulfide compound using a hindered amine as a catalyst and subsequently adding and mixing (c) a polythiol compound and (d) a polyisocyanate compound. By also polymerization hardening this composition for an optical material an optical material can be provided having a high refractive index (ne of 1.73 or higher) high strength (elongation of 13% or more in three point bend testing and good drilling resistance) and high heat resistance (softening point of 70°C or higher measured by TMA).

No. of Pages : 26 No. of Claims : 6

(12) PATENT APPLICATION PUBLICATION
(19) INDIA
(22) Date of filing of Application :14/08/2014
(21) Application No.6878/DELNP/2014 A
(43) Publication Date : 22/05/2015

(54) Title of the invention : RECONFIGURABLE BATTERY

(51) International classification :H02P3/14,H02P5/00,H02P5/685
(31) Priority Document No :13/368421
(32) Priority Date :08/02/2012
(33) Name of priority country :U.S.A.
(86) International Application No :PCT/US2013/021877
Filing Date :17/01/2013
(87) International Publication No:WO 2013/119367
(61) Patent of Addition to Application Number :NA
Filing Date :NA
(62) Divisional to Application Number :NA
Filing Date :NA

(71)**Name of Applicant :**
1)LEE Chong UK
Address of Applicant :11454 Via Santa Brisa San Diego California 92131 U.S.A.
(72)**Name of Inventor :**
1)LEE Chong UK

(57) Abstract :
A reconfigurable battery has at least one bank of statically joined series connected battery cells each cell including a positive and a negative pole. The poles connect through switches to respective output connections. Activating a set of processor controlled switches reconfigures at least some of the battery cells into a configuration to provide a voltage across the output connections. The output battery voltage may vary intermediately between zero volts and the maximum voltage produced by the series connected battery cells. An alternative configuration of switches divides groups of series connected battery cells into separate battery banks that permit other battery cell configurations. Duty cycle modulation of the switches allows intermediate control of output voltage with reduced switching transients. Reconfigurable battery cells used in combination with an electric motor permit selectable speed control and battery regeneration schemes matched to motor output.

No. of Pages : 61 No. of Claims : 36

(12) PATENT APPLICATION PUBLICATION
(19) INDIA
(22) Date of filing of Application :17/10/2014
(21) Application No.8729/DELNP/2014 A
(43) Publication Date : 22/05/2015

(54) Title of the invention : METHODS FOR PRODUCING 1,5,7-TRIAZABICYCLO[4.4.0] DEC 5 ENE BY REACTION OF A DISUBSTITUED CARBODIIMIDE AND DIPROPYLENE TRIAMINE

(51) International classification :C07D487/04
(31) Priority Document No :13/455651
(32) Priority Date :25/04/2012
(33) Name of priority country :U.S.A.
(86) International Application No :PCT/US2013/037713
Filing Date :23/04/2013
(87) International Publication No :WO 2013/163130
(61) Patent of Addition to Application Number :NA
Filing Date :NA
(62) Divisional to Application Number :NA
Filing Date :NA

(71)**Name of Applicant :**
1)PPG INDUSTRIES OHIO INC.
Address of Applicant :3800 West 143rd Street Cleveland Ohio 44111 U.S.A.
(72)**Name of Inventor :**
1)DACKO Christopher A.
2)KARABIN Richard F.
3)WILSON Craig A.
4)ZAWACKY Steven R.
5)MCCOLLUM Gregory J.

(57) Abstract :
Methods for producing 1,5,7 triazabicyclo[4.4.0]dec 5 ene using a disubstituted carbodiimide dipropylene triamine and optionally an ethereal solvent and/or an alcohol are disclosed. Use of 1,5 ,7 triazabicyclo[4.4.0]dec 5 ene produced by this method in an electrodepositable coating composition and electrophoretic deposition of such coating onto a substrate to form a coated substrate are also disclosed.

No. of Pages : 14 No. of Claims : 23

(12) PATENT APPLICATION PUBLICATION
(21) Application No.8647/DELNP/2014 A
(19) INDIA
(22) Date of filing of Application :15/10/2014
(43) Publication Date : 22/05/2015

(54) Title of the invention : A COMPUTERIZED AUTHORIZATION SYSTEM AND METHOD

(51) International classification :G06F21/30,G06F21/40
(31) Priority Document No :13/426467
(32) Priority Date :21/03/2012
(33) Name of priority country :U.S.A.
(86) International Application No :PCT/EP2013/055478
Filing Date :15/03/2013
(87) International Publication No :WO 2013/139710
(61) Patent of Addition to Application Number :NA
Filing Date :NA
(62) Divisional to Application Number :NA
Filing Date :NA

(71)**Name of Applicant :**
1)ARCTRAN HOLDINGS LIMITED
Address of Applicant :c/o BCS Windsor House Station Court Station Road Great Shelford Cambridge CB22 5NE U.K.
(72)**Name of Inventor :**
1)SHANNON Gary Martin

(57) Abstract :
A computerized authorization system configured to authorize electronically made requests to an electronic entity. The computerized authorization system comprises a store configured to store an indication of at least one predetermined electronic authorization device configured to authorize each electronically made request. The computerized authorization system is further configured such that: in response to receiving an electronically made request to the electronic entity an indication of the request is output to the at least one predetermined electronic authorization device configured to authorize the request as indicated in the store; and in response to receiving an indication of authorization from the at least one predetermined electronic authorization device an indication of authorization of the request is output to the electronic entity.

No. of Pages : 45 No. of Claims : 30

(12) PATENT APPLICATION PUBLICATION
(19) INDIA
(22) Date of filing of Application :15/10/2014
(21) Application No.8648/DELNP/2014 A
(43) Publication Date : 22/05/2015

(54) Title of the invention : APPARATUS AND METHOD FOR FAST CACHE SHUTDOWN

(51) International classification :G06F12/08
(31) Priority Document No :13/435539
(32) Priority Date :30/03/2012
(33) Name of priority country :U.S.A.
(86) International Application No :PCT/US2013/034847
Filing Date :01/04/2013
(87) International Publication No :WO 2013/149254
(61) Patent of Addition to Application Number :NA
Filing Date :NA
(62) Divisional to Application Number :NA
Filing Date :NA

(71)**Name of Applicant :**
1)ADVANCED MICRO DEVICES INC.
Address of Applicant :One AMD Place P.O. Box 3453 Sunnyvale California 94088 U.S.A.
(72)**Name of Inventor :**
1)MANNE Srilatha
2)BIRCHER William L.
3)GOVINDAN Madhu Sarvana Sibi
4)OCONNOR James M.
5)SCHULTE Michael J.

(57) Abstract :
An apparatus and method to enable a fast cache shutdown is disclosed. In one embodiment a cache subsystem includes a cache memory and a cache controller coupled to the cache memory. The cache controller is configured to upon restoring power to the cache subsystem inhibit writing of modified data exclusively into the cache memory.

No. of Pages : 33 No. of Claims : 30

(12) PATENT APPLICATION PUBLICATION
(19) INDIA
(22) Date of filing of Application :15/10/2014
(21) Application No.8650/DELNP/2014 A
(43) Publication Date : 22/05/2015

(54) Title of the invention : IMAGE SENSOR IMAGING METHOD AND IMAGING DEVICE

(51) International classification :H04N5/369,G02B7/34,G03B13/36
(31) Priority Document No :2012081167
(32) Priority Date :30/03/2012
(33) Name of priority country :Japan
(86) International Application No :PCT/JP2013/059622
Filing Date :29/03/2013
(87) International Publication No :WO 2013/147199
(61) Patent of Addition to Application Number :NA
Filing Date :NA
(62) Divisional to Application Number :NA
Filing Date :NA

(71)**Name of Applicant :**
1)NIKON CORPORATION
Address of Applicant :12 1 Yurakucho 1 chome Chiyoda ku Tokyo 1008331 Japan
(72)**Name of Inventor :**
1)MURATA Hironobu

(57) Abstract :
This image sensor comprises: a plurality of microlenses arranged in a two dimensional shape; and a plurality of pixels that are provided to each microlens and receive light of different color components. Pixels that receive light of the same color component which are provided to microlenses that are adjacent among the plurality of microlenses are adjacently positioned.

No. of Pages : 57 No. of Claims : 16

(12) PATENT APPLICATION PUBLICATION
(21) Application No.8735/DELNP/2014 A
(19) INDIA
(22) Date of filing of Application :17/10/2014
(43) Publication Date : 22/05/2015

(54) Title of the invention : PROCESS FOR MANUFACTURING AN ELECTROLYTIC BATH FOR THE PRODUCTION OF A PLATINUM BASED METALLIC SUBLAYER ON A METALLIC SUBSTRATE

(51) International classification :C25D3/50,C25D3/52,C25D5/34
(31) Priority Document No :1253599
(32) Priority Date :19/04/2012
(33) Name of priority country :France
(86) International Application No:PCT/FR2013/050855
Filing Date :18/04/2013
(87) International Publication No :WO 2013/156737
(61) Patent of Addition to Application Number :NA
Filing Date :NA
(62) Divisional to Application Number :NA
Filing Date :NA

(71)**Name of Applicant :**
1)SNECMA
Address of Applicant :2 boulevard du Gnral Martial Valin F 75015 Paris France
(72)**Name of Inventor :**
1)HUGOT Juliette
2)LAGRANGE Frdric
3)MOLET Herv

(57) Abstract :
The invention relates to a process for manufacturing an electrolytic bath for the production of a platinum based metallic sublayer on a metallic substrate which comprises the following steps: a) a first system comprising ligands and amine functional groups is provided said first system consisting of an aqueous solution with amine ligand comprising at least one compound X (NH) with X belonging to the group consisting of (CH,CH,CH,CH,(CH)) or NH or a salt x(NH) with x an acid radical belonging to the group consisting of (PO,HPO,HPO,HPO and HPO ,SO,HSO,CHCOO) n m and p being non zero integers b) a second system that forms a buffer system is provided c) a third system that provides a metal salt and consists of an aqueous solution with platinum is provided d) a fourth system that makes it possible to impart the conductive property to the medium is provided e) the four systems are mixed by means of which said electrolytic bath is obtained. The first system the third system and the fourth system are grouped together as a single first solution denoted by B; during step c) the third system forms a second solution denoted by A consisting of an aqueous solution with platinum IV and comprising sodium hydroxide (NaOH). During step e) the following sub steps are carried out: e1) the first solution B is covered and its temperature is brought to 50°C minimum for at least 1,h 30 min e2) the second solution A is added to the first solution B in order to form an electrolytic bath which comprises an amine platinum complex. Application to the manufacture of a metallic sublayer for a thermal barrier on a part made of a superalloy.

No. of Pages : 25 No. of Claims : 10

(12) PATENT APPLICATION PUBLICATION
(19) INDIA
(22) Date of filing of Application :14/10/2014

(21) Application No.8582/DELNP/2014 A
(43) Publication Date : 22/05/2015

(54) Title of the invention : PHARMACEUTICAL COMBINATIONS FOR THE TREATMENT OF METABOLIC DISORDERS

(51) International classification	:A61K31/4427,A61P3/00,A61K45/06
(31) Priority Document No	:61/644721
(32) Priority Date	:09/05/2012
(33) Name of priority country	:U.S.A.
(86) International Application No	:PCT/EP2013/059423
Filing Date	:07/05/2013
(87) International Publication No	:WO 2013/167554
(61) Patent of Addition to Application Number	:NA
Filing Date	:NA
(62) Divisional to Application Number	:NA
Filing Date	:NA

(71)**Name of Applicant :**
1)BOEHRINGER INGELHEIM INTERNATIONAL GMBH
Address of Applicant :Binger Strae 173 55216 Ingelheim am Rhein Germany
(72)**Name of Inventor :**
1)RAUCH Thomas
2)HAMILTON Bradford S.
3)TSUTSUMI Manami

(57) Abstract :
The invention relates to a pharmaceutical composition comprising the compound of formula (I) or solvates hydrates or pharmaceutically acceptable salts thereof in combination with at least one second therapeutic agent 2 which is suitable in the treatment or prevention of one or more conditions selected from type 1 diabetes mellitus type 2 diabetes mellitus impaired glucose tolerance and hyperglycemia. In addition the present invention relates to methods for preventing or treating of metabolic disorders and related conditions.

No. of Pages : 50 No. of Claims : 18

(12) PATENT APPLICATION PUBLICATION
(19) INDIA
(22) Date of filing of Application :14/10/2014
(21) Application No.8583/DELNP/2014 A
(43) Publication Date : 22/05/2015

(54) Title of the invention : DRY POWDER INHALATOR

(51) International classification :A61M15/00
(31) Priority Document No :1255009
(32) Priority Date :31/05/2012
(33) Name of priority country :France
(86) International Application No :PCT/FR2013/051213
Filing Date :30/05/2013
(87) International Publication No :WO 2013/178949
(61) Patent of Addition to Application Number :NA
Filing Date :NA
(62) Divisional to Application Number :NA
Filing Date :NA

(71)**Name of Applicant :**
1)APTAR FRANCE SAS
Address of Applicant :BP G Le Prieur F 27110 Le Neubourg France
(72)**Name of Inventor :**
1)COLOMB Arnaud
2)BAILLET Matthieu
3)KIRNIAK Maxime
4)LAUT Antoine

(57) Abstract :
The invention relates to a dry powder inhalator comprising a plurality of blister packs (20) arranged behind one another on a flexible strip an opening means (80) for opening a blister pack at each actuation of the device a first movement means (40) for moving one blister pack opposite said opening means before and/or after each actuation and a second movement means (50) for moving a blister pack against said opening means at each actuation said first movement means comprising an indexing wheel (40) provided with at least one recess (41) that receives a blister pack said recess being defined by a bottom wall (42) and an inner side wall (43) of said indexing wheel and by an outer side wall (420) formed on an added adjustment element (400) assembled on said indexing wheel.

No. of Pages : 20 No. of Claims : 9

(12) PATENT APPLICATION PUBLICATION
(19) INDIA
(22) Date of filing of Application :14/10/2014
(21) Application No.8584/DELNP/2014 A
(43) Publication Date : 22/05/2015

(54) Title of the invention : REMOTE ACTUATION OF SAFETY DEVICE

(51) International classification :F16K17/40,F15B20/00,F16G11/12
(31) Priority Document No :13/438533
(32) Priority Date :03/04/2012
(33) Name of priority country :U.S.A.
(86) International Application No :PCT/US2013/035126
Filing Date :03/04/2013
(87) International Publication No :WO 2013/152107
(61) Patent of Addition to Application Number :NA
Filing Date :NA
(62) Divisional to Application Number :NA
Filing Date :NA

(71)**Name of Applicant :**
1)FIKE CORPORATION
Address of Applicant :704 South 10th Street Blue Springs Missouri 64015 U.S.A.
(72)**Name of Inventor :**
1)EIJKELENBERG Tom
2)JAKUS Guy
3)DOM Guido

(57) Abstract :
Two stage sequential operation protective assemblies are provided including a primary protective device (20) having an element (32) which shifts in response to operation thereof (preferably a rupturable burst member (35)) together with a secondary protective device (22). An actuating assembly (24) interconnects the primary and secondary protective devices (20 22) and has an actuating cable assembly (28) preferably including a cable (94) and a frangible component (86). In certain embodiments an operator (28) for the secondary device (22) may be provided which includes an actuator (106) carried by the cable (94). Upon operation of the primary protective device (20) the cable (94) and frangible component (86) are tensioned and translated in a first direction. The component (86) then severs which causes operation of the secondary protective device (22).

No. of Pages : 28 No. of Claims : 29

(12) PATENT APPLICATION PUBLICATION
(19) INDIA
(22) Date of filing of Application :16/10/2014
(21) Application No.8699/DELNP/2014 A
(43) Publication Date : 22/05/2015

(54) Title of the invention : SELF LUBRICATING SURFACES FOR FOOD PACKAGING AND FOOD PROCESSING EQUIPMENT

(51) International classification :B65D23/02,B08B17/06
(31) Priority Document No :61/614941
(32) Priority Date :23/03/2012
(33) Name of priority country :U.S.A.
(86) International Application No :PCT/US2012/042326
Filing Date :13/06/2012
(87) International Publication No :WO 2013/141888
(61) Patent of Addition to Application Number :NA
Filing Date :NA
(62) Divisional to Application Number :NA
Filing Date :NA

(71)**Name of Applicant :**
1)MASSACHUSETTS INSTITUTE OF TECHNOLOGY
Address of Applicant :77 Massachusetts Avenue Cambridge MA 02139 U.S.A.
(72)**Name of Inventor :**
1)SMITH Jonathan David
2)DHIMAN Rajeev
3)PAXSON Adam T.
4)LOVE Christopher J.
5)SOLOMON Brian R.
6)VARANASI Kripa K.

(57) Abstract :
An article having a liquid impregnated surface. The surface includes a matrix of solid features (124) (e.g. non toxic and/or edible features) spaced sufficiently close to stably contain a liquid (126) therebetween or therewithin wherein the liquid is non toxic and/or edible. The article may contain for example a food or other consumer product such as ketchup mustard or mayonnaise.

No. of Pages : 53 No. of Claims : 30

(12) PATENT APPLICATION PUBLICATION
(21) Application No.8740/DELNP/2014 A
(19) INDIA
(22) Date of filing of Application :17/10/2014
(43) Publication Date : 22/05/2015

(54) Title of the invention : METHOD AND APPARATUS FOR EVALUATING RESULTS OF GAZE DETECTION

(51) International classification :G06K9/00
(31) Priority Document No :12160878.0
(32) Priority Date :22/03/2012
(33) Name of priority country :EPO
(86) International Application No :PCT/EP2013/055953
Filing Date :21/03/2013
(87) International Publication No :WO 2013/139919
(61) Patent of Addition to Application Number :NA
Filing Date :NA
(62) Divisional to Application Number :NA
Filing Date :NA

(71)**Name of Applicant :**
1)SENSOMOTORIC INSTRUMENTS GESELLSCHAFT FR INNOVATIVE SENSORIK MBH
Address of Applicant :Warthestrae 21 14513 Teltow Germany
(72)**Name of Inventor :**
1)WILLIAMS Denis
2)HOFFMANN Jan

(57) Abstract :
The invention relates to a method and an apparatus for evaluating results of gaze detection wherein these results are present or are obtained in the form of information which defines for each of a multiplicity of successive times a viewing direction detected at this time and a focal point (12) identified thereby in a scene image (10) assigned to this time. For this purpose the invention provides for the following steps to be carried out: a temporal change in the viewing direction and/or the focal point (12) is evaluated in order to identify different viewing events which differ from one another by different speeds (v) of an eye movement wherein saccades (14) and fixations (16) and/or pursuit movements (15) are detected as different types of viewing events and the identified viewing events are classified according to the type thereof a period of time spanned by the times is divided into intervals in such a manner that an interval corresponding to a duration of the particular viewing event is assigned to each of the identified viewing events wherein at least some of these intervals each contain a sequence of a plurality of times precisely one of the times or a true subset of the times is selected in each case from each of the intervals (I,I) assigned to a fixation (16) or a pursuit movement (15) and for each of these selected times the focal point (12) identified in the scene image (10) assigned to the particular time is mapped to a position (13) corresponding to this focal point (12) in a reference image (11).

No. of Pages : 34 No. of Claims : 17

(12) PATENT APPLICATION PUBLICATION
(19) INDIA
(22) Date of filing of Application :11/08/2014
(21) Application No.6739/DELNP/2014 A
(43) Publication Date : 22/05/2015

(54) Title of the invention : INGENOL MEBUTATE IN COMBINATION WITH CRYOTHERAPY FOR THE TREATMENT OF ACTINIC KERATOSIS

(51) International classification :A61K31/22,A61K45/06,A61K9/00
(31) Priority Document No :61/591093
(32) Priority Date :26/01/2012
(33) Name of priority country :U.S.A.
(86) International Application No :PCT/EP2013/051435
Filing Date :25/01/2013
(87) International Publication No :WO 2013/110756
(61) Patent of Addition to Application Number :NA
Filing Date :NA
(62) Divisional to Application Number :NA
Filing Date :NA

(71)**Name of Applicant :**
1)LEO PHARMA A/S
Address of Applicant :Industriparken 55 DK 2750 Ballerup Denmark
2)LEO LABORATORIES LIMITED
(72)**Name of Inventor :**
1)SKOV Torsten

(57) Abstract :
The invention relates to the treatment of actinic keratosis (AK) lesions using sequential cryotherapy and field treatment with ingenol mebutate (e.g. PEP005 Gel).

No. of Pages : 22 No. of Claims : 12

(12) PATENT APPLICATION PUBLICATION
(19) INDIA
(22) Date of filing of Application :11/08/2014
(21) Application No.6740/DELNP/2014 A
(43) Publication Date : 22/05/2015

(54) Title of the invention : PROCESSES FOR THE PREPARATION OF (S) 1 (3 ETHOXY 4METHOXYPHENYL) 2 METHANESULFONYLETHYLAMINE

(51) International classification :C07C315/00,C07C315/04,C07C317/24
(31) Priority Document No :61/601226
(32) Priority Date :21/02/2012
(33) Name of priority country :U.S.A.
(86) International Application No :PCT/US2013/026780
Filing Date :20/02/2013
(87) International Publication No :WO 2013/126360
(61) Patent of Addition to Application Number :NA
Filing Date :NA
(62) Divisional to Application Number :NA
Filing Date :NA

(71)**Name of Applicant :**
1)CELGENE CORPORATION
Address of Applicant :86 Morris Avenue Summit NJ 07901 U.S.A.
(72)**Name of Inventor :**
1)VENKATESWARALU Jasti
2)RAJENDIRAN Chinnapillai
3)REDDY Nallamaddi Ravikumar
4)CONNOLLY Terrence Joseph
5)RUCHELMAN Alexander L.
6)ECKERT Jeffrey
7)FRANK Anthony Joseph

(57) Abstract :
Provided herein are new processes for the preparation of aminosulfone intermediates for the synthesis of 2 [l (3 ethoxy 4 methoxyphenyl) 2 methylsulfonylethyl] 4 acetylaminoisoindoline l 3 dione which is useful for preventing or treating diseases or conditions related to an abnormally high level or activity of TNF a. Further provided herein are processes for the commercial production of (S) l (3 ethoxy 4 methoxyphenyl) 2 methanesulfony lethy lamine.

No. of Pages : 42 No. of Claims : 40

(12) PATENT APPLICATION PUBLICATION
(19) INDIA
(22) Date of filing of Application :17/10/2014
(21) Application No.8754/DELNP/2014 A
(43) Publication Date : 22/05/2015

(54) Title of the invention : SYSTEMS AND METHODS FOR DETECTING FALLEN CONTAINERS SUITABLE FOR APPARATUS FOR AUTOMATED EVALUATION OF MICROORGANISM GROWTH IN TEST SAMPLES

(51) International classification	:G01N35/00,G01N35/02,G01N35/04
(31) Priority Document No	:61/617210
(32) Priority Date	:29/03/2012
(33) Name of priority country	:U.S.A.
(86) International Application No	:PCT/US2013/033814
Filing Date	:26/03/2013
(87) International Publication No	:WO 2013/148634
(61) Patent of Addition to Application Number	:NA
Filing Date	:NA
(62) Divisional to Application Number	:NA
Filing Date	:NA

(71)**Name of Applicant :**
1)BIOMERIEUX INC.
Address of Applicant :100 Rodolphe Street Durham NC 27712 U.S.A.
(72)**Name of Inventor :**
1)WILSON Mark
2)KNEBEL James
3)VIVET Thierry

(57) Abstract :
Methods systems computer program products apparatus and circuits are configured to detect fallen containers upstream or proximate an intake zone suitable for automated evaluation apparatus using different sensors including at least one lower sensor and at least one upper sensor which is positioned to project an optical signal at a height corresponding to a top portion of an upright container to thereby allow an increased reliability in detection of different orientations and positions of fallen containers. An optional second lower sensor may be used which is longitudinally spaced apart from the first lower sensor and the lower sensors can transmit optical signals across the container travel path that do not intersect.

No. of Pages : 58 No. of Claims : 31

(12) PATENT APPLICATION PUBLICATION
(19) INDIA
(22) Date of filing of Application :17/10/2014
(21) Application No.8755/DELNP/2014 A
(43) Publication Date : 22/05/2015

(54) Title of the invention : SPEED DETECTION DEVICE

(51) International classification :G01P3/42,B60L3/00,B60L15/40
(31) Priority Document No :2012083036
(32) Priority Date :30/03/2012
(33) Name of priority country :Japan
(86) International Application No :PCT/JP2013/057686
Filing Date :18/03/2013
(87) International Publication No:WO 2013/146428
(61) Patent of Addition to Application Number :NA
Filing Date :NA
(62) Divisional to Application Number :NA
Filing Date :NA

(71)**Name of Applicant :**
1)THE NIPPON SIGNAL CO. LTD.
Address of Applicant :5 1 Marunouchi 1 chome Chiyoda ku Tokyo 1006513 Japan
(72)**Name of Inventor :**
1)SAITO Keiichi

(57) Abstract :
This speed detection device that detects train speed on the basis of output signals from a tacho generator (1a) determines whether or not a tacho generator (1a) malfunction has occurred on the basis of the results of a comparison between: the train travel distance measured on the basis of output signals from the tacho generator (1a) mounted on the train; the train travel distance measured using a means other than the tacho generator (1a); and the distance information for up to the next prescribed ground facility (P1) obtained from a ground facility (P0).

No. of Pages : 25 No. of Claims : 7

(12) PATENT APPLICATION PUBLICATION
(19) INDIA
(22) Date of filing of Application :17/10/2014
(21) Application No.8756/DELNP/2014 A
(43) Publication Date : 22/05/2015

(54) Title of the invention : TRAIN CONTROL DEVICE

(51) International classification :B60L15/40
(31) Priority Document No :2012082603
(32) Priority Date :30/03/2012
(33) Name of priority country :Japan
(86) International Application No :PCT/JP2013/057685
Filing Date :18/03/2013
(87) International Publication No :WO 2013/146427
(61) Patent of Addition to Application Number :NA
Filing Date :NA
(62) Divisional to Application Number :NA
Filing Date :NA

(71)**Name of Applicant :**
1)THE NIPPON SIGNAL CO. LTD.
Address of Applicant :5 1 Marunouchi 1 chome Chiyoda ku Tokyo 1006513 Japan
(72)**Name of Inventor :**
1)SAITO Keiichi

(57) Abstract :
The present invention pertains to a train control device. This train control device sets an emergency braking pattern and a normal braking pattern as patterns for maximum speed corresponding to the distance to a stopping point and outputs a braking command if the speed of a train exceeds the maximum speed. If the maximum speed stipulated by the normal braking pattern decreases to a set speed the train control device holds the maximum speed for the normal braking pattern constant for a prescribed distance and then gradually reduces the maximum speed as the train approaches the stopping point for the emergency braking pattern. As a result entry of a train by a fixed point train stop position can be achieved and excessive output of emergency braking commands by the emergency braking pattern can be suppressed even if the fixed point train stop position during automatic train operation is more distant than the stopping point for the normal braking pattern.

No. of Pages : 23 No. of Claims : 9

(12) PATENT APPLICATION PUBLICATION
(21) Application No.8596/DELNP/2014 A
(19) INDIA
(22) Date of filing of Application :14/10/2014
(43) Publication Date : 22/05/2015

(54) Title of the invention : STORAGE SYSTEM AND STORAGE APPARATUS

(51) International classification :G06F11/10
(31) Priority Document No :NA
(32) Priority Date :NA
(33) Name of priority country :NA
(86) International Application No :PCT/JP2012/002937
Filing Date :27/04/2012
(87) International Publication No :WO 2013/160972
(61) Patent of Addition to Application Number :NA
Filing Date :NA
(62) Divisional to Application Number :NA
Filing Date :NA

(71)**Name of Applicant :**
1)HITACHI LTD.
Address of Applicant :6 6 Marunouchi 1 chome Chiyoda ku Tokyo 1008280 Japan
(72)**Name of Inventor :**
1)UEHARA Go
2)HOMMA Shigeo
3)NOBORIKAWA Yoshiyuki

(57) Abstract :
A storage system comprises a first controller and a plurality of storage devices. The Plurality of storage devices configure RAID each of which includes one or more non volatile memory chips providing storage space where data from a host computer is stored and a second controller coupled to the non volatile memory chips. In case where the first controller receives an update request to update first data to second data from the host computer the second controller in a first storage device of the storage devices is configured to store the second data in an area different from an area where the first data has been stored in the storage space of the first storage device; generate information that relates the first data and the second data; and generate an intermediate parity based on the first and the second data. The second controller in a second storage device of the storage devices that stores a first parity corresponding to the first data is configured to receive the intermediate parity generate a second parity based on the first parity and the intermediate parity and store the second parity in an area in the storage space of the second storage device. The second controller in the first storage device is configured to delete the information after the second parity is stored in the area in the storage space of the second storage device and set the area where the first data has been stored as a erase target area.

No. of Pages : 83 No. of Claims : 10

(12) PATENT APPLICATION PUBLICATION
(19) INDIA
(22) Date of filing of Application :17/10/2014
(21) Application No.8760/DELNP/2014 A
(43) Publication Date : 22/05/2015

(54) Title of the invention : MELT PROCESSABLE POLYAMIDE WITH HIGH MELTING TEMPERATURE

(51) International classification :C08G69/26,C08L77/06,C08G69/34
(31) Priority Document No :12169528.2
(32) Priority Date :25/05/2012
(33) Name of priority country :EPO
(86) International Application No :PCT/EP2013/060781
Filing Date :24/05/2013
(87) International Publication No :WO 2013/174995
(61) Patent of Addition to Application Number :NA
Filing Date :NA
(62) Divisional to Application Number :NA
Filing Date :NA

(71)**Name of Applicant :**
1)DSM IP ASSETS B.V.
Address of Applicant :Het Overloon 1 NL 6411 TE Heerlen Netherlands
(72)**Name of Inventor :**
1)RULKENS Rudy
2)NIJENHUIS Atze Jan

(57) Abstract :
The invention relates to a polyamide comprising units derived from: A. a diamine comprising in its structure at least one cyclohexane fragment according to Structure I in which the substituents are in the 1,4 trans position (Stucture I) with n a positive integer of at least 1 and the proviso that when n is 2 or higher the cyclohexane rings are connected to each other through the 1,4 trans position B. an aliphatic dicarboxylic acid with at least 13 carbon atoms and optionally comprising units derived from: C. one or more aliphatic dicarboxylic acids other than B D. one or more diamines other than A E. one or more monofunctional carboxylic acids or monofunctional amines F. one or more polyfunctional monomers comprising carboxylic acid and/or amine groups G. one or more lactams or corresponding amino acids. The invention further relates to a composition comprising such a polyamide and its uses.

No. of Pages : 18 No. of Claims : 11

(12) PATENT APPLICATION PUBLICATION
(19) INDIA
(22) Date of filing of Application :17/10/2014
(21) Application No.8761/DELNP/2014 A
(43) Publication Date : 22/05/2015

(54) Title of the invention : IRON SUPPLEMENTATION OF RICE KERNELS

(51) International classification :A23L1/10,A23L1/302,A23L1/303
(31) Priority Document No :12167060.8
(32) Priority Date :08/05/2012
(33) Name of priority country :EPO
(86) International Application No :PCT/EP2013/059331
Filing Date :06/05/2013
(87) International Publication No :WO 2013/167506
(61) Patent of Addition to Application Number :NA
Filing Date :NA
(62) Divisional to Application Number :NA
Filing Date :NA

(71)**Name of Applicant :**
1)DSM IP ASSETS B.V.
Address of Applicant :Het Overloon 1 NL 6411 Te Heerlen Netherlands
(72)**Name of Inventor :**
1)BULBARELLO Andrea
2)STEIGER Georg

(57) Abstract :
The present invention is directed to reconstituted rice kernels enriched with ferric pyrophosphate and citric acid and/or a citrate salt. It is also directed to the use of ferric pyrophosphate in combination with citric acid and/or a citrate salt to supplement reconstituted rice kernels with iron. Furthermore it is directed to a process to prepare reconstituted rice kernels enriched with iron.

No. of Pages : 21 No. of Claims : 15

(12) PATENT APPLICATION PUBLICATION
(19) INDIA
(22) Date of filing of Application :17/10/2014
(21) Application No.8762/DELNP/2014 A
(43) Publication Date : 22/05/2015

(54) Title of the invention : HYBRID ORGANIC INORGANIC NANO PARTICLES

(51) International classification :B01J13/18,A61K8/11,A61K9/50
(31) Priority Document No :12168870.9
(32) Priority Date :22/05/2012
(33) Name of priority country :EPO
(86) International Application No :PCT/EP2013/060274
Filing Date :17/05/2013
(87) International Publication No :WO 2013/174753
(61) Patent of Addition to Application Number :NA
Filing Date :NA
(62) Divisional to Application Number :NA
Filing Date :NA

(71)**Name of Applicant :**
1)DSM IP ASSETS B.V.
Address of Applicant :Het Overloon 1 NL 6411 TE Heerlen Netherlands
(72)**Name of Inventor :**
1)ARFSTEN Nanning Joerg
2)HABETS Roberto Arnoldus Dominicus Maria
3)DIJCK VAN Michael Alphonsus Cornelis Johannes

(57) Abstract :
The invention relates to a method of making hybrid organic inorganic core shell nano particles comprising the steps of a) providing colloidal organic particles comprising a synthetic polyampholyte as a template; b) adding at least one inorganic oxide precursor; and c) forming a shell layer from the precursor on the template to result in core shell nano particles. With this method it is possible to make colloidal organic template particles having an average particle size in the range of 10 to 300 nm; which size can be controlled by the comonomer composition of the polyampholyte and/or by selecting dispersion conditions. The invention also relates to organic inorganic or hollow inorganic core shell nano particles obtained with this method to compositions comprising such nano particles to different uses of said nano particles and compositions and to products comprising or made from said nano particles and compositions including anti reflective coatings and composite materials.

No. of Pages : 37 No. of Claims : 15

(12) PATENT APPLICATION PUBLICATION
(19) INDIA
(22) Date of filing of Application :14/10/2014
(21) Application No.8604/DELNP/2014 A
(43) Publication Date : 22/05/2015

(54) Title of the invention : COMPOUNDS AND METHODS FOR TREATING ABERRANT ADRENOCARTICAL CELL DISORDERS

(51) International classification :A61K31/17,A61K35/00,A61P5/38
(31) Priority Document No :61/614269
(32) Priority Date :22/03/2012
(33) Name of priority country :U.S.A.
(86) International Application No :PCT/US2013/031068
Filing Date :13/03/2013
(87) International Publication No :WO 2013/142214
(61) Patent of Addition to Application Number :NA
Filing Date :NA
(62) Divisional to Application Number :NA
Filing Date :NA

(71)**Name of Applicant :**
1)THE REGENTS OF THE UNIVERSITY OF MICHIGAN
Address of Applicant :Office Of Technology Transfer 1600 Huron Parkway 2nd Floor Ann Arbor MI 48109 2590 U.S.A.
2)ATTEROCOR INC.
(72)**Name of Inventor :**
1)HAMMER Gary
2)KERPPOLA Tom
3)KERPPOLA Raili

(57) Abstract :
Methods and compositions are provided for treatment of disorders associated with aberrant adrenal cortex cell beha o vior, including (but not limited to) treatment of adrenocortical carcinoma (ACC), Cushing s syndrome and/or pituitary ACTH excess (Cushing s Disease). Such methods involve administration of an effective amount N-(2,6-bis(l-methylethyl)phenyl)-N-((l-(4-(dimethylamino) phenyl)cyclopentyl)-methyl)urea hydrochloride to the patient.

No. of Pages : 73 No. of Claims : 28

(12) PATENT APPLICATION PUBLICATION
(19) INDIA
(22) Date of filing of Application :14/10/2014
(21) Application No.8605/DELNP/2014 A
(43) Publication Date : 22/05/2015

(54) Title of the invention : LIQUID DISPENSING DEVICE EQUIPPED WITH A REMOVABLE CAP

(51) International classification :B05B11/00,B05B11/02,B05B11/04
(31) Priority Document No :1252435
(32) Priority Date :19/03/2012
(33) Name of priority country :France
(86) International Application No :PCT/FR2013/050545
Filing Date :15/03/2013
(87) International Publication No :WO 2013/140069
(61) Patent of Addition to Application Number :NA
Filing Date :NA
(62) Divisional to Application Number :NA
Filing Date :NA

(71)**Name of Applicant :**
1)NEMERA LA VERPILLERE
Address of Applicant :20 avenue de la Gare F 38290 La Verpilliere France
(72)**Name of Inventor :**
1)PAINCHAUD Ga«tan
2)DECOCK Thierry
3)GREVIN Guillaume
4)JULIA Xavier
5)QUAGLIA Benjamin

(57) Abstract :
The invention relates to a device (10) for dispensing liquid comprising an opening (22,50) for dispensing liquid a pad (48) for absorbing residual liquid and a removable cap (16) comprising a shape in the immediate vicinity and opposite the dispensing opening (22,50) referred to as a shape (46) for expelling residual liquid configured to discharge the residual liquid toward the pad (48) when the cap (16) is mounted on the device (10).

No. of Pages : 38 No. of Claims : 19

(12) PATENT APPLICATION PUBLICATION
(19) INDIA
(22) Date of filing of Application :14/10/2014
(21) Application No.8606/DELNP/2014 A
(43) Publication Date : 22/05/2015

(54) Title of the invention : IMAGE PICKUP UNIT IMAGE PICKUP DEVICE AND IMAGE PICKUP CONTROL PROGRAM

(51) International classification	:H04N5/355,H01L27/146,H04N5/225
(31) Priority Document No	:2012082312
(32) Priority Date	:30/03/2012
(33) Name of priority country	:Japan
(86) International Application No	:PCT/JP2013/002148
Filing Date	:28/03/2013
(87) International Publication No	:WO 2013/145765
(61) Patent of Addition to Application Number	:NA
Filing Date	:NA
(62) Divisional to Application Number	:NA
Filing Date	:NA

(71)**Name of Applicant :**
1)NIKON CORPORATION
Address of Applicant :12 1 Yurakucho 1 chome Chiyoda ku Tokyo 1008331 Japan
(72)**Name of Inventor :**
1)TSUNAI Shiro

(57) Abstract :
When the amplification factor is lowered where the intensity of the incident light is strong and the amount of charge is large the signal that is read from regions of weak intensity of the incident light becomes weak. Contrariwise when the amplification factor is raised to accord with regions where the intensity of the incident light is weak the signal that is read from regions of high incident light intensity may become saturated. For this reason the dynamic range of an image pickup unit was restricted to a narrow range. Accordingly there is provided an image pickup unit comprising: an image pickup section including a first group containing one or more pixels and a second group containing one or more pixels different from the pixels constituting the first group; and a control section that outputs respective pixel signals by performing charge accumulation in the case of the first group in the period in which a single charge accumulation cycle is executed and in the case of the second group by performing charge accumulation for a number of charge accumulation cycles different from that in the case of the first group.

No. of Pages : 39 No. of Claims : 34

(12) PATENT APPLICATION PUBLICATION
(21) Application No.8766/DELNP/2014 A
(19) INDIA
(22) Date of filing of Application :17/10/2014
(43) Publication Date : 22/05/2015

(54) Title of the invention : IMAGE CAPTURING APPARATUS IMAGE CAPTURING METHOD AND PROGRAM

(51) International classification :G06T1/00,H04N5/232
(31) Priority Document No :2012096460
(32) Priority Date :20/04/2012
(33) Name of priority country :Japan
(86) International Application No :PCT/JP2013/061377
Filing Date :17/04/2013
(87) International Publication No :WO 2013/157570
(61) Patent of Addition to Application Number :NA
Filing Date :NA
(62) Divisional to Application Number :NA
Filing Date :NA

(71)**Name of Applicant :**
1)FUJIFILM CORPORATION
Address of Applicant :26 30 Nishiazabu 2 chome Minato ku Tokyo 1068620 Japan
(72)**Name of Inventor :**
1)MASUDA Ken

(57) Abstract :
An image capturing apparatus extracts prescribed frequency components from image data of a newly captured photograph divides the frequency components into divided sections compares the frequency components of each of the divided sections of the newly captured photograph and frequency components of divided sections of a database corresponding to the divided sections of the newly captured photograph obtains a maximum vicinity area that is an area wherein the total number that components included in each of the frequency components match becomes maximum and replaces first extraction components which are a portion of components extracted from among frequency components outside the maximum vicinity area of each of the divided sections of the newly captured photograph with second extraction components which are a portion of components extracted from among frequency components outside the maximum vicinity area of the divided sections of the database corresponding to the divided sections of the newly captured photograph at positions of the frequency components of the newly captured photograph corresponding to the positions of the second extraction components.

No. of Pages : 31 No. of Claims : 18

(12) PATENT APPLICATION PUBLICATION
(19) INDIA
(22) Date of filing of Application :15/10/2014
(21) Application No.8619/DELNP/2014 A
(43) Publication Date : 22/05/2015

(54) Title of the invention : INFUSION DEVICE WITH SAFETY FEATURE FOR PREVENTING INADVERTENT ACTIVATION

(51) International classification :A61M5/32,A61M5/00
(31) Priority Document No :61/624214
(32) Priority Date :13/04/2012
(33) Name of priority country :U.S.A.
(86) International Application No :PCT/US2013/036391
Filing Date :12/04/2013
(87) International Publication No :WO 2013/155426
(61) Patent of Addition to Application Number :NA
Filing Date :NA
(62) Divisional to Application Number :NA
Filing Date :NA

(71)**Name of Applicant :**
1)BECTON DICKINSON AND COMPANY
Address of Applicant :Mark J. Schildkraut MC110 1 Becton Drive Franklin Lakes New Jersey 07417 U.S.A.
(72)**Name of Inventor :**
1)SCHNEIDER Jared
2)GUARRAIA Mark
3)BOYAVAL Margaux
4)SHAFER Ryan
5)CRONENBERG Richard

(57) Abstract :
A safety device for a wearable infusion device is disclosed. The safety device is configured to prevent accidental activation of the infusion device by protecting the activation button of the infusion device prior to and after the actuation of the activation button. The safety device includes a wall section that protrudes from the main body of the infusion device in the vicinity of the activation button. A cover device covers the activation button prior to the actuation of the activation button. The cover device slides on the main body of the infusion device. When the cover covers the activation button movement of the cover is restricted by the protruding wall section adjacent to the activation button to hold the cover in position over the activation button.

No. of Pages : 16 No. of Claims : 12

(12) PATENT APPLICATION PUBLICATION
(21) Application No.8620/DELNP/2014 A
(19) INDIA
(22) Date of filing of Application :15/10/2014
(43) Publication Date : 22/05/2015

(54) Title of the invention : AMBULATORY LUNG ASSIST DEVICE WITH IMPLANTED BLOOD PUMP AND OXYGENATOR

(51) International classification :A61M1/14
(31) Priority Document No :61/621291
(32) Priority Date :06/04/2012
(33) Name of priority country :U.S.A.
(86) International Application No :PCT/US2013/035484
Filing Date :05/04/2013
(87) International Publication No :WO 2013/152309
(61) Patent of Addition to Application Number :NA
Filing Date :NA
(62) Divisional to Application Number :NA
Filing Date :NA

(71)**Name of Applicant :**
1)HEARTWARE INC.
Address of Applicant :14420 NW 60th Avenue Miami Lakes FL 33014 U.S.A.
(72)**Name of Inventor :**
1)STRUEBER Martin

(57) Abstract :
The present disclosure provides a system for oxygenating blood. The system may include an implantable blood pump that may draw a supply of blood from the circulatory system of a mammalian subject such as a human being. The blood pump may provide the supply of blood to an adaptor where the supply of blood may be supplied to either or both of a first branch or second branch. The first branch may lead to an external blood oxygenator. The oxygenator may oxygenate the blood and the blood may be returned to the circulatory system of the mammalian subject. The second branch may bypass the oxygenator and may connect to the circulatory system of the mammalian subject. In this regard while the blood is supplied to the second branch the oxygenator may be disconnected and blood may be prevented from entering the first branch.

No. of Pages : 18 No. of Claims : 20

(12) PATENT APPLICATION PUBLICATION
(19) INDIA
(22) Date of filing of Application :15/10/2014
(21) Application No.8621/DELNP/2014 A
(43) Publication Date : 22/05/2015

(54) Title of the invention : NEEDLE INSERTION APPARATUS FOR A KNITTING MACHINE

(51) International classification :D04B35/00,D04B15/00,D04B15/28
(31) Priority Document No :1020120027968
(32) Priority Date :19/03/2012
(33) Name of priority country :Republic of Korea
(86) International Application No :PCT/KR2013/001187
Filing Date :15/02/2013
(87) International Publication No :WO 2013/141486
(61) Patent of Addition to Application Number :NA
Filing Date :NA
(62) Divisional to Application Number :NA
Filing Date :NA

(71)**Name of Applicant :**
1)SHIN Ick Hwan
Address of Applicant :(Yeouido dong Yeouido Sibeom Apt.) 18 125 45 63 ro Yeongdeungpo gu Seoul 150 761 Republic of Korea
(72)**Name of Inventor :**
1)SHIN Ick Hwan

(57) Abstract :
The present invention discloses a needle insertion apparatus for automatically inserting and mounting hundreds to thousands of needles into the slots of the cylinder of a knitting machine thereby improving the operation rate of the knitting machine. The present invention includes: a guide rail detachably mounted adjacent to the periphery of the cylinder having a plurality of slots arranged at a given pitch the needles being slidably mounted in the slots; and a needle insertion device mounted on the guide rail so as to move along the slots to automatically insert the needles into the slots. The needle insertion device includes: a casing unit for receiving a plurality of needles; a needle guide unit for guiding the foremost one of the needles held in the casing unit from the discharge position to the insertion position; and a needle push unit for pushing the needle guided by the needle guide unit into one of the slots of the cylinder.

No. of Pages : 19 No. of Claims : 10

(12) PATENT APPLICATION PUBLICATION
(21) Application No.8622/DELNP/2014 A
(19) INDIA
(22) Date of filing of Application :15/10/2014
(43) Publication Date : 22/05/2015

(54) Title of the invention : PASSIVE OPTICAL NETWORKS AND METHOD OF CONFIGURING TRANSMISSION WAVELENGTHS THEREIN

(51) International classification :H04J14/02
(31) Priority Document No :12167818.9
(32) Priority Date :14/05/2012
(33) Name of priority country :EPO
(86) International Application No :PCT/EP2012/060915
Filing Date :08/06/2012
(87) International Publication No :WO 2013/170907
(61) Patent of Addition to Application Number :NA
Filing Date :NA
(62) Divisional to Application Number :NA
Filing Date :NA

(71)**Name of Applicant :**
1)TELEFONAKTIEBOLAGET L M ERICSSON (PUBL)
Address of Applicant :SE 164 83 Stockholm Sweden
(72)**Name of Inventor :**
1)STRACCA Stefano
2)GIORGI Luca
3)PONZINI Filippo

(57) Abstract :
A method (10) of configuring transmission wavelengths in a passive optical network comprising a wavelength selective routing element between first and second locations. The method comprises: at a first location (A): a. iteratively generating and transmitting a first optical signal at different ones of a plurality of wavelengths until a second optical signal is received at the first location (12); and then b. ceasing transmission of the first optical signal (14) and then recommencing transmission of the first optical signal at the wavelength being transmitted when the second optical signal was received (16); and at a second location (B) remote from the first location: c. waiting until the first optical signal is received at the second location (18); d. iteratively generating and transmitting the second optical signal at different ones of a plurality of wavelengths until the first optical signal is no longer received (20) at the second location; and e. maintaining generation and transmission of the second optical signal at the wavelength being transmitted when the first optical signal was no longer received (22).

No. of Pages : 35 No. of Claims : 16

(12) PATENT APPLICATION PUBLICATION
(21) Application No.8617/DELNP/2014 A
(19) INDIA
(22) Date of filing of Application :15/10/2014
(43) Publication Date : 22/05/2015

(54) Title of the invention : COMBINING CHANNEL QUALITY MEASUREMENTS BASED ON SOUNDING REFERENCE SIGNALS AND DEMODULATION REFERENCE SIGNALS

(51) International classification :H04B7/04,H04B7/06
(31) Priority Document No :13/421055
(32) Priority Date :15/03/2012
(33) Name of priority country :U.S.A.
(86) International Application No :PCT/IB2013/052030
Filing Date :14/03/2013
(87) International Publication No :WO 2013/136293
(61) Patent of Addition to Application Number :NA
Filing Date :NA
(62) Divisional to Application Number :NA
Filing Date :NA

(71)**Name of Applicant :**
1)TELEFONAKTIEBOLAGET L M ERICSSON (PUBL)
Address of Applicant :16483 S 16483 Stockholm Sweden
(72)**Name of Inventor :**
1)PARK Chester

(57) Abstract :
Methods of operating a first communication node are disclosed. The first communication node communicates by multiple input multiple output (MJMO) wireless communications with a second communication node of a wireless communication system. The method includes receiving a Sounding Reference Signal (SRS) over a plurality of subcarriers transmitted by the second communication node for MIMO communications. Channel quality is measured responsive to the sounding reference signal to output a first channel quality value. A demodulation reference signal is received over a plurality of subcarriers transmitted by the second communication node for MIMO communications. Channel quality is measured responsive to the demodulation reference signal to output a second channel quality value. Reliability of the measurements of the first channel quality value and the second channel quality value is determined. The first channel quality value and the second channel quality value are combined while compensating for the determined reliability difference between the measurements to generate a combined channel quality value. Related communication nodes are disclosed.

No. of Pages : 43 No. of Claims : 21

(12) PATENT APPLICATION PUBLICATION
(21) Application No.8778/DELNP/2014 A
(19) INDIA
(22) Date of filing of Application :18/10/2014
(43) Publication Date : 22/05/2015

(54) Title of the invention : EPITOPES OF EPIDERMAL GROWTH FACTOR RECEPTOR SURFACE ANTIGEN AND USE THEREOF

(51) International classification	:A61K38/17,A61K38/16,A61K39/395
(31) Priority Document No	:61/616073
(32) Priority Date	:27/03/2012
(33) Name of priority country	:U.S.A.
(86) International Application No	:PCT/KR2013/002550
Filing Date	:27/03/2013
(87) International Publication No	:WO 2013/147509
(61) Patent of Addition to Application Number	:NA
Filing Date	:NA
(62) Divisional to Application Number	:NA
Filing Date	:NA

(71)**Name of Applicant :**
1)GREEN CROSS CORPORATION
Address of Applicant :303 Bojeong dong Giheung gu Yongin si Gyeonggi do 446 770 Republic of Korea
2)MOGAM BIOTECHNOLOGY RESEARCH INSTITUTE
(72)**Name of Inventor :**
1)KIM Se Ho
2)HONG Kwang Won
3)CHANG Ki Hwan
4)KIM Min Soo
5)LEE Mi Jung
6)WON Jong Hwa
7)HUR Min Kyu
8)CHO Hyun soo
9)YOO Ji Ho

(57) Abstract :
The present invention relates to epitopes of the epidermal growth factor receptor (EGFR) and the use thereof. The epitopes provided by the present invention are highly preserved and located in the domain closely related to binding with an epidermal growth factor (EGF). Therefore vaccine compositions comprising the epitopes or compositions comprising antibodies to the epitopes may efficiently block a signal transduction caused by binding of EGF and EGRF and thus can be highly valuably used in treating various diseases such as cancer. An antibody bound to the epitopes of the present invention may efficiently inhibit binding of various EGFR ligands such as not only EGF but also TGF a AR BTC EPR and HB EGF with EGFR and therefore can be used in treating various diseases resulting from an activation of EGFR caused by binding not only with EGF but also with other EGFR ligands.

No. of Pages : 54 No. of Claims : 29

(12) PATENT APPLICATION PUBLICATION
(19) INDIA
(22) Date of filing of Application :18/10/2014
(21) Application No.8779/DELNP/2014 A
(43) Publication Date : 22/05/2015

(54) Title of the invention : ROLLER CRUSHER AND METHOD OF PROTECTING A ROLLER CRUSHER FROM UNCRUSHABLE OBJECTS

(51) International classification :B02C4/32,B02C23/04
(31) Priority Document No :13/451895
(32) Priority Date :20/04/2012
(33) Name of priority country :U.S.A.
(86) International Application No :PCT/IB2013/053101
Filing Date :19/04/2013
(87) International Publication No :WO 2013/156970
(61) Patent of Addition to Application Number :NA
Filing Date :NA
(62) Divisional to Application Number :NA
Filing Date :NA

(71)**Name of Applicant :**
1)METSO MINERALS INDUSTRIES INC.
Address of Applicant :20965 Crossroads Circle Waukesha Wisconsin 53186 U.S.A.
(72)**Name of Inventor :**
1)REZNITCHENKO Vadim
2)HARBOLD Keith

(57) Abstract :
A method of protecting a roller crusher (1) having two rollers (2) separated by a gap (3) from uncrushable objects (T) is disclosed. The method comprises the steps of: detecting an uncrushable object (T) in an in feed stream of material (M) opening a gap(3)between said rollers to a by pass width which is significantly larger than an operational width such that said uncrushable object is permitted to pass through said gap (3) restricting an in feed (4) to said gap (3) such that material is fed to said gap (3) at a restricted in feed rate determining that said uncrushable object(T)has passed through said gap (3) reducing said gap (3) to said operational width and opening said in feed (4) to said gap (3) such that material (M) is fed to said gap (3) at an operational in feed rate.A roller crusher (1) having a protective system for protecting the roller crusher(1) from uncrushable objects (T)is also disclosed.

No. of Pages : 17 No. of Claims : 15

(12) PATENT APPLICATION PUBLICATION
(19) INDIA
(22) Date of filing of Application :31/01/2012
(21) Application No.878/DELNP/2012 A
(43) Publication Date : 22/05/2015

(54) Title of the invention : A NUTRITIONAL COMPOSITION COMPRISING LACTOCOCCUS STRAINS AND REDUCING ALLERGY SYMPTOMS, ESPECIALLY IN INFANTS AND CHILDREN

(51) International classification :A23L 1/29
(31) Priority Document No :09168053.8
(32) Priority Date :18/08/2009
(33) Name of priority country :EPO
(86) International Application No :PCT/EP2010/061803
Filing Date :13/08/2010
(87) International Publication No :WO 2011/020780
(61) Patent of Addition to Application Number :NA
Filing Date :NA
(62) Divisional to Application Number :NA
Filing Date :NA

(71)**Name of Applicant :**
1)NESTEC S.A.
Address of Applicant :AVENUE NESTLE 55, CH-1800 VEVEY, SWITZERLAND
(72)**Name of Inventor :**
1)HOLVOET, SEBASTIEN
2)MERCENTER, ANNICK
3)ZUERCHER, ADRIAN
4)SINGH, ANURAG

(57) Abstract :
A complete nutritional composition comprising Lactococcus strains or probiotic is provided for reducing the symptoms of allergies in different groups of patients such as allergies originating from food allergens in young children or infants and respiratory allergens in children,adults and household pets. Preferably the composition reduces symptoms of allergies (secondary prevention) while not significantly affecting sensitization (primary prevention). The composition comprises a probiotic of the genus Lactococcus.

No. of Pages : 52 No. of Claims : 21

(12) PATENT APPLICATION PUBLICATION
(19) INDIA
(22) Date of filing of Application :15/10/2014
(21) Application No.8632/DELNP/2014 A
(43) Publication Date : 22/05/2015

(54) Title of the invention : DIQUAFOSOL CONTAINING EYE DROP

(51) International classification :A61K31/7084,A61K9/08,A61K47/04
(31) Priority Document No :2012069157
(32) Priority Date :26/03/2012
(33) Name of priority country :Japan
(86) International Application No :PCT/JP2013/058519
Filing Date :25/03/2013
(87) International Publication No :WO 2013/146649
(61) Patent of Addition to Application Number :NA
Filing Date :NA
(62) Divisional to Application Number :NA
Filing Date :NA

(71)**Name of Applicant :**
1)SANTEN PHARMACEUTICAL CO. LTD.
Address of Applicant :9 19 Shimoshinjo 3 chome Higashiyodogawa ku Osaka shi Osaka 5338651 Japan
(72)**Name of Inventor :**
1)SAKATANI Akiko
2)IKEI Tatsuo
3)INAGAKI Koji
4)NAKAMURA Masatsugu
5)HOSOI Kazuhiro
6)SAITO Mikiko
7)SONODA Masaki
8)FUKUI Yoko
9)KUWANO Mitsuaki

(57) Abstract :
In a diquafosol eye drop containing a chelating agent at a concentration of 0.0001 to 1% (w/v) the production of insoluble precipitates during storage which is usually observed in a diquafosol eye drop and the deterioration in filtering performane during a production process (a filter sterilization process) can be prevented. In a diquafosol eye drop containing a chelating agent the reduction in eye irritation and the improvement in preservative efficacy compared with those in a diquafosol eye drop that does not contain any chelating agent are observed. Therefore in the present invention stable physicochemical properties can be achieved during the course of production and distribution and during the course of storage by a patient and the reduction in eye irritation and the improvement in preservative efficacy are observed. Particularly in a diquafosol eye drop containing a chelating agent the deterioration in filtering performance during a production process (a filter sterilization process) is prevented. Therefore highly efficient filter sterilization can be achieved during the course of production which contributes to the reduction in production cost.

No. of Pages : 33 No. of Claims : 15

(12) PATENT APPLICATION PUBLICATION
(19) INDIA
(22) Date of filing of Application :15/10/2014
(21) Application No.8633/DELNP/2014 A
(43) Publication Date : 22/05/2015

(54) Title of the invention : PHENYL UREA AND PHENYL CARBAMATE DERIVATIVES AS INHIBITORS OF PROTEIN AGGREGATION

(51) International classification :A61K31/17,A61K31/27
(31) Priority Document No :61/616771
(32) Priority Date :28/03/2012
(33) Name of priority country :U.S.A.
(86) International Application No :PCT/US2013/032552
Filing Date :15/03/2013
(87) International Publication No :WO 2013/148365
(61) Patent of Addition to Application Number :NA
Filing Date :NA
(62) Divisional to Application Number :NA
Filing Date :NA

(71)**Name of Applicant :**
1)NEUROPORE THERAPIES INC.
Address of Applicant :10835 Road to the Cure Suite 210 San Diego CA 92121 U.S.A.
(72)**Name of Inventor :**
1)WRASIDLO Wolfgang

(57) Abstract :
The present invention relates to certain phenyl urea and phenyl carbamate derivatives pharmaceutical compositions containing them and methods of using them including methods for preventing reversing slowing or inhibiting protein aggregation and methods of treating diseases that are associated with protein aggregation including neurodegenerative diseases such as Parkinson s disease Alzheimer s disease Lewy body disease and multiple system atrophy.

No. of Pages : 55 No. of Claims : 20

(12) PATENT APPLICATION PUBLICATION
(19) INDIA
(22) Date of filing of Application :20/10/2014
(21) Application No.8782/DELNP/2014 A
(43) Publication Date : 22/05/2015

(54) Title of the invention : ELECTRODE PLATE AND ELECTRODE ASSEMBLY STORAGE BATTERY AND CAPACITOR COMPRISING ELECTRODE PLATE

(51) International classification :H01M4/02,H01M4/14,H01M10/12
(31) Priority Document No :201210082733.5
(32) Priority Date :26/03/2012
(33) Name of priority country :China
(86) International Application No :PCT/CN2013/072698
Filing Date :15/03/2013
(87) International Publication No :WO 2013/143399
(61) Patent of Addition to Application Number :NA
Filing Date :NA
(62) Divisional to Application Number :NA
Filing Date :NA

(71)**Name of Applicant :**
1)SHANGHAI ZULI NEW ENERGY TECHNOLOGY CO. LTD.
Address of Applicant :No.2 Lane 31 Shitai Road Baoshan district Shanghai 200942 China
(72)**Name of Inventor :**
1)YU Hejun

(57) Abstract :
An electrode plate and an electrode assembly a storage battery and a capacitor comprising the electrode plate are provided. The electrode plate consists of at least two positive plates or at least two negative plates and an insulating film sandwiched between the at least two positive plates or the at least two negative plates. The electrode plate can improve the electric field intensity and the charging time of the storage battery comprising the electrode plate is greatly reduced when compared with that of a battery with an existing structure.

No. of Pages : 25 No. of Claims : 11

(12) PATENT APPLICATION PUBLICATION
(19) INDIA
(22) Date of filing of Application :20/10/2014
(21) Application No.8783/DELNP/2014 A
(43) Publication Date : 22/05/2015

(54) Title of the invention : PROCESS FOR PRODUCING LOW ENDOTOXIN CHITOSAN

(51) International classification :C08B37/08,C08L5/08
(31) Priority Document No :1205174.4
(32) Priority Date :23/03/2012
(33) Name of priority country :U.K.
(86) International Application No :PCT/GB2013/050775
Filing Date :25/03/2013
(87) International Publication No :WO 2013/140190
(61) Patent of Addition to Application Number :NA
Filing Date :NA
(62) Divisional to Application Number :NA
Filing Date :NA

(71)**Name of Applicant :**
1)MEDTRADE PRODUCTS LIMITED
Address of Applicant :Electra House Crewe Business Park Crewe Cheshire CW1 6GL U.K.
(72)**Name of Inventor :**
1)GLADMAN June
2)HARDY Craig
3)HOGGARTH Andrew

(57) Abstract :
The present invention relates to a process for producing a low endotoxin alkali chitosan and also to a process for producing low endotoxin neutral chitosan chitosan salt and chitosan derivatives and to the products of such processes. The process comprises contacting chitosan with an alkali solution to form a mixture and leaving the mixture for at least about 12 hours. The low endotoxin alkali chitosan may be used in the manufacture of other useful chitosan based products.

No. of Pages : 42 No. of Claims : 42

(12) PATENT APPLICATION PUBLICATION
(21) Application No.8784/DELNP/2014 A
(19) INDIA
(22) Date of filing of Application :20/10/2014
(43) Publication Date : 22/05/2015

(54) Title of the invention : CONFIGURATION OF COORDINATED MULTIPOINT TRANSMISSION HYPOTHESES FOR CHANNEL STATE INFORMATION REPORTING

(51) International classification :H04L1/00,H04L5/00
(31) Priority Document No :61/612920
(32) Priority Date :19/03/2012
(33) Name of priority country :U.S.A.
(86) International Application No :PCT/SE2013/050235
Filing Date :13/03/2013
(87) International Publication No :WO 2013/141781
(61) Patent of Addition to Application Number :NA
Filing Date :NA
(62) Divisional to Application Number :NA
Filing Date :NA

(71)**Name of Applicant :**
1)TELEFONAKTIEBOLAGET L M ERICSSON (PUBL)
Address of Applicant :SE 164 83 Stockholm Sweden
(72)**Name of Inventor :**
1)HAMMARWALL David
2)J–NGREN George
3)BERGMAN Svante

(57) Abstract :
A system and method for providing an eNodeB (18) with the flexibility to configure a Channel State Information (CSI) report to match a specific Coordinated Multipoint (CoMP) transmission hypothesis which is a candidate for a downlink transmission to a User Equipment (UE) (20) is disclosed. A UE (20) receives from the eNodeB (18) a configuration message that specifies a CSI report. The CSI report is specified by a particular interference hypothesis and a particular desired signal hypothesis corresponding to data transmission over at least one effective channel characterized by a specific reference signal. The UE (20) estimates interference according to the interference hypothesis and/or estimates at least one effective channel by performing measurements on the specific reference signal and determines a CSI report based on the interference estimation and on the estimated effective channel. The UE (20) also transmits the CSI report to the eNodeB (18).

No. of Pages : 60 No. of Claims : 42

(12) PATENT APPLICATION PUBLICATION
(19) INDIA
(22) Date of filing of Application :15/10/2014
(21) Application No.8644/DELNP/2014 A
(43) Publication Date : 22/05/2015

(54) Title of the invention : PACKAGING CONSTRUCTION AND METHOD FOR MANUFACTURING SAID PACKAGING CONSTRUCTION

(51) International classification :B65D3/22,B32B1/02,B65D5/18
(31) Priority Document No :NA
(32) Priority Date :NA
(33) Name of priority country :NA
(86) International Application No :PCT/SE2012/050321
Filing Date :22/03/2012
(87) International Publication No :WO 2013/141769
(61) Patent of Addition to Application Number :NA
Filing Date :NA
(62) Divisional to Application Number :NA
Filing Date :NA

(71)**Name of Applicant :**
1)SCA FOREST PRODUCTS AB
Address of Applicant :S 851 88 Sundsvall Sweden
(72)**Name of Inventor :**
1)VISTR–M Magnus
2)H„GGLUND Rickard
3)–STERBERG Folke

(57) Abstract :
The invention relates to a packaging construction (1) being formed by multi layer board material (6) comprising a middle layer (8) a first outer layer (7) attached to the middle layer (8) and a second outer layer (9) attached to the middle layer (8) said packaging construction (1) defining a bottom side (3) a top side (2) and a plurality of side panels (4) joining said bottom side (3) and said top side (2) so as to form a closed structure wherein at least one edge (14) is defined between adjacent side panels (4). The invention is arranged so that the second outer layer (9) has a lower bending stiffness according to ISO 5628 than the first outer layer (7) such that said board (6) is outwardly bendable only in a direction towards which the second layer (9) faces and in that said packaging construction (1) is formed with at least one side panel (4) being curved and/or at least one edge (14) being rounded.

No. of Pages : 44 No. of Claims : 25

(12) PATENT APPLICATION PUBLICATION
(19) INDIA
(22) Date of filing of Application :15/10/2014
(21) Application No.8645/DELNP/2014 A
(43) Publication Date : 22/05/2015

(54) Title of the invention : APPARATUS AND METHOD FOR DISINFECTION OF PACKAGED ARTICLES

(51) International classification :B65B55/02,A61L2/14,A61L2/03
(31) Priority Document No :1205611.5
(32) Priority Date :29/03/2012
(33) Name of priority country :U.K.
(86) International Application No :PCT/GB2013/050810
Filing Date :27/03/2013
(87) International Publication No :WO 2013/144627
(61) Patent of Addition to Application Number :NA
Filing Date :NA
(62) Divisional to Application Number :NA
Filing Date :NA

(71)**Name of Applicant :**
1)OZONICA LIMITED
Address of Applicant :5 Giffard Court Millbrook Close Northampton Northamptonshire NN5 5JF U.K.
(72)**Name of Inventor :**
1)SNOWBALL Malcolm Robert

(57) Abstract :
A packet steriliser for sterilising packaged articles (110) comprising: a working surface arranged for receiving a packaged article to be sterilised; a first electrode and a second electrode (104,106); wherein the first electrode and the second electrode extend behind a portion of the area of the working surface and the first electrode is disposed between the second electrode and the working surface and the first electrode comprises a plurality of gaps arranged so that in use when a voltage difference is applied between the first electrode and the second electrode the associated electric field is able to extend through the gaps beyond the working surface and into a package of said packaged article to be sterilised wherein the first electrode and the second electrode comprise adjacent extended surfaces which lie substantially along the direction of the working surface that provides a capacitance (120) related to the adjacent spatial extent of the first electrode and the second electrode and an inductance (118) is provided wherein the inductance is selected based on that spatial extent to modify the resonant frequency of the electrode arrangement.

No. of Pages : 32 No. of Claims : 29

(12) PATENT APPLICATION PUBLICATION
(19) INDIA
(22) Date of filing of Application :20/10/2014
(21) Application No.8791/DELNP/2014 A
(43) Publication Date : 22/05/2015

(54) Title of the invention : HEAT EXCHANGE TUBE ATTACHED WITH ALUMINUM ALLOY INNER GROOVE

(51) International classification :F28F21/08,C23C10/30,C23C10/60
(31) Priority Document No :2012092193
(32) Priority Date :13/04/2012
(33) Name of priority country :Japan
(86) International Application No :PCT/JP2013/059747
Filing Date :29/03/2013
(87) International Publication No :WO 2013/153972
(61) Patent of Addition to Application Number :NA
Filing Date :NA
(62) Divisional to Application Number :NA
Filing Date :NA

(71)**Name of Applicant :**
1)UACJ CORPORATION
Address of Applicant :1 7 2 Otemachi Chiyoda ku Tokyo 1000004 Japan
(72)**Name of Inventor :**
1)OYA Yoshiyuki
2)WAKAGURI Satoshi
3)HARA Yasuhito
4)ISHIDA Kouichi
5)KOJIMA Yoichi

(57) Abstract :
Disclosed is a heat exchange tube that has excellent hairpin bending workability generates little fin crushing and has excellent corrosion resistance. Provided is the heat exchange tube attached with an aluminum alloy inner groove that has a plurality of ridge type fins formed therein contains 0.8 to 1.8 percentage by mass of Mn (hereinafter percentage by mass is referred to as %) 0.3% to 0.8% of Cu and 0.02% to 0.2% of Si. The remnant is formed from Al and unavoidable impurities and the average grain size of the molded article is 150μm or less.

No. of Pages : 29 No. of Claims : 8

(12) PATENT APPLICATION PUBLICATION
(19) INDIA
(22) Date of filing of Application :20/10/2014
(21) Application No.8793/DELNP/2014 A
(43) Publication Date : 22/05/2015

(54) Title of the invention : SKIN CANCER BIOMARKER DETECTION BY INFRARED SPECTROSCOPY

(51) International classification :A61B5/00,G01N21/35,G01N33/483
(31) Priority Document No :61/612294
(32) Priority Date :23/03/2012
(33) Name of priority country :U.S.A.
(86) International Application No :PCT/EE2013/000003
Filing Date :23/03/2013
(87) International Publication No :WO 2013/139348
(61) Patent of Addition to Application Number :NA
Filing Date :NA
(62) Divisional to Application Number :NA
Filing Date :NA

(71)**Name of Applicant :**
1)MC PROFESSIONAL LTD.
Address of Applicant :Voistluse 23 35 Tallinn 10132 Estonia
2)IR CLINICAL CANCER DIAGNOSTICS LTD.
(72)**Name of Inventor :**
1)EIKJE Natalja

(57) Abstract :
The present invention relates to a method for detection in IR (infrared) spectra of human epidermal skin tissue the presence of the multiplet around 1055 cm i.e. the ratio of intensity of the nucleic acids bands DNA and RNA indicative for prognosis diagnosis and prediction of epidermal skin cancers and precancers. Detection of the multiplet together with patterned appearance of DNA/RNA triad peaks at about 1071 1084/1085 and 1095 cm additionally indicates relation to certain types of tumour and malignancy also indicating progression of malignancy and progression towards malignancy.

No. of Pages : 34 No. of Claims : 12

(12) PATENT APPLICATION PUBLICATION
(21) Application No.8669/DELNP/2014 A
(19) INDIA
(22) Date of filing of Application :16/10/2014
(43) Publication Date : 22/05/2015

(54) Title of the invention : HIGH PERFORMANCE TOOLS EXHIBITING REDUCED CRATER WEAR IN PARTICULAR BY DRY MACHINING OPERATIONS

(51) International classification :C23C14/02,C23C14/06,C23C14/32
(31) Priority Document No :61/624487
(32) Priority Date :16/04/2012
(33) Name of priority country :U.S.A.
(86) International Application No :PCT/EP2013/001098
Filing Date :15/04/2013
(87) International Publication No :WO 2013/156131
(61) Patent of Addition to Application Number :NA
Filing Date :NA
(62) Divisional to Application Number :NA
Filing Date :NA

(71)**Name of Applicant :**
1)OERLIKON TRADING AG TRBBACH
Address of Applicant :Hauptstrasse 53 CH 9477 Tr¼bbach Switzerland
(72)**Name of Inventor :**
1)ARND Mirjam
2)LECHTHALER Markus
3)STEIN Sebastian
4)ERIKSSON Anders Olof

(57) Abstract :
The present invention relates to a coating system comprising at least one multi layered film formed of alternated A and B nanolayers deposited one on each other characterized in that the A nanolayers contain essentially aluminium chromium boron nitride and the B nanolayers contain essentially aluminium chromium nitride.

No. of Pages : 18 No. of Claims : 15

(12) PATENT APPLICATION PUBLICATION
(21) Application No.8797/DELNP/2014 A
(19) INDIA
(22) Date of filing of Application :20/10/2014
(43) Publication Date : 22/05/2015

(54) Title of the invention : RAILWAY VEHICLE BOGIE

(51) International classification :B61F5/06,B61F3/06
(31) Priority Document No :2012104422
(32) Priority Date :01/05/2012
(33) Name of priority country :Japan
(86) International Application No :PCT/JP2013/061100
Filing Date :12/04/2013
(87) International Publication No :WO 2013/164944
(61) Patent of Addition to Application Number :NA
Filing Date :NA
(62) Divisional to Application Number :NA
Filing Date :NA

(71)**Name of Applicant :**
1)KAWASAKI JUKOGYO KABUSHIKI KAISHA
Address of Applicant :1 1 Higashikawasaki cho 3 chome Chuo ku Kobe shi Hyogo 6508670 Japan
(72)**Name of Inventor :**
1)SATO Yoshi
2)SAKAMOTO Junichi

(57) Abstract :
A railway vehicle bogie (101) has bolster springs (130) disposed between the railway vehicle bogie (101) and the railway vehicle body (180). The railway vehicle bogie (101) is provided with a pair of side beams (110) having recesses (111) for receiving the bolster springs. Each of the side beams (110) has a side beam outer wall (112) a side beam inner wall (113) a side beam lower wall (114) and a side beam upper wall (115) which has formed therein openings (115a) from which the received bolster springs protrude. Each of the recesses is formed from the side beam outer wall the side beam inner wall and the side beam lower wall and receives the bolster springs through the openings.

No. of Pages : 32 No. of Claims : 6

(12) PATENT APPLICATION PUBLICATION
(19) INDIA
(22) Date of filing of Application :20/10/2014
(21) Application No.8798/DELNP/2014 A
(43) Publication Date : 22/05/2015

(54) Title of the invention : WORKING FLUID COMPOSITION FOR REFRIGERATOR

(51) International classification :C10M169/04,C09K5/04,C10M105/18
(31) Priority Document No :2012076298
(32) Priority Date :29/03/2012
(33) Name of priority country :Japan
(86) International Application No :PCT/JP2013/059316
Filing Date :28/03/2013
(87) International Publication No :WO 2013/147048
(61) Patent of Addition to Application Number :NA
Filing Date :NA
(62) Divisional to Application Number :NA
Filing Date :NA

(71)**Name of Applicant :**
1)JX NIPPON OIL & ENERGY CORPORATION
Address of Applicant :6 3 Otemachi 2 chome Chiyoda ku Tokyo 1008162 Japan
(72)**Name of Inventor :**
1)SAITO Masanori
2)SAWADA Ken
3)SHIMPO Hiroko
4)ADEGAWA Kuniko

(57) Abstract :
This working fluid composition for a refrigerator contains: a mixed refrigerant indicated by general formula (A) and containing hydrofluoroethane difluoromethane and tetrafluoropropene; and a refrigerant oil containing as a base oil at least one type selected from polyol ester polyvinyl ether and a polyalkylene glycol compound said base oil having a carbon/oxygen molar ratio of 2.5 5.8. CHF (A)(in the formula n indicates 1 or 2.)

No. of Pages : 51 No. of Claims : 7

(12) PATENT APPLICATION PUBLICATION
(19) INDIA
(22) Date of filing of Application :20/10/2014
(21) Application No.8799/DELNP/2014 A
(43) Publication Date : 22/05/2015

(54) Title of the invention : COSMETIC COMPOSITION AND CONDITIONING AGENT

(51) International classification :A61K8/34,A61K8/41,A61Q5/12
(31) Priority Document No :2012096780
(32) Priority Date :20/04/2012
(33) Name of priority country :Japan
(86) International Application No :PCT/US2013/036925
Filing Date :17/04/2013
(87) International Publication No:WO 2013/158733
(61) Patent of Addition to Application Number :NA
Filing Date :NA
(62) Divisional to Application Number :NA
Filing Date :NA

(71)**Name of Applicant :**
1)THE PROCTER & GAMBLE COMPANY
Address of Applicant :One Procter & Gamble Plaza Cincinnati Ohio 45202 U.S.A.
(72)**Name of Inventor :**
1)UEHARA Nobuaki
2)YODA Shoya
3)ISHIKUBO Akira

(57) Abstract :
Disclosed is a cosmetic composition comprising: a copolymer (a) or (); a cationic surfactant; and a higher alcohol. The copolymer (a) includes a constituent unit derived from a monomer (a) acrylic acid and/or methacrylic acid and at least one constituent unit derived from three different monomers wherein from 50 to 100 mass% of a constituent unit derived from a vinyl monomer (A) having a carboxyl group. The copolymer () includes a constituent unit derived from a monomer (a) acrylic acid and/or methacrylic acid and at least one constituent unit derived from four different monomers wherein from 50 to 100 mass% of a constituent unit derived from a vinyl monomer (A) having a carboxyl group and wherein from 50 to 100 mol% of the carboxyl groups are not neutralized.

No. of Pages : 53 No. of Claims : 17

(12) PATENT APPLICATION PUBLICATION
(19) INDIA
(22) Date of filing of Application :20/10/2014
(21) Application No.8800/DELNP/2014 A
(43) Publication Date : 22/05/2015

(54) Title of the invention : REFRIGERATOR WORKING FLUID COMPOSITION AND REFRIGERANT OIL

(51) International classification :C10M137/04,C09K5/04,C10M101/02
(31) Priority Document No :2012077011
(32) Priority Date :29/03/2012
(33) Name of priority country :Japan
(86) International Application No :PCT/JP2013/059101
Filing Date :27/03/2013
(87) International Publication No :WO 2013/146924
(61) Patent of Addition to Application Number :NA
Filing Date :NA
(62) Divisional to Application Number :NA
Filing Date :NA

(71)**Name of Applicant :**
1)JX NIPPON OIL & ENERGY CORPORATION
Address of Applicant :6 3 Otemachi 2 chome Chiyoda ku Tokyo 1008162 Japan
(72)**Name of Inventor :**
1)SAITO Masanori
2)NARA Fumiyuki
3)MATSUMOTO Tomonari
4)ADEGAWA Kuniko

(57) Abstract :
A working fluid composition for a refrigerator containing a C2 4 hydrocarbon refrigerant and a refrigerant oil. The refrigerant oil contains at least one type of phosphorous compound selected from: a mono (alkylphenyl) diphenyl phosphate having at least one type of lubricating base oil selected from a mineral oil and a synthetic oil and one C3 5 alkyl group; and a di (alkylphenyl) phenyl phosphate having two C3 5 alkyl groups. The phosphorous compound content is 0.01% 5% by mass relative to the total amount of refrigerant oil.

No. of Pages : 24 No. of Claims : 6

(12) PATENT APPLICATION PUBLICATION
(19) INDIA
(22) Date of filing of Application :16/10/2014
(21) Application No.8664/DELNP/2014 A
(43) Publication Date : 22/05/2015

(54) Title of the invention : METHOD FOR INCREASING THE SECRETION OF RECOMBINANT PROTEINS

(51) International classification :C12N15/82,C12P21/02,C12N5/00
(31) Priority Document No :12164458.7
(32) Priority Date :17/04/2012
(33) Name of priority country :EPO
(86) International Application No :PCT/EP2013/057956
Filing Date :17/04/2013
(87) International Publication No :WO 2013/156504
(61) Patent of Addition to Application Number :NA
Filing Date :NA
(62) Divisional to Application Number :NA
Filing Date :NA

(71)**Name of Applicant :**
1)GREENOVATION BIOTECH GMBH
Address of Applicant :Hans Bunte Strasse 19 79108 Freiburg Germany
(72)**Name of Inventor :**
1)JOST Wolfgang
2)KNAPPENBERGER Mathias
3)CLAUSSNITZER Doreen
4)SCHAAF Andreas

(57) Abstract :
The invention relates to a method for producing a recombinant protein in cells with a cell wall comprising the step of increasing the secretion of the recombinant protein through the cell wall by expression of the protein in the cells in a culture medium containing a combination of a surface active polymer and monovalent metal ions and with an osmolarity at least 0.32 osmol/L said invention further relating to culture media and nutrient mixtures for the method.

No. of Pages : 22 No. of Claims : 15

(12) PATENT APPLICATION PUBLICATION
(19) INDIA
(22) Date of filing of Application :20/10/2014
(21) Application No.8807/DELNP/2014 A
(43) Publication Date : 22/05/2015

(54) Title of the invention : COOKING APPARATUS AND METHOD FOR CONTROLLING A COOKING APPARATUS

(51) International classification :A47J37/06
(31) Priority Document No :2012/0263
(32) Priority Date :20/04/2012
(33) Name of priority country :Belgium
(86) International Application No :PCT/BE2013/000019
Filing Date :18/04/2013
(87) International Publication No :WO 2013/155574
(61) Patent of Addition to Application Number :NA
Filing Date :NA
(62) Divisional to Application Number :NA
Filing Date :NA

(71)**Name of Applicant :**
1)PITTEURS Benny Marcelinus Lydie
Address of Applicant :Zeedijk 78/901 B 8660 De Panne Belgium
(72)**Name of Inventor :**
1)PITTEURS Benny Marcelinus Lydie

(57) Abstract :
Cooking apparatus comprising at least one baking mould (11,12) with a first (13) and a second (14) heating element; and a control system (16) configured to control the power supply to the first (13) and the second (14) heating element wherein the control system (16) is configured to provide the first heating element (13) with a first electric power while the second heating element (14) is provided with a second electric power which differs from the first electric power wherein the first and the second electric power lie in a range from zero to a determined maximum electric power.

No. of Pages : 17 No. of Claims : 17

(12) PATENT APPLICATION PUBLICATION
(19) INDIA
(22) Date of filing of Application :20/10/2014
(21) Application No.8808/DELNP/2014 A
(43) Publication Date : 22/05/2015

(54) Title of the invention : FLOOR COVERING ITEM FOR DETECTING DROPPAGES

(51) International classification :A61B5/11,G08B21/04,A61B5/00
(31) Priority Document No :1201156
(32) Priority Date :19/04/2012
(33) Name of priority country :France
(86) International Application No :PCT/FR2013/050760
Filing Date :08/04/2013
(87) International Publication No :WO 2013/156707
(61) Patent of Addition to Application Number :NA
Filing Date :NA
(62) Divisional to Application Number :NA
Filing Date :NA

(71)**Name of Applicant :**
1)ABCD INNOVATION
Address of Applicant :24 rue dArmaill F 75017 Paris France
(72)**Name of Inventor :**
1)DESGORCES Claude

(57) Abstract :
The invention relates to a covering item 1 for detecting droppages and comprises a body 3 delimited by edges 5,7,9,11 a plurality of pressure sensors 23 distributed in a chosen geometry within the body 3 a processing unit 27 connected to at least some of the pressure sensors 23 and designed to collect information regarding the state of these pressure sensors 23 and at least a first connector 15,17,21 and a second connector 19 each one connected to the processing unit 27 arranged near an edge 5,7,9, 11 and designed to be able to be connected to a connector of another similar item. The processing unit 27 is designed to associate location information drawn from said state information with information regarding the location of the item 1 to receive via the first connector 15,17,21 information from a first other similar item and to emit via the second connector 19 the associated information and/or said information received to a second other similar item.

No. of Pages : 50 No. of Claims : 14

(12) PATENT APPLICATION PUBLICATION
(19) INDIA
(22) Date of filing of Application :20/10/2014
(21) Application No.8809/DELNP/2014 A
(43) Publication Date : 22/05/2015

(54) Title of the invention : AN ADHESIVE WAFER

(51) International classification :A61F13/02,A61L15/58,A61L24/00
(31) Priority Document No :PA 2012 70203
(32) Priority Date :20/04/2012
(33) Name of priority country :Denmark
(86) International Application No :PCT/DK2013/050110
Filing Date :18/04/2013
(87) International Publication No :WO 2013/156034
(61) Patent of Addition to Application Number :NA
Filing Date :NA
(62) Divisional to Application Number :NA
Filing Date :NA

(71)**Name of Applicant :**
1)COLOPLAST A/S
Address of Applicant :Holtedam 1 DK 3050 Humlebaek Denmark
(72)**Name of Inventor :**
1)OEELUND Jakob

(57) Abstract :
The present invention relates to an adhesive wafer suitable for attachment to the skin or a wound the wafer comprising a dressing sheet comprising a layer of skin friendly adhesive the adhesive layer being provided with a backing layer on the non skin facing surface thereof and a flexible protection layer on the skin facing surface of the adhesive layer the protection layer protecting the adhesive layer before use of the wafer and the protection layer being attached to the adhesive layer in such a way that it is releasable and wherein the protection layer is in the form of a porous material.

No. of Pages : 19 No. of Claims : 16

(12) PATENT APPLICATION PUBLICATION
(19) INDIA
(22) Date of filing of Application :20/10/2014
(21) Application No.8810/DELNP/2014 A
(43) Publication Date : 22/05/2015

(54) Title of the invention : COMPOSITIONS FOR TOPICAL TREATMENT OF MICROBIAL INFECTIONS

(51) International classification	:A61K31/195,A61K31/23,A61K9/06
(31) Priority Document No	:61/636203
(32) Priority Date	:20/04/2012
(33) Name of priority country	:U.S.A.
(86) International Application No	:PCT/US2013/037430
Filing Date	:19/04/2013
(87) International Publication No	:WO 2013/159029
(61) Patent of Addition to Application Number	:NA
Filing Date	:NA
(62) Divisional to Application Number	:NA
Filing Date	:NA

(71)**Name of Applicant :**
1)HENNEPIN LIFE SCIENCES
Address of Applicant :5400 Union Terrace Lane North Plymouth Minnesota 55442 U.S.A.
(72)**Name of Inventor :**
1)SCHLIEVERT Patrick

(57) Abstract :
The present invention provides compositions and methods for topical treatment of infections. The compositions comprise glycerol monolaurate or a derivative thereof and are administered topically for example to treat viral fungal or bacterial infections.

No. of Pages : 70 No. of Claims : 46

(12) PATENT APPLICATION PUBLICATION
(19) INDIA
(22) Date of filing of Application :16/10/2014
(21) Application No.8690/DELNP/2014 A
(43) Publication Date : 22/05/2015

(54) Title of the invention : CLASSIFYING FAILURE REPORTS AS EITHER CURRENT OR STALE FOR MOBILITY ROBUSTNESS OPTIMIZATION ADJUSTMENTS

(51) International classification :H04W36/00,H04W24/02
(31) Priority Document No :61/645868
(32) Priority Date :11/05/2012
(33) Name of priority country :U.S.A.
(86) International Application No :PCT/SE2013/000069
Filing Date :10/05/2013
(87) International Publication No :WO 2013/169169
(61) Patent of Addition to Application Number :NA
Filing Date :NA
(62) Divisional to Application Number :NA
Filing Date :NA

(71)**Name of Applicant :**
1)TELEFONAKTIEBOLAGET L M ERICSSON (PUBL)
Address of Applicant :S 164 83 Stockholm Sweden
(72)**Name of Inventor :**
1)DA SILVA Icaro
2)CENTONZA Angelo
3)TEYEB Oumer

(57) Abstract :
The present disclosure relates to identifying stale failure reports in a cellular communications network. In one embodiment a node in a cellular communications network receives a failure report associated with a connection failure for a user equipment and determines when the connection failure occurred with respect to a most recent mobility adjustment made by the node. If the connection failure occurred before the most recent mobility adjustment made by the node the node classifies the failure report as a stale failure report. In one embodiment if the failure report is classified as a stale failure report the node discards the failure. In another embodiment if the failure report is classified as a stale failure report the node considers the failure report with reduced relevance for a next iteration of a process to determine whether new mobility adjustments are desired.

No. of Pages : 80 No. of Claims : 25

(12) PATENT APPLICATION PUBLICATION
(19) INDIA
(22) Date of filing of Application :16/10/2014
(21) Application No.8692/DELNP/2014 A
(43) Publication Date : 22/05/2015

(54) Title of the invention : IMPROVEMENTS IN OR RELATING TO DEFORMABLE NON ROUND MEMBRANE ASSEMBLIES

(51) International classification :G02C7/08,G02B3/14
(31) Priority Document No :1205394.8
(32) Priority Date :27/03/2012
(33) Name of priority country :U.K.
(86) International Application No :PCT/GB2012/051426
Filing Date :20/06/2012
(87) International Publication No :WO 2013/144533
(61) Patent of Addition to Application Number :NA
Filing Date :NA
(62) Divisional to Application Number :NA
Filing Date :NA

(71)**Name of Applicant :**
1)ADLENS LIMITED
Address of Applicant :The Old School First Turn Oxford Oxfordshire OX2 8AH U.K.
(72)**Name of Inventor :**
1)STEVENS Robert Edward
2)EDGINTON Alex
3)HOLLAND Benjamin Thomas Tristram
4)RHODES Daniel Paul
5)PIETROPINTO Dijon
6)BEAN Derek Paul Forbes
7)CLARKE Roger Brian Minchin
8)CROSSLEY Peter Lee
9)MURRAY Richard Leefe Douglas
10)STONE Edwin James

(57) Abstract :
A deformable membrane assembly comprises an at least partially flexible fluid filled envelope one wall of which is formed by an elastic membrane that is held around its edge by a resiliently bendable supporting ring a fixed support for the envelope and selectively operable means for causing relative movement between the supporting ring and the support for adjusting the pressure of the fluid in the envelope thereby to cause the membrane to deform. The bending stiffness of the ring varies round the ring such that upon deformation of the membrane the ring bends variably to control the shape of the membrane to a predefined form. The moving means comprise a plurality of ring engaging members that are arranged to apply a force to the ring at spaced control points. There are at least three control points and there is a control point at or proximate each point on the ring where the profile of the ring that is needed to produce the predefined form upon deformation of the membrane exhibits a turning point in the direction of the force applied at the control point between two adjacent points where the profile of the ring exhibits an inflection point or a turning point in the opposite direction.

No. of Pages : 60 No. of Claims : 39

(12) PATENT APPLICATION PUBLICATION
(19) INDIA
(22) Date of filing of Application :16/10/2014
(21) Application No.8693/DELNP/2014 A
(43) Publication Date : 22/05/2015

(54) Title of the invention : IMPROVEMENTS IN OR RELATING TO DEFORMABLE MEMBRANE ASSEMBLIES

(51) International classification :G02C7/08,G02B3/14
(31) Priority Document No :1205394.8
(32) Priority Date :27/03/2012
(33) Name of priority country :U.K.
(86) International Application No :PCT/EP2012/075549
Filing Date :14/12/2012
(87) International Publication No :WO 2013/143630
(61) Patent of Addition to Application Number :NA
Filing Date :NA
(62) Divisional to Application Number :NA
Filing Date :NA

(71)**Name of Applicant :**
1)ADLENS LIMITED
Address of Applicant :The Old School First Turn Oxford Oxfordshire OX2 8AH U.K.
(72)**Name of Inventor :**
1)EDGINTON Alex
2)HOLLAND Benjamin Thomas Tristram
3)RHODES Daniel Paul
4)PIETROPINTO Dijon
5)BEAN Derek Paul Forbes
6)CLARKE Roger Brian Minchin
7)CROSSLEY Peter Lee
8)MURRAY Richard Leefe Douglas
9)STONE Edwin James
10)STEVENS Robert Edward

(57) Abstract :
The present invention provides a deformable membrane assembly 1 comprising an elastic membrane 8 that is held under tension around its edge by a bendable membrane supporting member 2, 10 a body of fluid in contact with one face of the membrane the pressure of the fluid being controllable for adjusting the shape of the membrane and one or more bending controllers 24 acting on the supporting member 2,10 to control the bending of the supporting member in response to loading through tension in the membrane. The bending stiffness of the membrane supporting member 2,10 varies round its extent to control the profile of the edge of the membrane 8; etc. upon actuation. A variety of different types of bending controllers are disclosed which permit out of plane bending of the supporting member 2, 10 but prevent or control in plane bending or deformation of the supporting member. In some embodiments the bending controllers permit a degree of controlled in plane bending of the supporting member 2,10 in order to control the strain in the membrane 8 upon actuation.

No. of Pages : 86 No. of Claims : 30

(12) PATENT APPLICATION PUBLICATION
(19) INDIA
(22) Date of filing of Application :20/10/2014
(21) Application No.8785/DELNP/2014 A
(43) Publication Date : 22/05/2015

(54) Title of the invention : VENTILATION SYSTEM

(51) International classification :H05K7/20,F21V31/00,F21V31/03
(31) Priority Document No :2012079296
(32) Priority Date :30/03/2012
(33) Name of priority country :Japan
(86) International Application No :PCT/JP2013/001664
Filing Date :13/03/2013
(87) International Publication No :WO 2013/145604
(61) Patent of Addition to Application Number :NA
Filing Date :NA
(62) Divisional to Application Number :NA
Filing Date :NA

(71)**Name of Applicant :**
1)NITTO DENKO CORPORATION
Address of Applicant :1 2 Shimohozumi 1 chome Ibaraki shi Osaka 5678680 Japan
(72)**Name of Inventor :**
1)YANO Youzou
2)TEZUKA Teppei
3)FURUUCHI Kouji

(57) Abstract :
This ventilation system (1) is equipped with: a case (2) that has at least a pair of vent holes (21); and a piezoelectric blower (3) that is attached at least to one of the pair of vent holes (21). The piezoelectric blower (3) generates a flow of air to be distributed through the vent holes (21) by vibrating a diaphragm by means of a piezoelectric component. According to this configuration because the piezoelectric blower (3) has a thin plate like shape a forced convection of air can be produced with a small space.
Additionally because the piezoelectric blower (3) continuously operates as long as electricity is supplied moisture can be quickly discharged from the inside of the case (2) to the outside.

No. of Pages : 18 No. of Claims : 4

(12) PATENT APPLICATION PUBLICATION
(19) INDIA
(22) Date of filing of Application :20/10/2014
(21) Application No.8787/DELNP/2014 A
(43) Publication Date : 22/05/2015

(54) Title of the invention : LOCAL DEVICE IDENTITY ALLOCATION FOR NETWORK ASSISTED DEVICE TO DEVICE D2D COMMUNICATION

(51) International classification	:H04W8/00,H04W84/18,H04W76/02
(31) Priority Document No	:61/646987
(32) Priority Date	:15/05/2012
(33) Name of priority country	:U.S.A.
(86) International Application No	:PCT/EP2013/059595
Filing Date	:08/05/2013
(87) International Publication No	:WO 2013/171113
(61) Patent of Addition to Application Number	:NA
Filing Date	:NA
(62) Divisional to Application Number	:NA
Filing Date	:NA

(71)**Name of Applicant :**
1)TELEFONAKTIEBOLAGET L M ERICSSON (PUBL)
Address of Applicant :S 164 83 Stockholm Sweden
(72)**Name of Inventor :**
1)LINDOFF Bengt
2)FODOR Gabor
3)WILHELMSSON Leif

(57) Abstract :
A method of a network node adapted to provide assistance of device to device communication is disclosed. The method comprises receiving from a first wireless communication device adapted to perform device to device communication one or more first global device identities associated with the first wireless communication device and allocating one or more first local device identities to the first wireless communication device based on the received global device identities (330). The method also comprises storing in association to the network node a mapping between each received one or more first global device identity and each allocated one or more first local device identity transmitting information indicative of the allocated one or more first local device identities to the first wireless communication device and transmitting information indicative of at least one of the allocated one or more first local device identities to a first group of one or more other wireless communication devices (350). A method of a wireless communication device adapted to perform device to device communication is also disclosed. The method comprises receiving from a network node information indicative of at least one local device identity allocated to another wireless communication device and monitoring device to device communication beacon signaling based on the received at least one local device identity.

No. of Pages : 49 No. of Claims : 16

(12) PATENT APPLICATION PUBLICATION
(19) INDIA
(22) Date of filing of Application :20/10/2014
(21) Application No.8788/DELNP/2014 A
(43) Publication Date : 22/05/2015

(54) Title of the invention : METHOD AND APPARATUS FOR HANDLING P CSCF FAILURE AND RESTORING CONNECTIVITY

(51) International classification	:H04L29/06,H04W88/14,H04W76/02
(31) Priority Document No	:NA
(32) Priority Date	:NA
(33) Name of priority country	:NA
(86) International Application No Filing Date	:PCT/EP2012/059391 :21/05/2012
(87) International Publication No	:WO 2013/174413
(61) Patent of Addition to Application Number Filing Date	:NA :NA
(62) Divisional to Application Number Filing Date	:NA :NA

(71)**Name of Applicant :**
1)TELEFONAKTIEBOLAGET L M ERICSSON (PUBL)
Address of Applicant :S 164 83 Stockholm Sweden
(72)**Name of Inventor :**
1)HALLENST…L Magnus
2)BLAU Staffan

(57) Abstract :
A method for restoring connectivity between a node in an IP Multimedia Subsystem IMS network and a User Equipment UE. The UE is associated with a Proxy Call Session Control Function node P CSCF of said IMS network and with at least one control node of a packet access network through which the UE connects to the IMS network. The method allows for restoring the connectivity of the UE to an IMS network node after said IMS node has failed to establish a communication to said UE via said P CSCF node.

No. of Pages : 26 No. of Claims : 14

(12) PATENT APPLICATION PUBLICATION
(19) INDIA
(22) Date of filing of Application :20/10/2014
(21) Application No.8789/DELNP/2014 A
(43) Publication Date : 22/05/2015

(54) Title of the invention : GENERATION OF COMFORT NOISE

(51) International classification	:G10L19/012,G10L25/78,G10L19/07
(31) Priority Document No	:61/699448
(32) Priority Date	:11/09/2012
(33) Name of priority country	:U.S.A.
(86) International Application No	:PCT/EP2013/059514
Filing Date	:07/05/2013
(87) International Publication No	:WO 2014/040763
(61) Patent of Addition to Application Number	:NA
Filing Date	:NA
(62) Divisional to Application Number	:NA
Filing Date	:NA

(71)**Name of Applicant :**
1)TELEFONAKTIEBOLAGET L M ERICSSON (PUBL)
Address of Applicant :S 164 83 Stockholm Sweden
(72)**Name of Inventor :**
1)JANSSON TOFTG…RD Tomas

(57) Abstract :
A comfort noise controller (50) for generating CN (Comfort Noise) control parameters is described. A buffer (200) of a predetermined size is configured to store CN parameters for SID (Silence Insertion Descriptor) frames and active hangover frames. A subset selector (50A) is configured to determine a CN parameter subset relevant for SID frames based on the age of the stored CN parameters and on residual energies. A comfort noise control parameter extractor (50B) is configured to use the determined CN parameter subset to determine the CN control parameters for a first SID frame following an active signal frame.

No. of Pages : 40 No. of Claims : 17

(12) PATENT APPLICATION PUBLICATION
(19) INDIA
(22) Date of filing of Application :17/10/2014
(21) Application No.8757/DELNP/2014 A
(43) Publication Date : 22/05/2015

(54) Title of the invention : TOUCH PANEL AND METHOD OF MANUFACTURING THE SAME

(51) International classification :G06F3/041
(31) Priority Document No :1020120041883
(32) Priority Date :23/04/2012
(33) Name of priority country :Republic of Korea
(86) International Application No :PCT/KR2013/003430
Filing Date :23/04/2013
(87) International Publication No :WO 2013/162241
(61) Patent of Addition to Application Number :NA
Filing Date :NA
(62) Divisional to Application Number :NA
Filing Date :NA

(71)**Name of Applicant :**
1)SAMSUNG ELECTRONICS CO. LTD.
Address of Applicant :129 Samsung ro Yeongtong gu Suwon si Gyeonggi do 443 742 Republic of Korea
(72)**Name of Inventor :**
1)KIM Hak Yeol

(57) Abstract :
A touch panel using a conductive mesh and a method of manufacturing the same are provided. The touch panel includes a substrate on which a conductive mesh is disposed a plurality of driving channels for recognizing a horizontal axis coordinate wherein the plurality of driving channels are formed by patterning a first conductive mesh disposed on the substrate a plurality of sensing channels for recognizing a vertical axis coordinate wherein the sensing channels are formed by patterning a second conductive mesh disposed on the substrate and an insulating layer positioned between the first conductive mesh and the second conductive mesh.

No. of Pages : 30 No. of Claims : 15

(12) PATENT APPLICATION PUBLICATION
(21) Application No.8758/DELNP/2014 A
(19) INDIA
(22) Date of filing of Application :17/10/2014
(43) Publication Date : 22/05/2015

(54) Title of the invention : PETAL CONTROL VALVE WITH SEALING GASKET FOR SEPARABLE CONNECTION UNITS FOR FLEXIBLE HOSES

(51) International classification :F16K1/16,F16L55/10
(31) Priority Document No :MI2012A000694
(32) Priority Date :26/04/2012
(33) Name of priority country :Italy
(86) International Application No :PCT/IB2013/053233
Filing Date :24/04/2013
(87) International Publication No :WO 2013/160843
(61) Patent of Addition to Application Number :NA
Filing Date :NA
(62) Divisional to Application Number :NA
Filing Date :NA

(71)**Name of Applicant :**
1)MIB ITALIANA S.P.A.
Address of Applicant :Via Garibaldi 6 I 35020 Casalserugo Pd Italy
(72)**Name of Inventor :**
1)BORMIOLI Lorenzo

(57) Abstract :
A control valve (5,5) for connection units for flexible hoses is described comprising a plurality of petals (segments or sectors) (6,7; 6,7) rotatable between a position of complete opening and a position of complete closing wherein rotatable petals (6,7; 6,7) of different shape and sizes alternate in pairs along the circumference of the connection unit. The petals (6,6) of smaller size have a substantially triangular shape with straight lateral sides (38) and a rounded end (36) which fluid tightly abut against corresponding straight lateral sides (33) and curved parts (34) of the petals of larger size when the valve is closed. Said lateral sides (38) and said curved end (36) of the petals (6,6) of smaller size have a continuous cavity (80) with a dovetail cross section and small lateral entrance (81) in which a sealing gasket (82) with a substantially circular cross section and with ends fixed in a removable manner to the remote ends of said lateral sides (38) is housed and retained.

No. of Pages : 26 No. of Claims : 5

(12) PATENT APPLICATION PUBLICATION
(21) Application No.8759/DELNP/2014 A
(19) INDIA
(22) Date of filing of Application :17/10/2014
(43) Publication Date : 22/05/2015

(54) Title of the invention : MEDIUM LOADING DEVICE AND RECORDING APPARATUS

(51) International classification :B65H16/06,B41J15/02
(31) Priority Document No :2012090275
(32) Priority Date :11/04/2012
(33) Name of priority country :Japan
(86) International Application No :PCT/JP2013/001851
Filing Date :19/03/2013
(87) International Publication No :WO 2013/153747
(61) Patent of Addition to Application Number :NA
Filing Date :NA
(62) Divisional to Application Number :NA
Filing Date :NA

(71)**Name of Applicant :**
1)SEIKO EPSON CORPORATION
Address of Applicant :4 1 Nishi shinjuku 2 chome Shinjuku ku Tokyo 1630811 Japan
(72)**Name of Inventor :**
1)AKATSU Shoji
2)MASHIMA Akira
3)MUROTANI Tomoya
4)SHIMADA Yoshitaka

(57) Abstract :
A medium loading device includes a support unit having shaft members mounted on both end portions of a roll paper and flange member and a loading portion where the roll paper with the support unit is loaded. The loading portion includes a rotary driving portion as a driving source to rotate the roll paper a rotation shaft to transmit torque of the rotary driving portion to the roll paper via the shaft member and an operation portion that moves the rotation shaft between a transmission position to transmit the torque to the roll paper and a non transmission position not to transmit the torque to the roll paper. In an axial direction of the roll paper when the roll paper is loaded into the loading portion the operation portion is disposed between the position where the shaft member is located when the roll paper is loaded and the rotary driving portion.

No. of Pages : 59 No. of Claims : 12

(12) PATENT APPLICATION PUBLICATION
(19) INDIA
(22) Date of filing of Application :20/10/2014
(21) Application No.8826/DELNP/2014 A
(43) Publication Date : 22/05/2015

(54) Title of the invention : METHOD FOR OPERATING AN INTERNAL COMBUSTION ENGINE WITH A MULTI PORT INJECTION

(51) International classification :F02D41/30,F02D41/34,F02M35/10
(31) Priority Document No :102012212464.0
(32) Priority Date :17/07/2012
(33) Name of priority country :Germany
(86) International Application No :PCT/EP2013/063012
Filing Date :21/06/2013
(87) International Publication No :WO 2014/012744
(61) Patent of Addition to Application Number :NA
Filing Date :NA
(62) Divisional to Application Number :NA
Filing Date :NA

(71)**Name of Applicant :**
1)ROBERT BOSCH GMBH
Address of Applicant :Postfach 30 02 20 70442 Stuttgart Germany
(72)**Name of Inventor :**
1)FISCHER Michael
2)GUTSCHER Andreas
3)POSSELT Andreas
4)LORENZ Marko

(57) Abstract :
The invention relates to an internal combustion engine (10) with a multi port injection in which each cylinder (14,20) is associated with at least one first injection device (40,46) and one second injection device (48,54). According to the invention at least temporarily the first injection device (40,46) is actuated at a different crank angle than the second injection device (48 ,54).

No. of Pages : 13 No. of Claims : 7

(12) PATENT APPLICATION PUBLICATION
(19) INDIA
(22) Date of filing of Application :20/10/2014
(21) Application No.8796/DELNP/2014 A
(43) Publication Date : 22/05/2015

(54) Title of the invention : A POWER SYSTEM AND METHOD FOR OPERATING A WIND POWER SYSTEM WITH A DISPATCHING ALGORITHM

(51) International classification :F03D7/02,F03D7/04,F03D9/00
(31) Priority Document No :PA 2012 70246
(32) Priority Date :11/05/2012
(33) Name of priority country :Denmark
(86) International Application No :PCT/DK2013/050138
Filing Date :10/05/2013
(87) International Publication No :WO 2013/167141
(61) Patent of Addition to Application Number :NA
Filing Date :NA
(62) Divisional to Application Number :NA
Filing Date :NA

(71)**Name of Applicant :**
1)VESTAS WIND SYSTEMS A/S
Address of Applicant :Hedeager 44 DK 8200 Aarhus N Denmark
(72)**Name of Inventor :**
1)TARNOWSKI Germ¡n Claudio

(57) Abstract :
The present invention relates to a power system having a plurality wind turbine generators and a power plant controller arranged to communicate with the plurality of wind turbines generators where each of the plurality of wind turbine generator being related to a wind turbine controller the wind turbine controller being arranged to control an active power output in its related wind turbine generator according to an active power set point received from the wind power plant controller; a first subset of wind turbine generators operating at an active power output unrestricted of the active power set point; and a second subset of wind turbine generators operating according to an active power set point; and wherein the wind power plant controller communicates the active power set point in accordance with the active power output of the first subset of the plurality of wind turbines generators so as to reduce active power fluctuation of the aggregated active power output of the first and second subset of the plurality of wind turbines generators. The present invention also relates to method accordingly.

No. of Pages : 42 No. of Claims : 14

(12) PATENT APPLICATION PUBLICATION
(19) INDIA
(22) Date of filing of Application :21/10/2014
(21) Application No.8832/DELNP/2014 A
(43) Publication Date : 22/05/2015

(54) Title of the invention : COMBINED POWER AND HEATING STATION

(51) International classification :F24D12/02,F01K17/02,F24D10/00
(31) Priority Document No :20120412
(32) Priority Date :04/04/2012
(33) Name of priority country :Norway
(86) International Application No :PCT/NO2013/050063
Filing Date :03/04/2013
(87) International Publication No :WO 2013/151443
(61) Patent of Addition to Application Number :NA
Filing Date :NA
(62) Divisional to Application Number :NA
Filing Date :NA

(71)**Name of Applicant :**
1)VIKING HEAT ENGINES AS
Address of Applicant :Postboks 22 N 4661 Kristiansand Norway
(72)**Name of Inventor :**
1)AAS BJERKAN Trond
2)RISL… Harald Nes
3)SˇRVIG Kjetil

(57) Abstract :
A combined heat and power plant (1) is described in which at least one primary heat source (11) is thermally connected to a heat distribution network (15) for heat energy (Q) via one or more primary heat exchangers (111) and in which at least one secondary heat source (12) is thermally connected to one or more energy converters (13) arranged to when an amount of heat energy (Q) is supplied from the at least one secondary heat source generate an amount of electrical energy (P) for an internal electricity distribution network (19) in the combined heat and power plant (1). A method of operating a combined heat and power plant (1) is described as well.

No. of Pages : 15 No. of Claims : 10

(12) PATENT APPLICATION PUBLICATION
(19) INDIA
(22) Date of filing of Application :21/10/2014
(21) Application No.8833/DELNP/2014 A
(43) Publication Date : 22/05/2015

(54) Title of the invention : CUSTOMER ASSISTANCE REQUEST SYSTEM USING SMART DEVICE

(51) International classification :G06Q30/06,H04L29/08
(31) Priority Document No :61/614159
(32) Priority Date :22/03/2012
(33) Name of priority country :U.S.A.
(86) International Application No :PCT/US2012/048811
Filing Date :30/07/2012
(87) International Publication No :WO 2013/141894
(61) Patent of Addition to Application Number :NA
Filing Date :NA
(62) Divisional to Application Number :NA
Filing Date :NA

(71)**Name of Applicant :**
1)TYCO FIRE & SECURITY GMBH
Address of Applicant :Victor Von Bruns Strasse 21 CH 8212 Neuhausen am Rheinfall Switzerland
(72)**Name of Inventor :**
1)VAN NEST Nancy Lee
2)HALL Stewart E.
3)LEON Gustavo
4)RASBAND Paul Brent
5)RELIHAN Timothy J.
6)SALCEDO David M.

(57) Abstract :
A method and computer for responding to an assistance request message. An assistance request message from a requester mobile device associated with a requester is received at a response computer. The assistance request message includes at least one input parameter. A responder is determined from multiple potential responders to respond to the assistance request message. The responder is associated with responder data corresponding to the at least one input parameter. An availability inquiry message to a responder device associated with the responder is transmitted. A response to the availability inquiry message is received from the responder device. When the response to the availability inquiry message indicates that the responder is available to respond to the assistance request message the requester mobile device is notified that the responder is available.

No. of Pages : 59 No. of Claims : 21

(12) PATENT APPLICATION PUBLICATION
(19) INDIA
(22) Date of filing of Application :21/10/2014
(21) Application No.8834/DELNP/2014 A
(43) Publication Date : 22/05/2015

(54) Title of the invention : POWER SOURCE DEVICE

(51) International classification :H02M7/48
(31) Priority Document No :NA
(32) Priority Date :NA
(33) Name of priority country :NA
(86) International Application No :PCT/JP2012/058517
Filing Date :30/03/2012
(87) International Publication No :WO 2013/145248
(61) Patent of Addition to Application Number :NA
Filing Date :NA
(62) Divisional to Application Number :NA
Filing Date :NA

(71)**Name of Applicant :**
1)TOSHIBA MITSUBISHI ELECTRIC INDUSTRIAL SYSTEMS CORPORATION
Address of Applicant :3 1 1 Kyobashi Chuo ku Tokyo 1040031 Japan
(72)**Name of Inventor :**
1)LEE Tingan
2)KINOSHITA Masahiro
3)NAGAI Nobuyuki
4)SANADA Kazunori

(57) Abstract :
In the present invention a power conversion circuit connected to a three phase AC line is controlled by a PWM method. First to third carrier wave signals (55,56,57) are generated to control arms corresponding to each phase. The first to third carrier wave signals include two signals (55,56) with mutually different phases which are 180° apart. Because the zero phase component reaches peak value less frequently the zero phase component has a smaller time average. Thus it is possible to reduce the zero phase high frequency component generated from a power source device.

No. of Pages : 45 No. of Claims : 7

(12) PATENT APPLICATION PUBLICATION
(19) INDIA
(22) Date of filing of Application :15/10/2014
(21) Application No.8628/DELNP/2014 A
(43) Publication Date : 22/05/2015

(54) Title of the invention : SHOWER HEAD

(51) International classification :B05B1/04,B05B1/26,B05B1/18
(31) Priority Document No :599011
(32) Priority Date :23/03/2012
(33) Name of priority country :New Zealand
(86) International Application No :PCT/NZ2013/000047
Filing Date :22/03/2013
(87) International Publication No :WO 2013/141719
(61) Patent of Addition to Application Number :NA
Filing Date :NA
(62) Divisional to Application Number :NA
Filing Date :NA

(71)**Name of Applicant :**
1)METHVEN LIMITED
Address of Applicant :447 Rosebank Road Avondale Auckland 1026 New Zealand
(72)**Name of Inventor :**
1)McCUTCHEON Stephen McLay

(57) Abstract :
A spray head (100) has an inlet (4) in fluid communication with a plurality of nozzles (15). The nozzles (15) are adapted to produce in use a jet of fluid (16) which is directed toward a respective impingement surface portion (22). The jet of fluid (16) impacts on the respective impingement surface portion (22) and breaks into a stream of droplets 23. The stream of droplets (23) has an elongate transverse cross section.

No. of Pages : 30 No. of Claims : 30

(12) PATENT APPLICATION PUBLICATION
(19) INDIA
(22) Date of filing of Application :15/10/2014
(21) Application No.8629/DELNP/2014 A
(43) Publication Date : 22/05/2015

(54) Title of the invention : METHOD AND SYSTEM FOR DETECTION OF MICROBIAL GROWTH IN A SPECIMEN CONTAINER

(51) International classification :C12Q1/04,C12M1/00
(31) Priority Document No :61/614037
(32) Priority Date :22/03/2012
(33) Name of priority country :U.S.A.
(86) International Application No :PCT/US2013/032210
Filing Date :15/03/2013
(87) International Publication No :WO 2013/142347
(61) Patent of Addition to Application Number :NA
Filing Date :NA
(62) Divisional to Application Number :NA
Filing Date :NA

(71)**Name of Applicant :**
1)BIOMERIEUX INC.
Address of Applicant :100 Rodolphe Street Durham North Carolina 27712 U.S.A.
(72)**Name of Inventor :**
1)ULLERY Michael

(57) Abstract :
A method for determining whether microbial growth is occurring within a specimen container includes steps of incubating the specimen container and obtaining a series of measurement data points while the specimen container is incubated and storing the data points in a machine readable memory. The series of measurement data points represent a growth curve of microbial growth within the specimen container. The methods determine a positive condition of microbial growth within the container from the measurement data points.

No. of Pages : 66 No. of Claims : 42

(12) PATENT APPLICATION PUBLICATION
(19) INDIA
(22) Date of filing of Application :21/10/2014
(21) Application No.8840/DELNP/2014 A
(43) Publication Date : 22/05/2015

(54) Title of the invention : METHOD FOR PRODUCING ALKYLATED AROMATIC AMIDE DERIVATIVE

(51) International classification :C07C231/12,C07C237/42
(31) Priority Document No :2012085053
(32) Priority Date :03/04/2012
(33) Name of priority country :Japan
(86) International Application No :PCT/JP2013/059695
Filing Date :29/03/2013
(87) International Publication No :WO 2013/150988
(61) Patent of Addition to Application Number :NA
Filing Date :NA
(62) Divisional to Application Number :NA
Filing Date :NA

(71)**Name of Applicant :**
1)MITSUI CHEMICALS AGRO INC.
Address of Applicant :5 2 Higashi Shimbashi 1 chome Minato ku Tokyo 1057117 Japan
(72)**Name of Inventor :**
1)OKURA Hironari

(57) Abstract :
Provided is a method for producing an aromatic amide derivative represented by general formula (4) which comprises a step wherein an aromatic amide derivative represented by general formula (1) and a haloalkyl compound represented by general formula (3) are reacted with each other in the presence of a base and a metal or metal salt. In the general formulae each of X and Y represents a hydrogen atom a halogen atom or the like; A represents a hydrogen atom an alkyl group a group represented by general formula (2) or the like; each of G and G represents an oxygen atom or the like; Q represents a phenyl group or the like; R represents a hydrogen atom an alkyl group or the like; Z represents a haloalkyl group or the like; Xa represents an iodine atom or the like; m represents a number of 1 4; n1 represents a number of 1 5; and n2 represents a number of 1 4.

No. of Pages : 86 No. of Claims : 7

(12) PATENT APPLICATION PUBLICATION
(19) INDIA
(22) Date of filing of Application :21/10/2014
(21) Application No.8841/DELNP/2014 A
(43) Publication Date : 22/05/2015

(54) Title of the invention : AROMATIC DISPERSANT COMPOSITION

(51) International classification :C08G65/02,C08G65/333
(31) Priority Document No :61/641342
(32) Priority Date :02/05/2012
(33) Name of priority country :U.S.A.
(86) International Application No :PCT/US2013/038114
Filing Date :25/04/2013
(87) International Publication No :WO 2013/165792
(61) Patent of Addition to Application Number :NA
Filing Date :NA
(62) Divisional to Application Number :NA
Filing Date :NA

(71)**Name of Applicant :**
1)LUBRIZOL ADVANCED MATERIALS INC.
Address of Applicant :9911 Brecksville Road Cleveland Ohio 44141 3247 U.S.A.
(72)**Name of Inventor :**
1)THETFORD Dean
2)SHOOTER Andrew J.
3)RICHARDS Stuart N.

(57) Abstract :
The present invention relates to a composition containing a particulate solid a polar or non polar organic medium and a polymer chain having at least one fused aromatic imide pendant group. The invention further provides compositions for coatings inks toners plastic materials (such as thermoplastics) plasticisers plastisols crude grinding and flush.

No. of Pages : 84 No. of Claims : 25

(12) PATENT APPLICATION PUBLICATION
(19) INDIA
(22) Date of filing of Application :21/10/2014
(21) Application No.8843/DELNP/2014 A
(43) Publication Date : 22/05/2015

(54) Title of the invention : POLE PART FOR MEDIUM VOLTAGE USE AND METHOD FOR MANUFACTURE THE SAME

(51) International classification :B29C45/14,H01H33/662,H01H33/66
(31) Priority Document No :12002834.5
(32) Priority Date :23/04/2012
(33) Name of priority country :EPO
(86) International Application No :PCT/EP2013/001211
Filing Date :23/04/2013
(87) International Publication No :WO 2013/159906
(61) Patent of Addition to Application Number :NA
Filing Date :NA
(62) Divisional to Application Number :NA
Filing Date :NA

(71)**Name of Applicant :**
1)ABB TECHNOLOGY AG
Address of Applicant :Affolternstrasse 44 CH 8050 Zurich Switzerland
(72)**Name of Inventor :**
1)KLASKA Arne
2)GENTSCH Dietmar
3)ENGELKE Robin
4)BAIER Wilfried

(57) Abstract :
The invention relates to a pole part for medium voltage use with an insulating coverage made of duroplastic or thermoplastic material and method for manufacture the same according to the preamble of Claims 1 and 4. In order to enhance the manufacture of pole parts in that way that the ready pole part could be easier released out of the mould and additionally that the inferface between elements made of different materials are tightly closed in order to generate reproducable dielectric withstand Performance in the manufacture the transition area between different elements of the pole part are commonly flat in such a way that rounded edges and/or steps are avoided.

No. of Pages : 12 No. of Claims : 7

(12) PATENT APPLICATION PUBLICATION
(19) INDIA
(22) Date of filing of Application :16/10/2014
(21) Application No.8676/DELNP/2014 A
(43) Publication Date : 22/05/2015

(54) Title of the invention : FENESTRATED IMPLANT

(51) International classification :A61B17/04
(31) Priority Document No :61/642681
(32) Priority Date :04/05/2012
(33) Name of priority country :U.S.A.
(86) International Application No :PCT/US2013/039711
Filing Date :06/05/2013
(87) International Publication No :WO 2013/166496
(61) Patent of Addition to Application Number :NA
Filing Date :NA
(62) Divisional to Application Number :NA
Filing Date :NA

(71)**Name of Applicant :**
1)SI BONE INC.
Address of Applicant :3055 Olin Avenue Suite 2200 San Jose CA 95128 U.S.A.
(72)**Name of Inventor :**
1)MAULDIN Richard Garret
2)YERBY Scott A.
3)REILEY Mark
4)SCHNEIDER Bret

(57) Abstract :
The present invention relates generally to implants used in medical procedures such as bone fixation or fusion. More specifically this application relates to fenestrated implants used bone fixation or fusion.

No. of Pages : 54 No. of Claims : 27

(12) PATENT APPLICATION PUBLICATION
(19) INDIA
(22) Date of filing of Application :21/10/2014
(21) Application No.8848/DELNP/2014 A
(43) Publication Date : 22/05/2015

(54) Title of the invention : SURGICAL GUIDE WITH CUT RESISTANT INSERTS

(51) International classification :A61B17/15,A61B17/17
(31) Priority Document No :61/642063
(32) Priority Date :03/05/2012
(33) Name of priority country :U.S.A.
(86) International Application No :PCT/US2013/030139
Filing Date :11/03/2013
(87) International Publication No :WO 2013/165559
(61) Patent of Addition to Application Number :NA
Filing Date :NA
(62) Divisional to Application Number :NA
Filing Date :NA

(71)**Name of Applicant :**
1)SYNTHES GMBH
Address of Applicant :Eimattstrasse 3 CH 4436 Oberdorf Switzerland
(72)**Name of Inventor :**
1)DAVISON Andrew C.
2)BARTHOLD Michael

(57) Abstract :
A resection guide can be configured to guide a resection tool toward a graft source and can include a resection guide body made from a first material and a guide member made from a second material. The second material is harder than the first material.

No. of Pages : 71 No. of Claims : 39

(12) PATENT APPLICATION PUBLICATION
(19) INDIA
(22) Date of filing of Application :21/10/2014
(21) Application No.8850/DELNP/2014 A
(43) Publication Date : 22/05/2015

(54) Title of the invention : GAS CUTTING TIP FOR PREVENTING BACKFIRE

(51) International classification :F23D14/54,F23D14/58,B23K7/10
(31) Priority Document No :1020120029502
(32) Priority Date :22/03/2012
(33) Name of priority country :Republic of Korea
(86) International Application No :PCT/KR2012/011005
Filing Date :17/12/2012
(87) International Publication No :WO 2013/141466
(61) Patent of Addition to Application Number :NA
Filing Date :NA
(62) Divisional to Application Number :NA
Filing Date :NA

(71)**Name of Applicant :**
1)YANG Taehan
Address of Applicant :301. 7 Ilsin ro 40beon gil Bupyeong gu Incheon 403 110 Republic of Korea
(72)**Name of Inventor :**
1)YANG Taehan

(57) Abstract :
The present invention relates to a gas cutting tip comprising: a flow path connector which is coupled to an outlet of a cutter head and in which an oxygen flow path and a gas flow path for transmitting oxygen and gas are formed around a center and a rim thereof respectively; an oxygen nozzle which is coupled to a center of a lower end of the flow path connector and in which an oxygen discharge hole is formed on the inside thereof so as to discharge oxygen supplied from the oxygen flow path and simultaneously gas guide grooves are formed in a constant interval around a lower end part; a gas nozzle in which the flow path connector is coupled to an outer circumference of a lower end thereof when the oxygen nozzle is provided on the inside thereof and in which a gas discharge hole is formed on the inside thereof so as to discharge gas supplied from the gas flow path along the gas guide grooves wherein a first front end part of the oxygen nozzle protrudes to the outside farther than a second front end part thereof while also having a semispherical shape a semispherical recess is formed on the inside of the second front end part of the gas nozzle so as to smoothly discharge the gas a waterproof protrusion is formed at an upper end of the gas nozzle a waterproof groove coupled with the waterproof protrusion is formed at a lower end of the flow path connector the waterproof protrusion is held in the waterproof groove when the gas nozzle is coupled to the flow path connector by a cap nut a first screw part is formed along an upper periphery of the flow path connector a coupling nut is coupled to the first screw part an insertion groove is formed at a center of an upper surface of the coupling nut and a sealing pad is inserted into the insertion groove to be closely attached to a lower end surface of the cutter head. The present invention can prevent a fire due to a back flow of gas and an explosion from occurring if making contacting state with a basic material when the gas cutter is used and can block fragments of the basic material or permeation of foreign substances and can provide excellent watertightness.

No. of Pages : 13 No. of Claims : 1

(12) PATENT APPLICATION PUBLICATION
(19) INDIA
(22) Date of filing of Application :22/10/2014
(21) Application No.8851/DELNP/2014 A
(43) Publication Date : 22/05/2015

(54) Title of the invention : DISPOSABLE DIAPER

(51) International classification :A61F13/15,A61F13/49,A61F13/53
(31) Priority Document No :2012082909
(32) Priority Date :30/03/2012
(33) Name of priority country :Japan
(86) International Application No :PCT/JP2013/059257
Filing Date :28/03/2013
(87) International Publication No :WO 2013/147021
(61) Patent of Addition to Application Number :NA
Filing Date :NA
(62) Divisional to Application Number :NA
Filing Date :NA

(71)**Name of Applicant :**
1)UNICHARM CORPORATION
Address of Applicant :182 Shimobun Kinsei cho Shikokuchuo shi Ehime 7990111 Japan
(72)**Name of Inventor :**
1)SAKAGUCHI Satoru
2)SAWA Kana

(57) Abstract :
The absorbent body (40) of this disposable diaper (10) is provided with: a first region (41) from the end (40R) at the back waist encircling region of the absorbent body to the groin region (25) side; and a second region (42) that has a lower bending rigidity than the first region (41) and is disposed adjacent to the first region (41) at the groin region (25) side of the first region (41). The ends (75R) at the back waist encircling region (30) side of leg expansion/contraction section (75) and the ends (84R) at the back waist encircling region (30) side of the contracted section (84) of leg side expansion/contraction sections are disposed at the groin region (25) side of the ends (41R) of the first region (41) at the back waist encircling region (30) side and are disposed at the back waist encircling region (30) side of the ends (41F) of the first region (41) at the groin region (25) side.

No. of Pages : 43 No. of Claims : 11

(12) PATENT APPLICATION PUBLICATION
(19) INDIA
(22) Date of filing of Application :21/10/2014
(21) Application No.8835/DELNP/2014 A
(43) Publication Date : 22/05/2015

(54) Title of the invention : ENERGY STORAGE BATTERY

(51) International classification :H01M8/18
(31) Priority Document No :NA
(32) Priority Date :NA
(33) Name of priority country :NA
(86) International Application No :PCT/JP2012/061546
Filing Date :01/05/2012
(87) International Publication No :WO 2013/164879
(61) Patent of Addition to Application Number :NA
Filing Date :NA
(62) Divisional to Application Number :NA
Filing Date :NA

(71)**Name of Applicant :**
1)NISSIN ELECTRIC CO. LTD.
Address of Applicant :47 Umezu Takase cho Ukyo ku Kyoto shi Kyoto 6158686 Japan
(72)**Name of Inventor :**
1)DEGUCHI Hiroshige
2)HUANG Lan
3)UEMURA Yuki
4)YAMANOUCHI Shosuke

(57) Abstract :
A redox flow battery (1) is mainly provided with: a charge/discharge cell (2); a positive electrode electrolyte solution tank (3); and a negative electrode electrolyte solution tank (4). The inside of the charge/discharge cell (2) is divided into a positive electrode side cell (2a) and a negative electrode side cell (2b) by a diaphragm (11). A collector plate (12) and a positive electrode (13) are contained in the positive electrode side cell (2a). An aqueous solution containing a manganese polyethyleneimine complex is supplied from the positive electrode electrolyte solution tank (3) to the positive electrode (13) through a supply pipe (3a). Consequently an energy storage battery that has durability sufficient for practical applications in a wide range of fields can be provided.

No. of Pages : 54 No. of Claims : 11

(12) PATENT APPLICATION PUBLICATION
(19) INDIA
(22) Date of filing of Application :21/10/2014
(21) Application No.8837/DELNP/2014 A
(43) Publication Date : 22/05/2015

(54) Title of the invention : METHOD FOR INJECTION MOULDING OF THERMOPLASTIC POLE PARTS AND MOULD FOR PROCEEDING THE SAME

(51) International classification :B29C45/14,H01H33/662,B29K105/12
(31) Priority Document No :12002833.7
(32) Priority Date :23/04/2012
(33) Name of priority country :EPO
(86) International Application No :PCT/EP2013/001212
Filing Date :23/04/2013
(87) International Publication No :WO 2013/159907
(61) Patent of Addition to Application Number :NA
Filing Date :NA
(62) Divisional to Application Number :NA
Filing Date :NA

(71)**Name of Applicant :**
1)ABB TECHNOLOGY AG
Address of Applicant :Affolternstrae 44 CH 8050 Zurich Switzerland
(72)**Name of Inventor :**
1)KLASKA Arne
2)GENTSCH Dietmar
3)BEDNAROWSKI Dariusz
4)MALINOWSKI Lukasz
5)SHANG Wenkai

(57) Abstract :
The invention relates to a method for injection moulding of thermoplastic pole parts with the use of a mould in which at least one vacuum interrupter and contact terminals are fixed during the moulding procees and with at least one injection opening or gate for injection of thermoplastic material into the mould and mould for proceeding the same according to the preamble of claims 1 and 9. In order to solve the problem with a pressure gradient along the long axis of the moulded pole part and to result in shorte process times as well as in a homogenous dissipation of material during the moulding process the mould is applied with multiple injection openings at least along its long axis for injection of hot thermoplastic material and that the injection openings or gates can be steared in such a way that they inject thermoplastic material simultaneously or with a defined time dependend injection pattern.

No. of Pages : 13 No. of Claims : 12

(12) PATENT APPLICATION PUBLICATION
(19) INDIA
(22) Date of filing of Application :21/10/2014
(21) Application No.8838/DELNP/2014 A
(43) Publication Date : 22/05/2015

(54) Title of the invention : MULTI LAYER FILM WITH IMPROVED MODULUS PROPERTIES

(51) International classification :C08J5/18,C08L67/02,C08L69/00
(31) Priority Document No :PCT/US2012/037745
(32) Priority Date :14/05/2012
(33) Name of priority country :U.S.A.
(86) International Application No :PCT/EP2013/059701
Filing Date :10/05/2013
(87) International Publication No :WO 2013/171124
(61) Patent of Addition to Application Number :NA
Filing Date :NA
(62) Divisional to Application Number :NA
Filing Date :NA

(71)**Name of Applicant :**
1)BAYER MATERIALSCIENCE AG
Address of Applicant :51368 Leverkusen Germany
(72)**Name of Inventor :**
1)PUDLEINER Heinz
2)MEYER Klaus
3)WINKLER J¼rgen
4)BR„UER Wolfgang
5)NICKEL Joerg
6)PEHLERT Craig

(57) Abstract :
The invention relates to a multi layer preferably co extruded plastic film with improved modulus properties which is suitable in particular for producing three dimensionally shaped articles.

No. of Pages : 44 No. of Claims : 18

(12) PATENT APPLICATION PUBLICATION
(19) INDIA
(22) Date of filing of Application :22/10/2014
(21) Application No.8860/DELNP/2014 A
(43) Publication Date : 22/05/2015

(54) Title of the invention : HYDRAULIC LASH ADJUSTER

(51) International classification :F01L13/06,F01L1/24,F01L1/25
(31) Priority Document No :12164705.1
(32) Priority Date :19/04/2012
(33) Name of priority country :EPO
(86) International Application No :PCT/EP2013/058210
Filing Date :19/04/2013
(87) International Publication No :WO 2013/156612
(61) Patent of Addition to Application Number :NA
Filing Date :NA
(62) Divisional to Application Number :NA
Filing Date :NA

(71)**Name of Applicant :**
1)EATON SRL
Address of Applicant :Via Orvieto 19 I 10149 Torino Italy
(72)**Name of Inventor :**
1)CECUR Majo

(57) Abstract :
A hydraulic lash adjuster is provided with a pressure relief valve operable to release oil from the lash adjuster s oil chamber to enable the hydraulic lash adjuster to be able to retract when required.

No. of Pages : 26 No. of Claims : 15

(12) PATENT APPLICATION PUBLICATION
(19) INDIA
(22) Date of filing of Application :22/10/2014
(21) Application No.8861/DELNP/2014 A
(43) Publication Date : 22/05/2015

(54) Title of the invention : FLAME RETARDANT POLYMER COMPOSITION

(51) International classification :C08K3/00,C08K3/26,C08L23/08
(31) Priority Document No :12002996.2
(32) Priority Date :27/04/2012
(33) Name of priority country :EPO
(86) International Application No :PCT/EP2013/001278
Filing Date :29/04/2013
(87) International Publication No :WO 2013/159942
(61) Patent of Addition to Application Number :NA
Filing Date :NA
(62) Divisional to Application Number :NA
Filing Date :NA

(71)**Name of Applicant :**
1)BOREALIS AG
Address of Applicant :IZD Tower Wagramerstrae 17 19 A 1220 Vienna Austria
(72)**Name of Inventor :**
1)ANDREASSON Urban
2)UEMATSU Takashi
3)SULTAN Bernt …ke
4)ANKER Martin
5)PRIETO Oscar

(57) Abstract :
The present invention relates to a flame retardant polymer composition comprising a crosslinkable terpolymer comprising ethylene monomer units a silane group containing comonomer units and comonomer units comprising a polar group; a metal carbonate filler and a silicone fluid or gum; wherein the content of the comonomer units comprising a polar group is between 2 and 25wt% of the terpolymer and the content of the silane group containing comonomer units is between 0.2 and 4 wt% of the terpolymer. The present invention is also directed to the process for the production of the polymer composition to a cable and/or to an electrical device having a layer comprising said polymer composition and uses thereof.

No. of Pages : 31 No. of Claims : 13

(12) PATENT APPLICATION PUBLICATION
(19) INDIA
(22) Date of filing of Application :20/10/2014
(21) Application No.8827/DELNP/2014 A
(43) Publication Date : 22/05/2015

(54) Title of the invention : PREVENTING OR TREATING PERIODONTAL DISEASE

(51) International classification :A61K33/40,A61C17/00,A61C19/06
(31) Priority Document No :13/437553
(32) Priority Date :02/04/2012
(33) Name of priority country :U.S.A.
(86) International Application No :PCT/CA2013/000314
Filing Date :02/04/2013
(87) International Publication No :WO 2013/149322
(61) Patent of Addition to Application Number :NA
Filing Date :NA
(62) Divisional to Application Number :NA
Filing Date :NA

(71)**Name of Applicant :**
1)KLOX TECHNOLOGIES INC.
Address of Applicant :275 Boulevard Armand Frappier Laval Qubec H7V 4A7 Canada
(72)**Name of Inventor :**
1)PIERGALLINI Remigio
2)LOUPIS Nikolaos
3)RASTOGI Shipra

(57) Abstract :
The disclosure relates to a method for treating or preventing periodontal disease such as gingivitis or periodontitis. The method may comprise providing an antimicrobial composition disposed within a reservoir the reservoir being fluidly connected to an exterior surface of an applicator having a frictional stress value sufficient to cause mechanical displacement of a biofilm present on an oral cavity surface; dispensing said antimicrobial composition through said applicator onto said exterior surface of said applicator; applying the antimicrobial composition to the oral cavity surface; and rubbing said applicator onto said oral cavity surface and exerting pressure towards said oral cavity surface.

No. of Pages : 34 No. of Claims : 83

(12) PATENT APPLICATION PUBLICATION
(19) INDIA
(22) Date of filing of Application :20/10/2014
(21) Application No.8828/DELNP/2014 A
(43) Publication Date : 22/05/2015

(54) Title of the invention : ACTUATING DEVICE FOR MOVING A THRUST REVERSER

(51) International classification :F02K1/76,F16H25/24
(31) Priority Document No :1253693
(32) Priority Date :23/04/2012
(33) Name of priority country :France
(86) International Application No :PCT/EP2013/058386
Filing Date :23/04/2013
(87) International Publication No :WO 2013/160298
(61) Patent of Addition to Application Number :NA
Filing Date :NA
(62) Divisional to Application Number :NA
Filing Date :NA

(71)**Name of Applicant :**
1)SAGEM DEFENSE SECURITE
Address of Applicant :18 20 Quai du Point du Jour F 92100 Boulogne Billancourt France
2)AIRCELLE
(72)**Name of Inventor :**
1)BASTIDE Christophe
2)DELNAUD Franck
3)WERQUIN Mickael
4)PLANQUET Nicolas
5)COPPEE Pascal
6)FADINI Rinaldo
7)MORADELL CASELLAS Pierre

(57) Abstract :
The invention concerns an actuating device (1) for moving a mobile cover of a thrust reverser comprising: an actuator (5) comprising a first element (10) such as a screw and a second element (12) such as a nut mounted mobile relative to the first element (10) such that the rotation of the first element (10) results in a translational movement of the second element (12) relative to the first element (10) and a locking device (31) comprising a rotating part (34) linked in rotation with the first element (10) and a locking part (35) that is mobile relative to the rotating part (34) between a locked position in which the locking part (35) is engaged with the rotating part (34) to prevent the first element (10) from rotating and an unlocked position in which the locking part (35) is disengaged from the rotating part to allow the rotation of the first element (10) and an electromagnet (39) for moving the locking part (35) to the unlocked position.

No. of Pages : 37 No. of Claims : 19

(12) PATENT APPLICATION PUBLICATION
(19) INDIA
(22) Date of filing of Application :20/10/2014
(21) Application No.8829/DELNP/2014 A
(43) Publication Date : 22/05/2015

(54) Title of the invention : SYSTEM AND METHOD FOR MULTIPHASIC RELEASE OF GROWTH FACTORS

(51) International classification :A61K9/00,A61K38/18,A61K47/02
(31) Priority Document No :PCT/CA2012/050234
(32) Priority Date :11/04/2012
(33) Name of priority country :Canada
(86) International Application No :PCT/CA2012/050738
Filing Date :17/10/2012
(87) International Publication No :WO 2013/152418
(61) Patent of Addition to Application Number :NA
Filing Date :NA
(62) Divisional to Application Number :NA
Filing Date :NA

(71)**Name of Applicant :**
1)INDUCE BIOLOGICS INC.
Address of Applicant :180 Dundas St West Suite 1702 Toronto Ontario M5G 1Z8 Canada
(72)**Name of Inventor :**
1)CLOKIE Cameron M. L.
2)PEEL Sean A. F.

(57) Abstract :
A system for multiphasic delivery of at least one growth factor at a treatment site comprises a delivery vehicle for releasing at least one growth factor in an initial release profile and a carrier for releasing at least one growth factor in a sustained release profile. The initial release profile releases at least one growth factor over a period of hours to days wherein the growth factor is released in a large amount initially with the remainder being released in progressively lower amounts. The sustained release profile releases at least one growth factor over a period of days to weeks wherein the growth factor is released at a generally constant amount over such period. The system of the invention is particularly suited for applications on bioimplants. The invention also comprises methods and kits for multiphasic delivery of at least one growth factor. The invention also comprises calcium sulphate as a carrier for releasing at least one growth factor in both single and multiphasic systems for delivering at least one growth factor at a treatment site.

No. of Pages : 72 No. of Claims : 90

(12) PATENT APPLICATION PUBLICATION
(19) INDIA
(22) Date of filing of Application :21/10/2014
(21) Application No.8831/DELNP/2014 A
(43) Publication Date : 22/05/2015

(54) Title of the invention : COMPOSITIONS AND METHODS FOR QUANTIFYING A NUCLEIC ACID SEQUENCE IN A SAMPLE

(51) International classification :C12Q1/68,C12Q1/00,C12N15/11
(31) Priority Document No :61/621975
(32) Priority Date :09/04/2012
(33) Name of priority country :U.S.A.
(86) International Application No :PCT/US2013/035750
Filing Date :09/04/2013
(87) International Publication No :WO 2013/155056
(61) Patent of Addition to Application Number :NA
Filing Date :NA
(62) Divisional to Application Number :NA
Filing Date :NA

(71)**Name of Applicant :**
1)ENVIROLOGIX INC.
Address of Applicant :500 Riverside Industrial Parkway Portland ME 04103 U.S.A.
(72)**Name of Inventor :**
1)SHAFFER Daniel
2)JUDICE Stephen A.

(57) Abstract :
The present invention features compositions and methods for quantifying detection of a target oligonucleotide in a sample in real time. These methods are compatible with target oligonucleotides amplified using a NEAR reaction.

No. of Pages : 54 No. of Claims : 49

(12) PATENT APPLICATION PUBLICATION
(19) INDIA
(22) Date of filing of Application :16/10/2014
(21) Application No.8703/DELNP/2014 A
(43) Publication Date : 22/05/2015

(54) Title of the invention : A NON INVASIVE BIO FLUID DETECTOR AND PORTABLE SENSOR TRANSMITTER RECEIVER SYSTEM

(51) International classification	:A61B5/145,A61B5/1455,H04B1/38
(31) Priority Document No	:61/617545
(32) Priority Date	:29/03/2012
(33) Name of priority country	:U.S.A.
(86) International Application No	:PCT/US2013/034361
Filing Date	:28/03/2013
(87) International Publication No	:WO 2013/149011
(61) Patent of Addition to Application Number	:NA
Filing Date	:NA
(62) Divisional to Application Number	:NA
Filing Date	:NA

(71)**Name of Applicant :**
1)THE JOHNS HOPKINS UNIVERSITY
Address of Applicant :3400 North Charles Street Baltimore Maryland 21218 U.S.A.
(72)**Name of Inventor :**
1)ACHARYA Soumyadipta
2)CHEN William
3)OH Phillip J.
4)DOONG Judy C.
5)GREENBAUM Noah Lampel
6)BARROS Guilherme
7)CHEN George Major
8)YIN David

(57) Abstract :
The present invention is directed to a bio fluid detector such as a hemoglobin detector having the capability of receiving storing and transmitting health information utilizing a portable transmitter and receiver including electronic PDAs such as cell phones. Further the present invention utilizes a non invasive hemoglobin detector that is connected to a portable transmitter receiver such as PDAs including but not limited to cell phones.

No. of Pages : 29 No. of Claims : 20

(12) PATENT APPLICATION PUBLICATION
(19) INDIA
(22) Date of filing of Application :15/10/2014
(21) Application No.8705/DELNP/2014 A
(43) Publication Date : 22/05/2015

(54) Title of the invention : DEVICE FOR ELECTRICALLY DRIVING A LONGITUDINAL ADJUSTMENT MECHANISM FOR A VEHICLE SEAT

(51) International classification :B60N2/02,B60N2/06,B60N2/07
(31) Priority Document No :10 2012 007 760.2
(32) Priority Date :20/04/2012
(33) Name of priority country :Germany
(86) International Application No:PCT/EP2013/058138
Filing Date :19/04/2013
(87) International Publication No :WO 2013/156580
(61) Patent of Addition to Application Number :NA
Filing Date :NA
(62) Divisional to Application Number :NA
Filing Date :NA

(71)**Name of Applicant :**
1)JOHNSON CONTROLS GMBH
Address of Applicant :Industriestrae 20 30 51399 Burscheid Germany
2)KAPPEL Andreas
(72)**Name of Inventor :**
1)KIENKE Ingo

(57) Abstract :
The invention relates to a device for electrically driving a longitudinal adjustment mechanism for a vehicle seat said mechanism comprising two individual rails (1). According to the invention the device for electrically driving a longitudinal adjustment mechanism for a vehicle seat comprises a separate electric driving means (6) for each individual rail (1) each of the driving means (6) being designed as an electromechanically actuated planetary gear assembly.

No. of Pages : 30 No. of Claims : 9

(12) PATENT APPLICATION PUBLICATION
(19) INDIA
(22) Date of filing of Application :17/10/2014
(21) Application No.8706/DELNP/2014 A
(43) Publication Date : 22/05/2015

(54) Title of the invention : IMPROVEMENTS IN OR RELATING TO DEFORMABLE MEMBRANE ASSEMBLIES

(51) International classification :G02C7/08,G02B3/14
(31) Priority Document No :1205394.8
(32) Priority Date :27/03/2012
(33) Name of priority country :U.K.
(86) International Application No :PCT/GB2013/050747
Filing Date :22/03/2013
(87) International Publication No :WO 2013/144592
(61) Patent of Addition to Application Number :NA
Filing Date :NA
(62) Divisional to Application Number :NA
Filing Date :NA

(71)**Name of Applicant :**
1)ADLENS LIMITED
Address of Applicant :The Old School First Turn Oxford Oxfordshire OX2 8AH U.K.
(72)**Name of Inventor :**
1)PIETROPINTO Mr. Dijon
2)RHODES Mr. Daniel Paul
3)EDGINGTON Mr. Alex
4)STEVENS Robert Edward
5)HOLLAND Benjamin Tristram

(57) Abstract :
A deformable membrane assembly 1 comprising a fixed support; a fluid filled envelope one wall of which is formed by an elastic membrane 8 that is held under tension around its edge by a flexible membrane supporting member 2 10 the membrane supporting member being coupled to the fixed support at a plurality of discrete control points 120 round the supporting member by respective engaging members for controlling the position of the membrane edge relative to the fixed support at the control points and the member being unconstrained between said control points; and a selectively operable pressure adjuster for adjusting the pressure of the fluid within the envelope thereby to adjust the shape of the membrane; wherein at least three control points are provided which are situated round the membrane edge at spaced locations on the member that are selected to increase the energy of the lowest order out of plane bending modes of the supporting member in response to loading through tension in the membrane that do not have a node round the whole supporting member. The invention further provides an article of eyewear comprising a deformable membrane assembly of the types described.

No. of Pages : 57 No. of Claims : 23

(12) PATENT APPLICATION PUBLICATION
(19) INDIA
(22) Date of filing of Application :17/10/2014
(21) Application No.8707/DELNP/2014 A
(43) Publication Date : 22/05/2015

(54) Title of the invention : DEVICE USEFUL FOR HYDROGENATION REACTIONS (II)

(51) International classification :B01J19/24,B01J19/02,B01J10/00
(31) Priority Document No :12164525.3
(32) Priority Date :18/04/2012
(33) Name of priority country :EPO
(86) International Application No :PCT/EP2013/057951
Filing Date :17/04/2013
(87) International Publication No :WO 2013/156502
(61) Patent of Addition to Application Number :NA
Filing Date :NA
(62) Divisional to Application Number :NA
Filing Date :NA

(71)**Name of Applicant :**
1)DSM IP ASSETS B.V.
Address of Applicant :Patent Department Het Overloon 1 NL 6411 The Heerlen Netherlands
(72)**Name of Inventor :**
1)BONRATH Werner

(57) Abstract :
The present invention relates to a device for treatment of material transported through the device comprising at least one porous element consisting of specific solid metallic structure which allows cross flow of the material through the porous element and wherein the porous element is coated by a non acidic metal oxide which is impregnated by palladium (Pd).

No. of Pages : 19 No. of Claims : 14

(12) PATENT APPLICATION PUBLICATION
(19) INDIA
(22) Date of filing of Application :17/10/2014
(21) Application No.8708/DELNP/2014 A
(43) Publication Date : 22/05/2015

(54) Title of the invention : DEVICE USEFUL FOR HYDROGENATION REACTIONS (I)

(51) International classification :B01J10/00,B01J12/00,B01J19/02
(31) Priority Document No :12164521.2
(32) Priority Date :18/04/2012
(33) Name of priority country :EPO
(86) International Application No :PCT/EP2013/057952
Filing Date :17/04/2013
(87) International Publication No :WO 2013/156503
(61) Patent of Addition to Application Number :NA
Filing Date :NA
(62) Divisional to Application Number :NA
Filing Date :NA

(71)**Name of Applicant :**
1)DSM IP ASSETS B.V.
Address of Applicant :Patent Department Het Overloon 1 NL 6411 The Heerlen Netherlands
(72)**Name of Inventor :**
1)BONRATH Werner

(57) Abstract :
The present invention relates to a device for treatment of material transported through the device comprising at least one porous element consisting of specific solid metallic structure which allows cross flow of the material through the porous element and wherein the porous element is coated by a non acidic metal oxide which is impregnated by palladium (Pd).

No. of Pages : 23 No. of Claims : 16

(12) PATENT APPLICATION PUBLICATION
(21) Application No.8811/DELNP/2014 A
(19) INDIA
(22) Date of filing of Application :20/10/2014
(43) Publication Date : 22/05/2015

(54) Title of the invention : COMPOSITION AND PROCESS FOR THE RETANNING AND FATLIQUORING OF LEATHER AND THE LEATHER PREPARED

(51) International classification :C14C3/20,C14C9/02
(31) Priority Document No :2008666
(32) Priority Date :20/04/2012
(33) Name of priority country :Netherlands
(86) International Application No :PCT/NL2013/050275
Filing Date :17/04/2013
(87) International Publication No :WO 2013/157941
(61) Patent of Addition to Application Number :NA
Filing Date :NA
(62) Divisional to Application Number :NA
Filing Date :NA

(71)**Name of Applicant :**
1)STAHL INTERNATIONAL B.V.
Address of Applicant :Sluisweg 10 NL 5145 PE Waalwijk Netherlands
(72)**Name of Inventor :**
1)KOMFORTH Reiner

(57) Abstract :
The present invention relates to compositions for the retanning and fatliquoring of pre tanned leather to the process of preparing such compositions to the use of these compositions for the preparation of leather (the term leather encompassing fur skins or pelts) as well as a novel type of leather that is obtainable by the use of these compositions.

No. of Pages : 24 No. of Claims : 15

(12) PATENT APPLICATION PUBLICATION
(19) INDIA
(22) Date of filing of Application :20/10/2014
(21) Application No.8812/DELNP/2014 A
(43) Publication Date : 22/05/2015

(54) Title of the invention : COMPOSITION AND METHODS FOR HIGHLY EFFICIENT GENE TRANSFER USING AAV CAPSID VARIANTS

(51) International classification	:C12N15/864,C12N7/01,C07K14/015
(31) Priority Document No	:61/635273
(32) Priority Date	:18/04/2012
(33) Name of priority country	:U.S.A.
(86) International Application No	:PCT/US2013/037170
Filing Date	:18/04/2013
(87) International Publication No	:WO 2013/158879
(61) Patent of Addition to Application Number	:NA
Filing Date	:NA
(62) Divisional to Application Number	:NA
Filing Date	:NA

(71)**Name of Applicant :**
1)THE CHILDRENS HOSPITAL OF PHILADELPHIA
Address of Applicant :34th Street & Civic Center Boulevard Philadelphia PA 19104 U.S.A.
(72)**Name of Inventor :**
1)YAZICIOGLU Mustafa N.
2)MINGOZZI Federico
3)ANGUELA Xavier
4)HIGH Katherine A.

(57) Abstract :
Improved compositions and methods for AAV mediated gene therapy are disclosed.

No. of Pages : 75 No. of Claims : 23

(12) PATENT APPLICATION PUBLICATION
(19) INDIA
(22) Date of filing of Application :20/10/2014
(21) Application No.8813/DELNP/2014 A
(43) Publication Date : 22/05/2015

(54) Title of the invention : HYBRID FIBER UNIDIRECTIONAL TAPE AND COMPOSITE LAMINATES

(51) International classification :D04H1/4382,F41H1/02,D03D15/00
(31) Priority Document No :61/648520
(32) Priority Date :17/05/2012
(33) Name of priority country :U.S.A.
(86) International Application No :PCT/US2013/038137
Filing Date :25/04/2013
(87) International Publication No :WO 2013/173035
(61) Patent of Addition to Application Number :NA
Filing Date :NA
(62) Divisional to Application Number :NA
Filing Date :NA

(71)**Name of Applicant :**
1)HONEYWELL INTERNATIONAL INC.
Address of Applicant :Patent Services M/S AB/2B 101 Columbia Road P. O. Box 2245 Morristown New Jersey 07962 2245 U.S.A.
(72)**Name of Inventor :**
1)ARVIDSON Brian D.
2)BHATNAGAR Ashok
3)HURST David A.
4)RAMSDELL Robert C.
5)WAGNER Lori L.

(57) Abstract :
Ballistic resistant materials and articles formed from fiber/tape plies that incorporate multiple different fiber or tape types within a single ply. The different fiber or tape types are physically dissimilar but may be chemically different or substantially chemically similar.

No. of Pages : 40 No. of Claims : 10

(12) PATENT APPLICATION PUBLICATION
(19) INDIA
(22) Date of filing of Application :20/10/2014
(21) Application No.8816/DELNP/2014 A
(43) Publication Date : 22/05/2015

(54) Title of the invention : NON FRIED POTATO CHIPS

(51) International classification :A23L1/217
(31) Priority Document No :2012077619
(32) Priority Date :29/03/2012
(33) Name of priority country :Japan
(86) International Application No :PCT/JP2013/001658
Filing Date :13/03/2013
(87) International Publication No :WO 2013/145601
(61) Patent of Addition to Application Number :NA
Filing Date :NA
(62) Divisional to Application Number :NA
Filing Date :NA

(71)**Name of Applicant :**
1)NISSIN FOODS HOLDINGS CO. LTD.
Address of Applicant :1 1 Nishinakajima 4 chome Yodogawa ku Osaka shi Osaka 5328524 Japan
(72)**Name of Inventor :**
1)ONISHI Atsushi
2)MIYAZAKI Yoshifumi
3)TANAKA Mitsuru

(57) Abstract :
Provided are non fried potato chips which have a reduced oil content because of being produced without frying in oil yet show a sufficient crispy texture and high meltability in mouth that cannot be achieved by conventional non fried potato chips and therefore are in no way inferior to potato chips produced by frying in oil. The non fried potato chips have been sufficiently puffed inside and have a number of pores. More specifically when a vertical section is observed the non fried potato chips show 10/mm or more of pores having a shorter diameter of 20 μm or longer and a porosity of 35 65%.

No. of Pages : 53 No. of Claims : 7

(12) PATENT APPLICATION PUBLICATION
(19) INDIA
(22) Date of filing of Application :20/10/2014
(21) Application No.8817/DELNP/2014 A
(43) Publication Date : 22/05/2015

(54) Title of the invention : DRYING METHOD AND DRYING DEVICE OF INSTANT NOODLES

(51) International classification :A23L1/162,A23L1/16
(31) Priority Document No :2012081792
(32) Priority Date :30/03/2012
(33) Name of priority country :Japan
(86) International Application No :PCT/JP2013/001823
Filing Date :18/03/2013
(87) International Publication No :WO 2013/145626
(61) Patent of Addition to Application Number :NA
Filing Date :NA
(62) Divisional to Application Number :NA
Filing Date :NA

(71)**Name of Applicant :**
1)NISSIN FOODS HOLDINGS CO. LTD.
Address of Applicant :1 1 Nishinakajima 4 chome Yodogawa ku Osaka shi Osaka 5328524 Japan
(72)**Name of Inventor :**
1)ASAHINA Takeshi
2)HIBI Takaaki
3)MACHIDA Noriyuki
4)TANAKA Mitsuru

(57) Abstract :
The purpose of the present invention is to provide a method of drying instant non fry noodles for obtaining non fry instant noodles which do not stick to each other separate easily and have excellent reconstitution properties. The non fry instant noodle drying process includes a step for injecting gelatinized noodles into a drying retainer and drying the noodles by blowing a high speed air stream from above the retainer onto the noodle mass. Further in said drying step the retainer is formed such that the transition portion from the bottom surface to the lateral surface (side wall portion) is a curved surface with a radius of curvature of 5 15mm and preferably the high speed air stream is blown such that the air speed to which the noodles are exposed is greater than or equal to 50m/s.

No. of Pages : 25 No. of Claims : 6

(12) PATENT APPLICATION PUBLICATION
(19) INDIA
(22) Date of filing of Application :20/10/2014
(21) Application No.8818/DELNP/2014 A
(43) Publication Date : 22/05/2015

(54) Title of the invention : METHOD AND DEVICE FOR DRYING INSTANT NOODLES

(51) International classification :A23L1/162,A23L1/16,F26B3/06
(31) Priority Document No :2012081357
(32) Priority Date :30/03/2012
(33) Name of priority country :Japan
(86) International Application No :PCT/JP2013/001822
Filing Date :18/03/2013
(87) International Publication No :WO 2013/145625
(61) Patent of Addition to Application Number :NA
Filing Date :NA
(62) Divisional to Application Number :NA
Filing Date :NA

(71)**Name of Applicant :**
1)NISSIN FOODS HOLDINGS CO. LTD.
Address of Applicant :1 1 Nishinakajima 4 chome Yodogawa ku Osaka shi Osaka 5328524 Japan
(72)**Name of Inventor :**
1)ASAHINA Takeshi
2)HIBI Takaaki
3)MACHIDA Noriyuki
4)TANAKA Mitsuru

(57) Abstract :
The present invention addresses the problem of providing a method of drying non fried noodles in order to obtain non fried noodles in which individual noodles do not stick together and the noodles come apart more easily and have excellent restorability. In the present invention a step for drying non fried noodles comprises a step for feeding alphaized noodles into a retainer either having small holes on a bottom surface the total surface area of the small holes being 30% or less of the surface area of the bottom surface or not having small holes on the bottom surface i.e. a retainer having an aperture ratio of 0 30% and blowing a high speed air flow preferably an air flow having a wind speed of 50 m/s or higher onto the individual noodles on the retainer from above the retainer.

No. of Pages : 24 No. of Claims : 6

(12) PATENT APPLICATION PUBLICATION
(19) INDIA
(22) Date of filing of Application :17/10/2014
(21) Application No.8730/DELNP/2014 A
(43) Publication Date : 22/05/2015

(54) Title of the invention : SELECTIVELY PERFORATED GRAPHENE MEMBRANES FOR COMPOUND HARVEST CAPTURE AND RETENTION

(51) International classification :B01D63/08,B01D65/02,B01D71/02
(31) Priority Document No :61/635378
(32) Priority Date :19/04/2012
(33) Name of priority country :U.S.A.
(86) International Application No :PCT/US2013/035375
Filing Date :05/04/2013
(87) International Publication No :WO 2013/158378
(61) Patent of Addition to Application Number :NA
Filing Date :NA
(62) Divisional to Application Number :NA
Filing Date :NA

(71)**Name of Applicant :**
1)LOCKHEED MARTIN CORPORATION
Address of Applicant :6801 Rockledge Drive Bethesda Maryland 20817 U.S.A.
(72)**Name of Inventor :**
1)STETSON JR. John B.
2)VISS Stanley J.

(57) Abstract :
Devices and related methods for arresting and retaining molecules from solution upon the surface of a perforated graphene membrane with plural apertures selected to allow passage of the solutions solvent while simultaneously arresting desired molecules upon the surface of the membrane. The method continues with arranging the perforated graphene membranes in a sequence of successively smaller plural aperture diameters to arrest and retain successively smaller molecules in series. The dislodging devices include electromagnetic electromechanical and electrostatic configurations.

No. of Pages : 33 No. of Claims : 14

(12) PATENT APPLICATION PUBLICATION
(19) INDIA
(22) Date of filing of Application :17/10/2014
(21) Application No.8732/DELNP/2014 A
(43) Publication Date : 22/05/2015

(54) Title of the invention : A PROCESS FOR THE PRODUCTION OF METHACRYLIC ACID AND ITS DERIVATIVES AND POLYMERS PRODUCED THEREFROM

(51) International classification :C08F20/06,C07C51/38
(31) Priority Document No :1207388.8
(32) Priority Date :27/04/2012
(33) Name of priority country :U.K.
(86) International Application No :PCT/GB2013/051080
Filing Date :26/04/2013
(87) International Publication No :WO 2013/160702
(61) Patent of Addition to Application Number :NA
Filing Date :NA
(62) Divisional to Application Number :NA
Filing Date :NA

(71)**Name of Applicant :**
1)LUCITE INTERNATIONAL UK LIMITED
Address of Applicant :Cumberland House 15 17 Cumberland Place Southampton Hampshire SO15 2BG U.K.
(72)**Name of Inventor :**
1)EASTHAM Graham Ronald
2)JOHNSON David William
3)WAUGH Mark

(57) Abstract :
A process for the production of methacrylic acid or esters thereof by the base catalysed decarboxylation of at least one dicarboxylic acid selected from itaconic citraconic or mesaconic acid or mixtures thereof in an aqueous reaction medium is described. The decarboxylation is carried out at a temperature in the range from 200°C and up to 239°C. The methacrylic acid is isolated from the aqueous reaction medium by a purification process which does not include introducing an organic solvent to the aqueous reaction medium for solvent extraction of the methacrylic acid into an organic phase. A method of preparing polymers or copolymers of methacrylic acid or methacrylic acid esters is also described.

No. of Pages : 43 No. of Claims : 23

(12) PATENT APPLICATION PUBLICATION
(19) INDIA
(22) Date of filing of Application :17/10/2014
(21) Application No.8733/DELNP/2014 A
(43) Publication Date : 22/05/2015

(54) Title of the invention : PRESSURE SENSITIVE ADHESIVES BASED ON RENEWABLE RESOURCES UV CURING AND RELATED METHODS

(51) International classification :A23D9/00,A61K8/92,C09J133/14
(31) Priority Document No :61/621681
(32) Priority Date :09/04/2012
(33) Name of priority country :U.S.A.
(86) International Application No :PCT/US2012/067963
Filing Date :05/12/2012
(87) International Publication No :WO 2013/154610
(61) Patent of Addition to Application Number :NA
Filing Date :NA
(62) Divisional to Application Number :NA
Filing Date :NA

(71)**Name of Applicant :**
1)AVERY DENNISON CORPORATION
Address of Applicant :150 N. Orange Grove Blvd. Pasadena CA 91103 U.S.A.
(72)**Name of Inventor :**
1)KOCH Carol A.
2)PATHAK Srikant

(57) Abstract :
One embodiment is a pressure sensitive adhesive label or tape that comprises a facestock and a pressure sensitive adhesive composition disposed on the facestock and the pressure sensitive adhesive composition includes a product made from reacting an epoxidized naturally occurring oil or fat with a dimer acid. Another embodiment of the invention is a method that comprises reacting an epoxidized naturally occurring oil or fat with a dimer acid to form a PSA precursor; coating the PSA precursor onto a carrier and curing the PSA precursor via UV radiation to form a pressure sensitive adhesive.

No. of Pages : 38 No. of Claims : 7

(12) PATENT APPLICATION PUBLICATION
(21) Application No.8734/DELNP/2014 A
(19) INDIA
(22) Date of filing of Application :17/10/2014
(43) Publication Date : 22/05/2015

(54) Title of the invention : PRINTER THAT CAN PERFORM WIRELESS COMMUNICATION WELL REGARDLESS OF THE ENVIRONMENT IN WHICH SAID PRINTER IS SET UP

(51) International classification :B41J29/00
(31) Priority Document No :2012118581
(32) Priority Date :24/05/2012
(33) Name of priority country :Japan
(86) International Application No :PCT/JP2013/062876
Filing Date :26/04/2013
(87) International Publication No :WO 2013/175957
(61) Patent of Addition to Application Number :NA
Filing Date :NA
(62) Divisional to Application Number :NA
Filing Date :NA

(71)**Name of Applicant :**
1)NEC PLATFORMS LTD.
Address of Applicant :2 6 1 Kitamikata Takatsu ku Kawasaki shi Kanagawa 2138511 Japan
(72)**Name of Inventor :**
1)IWANAGA Yuji

(57) Abstract :
This printer which has wireless communication functionality is provided with an antenna (321f) in a front surface (110f) where space requiring parts that require space in front of the housing (110) are provided namely a paper containing unit cover (130f) for replacing paper and a paper discharge opening (120f).

No. of Pages : 17 No. of Claims : 8

(12) PATENT APPLICATION PUBLICATION
(19) INDIA
(22) Date of filing of Application :22/10/2014
(21) Application No.8870/DELNP/2014 A
(43) Publication Date : 22/05/2015

(54) Title of the invention : INJECTABLE FORMULATION

(51) International classification :A61K31/496,A61K9/10,A61K47/02
(31) Priority Document No :61/636932
(32) Priority Date :23/04/2012
(33) Name of priority country :U.S.A.
(86) International Application No :PCT/JP2013/061950
Filing Date :23/04/2013
(87) International Publication No :WO 2013/161830
(61) Patent of Addition to Application Number :NA
Filing Date :NA
(62) Divisional to Application Number :NA
Filing Date :NA

(71)**Name of Applicant :**
1)OTSUKA PHARMACEUTICAL CO. LTD.
Address of Applicant :9 Kanda Tsukasamachi 2 chome Chiyoda ku Tokyo 1018535 Japan
(72)**Name of Inventor :**
1)SATO Tetsuya
2)MINOWA Takuya
3)HOSHIKA Yusuke
4)TOYOFUKU Hidekazu

(57) Abstract :
The present invention addresses the problem 0 1 nroviding a sustamed-release injectable formulauon for releasing a therapeutically effective amount 0 1 /-[4-(4-benzo[b]thiophene-4-yl-piperazine-l-yl)butoxy]- lH-quinoline-2-one in at least one week, as a long-acting form o f drug administration for 7-[4-(4-benzo[b]thiophene-4-yl-piperazine-l-yl)butoxy]- lH-quinoline-2-one. The present invention provides an injectable formulation the concentration o f which i n the blood can b e sustained for at least one week, the formulation comprising 7-[4-(4-benzo[b]thiophene-4-yl-piperazine-l-yl)butoxyl-lH-quinoline-2-one or a salt thereof as an active ingredient.

No. of Pages : 75 No. of Claims : 13

(12) PATENT APPLICATION PUBLICATION
(21) Application No.8694/DELNP/2014 A
(19) INDIA
(22) Date of filing of Application :16/10/2014
(43) Publication Date : 22/05/2015

(54) Title of the invention : METHOD AND APPARATUS FOR ACCELERATING CONNECTIONS IN A CLOUD NETWORK

(51) International classification :H04L29/06,H04L29/08
(31) Priority Document No :13/466251
(32) Priority Date :08/05/2012
(33) Name of priority country :U.S.A.
(86) International Application No :PCT/US2013/034212
Filing Date :28/03/2013
(87) International Publication No :WO 2013/169409
(61) Patent of Addition to Application Number :NA
Filing Date :NA
(62) Divisional to Application Number :NA
Filing Date :NA

(71)**Name of Applicant :**
1)ALCATEL LUCENT
Address of Applicant :148/152 route de la Reine F 92100 Boulogne Billancourt France
(72)**Name of Inventor :**
1)PUTTASWAMY NAGA Krishna P.
2)GUO Katherine

(57) Abstract :
Various embodiments provide a method and apparatus of providing accelerated encrypted connections in a cloud network supporting transmission of data including per user encrypted data. Transmission of encrypted data from an application server uses an encryption scheme that encrypts static data using a first encryption scheme that derives keys from the content itself and encrypts dynamic data such as dynamic website content with personalized user data using a second encryption scheme.

No. of Pages : 30 No. of Claims : 10

(12) PATENT APPLICATION PUBLICATION
(19) INDIA
(22) Date of filing of Application :16/10/2014
(21) Application No.8695/DELNP/2014 A
(43) Publication Date : 22/05/2015

(54) Title of the invention : PROTEINS TOXIC TO HEMIPTERAN INSECT SPECIES

(51) International classification :C07K14/325,C12N15/05,A01H1/00
(31) Priority Document No :61/621436
(32) Priority Date :06/04/2012
(33) Name of priority country :U.S.A.
(86) International Application No :PCT/US2013/035388
Filing Date :05/04/2013
(87) International Publication No :WO 2013/152264
(61) Patent of Addition to Application Number :NA
Filing Date :NA
(62) Divisional to Application Number :NA
Filing Date :NA

(71)**Name of Applicant :**
1)MONSANTO TECHNOLOGY LLC
Address of Applicant :800 North Lindbergh Blvd. St. Louis Missouri 63167 U.S.A.
(72)**Name of Inventor :**
1)BAUM James A.
2)EVDOKIMOV Artem G.
3)MOSHIRI Farhad
4)RYDEL Timothy J.
5)STURMAN Eric J.
6)VON RECHENBERG Moritz
7)VU Halong
8)WOLLACOTT Andrew M.
9)ZHENG Meiying

(57) Abstract :
The present invention discloses Hemipteran insect inhibitory proteins methods of using such proteins nucleotide sequences encoding such proteins methods of detecting and isolating such proteins and their use in agricultural systems.

No. of Pages : 92 No. of Claims : 20

(12) PATENT APPLICATION PUBLICATION
(19) INDIA
(22) Date of filing of Application :16/10/2014
(21) Application No.8697/DELNP/2014 A
(43) Publication Date : 22/05/2015

(54) Title of the invention : PT PD DIESEL OXIDATION CATALYST WITH CO/HC LIGHT OFF AND HC STORAGE FUNCTION

(51) International classification :B01J29/035,B01J37/02,B01D53/94
(31) Priority Document No :NA
(32) Priority Date :NA
(33) Name of priority country :NA
(86) International Application No :PCT/US2012/032319
Filing Date :05/04/2012
(87) International Publication No :WO 2013/151549
(61) Patent of Addition to Application Number :NA
Filing Date :NA
(62) Divisional to Application Number :NA
Filing Date :NA

(71)**Name of Applicant :**
1)BASF CORPORATION
Address of Applicant :100 Park Avenue Florham Park New Jersey 07932 U.S.A.
2)BASF SE
(72)**Name of Inventor :**
1)MLLER STACH Torsten W.
2)PUNKE Alfred H.
3)GRUBERT Gerd
4)HILGENDORFF Marcus
5)DOERING Helke
6)NEUBAUER Torsten
7)ZHENG Xiaolai
8)WAN Chung Zong
9)XUE Wen Mei
10)BURK Patrick

(57) Abstract :
A diesel oxidation catalyst for the treatment of exhaust gas emissions such as the oxidation of unburned hydrocarbons (HC) and carbon monoxide (CO) and the reduction of nitrogen oxides (NOx) is described. More particularly the present invention is directed to a washcoat composition comprising high silica to alumina zeolite and platinum and palladium such that the zeolite minimizes negative interactions of these platinum group metals with the zeolite.

No. of Pages : 24 No. of Claims : 20

(12) PATENT APPLICATION PUBLICATION
(21) Application No.8698/DELNP/2014 A
(19) INDIA
(22) Date of filing of Application :16/10/2014
(43) Publication Date : 22/05/2015

(54) Title of the invention : A METHOD FOR ANALYZING FLIGHT DATA RECORDED BY AN AIRCRAFT IN ORDER TO CUT THEM UP INTO FLIGHT PHASES

(51) International classification :G05B23/02
(31) Priority Document No :1253082
(32) Priority Date :04/04/2012
(33) Name of priority country :France
(86) International Application No :PCT/EP2013/057102
Filing Date :04/04/2013
(87) International Publication No :WO 2013/150097
(61) Patent of Addition to Application Number :NA
Filing Date :NA
(62) Divisional to Application Number :NA
Filing Date :NA

(71)**Name of Applicant :**
1)SAGEM DEFENSE SECURITE
Address of Applicant :18 20 Quai du Point du Jour F 92100 Boulogne Billancourt France
(72)**Name of Inventor :**
1)GARNIER DE LABAREYRE Edouard
2)LEFEBVRE Victor

(57) Abstract :
The invention relates to a method for analyzing flight data recorded during at least one flight of an aircraft the flight data comprising data relating to characteristic parameters of the flight the method comprising a step for determining a state model of a flight comprising several states each state corresponding to a possible flight phase of the aircraft the state model comprising transitions defining the switchings between these so called states and at least one criterion for initializing the state model said initialization criterion corresponding to an initial state of the state model each transition and each initialization criterion depending on at least one characteristic parameter which may be recorded during the flight of the aircraft.

No. of Pages : 16 No. of Claims : 10

(12) PATENT APPLICATION PUBLICATION
(19) INDIA
(22) Date of filing of Application :22/10/2014
(21) Application No.8879/DELNP/2014 A
(43) Publication Date : 22/05/2015

(54) Title of the invention : NICOTINE FORMULATION

(51) International classification	:A61K9/00,A61K31/465,A61K47/02
(31) Priority Document No	:12161483.8
(32) Priority Date	:27/03/2012
(33) Name of priority country	:EPO
(86) International Application No	:PCT/EP2013/055456
Filing Date	:15/03/2013
(87) International Publication No	:WO 2013/143891
(61) Patent of Addition to Application Number	:NA
Filing Date	:NA
(62) Divisional to Application Number	:NA
Filing Date	:NA

(71)**Name of Applicant :**
1)NICOCCINO AB
Address of Applicant :Lahllsvgen 48 S 183 30 Tby Sweden
(72)**Name of Inventor :**
1)HBINETTE Fredrik

(57) Abstract :
A method of manufacturing a nicotine containing mucoadhesive film by preparing an aqueous solution at a pH of from 9.5 to 13 said solution comprising (i) a nicotine salt (ii) an alkaline pH regulating agent and (iii) a film forming agent comprising an alginate salt of monovalent cation or a mixture of alginate salts of monovalent cations the film forming agent having a mean guluronate (G) content of from 50 to 85% by weight a mean mannuronate (M) content of from 15 to 50% by weight a mean molecular weight of from 30 000 g/mol to 90 000 g/mol and being such that a 10% aqueous solution thereof at a temperature of 20°C has a viscosity of 100 1000 mPas as measured at a shear rate of 20 rpm by use of a Brookfield viscometer with a spindle No. 2; distributing the solution onto a solid surface; and permitting the solution to dry on said surface. A nicotine containing mucoadhesive film.

No. of Pages : 22 No. of Claims : 14

(12) PATENT APPLICATION PUBLICATION
(21) Application No.8681/DELNP/2014 A
(19) INDIA
(22) Date of filing of Application :16/10/2014
(43) Publication Date : 22/05/2015

(54) Title of the invention : SELF INJECTION DEVICE WITH INDICATOR FOR INDICATING PROPER CONNECTION OF COMPONENTS

(51) International classification :A61M5/178
(31) Priority Document No :61/624218
(32) Priority Date :13/04/2012
(33) Name of priority country :U.S.A.
(86) International Application No :PCT/US2013/036405
Filing Date :12/04/2013
(87) International Publication No :WO 2013/155435
(61) Patent of Addition to Application Number :NA
Filing Date :NA
(62) Divisional to Application Number :NA
Filing Date :NA

(71)**Name of Applicant :**
1)BECTON DICKINSON AND COMPANY
Address of Applicant :SCHILDKRAUT Mark J. MC110 1 Becton Drive Franklin Lakes New Jersey 07417 U.S.A.
(72)**Name of Inventor :**
1)SCHNEIDER Jared
2)GUARRAIA Mark
3)BOYAVAL Margaux
4)SHAFER Ryan

(57) Abstract :
A self injection device includes a visual indicator for visually indicating that a main body and a cartridge holder are properly connected together. In one embodiment the visual indicator includes a visual marking on the cartridge holder and a visual marking on the main body such that when the cartridge holder and the main body are properly connected the visual markings are aligned with each other. A self injection device that includes an indicator for a dose window is also disclosed.

No. of Pages : 21 No. of Claims : 21

(12) PATENT APPLICATION PUBLICATION
(19) INDIA
(22) Date of filing of Application :16/10/2014
(21) Application No.8682/DELNP/2014 A
(43) Publication Date : 22/05/2015

(54) Title of the invention : WIND POWER PLANT FREQUENCY CONTROL

(51) International classification :F03D7/02,H02J3/38
(31) Priority Document No :PA 2012 70245
(32) Priority Date :11/05/2012
(33) Name of priority country :Denmark
(86) International Application No :PCT/DK2013/050139
Filing Date :10/05/2013
(87) International Publication No :WO 2013/167142
(61) Patent of Addition to Application Number :NA
Filing Date :NA
(62) Divisional to Application Number :NA
Filing Date :NA

(71)**Name of Applicant :**
1)VESTAS WIND SYSTEMS A/S
Address of Applicant :Hedeager 44 DK 8200 Aarhus N Denmark
(72)**Name of Inventor :**
1)TARNOWSKI Germ¡n Claudio

(57) Abstract :
The present invention relates to a method of operating a wind power plant with at least one wind turbine generator connected to an electrical grid wherein the method comprises the steps of monitoring a frequency parameter and comparing it with a frequency set point as to select a low or high frequency event and determining a power reference to the a least one wind turbine generator based on the frequency parameter In case a high frequency event is detected the power reference is determined as a minimum of a selection of at least a first and a second minimum power reference. And in case a low frequency event is detected the power reference is determined as a maximum of a selection of at least a first and a second maximum power reference dispatching the power reference to the at least one wind turbine generator. The invention also relates to a wind power plant operating according to the method.

No. of Pages : 34 No. of Claims : 9

(12) PATENT APPLICATION PUBLICATION
(19) INDIA
(22) Date of filing of Application :22/10/2014
(21) Application No.8884/DELNP/2014 A
(43) Publication Date : 22/05/2015

(54) Title of the invention : PAPER LABELS MADE THEREFROM AND METHODS OF MAKING PAPER AND LABELS

(51) International classification :B31D1/02,B41M5/40
(31) Priority Document No :61/614771
(32) Priority Date :23/03/2012
(33) Name of priority country :U.S.A.
(86) International Application No :PCT/US2013/033590
Filing Date :22/03/2013
(87) International Publication No :WO 2013/142834
(61) Patent of Addition to Application Number :NA
Filing Date :NA
(62) Divisional to Application Number :NA
Filing Date :NA

(71)**Name of Applicant :**
1)DOCUMOTION RESEARCH INC.
Address of Applicant :2020 S. Eastwood Avenue Santa Ana CA 92705 U.S.A.
(72)**Name of Inventor :**
1)VAN BOOM Joel
2)KRAHL William R.
3)EHRMANN Jeff

(57) Abstract :
Paper is disclosed for use in making repositionable or removable adhesive labels. Figure 2 illustrates a preferred construction of the paper according to the disclosure. Paper (20) is coated with top coat (21) which in turn is coating with a release layer (22). Top coat (21) may be a single or multiple layers such as two layers. The top coat is useful on thermal paper to avoid activation of the thermal layer by handling of the paper or by the release layer. On the opposite side of the paper a primer and/or cleaning layer (or layers) (23) is provided and on that an adhesive layer (24) preferably applied in two or more layers. Adhesive (24) is arranged in a series of discrete areas particles or spots. These are preferably individually isolated and spaced apart. They are preferably symmetrically arranged on either side of the center line (C). Paper (20) is a light weight paper preferably having a weight of 40 to 65 gsm. For POS printers the paper is a thermal paper having a thermally responsive treatment on the surface facing the top coat layer (21). Paper can be utilized that has a suitable top coating from the paper mill or a suitable top coat can be applied in line.

No. of Pages : 57 No. of Claims : 48

(12) PATENT APPLICATION PUBLICATION
(21) Application No.8885/DELNP/2014 A
(19) INDIA
(22) Date of filing of Application :22/10/2014
(43) Publication Date : 22/05/2015

(54) Title of the invention : METHOD FOR COORDINATING FREQUENCY CONTROL CHARACTERISTICS BETWEEN CONVENTIONAL PLANTS AND WIND POWER PLANTS

(51) International classification :H02J3/38
(31) Priority Document No :PA 2012 70247
(32) Priority Date :11/05/2012
(33) Name of priority country :Denmark
(86) International Application No :PCT/DK2013/050137
Filing Date :10/05/2013
(87) International Publication No :WO 2013/167140
(61) Patent of Addition to Application Number :NA
Filing Date :NA
(62) Divisional to Application Number :NA
Filing Date :NA

(71)**Name of Applicant :**
1)VESTAS WIND SYSTEMS A/S
Address of Applicant :Hedeager 44 DK 8200 Aarhus N Denmark
(72)**Name of Inventor :**
1)TARNOWSKI Germ¡n Claudio

(57) Abstract :
The present invention relates to a method for operating an electrical power system comprising at least one wind turbine generator and at least one other power source the method comprises the steps of setting a set of technical requirements and limits for the electrical power system including a total power reserve and at least one of: maximum electrical frequency deviation and allowable wind power electrical frequency fluctuations distributing the total power reserve between the at least one other power source and a total wind power capacity available from the at least one wind turbine generator and calculating in response thereto an amount of power reserve from the at least one wind turbine generator and providing settings for a wind power controller the settings comprising the set of technical requirements and the amount of power reserve from the at least one wind turbine generator. The invention also relates to a power plant operating according to the method.

No. of Pages : 30 No. of Claims : 10

(12) PATENT APPLICATION PUBLICATION
(19) INDIA
(22) Date of filing of Application :17/10/2014
(21) Application No.8748/DELNP/2014 A
(43) Publication Date : 22/05/2015

(54) Title of the invention : LIQUID CRYSTAL DISPLAY DEVICE

(51) International classification :G02F1/13,G02B27/22,G02F1/1335
(31) Priority Document No :2012094960
(32) Priority Date :18/04/2012
(33) Name of priority country :Japan
(86) International Application No :PCT/JP2013/057886
Filing Date :19/03/2013
(87) International Publication No :WO 2013/157342
(61) Patent of Addition to Application Number :NA
Filing Date :NA
(62) Divisional to Application Number :NA
Filing Date :NA

(71)**Name of Applicant :**
1)TOPPAN PRINTING CO. LTD.
Address of Applicant :5 1 Taito 1 chome Taito ku Tokyo 1100016 Japan
(72)**Name of Inventor :**
1)SHIMA Yasuhiro
2)NAKADA Hisashi
3)FUKUYOSHI Kenzo

(57) Abstract :
A liquid crystal display device (1) according to an embodiment is equipped with an array substrate (6) a color filter substrate (5) a liquid crystal layer (7) a backlight (4) and a control unit (12). The array substrate (6) is provided with a plurality of pixel electrodes corresponding to a plurality of pixels arranged in a matrix pattern. The color filter substrate (5) faces the array substrate (6) and is provided with a color filter (16) corresponding to the plurality of pixels. The liquid crystal layer (7) is positioned between the array substrate (6) and the color filter substrate (5). The backlight (4) is positioned on the rear surface of the array substrate (6). The control unit (12) controls the timing of application of voltage to the pixel electrodes and the timing of light emission from the backlight (4). The plurality of pixels are shaped to be a parallelogram that is long in the horizontal direction and have the same color arranged in the horizontal direction and different colors arranged in the vertical direction. Neighboring pixels in the horizontal direction have line symmetry along the center line of the neighboring pixels. The liquid crystal molecules of the neighboring pixels have negative dielectric anisotropy and rotate horizontally to the plane of the substrate or in other words in the direction of line symmetry along the center line when voltage is imparted to the pixel electrode corresponding to the neighboring pixels.

No. of Pages : 79 No. of Claims : 10

(12) PATENT APPLICATION PUBLICATION
(21) Application No.8749/DELNP/2014 A
(19) INDIA
(22) Date of filing of Application :17/10/2014
(43) Publication Date : 22/05/2015

(54) Title of the invention : ISOLATION STRUCTURES FOR DUAL POLARIZED ANTENNAS

(51) International classification :H01Q21/24
(31) Priority Document No :61/615395
(32) Priority Date :26/03/2012
(33) Name of priority country :U.S.A.
(86) International Application No :PCT/IL2013/050295
Filing Date :24/03/2013
(87) International Publication No :WO 2013/144965
(61) Patent of Addition to Application Number :NA
Filing Date :NA
(62) Divisional to Application Number :NA
Filing Date :NA

(71)**Name of Applicant :**
1)GALTRONICS CORPORATION LTD.
Address of Applicant :P.O. Box 1589 14115 Tiberias Israel
(72)**Name of Inventor :**
1)YONA Haim
2)MAMO Shay
3)AZULAY Snir
4)ZIV Yaniv
5)GOLDMAN Ruvim

(57) Abstract :
An antenna including a first dipole having a first polarization the first dipole including a first pair of dipole arms a second dipole having a second polarization the second dipole including a second pair of dipole arms at least one dipole arm of the first pair of dipole arms being located with respect to at least one dipole arm of the second pair of dipole arms so as to form at least one isolation slot therebetween currents along the at least one isolation slot being operative to at least partially cancel mutual coupling between the first dipole and the second dipole and a feed arrangement for feeding the first and second dipoles.

No. of Pages : 23 No. of Claims : 14

(12) PATENT APPLICATION PUBLICATION
(19) INDIA
(22) Date of filing of Application :17/10/2014
(21) Application No.8750/DELNP/2014 A
(43) Publication Date : 22/05/2015

(54) Title of the invention : ENTERPRISE LEVEL DATA ELEMENT REVIEW SYSTEMS AND METHODOLOGIES

(51) International classification :G06F7/74
(31) Priority Document No :NA
(32) Priority Date :NA
(33) Name of priority country :NA
(86) International Application No :PCT/IL2012/000147
Filing Date :04/04/2012
(87) International Publication No :WO 2013/150507
(61) Patent of Addition to Application Number :NA
Filing Date :NA
(62) Divisional to Application Number :NA
Filing Date :NA

(71)**Name of Applicant :**
1)VARONIS SYSTEMS INC.
Address of Applicant :1250 Broadway 31st Floor New York New York 10001 U.S.A.
(72)**Name of Inventor :**
1)FAITELSON Yakov
2)KORKUS Ohad
3)BASS David
4)KAYSAR Yzhar
5)KRETZER KATZIR Ophir

(57) Abstract :
An enterprise level data element review system including a data access event collection subsystem operative to collect data access event notifications relating to ones of a multiplicity of data elements a data element metadata modification subassembly receiving an output from the data access event collection subsystem and providing a script indicating which data elements have had a metadata modification over a given period of time and a data element dancer operative to collect at least one of metadata and access permissions for a plurality of data elements which is substantially less than the multiplicity of data elements and is selected on the basis of the script.

No. of Pages : 15 No. of Claims : 6

(12) PATENT APPLICATION PUBLICATION
(19) INDIA
(22) Date of filing of Application :17/10/2014
(21) Application No.8751/DELNP/2014 A
(43) Publication Date : 22/05/2015

(54) Title of the invention : SCALABLE PROTOCOL FOR LARGE WSNS HAVING LOW DUTY CYCLE END NODES

(51) International classification :H04W84/18
(31) Priority Document No :61/612801
(32) Priority Date :19/03/2012
(33) Name of priority country :U.S.A.
(86) International Application No :PCT/US2013/032986
Filing Date :19/03/2013
(87) International Publication No :WO 2013/142505
(61) Patent of Addition to Application Number :NA
Filing Date :NA
(62) Divisional to Application Number :NA
Filing Date :NA

(71)**Name of Applicant :**
1)ADT SERVICES GMBH
Address of Applicant :Victor Von Bruns strasse 21 CH 8212 Neuhausen Am Rheinfall Switzerland
(72)**Name of Inventor :**
1)RASBAND Paul Brent
2)HALL Stewart E.

(57) Abstract :
A method and system are described for providing a wireless sensor network between a main node and a plurality of nodes the nodes associated with sensors. The method and system define communications channels over which the main node communicates with the nodes based on a channel hopping scheme and define at least one transfer channel that is dedicated to carrying transfer frames that are broadcast by the main node. The method and system configure non acquired nodes that are not acquired to the network to enter a connection session by locating the at least one transfer channel to listen for a transfer message. The transfer message indicates a next communications channel that will become active. The method switches the non acquired nodes to the next communications channel.

No. of Pages : 63 No. of Claims : 23

(12) PATENT APPLICATION PUBLICATION
(19) INDIA
(22) Date of filing of Application :16/10/2014
(21) Application No.8685/DELNP/2014 A
(43) Publication Date : 22/05/2015

(54) Title of the invention : DEVICE USEFUL FOR HYDROGENATION REACTIONS (III)

(51) International classification :B01J10/00,B01J12/00,B01J19/02
(31) Priority Document No :12164528.7
(32) Priority Date :18/04/2012
(33) Name of priority country :EPO
(86) International Application No :PCT/EP2013/057950
Filing Date :17/04/2013
(87) International Publication No :WO 2013/156501
(61) Patent of Addition to Application Number :NA
Filing Date :NA
(62) Divisional to Application Number :NA
Filing Date :NA

(71)**Name of Applicant :**
1)DSM IP ASSETS B.V.
Address of Applicant :Patent Department Het Overloon 1 NL 6411 The Heerlen Netherlands
(72)**Name of Inventor :**
1)BONRATH Werner

(57) Abstract :
The present invention relates to a device for treatment of material transported through the device comprising at least one porous element consisting of specific solid metallic structure which allows cross flow of the material through the porous element and wherein the porous element is coated by a non acidic metal oxide which is impregnated by palladium (Pd).

No. of Pages : 20 No. of Claims : 12

(12) PATENT APPLICATION PUBLICATION
(21) Application No.8686/DELNP/2014 A
(19) INDIA
(22) Date of filing of Application :16/10/2014
(43) Publication Date : 22/05/2015

(54) Title of the invention : CONTACT PIN CONNECTOR COMPRISING A CONTACT PIN AND METHOD FOR MANUFACTURING A CONTACT PIN

(51) International classification :H01R43/16,H01R12/58
(31) Priority Document No :10 2012 102 904.0
(32) Priority Date :03/04/2012
(33) Name of priority country :Germany
(86) International Application No :PCT/EP2013/055932
Filing Date :21/03/2013
(87) International Publication No :WO 2013/149843
(61) Patent of Addition to Application Number :NA
Filing Date :NA
(62) Divisional to Application Number :NA
Filing Date :NA

(71)**Name of Applicant :**
1)TYCO ELECTRONICS AMP GMBH
Address of Applicant :Amperestrasse 12 14 64625 Bensheim Germany
(72)**Name of Inventor :**
1)BECK Karl
2)SCHMIDT Heinrich Romuald

(57) Abstract :
Contact pin connector comprising a contact pin and method for manufacturing a contact pin The invention relates to a contact pin (1) with a first and a second end portion (10,20) and a bending portion (30) located between the end portions wherein the cross section of at least one end portion (10,20) has a preferred bending direction (V1) and at least one bending resistance direction (R1) and wherein the moment of inertia of the cross section of the at least one end portion (10,20) is smaller in the preferred bending direction (V1) than in the bending resistance direction (R1). If such contact pins are bent perpendicular to their longitudinal extension (Z) by a bending force in one direction (F) then the direction of the actual bending (X) deviates from the direction of the bending force (F). In order to eliminate or reduce this deviation it is provided according to the invention that the difference between the moments of inertia in the preferred bending direction (V1) and in the bending resistance direction (R1) in the cross section of the bending portion (30) is smaller than in the at least one end portion (10,20). Furthermore the invention relates to a connector (70) which comprises a contact pin (1) according to the invention as well as a method for manufacturing a contact pin (1) according to the invention.

No. of Pages : 22 No. of Claims : 10

(12) PATENT APPLICATION PUBLICATION
(19) INDIA
(22) Date of filing of Application :16/10/2014
(21) Application No.8687/DELNP/2014 A
(43) Publication Date : 22/05/2015

(54) Title of the invention : IMPROVEMENTS RELATING TO SECURITY METHODS USING MOBILE DEVICES

(51) International classification :H04L29/06,G06Q20/40
(31) Priority Document No :1205401.1
(32) Priority Date :27/03/2012
(33) Name of priority country :U.K.
(86) International Application No :PCT/GB2013/050808
Filing Date :27/03/2013
(87) International Publication No :WO 2013/144625
(61) Patent of Addition to Application Number :NA
Filing Date :NA
(62) Divisional to Application Number :NA
Filing Date :NA

(71)**Name of Applicant :**
1)OMARCO NETWORK SOLUTIONS LIMITED
Address of Applicant :First Floor Millennium House Victoria Road Douglas Isle of Man British Isles IM2 4RW U.K.
(72)**Name of Inventor :**
1)OMAR Ralph Mahmoud

(57) Abstract :
A security device for a portable telecommunications device for controlling each communication from the device to a particular telecommunications address the security device comprising: a data store for storing a personal identifier of at least four alphanumeric characters initially input into the security device by the user during a set up procedure; control means for controlling access to a communications module of the telecommunications device; presenting means for presenting on the portable telecommunications device a variable identifier identifying a predetermined variable associated with the personal identifier for input of a portion of the personal identifier; enabling means for enabling a user to input a portion of the personal identifier determined by the value of the predetermined variable; and comparing means for comparing the input portion with the corresponding portion of the stored personal identifier; wherein the control means is arranged to enable access to the communications module of the telecommunications device for sending a communication to the particular telecommunications address if the comparing means show the input portion matches the corresponding portion of the stored personal identifier.

No. of Pages : 35 No. of Claims : 39

(12) PATENT APPLICATION PUBLICATION
(19) INDIA
(22) Date of filing of Application :16/10/2014
(21) Application No.8688/DELNP/2014 A
(43) Publication Date : 22/05/2015

(54) Title of the invention : CLIMBING LOCKING SYSTEM FOR VERTICAL LADDERS

(51) International classification :E06C1/38,E06C7/18,E06C9/02
(31) Priority Document No :10 2012 204 643.7
(32) Priority Date :22/03/2012
(33) Name of priority country :Germany
(86) International Application No :PCT/EP2013/055850
Filing Date :20/03/2013
(87) International Publication No :WO 2013/139865
(61) Patent of Addition to Application Number :NA
Filing Date :NA
(62) Divisional to Application Number :NA
Filing Date :NA

(71)**Name of Applicant :**
1)LOGAER MASCHINENBAU GMBH
Address of Applicant :Hohe Loga 68 26789 Leer Germany
2)WOBBEN PROPERTIES GMBH
(72)**Name of Inventor :**
1)HERMES Arthur
2)ROTH Simon

(57) Abstract :
The invention relates to a climbing locking system for vertical ladders in particular of a wind turbine. The climbing locking system has at least one vertical ladder segment (20) having a longitudinal direction and at least one open end (20a,20b) for accommodating a catching device which can be moved back and forth in the longitudinal direction as a climbing protection system. The climbing locking system also has at least one climbing locking unit (10) at the at least one open end (20a,20b) of the vertical ladder segment (20). The climbing locking unit (10) is pivotably fastened to the vertical ladder segment (20) and has a locking position for blocking motion of a catching device in a direction of the vertical ladder segment (20) and a passage position for letting motion of the catching device in the longitudinal direction of the vertical ladder segment (20) through in both directions.

No. of Pages : 19 No. of Claims : 8

(12) PATENT APPLICATION PUBLICATION
(19) INDIA
(22) Date of filing of Application :17/10/2014
(21) Application No.8720/DELNP/2014 A
(43) Publication Date : 22/05/2015

(54) Title of the invention : PROCESS FOR COATING METALLIC SURFACES WITH COATING COMPOSITIONS CONTAINING PARTICLES OF A LAYERED DOUBLE HYDROXIDE

(51) International classification :B05D3/10,B05D7/00,C09D5/08
(31) Priority Document No :106256
(32) Priority Date :17/04/2012
(33) Name of priority country :Portugal
(86) International Application No:PCT/EP2013/058032
Filing Date :17/04/2013
(87) International Publication No :WO 2013/156541
(61) Patent of Addition to Application Number :NA
Filing Date :NA
(62) Divisional to Application Number :NA
Filing Date :NA

(71)**Name of Applicant :**
1)CHEMETALL GMBH
Address of Applicant :Trakehner Str. 3 60487 Frankfurt am Main Germany
2)AIRBUS DEFENCE AND SPACE GMBH
3)MANKIEWICZ GEBR. & CO. GMBH & CO. KG
4)UNIVERSIDADE DE AVEIRO
(72)**Name of Inventor :**
1)FERREIRA Mario
2)ZHELUDKEVICH Mikhail
3)TEDIM Jo¡o
4)GANDUBERT Valrie
5)SCHMIDT HANSBERG Thomas
6)HACK Theo
7)NIXON Sonja
8)RAPS Dominik
9)BECKER Diana
10)SCHR–DER Sven

(57) Abstract :
The invention relates to a process of coating a metallic surface with a composition for coating with a pretreatment composition prior to organic c intent for subsequent organic coating with a pretreatmentprimer composition with a primer composition with a paint composition or with an elec coating composition or the thereof generated coating contains particles on the base of at least one layered double hydroxide (LDH) phase showi mHO wherein M M and M are certain divalent trivalent resp. tetravalent cations wherein there is no need that cations M are present or there is n anions A and/or neutral or charged molecules A including assemblies with molecules A are selected from the group consisting of anions of hydroxide fluorides carbonates nitrates sulfates chromate chromite molybdates phosphomolybdates phosphates phosphonates tungstates vanadat compounds anionic surfactants and biomolecules and/or wherein each one coating composition or the thereof generated coating contains their at totally calcined and then rehydrated LDH particles primarily based on a mixture of substances selected from the group consisting of oxides doub LDH phase further anions A and molecules A.

No. of Pages : 85 No. of Claims : 22

(12) PATENT APPLICATION PUBLICATION
(19) INDIA
(22) Date of filing of Application :17/10/2014
(21) Application No.8721/DELNP/2014 A
(43) Publication Date : 22/05/2015

(54) Title of the invention : MODIFIED ANTIBODY REGIONS AND USES THEREOF

(51) International classification :C07K16/28,A61K39/395
(31) Priority Document No :61/639729
(32) Priority Date :27/04/2012
(33) Name of priority country :U.S.A.
(86) International Application No :PCT/US2013/038538
Filing Date :26/04/2013
(87) International Publication No :WO 2013/163630
(61) Patent of Addition to Application Number :NA
Filing Date :NA
(62) Divisional to Application Number :NA
Filing Date :NA

(71)**Name of Applicant :**
1)BIOATLA LLC.
Address of Applicant :11011 Terreyana Road San Diego CA 92121 U.S.A.
(72)**Name of Inventor :**
1)SHORT Jay M.
2)CHANG Hwai Wen
3)FREY Gerhard

(57) Abstract :
The present invention relates to modified Fc regions of antibodies and uses thereof such as in antibodies that contain an Fc region of the present invention.

No. of Pages : 18 No. of Claims : 29

(12) PATENT APPLICATION PUBLICATION
(21) Application No.8723/DELNP/2014 A
(19) INDIA
(22) Date of filing of Application :17/10/2014
(43) Publication Date : 22/05/2015

(54) Title of the invention : STRUCTURES FOR OFFSHORE INSTALLATIONS

(51) International classification :E02B17/00,E02B17/02
(31) Priority Document No :1205192.6
(32) Priority Date :24/03/2012
(33) Name of priority country :U.K.
(86) International Application No :PCT/GB2013/050601
Filing Date :12/03/2013
(87) International Publication No :WO 2013/144558
(61) Patent of Addition to Application Number :NA
Filing Date :NA
(62) Divisional to Application Number :NA
Filing Date :NA

(71)**Name of Applicant :**
1)OWLC HOLDINGS LTD
Address of Applicant :102 Main Street Kirby Muxloe Leicester LE9 2AP U.K.
(72)**Name of Inventor :**
1)BLEASDALE Matthew

(57) Abstract :
A structure (1) for mounting offshore installations (2) such as wind turbines or oil and gas platforms. The structure (1) comprises: a base (4). a top piece (8) and a lattice (6) structure connecting the base (4) to the top piece (8). The sub components of the structure (1) can be pre assembled prior to installation to facilitate ease of construction or they may be transported to a pre determined location and assembled on site.

No. of Pages : 37 No. of Claims : 15

(12) PATENT APPLICATION PUBLICATION
(21) Application No.8724/DELNP/2014 A
(19) INDIA
(22) Date of filing of Application :17/10/2014
(43) Publication Date : 22/05/2015

(54) Title of the invention : METHOD OF MEASURING ATTENTION

(51) International classification :A61B5/16,A61B3/113
(31) Priority Document No :12380018.7
(32) Priority Date :24/04/2012
(33) Name of priority country :EPO
(86) International Application No :PCT/EP2012/076654
Filing Date :21/12/2012
(87) International Publication No :WO 2013/159841
(61) Patent of Addition to Application Number :NA
Filing Date :NA
(62) Divisional to Application Number :NA
Filing Date :NA

(71)**Name of Applicant :**
1)UNIVERSITAT DE BARCELONA
Address of Applicant :Centre de Patents de la UB Baldiri Reixac 4 Torre D E 08028 Barcelona Spain
2)INSTITUCI CATALANA DE RECERCA I ESTUDIS AVAN‡ATS
(72)**Name of Inventor :**
1)SUPER Hans

(57) Abstract :
In a first aspect, the present invention provides a method of measuring attention of a person comprising presenting one or more stimulus aimed at attracting attention of the person; and obtaining positions of the eyes of the person. The method further comprises detecting one or more eye fixations from the obtained positions of the eyes; and measuring the angle of convergence of the eyes over time from the obtained positions of tlie eyes during one or more of the detected eye fixations.

No. of Pages : 40 No. of Claims : 18

(12) PATENT APPLICATION PUBLICATION
(19) INDIA
(22) Date of filing of Application :17/10/2014
(21) Application No.8725/DELNP/2014 A
(43) Publication Date : 22/05/2015

(54) Title of the invention : ILLUMINATED GLAZING FOR VEHICLE

(51) International classification :B60Q3/02,B60Q1/26,B32B17/10
(31) Priority Document No :1253254
(32) Priority Date :10/04/2012
(33) Name of priority country :France
(86) International Application No :PCT/FR2013/050649
Filing Date :26/03/2013
(87) International Publication No :WO 2013/153303
(61) Patent of Addition to Application Number :NA
Filing Date :NA
(62) Divisional to Application Number :NA
Filing Date :NA

(71)**Name of Applicant :**
1)SAINT GOBAIN GLASS FRANCE
Address of Applicant :18 Avenue dAlsace F 92400 Courbevoie France
(72)**Name of Inventor :**
1)VERRAT Ad¨le
2)B„UERLE Pascal

(57) Abstract :
The present invention relates to an illuminated glazing for a vehicle including: a first transparent glass sheet (1) having a first main surface (11) a second main surface (12) and an edge surface; a second transparent glass sheet (2) having a first main surface (21) a second main surface (22) and an edge surface; a laminate insert (3) in adhesive contact with the second main surface (12) of the first sheet (1) and with the first main surface (21) of the second sheet (2); one or more light emitting diode modules (LED modules) (4) which each comprise a plurality of light emitting diodes (LED) (4) and associated electronic components attached to a holder the modules being positioned such that the emitting surface (31) of the LEDs is opposite the edge surface (13) of the first glass sheet; and a light extracting element which is preferably located on one of the main surfaces of the first glass sheet.

No. of Pages : 16 No. of Claims : 11

(12) PATENT APPLICATION PUBLICATION
(19) INDIA
(22) Date of filing of Application :17/10/2014
(21) Application No.8763/DELNP/2014 A
(43) Publication Date : 22/05/2015

(54) Title of the invention : SYSTEM FOR THE ACQUISITION AND ANALYSIS OF MUSCLE ACTIVITY AND OPERATION METHOD THEREOF

(51) International classification :A61B5/0488,A61B5/11,A61B5/053
(31) Priority Document No :MI2012A000494
(32) Priority Date :27/03/2012
(33) Name of priority country :Italy
(86) International Application No :PCT/IB2013/052440
Filing Date :27/03/2013
(87) International Publication No :WO 2013/144866
(61) Patent of Addition to Application Number :NA
Filing Date :NA
(62) Divisional to Application Number :NA
Filing Date :NA

(71)**Name of Applicant :**
1)B10NIX S.R.L.
Address of Applicant :Via DellAmbrosiana 22 I 20123 Milano Italy
(72)**Name of Inventor :**
1)MAURI Alessandro Maria
2)MUTTI Flavio
3)BELLUCO Paolo

(57) Abstract :
A system and corresponding acquisition and analysis method of an individual s muscle activity is disclosed comprising at least an electromyographic acquisition section (A) and a video acquisition section (B) apt to acquire through respective sensors at least first electric signals of an individual s muscle group and second digital video signals of at least said muscle group a computer processor (6) and a user interface (12) through which to provide an output processed by said computer processor (6). The computer processor furthermore comprises an interface communicating with said electromyographic section (A) and said video section (B) a database (11) of deductive rules and processing and analysis means (9) provided with an expert system (10) employing an inferential motor by which said first and second signals of said electromyographic acquisition section (A) and of said video section (B) are correlated applying said deductive rules specific of the methods and tools of artificial intelligence arranged in said database (11); at least one detection sensor of the individual s skin impedence is furthermore provided apt to determine an impedence value to be used as correction parameter of the gain of said sensors of the electromyographic acquisition section (A).

No. of Pages : 42 No. of Claims : 13

(12) PATENT APPLICATION PUBLICATION
(19) INDIA
(22) Date of filing of Application :17/10/2014
(21) Application No.8764/DELNP/2014 A
(43) Publication Date : 22/05/2015

(54) Title of the invention : COMPOSITION AND PROCESS FOR MAKING A POROUS INORGANIC OXIDE COATING

(51) International classification :C09D7/00
(31) Priority Document No :12168873.3
(32) Priority Date :22/05/2012
(33) Name of priority country :EPO
(86) International Application No :PCT/EP2013/060276
Filing Date :17/05/2013
(87) International Publication No :WO 2013/174754
(61) Patent of Addition to Application Number :NA
Filing Date :NA
(62) Divisional to Application Number :NA
Filing Date :NA

(71)**Name of Applicant :**
1)DSM IP ASSETS B.V.
Address of Applicant :Het Overloon 1 NL 6411 TE Heerlen Netherlands
(72)**Name of Inventor :**
1)ARFSTEN Nanning Joerg
2)DIJCK VAN Michael Alphonsus Cornelis Johannes
3)HABETS Roberto Arnoldus Dominicus Maria

(57) Abstract :
The invention relates to acoating composition for making a porous inorganic oxide coating layer on a substrate the composition comprising an inorganic oxide precursor as binder a solvent and a synthetic polyampholyte as pore forming agent. The size of the pores in the coating can be advantageously controlled by the comonomer composition of the polyampholyte and/or by selecting conditions like temperature pH salt concentration and solvent composition when making the composition. The invention also relates to a method of making such coating composition to a process of applying a coating on a substrate using such composition and to such coated substrate showing a specific combination of optical and mechanical properties.

No. of Pages : 35 No. of Claims : 15

(12) PATENT APPLICATION PUBLICATION
(19) INDIA
(22) Date of filing of Application :17/10/2014
(21) Application No.8765/DELNP/2014 A
(43) Publication Date : 22/05/2015

(54) Title of the invention : GLOW PLUG

(51) International classification :F23Q7/00
(31) Priority Document No :2012096331
(32) Priority Date :20/04/2012
(33) Name of priority country :Japan
(86) International Application No :PCT/JP2013/002617
Filing Date :18/04/2013
(87) International Publication No :WO 2013/157266
(61) Patent of Addition to Application Number :NA
Filing Date :NA
(62) Divisional to Application Number :NA
Filing Date :NA

(71)**Name of Applicant :**
1)NGK SPARK PLUG CO. LTD.
Address of Applicant :14 18Takatsuji cho Mizuho ku Nagoya shi Aichi 4678525 Japan
(72)**Name of Inventor :**
1)SUGIYAMA Yumi

(57) Abstract :
Provided is a glow plug with which dissolution loss of a heat generating coil can be reliably prevented. This glow plug (1) is equipped with a heat generating coil (9) within a tube (7). When the length in the axis line (CL1) direction of a prescribed cross sectional region (21) which is one of the cross sectional coil regions of the heat generating coil (9) when viewed in a vertical cross section containing the central axis line (CL2) is a (mm) and the length in the direction orthogonal to the axis line (CL1) is b (mm) the expression a > b is satisfied. Furthermore when the region of an inside contour line (22I) of the prescribed cross sectional region (21) located between the prescribed points (P1) and (P3) has a radius of curvature of R (mm) the curvature of the line is such that R > a/2. Furthermore with respect to the region (21) when a virtual line (VL) extending parallel to the axis line (CL) is drawn at a position such that the area of the region of the region (21) near the inside contour line (22I) is 10% of the entire area of the region (21) and the distance from the inside contour line (22I) to the virtual line (VL) is L (mm) the expression 0.100 < L/b = 0.144 should be satisfied.

No. of Pages : 36 No. of Claims : 3

(12) PATENT APPLICATION PUBLICATION
(19) INDIA
(22) Date of filing of Application :16/10/2014
(21) Application No.8710/DELNP/2014 A
(43) Publication Date : 22/05/2015

(54) Title of the invention : REDUCED NOISE SCREW MACHINES

(51) International classification :F04C18/16,F01C1/16
(31) Priority Document No :1206894.6
(32) Priority Date :19/04/2012
(33) Name of priority country :U.K.
(86) International Application No :PCT/GB2013/050877
Filing Date :03/04/2013
(87) International Publication No :WO 2013/156754
(61) Patent of Addition to Application Number :NA
Filing Date :NA
(62) Divisional to Application Number :NA
Filing Date :NA

(71)**Name of Applicant :**
1)THE CITY UNIVERSITY
Address of Applicant :Northampton Square London EC1V 0HB U.K.
(72)**Name of Inventor :**
1)STOSIC Nikola Rudi

(57) Abstract :
A reduced noise screw expander is described which comprises a main rotor and a gate rotor each having an N profile. The rotors are designed so that the torque on the gate rotor caused by pressure forces is in the same direction as the torque on the gate rotor caused by frictional drag forces. A method of designing a screw machine exhibiting reduced noise is also described. The screw machine has two or more rotors having an N profile and the method involves determining a ratio r/r where r is the main rotor addendum and ris the radius of the rack round side and ensuring that this ratio is greater than 1.1 where the screw machine is to be a screw compressor or less than or equal to 1.1 where the screw machine is to be a screw expander.

No. of Pages : 28 No. of Claims : 7

(12) PATENT APPLICATION PUBLICATION
(19) INDIA
(22) Date of filing of Application :17/10/2014
(21) Application No.8711/DELNP/2014 A
(43) Publication Date : 22/05/2015

(54) Title of the invention : PACKAGING BODY AND PACKAGING BODY PACKAGE

(51) International classification :B65D83/08,B65D77/20
(31) Priority Document No :2012081126
(32) Priority Date :30/03/2012
(33) Name of priority country :Japan
(86) International Application No :PCT/JP2013/058172
Filing Date :21/03/2013
(87) International Publication No :WO 2013/146554
(61) Patent of Addition to Application Number :NA
Filing Date :NA
(62) Divisional to Application Number :NA
Filing Date :NA

(71)**Name of Applicant :**
1)UNI CHARM CORPORATION
Address of Applicant :182 Shimobun Kinsei cho Shikokuchuo shi Ehime 7990111 Japan
(72)**Name of Inventor :**
1)BANDOU Takeshi

(57) Abstract :
Provided is an improved technique relating to the adhesiveness of a lid to a main packaging body. A packaging body (100) is configured having a main body (110) which is made of a sheet member and which comprises an internally formed accommodation space (110H) communicating with an opening (112) and a lid (120) which can open and close the opening. In this packaging body wet sheets (130) accommodated in the accommodation space can be removed through the opening. The main body is formed extending in a first direction. Furthermore the main body has a suspension hole (114) which is for holding the main body (110) and is formed in a region at one end in the first direction. The lid has a base portion (120a) adhered to the main body and an opening and closing portion (120b) configured so as to connect with the base portion (120a) and be peelable relative to the main body (110). The main body comprises a fixing region (113a) where the base portion is fixed a peeling region (113b) where the opening and closing portion is adhered through an adhesive (115b) and an opening forming region (113c) where an opening is arranged surrounded entirely by the fixing region and the peeling region.

No. of Pages : 33 No. of Claims : 13

(12) PATENT APPLICATION PUBLICATION
(21) Application No.8712/DELNP/2014 A
(19) INDIA
(22) Date of filing of Application :17/10/2014
(43) Publication Date : 22/05/2015

(54) Title of the invention : PACKAGING BODY AND PACKAGING BODY PACKAGE

(51) International classification :B65D83/08
(31) Priority Document No :2012081119
(32) Priority Date :30/03/2012
(33) Name of priority country :Japan
(86) International Application No :PCT/JP2013/058171
Filing Date :21/03/2013
(87) International Publication No :WO 2013/146553
(61) Patent of Addition to Application Number :NA
Filing Date :NA
(62) Divisional to Application Number :NA
Filing Date :NA

(71)**Name of Applicant :**
1)UNI CHARM CORPORATION
Address of Applicant :182 Shimobun Kinsei cho Shikokuchuo shi Ehime 7990111 Japan
(72)**Name of Inventor :**
1)BANDOU Takeshi

(57) Abstract :
Provided is an improved technique relating to adhesiveness of a lid to the main packaging body. A packaging body (100) is configured from a main body (110) which comprises a sheet member and is formed with an accommodation space (110H) communicating with an opening (112) formed inside and with a lid (120) which can open and close the opening. In this packaging body wet sheet (130) accommodated in the accommodation space can be removed through the opening. The main body is formed extending in a first direction. Furthermore the main body has a suspension hole (114) for holding the main body (110) formed in a region at one end in the first direction. The lid has a base portion (120a) adhered to the main body and an opening and closing portion (120b) configured so as to connect with the base portion and be peelable relative to the main body. The opening and closing unit is connected to one end portion from the base portion in the first direction. Between at least the opening and the suspension hole (114) in the first direction a reinforcing sheet (113) for reinforcing the main body is formed in the main body.

No. of Pages : 34 No. of Claims : 14

(12) PATENT APPLICATION PUBLICATION
(19) INDIA
(22) Date of filing of Application :16/10/2014
(21) Application No.8713/DELNP/2014 A
(43) Publication Date : 22/05/2015

(54) Title of the invention : METHOD AND DEVICE FOR CONTROLLING AND/OR REGULATING THE ELECTROMECHANICAL ACTUATOR OF A PLANETARY GEAR ASSEMBLY

(51) International classification :H02K41/06,H02K11/00,H02K3/52
(31) Priority Document No :10 2012 007 759.9
(32) Priority Date :20/04/2012
(33) Name of priority country :Germany
(86) International Application No :PCT/EP2013/058140
Filing Date :19/04/2013
(87) International Publication No :WO 2013/156582
(61) Patent of Addition to Application Number :NA
Filing Date :NA
(62) Divisional to Application Number :NA
Filing Date :NA

(71)**Name of Applicant :**
1)JOHNSON CONTROLS GMBH
Address of Applicant :Industriestrae 20 30 51399 Burscheid Germany
2)KAPPEL Andreas
(72)**Name of Inventor :**
1)KIENKE Ingo
2)SCHLER Rolf
3)SCHUHN Christoph

(57) Abstract :
The invention relates to a device for controlling and/or regulating the electromechanical actuator of a planetary gear assembly (1) comprising commutation electronics (14) that are designed as an electronic circuit board and are arranged in a housing (10) directly on a solenoid ring (8) of the electromechanical actuator said housing (10) accommodating the planetary gear assembly (1) and the means for electromagnetically actuating the same. The solenoid ring (8) is formed by a plurality of annular solenoids (7) which can be actuated in turn in the circumferential direction of the solenoid ring (8) by the commutation electronics (14).

No. of Pages : 22 No. of Claims : 10

(12) PATENT APPLICATION PUBLICATION
(19) INDIA
(22) Date of filing of Application :20/10/2014
(21) Application No.8801/DELNP/2014 A
(43) Publication Date : 22/05/2015

(54) Title of the invention : CLOSURE FOR CONTAINERS WITH TAGGANT ELEMENTS

(51) International classification :B65D41/00
(31) Priority Document No :MI2012A000584
(32) Priority Date :11/04/2012
(33) Name of priority country :Italy
(86) International Application No :PCT/IB2013/052840
Filing Date :10/04/2013
(87) International Publication No :WO 2013/153516
(61) Patent of Addition to Application Number :NA
Filing Date :NA
(62) Divisional to Application Number :NA
Filing Date :NA

(71)**Name of Applicant :**
1)GUALA CLOSURES PATENTS B.V.
Address of Applicant :Rapenburgerstraat 175/f NL 1011 VM Amsterdam Netherlands
(72)**Name of Inventor :**
1)VIALE Luca
2)GIOVANNINI Marco

(57) Abstract :
A container closure (1) comprising a first part (2) and a second part (3) overmolded on the first part (2). The closure has a tubular band (4) open at one end (20) and closed at the opposite end by a flat wall (5) transverse to the longitudinal axis of the tubular band. The second part (3) is formed with a volume of plastic material that is smaller than the volume of plastic material that is used to form the first part (2) and comprises taggant elements embedded in its material.

No. of Pages : 13 No. of Claims : 7

(12) PATENT APPLICATION PUBLICATION
(19) INDIA
(22) Date of filing of Application :20/10/2014
(21) Application No.8802/DELNP/2014 A
(43) Publication Date : 22/05/2015

(54) Title of the invention : FRUIT FIBER ARTICLE AND MANUFACTURING THEREOF

(51) International classification :D21C5/00,D21H11/12
(31) Priority Document No :61/635073
(32) Priority Date :18/04/2012
(33) Name of priority country :U.S.A.
(86) International Application No :PCT/US2013/037249
Filing Date :18/04/2013
(87) International Publication No :WO 2013/158931
(61) Patent of Addition to Application Number :NA
Filing Date :NA
(62) Divisional to Application Number :NA
Filing Date :NA

(71)**Name of Applicant :**
1)THE COCA COLA COMPANY
Address of Applicant :One Coca Cola Plaza Atlanta GA 30313 U.S.A.
(72)**Name of Inventor :**
1)MOSS Peter R.
2)BIPPERT Doug A.
3)GARG Rajesh Kumar
4)ROBINSON Kim W.
5)GAINEY Simon
6)CRANDALL Philip G.

(57) Abstract :
An article including a first fiber derived from a first natural source and a second fiber derived from a fruit. A method of manufacturing an article may include combining a first and second fiber to form a fiber mixture where the first and second fibers are obtained from discrete materials and where at least one of the fibers is derived from an edible fruit of a plant. The article may be formed from the fiber mixture.

No. of Pages : 42 No. of Claims : 22

(12) PATENT APPLICATION PUBLICATION
(19) INDIA
(22) Date of filing of Application :20/10/2014
(21) Application No.8803/DELNP/2014 A
(43) Publication Date : 22/05/2015

(54) Title of the invention : ULTRASONIC DEVICE FOR CUTTING AND COAGULATING

(51) International classification :A61B17/12
(31) Priority Document No :61/640227
(32) Priority Date :30/04/2012
(33) Name of priority country :U.S.A.
(86) International Application No :PCT/US2013/038396
Filing Date :26/04/2013
(87) International Publication No :WO 2013/165842
(61) Patent of Addition to Application Number :NA
Filing Date :NA
(62) Divisional to Application Number :NA
Filing Date :NA

(71)**Name of Applicant :**
1)ETHICON ENDO SURGERY INC.
Address of Applicant :4545 Creek Road Cincinnati Ohio 45242 U.S.A.
(72)**Name of Inventor :**
1)STULEN Foster B.
2)SCHULTE John B.
3)ALDRIDGE Jeffrey L.
4)KIRK Jeffery T.
5)BYRUM Randal T.
6)TIMM Richard W.
7)TURNER Douglas J.
8)SARLEY John M.
9)WITT David A.
10)OLSON William A.
11)MOORE Kyle P.

(57) Abstract :
A surgical apparatus comprises a body an ultrasonic transducer a shaft and an end effector. The ultrasonic transducer is operable to convert electrical power into ultrasonic vibrations. The shaft couples the end effector and the body together. The end effector comprises an ultrasonic blade in acoustic communication with the ultrasonic transducer. The ultrasonic blade includes a recess region having a plurality of recesses. The recess region is tapered such that the cross sectional area of the recess region decreases along the length of the recess region. The ultrasonic blade is also curved such that a central longitudinal axis of the ultrasonic blade extends along a curved path. A reference circuit is used to account for voltage drops of unknown values during operation of the surgical apparatus.

No. of Pages : 62 No. of Claims : 20

(12) PATENT APPLICATION PUBLICATION
(19) INDIA
(22) Date of filing of Application :22/10/2014
(21) Application No.8900/DELNP/2014 A
(43) Publication Date : 22/05/2015

(54) Title of the invention : A METHOD TO INCREASE DEWATERING SHEET WET WEB STRENGTH AND WET STRENGTH IN PAPERMAKING

(51) International classification	:D21H17/67,D21H17/63,D21H17/44
(31) Priority Document No	:2012101505343
(32) Priority Date	:15/05/2012
(33) Name of priority country	:China
(86) International Application No	:PCT/US2013/041043
Filing Date	:15/05/2013
(87) International Publication No	:WO 2013/173399
(61) Patent of Addition to Application Number	:NA
Filing Date	:NA
(62) Divisional to Application Number	:NA
Filing Date	:NA

(71)**Name of Applicant :**
1)NALCO COMPANY
Address of Applicant :1601 West Diehl Road Naperville Illinois 60563 U.S.A.
(72)**Name of Inventor :**
1)ZHAO Yulin
2)LI Jun
3)RAO Qing Long
4)CHENG Weiguo

(57) Abstract :
The invention provides a method of improving dewatering efficiency increasing sheet wet web strength increasing sheet wet strength and enhancing filler retention in a papermaking process. The method improves the efficiency of dewatering aid by coating at least some of the filler particles with a material that prevents the filler materials form adhering to dewatering aids. The dewatering aid holds the paper fibers together tightly and is not wasted on the filler particles.

No. of Pages : 21 No. of Claims : 16

(12) PATENT APPLICATION PUBLICATION
(21) Application No.8903/DELNP/2014 A
(19) INDIA
(22) Date of filing of Application :23/10/2014
(43) Publication Date : 22/05/2015

(54) Title of the invention : DIRECT DRIVE FOR A ROTATION MACHINE PARTICULARLY FOR A CONTAINER TREATMENT MACHINE

(51) International classification :H02K26/00,H02K1/18,H02K3/52
(31) Priority Document No :102012204721.2
(32) Priority Date :23/03/2012
(33) Name of priority country :Germany
(86) International Application No :PCT/EP2013/051205
Filing Date :23/01/2013
(87) International Publication No :WO 2013/139502
(61) Patent of Addition to Application Number :NA
Filing Date :NA
(62) Divisional to Application Number :NA
Filing Date :NA

(71)**Name of Applicant :**
1)SCHAEFFLER TECHNOLOGIES GMBH & CO. KG
Address of Applicant :Industriestrae 1 3 91074 Herzogenaurach Germany
(72)**Name of Inventor :**
1)SCHMID G¼nter
2)DITTENH–FER Thomas
3)SCHLER Ralf

(57) Abstract :
The invention relates to a direct drive for a rotation machine particularly for a container treatment machine said drive consisting substantially of a fixed machine part (1) and a machine part (2) rotating around a vertical machine axis wherein the rotating machine part (2) is rotationally connected to the fixed machine part (1) by means of a roller bearing (3) arranged between the two machine parts (1,2) and consisting of an outer bearing ring (4) an inner bearing ring (5) and a plurality of rolling elements rolling between said bearing rings (4 5) and can be driven by a torque motor (7). On the rotating machine part (1) a plurality of magnets (8) is provided surrounding said rotating machine part while on the fixed machine part (1) a stator (12) consisting of a plurality of electric coils (9,10,11) is arranged such that the rotating machine part (2) can be set in a defined rotational motion through an electromagnetic field generated when the stator (12) is energised in cooperation with the magnets (8). According to the invention the stator (12) on the fixed machine part (1) is formed as a full ring of 360° covering without gaps all magnets (8) on the rotating machine part (2) said full ring being composed of a number of stator ring segments (13.1,13.2,13.3,13.4,13.5) adjacent to one another and connected to one another by an electrical series connection and also composed of a number of stop elements (14.1,14.2,14.3,14.4 ,14.5) arranged between the stator ring segments (13.1,13.2,13.3,13.4,13.5) for fixing the stator ring segments (13.1,13.2,13.3,13.4,13.5) in a circumferential and radial direction.

No. of Pages : 21 No. of Claims : 8

(12) PATENT APPLICATION PUBLICATION
(21) Application No.8862/DELNP/2014 A
(19) INDIA
(22) Date of filing of Application :22/10/2014
(43) Publication Date : 22/05/2015

(54) Title of the invention : IMMORTALIZED STEM CELLS AND MEDICINAL COMPOSITION AND MEDICINAL PREPARATION COMPRISING PRODUCT THEREOF AS ACTIVE INGREDIENT

(51) International classification :C12N5/10,A61K9/06,A61K9/08
(31) Priority Document No :2012073594
(32) Priority Date :28/03/2012
(33) Name of priority country :Japan
(86) International Application No :PCT/JP2013/059376
Filing Date :28/03/2013
(87) International Publication No:WO 2013/147082
(61) Patent of Addition to Application Number :NA
Filing Date :NA
(62) Divisional to Application Number :NA
Filing Date :NA

(71)**Name of Applicant :**
1)QUARRYMEN CORPORATION
Address of Applicant :26 10 Ogawa 2 chome Machida shi Tokyo 1940003 Japan
(72)**Name of Inventor :**
1)UEDA Minoru

(57) Abstract :
The purpose of the present invention is to provide immortalized stem cells which produce a growth factor capable of regenerating various kinds of tissues that have been damaged by a variety of causes and a method for producing the aforesaid immortalized stem cells. Another purpose of the present invention is to provide a medicinal composition and a medicinal preparation for restoring damaged tissues and a method for the percutaneous absorption of a culture supernatant. Provided are immortalized stem cells that are obtained by isolating stem cells selected from the group consisting of mammalian mesenchymal cells an embryo at the early stage of the development and somatic cells first culturing the cells to give first stage culture cells transferring four kinds of genes into the first stage culture cells to give transgenic cells and selecting the desired immortalized stem cells from among the transgenic cells using the expression of STRO 1 as an index. Also provided are a medicinal composition and a medicinal preparation for restoring damaged tissues which comprise a culture supernatant of the immortalized stem cells as the active ingredient.

No. of Pages : 60 No. of Claims : 19

(12) PATENT APPLICATION PUBLICATION
(19) INDIA
(22) Date of filing of Application :22/10/2014
(21) Application No.8863/DELNP/2014 A
(43) Publication Date : 22/05/2015

(54) Title of the invention : TURBOCHARGER COMPRISING A FLOATING BUSH BEARING

(51) International classification :F01D25/16,F01D25/18
(31) Priority Document No :10 2012 208 966.7
(32) Priority Date :29/05/2012
(33) Name of priority country :Germany
(86) International Application No :PCT/EP2013/060804
Filing Date :24/05/2013
(87) International Publication No :WO 2013/178557
(61) Patent of Addition to Application Number :NA
Filing Date :NA
(62) Divisional to Application Number :NA
Filing Date :NA

(71)**Name of Applicant :**
1)CONTINENTAL AUTOMOTIVE GMBH
Address of Applicant :Vahrenwalder Strae 9 30165 Hannover Germany
(72)**Name of Inventor :**
1)B–NING Ralf
2)K–MPEL Ralph Maurice
3)SCHMIDT Christian
4)KROTTENTHALER J¼rgen
5)REUTER Stefan

(57) Abstract :
The invention relates to a turbocharger comprising an exhaust gas turbine a fresh air compressor and a bearing seat in which the rotor shaft that is equipped with the turbine and the compressor wheel is rotatably mounted by means of at least one radial bearing. The radial bearing is designed as a floating bush bearing with a hollow cylindrical floating bush body positioned between a bearing seat of the bearing housing and the rotor shaft said body being provided with a defined imbalance in order to counteract an imbalance of the turbo rotor.

No. of Pages : 29 No. of Claims : 12

(12) PATENT APPLICATION PUBLICATION
(21) Application No.8910/DELNP/2014 A
(19) INDIA
(22) Date of filing of Application :24/10/2014
(43) Publication Date : 22/05/2015

(54) Title of the invention : SYSTEMS AND METHODS FOR CREATING AND UTILIZING HIGH VISUAL ASPECT RATIO VIRTUAL ENVIRONMENTS

(51) International classification :G06N3/00,G06T15/40,G09B7/00
(31) Priority Document No :13/456973
(32) Priority Date :26/04/2012
(33) Name of priority country :U.S.A.
(86) International Application No :PCT/US2013/037896
Filing Date :24/04/2013
(87) International Publication No :WO 2013/163247
(61) Patent of Addition to Application Number :NA
Filing Date :NA
(62) Divisional to Application Number :NA
Filing Date :NA

(71)**Name of Applicant :**
1)THE PROCTER & GAMBLE COMPANY
Address of Applicant :One Procter & Gamble Plaza Cincinnati Ohio 45202 U.S.A.
(72)**Name of Inventor :**
1)MACURA Matthew Joseph
2)KONYA Greg Lee
3)CORD Jan
4)WAAS Steve Joseph
5)TAYLOR JR. Michael Wayne

(57) Abstract :
An interactive virtual method for manufacturing plant construction planning design touring and/or management the method comprising: providing a user with a first interactive virtual environment comprising facility information and equipment information; proposing a question; and navigating the environment to obtain answers to the proposed questions; wherein said method is a computer based environment comprising a high visual aspect ratio and wherein said method does not employ computer aided design. Additionally a method for creating a high visual aspect ratio virtual tour comprising: collecting a plurality of first images of areas of low detail and a plurality of second images of areas of high detail; stitching the first images together to create a plurality of first spherical format images and the second images together to create a plurality of second spherical format images; combining the first spherical format images with the second spherical format images to create a high visual aspect ratio virtual tour.

No. of Pages : 24 No. of Claims : 10

(12) PATENT APPLICATION PUBLICATION
(19) INDIA
(22) Date of filing of Application :24/10/2014
(21) Application No.8911/DELNP/2014 A
(43) Publication Date : 22/05/2015

(54) Title of the invention : LAUNDRY DETERGENT COMPOSITION COMPRISING PARTICLES OF PHTHALOCYANINE COMPOUND

(51) International classification :C11D3/00,C11D3/16,C11D3/37
(31) Priority Document No :61/639124
(32) Priority Date :27/04/2012
(33) Name of priority country :U.S.A.
(86) International Application No:PCT/US2013/036922
Filing Date :17/04/2013
(87) International Publication No :WO 2013/162964
(61) Patent of Addition to Application Number :NA
Filing Date :NA
(62) Divisional to Application Number :NA
Filing Date :NA

(71)**Name of Applicant :**
1)THE PROCTER & GAMBLE COMPANY
Address of Applicant :One Procter & Gamble Plaza Cincinnati Ohio 45202 U.S.A.
(72)**Name of Inventor :**
1)STENGER Patrick Christopher
2)MIRACLE Gregory Scot
3)MOON Andrew Philip
4)MCDONNELL Michael
5)BRUHNS Stefan
6)SCHLINGLOFF Gunther
7)MENGE Ullrich
8)BACHMANN Frank
9)LINDENMAIER Andreas

(57) Abstract :
The present invention relates to encapsulated phthalocyanine particles to a process for the preparation thereof compositions comprising such particles and washing agent formulations. The encapsulated phthalocyanine particles comprise a) at least one water soluble phthalocyanine compound and b) gelatine having a bloom strength of 2 to 80 as encapsulating material.

No. of Pages : 70 No. of Claims : 22

(12) PATENT APPLICATION PUBLICATION
(21) Application No.8780/DELNP/2014 A
(19) INDIA
(22) Date of filing of Application :18/10/2014
(43) Publication Date : 22/05/2015

(54) Title of the invention : OUTDOOR UNIT FOR AIR CONDITIONER

(51) International classification :F24F1/68,F24F1/58,F24F1/60
(31) Priority Document No :2012102095
(32) Priority Date :27/04/2012
(33) Name of priority country :Japan
(86) International Application No :PCT/JP2013/062424
Filing Date :26/04/2013
(87) International Publication No :WO 2013/162008
(61) Patent of Addition to Application Number :NA
Filing Date :NA
(62) Divisional to Application Number :NA
Filing Date :NA

(71)**Name of Applicant :**
1)TOSHIBA CARRIER CORPORATION
Address of Applicant :72 34 Horikawa cho Saiwai ku Kawasaki shi Kanagawa 2128585 Japan
(72)**Name of Inventor :**
1)YAMAUCHI Hirofumi
2)SATO Kazuhisa
3)NIWA Hiroyuki
4)OKUMA Takamasa

(57) Abstract :
The purpose of the present invention is to provide an outdoor unit for an air conditioner comprising fundamentally small sized constituent parts whereby a large air conditioning capacity can be achieved by vertically stacking a plurality of small sized constituent parts to correspond to the required air conditioning capacity. The present invention is provided with an outdoor heat exchanger a blower assembly including a blower and a housing for accommodating the outdoor heat exchanger and the blower assembly and the outdoor heat exchanger the blower assembly and the housing are configured so as to be vertically stackable with another outdoor heat exchanger blower assembly and housing.

No. of Pages : 43 No. of Claims : 5

(12) PATENT APPLICATION PUBLICATION
(19) INDIA
(22) Date of filing of Application :19/10/2014
(21) Application No.8781/DELNP/2014 A
(43) Publication Date : 22/05/2015

(54) Title of the invention : BIS POLYMER LIPID PEPTIDE CONJUGATES AND NANOPARTICLES THEREOF

(51) International classification :A61K38/00
(31) Priority Document No :61/622330
(32) Priority Date :10/04/2012
(33) Name of priority country :U.S.A.
(86) International Application No :PCT/US2013/035924
Filing Date :10/04/2013
(87) International Publication No :WO 2013/155152
(61) Patent of Addition to Application Number :NA
Filing Date :NA
(62) Divisional to Application Number :NA
Filing Date :NA

(71)**Name of Applicant :**
1)THE REGENTS OF THE UNIVERSITY OF CALIFORNIA
Address of Applicant :1111 Franklin Street 12 Floor Oakland California 94607 U.S.A.
(72)**Name of Inventor :**
1)XU Ting
2)DONG He
3)SHU Jessica
4)DUBE Nikhil

(57) Abstract :
The present invention provides bis polymer lipid peptide conjugates containing a hydrophobic block and headgroup containing a helical peptide and two polymer blocks. The conjugates can self assemble to form helix bundle subunits which in turn assemble to provide micellar nanocarriers for drug cargos and other agents. Particles containing the conjugates and methods for forming the particles are also disclosed.

No. of Pages : 79 No. of Claims : 31

(12) PATENT APPLICATION PUBLICATION
(19) INDIA
(22) Date of filing of Application :24/10/2014
(21) Application No.8915/DELNP/2014 A
(43) Publication Date : 22/05/2015

(54) Title of the invention : STEEL WALL

(51) International classification :E02D5/04,E02B3/06
(31) Priority Document No :NA
(32) Priority Date :NA
(33) Name of priority country :NA
(86) International Application No :PCT/JP2012/061574
Filing Date :01/05/2012
(87) International Publication No :WO 2013/164885
(61) Patent of Addition to Application Number :NA
Filing Date :NA
(62) Divisional to Application Number :NA
Filing Date :NA

(71)**Name of Applicant :**
1)NIPPON STEEL & SUMITOMO METAL CORPORATION
Address of Applicant :6 1 Marunouchi 2 chome Chiyoda ku Tokyo 1008071 Japan
(72)**Name of Inventor :**
1)NAGAO Naoya
2)TANAKA Hiroyuki

(57) Abstract :
Provided is a steel wall for which construction is simple and for which a wall body made by coupling steel sheet piles capable of readily having high water resistance is reinforced with steel pipes or steel H beams. A wall body (4) is provided by coupling a plurality of hat shaped steel sheet piles (1) by way of joints. Steel pipes (2) for reinforcing the wall body (4) are provided lined up along the lengthwise direction of the wall body (4). Gaps are provided between the wall body (4) and the steel pipes (2). The wall body (4) is formed as a steel sheet piling wall in a corrugated shape that repeats concavity and convexity in the lengthwise direction. The steel pipes (2) are disposed so as to fit partially into the concave portions of the wall body (4). The top of the wall body (4) and steel pipes (2) are coupled. The coupling of the wall body (4) and steel pipes (2) is by way of concrete. Load transfer occurs between the wall body (4) and steel pipes (2). Thus a steel wall (3) can be structured to receive and distribute the acting earth load or water load to the wall body (4) and steel pipes (2).

No. of Pages : 53 No. of Claims : 9

(12) PATENT APPLICATION PUBLICATION
(19) INDIA
(22) Date of filing of Application :24/10/2014
(21) Application No.8917/DELNP/2014 A
(43) Publication Date : 22/05/2015

(54) Title of the invention : SURGICAL GUIDES FROM SCANNED IMPLANT DATA

(51) International classification :A61B17/15,A61B17/17,A61B19/00
(31) Priority Document No :61/642063
(32) Priority Date :03/05/2012
(33) Name of priority country :U.S.A.
(86) International Application No :PCT/US2013/030131
Filing Date :11/03/2013
(87) International Publication No :WO 2013/165558
(61) Patent of Addition to Application Number :NA
Filing Date :NA
(62) Divisional to Application Number :NA
Filing Date :NA

(71)**Name of Applicant :**
1)SYNTHES GMBH
Address of Applicant :Eimattstrasse 3 CH 4436 Oberdorf Switzerland
(72)**Name of Inventor :**
1)DAVISON Andrew Charles
2)MEST John Wayne

(57) Abstract :
A method of making a patient specific surgical guide includes obtaining a virtual model of a fixation member and virtually designing a guide that defines at least one hole that corresponds to a hole of the virtual model of the fixation member.

No. of Pages : 45 No. of Claims : 30

(12) PATENT APPLICATION PUBLICATION
(19) INDIA
(22) Date of filing of Application :24/10/2014
(21) Application No.8918/DELNP/2014 A
(43) Publication Date : 22/05/2015

(54) Title of the invention : ELECTRIC POWER STEERING DEVICE

(51) International classification :B62D5/04,F16C19/06,F16C27/06
(31) Priority Document No :2012099628
(32) Priority Date :25/04/2012
(33) Name of priority country :Japan
(86) International Application No :PCT/JP2013/061986
Filing Date :24/04/2013
(87) International Publication No :WO 2013/161845
(61) Patent of Addition to Application Number :NA
Filing Date :NA
(62) Divisional to Application Number :NA
Filing Date :NA

(71)**Name of Applicant :**
1)JTEKT CORPORATION
Address of Applicant :5 8 Minamisemba 3 chome Chuo ku Osaka shi Osaka 5428502 Japan
(72)**Name of Inventor :**
1)KIKUCHI Arata
2)KUSANO Hirotsugu
3)FUKUMOTO Yasutaka

(57) Abstract :
An electric power steering device is provided with a worm which is connected through a joint to the rotating shaft of an electric motor in a pivotable manner. A first end and a second end of the worm are supported by a first bearing and a second bearing. A pair of elastic members elastically presses the worm to the neutral position in the axial direction. An annular plate spring held by a housing presses the second end to the worm wheel side through the second bearing. A synthetic resin member having a sliding contact surface in contact with the plate spring is integrally provided to the second bearing.

No. of Pages : 60 No. of Claims : 5

(12) PATENT APPLICATION PUBLICATION
(19) INDIA
(22) Date of filing of Application :22/10/2014
(21) Application No.8864/DELNP/2014 A
(43) Publication Date : 22/05/2015

(54) Title of the invention : POWERTRAIN SYSTEMS FOR VEHICLES HAVING FORCED INDUCTION INTAKE SYSTEMS

(51) International classification :F02M37/00,F02D19/06,F02D41/00
(31) Priority Document No :61/640048
(32) Priority Date :30/04/2012
(33) Name of priority country :U.S.A.
(86) International Application No :PCT/US2013/037739
Filing Date :23/04/2013
(87) International Publication No :WO 2013/165746
(61) Patent of Addition to Application Number :NA
Filing Date :NA
(62) Divisional to Application Number :NA
Filing Date :NA

(71)**Name of Applicant :**
1)CORNING INCORPORATED
Address of Applicant :1 Riverfront Plaza Corning New York 14831 U.S.A.
(72)**Name of Inventor :**
1)JOHNSON Paul Oakley
2)PARTRIDGE Randall D.

(57) Abstract :
A powertrain system for a vehicle includes an engine having a plurality of engine cylinders each having an inlet port and an exhaust port an intake manifold in fluid communication with the inlet ports of each of the engine cylinders of the engine and a forced induction system coupled to the engine increasing an intake pressure of air in the intake manifold above ambient pressure. The powertrain system also includes a fuel delivery system supplying fuel to each of the engine cylinders of the engine. The fuel delivery system includes at least one fuel injector per engine cylinder a fuel tank storing fuel having an intermediate RON and an on board separator separating the fuel into a high RON component and a low RON component. The high RON component and the low RON component are delivered to each of the engine cylinders of the engine based on an engine operating parameter.

No. of Pages : 46 No. of Claims : 28

(12) PATENT APPLICATION PUBLICATION
(19) INDIA
(22) Date of filing of Application :22/10/2014
(21) Application No.8865/DELNP/2014 A
(43) Publication Date : 22/05/2015

(54) Title of the invention : METHOD AND SYSTEM FOR THE EMERGENCY START UP OF AN ENERGY GENERATOR SET

(51) International classification :F02C7/272,F02C7/275
(31) Priority Document No :1253938
(32) Priority Date :27/04/2012
(33) Name of priority country :France
(86) International Application No :PCT/FR2013/050863
Filing Date :18/04/2013
(87) International Publication No :WO 2013/160590
(61) Patent of Addition to Application Number :NA
Filing Date :NA
(62) Divisional to Application Number :NA
Filing Date :NA

(71)**Name of Applicant :**
1)TURBOMECA
Address of Applicant :BP 2 F 64510 Bordes France
(72)**Name of Inventor :**
1)FILIPUTTI Hugues
2)GARDE Franck
3)THIRIET Romain

(57) Abstract :
The invention seeks to provide emergency starters that allow responsiveness of this order of magnitude namely within a few seconds without having the disadvantages associated with the mass and size of the backup hydraulic or pneumatic starters mentioned hereinabove. To achieve this the present invention proposes coupling an instantaneous gas thrust of pyrotechnic type with a positive displacement transmission generator in conjunction with automatic coupling to/uncoupling from the set that is to be started. An emergency start up system (10) according to the invention comprises at least one pyrotechnic gas generator (5) connected to an electric initiator (3) itself connected to a computer a positive displacement motor (100) housing straight cut spur gears the pyrotechnic gas generator (5) being coupled to the motor (100) by an inlet (121) in the casing (120). The motor (100) comprises a means of connection capable of moving at one end of the transmission shaft (40b) so as to be able to couple this transmission shaft to a receiving shaft of the set that is to be started via a centrifugal clutch (170).

No. of Pages : 20 No. of Claims : 13

(12) PATENT APPLICATION PUBLICATION
(19) INDIA
(22) Date of filing of Application :22/10/2014
(21) Application No.8866/DELNP/2014 A
(43) Publication Date : 22/05/2015

(54) Title of the invention : GLASS SHEET LAMINATING SYSTEM

(51) International classification :B32B17/10,B26D7/01,B32B37/10
(31) Priority Document No :13/456516
(32) Priority Date :26/04/2012
(33) Name of priority country :U.S.A.
(86) International Application No :PCT/US2013/038447
Filing Date :26/04/2013
(87) International Publication No :WO 2013/163566
(61) Patent of Addition to Application Number :NA
Filing Date :NA
(62) Divisional to Application Number :NA
Filing Date :NA

(71)**Name of Applicant :**
1)CORNING INCORPORATED
Address of Applicant :1 Riverfront Plaza Corning New York 14831 U.S.A.
(72)**Name of Inventor :**
1)NATARAJAN Govindarajan
2)WETMORE Nathaniel David

(57) Abstract :
A contoured glass sheet laminating system may include a glass side vacuum bed a laminate side vacuum bed and a lamination actuator. The glass side vacuum bed may include a vacuum backside and a mold receiving side and may have sufficient permeability to permit a vacuum system to pull a vacuum across a thickness of the glass side vacuum bed between the vacuum backside and the mold receiving side of the glass side vacuum bed. The laminate side vacuum bed may include a vacuum backside and a thin film loading side and may have sufficient permeability to permit a vacuum system to pull a vacuum across a thickness of the laminate side vacuum bed between the vacuum backside and the thin film loading side of the of the laminate side vacuum bed.

No. of Pages : 26 No. of Claims : 25

(12) PATENT APPLICATION PUBLICATION
(19) INDIA
(22) Date of filing of Application :22/10/2014
(21) Application No.8867/DELNP/2014 A
(43) Publication Date : 22/05/2015

(54) Title of the invention : DIHYDRATE OF BENZOTHIOPHENE COMPOUND OR OF A SALT THEREOF AND PROCESS FOR PRODUCING THE SAME

(51) International classification	:C07D409/12,A61K31/4704,A61P25/00
(31) Priority Document No	:61/636920
(32) Priority Date	:23/04/2012
(33) Name of priority country	:U.S.A.
(86) International Application No	:PCT/JP2013/062681
Filing Date	:23/04/2013
(87) International Publication No	:WO 2013/162046
(61) Patent of Addition to Application Number	:NA
Filing Date	:NA
(62) Divisional to Application Number	:NA
Filing Date	:NA

(71)**Name of Applicant :**
1)OTSUKA PHARMACEUTICAL CO. LTD.
Address of Applicant :9 Kanda Tsukasamachi 2 chome Chiyoda ku Tokyo 1018535 Japan
(72)**Name of Inventor :**
1)YAMASHITA Hiroshi
2)SATO Tetsuya
3)MINOWA Takuya
4)HOSHIKA Yusuke
5)TOYOFUKU Hidekazu
6)YAMAGUCHI Tatsuya
7)SOTA Masahiro
8)KAWANO Shuuji
9)NAKAMURA Takayuki
10)ETO Ryohei
11)IKEBUCHI Takuma
12)MORIYAMA Kei
13)ITO Nobuaki

(57) Abstract :
An object of the present invention is to provide a compound that can be used as a more superior therapeutic agent for central nervous system diseases. The present invention provides a dihydrate of 7-[4-(4-benzo[b]thiophen-4-yl-piperazin-l-yl)butoxy]- lH-quinolin-2-one or of a salt thereof, and a process for producing the same.

No. of Pages : 50 No. of Claims : 13

(12) PATENT APPLICATION PUBLICATION
(21) Application No.8770/DELNP/2014 A
(19) INDIA
(22) Date of filing of Application :18/10/2014
(43) Publication Date : 22/05/2015

(54) Title of the invention : TURBOCHARGER WITH THRUST BEARING PROVIDING COMBINED JOURNAL AND THRUST BEARING FUNCTIONS

(51) International classification	:F02B39/00,F02B39/14,F02B37/00
(31) Priority Document No	:61/622107
(32) Priority Date	:10/04/2012
(33) Name of priority country	:U.S.A.
(86) International Application No	:PCT/US2013/034775
Filing Date	:01/04/2013
(87) International Publication No	:WO 2013/154852
(61) Patent of Addition to Application Number	:NA
Filing Date	:NA
(62) Divisional to Application Number	:NA
Filing Date	:NA

(71)**Name of Applicant :**
1)BORGWARNER INC.
Address of Applicant :Patent Department 3850 Hamlin Road Auburn Hills Michigan 48326 U.S.A.
(72)**Name of Inventor :**
1)WARD Daniel N.

(57) Abstract :
Turbochargers typically have separate hydrodynamic journal and thrust bearings. A turbocharger thrust bear ing for a turbocharger is provided that merges the function of a journal bearing into a thrust bearing while maintaining the thrust bearing function to produce a tur bocharger with a reduced axial space envel ope. Such a thrust bearing includes a bore contoured to have a plurality of taper-land pairs distributed circumferentially about the bore. As a result, the axial length of the tur bocharger bearing housing and shaft can be reduced.

No. of Pages : 22 No. of Claims : 15

(12) PATENT APPLICATION PUBLICATION
(19) INDIA
(22) Date of filing of Application :18/10/2014
(21) Application No.8771/DELNP/2014 A
(43) Publication Date : 22/05/2015

(54) Title of the invention : RAZOR HANDLE WITH A ROTATABLE PORTION

(51) International classification :B26B21/22,B26B21/52
(31) Priority Document No :61/640757
(32) Priority Date :01/05/2012
(33) Name of priority country :U.S.A.
(86) International Application No :PCT/US2013/038774
Filing Date :30/04/2013
(87) International Publication No :WO 2013/165954
(61) Patent of Addition to Application Number :NA
Filing Date :NA
(62) Divisional to Application Number :NA
Filing Date :NA

(71)**Name of Applicant :**
1)THE GILLETTE COMPANY
Address of Applicant :World Shaving Headquarters IP/Legal Patent Department 3E One Gillette Park Boston Massachusetts 02127 U.S.A.
(72)**Name of Inventor :**
1)STEVENS Christopher John

(57) Abstract :
A handle for a shaving razor is described in which the handle comprises a grip portion and a neck portion coupled to an end of the grip portion. The neck portion comprises a frame coupled to the end of the grip portion the frame comprising a pin; a pod rotatably coupled to the frame the pod defining an aperture to receive the pin of the frame wherein the pod is configured to rotate about an axis substantially perpendicular to a length of the grip portion; and a spring coupled to the pod wherein the spring generates a return torque when the pod is rotated.

No. of Pages : 14 No. of Claims : 15

(12) PATENT APPLICATION PUBLICATION
(19) INDIA
(22) Date of filing of Application :18/10/2014
(21) Application No.8772/DELNP/2014 A
(43) Publication Date : 22/05/2015

(54) Title of the invention : RETENTION SYSTEM AND METHOD FOR VANE RING ASSEMBLY

(51) International classification :F02B37/12,F02B37/24,F02B39/00
(31) Priority Document No :61/619624
(32) Priority Date :03/04/2012
(33) Name of priority country :U.S.A.
(86) International Application No :PCT/US2013/033423
Filing Date :22/03/2013
(87) International Publication No :WO 2013/151802
(61) Patent of Addition to Application Number :NA
Filing Date :NA
(62) Divisional to Application Number :NA
Filing Date :NA

(71)**Name of Applicant :**
1)BORGWARNER INC.
Address of Applicant :Patent Department 3850 Hamlin Road Auburn Hills Michigan 48326 U.S.A.
(72)**Name of Inventor :**
1)VEMULA Rajendra

(57) Abstract :
A variable geometry turbocharger includes a vane pack having rotatable vanes constrained by a pair of vane rings held together by a plurality of pins. A first end of each pin can be configured with a head. Each pin is received in a pair of aligned apertures in the vane rings such that the head of each pin engages one of the vane rings. A second end of each pin is deformed (e.g. by orbital riveting) such that it engages the other vane ring. Thus a clamp load is applied to the vane rings which can control the parallelism and distance between the vane rings so that the vanes can rotate with a minimum clearance without jamming. Also the pins can maintain vane axle apertures in the vane rings in the correct angular position relative to each other. Such a vane pack configuration can reduce process time and cost.

No. of Pages : 17 No. of Claims : 16

(12) PATENT APPLICATION PUBLICATION
(19) INDIA
(22) Date of filing of Application :18/10/2014
(21) Application No.8773/DELNP/2014 A
(43) Publication Date : 22/05/2015

(54) Title of the invention : APPARATUS AND PROCESS FOR APERTURING AND STRETCHING A WEB

(51) International classification :A61F13/15
(31) Priority Document No :13/455857
(32) Priority Date :25/04/2012
(33) Name of priority country :U.S.A.
(86) International Application No :PCT/US2013/038091
Filing Date :25/04/2013
(87) International Publication No :WO 2013/163360
(61) Patent of Addition to Application Number :NA
Filing Date :NA
(62) Divisional to Application Number :NA
Filing Date :NA

(71)**Name of Applicant :**
1)THE PROCTER & GAMBLE COMPANY
Address of Applicant :One Procter & Gamble Plaza Cincinnati Ohio 45202 U.S.A.
(72)**Name of Inventor :**
1)COE Richard George
2)ORR Jill Marlene
3)GROSS Sarah Beth
4)ISBURGH Robert Karl
5)KOCHER Leroy Joseph
6)MUHS Kevin Gerard
7)MULLANE Timothy Ian

(57) Abstract :
Apparatuses and processes for aperturing and stretching a web are disclosed. In one embodiment the method involves feeding a web into a nip that is formed between at least one pair of intermeshing rolls. The first roll is a raised ridge rotary knife aperturing roll and the second roll is a ring roll; both rolls comprise ridges and grooves. The first roll comprises a plurality of spaced apart teeth extending outwardly from the top surface of the ridges said teeth having tips wherein the top surface of said ridges are disposed between the tips of said teeth and the bottom surface of said grooves. These apparatuses and processes enable a web to be formed which comprises apertures having greater open area than previously achievable with traditional processes and apparatuses.

No. of Pages : 44 No. of Claims : 15

(12) PATENT APPLICATION PUBLICATION
(19) INDIA
(22) Date of filing of Application :18/10/2014
(21) Application No.8775/DELNP/2014 A
(43) Publication Date : 22/05/2015

(54) Title of the invention : DEVICE FOR SUPPLYING A LIQUID ADDITIVE

(51) International classification :F01N3/20
(31) Priority Document No :10 2012 007 691.6
(32) Priority Date :19/04/2012
(33) Name of priority country :Germany
(86) International Application No :PCT/EP2013/056580
Filing Date :27/03/2013
(87) International Publication No :WO 2013/156286
(61) Patent of Addition to Application Number :NA
Filing Date :NA
(62) Divisional to Application Number :NA
Filing Date :NA

(71)**Name of Applicant :**
1)EMITEC GESELLSCHAFT FR EMISSIONSTECHNOLOGIE MBH
Address of Applicant :Hauptstrae 128 53797 Lohmar Germany
(72)**Name of Inventor :**
1)HODGSON Jan
2)SCHEPERS Sven
3)BRCK Rolf

(57) Abstract :
The invention relates to a device (1) for supplying a liquid additive for a motor vehicle (2) comprising a tank (3) for storing the liquid additive and a conveyor unit (4) for conveying said liquid additive out of the tank (3). In addition a sensor (6) is provided which emits and receives waves and is configured to measure the fill level of the liquid additive in said tank (3) by means of a propagation time measurement of the waves along a measurement path (7) to a liquid surface (7) in the tank (3) and back to the sensor (6) the measurement path (7) at least partially running through a measurement channel (9). In addition at least one back flush line (5) opens into the measurement channel (9) such that the measurement channel (9) may be flushed up to the tank (3) in order for said measurement channel (9) to be kept clean and/or be cleaned.

No. of Pages : 25 No. of Claims : 10

(12) PATENT APPLICATION PUBLICATION
(19) INDIA
(22) Date of filing of Application :18/10/2014
(21) Application No.8767/DELNP/2014 A
(43) Publication Date : 22/05/2015

(54) Title of the invention : HUMAN ANTIBODIES TO FEL D1 AND METHODS OF USE THEREOF

(51) International classification :C07K16/18,A61K39/35,A61P37/08
(31) Priority Document No :61/642083
(32) Priority Date :03/05/2012
(33) Name of priority country :U.S.A.
(86) International Application No :PCT/US2013/039192
Filing Date :02/05/2013
(87) International Publication No :WO 2013/166236
(61) Patent of Addition to Application Number :NA
Filing Date :NA
(62) Divisional to Application Number :NA
Filing Date :NA

(71)**Name of Applicant :**
1)REGENERON PHARMACEUTICALS INC.
Address of Applicant :777 Old Saw Mill River Road Tarrytown NY 10591 U.S.A.
(72)**Name of Inventor :**
1)ORENGO Jamie
2)MURPHY Andrew J.

(57) Abstract :
The present invention provides antibodies that bind to the cat allergen Fel d1 compositions comprising the antibodies nucleic acids encoding the antibodies and methods of use of the antibodies. According to certain embodiments of the invention the antibodies are fully human monoclonal antibodies that bind to Fel d1. The antibodies of the invention are useful for binding to the Fel d1 allergen thus preventing binding of the Fel d1 allergen to pre formed IgE on the surface of mast cells or basophils. In doing so the antibodies act to prevent the release of histamine and other inflammatory mediators from mast cells and/or basophils thus ameliorating the untoward response to the cat allergen in sensitized individuals. The antibodies of the invention may also be useful for diagnostic purposes to determine if a patient is allergic to the Fel d1 cat allergen.

No. of Pages : 89 No. of Claims : 53

(12) PATENT APPLICATION PUBLICATION
(19) INDIA
(22) Date of filing of Application :18/10/2014
(21) Application No.8769/DELNP/2014 A
(43) Publication Date : 22/05/2015

(54) Title of the invention : METHOD FOR PRODUCING A PLANT EXTRACT FROM *DESMODIUM* AND ITS EXTRACT

(51) International classification :A61K36/48,A61P1/16,A61P3/10
(31) Priority Document No :2012/0195
(32) Priority Date :20/03/2012
(33) Name of priority country :Belgium
(86) International Application No :PCT/BE2013/000014
Filing Date :20/03/2013
(87) International Publication No :WO 2013/166563
(61) Patent of Addition to Application Number :NA
Filing Date :NA
(62) Divisional to Application Number :NA
Filing Date :NA

(71)**Name of Applicant :**
1)FRANCIS MAES N.V.
Address of Applicant :Albert I Promenade 53 bus 41 B 8400 Oostende Belgium
(72)**Name of Inventor :**
1)MAES Francis
2)PIETERS Luc
3)VLIETINCK Arnold
4)APERS Sandra
5)HERMANS Nina

(57) Abstract :
This invention relates to a method for producing a plant extract quantified on pinitol wherein a plant is selected from the family wherein a fraction is extracted from plant parts wherein a plant extract is derived from said fraction thereof which is remarkable in that a characterised extract is derived from from which a preparation of said plant extract is quantified on pinitol.

No. of Pages : 61 No. of Claims : 46

(12) PATENT APPLICATION PUBLICATION
(19) INDIA
(22) Date of filing of Application :24/10/2014
(21) Application No.8928/DELNP/2014 A
(43) Publication Date : 22/05/2015

(54) Title of the invention : OPERATION MECHANISM AND POWER SWITCH DEVICE PROVIDED WITH SAME

(51) International classification	:H01H33/38,H01H33/42,H01H33/666
(31) Priority Document No	:2012101692
(32) Priority Date	:26/04/2012
(33) Name of priority country	:Japan
(86) International Application No	:PCT/JP2013/002744
Filing Date	:23/04/2013
(87) International Publication No	:WO 2013/161285
(61) Patent of Addition to Application Number	:NA
Filing Date	:NA
(62) Divisional to Application Number	:NA
Filing Date	:NA

(71)**Name of Applicant :**
1)KABUSHIKI KAISHA TOSHIBA
Address of Applicant :1 1 Shibaura 1 chome Minato ku Tokyo 1058001 Japan
(72)**Name of Inventor :**
1)MARUYAMA Yutaka
2)MARUSHIMA Satoshi
3)OHDA Yoshiaki
4)SUZUKI Katsumi

(57) Abstract :
The purpose of the invention is to provide a high speed high response power switch device operation mechanism that has an indispensable function and to provide a power switch device provided with said operation mechanism. The invention is provided with an outer side permanent magnet (31) row an inner side permanent magnet (32) row an inner side pipe (38) an outer side pipe (39) a three phase coil (33) an output ring (34) and a power supply line (33a). The outer side permanent magnet (31) row members adjoin such that the magnetic poles thereof rotate up to 90 degrees at a time. The magnetic poles of the inner side permanent magnet (32) row comprise a magnetization vector radial direction component of the same orientation as the outer side permanent magnet (31) row and a magnetization vector axial direction component of the opposite orientation. The outer side permanent magnet (31) row and the inner side permanent magnet (32) row are fixed facing each other such that the magnetization vector radial direction components thereof have the same orientation. The three phase coil (33) lies between the outer side permanent magnet (31) row and the inner side permanent magnet (32) row with a set clearance.

No. of Pages : 49 No. of Claims : 10

(12) PATENT APPLICATION PUBLICATION
(19) INDIA
(22) Date of filing of Application :24/10/2014
(21) Application No.8930/DELNP/2014 A
(43) Publication Date : 22/05/2015

(54) Title of the invention : COMMUNICATION SYSTEM AND PATH CONTROL METHOD

(51) International classification :H04W40/28,H04L12/701,H04W40/20
(31) Priority Document No :2012102742
(32) Priority Date :27/04/2012
(33) Name of priority country :Japan
(86) International Application No :PCT/JP2013/001861
Filing Date :19/03/2013
(87) International Publication No :WO 2013/161178
(61) Patent of Addition to Application Number :NA
Filing Date :NA
(62) Divisional to Application Number :NA
Filing Date :NA

(71)**Name of Applicant :**
1)NEC CORPORATION
Address of Applicant :7 1 Shiba 5 chome Minato ku Tokyo 1088001 Japan
(72)**Name of Inventor :**
1)TAMURA Toshiyuki
2)SCHMID Stefan

(57) Abstract :
The purpose of the present invention is to provide a communication system and a path control method with which flexible routing can be achieved in a mobile communication network. A communication system according to the present invention is provided with: a data transfer device (11); a gateway (12) which performs prescribed processing with respect to data transferred from the data transfer device (11); and a path control device (13) which in cases when data having a virtual relay device as the destination thereof is transferred to the data transfer device (11) controls the data transfer device (11) such that the destination of the data is set to the gateway (12) and the data is transferred to the gateway (12) without being transferred to the virtual relay device.

No. of Pages : 39 No. of Claims : 13

(12) PATENT APPLICATION PUBLICATION
(19) INDIA
(22) Date of filing of Application :22/10/2014
(21) Application No.8871/DELNP/2014 A
(43) Publication Date : 22/05/2015

(54) Title of the invention : HYDROGEN PRODUCING FUEL CARTRIDGE AND METHODS FOR PRODUCING HYDROGEN

(51) International classification :B01J8/02,B01J7/00,C01B3/06
(31) Priority Document No :61/614868
(32) Priority Date :23/03/2012
(33) Name of priority country :U.S.A.
(86) International Application No :PCT/US2013/030148
Filing Date :11/03/2013
(87) International Publication No :WO 2013/142115
(61) Patent of Addition to Application Number :NA
Filing Date :NA
(62) Divisional to Application Number :NA
Filing Date :NA

(71)**Name of Applicant :**
1)INTELLIGENT ENERGY INC.
Address of Applicant :3450 E. Spring Street Suite 203 Long Beach California 90806 U.S.A.
(72)**Name of Inventor :**
1)HOOD Peter
2)WINAND Henri

(57) Abstract :
In aspects of the disclosure a fuel cartridge wherein the fuel is in a powdered form is admixed with inert materials such as alumina or other ceramics to improve thermal conductivity. Said cartridge having fuel zones heating zones and controllers to selectively heat fuel zones and thereby generate hydrogen via decomposition of fuel is disclosed.

No. of Pages : 34 No. of Claims : 28

(12) PATENT APPLICATION PUBLICATION
(21) Application No.8872/DELNP/2014 A
(19) INDIA
(22) Date of filing of Application :22/10/2014
(43) Publication Date : 22/05/2015

(54) Title of the invention : CARRIER WAVE REPRODUCTION DEVICE AND CARRIER WAVE REPRODUCTION METHOD

(51) International classification :H04L27/38
(31) Priority Document No :2012099167
(32) Priority Date :24/04/2012
(33) Name of priority country :Japan
(86) International Application No :PCT/JP2013/061881
Filing Date :23/04/2013
(87) International Publication No :WO 2013/161801
(61) Patent of Addition to Application Number :NA
Filing Date :NA
(62) Divisional to Application Number :NA
Filing Date :NA

(71)**Name of Applicant :**
1)NEC CORPORATION
Address of Applicant :7 1 Shiba 5 chome Minato ku Tokyo 1088001 Japan
(72)**Name of Inventor :**
1)KAMIYA Norifumi
2)SASAKI Eisaku

(57) Abstract :
The present invention provides a carrier wave reproduction device in which bit error characteristics are improved without decreasing transmission capacity. The carrier wave reproduction device is equipped with an interpolation filter that estimates a phase error for a received symbol on the basis of a pilot symbol included in the received symbol a first phase rotation machine that rotates the received symbol in response to the phase error estimated by the interpolation filter and then outputs the rotated symbol as a first output symbol a phase error compensating unit that compensates for the phase error remaining in the first output symbol and then outputs the result of the compensation as a second output symbol a QAM symbol demapping unit that calculates both a first bit string corresponding to the first output symbol and a second bit string corresponding to the second output signal and an error correction decoder which performs error correction on the bit error in the first bit string and outputs the result. The phase error compensating unit refers to the first bit string after error correction has been performed thereon and then compensates for the phase error remaining in the first output symbol.

No. of Pages : 69 No. of Claims : 12

(12) PATENT APPLICATION PUBLICATION
(19) INDIA
(22) Date of filing of Application :22/10/2014
(21) Application No.8873/DELNP/2014 A
(43) Publication Date : 22/05/2015

(54) Title of the invention : OCCLUSION DETECTION

(51) International classification :A61B5/02,A61M5/142
(31) Priority Document No :61/651860
(32) Priority Date :25/05/2012
(33) Name of priority country :U.S.A.
(86) International Application No :PCT/US2013/042388
Filing Date :23/05/2013
(87) International Publication No :WO 2013/177379
(61) Patent of Addition to Application Number :NA
Filing Date :NA
(62) Divisional to Application Number :NA
Filing Date :NA

(71)**Name of Applicant :**
1)SMITHS MEDICAL ASD INC.
Address of Applicant :160 Weymouth Street Rockland MA 02370 U.S.A.
(72)**Name of Inventor :**
1)WANDER Jacob A.
2)ADAMS Grant A.
3)LACY Christopher A.

(57) Abstract :
A system for occlusion detection could include a syringe pump for a syringe containing a medication wherein the syringe includes a plunger and the syringe pump includes a plunger driver. A bendable element could be integrally formed with the plunger driver and a force sensor could also be integrally formed with the plunger driver. Upon occurrence of an occlusion the plunger would exert a force backwardly against the bendable element thereby deflecting the bendable element into contact with the force sensor to thereby generate a signal indicating the occurrence of the occlusion.

No. of Pages : 18 No. of Claims : 10

(12) PATENT APPLICATION PUBLICATION
(19) INDIA
(22) Date of filing of Application :22/10/2014
(21) Application No.8874/DELNP/2014 A
(43) Publication Date : 22/05/2015

(54) Title of the invention : HYDROGEN PRODUCING FUEL CARTRIDGE

(51) International classification :H01M8/06,C01B3/04
(31) Priority Document No :61/615077
(32) Priority Date :23/03/2012
(33) Name of priority country :U.S.A.
(86) International Application No :PCT/US2013/030263
Filing Date :11/03/2013
(87) International Publication No :WO 2013/142123
(61) Patent of Addition to Application Number :NA
Filing Date :NA
(62) Divisional to Application Number :NA
Filing Date :NA

(71)**Name of Applicant :**
1)INTELLIGENT ENERGY INC.
Address of Applicant :3450 E. Spring Street Suite 203 Long Beach CA 90806 U.S.A.
(72)**Name of Inventor :**
1)ADCOCK Paul
2)CHELLAPPA Anand
3)HOOD Peter

(57) Abstract :
Disclosed herein is a method of producing hydrogen including selectively applying heat to a fuel within a canister thermally insulated and inside a cartridge firing fuel with heating elements to facilitate decomposition and release hydrogen and removing said hydrogen from said cartridge via a fluid communication means.

No. of Pages : 28 No. of Claims : 29

(12) PATENT APPLICATION PUBLICATION
(19) INDIA
(22) Date of filing of Application :22/10/2014
(21) Application No.8875/DELNP/2014 A
(43) Publication Date : 22/05/2015

(54) Title of the invention : TRIGGER OPERATED AEROSOL DISPENSER

(51) International classification :B65D83/16
(31) Priority Document No :61/637734
(32) Priority Date :24/04/2012
(33) Name of priority country :U.S.A.
(86) International Application No :PCT/US2013/037856
Filing Date :23/04/2013
(87) International Publication No :WO 2013/163225
(61) Patent of Addition to Application Number :NA
Filing Date :NA
(62) Divisional to Application Number :NA
Filing Date :NA

(71)**Name of Applicant :**
1)APTAR GROUP INC.
Address of Applicant :1160 North Silver Lake Road Cary IL 60013 U.S.A.
(72)**Name of Inventor :**
1)ERICKSON Gregory A.
2)MARQUARDT Gerald J.
3)CHO Sean
4)BLUMENSTEIN Bernd
5)JASPER Bernhard

(57) Abstract :
A trigger operated aerosol dispenser rs disclosed for dispensing an aerosol product from an aerosol container through an aerosol valve. The trigger operated aerosol dispenser comprises a base secured to the aerosol container with a dispensing head mounted to the base. A nozzle extends through the dispensing head for communicating the aerosol valve with a terminal orifice. A trigger actuator extends front the dispensing head for actuating the aerosol valve upon depression of the trigger actuator to dispense the aerosol product from the terminal orifice. The trigger operated aerosol dispenser may incorporate a lock for inhibiting the trigger from actuating the aerosol valve. In one example the trigger operated aerosol dispenser may be actuated in an alternate manner upon a depression of the dispensing head. Preferably the trigger operated aerosol dispenser is formed from a two piece unit.

No. of Pages : 92 No. of Claims : 14

(12) PATENT APPLICATION PUBLICATION
(19) INDIA
(22) Date of filing of Application :17/10/2014
(21) Application No.8709/DELNP/2014 A
(43) Publication Date : 22/05/2015

(54) Title of the invention : CONTROL VALVE WITH PAIRS OF PETALS WITH DIFFERENT SHAPE AND SIZES AND WITH DIFFERENT CLOSING SPEED FOR SEPARABLE CONNECTION UNITS FOR FLEXIBLE HOSES

(51) International classification :F16K1/16,F16L55/10
(31) Priority Document No :MI2012A000693
(32) Priority Date :26/04/2012
(33) Name of priority country :Italy
(86) International Application No :PCT/IB2013/053225
Filing Date :24/04/2013
(87) International Publication No :WO 2013/160838
(61) Patent of Addition to Application Number :NA
Filing Date :NA
(62) Divisional to Application Number :NA
Filing Date :NA

(71)**Name of Applicant :**
1)MIB ITALIANA S.P.A.
Address of Applicant :Via Garibaldi 6 I 35020 Casalserugo PD Italy
(72)**Name of Inventor :**
1)BORMIOLI Lorenzo

(57) Abstract :
A control valve (5,5) for connection units for flexible hoses is described comprising a plurality of petals (segments or sectors) (6 6 ; 7,7) rotatable between a position of complete opening and a position of complete closing. Said plurality of rotatable petals (6,6 ; 7,7) consist of pairs of petals (6,6 ; 7,7) with different shape and sizes alternately arranged along the circumference of the connection unit. The petals (6,6) of smaller size are controlled so as to close more slowly than those (7,7) of larger size up to reach a contact position of the respective lateral edges. The upstream surface (57) of the petals (6,6) of smaller size is provided with a pair of fins (59) laterally protruding from the above mentioned surface so as to rest on the upstream surface (56) of the petals (7,7) of larger size to oblige the latter to close before the petals (6,6) of smaller size whereas the upstream surface (56) of the petals (7,7) of larger size is provided with a pair of projections (53) which at the end of the closing movement of the petals (6,6 ; 7,7) are inserted in corresponding recesses (60) of the facing surface of the fins (49) for making a precise and stable coupling of the adjacent petals (6,6 ; 7,7) in a tightly closed position.

No. of Pages : 22 No. of Claims : 2

(12) PATENT APPLICATION PUBLICATION
(19) INDIA
(22) Date of filing of Application :24/10/2014
(21) Application No.8933/DELNP/2014 A
(43) Publication Date : 22/05/2015

(54) Title of the invention : POWER SUPPLY CONTROL

(51) International classification :H02J9/00
(31) Priority Document No :NA
(32) Priority Date :NA
(33) Name of priority country :NA
(86) International Application No :PCT/US2012/031848
Filing Date :02/04/2012
(87) International Publication No :WO 2013/151528
(61) Patent of Addition to Application Number :NA
Filing Date :NA
(62) Divisional to Application Number :NA
Filing Date :NA

(71)**Name of Applicant :**
1)SCHNEIDER ELECTRIC IT CORPORATION
Address of Applicant :132 Fairgrounds Road West Kingston RI 02892 U.S.A.
(72)**Name of Inventor :**
1)INGEMI Michael J.

(57) Abstract :
According to a first aspect an uninterruptable power supply is provided. In one example the uninterruptable power supply comprises a controller configured to provide a first current reference signal the first current reference signal having a periodic waveform including a first half period and a second half period each half period having a period end the waveform comprising a substantially rectified sine wave modified such that a value of the rectified sine wave is equal to zero for a predetermined period of time prior to the period end of the second half period a positive current loop control circuit configured to receive the first current reference signal and provide an output signal to the positive boost circuit and a negative current loop control circuit configured to provide an output signal to a negative boost circuit.

No. of Pages : 26 No. of Claims : 20

(12) PATENT APPLICATION PUBLICATION
(21) Application No.8934/DELNP/2014 A
(19) INDIA
(22) Date of filing of Application :24/10/2014
(43) Publication Date : 22/05/2015

(54) Title of the invention : WIRELESS COMMUNICATION NETWORK SYSTEM

(51) International classification :H04W4/04,B61L3/12,B61L25/02
(31) Priority Document No :2012082605
(32) Priority Date :30/03/2012
(33) Name of priority country :Japan
(86) International Application No :PCT/JP2013/057684
Filing Date :18/03/2013
(87) International Publication No :WO 2013/146426
(61) Patent of Addition to Application Number :NA
Filing Date :NA
(62) Divisional to Application Number :NA
Filing Date :NA

(71)**Name of Applicant :**
1)THE NIPPON SIGNAL CO. LTD.
Address of Applicant :5 1 Marunouchi 1 chome Chiyoda ku Tokyo 1006513 Japan
(72)**Name of Inventor :**
1)OGIHARA Hiroshi
2)SHEN Chenlin

(57) Abstract :
This wireless communication network system has at each control zone that a movement path of a mobile body is divided into a plurality of propagation type fixed stations which are spaced apart at predetermined intervals and sequentially mutually perform wireless communication between neighboring stations and one control station which performs control and the like of the wireless communication network. In addition control stations of neighboring control zones are connected to each other with wired cables. Furthermore a redundant configuration is adopted in which the control station and the mobile body communicate via a fixed station which has been connected by wire to the control station and communicate via another fixed station connected by wire to the control station.

No. of Pages : 29 No. of Claims : 7

(12) PATENT APPLICATION PUBLICATION
(21) Application No.8935/DELNP/2014 A
(19) INDIA
(22) Date of filing of Application :24/10/2014
(43) Publication Date : 22/05/2015

(54) Title of the invention : BALANCING CYLINDERS

(51) International classification :B02C4/02,B02C4/32
(31) Priority Document No :13/451909
(32) Priority Date :20/04/2012
(33) Name of priority country :U.S.A.
(86) International Application No :PCT/IB2013/053099
Filing Date :19/04/2013
(87) International Publication No :WO 2013/156968
(61) Patent of Addition to Application Number :NA
Filing Date :NA
(62) Divisional to Application Number :NA
Filing Date :NA

(71)**Name of Applicant :**
1)METSO MINERALS INDUSTRIES INC.
Address of Applicant :20965 Crossroads Circle Waukesha Wisconsin 53186 U.S.A.
(72)**Name of Inventor :**
1)HENDRIX Robert Leh

(57) Abstract :
The present invention relates to a roller crusher (1) having two generally parallel rotatable rollers (7,8) separated by a gap and a feeding arrangement (2) for feeding material to the rollers (7,8). The roller crusher (1) further comprising a base frame (11) and a first and a second roller frame section(9,10) each of the first and second roller frames sections (9,10) being pivotably connected to the base frame (11) and arranged for carrying one of the rollers (7, 8) in bearings arranged at opposed ends of each roller (7,8). The roller crusher (1) also comprises at least one balancing cylinder (17, 18) extending between one of the roller frame sections (9,10) and the base frame (11) such that when the at least one balancing cylinder (17,18) is activated the interconnected roller frame sections (9,10) will pivot relative to the base frame (11) thus adjusting the position of the rollers (7,8) relative to the base frame (11).

No. of Pages : 12 No. of Claims : 12

(12) PATENT APPLICATION PUBLICATION
(19) INDIA
(22) Date of filing of Application :17/10/2014
(21) Application No.8726/DELNP/2014 A
(43) Publication Date : 22/05/2015

(54) Title of the invention : ISOLATION ASSEMBLY FOR INFLOW CONTROL DEVICE

(51) International classification :E21B43/17,E21B43/20
(31) Priority Document No :NA
(32) Priority Date :NA
(33) Name of priority country :NA
(86) International Application No :PCT/US2012/044824
Filing Date :29/06/2012
(87) International Publication No :WO 2014/003775
(61) Patent of Addition to Application Number :NA
Filing Date :NA
(62) Divisional to Application Number :NA
Filing Date :NA

(71)**Name of Applicant :**
1)HALLIBURTON ENERGY SERVICES INC.
Address of Applicant :10200 Bellaire Boulevard Houston Texas 77072 U.S.A.
(72)**Name of Inventor :**
1)HOLDERMAN Luke William
2)HAILEY JR. Travis Thomas
3)SIMONDS Floyd Randolph

(57) Abstract :
Certain aspects and features of the present invention are directed to an isolation assembly that can be disposed in a wellbore through a fluid-producing formation. The isolation assembly can include one joint of a tubing section, at least two inflow control devices, and an isolation element. The joint of the tubing section can include at least two ports. Each inflow control device can be coupled 10 to the tubing section at a respective port. The isolation element can be positioned between the inflow control devices. The isolation element can be configured to fluidly isolate the ports from each other.

No. of Pages : 20 No. of Claims : 20

(12) PATENT APPLICATION PUBLICATION
(19) INDIA
(22) Date of filing of Application :17/10/2014
(21) Application No.8727/DELNP/2014 A
(43) Publication Date : 22/05/2015

(54) Title of the invention : APPARATUS AND METHODS FOR CLEANING TEETH

(51) International classification :A61C17/00
(31) Priority Document No :61/614463
(32) Priority Date :22/03/2012
(33) Name of priority country :U.S.A.
(86) International Application No :PCT/US2013/032635
Filing Date :15/03/2013
(87) International Publication No :WO 2013/142385
(61) Patent of Addition to Application Number :NA
Filing Date :NA
(62) Divisional to Application Number :NA
Filing Date :NA

(71)**Name of Applicant :**
1)SONENDO INC.
Address of Applicant :26051 Merit Circle Suite 102 Laguna Hills CA 92653 U.S.A.
(72)**Name of Inventor :**
1)BERGHEIM Bjarne
2)KHAKPOUR Mehrzad

(57) Abstract :
Various embodiments for cleaning carious regions of a tooth are disclosed herein. For example a dental apparatus can include a fluid platform having a chamber sized and shaped to retain fluid. The chamber can be configured to be coupled to the tooth over the carious region. A pressure wave generator having a distal end may be configured to be positioned in the chamber. The pressure wave generator may be configured to generate pressure waves in the retained fluid sufficient to clean the carious region.

No. of Pages : 74 No. of Claims : 40

(12) PATENT APPLICATION PUBLICATION
(19) INDIA
(22) Date of filing of Application :17/10/2014
(21) Application No.8728/DELNP/2014 A
(43) Publication Date : 22/05/2015

(54) Title of the invention : MANAGEMENT OF BATTERY CAPACITY

(51) International classification :H02J3/28
(31) Priority Document No :2012901435
(32) Priority Date :12/04/2012
(33) Name of priority country :Australia
(86) International Application No :PCT/AU2013/000375
Filing Date :12/04/2013
(87) International Publication No :WO 2013/152397
(61) Patent of Addition to Application Number :NA
Filing Date :NA
(62) Divisional to Application Number :NA
Filing Date :NA

(71)**Name of Applicant :**
1)EAST PENN MANUFACTURING CO. INC.
Address of Applicant :Deka Road Lyon Station PA 19536 U.S.A.
(72)**Name of Inventor :**
1)WOOD John
2)MCKEON Brian

(57) Abstract :
Disclosed is a battery cell system which provides regulation service to the grid as well as the battery being used as part of an uninterruptible power supply (UPS). Part of the capacity of the storage batteries may be used for regulation service while maintaining a reserve of battery capacity to provide the UPS supply if required. An advantage is that the battery installation can be more effectively monitored as it is more regularly being charged and discharged.

No. of Pages : 18 No. of Claims : 11

(12) PATENT APPLICATION PUBLICATION
(21) Application No.8940/DELNP/2014 A
(19) INDIA
(22) Date of filing of Application :25/10/2014
(43) Publication Date : 22/05/2015

(54) Title of the invention : TRANSMISSION BELT

(51) International classification :F16G1/08,C08K3/36,C08K5/20
(31) Priority Document No :2012100332
(32) Priority Date :25/04/2012
(33) Name of priority country :Japan
(86) International Application No :PCT/JP2013/061815
Filing Date :22/04/2013
(87) International Publication No :WO 2013/161777
(61) Patent of Addition to Application Number :NA
Filing Date :NA
(62) Divisional to Application Number :NA
Filing Date :NA

(71)**Name of Applicant :**
1)MITSUBOSHI BELTING LTD.
Address of Applicant :1 21 Hamazoe dori 4 chome Nagata ku Kobe shi Hyogo 6530024 Japan
(72)**Name of Inventor :**
1)NISHIYAMA Takeshi
2)TAKABA Susumu
3)ISHIGURO Hisato

(57) Abstract :
The present invention provides a transmission belt which is provided with: a core wire extending in the lengthwise direction of the belt; an adhesive rubber layer in contact with at least part of the core wire; a back surface rubber layer which is formed on one surface of the adhesive rubber layer; and an inner surface rubber layer which is formed on the other surface of the adhesive rubber layer and engages or makes contact with a pulley. The adhesive rubber layer is formed by a vulcanized rubber composition including a rubber component a fatty acid amide and silica.

No. of Pages : 33 No. of Claims : 7

(12) PATENT APPLICATION PUBLICATION
(21) Application No.8942/DELNP/2014 A
(19) INDIA
(22) Date of filing of Application :25/10/2014
(43) Publication Date : 22/05/2015

(54) Title of the invention : METHODS AND APPARATUS FOR DETECTING AND HANDLING SPLIT BRAIN ISSUES IN A LINK AGGREGATION GROUP

(51) International classification :H04L12/70
(31) Priority Document No :61/647211
(32) Priority Date :15/05/2012
(33) Name of priority country :U.S.A.
(86) International Application No :PCT/IB2012/054444
Filing Date :29/08/2012
(87) International Publication No :WO 2013/171552
(61) Patent of Addition to Application Number :NA
Filing Date :NA
(62) Divisional to Application Number :NA
Filing Date :NA

(71)**Name of Applicant :**
1)TELEFONAKTIEBOLAGET L M ERICSSON (PUBL)
Address of Applicant :Telefonplan 164 83 Stockholm Sweden
(72)**Name of Inventor :**
1)FARKAS J¡nos
2)GER– Bal¡zs Peter
3)SALTSIDIS Panaglotis

(57) Abstract :
Methods and apparatus for operating a virtual node in a LAG that includes a first virtual node and a second virtual node are disclosed. The first virtual node includes at least a first fellow node and a second fellow node. In one exemplary method the first fellow node receives from the second virtual node first control information comprising a system ID and first configuration information associated with the LAG. The first control information is compared with reference configuration information representing previously established expected configuration information associated with the LAG. Based on that comparison and at least one additional criterion a split brain condition may be determined to exist in the LAG. In a complementary fashion a fellow node of the second virtual node may be configured to alter its transmitted configuration information depending on whether it is able to communicate with its fellow node in the second virtual node.

No. of Pages : 35 No. of Claims : 11

(12) PATENT APPLICATION PUBLICATION
(19) INDIA
(22) Date of filing of Application :22/10/2014
(21) Application No.8876/DELNP/2014 A
(43) Publication Date : 22/05/2015

(54) Title of the invention : FORMATION ENVIRONMENT SAMPLING APPARATUS SYSTEMS AND METHODS

(51) International classification :E21B49/10
(31) Priority Document No :NA
(32) Priority Date :NA
(33) Name of priority country :NA
(86) International Application No :PCT/US2012/036791
Filing Date :07/05/2012
(87) International Publication No :WO 2013/169224
(61) Patent of Addition to Application Number :NA
Filing Date :NA
(62) Divisional to Application Number :NA
Filing Date :NA

(71)**Name of Applicant :**
1)HALLIBURTON ENERGY SERVICES INC.
Address of Applicant :10200 Bellaire Blvd. Houston TX 77072 U.S.A.
(72)**Name of Inventor :**
1)DIRKSEN Ronald Johannes
2)PROETT Mark A.
3)WILSON Jim
4)EYUBOGLU Abbas Sami
5)ZHANG Lizheng
6)ZHANG Wei
7)HADIBEIK Abdolhamid

(57) Abstract :
In some embodiments an apparatus and a system as well as a method and an article may operate to advance a sampling and guard probe (100) with a surrounding sealing pad (108) against a borehole wall to adjust the size of the area associated with a fluid flow inlet of the probe where the size of the inlet area (104) is selectably and incrementally variable and to draw fluid into the fluid flow inlet by activating at least one pump (344) coupled to at least one fluid passage (128) in the probe. Additional apparatus systems and methods are disclosed.

No. of Pages : 37 No. of Claims : 20

(12) PATENT APPLICATION PUBLICATION
(19) INDIA
(22) Date of filing of Application :22/10/2014
(21) Application No.8877/DELNP/2014 A
(43) Publication Date : 22/05/2015

(54) Title of the invention : PROCESSES AND CATALYSTS FOR CONVERTING ALKANES TO ALKENES

(51) International classification :C07C5/333,C07C11/02,B01J31/12
(31) Priority Document No :61/648185
(32) Priority Date :17/05/2012
(33) Name of priority country :U.S.A.
(86) International Application No :PCT/US2013/039714
Filing Date :06/05/2013
(87) International Publication No :WO 2013/173104
(61) Patent of Addition to Application Number :NA
Filing Date :NA
(62) Divisional to Application Number :NA
Filing Date :NA

(71)**Name of Applicant :**
1)SAJET DEVELOPMENT LLC
Address of Applicant :1000 Louisiana Suite 4300 Houston TX 77002 U.S.A.
(72)**Name of Inventor :**
1)MILLER Jorge
2)MILLER Luisa Kling
3)STUCKY Barry L.

(57) Abstract :
Generally regenerable encapsulated metal oxide catalysts comprising a ceramic matrix and metal catalysts may be used to convert alkanes to alkenes. The encapsulated metal oxide catalyst may be tailored to produce a variety of alkenes including ethylene butylene and propylene. Further the encapsulated metal oxide catalysts advantageously allow for regeneration and reactant recovery for cost effective and environmentally friendly processes.

No. of Pages : 33 No. of Claims : 20

(12) PATENT APPLICATION PUBLICATION
(19) INDIA
(22) Date of filing of Application :27/10/2014
(21) Application No.8948/DELNP/2014 A
(43) Publication Date : 22/05/2015

(54) Title of the invention : AN OPTICAL SECURITY DEVICE

(51) International classification	:G02F1/19,B42D15/00,G06K19/16
(31) Priority Document No	:2012100573
(32) Priority Date	:10/05/2012
(33) Name of priority country	:Australia
(86) International Application No	:PCT/AU2013/000491
Filing Date	:06/05/2013
(87) International Publication No	:WO 2013/166560
(61) Patent of Addition to Application Number	:NA
Filing Date	:NA
(62) Divisional to Application Number	:NA
Filing Date	:NA

(71)**Name of Applicant :**
1)INNOVIA SECURITY PTY LTD
Address of Applicant :Potter Street Craigieburn Victoria 3064 Australia
(72)**Name of Inventor :**
1)LOK Phei
2)POWER Gary Fairless
3)STEVENS Benjamin

(57) Abstract :
An optical security device is disclosed which includes a diffraction layer having a plurality of diffraction elements and a high refractive index layer wherein the high refractive index layer is applied on the diffraction layer such that selected regions of the diffraction layer have the corresponding diffraction elements partially uncovered by the high refractive index layer and other regions are substantially covered by the high refractive index layer. Accordingly the optical security device has a first security feature associated with the diffraction layer and a second security feature associated with the high refractive index layer. An image is viewable from the regions of the high refractive index layer either covertly by placed an index matched item over the device or overtly through selection of the thickness of the high refractive index layer.

No. of Pages : 17 No. of Claims : 13

(12) PATENT APPLICATION PUBLICATION
(19) INDIA
(22) Date of filing of Application :27/10/2014
(21) Application No.8949/DELNP/2014 A
(43) Publication Date : 22/05/2015

(54) Title of the invention : STAND FOR STORING AND/OR TRANSPORTING GLASS PANELS OF LARGE DIMENSIONS

(51) International classification :B65G49/06,B65D21/02
(31) Priority Document No :2012/0317
(32) Priority Date :11/05/2012
(33) Name of priority country :Belgium
(86) International Application No :PCT/EP2013/001348
Filing Date :07/05/2013
(87) International Publication No :WO 2013/167263
(61) Patent of Addition to Application Number :NA
Filing Date :NA
(62) Divisional to Application Number :NA
Filing Date :NA

(71)**Name of Applicant :**
1)AGC GLASS EUROPE
Address of Applicant :Avenue Jean Monnet 4 B 1348 Louvain La Neuve Belgium
(72)**Name of Inventor :**
1)PICCININNO Michel
2)CAREME Jean Charles
3)CRUYSMANS Harold
4)ZUCCARINI Valeriano

(57) Abstract :
The invention concerns a stand for storing and/or transporting glass panels of large dimensions (2) said stand comprising a horizontal support structure (1) and at least one support frame (3) provided to support said panels. According to the invention such a stand comprises at least one securing means (8) for securing said stand to another stand.

No. of Pages : 19 No. of Claims : 11

(12) PATENT APPLICATION PUBLICATION
(21) Application No.8950/DELNP/2014 A
(19) INDIA
(22) Date of filing of Application :27/10/2014
(43) Publication Date : 22/05/2015

(54) Title of the invention : METHOD AND SYSTEM FOR MORE EFFICIENT BOARDING AND ALIGHTING AT STOPS FOR ROAD BASED VEHICLES OF PUBLIC TRANSPORT TYPE

(51) International classification :G08G1/123,B60G17/00
(31) Priority Document No :12504700
(32) Priority Date :08/05/2012
(33) Name of priority country :Sweden
(86) International Application No :PCT/SE2013/050479
Filing Date :30/04/2013
(87) International Publication No :WO 2013/169182
(61) Patent of Addition to Application Number :NA
Filing Date :NA
(62) Divisional to Application Number :NA
Filing Date :NA

(71)**Name of Applicant :**
1)SCANIA CV AB
Address of Applicant :S 151 87 Sdertlje Sweden
(72)**Name of Inventor :**
1)ASLAN Daniel

(57) Abstract :
The present invention relates to a method for more efficient boarding and alighting at stops for road based vehicles of public transport type comprising the step of activating lowering of the vehicle for said boarding and alighting at stops which step of activating (S1) said lowering takes place before arrival at the respective stop on the basis of the vehicle s location and those of stops along its itinerary so that said lowering is substantially completed for boarding and alighting there. The present invention relates also to a system (I) for more efficient boarding and alighting at stops for road based vehicles of public transport type. The present invention relates also to a motor vehicle (1). The present invention relates also to a computer programme and a computer programme product.

No. of Pages : 28 No. of Claims : 21

(12) PATENT APPLICATION PUBLICATION
(19) INDIA
(22) Date of filing of Application :20/10/2014
(21) Application No.8820/DELNP/2014 A
(43) Publication Date : 22/05/2015

(54) Title of the invention : LIQUID CRYSTAL DISPLAY DEVICE

(51) International classification :G02F1/13357,F21S2/00,G02B5/04
(31) Priority Document No :2012081266
(32) Priority Date :30/03/2012
(33) Name of priority country :Japan
(86) International Application No :PCT/JP2012/071685
Filing Date :28/08/2012
(87) International Publication No :WO 2013/145363
(61) Patent of Addition to Application Number :NA
Filing Date :NA
(62) Divisional to Application Number :NA
Filing Date :NA

(71)**Name of Applicant :**
1)EIZO Corporation
Address of Applicant :153 Shimokashiwano machi Hakusan shi Ishikawa 9248566 Japan
(72)**Name of Inventor :**
1)ITO Hiroshi

(57) Abstract :
A liquid crystal display device provided with a liquid crystal panel (2) a diffuser plate (3) positioned to the rear of the liquid crystal panel (2) a light guide material (4) positioned to the rear of the diffuser plate (3) and a housing for supporting the liquid crystal panel (2) the diffuser plate (3) and the light guide member (4) wherein: the housing has an opening in the rear section thereof; the light guide material (4) is positioned so as to cover the opening; the light guide material (4) is equipped with a prism (7) having an incident surface (8) on which exterior light from above is incident and a first angled surface (9) which is positioned below the incident surface (8) reflects light that is incident from the incident surface (8) and receives external light which is incident from the rear; and it is possible to efficiently use external light.

No. of Pages : 28 No. of Claims : 13

(12) PATENT APPLICATION PUBLICATION
(19) INDIA
(22) Date of filing of Application :20/10/2014
(21) Application No.8822/DELNP/2014 A
(43) Publication Date : 22/05/2015

(54) Title of the invention : PAINT BOOTH EQUIPPED WITH PURIFICATION DEVICE

(51) International classification :B05B15/12,B05B1/14,B05B15/04
(31) Priority Document No :2013121197
(32) Priority Date :07/06/2013
(33) Name of priority country :Japan
(86) International Application No :PCT/JP2014/056277
Filing Date :11/03/2014
(87) International Publication No :WO 2014/196238
(61) Patent of Addition to Application Number :NA
Filing Date :NA
(62) Divisional to Application Number :NA
Filing Date :NA

(71)**Name of Applicant :**
1)BUNRI INCORPORATION
Address of Applicant :708 Takajochohomanbo Miyakonojo shi Miyazaki 8851202 Japan
(72)**Name of Inventor :**
1)TASHIRO Minoru
2)TASHIRO Makoto

(57) Abstract :
A paint booth (10) is provided with a booth main body (12) and a purification device (13). The purification device (13) is provided with a water tank (20) a water rope forming mechanism (22) a sludge removing mechanism (26) an exhaust mechanism (28) a barrier member (45) an inclined plate (50) and an airflow breaking plate (60). A plurality of water ropes (40) are formed by water falling from nozzles (35) of a water case (30). The inclined plate (50) has a water receiving surface (55) inclined at forward and downward angle () oriented toward a water surface (W1) of the water tank (20) from a vertically oriented middle part (H3) of the barrier member (45). The lower end (62) of the airflow breaking plate (60) is in contact with water (W) inside the water tank (20). An airflow inverting part (53) is formed between the lower end (52) of the inclined plate (50) and the water surface (W1). Air oriented downward from an air inflow opening (59) is inverted at the airflow inverting part (53) oriented upward and oriented toward an exhaust chamber (46) by passing through airflow passage parts (65 66).

No. of Pages : 30 No. of Claims : 11

(12) PATENT APPLICATION PUBLICATION
(19) INDIA
(22) Date of filing of Application :20/10/2014
(21) Application No.8823/DELNP/2014 A
(43) Publication Date : 22/05/2015

(54) Title of the invention : FORM HAVING DETACHABLE WRISTBANDS

(51) International classification :A44C5/00,B42D15/00,G09F3/10
(31) Priority Document No :2775274
(32) Priority Date :23/04/2012
(33) Name of priority country :Canada
(86) International Application No :PCT/CA2013/000374
Filing Date :23/04/2013
(87) International Publication No :WO 2013/159186
(61) Patent of Addition to Application Number :NA
Filing Date :NA
(62) Divisional to Application Number :NA
Filing Date :NA

(71)**Name of Applicant :**
1)MEDIREX SYSTEMS INC.
Address of Applicant :499 Queen Street East Toronto Ontario M5A 1C1 Canada
(72)**Name of Inventor :**
1)WENSTEIN Barry B.

(57) Abstract :
A form having a printable nylon taffeta face ply and a liner ply where the face ply is die cut to form one or more blank detachable wristbands having first and second ends. The face ply is adhered to the liner ply by a pressure sensitive adhesive included on at least a portion of its bottom surface and the pressure sensitive adhesive is included on the face ply around the periphery of the one or more wristbands and on a bottom surface of the first and second ends of each of the wristbands. Each of the first and second ends of the wristbands is provided with tamper evident indicia.

No. of Pages : 31 No. of Claims : 11

(12) PATENT APPLICATION PUBLICATION
(19) INDIA
(22) Date of filing of Application :27/10/2014
(21) Application No.8953/DELNP/2014 A
(43) Publication Date : 22/05/2015

(54) Title of the invention : CUSTOMIZED FRICTION FOR BRAKES

(51) International classification :B66B5/16
(31) Priority Document No :NA
(32) Priority Date :NA
(33) Name of priority country :NA
(86) International Application No :PCT/US2012/035743
Filing Date :30/04/2012
(87) International Publication No :WO 2013/165339
(61) Patent of Addition to Application Number :NA
Filing Date :NA
(62) Divisional to Application Number :NA
Filing Date :NA

(71)**Name of Applicant :**
1)OTIS ELEVATOR COMPANY
Address of Applicant :Ten Farm Springs Road Farmington Connecticut 06032 U.S.A.
(72)**Name of Inventor :**
1)EL WARDANY Tahany Ibrahim
2)SCHMIDT Wayde R.
3)LUO Xiaodong
4)COONEY Anthony
5)PITTS John T.

(57) Abstract :
A brake element is provided including a friction material. The friction material includes a polymer based ceramic matrix composite material having a plurality of fibers. The plurality of fibers is arranged at an angle to a braking direction.

No. of Pages : 15 No. of Claims : 17

(12) PATENT APPLICATION PUBLICATION
(19) INDIA
(22) Date of filing of Application :27/10/2014
(21) Application No.8954/DELNP/2014 A
(43) Publication Date : 22/05/2015

(54) Title of the invention : METHOD OF FORMING A SPROCKET

(51) International classification :B23P15/14,B23F15/00,F16H55/12
(31) Priority Document No :13/465248
(32) Priority Date :07/05/2012
(33) Name of priority country :U.S.A.
(86) International Application No :PCT/US2013/036694
Filing Date :16/04/2013
(87) International Publication No :WO 2013/169440
(61) Patent of Addition to Application Number :NA
Filing Date :NA
(62) Divisional to Application Number :NA
Filing Date :NA

(71)**Name of Applicant :**
1)THE GATES CORPORATION
Address of Applicant :(A Delaware Corporation) 1551 Wewatta Street Denver CO 80202 U.S.A.
(72)**Name of Inventor :**
1)CADARETTE Marc
2)WILSON Cathy Peake
3)HODJAT Yahya

(57) Abstract :
A method of forming a sprocket comprising forming a sprocket member having a tooth profile forming grooves in the sprocket member base installing a plurality of sprocket members in a mandrel thereby forming a build applying an elastomer member between adjacent sprocket members wrapping a tensile member about the sprocket members and elastomer members curing the build removing the build from the mandrel and preferably inverting the build and joining the build to a rigid core.

No. of Pages : 21 No. of Claims : 5

(12) PATENT APPLICATION PUBLICATION
(19) INDIA
(22) Date of filing of Application :16/10/2014
(21) Application No.8653/DELNP/2014 A
(43) Publication Date : 22/05/2015

(54) Title of the invention : (2-HETEROARYLAMINO)SUCCINIC ACID DERIVATIVE

(51) International classification :C07D213/75,A61K31/44,A61K31/506
(31) Priority Document No:2012079859
(32) Priority Date :30/03/2012
(33) Name of priority country :Japan
(86) International Application No :PCT/JP2013/059657
Filing Date :29/03/2013
(87) International Publication No :WO 2013/147216
(61) Patent of Addition to Application Number :NA
Filing Date :NA
(62) Divisional to Application Number :NA
Filing Date :NA

(71)**Name of Applicant :**
1)DAIICHI SANKYO COMPANYLIMITED
Address of Applicant :3 5 1Nihonbashi HonchoChuo ku Tokyo 1038426 Japan
(72)**Name of Inventor :**
1)NISHI Tatsuya
2)TANAKA Naoki
3)KITAZAWA Ryoko
4)GOTO Riki
5)ISHIYAMA Takashi

(57) Abstract :
The present invention provides a compound which enhances the production of erythropoietin. The present invention provides a compound represented by formula (1) or the like. (In the formula R represents an aromatic hydrocarbon ring group or an aromatic heterocyclic group; R represents a hydrogen atom an alkyl group or a heterocycloalkyl group; R represents a hydrogen atom or an alkyl group; A represents a hydrogen atom or a hydroxyl group; L represents NHCO or OCH ; and X represents a nitrogen atom or =CH .)

No. of Pages : 94 No. of Claims : 22

(12) PATENT APPLICATION PUBLICATION
(19) INDIA
(22) Date of filing of Application :16/10/2014
(21) Application No.8655/DELNP/2014 A
(43) Publication Date : 22/05/2015

(54) Title of the invention : SLUBBING MACHINE WITH AN ARRANGEMENT FOR DETECTING AND REMOVING YARN FLAWS

(51) International classification	:D01H1/115,B65H63/06,D01H13/16
(31) Priority Document No	:10 2012 102 695.5
(32) Priority Date	:29/03/2012
(33) Name of priority country	:Germany
(86) International Application No	:PCT/EP2013/055335
Filing Date	:15/03/2013
(87) International Publication No	:WO 2013/143874
(61) Patent of Addition to Application Number	:NA
Filing Date	:NA
(62) Divisional to Application Number	:NA
Filing Date	:NA

(71)**Name of Applicant :**
1)MASCHINENFABRIK RIETER AG
Address of Applicant :Klosterstr. 20 CH 8406 Winterthur Switzerland
(72)**Name of Inventor :**
1)STAHLECKER Gerd
2)H„RDI Rudolf

(57) Abstract :
The invention relates to a slubbing machine for producing a rove (1) from a fibre web (2) wherein the slubbing machine has at least one spinning nozzle (3) with an inlet opening (4) for the fibre web (2) wherein the spinning nozzle (3) is assigned at least one air nozzle through which the air can be channelled into the spinning nozzle (3) in order to impart a protective rotation to the fibre web (2) within the spinning nozzle (3) wherein the spinning nozzle (3) has an outlet (5) through which the rove (1) can be drawn out of the spinning nozzle (3) and wherein the slubbing machine comprises at least one receiving device (28) arranged downstream of the spinning nozzle (3) in the transport direction of the rove (1) particularly in the form of a winding device (6) to receive the rove (1) leaving the spinning nozzle (3). The invention proposes that the slubbing machine comprises an arrangement (7) to be passed by the rove (1) for detecting and removing yarn flaws (8) the arrangement (7) being placed between the outlet (5) of the spinning nozzle (3) and the receiving device (28). The invention further discloses a method for producing a rove (1) from a fibre web (2) using a slubbing machine which is characterised in that after leaving a spinning nozzle (3) the rove (1) passes an arrangement (7) for detection and removal of yarn flaws (8) which is placed between the outlet (5) of the spinning nozzle (3) and a receiving device (28) wherein by means of the arrangement (7) yarn flaws (8) are detected upstream of where the rove (1) is received and are removed from the rove (1).

No. of Pages : 27 No. of Claims : 15

(12) PATENT APPLICATION PUBLICATION
(19) INDIA
(22) Date of filing of Application :16/10/2014
(21) Application No.8657/DELNP/2014 A
(43) Publication Date : 22/05/2015

(54) Title of the invention : DYNAMIC DIRECTORY CONTROLS

(51) International classification :G06F12/00
(31) Priority Document No :61/617471
(32) Priority Date :29/03/2012
(33) Name of priority country :U.S.A.
(86) International Application No :PCT/US2013/034339
Filing Date :28/03/2013
(87) International Publication No :WO 2013/148995
(61) Patent of Addition to Application Number :NA
Filing Date :NA
(62) Divisional to Application Number :NA
Filing Date :NA

(71)**Name of Applicant :**
1)DELL SOFTWARE INC.
Address of Applicant :5 Polaris Way Aliso Viejo CA 92656 U.S.A.
(72)**Name of Inventor :**
1)WONG Kam Keung

(57) Abstract :
Systems and methods for extending the capability of a directory processor by for example registering a control are presented. This control can be a non native control or a modification to a native control. Further this disclosure describes example of systems and methods for performing a directory operation which may include one or more controls. At least some of the one or more controls may be non native or dynamic controls. In some cases some of the controls may be native controls.

No. of Pages : 41 No. of Claims : 50

(12) PATENT APPLICATION PUBLICATION
(21) Application No.8658/DELNP/2014 A
(19) INDIA
(22) Date of filing of Application :16/10/2014
(43) Publication Date : 22/05/2015

(54) Title of the invention : A PROCESS FOR OLIGOMERISING A HYDROCARBON TO FORM AT LEAST ONE CO MONOMER PRODUCT

(51) International classification :B01J10/00,B01J19/24,C07C2/08
(31) Priority Document No :2012/03387
(32) Priority Date :09/05/2012
(33) Name of priority country :South Africa
(86) International Application No :PCT/IB2013/053687
Filing Date :08/05/2013
(87) International Publication No :WO 2013/168099
(61) Patent of Addition to Application Number :NA
Filing Date :NA
(62) Divisional to Application Number :NA
Filing Date :NA

(71)**Name of Applicant :**
1)SASOL TECHNOLOGY (PROPRIETARY) LIMITED
Address of Applicant :1 Sturdee Avenue Rosebank 2196 Johannesburg South Africa
(72)**Name of Inventor :**
1)VENTER Denise Louisette
2)TENZA Kenny
3)NONGODLWANA Palesa
4)OVERETT Matthew James
5)BLANN Kevin
6)STARK Nicolaus Ladislaus
7)MCGREGOR Craig
8)WALSH Richard Neil

(57) Abstract :
A process (10) for oligomerising a hydrocarbon to form at least one co monomer product (22) includes feeding a hydrocarbon reactant and organic liquid diluent solvent (32) into an oligomerisation reactor (12). The organic liquid diluent solvent has a normal boiling point below the normal boiling point of 1 hexene but above 20°C or the organic diluent solvent is in the form of a solvent admixture with at least 70% by mass of the solvent admixture constituting organic diluent solvents having a normal boiling point below the normal boiling point of 1 hexene but above 20°C. The oligomerisation reactor (12) holds at least one co monomer product formed in the oligomerisation reactor admixed with a catalyst system (25) introduced into the oligomerisation reactor (12). The catalyst system (25) includes a catalyst dissolved in at least one catalyst solvent. At least a portion of the hydrocarbon reactant is oligomerised in the reactor (12) to form co monomer product and polymeric by product as part of a liquid product which is withdrawn. When there is only one catalyst solvent and only one organic liquid diluent solvent the catalyst solvent and the organic liquid diluent solvent are not the same solvent. When there is more than one catalyst solvent or more than one organic liquid diluent solvent at least one of the catalyst solvents is not also used as organic liquid diluent solvent or at least one of the organic liquid diluent solvents is not also used at the catalyst solvent. The mass ratio of all organic liquid diluent solvent introduced into the oligomerisation reactor to all catalyst solvent introduced into the oligomerisation reactor over a selected time period is between 15:1 and 4500:1.

No. of Pages : 70 No. of Claims : 15

(12) PATENT APPLICATION PUBLICATION
(19) INDIA
(22) Date of filing of Application :22/10/2014
(21) Application No.8868/DELNP/2014 A
(43) Publication Date : 22/05/2015

(54) Title of the invention : PRESSURE SENSING TOUCH SYSTEM UTILIZING TOTAL INTERNAL REFLECTION

(51) International classification :G06F3/042,G06F3/041
(31) Priority Document No :61/640605
(32) Priority Date :30/04/2012
(33) Name of priority country :U.S.A.
(86) International Application No :PCT/US2013/037762
Filing Date :23/04/2013
(87) International Publication No :WO 2013/165749
(61) Patent of Addition to Application Number :NA
Filing Date :NA
(62) Divisional to Application Number :NA
Filing Date :NA

(71)**Name of Applicant :**
1)CORNING INCORPORATED
Address of Applicant :1 Riverfront Plaza Corning New York 14831 U.S.A.
(72)**Name of Inventor :**
1)BAHARAV Izhak
2)KING Jeffrey Stapleton

(57) Abstract :
A pressure sensing touch system that utilizes total internal reflection of light is disclosed. The touch system includes a transparent sheet having a surface. At least one light source and at least one detector are operably arranged relative to the transparent sheet respective to transmit light through the sheet and to detect the transmitted light. A touch event at the top surface of the transparent sheet causes light to scatter from the transparent sheet thereby changing the amount of light received at the detector. Since the amount of scattered light generated at the touch event location is a function of the applied pressure at the touch event the change in the detector signal is used to determine the relative amount of applied pressure. Embodiments that include multiple waveguides and channel waveguides as well as forcesensing devices are also disclosed.

No. of Pages : 56 No. of Claims : 22

(12) PATENT APPLICATION PUBLICATION
(19) INDIA
(22) Date of filing of Application :22/10/2014
(21) Application No.8869/DELNP/2014 A
(43) Publication Date : 22/05/2015

(54) Title of the invention : AROMATIC DISPERSANT COMPOSITION

(51) International classification :C08G65/02,C08G65/333
(31) Priority Document No :61/641353
(32) Priority Date :02/05/2012
(33) Name of priority country :U.S.A.
(86) International Application No :PCT/US2013/037928
Filing Date :24/04/2013
(87) International Publication No :WO 2013/165770
(61) Patent of Addition to Application Number :NA
Filing Date :NA
(62) Divisional to Application Number :NA
Filing Date :NA

(71)**Name of Applicant :**
1)LUBRIZOL ADVANCED MATERIALS INC.
Address of Applicant :9911 Brecksville Road Cleveland OH 44141 3247 U.S.A.
(72)**Name of Inventor :**
1)SHOOTER Andrew J.
2)THETFORD Dean
3)RICHARDS Stuart N.

(57) Abstract :
The present invention relates to a polymer and a composition containing a particulate solid an aqueous medium and a polymer chain having at least one fused aromatic imide pendant group. The invention further provides compositions for millbases dispersions coatings and inks.

No. of Pages : 59 No. of Claims : 21

(12) PATENT APPLICATION PUBLICATION
(21) Application No.8960/DELNP/2014 A
(19) INDIA
(22) Date of filing of Application :27/10/2014
(43) Publication Date : 22/05/2015

(54) Title of the invention : METHOD FOR EXPRESSION OF HETEROLOGOUS PROTEINS USING A RECOMBINANT NEGATIVE STRAND RNA VIRUS VECTOR

(51) International classification :C12N15/86,C12N5/071
(31) Priority Document No :12004148.8
(32) Priority Date :30/05/2012
(33) Name of priority country :EPO
(86) International Application No :PCT/EP2013/001547
Filing Date :24/05/2013
(87) International Publication No :WO 2013/178344
(61) Patent of Addition to Application Number :NA
Filing Date :NA
(62) Divisional to Application Number :NA
Filing Date :NA

(71)**Name of Applicant :**
1)AMVAC AG
Address of Applicant :Metallstr. 4 CH 6300 Zug Switzerland
(72)**Name of Inventor :**
1)WIEGAND Marian

(57) Abstract :
The present invention provides a method of expressing at least one heterologous nucleic acid sequence in a cell the method comprising introducing at least one heterologous nucleic acid sequence into a cell by infecting said cell with a recombinant negative strand RNA virus vector comprising said at least one heterologous nucleic acid sequence wherein the recombinant negative strand RNA virus vector includes a viral genome coding for a mutated P protein which leads to a loss of the viral genome replication ability without a loss of the viral transcription ability and wherein said at least one heterologous nucleic acid sequence encodes a cellular reprogramming or programming factor or a therapeutic protein. In addition the present invention provides a cell or a population of cells prepared in vitro by said method as well as a pharmaceutical composition comprising said cell or population of cells.

No. of Pages : 47 No. of Claims : 15

(12) PATENT APPLICATION PUBLICATION
(21) Application No.8962/DELNP/2014 A
(19) INDIA
(22) Date of filing of Application :27/10/2014
(43) Publication Date : 22/05/2015

(54) Title of the invention : METHOD AND APPARATUS FOR HYBRID AUTOMATIC REPEAT REQUEST SIGNALING FOR CARRIER AGGREGATION

(51) International classification :H04L1/16
(31) Priority Document No :61/645476
(32) Priority Date :10/05/2012
(33) Name of priority country :U.S.A.
(86) International Application No :PCT/SE2013/000067
Filing Date :08/05/2013
(87) International Publication No :WO 2013/169167
(61) Patent of Addition to Application Number :NA
Filing Date :NA
(62) Divisional to Application Number :NA
Filing Date :NA

(71)**Name of Applicant :**
1)TELEFONAKTIEBOLAGET L M ERICSSON (PUBL)
Address of Applicant :S 164 83 Stockholm Sweden
(72)**Name of Inventor :**
1)LARSSON Daniel
2)CHENG Jung Fu
3)ERIKSSON Erik
4)FRENNE Mattlas

(57) Abstract :
In one aspect the teachings herein provide a system and method for reusing the PUCCH format 3 to address the new HARQ ACK feedback cases encountered in Rel 11 where different UL/DL configurations are involved in the CA configuration of a UE such as Rel 11 interband TDD CA with different UL/DL configurations on different bands. The various embodiments illustrated by way of example in this disclosure enable reliable and efficient HARQ ACK feedback for Rel 11 TDD CA without a substantial increase in specification and implementation complexity.

No. of Pages : 29 No. of Claims : 13

(12) PATENT APPLICATION PUBLICATION
(19) INDIA
(22) Date of filing of Application :27/10/2014
(21) Application No.8964/DELNP/2014 A
(43) Publication Date : 22/05/2015

(54) Title of the invention : METHODS FOR INDUCTION OF ANTIGEN SPECIFIC REGULATORY T CELLS

(51) International classification :C12N5/0783,C12N5/0784,A61K35/12
(31) Priority Document No :61/640537
(32) Priority Date :30/04/2012
(33) Name of priority country :U.S.A.
(86) International Application No :PCT/EP2013/058835
Filing Date :29/04/2013
(87) International Publication No :WO 2013/164289
(61) Patent of Addition to Application Number :NA
Filing Date :NA
(62) Divisional to Application Number :NA
Filing Date :NA

(71)**Name of Applicant :**
1)IMCYSE SA
Address of Applicant :GIGA B34 Avenue de IH´pital 1 4000 Li¨ge Belgium
2)KATHOLIEKE UNIVERSITEIT LEUVEN
(72)**Name of Inventor :**
1)SAINT REMY Jean Marie

(57) Abstract :
The present invention relates to methods to elicit immature antigen presenting cells loaded with apoptotic cells or apoptotic bodies. The present invention also relates to methods of obtaining antigen specific regulatory T cells in vitro or in vivo. Cells loaded with apoptotic bodies/cells and regulatory T cells are obtainable by inducing apoptosis of antigen presenting cells by cytolytic CD4+ T cells. The cells are used for suppressing or preventing diseases such as autoimmune diseases graft rejection and allergic diseases and medicaments related thereto. Further disclosed are the use of antigen specific regulatory T cells for suppressing or preventing diseases such as autoimmune diseases graft rejection and allergic diseases and medicaments related thereto. Further disclosed are populations of antigen specific regulatory T cells obtained by said method.

No. of Pages : 30 No. of Claims : 19

(12) PATENT APPLICATION PUBLICATION
(19) INDIA
(22) Date of filing of Application :20/10/2014
(21) Application No.8819/DELNP/2014 A
(43) Publication Date : 22/05/2015

(54) Title of the invention : PACKING MATERIAL

(51) International classification	:B65D19/38,B65D77/26,B65D81/07
(31) Priority Document No	:2012001750 U
(32) Priority Date	:28/03/2012
(33) Name of priority country	:Japan
(86) International Application No	:PCT/JP2013/054790
Filing Date	:25/02/2013
(87) International Publication No	:WO 2013/146001
(61) Patent of Addition to Application Number	:NA
Filing Date	:NA
(62) Divisional to Application Number	:NA
Filing Date	:NA

(71)**Name of Applicant :**
1)SEKISUI PLASTICS CO. LTD.
Address of Applicant :4 4 Nishitenma 2 chome Kita ku Osaka shi Osaka 5308565 Japan
(72)**Name of Inventor :**
1)MIURA Osamu
2)TOGAMI Takehiro
3)FUKUTA Atsushi

(57) Abstract :
Provided is a packing material that is capable of restricting the vertical movement of an item to be packed without a packing member pressing from above on the item to be packed. The packing material is used in conjunction with a bottom section packing member (10) for packing the bottom section (Pb) of the item to be packed (P). The packing material (1) is provided with a pair of long lateral section packing members (20) for contacting the interior of a container (30) with both ends thereof and positioned so as to face one another in the horizontal direction along lateral surfaces (Ps) of the item to be packed (P). Each lateral section packing member (20) is formed in a manner such that the length thereof is longer than a contact distance (L2) which is the distance between contact by both ends thereof to the inside of the container (30). By applying an extension/contraction force to both ends of each of the lateral section packing members (20) in the container (30) the lateral section packing members (20) deform toward the respective lateral surface (Ps) of the item to be packed (P) causing the item to be packed (P) to be sandwiched from both lateral surfaces (Ps) thereof by the pair of long lateral section packing members (20).

No. of Pages : 26 No. of Claims : 5

(12) PATENT APPLICATION PUBLICATION
(21) Application No.8968/DELNP/2014 A
(19) INDIA
(22) Date of filing of Application :27/10/2014
(43) Publication Date : 22/05/2015

(54) Title of the invention : ABSORBENT ARTICLE HAVING CHARACTERISTIC WAIST END

(51) International classification :A61F13/496
(31) Priority Document No :PCT/CN2012/075490
(32) Priority Date :15/05/2012
(33) Name of priority country :China
(86) International Application No :PCT/CN2013/074721
Filing Date :25/04/2013
(87) International Publication No :WO 2013/170695
(61) Patent of Addition to Application Number :NA
Filing Date :NA
(62) Divisional to Application Number :NA
Filing Date :NA

(71)**Name of Applicant :**
1)THE PROCTER & GAMBLE COMPANY
Address of Applicant :One Procter & Gamble Plaza Cincinnati Ohio 45202 U.S.A.
(72)**Name of Inventor :**
1)MORIMOTO Koichi
2)YONEMURA Katsuhiro
3)LAVON Gary Dean

(57) Abstract :
An absorbent article (20) continuous in a longitudinal direction and a transverse direction comprises a front belt portion (84) a back belt portion (86) and an absorbent main body (38). The center of the front belt portion (84) is joined to a front waist panel (52) of the absorbent main body (38) the center of the back belt portion (86) is joined to a back waist panel (54) of the absorbent main body (38) the front and back belt portion (84,86) each having a left side panel and a right side panel where the absorbent main body (38) does not overlap and the respective left and right side panels of the front belt portion (84) and the back belt portion (86) are joined with each other only at the respective transverse edges to form a waist opening (36) and two leg openings (34) each front belt portion (84) and back belt portion (86) having transversely continuous proximal and distal edges the proximal edges (90F,0B) being located closer than the distal edge (88F,88B) relative to the longitudinal center of the article wherein: the absorbent main body comprises a main body graphic zone (160); the front belt portion and the back belt portion each have a waist end region (FWE,BWE) adjacent the waist opening (36) wherein the front and back waist panels (52,54) of the absorbent main body (38) do not overlap with the front or back waist end regions (FWE,BWE); the front belt portion and the back belt portion (84,86) each have a leg end portion adjacent the proximal edges (90F,90B); the left and right side panels of the front belt portion (84) and the back belt portion (86) each have a tummy belt region between the waist end region and the leg end region; the waist end region having an opacity of at least 15 points greater than that of the tummy belt region.

No. of Pages : 19 No. of Claims : 20

(12) PATENT APPLICATION PUBLICATION
(19) INDIA
(22) Date of filing of Application :27/10/2014
(21) Application No.8969/DELNP/2014 A
(43) Publication Date : 22/05/2015

(54) Title of the invention : FGFR INHIBITOR FOR USE IN THE TREATMENT OF HYPOPHOSPHATEMIC DISORDERS

(51) International classification :A61K31/506,A61P19/08
(31) Priority Document No :61/617889
(32) Priority Date :30/03/2012
(33) Name of priority country :U.S.A.
(86) International Application No :PCT/EP2013/056811
Filing Date :29/03/2013
(87) International Publication No :WO 2013/144339
(61) Patent of Addition to Application Number :NA
Filing Date :NA
(62) Divisional to Application Number :NA
Filing Date :NA

(71)**Name of Applicant :**
1)NOVARTIS AG
Address of Applicant :Lichtstrasse 35 CH 4056 Basel Switzerland
(72)**Name of Inventor :**
1)KNEISSEL Michaela
2)GUAGNANO Vito
3)GRAUS PORTA Diana
4)W–HRLE Simon

(57) Abstract :
The present invention relates generally wild-type - vehicle Hyp - vehicle Hyp - BGJ398 to 3-(2,6-Dichloro-3,5-dimethoxy-phenyl)-l-{6-[4-(4- ethyl-piperazin- 1-yl)-phenylamino]-pyrimid-4-yl} -1- methyl-urea or a pharmaceutically acceptable salt or solvate thereof or a pharmaceutical composition com prising 3-(2,6-Dichloro-3,5-dimethoxy-phenyl)-l-{6- [4-(4-ethyl-piperazin-l-yl)-phenylamino]-pyrimid-4- yl} -1-methyl-urea or a pharmaceutically acceptable salt or solvate thereof for use in the treatment of X-linked hypophosphatemic rickets (XLH), autosomal dominant hypophosphatemic rickets (ADHR), autosomal recess ive hypophosphatemic rickets (ARHR), tumor-induced osteomalacia, post-renal transplant hypophosphatemia, epidermal nevus syndrome, osteoglophonic dysplasia or McCune-Albright syndrome.

No. of Pages : 33 No. of Claims : 10

(12) PATENT APPLICATION PUBLICATION
(21) Application No.8904/DELNP/2014 A
(19) INDIA
(22) Date of filing of Application :24/10/2014
(43) Publication Date : 22/05/2015

(54) Title of the invention : DISPOSABLE DIAPER

(51) International classification :A61F13/49,A61F13/56
(31) Priority Document No :2012083047
(32) Priority Date :30/03/2012
(33) Name of priority country :Japan
(86) International Application No :PCT/JP2013/059340
Filing Date :28/03/2013
(87) International Publication No :WO 2013/147061
(61) Patent of Addition to Application Number :NA
Filing Date :NA
(62) Divisional to Application Number :NA
Filing Date :NA

(71)**Name of Applicant :**
1)UNICHARM CORPORATION
Address of Applicant :182 Shimobun Kinsei cho Shikokuchuo shi Ehime 7990111 Japan
(72)**Name of Inventor :**
1)SAKAGUCHI Satoru

(57) Abstract :
A fastening tape (100) provided to this disposable diaper (10) has a substrate sheet (120) and a hook sheet (110) that is affixed to the substrate sheet (120) and to which a plurality of engagement hooks (111) are provided. The engagement force of the fastening tape (100) is 0.3 1.5 N/30 mm inclusive. The bending rigidity value of the fastening tape (100) in the direction (AR2) of approach of the surface of the substrate sheet (120) is lower than the bending rigidity value of the fastening tape (100) in the direction (AR1) of approach of surface of the the hook sheet (110).

No. of Pages : 22 No. of Claims : 6

(12) PATENT APPLICATION PUBLICATION
(19) INDIA
(22) Date of filing of Application :24/10/2014
(21) Application No.8905/DELNP/2014 A
(43) Publication Date : 22/05/2015

(54) Title of the invention : NATURAL BIOCOMPOSITE POWDER PREPARED FROM PICHIA PASTORIS BIOMASS METHOD OF PREPARATION AND ITS USE AS EXCIPIENT

(51) International classification :A61K47/36
(31) Priority Document No :61/614789
(32) Priority Date :23/03/2012
(33) Name of priority country :U.S.A.
(86) International Application No :PCT/IB2013/000403
Filing Date :15/03/2013
(87) International Publication No :WO 2013/140222
(61) Patent of Addition to Application Number :NA
Filing Date :NA
(62) Divisional to Application Number :NA
Filing Date :NA

(71)**Name of Applicant :**
1)PHARMA73 S.A.
Address of Applicant :Herdade do Burrazeiro Rio de Moinhos PT 7150 090 Borba Portugal
(72)**Name of Inventor :**
1)ANDRADE DE FREITAS Maria Filomena
2)AIME ROCA Christophe Fran§ois
3)DA SILVA CRUZ Fernando Miguel
4)DASCENSƒO CARVALHO FERNANDES DE MIRANDA REIS Maria
5)DA SILVA FARINHA Inªs
6)FERREIRA CHAGAS B¡rbara
7)FREITAS OLIVEIRA Rui Manuel

(57) Abstract :
The present invention concerns a natural biocomposite powder prepared from the biomass of yeast Pichia pastoris comprising chitin glucan complex (CGC) and mannose containing polysaccharides. In a second aspect the invention concerns the method of preparation of the natural bio composite powder. The invention also concerns the method to obtain Pichia pastoris biomass with increased CGC content as well as increased chitin to glucan content in the CGC. Finally the invention concerns the use of the natural bio composite powder prepared from the cell wall of yeast Pichia pastoris by the method according to the invention as excipient in the pharmaceutical cosmetics or food industries.

No. of Pages : 69 No. of Claims : 52

(12) PATENT APPLICATION PUBLICATION
(19) INDIA
(22) Date of filing of Application :24/10/2014
(21) Application No.8906/DELNP/2014 A
(43) Publication Date : 22/05/2015

(54) Title of the invention : UNSATURATED FATTY ALCOHOL COMPOSITIONS AND DERIVATIVES FROM NATURAL OIL METATHESIS

(51) International classification :C07C29/147,C07C33/025
(31) Priority Document No :61/637574
(32) Priority Date :24/04/2012
(33) Name of priority country :U.S.A.
(86) International Application No :PCT/US2013/037568
Filing Date :22/04/2013
(87) International Publication No :WO 2013/163071
(61) Patent of Addition to Application Number :NA
Filing Date :NA
(62) Divisional to Application Number :NA
Filing Date :NA

(71)**Name of Applicant :**
1)ELEVANCE RENEWABLE SCIENCES INC.
Address of Applicant :2501 Davey Road Woodridge IL 60517 U.S.A.
(72)**Name of Inventor :**
1)DI BIASE Stephen A.
2)WAMPLER Keith M.
3)ALLEN David R.
4)BERNHARDT Randal J.
5)LITTICH Ryan

(57) Abstract :
Unsaturated alcohol compositions are obtained by reducing a metathesis derived hydrocarby! unsaturated ester. Also disclosed is a process for preparing an unsaturated alcohol composition where a metathesis derived hydrocarby! carbonyl compound is reacted in the presence of a silane compound an organic solvent and a catalyst system prepared from a metallic complex and a reducing agent. This mixture is then hydrolyzed with a metallic base and then mixed with organic solvent. The resultant mixture is then separated washed dried and/or purified to produce the unsaturated alcohol composition. The unsaturated alcohol derivatives are useful in many end use applications including for example lubricants functional fluids fuels functional additives for such lubricants functional fluids and fuels plasticizers asphalt additives friction reducing agents plastics and adhesives.

No. of Pages : 31 No. of Claims : 30

(12) PATENT APPLICATION PUBLICATION
(21) Application No.8907/DELNP/2014 A
(19) INDIA
(22) Date of filing of Application :24/10/2014
(43) Publication Date : 22/05/2015

(54) Title of the invention : CONTROLLING A SWITCHED MODE POWER SUPPLY WITH MAXIMISED POWER EFFICIENCY

(51) International classification :H02M3/335
(31) Priority Document No :NA
(32) Priority Date :NA
(33) Name of priority country :NA
(86) International Application No :PCT/EP2012/057280
Filing Date :20/04/2012
(87) International Publication No :WO 2013/156079
(61) Patent of Addition to Application Number :NA
Filing Date :NA
(62) Divisional to Application Number :NA
Filing Date :NA

(71)**Name of Applicant :**
1)TELEFONAKTIEBOLAGET LM ERICSSON (PUBL)
Address of Applicant :S 164 83 Stockholm Sweden
(72)**Name of Inventor :**
1)KARLSSON Magnus
2)PERSSON Oscar

(57) Abstract :
A control circuit (200) operable to generate a control signal (D) to control the duty cycle of a switched mode power supply (100). The control circuit (200) comprises a. reference signal generator (210) operable to receive a signal indicative of an input voltage (V) of the switched mode power supply (100) and generate a reference signal (V) that is a function of the input voltage (V) and an offset reference signal generator (220) operable to generate an offset reference signal (V) by combining the reference signal (V) with an offset signal (V) the offset signal (v) being independent of the input voltage (V) The control circuit (200) further comprises an error signal generator (230) arranged to receive a signal indicative of an output voltage (V) of the switched mode power supply (100) and operable to generate an error signal (V) based on the offset reference signal (V) and based on the output voltage (V). The control circuit (200) also includes a duty cycle control signal generator (250) operable to generate the control signal (D) to control the duty cycle of the switched mode power supply (100) in dependence upon the error signal (V)

No. of Pages : 54 No. of Claims : 19

(12) PATENT APPLICATION PUBLICATION
(21) Application No.8659/DELNP/2014 A
(19) INDIA
(22) Date of filing of Application :16/10/2014
(43) Publication Date : 22/05/2015

(54) Title of the invention : ASSEMBLY COMPOSED OF A SADDLE AND A SADDLE COMPARTMENT FOR MOTORCYCLES

(51) International classification :B62J1/12,B62K19/46
(31) Priority Document No :MI2012U000151
(32) Priority Date :13/04/2012
(33) Name of priority country :Italy
(86) International Application No :PCT/EP2013/057661
Filing Date :12/04/2013
(87) International Publication No :WO 2013/153193
(61) Patent of Addition to Application Number :NA
Filing Date :NA
(62) Divisional to Application Number :NA
Filing Date :NA

(71)**Name of Applicant :**
1)PIAGGIO & C. S.P.A.
Address of Applicant :Viale Rinaldo Piaggio 25 I 56025 Pontedera PISA Italy
(72)**Name of Inventor :**
1)DI CANDIA Antonio
2)GRACCI Alberto

(57) Abstract :
An assembly composed of a saddle (10) and of a saddle compartment (12) for a motorcycle is described. The saddle (10) comprises an upper padded portion which constitutes the seat for the rider and/or passenger of the motorcycle and a substantially rigid bottom portion (14) operatively connected to the relative saddle compartment (12) by hinge means (16). The saddle compartment (12) is made integral with a fixed portion of the motorcycle. The hinge means (16) enable the saddle (10) to pass from a closed position in which said saddle (10) is positioned substantially horizontally above the saddle compartment (12) and permits the rider and any passenger of the motorcycle to sit on it and an open position in which said saddle (10) is positioned in a substantially vertical position and permits access to the saddle compartment (12). The assembly comprises at least one gas spring (18) attached to a fixed portion of the motorcycle and operatively connected at its upper end to the saddle (10). Between the upper end of the gas spring and the saddle (10) articulated connection means (20 22) are interposed which permit said saddle (10) to maintain a stable open position.

No. of Pages : 14 No. of Claims : 8

(12) PATENT APPLICATION PUBLICATION
(19) INDIA
(22) Date of filing of Application :27/10/2014
(21) Application No.8977/DELNP/2014 A
(43) Publication Date : 22/05/2015

(54) Title of the invention : TWIN SCREW EXTRUDER PRESS FOR SOLID/FLUID SEPARATION

(51) International classification :B01D29/82
(31) Priority Document No :61/620772
(32) Priority Date :05/04/2012
(33) Name of priority country :U.S.A.
(86) International Application No :PCT/CA2013/050279
Filing Date :05/04/2013
(87) International Publication No :WO 2013/149350
(61) Patent of Addition to Application Number :NA
Filing Date :NA
(62) Divisional to Application Number :NA
Filing Date :NA

(71)**Name of Applicant :**
1)GREENFIELD SPECIALTY ALCOHOLS INC.
Address of Applicant :20 Toronto Street Suite 1400 Toronto Ontario M5C 2B8 Canada
(72)**Name of Inventor :**
1)LEHOUX Richard Romeo
2)BRADT Christopher Bruce

(57) Abstract :
Disclosed is a solid/liquid separation apparatus including an extruder press combined with a solid/fluid separation module for separating fluid from a mass of solids compressed by the extruder at elevated pressures. The extruder includes two or more extruder screws with flighting intercalated at least along a part of the extruder barrel. The separation module forms a continuation of the barrel receives the pressurized mass and at least a portion of the twin screws and includes a filter pack consisting of a filter plate and a backer plate. The filter plate has a throughgoing filter slot extending away from a core opening and into the filter plate for directing fluid away from the core opening. The backer plate has a core opening shaped and sized equal to the barrel and defines a passage for guiding fluid collected in the filter slot to an exterior of the filter pack.

No. of Pages : 51 No. of Claims : 19

(12) PATENT APPLICATION PUBLICATION
(21) Application No.8978/DELNP/2014 A
(19) INDIA
(22) Date of filing of Application :27/10/2014
(43) Publication Date : 22/05/2015

(54) Title of the invention : BUILDING BLOCK AS WELL AS AN INSERT PIECE TO BE APPLIED IN SUCH A BUILDING BLOCK

(51) International classification :E04B2/18
(31) Priority Document No :BE2012/0216
(32) Priority Date :30/03/2012
(33) Name of priority country :Belgium
(86) International Application No :PCT/IB2013/052537
Filing Date :29/03/2013
(87) International Publication No :WO 2013/144913
(61) Patent of Addition to Application Number :NA
Filing Date :NA
(62) Divisional to Application Number :NA
Filing Date :NA

(71)**Name of Applicant :**
1)VANDENBEMPT PATENT CV
Address of Applicant :Wingepark 5a B 3110 Rotselaar Belgium
(72)**Name of Inventor :**
1)VANDENBEMPT Patrick

(57) Abstract :
Building block (2) formed of a body (19) in which are inserted one or several insert pieces (1) whereby a first and a complementary second coupling part (28,29) are mainly formed of the one or several synthetic insert pieces (1) so as to be able to couple such building blocks (2) to one another and whereby the first coupling part (28) and the second coupling part (29) are complementary in such a way that after the adjacent building blocks (2) have been coupled the coupled building blocks (2) concerned are coupled to one another in an immobile manner by making the coupling means (27) concerned work in conjunction with one another.

No. of Pages : 44 No. of Claims : 15

(12) PATENT APPLICATION PUBLICATION
(19) INDIA
(22) Date of filing of Application :27/10/2014
(21) Application No.8979/DELNP/2014 A
(43) Publication Date : 22/05/2015

(54) Title of the invention : STABLE FERMENTED MILK PRODUCTS AND METHODS

(51) International classification :A23C9/137,A23L1/0524
(31) Priority Document No :61/619737
(32) Priority Date :03/04/2012
(33) Name of priority country :U.S.A.
(86) International Application No :PCT/EP2013/055410
Filing Date :15/03/2013
(87) International Publication No :WO 2013/149808
(61) Patent of Addition to Application Number :NA
Filing Date :NA
(62) Divisional to Application Number :NA
Filing Date :NA

(71)**Name of Applicant :**
1)CP KELCO APS
Address of Applicant :Ved Banen 16 DK 4623 Lille Skensved Denmark
(72)**Name of Inventor :**
1)NG Lian Ying
2)RIIS Soeren Bulow
3)LOHMANN Tina Benne
4)TSAO Min Ling Marlene
5)BJERGEGAARD Camilla

(57) Abstract :
Methods are provided for making a fermented milk product in which a stabilizing additive is introduced before fermentation. The methods generally include (1) combining milk and pectin to form a mixture (2) heat treating the mixture and (3) fermenting the mixture. In some embodiments the methods further include combining the milk and pectin with a low acyl gellan gum. The methods also may include homogenizing the mixture before heat treating the mixture and/or after fermenting the mixture. Also provided in embodiments herein are fermented milk products.

No. of Pages : 21 No. of Claims : 25

(12) PATENT APPLICATION PUBLICATION
(21) Application No.8936/DELNP/2014 A
(19) INDIA
(22) Date of filing of Application :24/10/2014
(43) Publication Date : 22/05/2015

(54) Title of the invention : ROLLER CRUSHER WITH CHEEK PLATES

(51) International classification :B02C4/02,B02C4/28
(31) Priority Document No :13/451915
(32) Priority Date :20/04/2012
(33) Name of priority country :U.S.A.
(86) International Application No :PCT/IB2013/053100
Filing Date :19/04/2013
(87) International Publication No :WO 2013/156969
(61) Patent of Addition to Application Number :NA
Filing Date :NA
(62) Divisional to Application Number :NA
Filing Date :NA

(71)**Name of Applicant :**
1)METSO MINERALS INDUSTRIES INC.
Address of Applicant :20965 Crossroads Circle Waukesha Wisconsin 53186 U.S.A.
(72)**Name of Inventor :**
1)REZNITCHENKO Vadim
2)HARBOLD Keith

(57) Abstract :
The present invention relates to a roller crusher (1) having a base frame (11) and a roller frame (6) movably connected to said base frame(11).Two generally parallel rotatable rollers (7,8) separated from each other by a gap are arranged in said roller frame(6). The roller crusher (1) further comprises a feeding arrangement (2) mounted to the base frame (11) for feeding material to the rollers (7,8) and at least one balancing cylinder (17,18) is provided which are connected to and arranged to manipulate the roller frame (6) relative to the base frame (11) such that the position of the rollers (7,8) relative to the feeding arrangement (2) can be adjusted. Front and rear cheek plates (28) are provided at the roller frame (6) partially covering front and rear end surfaces of one of the rollers(7,8) and at least partially covering an opening between the feeding arrangement (2) and the two rollers(7,8) the cheek plates (28) being fixedly mounted to the roller frame(6).

No. of Pages : 18 No. of Claims : 15

(12) PATENT APPLICATION PUBLICATION
(21) Application No.8937/DELNP/2014 A
(19) INDIA
(22) Date of filing of Application :24/10/2014
(43) Publication Date : 22/05/2015

(54) Title of the invention : HAIR VOLUMIZING DEVICE THAT EMPLOYS INDIVIDUAL TEETH WITHOUT LEAVING A VISIBLE PATTERN

(51) International classification :A45D2/40
(31) Priority Document No :61/616955
(32) Priority Date :28/03/2012
(33) Name of priority country :U.S.A.
(86) International Application No :PCT/US2013/034162
Filing Date :27/03/2013
(87) International Publication No :WO 2013/148876
(61) Patent of Addition to Application Number :NA
Filing Date :NA
(62) Divisional to Application Number :NA
Filing Date :NA

(71)**Name of Applicant :**
1)OOMPH INNOVATIONS LLC.
Address of Applicant :21 Columbus Ave. #233 San Francisco CA 94111 U.S.A.
(72)**Name of Inventor :**
1)LUND Patricia A.
2)SCHWARTZ William M.

(57) Abstract :
A hair volumizing device designed specifically for adding lift or volume to any hairstyle. The device comprises two arms with heated interlocking plates that employ interlocking two dimensional arrays of outwardly projecting individual teeth with alternating spaces. The individual tooth design and the two dimensional array pattern provide substantial lift and holding strength. The individual teeth of the volumizing device transforms the under layer of hair of a person into a matrix that can support the outer or upper visible layer of hair to create volume. The various embodiments of this concept also minimize any discernible pattern left in the hair.

No. of Pages : 24 No. of Claims : 21

(12) PATENT APPLICATION PUBLICATION
(19) INDIA
(22) Date of filing of Application :24/10/2014
(21) Application No.8938/DELNP/2014 A
(43) Publication Date : 22/05/2015

(54) Title of the invention : IMPROVED DILUTE CHEMICAL REACTION PROCESS WITH MEMBRANE SEPARATION STEP

(51) International classification :B01D61/02,B01D61/12
(31) Priority Document No :12165047.7
(32) Priority Date :20/04/2012
(33) Name of priority country :EPO
(86) International Application No :PCT/EP2013/058176
Filing Date :19/04/2013
(87) International Publication No :WO 2013/156600
(61) Patent of Addition to Application Number :NA
Filing Date :NA
(62) Divisional to Application Number :NA
Filing Date :NA

(71)**Name of Applicant :**
1)VLAAMSE INSTELLING VOOR TECHNOLOGISCH ONDERZOEK (VITO)
Address of Applicant :Boeretang 200 B 2400 Mol Belgium
(72)**Name of Inventor :**
1)BUEKENHOUDT Anita
2)VANDEZANDE Pieter
3)ORMEROD Dominique

(57) Abstract :
Disclosed is a process for carrying out a cyclisation reaction, a polymerization reaction, an enzymatic reaction show - ing substrate inhibition, an enzymatic reaction showing product inhibition, a reaction showing precipitation of the substrate or of a reactant, the process comprising the steps of · a) diluting a fresh substrate (X) with solvent (S) to form a diluted substrate- solvent o mixture, and supplying this mixture to a reactor (2), · b) causing the reaction medium in the reactor to react, · c) discharging reaction mixture comprising reaction product, solvent, and substrate that has not reacted, to a first filtration membrane (6) which is permeable o to the solvent and impermeable to the substrate and to the catalyst or at least one of the reactants, · d) returning solvent from the per - meate side (11) of the first membrane to dilute the fresh substrate, and · e) returning retentate (10) comprising substrate which has not reacted, from the first filtration membrane to the reactor.

No. of Pages : 42 No. of Claims : 22

(12) PATENT APPLICATION PUBLICATION
(19) INDIA
(22) Date of filing of Application :24/10/2014
(21) Application No.8939/DELNP/2014 A
(43) Publication Date : 22/05/2015

(54) Title of the invention : PARENTERAL FORMULATIONS FOR ADMINISTERING MACROLIDE ANTIBIOTICS

(51) International classification :A61K31/7048
(31) Priority Document No :61/616196
(32) Priority Date :27/03/2012
(33) Name of priority country :U.S.A.
(86) International Application No :PCT/US2013/034179
Filing Date :27/03/2013
(87) International Publication No :WO 2013/148891
(61) Patent of Addition to Application Number :NA
Filing Date :NA
(62) Divisional to Application Number :NA
Filing Date :NA

(71)**Name of Applicant :**
1)CEMPRA PHARMACEUTICALS INC.
Address of Applicant :6340 Quadrangle Drive Chapel Hill North Carolina 27517 U.S.A.
(72)**Name of Inventor :**
1)PEREIRA David E.
2)WU Sara
3)FERNANDES Prabhavathi

(57) Abstract :
Pharmaceutical compositions adapted for the parenteral administration including intravenous administration of triazole containing macrolide antibiotics and methods or their use in the treatment of bacterial protozoal and other infections are described herein. Also described herein are solid solution and liquid formulations for such other therapeutic compounds that are characterized by low solubility and/or low basicity. It has been surprisingly discovered that the formulations described herein that include of one or more lactic acids one or more amino acids or combinations thereof including any pharmaceutically acceptable salts of the foregoing are useful for the parenteral delivery of such low solubility and/or low basicity therapeutic compounds.

No. of Pages : 55 No. of Claims : 39

(12) PATENT APPLICATION PUBLICATION
(21) Application No.8844/DELNP/2014 A
(19) INDIA
(22) Date of filing of Application :21/10/2014
(43) Publication Date : 22/05/2015

(54) Title of the invention : MATRIX IMAGE SENSOR PROVIDING BIDIRECTIONAL CHARGE TRANSFER WITH ASYMMETRIC GATES

(51) International classification :H01L27/148,H01L27/146
(31) Priority Document No :1254070
(32) Priority Date :03/05/2012
(33) Name of priority country :France
(86) International Application No :PCT/EP2013/057546
Filing Date :11/04/2013
(87) International Publication No :WO 2013/164169
(61) Patent of Addition to Application Number :NA
Filing Date :NA
(62) Divisional to Application Number :NA
Filing Date :NA

(71)**Name of Applicant :**
1)E2V SEMICONDUCTORS
Address of Applicant :Avenue de Rochepleine F 38120 Saint Egr¨ve France
(72)**Name of Inventor :**
1)MAYER Frdric

(57) Abstract :
The invention relates to image sensors more particularly to time delay and integration (TDI) sensors. According to the invention the sensor comprises rows of photodiodes alternated with rows of gates adjacent the photodiodes. The gates are asymmetric on one side they lie adjacent a photodiode and on the other side they comprise narrow gate fingers (20) that extend towards another photodiode. Because of their narrow width the fingers endow the charge transfer with directionality. Between two successive photodiodes (PH1,PH2) there are two gates (G2B ,G2A) both of which lie adjacent both photodiodes the first gate having its narrow fingers turned toward the first photodiode and the second gate having its narrow fingers turned toward the second photodiode. It is possible to choose the direction of charge transfer in the sensor by neutralising either the first gate or the second gate the other gate receiving alternated potentials enabling charge transfer from one photodiode to the other.

No. of Pages : 27 No. of Claims : 9

(12) PATENT APPLICATION PUBLICATION
(19) INDIA
(22) Date of filing of Application :21/10/2014
(21) Application No.8845/DELNP/2014 A
(43) Publication Date : 22/05/2015

(54) Title of the invention : PNEUMATIC OBJECT PROVIDED WITH A GASTIGHT LAYER BASED ON A THERMOPLASTIC ELASTOMER AND ON A LAMELLAR FILLER

(51) International classification :B60C1/00,C08K3/34,C08L53/00
(31) Priority Document No :1254037
(32) Priority Date :03/05/2012
(33) Name of priority country :France
(86) International Application No :PCT/EP2013/057527
Filing Date :11/04/2013
(87) International Publication No :WO 2013/164168
(61) Patent of Addition to Application Number :NA
Filing Date :NA
(62) Divisional to Application Number :NA
Filing Date :NA

(71)**Name of Applicant :**
1)COMPAGNIE GENERALE DES ETABLISSEMENTS MICHELIN
Address of Applicant :12 cours Sablon F 63000 Clermont Ferrand France
2)MICHELIN RECHERCHE ET TECHNIQUE S.A.
(72)**Name of Inventor :**
1)ABAD Vincent
2)LEMAL Vincent
3)LIBERT Romain

(57) Abstract :
Pneumatic object or inflatable item provided with a gastight elastomer layer comprising at least one polyisobutylene block thermoplastic elastomer and a lamellar filler such that > 1.2 and > 1.2 wherein: Z is a direction normal to the gastight elastomer layer; X and Y are two directions orthogonal to and andare the dynamic compression moduli of the gastight elastomer layer along directions X,Y and Z respectively.

No. of Pages : 30 No. of Claims : 19

(12) PATENT APPLICATION PUBLICATION
(19) INDIA
(22) Date of filing of Application :21/10/2014
(21) Application No.8847/DELNP/2014 A
(43) Publication Date : 22/05/2015

(54) Title of the invention : SPOT WELDING JOINT

(51) International classification :B23K11/16,B23K11/11,C22C38/00
(31) Priority Document No :2012100324
(32) Priority Date :25/04/2012
(33) Name of priority country :Japan
(86) International Application No :PCT/JP2013/062198
Filing Date :25/04/2013
(87) International Publication No :WO 2013/161937
(61) Patent of Addition to Application Number :NA
Filing Date :NA
(62) Divisional to Application Number :NA
Filing Date :NA

(71)**Name of Applicant :**
1)NIPPON STEEL & SUMITOMO METAL CORPORATION
Address of Applicant :6 1 Marunouchi 2 chome Chiyoda ku Tokyo 1008071 Japan
(72)**Name of Inventor :**
1)WATANABE Fuminori
2)TANAKA Tomohito
3)FURUSAKO Seiji
4)MIYAZAKI Yasunobu
5)HAMATANI Hideki
6)OIKAWA Hatsuhiko

(57) Abstract :
The present invention addresses the problem in relation to spot welding of steel plates having a tensile strength of 750 to 2500 MPa in which the toughness is liable to be insufficient and a sufficient CTS is difficult to ensure of ensuring a sufficiently high joint strength in particular CTS in a stable manner; and providing a highly reliable spot welding joint in which CTS has been ensured in a stable manner. In this spot welding joint the P concentration is measured at a pitch of 1 μm in a rectangular planar region that measures 100 μm — 100 μm is perpendicular to the plate surface and is centered on a point located 100 μm inward from the end part of a nugget in a direction parallel to the plate surface to obtain a measured value of the P concentration for each of the 100 — 100 measurement points; and the average values of the measured values of the P concentration of 20 adjacent measurement points from amongst the 100 — 100 measurement points arranged in a row along the direction parallel to the plate surface are repeatedly calculated while shifted by one point at a time thereby obtaining 81 — 100 average values. In this case the number of average values exceeding a value equal to twice the average P concentration is 0 to 100.

No. of Pages : 47 No. of Claims : 3

(12) PATENT APPLICATION PUBLICATION
(19) INDIA
(22) Date of filing of Application :28/10/2014
(21) Application No.8994/DELNP/2014 A
(43) Publication Date : 22/05/2015

(54) Title of the invention : DISPERSE AZO DYES A PROCESS FOR THE PREPARATION THEREOF AND THE USE THEREOF

(51) International classification :D06P1/18,D06P3/54,C09B29/00
(31) Priority Document No :12178163.7
(32) Priority Date :27/07/2012
(33) Name of priority country :EPO
(86) International Application No :PCT/EP2013/063346
Filing Date :26/06/2013
(87) International Publication No :WO 2014/016072
(61) Patent of Addition to Application Number :NA
Filing Date :NA
(62) Divisional to Application Number :NA
Filing Date :NA

(71)**Name of Applicant :**
1)HUNTSMAN ADVANCED MATERIALS (SWITZERLAND) GMBH
Address of Applicant :Legal Services Department Klybeckstrasse 200 CH 4057 Basel Switzerland
(72)**Name of Inventor :**
1)LAUK Urs
2)NOWACK Patric
3)PETERMANN Ralf
4)DREIER Romeo

(57) Abstract :
The present invention relates to azo dyes of formula (1) wherein R denotes C Calkyl which is unsubstituted or substituted by one or more C Calkoxy groups hydroxyl groups amino groups cyano groups or halogen atoms and which may be interrupted one or more times by the radical O S NR COO or OOC ; R is hydrogen or C Calkyl; either R is cyano and R is halogen or Ris halogen and R is cyano; and Ar represents a carbocyclic or heterocyclic aromatic radical to the process for the preparation thereof to mixtures containing said dyes and to the use thereof in dyeing or printing semi synthetic and especially synthetic hydrophobic fibre materials more especially textile materials.

No. of Pages : 33 No. of Claims : 15

(12) PATENT APPLICATION PUBLICATION
(21) Application No.8920/DELNP/2014 A
(19) INDIA
(22) Date of filing of Application :24/10/2014
(43) Publication Date : 22/05/2015

(54) Title of the invention : FEED COMPOSITION FOR REDUCING RUMINANT METHANOGENESIS

(51) International classification :A23K1/16,A23K1/18
(31) Priority Document No :12164765.5
(32) Priority Date :19/04/2012
(33) Name of priority country :EPO
(86) International Application No :PCT/EP2013/058113
Filing Date :18/04/2013
(87) International Publication No :WO 2013/156574
(61) Patent of Addition to Application Number :NA
Filing Date :NA
(62) Divisional to Application Number :NA
Filing Date :NA

(71)**Name of Applicant :**
1)INTERQUIM S.A.
Address of Applicant :C/ Joan Buscall 10 E 08173 Sant Cugat Del Vall¨s Spain
(72)**Name of Inventor :**
1)BALCELLS TER‰S Joaquim
2)CRESPO MONTERO Francisco Javier

(57) Abstract :
The present invention refers to a method for reducing methane production in ruminants comprising administering to said ruminant a feed composition containing a flavanone glycoside.

No. of Pages : 24 No. of Claims : 13

(12) PATENT APPLICATION PUBLICATION
(21) Application No.8921/DELNP/2014 A
(19) INDIA
(22) Date of filing of Application :24/10/2014
(43) Publication Date : 22/05/2015

(54) Title of the invention : SKIN AND HAIR COLOR CONTROLLING FACTOR

(51) International classification :C12Q1/02
(31) Priority Document No :61/639489
(32) Priority Date :27/04/2012
(33) Name of priority country :U.S.A.
(86) International Application No :PCT/JP2013/062439
Filing Date :26/04/2013
(87) International Publication No :WO 2013/162012
(61) Patent of Addition to Application Number :NA
Filing Date :NA
(62) Divisional to Application Number :NA
Filing Date :NA

(71)**Name of Applicant :**
1)KAO CORPORATION
Address of Applicant :14 10 Nihonbashi Kayabacho 1 chome Chuo ku Tokyo 1038210 Japan
(72)**Name of Inventor :**
1)MURASE Daiki
2)HACHIYA Akira

(57) Abstract :
Autophagic activity is used in adjusting the amount of melanin in keratinocytes controlling skin or hair color and selection of an agent for adjusting the amount of melanin in keratinocytes or an agent for controlling skin or hair color.

No. of Pages : 80 No. of Claims : 15

(12) PATENT APPLICATION PUBLICATION
(19) INDIA
(22) Date of filing of Application :24/10/2014
(21) Application No.8922/DELNP/2014 A
(43) Publication Date : 22/05/2015

(54) Title of the invention : METHOD FOR PRODUCING 5-(DIFLUOROMETHYL)PYRAZINE-2-CARBOXILIC ACID AND PRODUCTION INTERMEDIATE THEREOF

(51) International classification :C07D241/24,C07B61/00
(31) Priority Document No :61/639362
(32) Priority Date :27/04/2012
(33) Name of priority country :U.S.A.
(86) International Application No :PCT/JP2013/062863
Filing Date :25/04/2013
(87) International Publication No :WO 2013/162065
(61) Patent of Addition to Application Number :NA
Filing Date :NA
(62) Divisional to Application Number :NA
Filing Date :NA

(71)**Name of Applicant :**
1)EISAI R&D MANAGEMENT CO. LTD.
Address of Applicant :6 10 Koishikawa 4 chome Bunkyo ku Tokyo 1128088 Japan
(72)**Name of Inventor :**
1)YOSHIZAWA Kazuhiro
2)OMORI Masayuki
3)WATANABE Yuzo
4)NAGAI Mitsuo
5)TAKAHASHI Masabumi
6)FANG Francis G.

(57) Abstract :
5-(Difluoromethyl)pyrazine-2-carboxilic acid, which is a raw material for the construction of 5- (difluoromethyl)pyrazine-2-carboxamide, which is a common partial structural motif of the compound having an A production in hibitory action or a BACE1 inhibitory action, can be industrially advantageously produced by decarboxylating 5- [carboxy(difluoro)methyl]pyrazine-2-carboxylic acid, which is obtainable from 5-chloropyrazine-2-carboxylate.

No. of Pages : 31 No. of Claims : 7

(12) PATENT APPLICATION PUBLICATION
(19) INDIA
(22) Date of filing of Application :24/10/2014
(21) Application No.8923/DELNP/2014 A
(43) Publication Date : 22/05/2015

(54) Title of the invention : UNIVERSAL PATCH ASSEMBLY FOR CLEANING THE BORES OF WEAPONS

(51) International classification :F41A29/00
(31) Priority Document No :61/625391
(32) Priority Date :17/04/2012
(33) Name of priority country :U.S.A.
(86) International Application No :PCT/US2013/036589
Filing Date :15/04/2013
(87) International Publication No :WO 2013/158546
(61) Patent of Addition to Application Number :NA
Filing Date :NA
(62) Divisional to Application Number :NA
Filing Date :NA

(71)**Name of Applicant :**
1)THE OTIS PATENT TRUST
Address of Applicant :P.O. Box 582 Lyons Falls New York 13368 U.S.A.
(72)**Name of Inventor :**
1)WILLIAMS Nicholas
2)BROOKER James R.

(57) Abstract :
A universal gun cleaning patch assembly comprising a support frame having a hub and hub bore a plurality of resiliently deformable legs and a swab. The assembly is radially compressible to effectively wipe the bores of weapons having a wide range of bore diameters. The swab material is preferably made integral with the support frame and may include natural or synthetic fibers and/or laminates of natural and/or synthetic fibers and a metal or plastic mesh embedded in a fabric to effectively scrub the inner bore of the firearm and remove gunpowder residues and excess solvents or oils during the cleaning process. The hub bore may sized to be self tapping on male threads of a cable or rod that is pulled and/or pushed through the bore or the bore may be tapered and include a plurality of deformable fingers to received a quick disconnect stem.

No. of Pages : 18 No. of Claims : 20

(12) PATENT APPLICATION PUBLICATION
(19) INDIA
(22) Date of filing of Application :24/10/2014
(21) Application No.8924/DELNP/2014 A
(43) Publication Date : 22/05/2015

(54) Title of the invention : WIND TURBINE TORQUE LIMITING CLUTCH SYSTEM

(51) International classification :F16D47/04
(31) Priority Document No :13/454378
(32) Priority Date :24/04/2012
(33) Name of priority country :U.S.A.
(86) International Application No :PCT/US2013/030754
Filing Date :13/03/2013
(87) International Publication No :WO 2013/162734
(61) Patent of Addition to Application Number :NA
Filing Date :NA
(62) Divisional to Application Number :NA
Filing Date :NA

(71)**Name of Applicant :**
1)EBO GROUP INC.
Address of Applicant :1441 Wolf Creek Trail Sharon Center Ohio 44274 U.S.A.
(72)**Name of Inventor :**
1)HEIDENREICH David
2)COLE Richard

(57) Abstract :
An asymmetric torque limiting coupling system for use on wind turbines in which a forward torque limiting clutch and a reverse torque limiting clutch are provided in paired relation with the reverse torque limiting clutch having a characteristic slip torque that is significantly less than that of the forward torque limiting clutch. In a specific embodiment disclosed an asymmetric torque limiter interconnects a wind turbine with a generator shaft. The coupling includes an input housing and an output hub with an overrunning mechanism interposed between the two. A first torque limiting mechanism is provided in series interconnection with the overrunning mechanism between the input housing and hub while a second torque limiting mechanism is provided in parallel interconnection with the overrunning mechanism between the input housing and output hub.

No. of Pages : 23 No. of Claims : 19

(12) PATENT APPLICATION PUBLICATION
(19) INDIA
(22) Date of filing of Application :24/10/2014
(21) Application No.8925/DELNP/2014 A
(43) Publication Date : 22/05/2015

(54) Title of the invention : POLYURETHANE GROUT COMPOSITIONS

(51) International classification :C08G18/38,C08G18/12,C08G77/14
(31) Priority Document No :201210165791.4
(32) Priority Date :25/05/2012
(33) Name of priority country :China
(86) International Application No :PCT/CN2013/074547
Filing Date :23/04/2013
(87) International Publication No :WO 2013/174189
(61) Patent of Addition to Application Number :NA
Filing Date :NA
(62) Divisional to Application Number :NA
Filing Date :NA

(71)**Name of Applicant :**
1)HUNTSMAN INTERNATIONAL LLC
Address of Applicant :500 Huntsman Way Salt Lake City Utah 84108 U.S.A.
(72)**Name of Inventor :**
1)WU Xiaodong
2)DAI Yueping
3)PENG Zhi

(57) Abstract :
The present invention typically provides one component polyurethane grout compositions and more specially to grout composition useful for seepage control and quick stoppage of water leakage under high water pressure environment wherein the composition comprises a isocyanate prepolymer and auxiliary components selected from a plasticizer a silane coupling agent a catalyst a cell stabilizer an anionic surfactant a filler a blowing agent or a mixture thereof. The invention also provides the isocyanate prepolymer composition obtained by reacting a polyfunctional isocyanate with a polyfunctional polyol comprising at least one polyether polyol containing relatively low amount of ethylene oxide units and optionally other polyfunctional polyols such as polyester polyols biorenewable polyols or a mixture thereof and at least a monofunctional hydroxyl containing compound wherein the NCO content of said prepolymer is 3% 18%. The resulting grout composition can cure into a solid under water pressure from 1 MPa to 20 MPa.

No. of Pages : 28 No. of Claims : 13

(12) PATENT APPLICATION PUBLICATION
(19) INDIA
(22) Date of filing of Application :24/10/2014
(21) Application No.8931/DELNP/2014 A
(43) Publication Date : 22/05/2015

(54) Title of the invention : MARKER FOR MOBILE COMMUNICATION

(51) International classification :H04B1/59,H05K7/20,B61L3/12
(31) Priority Document No :2012100538
(32) Priority Date :26/04/2012
(33) Name of priority country :Japan
(86) International Application No :PCT/JP2013/062013
Filing Date :24/04/2013
(87) International Publication No :WO 2013/161856
(61) Patent of Addition to Application Number :NA
Filing Date :NA
(62) Divisional to Application Number :NA
Filing Date :NA

(71)**Name of Applicant :**
1)HITACHI LTD.
Address of Applicant :6 6 Marunouchi 1 chome Chiyoda ku Tokyo 1008280 Japan
(72)**Name of Inventor :**
1)UEKI Yosuke
2)OHUCHI Naoki
3)ARATAMA Yuya
4)MATSUSHIMA Kiyoto
5)KOWATARI Takehiko

(57) Abstract :
Provided is a marker for mobile communication that controls temperature increase of an electronic circuit board due to daytime insolation and temperature decrease due to nighttime radiation cooling and effectively balances heat dissipation of heat generated from electronic parts mounted on the circuit board. A wireless communications marker (1) established above ground characterized in having between the electronic circuit board (9) and the top surface of a housing (7) an insulation layer such as an air layer a vacuum layer a foam material layer or a fiber material layer and characterized in that the portion below the electronic circuit board (9) comprises only a material with higher heat conductivity than the insulation layer.

No. of Pages : 29 No. of Claims : 15

(12) PATENT APPLICATION PUBLICATION
(19) INDIA
(22) Date of filing of Application :24/10/2014
(21) Application No.8932/DELNP/2014 A
(43) Publication Date : 22/05/2015

(54) Title of the invention : AIR CONDITIONING/HOT WATER SUPPLY SYSTEM

(51) International classification :F25B1/00,F25B7/00
(31) Priority Document No :NA
(32) Priority Date :NA
(33) Name of priority country :NA
(86) International Application No :PCT/JP2012/061011
Filing Date :25/04/2012
(87) International Publication No :WO 2013/161011
(61) Patent of Addition to Application Number :NA
Filing Date :NA
(62) Divisional to Application Number :NA
Filing Date :NA

(71)**Name of Applicant :**
1)HITACHI LTD.
Address of Applicant :6 6 Marunouchi 1 chome Chiyoda ku Tokyo 1008280 Japan
(72)**Name of Inventor :**
1)KOTANI Masanao
2)KOKUGAN Yoko

(57) Abstract :
Provided is an air conditioning/hot water supply system having high operational efficiency. An internal heat exchanger (15) has: a primary heat transfer pipe (15a) for forming a part of the annular circuit of a refrigerant circuit (10) for air conditioning; and a secondary heat transfer pipe (15b) connected to piping (P) branched from the annular circuit through a pressure reduction device (16). The pressure reduction device (16) reduces the pressure of a first refrigerant flowing therein from the piping (P) depending on an operation mode and causes the first refrigerant the pressure of which has been reduced to flow toward the secondary heat transfer pipe (15b) thereby cooling the first refrigerant flowing through the primary heat transfer pipe (15a).

No. of Pages : 42 No. of Claims : 6

(12) PATENT APPLICATION PUBLICATION
(21) Application No.9/DELNP/2015 A
(19) INDIA
(22) Date of filing of Application :01/01/2015
(43) Publication Date : 22/05/2015

(54) Title of the invention : PANEL FOR AIR DUCTS

(51) International classification :F24F13/02
(31) Priority Document No :U 201200525
(32) Priority Date :06/06/2012
(33) Name of priority country :Spain
(86) International Application No :PCT/ES2013/070366
Filing Date :06/06/2013
(87) International Publication No :WO 2013/182727
(61) Patent of Addition to Application Number :NA
Filing Date :NA
(62) Divisional to Application Number :NA
Filing Date :NA

(71)**Name of Applicant :**
1)SAINT GOBAIN CRISTALERIA S.L.
Address of Applicant :Paseo De La Castellana 77 E 28046 Madrid Spain
(72)**Name of Inventor :**
1)DIEZ MONFORTE Alfonso
2)JUARRANZ MORATILLA No
3)PLATEAUX Claire
4)RODERO ANTUNEZ Carlos

(57) Abstract :
The invention relates to a panel for air ducts formed by a mineral wool based core having an external covering and provided with scoring guidelines for forming prismatic section ducts by means of folding. In addition the panel includes oblique marking lines which together with lines transverse thereto can be cut to form respective portions used as elbows changes of direction or junctions in the duct. One of the panel body edges includes a band marked with lines shading or another form of delineation corresponding to the limit to be reached by an aluminium adhesive tape used to secure the flap on the male side of the duct corresponding to the safety zone that has to be covered with adhesive tape in order to achieve adhesion and sealing which ensure satisfactory leaktightness between different sections of air distribution ducts.

No. of Pages : 11 No. of Claims : 2

(12) PATENT APPLICATION PUBLICATION
(19) INDIA
(22) Date of filing of Application :28/10/2014
(21) Application No.9000/DELNP/2014 A
(43) Publication Date : 22/05/2015

(54) Title of the invention : SYSTEM AND METHOD FOR GROUND FAULT DETECTION AND PROTECTION IN ADJUSTABLE SPEED DRIVES

(51) International classification	:H02H3/16,H02H7/122,H02P29/02
(31) Priority Document No	:13/464014
(32) Priority Date	:04/05/2012
(33) Name of priority country	:U.S.A.
(86) International Application No	:PCT/US2013/037795
Filing Date	:23/04/2013
(87) International Publication No	:WO 2013/165753
(61) Patent of Addition to Application Number	:NA
Filing Date	:NA
(62) Divisional to Application Number	:NA
Filing Date	:NA

(71)**Name of Applicant :**
1)EATON CORPORATION
Address of Applicant :1000 Eaton Boulevard Cleveland Ohio 44122 U.S.A.
(72)**Name of Inventor :**
1)LI Huaqiang
2)FAMILIANT Yakov Lvovich

(57) Abstract :
A system and method for detecting ground faults in an AC motor drive is disclosed. A fault detection and protection system for an AC motor drive includes current sensors to measure first and second phase output currents a voltage sensor to measure a DC link voltage and a desaturation control circuit to determine a voltage and associated current across PWM inverter switches for a third phase of the output. A controller compares the first and second phase currents the measured DC link voltage and the voltage across the PWM inverter switches on the third phase to a plurality of thresholds. The controller detects a ground fault on one of the first second and third phases of the three phase output to the AC motor based on the comparisons of the first and the second phase currents the DC link voltage and the voltage across the switches to the thresholds.

No. of Pages : 35 No. of Claims : 23

(12) PATENT APPLICATION PUBLICATION
(19) INDIA
(22) Date of filing of Application :25/10/2014
(21) Application No.8943/DELNP/2014 A
(43) Publication Date : 22/05/2015

(54) Title of the invention : PERMANENT MAGNET ELECTRIC MACHINE

(51) International classification :H02K1/27
(31) Priority Document No :NA
(32) Priority Date :NA
(33) Name of priority country :NA
(86) International Application No :PCT/US2012/033726
Filing Date :16/04/2012
(87) International Publication No :WO 2013/158059
(61) Patent of Addition to Application Number :NA
Filing Date :NA
(62) Divisional to Application Number :NA
Filing Date :NA

(71)**Name of Applicant :**
1)OTIS ELEVATOR COMPANY
Address of Applicant :Ten Farm Springs Road Farmington Connecticut 06032 U.S.A.
(72)**Name of Inventor :**
1)WANG JimPo
2)PIECH Zbigniew

(57) Abstract :
A rotor for a permanent magnet electric machine includes a rotor core and a plurality of permanent magnet bundles located at the rotor core. Each permanent magnet bundle includes a first magnet of a first magnetic material and a second magnet of a second magnetic material located radially outboard of the first magnet. The second magnet has an increased resistance to demagnetization relative to the first magnet. A permanent magnet electric machine includes a stator and a rotor magnetically interactive with the stator. The rotor includes a rotor core and a plurality of permanent magnet bundles located at the rotor core. Each permanent magnet bundle includes a first magnet of a first magnetic material and a second magnet of a second magnetic material located radially outboard of the first magnet. The second magnet has an increased resistance to demagnetization relative to the first magnet.

No. of Pages : 12 No. of Claims : 19

(12) PATENT APPLICATION PUBLICATION
(19) INDIA
(22) Date of filing of Application :25/10/2014
(21) Application No.8944/DELNP/2014 A
(43) Publication Date : 22/05/2015

(54) Title of the invention : BATTERY FIELD DISCONNECT METHOD

(51) International classification :H02H7/18
(31) Priority Document No :NA
(32) Priority Date :NA
(33) Name of priority country :NA
(86) International Application No :PCT/US2012/034633
Filing Date :23/04/2012
(87) International Publication No :WO 2013/162493
(61) Patent of Addition to Application Number :NA
Filing Date :NA
(62) Divisional to Application Number :NA
Filing Date :NA

(71)**Name of Applicant :**
1)OTIS ELEVATOR COMPANY
Address of Applicant :Ten Farm Springs Road Farmington Connecticut 06032 U.S.A.
(72)**Name of Inventor :**
1)ROGERS Kyle W.

(57) Abstract :
Embodiments are directed to an apparatus comprising terminals providing a voltage a monitor configured to receive an input from an entity external to the apparatus indicating that energy associated with the apparatus is to be selectively coupled to or isolated from the terminals and a protection mechanism coupled to the monitor and configured to be selectively turned on and turned off based on the input received from the external entity.

No. of Pages : 20 No. of Claims : 20

(12) PATENT APPLICATION PUBLICATION
(21) Application No.8945/DELNP/2014 A
(19) INDIA
(22) Date of filing of Application :25/10/2014
(43) Publication Date : 22/05/2015

(54) Title of the invention : MAGNETIC ANCHORED ROBOTIC SYSTEM

(51) International classification :A61B17/00
(31) Priority Document No :61/638828
(32) Priority Date :26/04/2012
(33) Name of priority country :U.S.A.
(86) International Application No :PCT/CN2013/000478
Filing Date :26/04/2013
(87) International Publication No :WO 2013/159572
(61) Patent of Addition to Application Number :NA
Filing Date :NA
(62) Divisional to Application Number :NA
Filing Date :NA

(71)**Name of Applicant :**
1)BIO MEDICAL ENGINEERING (HK) LIMITED
Address of Applicant :2nd Floor Shun Ho Tower 24 30 Ice House Street Central Hong Kong China
(72)**Name of Inventor :**
1)YEUNG Chung Kwong
2)YUNG Kai Leung

(57) Abstract :
A surgical system includes an external anchor an internal anchor and an instrument. The extemal anchor is adapted to be positioned outside a body. The internal anchor is adapted to be inserted into the body via a single entrance port positioned inside the body and magnetically coupled with the external anchor. The instrument is adapted to be inserted into the body via the single entrance port and secured to the internal anchor. The instrument includes an end effector that has multiple degrees of movement via multiple axes.

No. of Pages : 50 No. of Claims : 39

(12) PATENT APPLICATION PUBLICATION
(21) Application No.8947/DELNP/2014 A
(19) INDIA
(22) Date of filing of Application :26/10/2014
(43) Publication Date : 22/05/2015

(54) Title of the invention : MAGNETIC ANCHORED ROBOTIC SYSTEM

(51) International classification :A61B17/94
(31) Priority Document No :61/638828
(32) Priority Date :26/04/2012
(33) Name of priority country :U.S.A.
(86) International Application No :PCT/CN2013/000480
Filing Date :26/04/2013
(87) International Publication No :WO 2013/159573
(61) Patent of Addition to Application Number :NA
Filing Date :NA
(62) Divisional to Application Number :NA
Filing Date :NA

(71)**Name of Applicant :**
1)BIO MEDICAL ENGINEERING (HK) LIMITED
Address of Applicant :2nd Floor Shun Ho Tower 24 30 Ice House Street Central Hong Kong China
(72)**Name of Inventor :**
1)YEUNG Chung Kwong
2)YUNG Kai Leung

(57) Abstract :
A robotic actuator includes an internal anchor and an instrument. The internal anchor is adapted to be inserted into a body via an entrance port positioned inside the body and magnetically coupled with an external anchor positioned outside the body. The instrument is adapted to be inserted into the body via the entrance port and secured to the internal anchor. The instrument includes an end effector having multiple degrees of movement via multiple axes and a plurality of actuators that provide the multiple degrees of movement. A surgical system includes a manipulator an implantable actuator and a controller. The manipulator includes a plurality of integrated sensor/actuators. The sensors of the sensor/actuators are adapted to detect movement about a plurality of axes of movement. The implantable actuator includes a plurality ofjoints providing a plurality of axes of movement. The controller is configured to receive information from the plurality of sensor/actuators that indicates movement of the manipulator about the plurality of axes and to cause the joints of the actuator to move along corresponding axes of movement. Each sensor/actuator of the manipulator detects movement about an axis of movement corresponding to a similar one of the joints of the actuator.

No. of Pages : 73 No. of Claims : 60

(12) PATENT APPLICATION PUBLICATION
(19) INDIA
(22) Date of filing of Application :22/10/2014
(21) Application No.8899/DELNP/2014 A
(43) Publication Date : 22/05/2015

(54) Title of the invention : METHOD AND COMPOSITION FOR DETACKIFYING ORGANIC CONTAMINANTS IN THE PROCESS OF PULPING AND PAPERMAKING

(51) International classification :D21H17/25,D21H17/41,D21H17/00
(31) Priority Document No :201210159396.5
(32) Priority Date :21/05/2012
(33) Name of priority country :China
(86) International Application No :PCT/US2013/040388
Filing Date :09/05/2013
(87) International Publication No :WO 2013/176899
(61) Patent of Addition to Application Number :NA
Filing Date :NA
(62) Divisional to Application Number :NA
Filing Date :NA

(71)**Name of Applicant :**
1)ECOLAB USA INC.
Address of Applicant :370 N. Wabasha Street St. Paul Minnesota 55102 U.S.A.
(72)**Name of Inventor :**
1)YUAN Qing Qing
2)DONG Qun
3)CHEN Zhi
4)SHEN Jian Kun

(57) Abstract :
The present invention discloses a method for detackifying organic contaminants in the process of pulping and papermaking and a composition used for the same. Specifically the invention discloses that the water circulation system of pulping and papermaking process can be provided with non ionic cellulose ether and cationic coagulant in lower amount through which the deposition of organic contaminants can be inhibited under the synergistic action of pre coagulation and detackification.

No. of Pages : 18 No. of Claims : 20

(12) PATENT APPLICATION PUBLICATION
(21) Application No.9015/DELNP/2014 A
(19) INDIA
(22) Date of filing of Application :28/10/2014
(43) Publication Date : 22/05/2015

(54) Title of the invention : 21 CENTURY UNDERWEAR FOR MEN

(51) International classification :A41B9/02
(31) Priority Document No :1020120055069
(32) Priority Date :23/05/2012
(33) Name of priority country :Republic of Korea
(86) International Application No :PCT/KR2012/007661
Filing Date :24/09/2012
(87) International Publication No :WO 2013/176347
(61) Patent of Addition to Application Number :NA
Filing Date :NA
(62) Divisional to Application Number :NA
Filing Date :NA

(71)**Name of Applicant :**
1)YOO Jin Kul
Address of Applicant :4F. 581 28 Samik Center Chang dong Dobong gu Seoul 132 040 Republic of Korea
(72)**Name of Inventor :**
1)YOO Jin Kul

(57) Abstract :
The present invention relates to underwear for men. Information that it is good to maintain the underbody (genital organs) of men cool have been already been attested in scientific theses of foreign universities. It has been proved that the spermatogenic ability of men (genital organs) is further higher in an environment lower by 2 to 4 Celsius than body temperature. However despite the above mentioned scientific evidence underwear for men up to now has been produced in the same simple shape for protection against the outside without distinction from underwear for women. The present invention relates to 21 century underwear for men which is different from conventional underwear for men and which causes improvement in skin health and reproductive ability in a sanitary and health manner. The 21 century underwear for men of the present invention was invented to accomplish the following two purposes: first separating the genital organ area (testicles) of men from the groin area (thigh) so as to keep skin healthy from eczema and avoid the influence of body temperature and second forming ventilation openings at least in three directions under the genital organ (testicles) of men so as to keep the genital organ area further cool and to thus healthily and naturally (without chemicals) improve the reproductive ability of men. That is the present invention is novel 21 century underwear for men which 1) prevents skin disease such as eczema which may be commonly caused between the groin and scrotum of men and separates the genital organ and the body (thigh) area so as to separate the genital organ from the body heat and 2) forms ventilating openings in three or more directions to enable constant ventilation in the genital organ area and to maintain a more sanitary and cool environment thus providing further good influences to the reproductive ability of men.

No. of Pages : 7 No. of Claims : 1

(12) PATENT APPLICATION PUBLICATION
(19) INDIA
(22) Date of filing of Application :28/10/2014
(21) Application No.9017/DELNP/2014 A
(43) Publication Date : 22/05/2015

(54) Title of the invention : SYSTEM AND METHOD FOR HIGH RESISTANCE GROUND FAULT DETECTION AND PROTECTION IN POWER DISTRIBUTION SYSTEMS

(51) International classification :H02H3/52,G01R31/02,H02H7/122
(31) Priority Document No :13/487322
(32) Priority Date :04/06/2012
(33) Name of priority country :U.S.A.
(86) International Application No :PCT/US2013/041753
Filing Date :20/05/2013
(87) International Publication No :WO 2013/184332
(61) Patent of Addition to Application Number :NA
Filing Date :NA
(62) Divisional to Application Number :NA
Filing Date :NA

(71)**Name of Applicant :**
1)EATON CORPORATION
Address of Applicant :1000 Eaton Boulevard Cleveland OH 44122 U.S.A.
(72)**Name of Inventor :**
1)LI Huaqiang

(57) Abstract :
A system and method for detecting high resistance ground faults in a power distribution system is disclosed. A fault detection and protection system is provided that includes a plurality of current sensors to measure current on the three phase output of the converter inverter arrangement of the power distribution system and a controller configured to measure the three phase current on the three phase output extract a fundamental current component for each phase of the three phase output extract a third harmonic component for each phase of the three phase output compare the fundamental current component and the third harmonic component extracted from each phase to a first threshold and a second threshold respectively and detect a ground fault on a phase of the three phase output based on the comparisons of the fundamental current component and the third harmonic component to the first and second thresholds.

No. of Pages : 28 No. of Claims : 20

(12) PATENT APPLICATION PUBLICATION
(19) INDIA
(22) Date of filing of Application :27/10/2014
(21) Application No.8970/DELNP/2014 A
(43) Publication Date : 22/05/2015

(54) Title of the invention : PHARMACEUTICAL DIAGNOSTIC

(51) International classification :A61K31/4439,A61P35/00,C12Q1/68
(31) Priority Document No :61/617284
(32) Priority Date :29/03/2012
(33) Name of priority country :U.S.A.
(86) International Application No :PCT/EP2013/056600
Filing Date :27/03/2013
(87) International Publication No :WO 2013/144249
(61) Patent of Addition to Application Number :NA
Filing Date :NA
(62) Divisional to Application Number :NA
Filing Date :NA

(71)**Name of Applicant :**
1)NOVARTIS AG
Address of Applicant :Lichtstrasse 35 CH 4056 Basel Switzerland
(72)**Name of Inventor :**
1)FURET Pascal
2)FRITSCH Christine
3)MAIRA Sauveur Michel

(57) Abstract :
The invention is directed in part to selective cancer treatment regimes based on assaying for the presence or absence of a mutation in a nucleic acid that encodes glutamine at position 859 of the catalytic p110a subunit of PI3K.

No. of Pages : 53 No. of Claims : 25

(12) PATENT APPLICATION PUBLICATION
(19) INDIA
(22) Date of filing of Application :27/10/2014
(21) Application No.8971/DELNP/2014 A
(43) Publication Date : 22/05/2015

(54) Title of the invention : HANDLING COMMUNICATION SESSIONS IN A COMMUNICATIONS NETWORK

(51) International classification	:H04W76/00,H04L12/14,H04L29/06
(31) Priority Document No	:NA
(32) Priority Date	:NA
(33) Name of priority country	:NA
(86) International Application No	:PCT/EP2012/058505
Filing Date	:09/05/2012
(87) International Publication No	:WO 2013/167178
(61) Patent of Addition to Application Number	:NA
Filing Date	:NA
(62) Divisional to Application Number	:NA
Filing Date	:NA

(71)**Name of Applicant :**
1)TELEFONAKTIEBOLAGET L M ERICSSON (publ)
Address of Applicant :SE 164 83 Stockholm Sweden
(72)**Name of Inventor :**
1)HOLM Jan
2)FERNANDEZ ALONSO Susana

(57) Abstract :
A method and apparatus for handling a communication session in a communications network. An Application Function node receives a request to register a user terminal in the communication network. The Application Function identifies an Access Point used by the terminal to register with the network and send a request message to a Policy and Charging Register Function (PCRF). The request message includes an Access Point Name identifying an Access Point used by the user terminal. The AF receives a response message from the PCRF the response message including an indicator indicating whether the Access Point is an Emergency Access Point. The AF subsequently receives a message from the user terminal that identifies a non emergency terminating node. If the indicator indicates that the Access Point is not an Emergency Access Point the AF allows the communication session. If the indicator indicates that the Access Point is an Emergency Access Point then the AF rejects the communication session.

No. of Pages : 24 No. of Claims : 13

(12) PATENT APPLICATION PUBLICATION
(21) Application No.8972/DELNP/2014 A
(19) INDIA
(22) Date of filing of Application :27/10/2014
(43) Publication Date : 22/05/2015

(54) Title of the invention : WEARING PART ARRANGEMENT FOR PLOUGH SHARE

(51) International classification :A01B15/06
(31) Priority Document No :20120613
(32) Priority Date :24/05/2012
(33) Name of priority country :Norway
(86) International Application No :PCT/NO2013/050091
Filing Date :22/05/2013
(87) International Publication No :WO 2013/176553
(61) Patent of Addition to Application Number :NA
Filing Date :NA
(62) Divisional to Application Number :NA
Filing Date :NA

(71)**Name of Applicant :**
1)KVERNELAND GROUP OPERATIONS NORWAY AS
Address of Applicant :Kverneland Klepp N 4355 Kvernaland Norway
(72)**Name of Inventor :**
1)SKJ†VELAND Magne

(57) Abstract :
A wearing part arrangement for a leading edge (21) of a plough body (1) is described in which a plough point (3) is releasably attached to the plough body (1) the plough point (3) being mirror symmetrical around the longitudinal axis (SA) of the plough point (3) and being provided with a pointed front portion (31).

No. of Pages : 12 No. of Claims : 8

(12) PATENT APPLICATION PUBLICATION
(19) INDIA
(22) Date of filing of Application :27/10/2014
(21) Application No.8973/DELNP/2014 A
(43) Publication Date : 22/05/2015

(54) Title of the invention : DEHYDRATOR SCREEN FOR DOWNHOLE GRAVEL PACKING

(51) International classification :E21B43/08,E21B43/10
(31) Priority Document No :NA
(32) Priority Date :NA
(33) Name of priority country :NA
(86) International Application No :PCT/US2012/037217
Filing Date :10/05/2012
(87) International Publication No :WO 2013/169254
(61) Patent of Addition to Application Number :NA
Filing Date :NA
(62) Divisional to Application Number :NA
Filing Date :NA

(71)**Name of Applicant :**
1)HALLIBURTON ENERGY SERVICES INC.
Address of Applicant :10200 Bellaire Boulevard Houston Texas 77072 U.S.A.
(72)**Name of Inventor :**
1)GRECI Stephen Michael
2)LOPEZ Jean Marc

(57) Abstract :
Certain aspects and features relate to dehydrator screens that are inexpensively made wire mesh or stamped metal screens that can direct carrier fluid from a gravel pack slurry efficiently to one or more screens associated with a base pipe.

No. of Pages : 23 No. of Claims : 20

(12) PATENT APPLICATION PUBLICATION
(21) Application No.9021/DELNP/2014 A
(19) INDIA
(22) Date of filing of Application :28/10/2014
(43) Publication Date : 22/05/2015

(54) Title of the invention : SIPHON PARTICULARLY AN ODOUR TRAP FOR A URINAL A FLOOR DRAIN AND/OR A SHOWER TRAY OR THE LIKE

(51) International classification :E03C1/298,F16L41/02,E03F5/04
(31) Priority Document No :10 2012 103 025.1
(32) Priority Date :05/04/2012
(33) Name of priority country :Germany
(86) International Application No :PCT/DE2013/100093
Filing Date :12/03/2013
(87) International Publication No :WO 2013/149613
(61) Patent of Addition to Application Number :NA
Filing Date :NA
(62) Divisional to Application Number :NA
Filing Date :NA

(71)**Name of Applicant :**
1)URINOWA GMBH
Address of Applicant :Seeber Flur 11 55545 Bad Kreuznach Germany
(72)**Name of Inventor :**
1)KOKARAKIS Theofilos
2)HOFMANN Sofia
3)KOKARAKIS Emanuel

(57) Abstract :
A siphon particularly an odour trap for a waterless urinal a floor drain and/or a shower tray or the like comprises a tubular inlet (1) and at least one outlet (2) the outlet opening (3) of which can be opened and closed to a drain that can be connected by means of a valve (4). The valve (4) comprises a valve lever (6) mounted in an articulated manner in the region of the inlet (1) which has an associated valve surface (7) wherein the valve surface (7) seals the outlet opening (3) in a form fit and/or force fit manner.

No. of Pages : 30 No. of Claims : 20

(12) PATENT APPLICATION PUBLICATION
(19) INDIA
(22) Date of filing of Application :28/10/2014
(21) Application No.9022/DELNP/2014 A
(43) Publication Date : 22/05/2015

(54) Title of the invention : SECURE METHOD FOR REMOTE GRANT OF OPERATING RIGHTS

(51) International classification :H04L9/32,H04L12/28,H04L12/46
(31) Priority Document No :20120110
(32) Priority Date :05/04/2012
(33) Name of priority country :Finland
(86) International Application No :PCT/FI2013/050362
Filing Date :03/04/2013
(87) International Publication No :WO 2013/150186
(61) Patent of Addition to Application Number :NA
Filing Date :NA
(62) Divisional to Application Number :NA
Filing Date :NA

(71)**Name of Applicant :**
1)TOSIBOX OY
Address of Applicant :Elektroniikkatie 10 FI 90590 Oulu Finland
(72)**Name of Inventor :**
1)YLIMARTIMO Veikko
2)KORKALO Mikko
3)JUOPPERI Juho

(57) Abstract :
In the method and system of establishing a trusted relationship first a virtual private network is established between a key device and at least one locking device. Thereafter in order to establish a trusted relationship the key device sends a message encrypted with its private cryptographic key to at least one locking device. The message comprises the certificate of the trusted key device and the certificate of some other device with which the locking device that received the message shall establish a new trusted relationship. By using the established trusted relationship either a trusted relationship between the locking device and a new key device or a trusted relationship between two or more locking devices is established whereby a virtual private network can be established between the locking devices.

No. of Pages : 24 No. of Claims : 9

(12) PATENT APPLICATION PUBLICATION
(19) INDIA
(22) Date of filing of Application :22/10/2014
(21) Application No.8891/DELNP/2014 A
(43) Publication Date : 22/05/2015

(54) Title of the invention : USER INTERFACE FOR BEVERAGE PREPARATON MACHINES

(51) International classification :A47J31/52,A47J31/44
(31) Priority Document No :12165274.7
(32) Priority Date :24/04/2012
(33) Name of priority country :EPO
(86) International Application No :PCT/EP2013/058351
Filing Date :23/04/2013
(87) International Publication No :WO 2013/160278
(61) Patent of Addition to Application Number :NA
Filing Date :NA
(62) Divisional to Application Number :NA
Filing Date :NA

(71)**Name of Applicant :**
1)NESTEC S.A.
Address of Applicant :Av. Nestl 55 CH 1800 Vevey Switzerland
(72)**Name of Inventor :**
1)BESSON Fran§ois
2)PERENTES Alexandre

(57) Abstract :
The invention relates to a Beverage preparation machine (1) comprising: a user interface (13) having a selection element (121) for selecting a first value related to at least one property of beverage; an ingredient processing module for a preparation of a beverage according to the first value with at least one ingredient supplied in a capsule. The user interface (13) comprises a feedback element configured to present a default value for the first value the default value being computed according to values previously used for said at least one property by the machine to prepare beverages.

No. of Pages : 30 No. of Claims : 14

(12) PATENT APPLICATION PUBLICATION
(21) Application No.8893/DELNP/2014 A
(19) INDIA
(22) Date of filing of Application :22/10/2014
(43) Publication Date : 22/05/2015

(54) Title of the invention : METHOD FOR PROTECTING CONFIDENTIALITY OF A FILE DISTRIBUTED AND STORED AT A PLURALITY OF STORAGE SERVICE PROVIDERS

(51) International classification	:H04L9/08,G06F17/30,G06F3/06	(71)**Name of Applicant :**
(31) Priority Document No	:12305544.4	**1)ALCATEL LUCENT**
(32) Priority Date	:16/05/2012	Address of Applicant :148/152 route de la Reine F 92100 Boulogne Billancourt France
(33) Name of priority country	:EPO	(72)**Name of Inventor :**
(86) International Application No	:PCT/EP2013/058075	**1)SHIKFA Abdullatif**
Filing Date	:18/04/2013	**2)PAPILLON Serge**
(87) International Publication No	:WO 2013/171017	
(61) Patent of Addition to Application Number	:NA	
Filing Date	:NA	
(62) Divisional to Application Number	:NA	
Filing Date	:NA	

(57) Abstract :
This method comprises the steps of: - choosing (1) a security parameter n, - segmenting (2) the file in n chunks Sl,...,Sn, - randomly choosing (3) n2 coefficients a for i = 1,..., n and j = 1,..., n, - verifying (3) that the vectors aii,...,aiž, for i = 1,..., n, are linearly independent, otherwise generating the coefficients again, - computing (4) n linear combinations Ci = Si +... + a S +... + a.Sn, for i = 1, n, - choosing (5) n storage service providers Oi,...,O among said plurality of storage service provider, - gener ating (6a; 6b; 6c) n file identifiers IDi,..., IDž designating said file (F), - storing (6a; 6b; 6c) the combination Ci at the storage ser vice provider O in association with the file identifier IDi, for i = 1,..., n, - storing the file identifier ID\and the provider identifier Oi, for i = 1,..., n, in a file descriptor corresponding to the file (F), this file descriptor being stored in a local memory (LM), - storing the set of coefficients an,..., a so that it can be re-associated with the combination Ci, for i = 1, n ; - randomly choosing n super -coeffi cients ai,..., aj ,..., až for j = 1,..., n, - computing a linear over-combination OC = ai-Ci +... + aj . +... + až.Cž, - and storing the over-combination OC and the coefficients ai,..., aj,..., a for j = 1,..., n .

No. of Pages : 34 No. of Claims : 18

(12) PATENT APPLICATION PUBLICATION
(19) INDIA
(22) Date of filing of Application :22/10/2014
(21) Application No.8894/DELNP/2014 A
(43) Publication Date : 22/05/2015

(54) Title of the invention : LIQUID FILTER WITH A DAMPING ELEMENT AND FILTER UNIT FOR A LIQUID FILTER

(51) International classification :B01D35/30
(31) Priority Document No :102012211185.9
(32) Priority Date :28/06/2012
(33) Name of priority country :Germany
(86) International Application No :PCT/EP2013/059907
Filing Date :14/05/2013
(87) International Publication No :WO 2014/000948
(61) Patent of Addition to Application Number :NA
Filing Date :NA
(62) Divisional to Application Number :NA
Filing Date :NA

(71)**Name of Applicant :**
1)ROBERT BOSCH GMBH
Address of Applicant :Postfach 30 02 20 70442 Stuttgart Germany
(72)**Name of Inventor :**
1)KUSTIC Marko

(57) Abstract :
The invention relates to a liquid filter (100) particularly for fuels having a housing (200) in which a filter unit (300) is arranged and having a connection element (400) said connection element (400) being provided in order to supply the liquid into the liquid filter (100) and/or to drain the liquid out of the liquid filter (100) the filter unit (300) being affixed to the connection element (400). In order to increase the filtering effect and reduce the risk and frequency of sudden discharge of particles from the filter element (330) of the filter unit (300) to the clean side (380) of the filter unit (300) according to the invention the filter unit (300) is connected to the connection element (400) by means of at least one damping element such that the transfer of vibrations of the housing (200) to the filter unit (300) is damped. The invention also relates to a filter unit (300) for a liquid filter (100).

No. of Pages : 27 No. of Claims : 14

(12) PATENT APPLICATION PUBLICATION
(19) INDIA
(22) Date of filing of Application :22/10/2014
(21) Application No.8895/DELNP/2014 A
(43) Publication Date : 22/05/2015

(54) Title of the invention : GLYCEROL BASED POLYMER SURFACE ACTIVE CHEMISTRY AND PRODUCTION

(51) International classification :C07C29/94,C07C31/18,C07C31/22
(31) Priority Document No :13/484526
(32) Priority Date :31/05/2012
(33) Name of priority country :U.S.A.
(86) International Application No :PCT/US2013/043506
Filing Date :31/05/2013
(87) International Publication No :WO 2013/181481
(61) Patent of Addition to Application Number :NA
Filing Date :NA
(62) Divisional to Application Number :NA
Filing Date :NA

(71)**Name of Applicant :**
1)NALCO COMPANY
Address of Applicant :1601 W. Diehl Road Naperville IL 60563 U.S.A.
(72)**Name of Inventor :**
1)LI Xiaojin Harry
2)DUGGIRALA Prasad
3)SHIH Joanna L.

(57) Abstract :
The invention provides a method of efficiently producing branched cyclic glycerol based polymer surface active products having ester and alkyl functional groups with a co product as anti biodegrading agent from inexpensive readily available glycerol monomer. The method involves polymerizing glycerol or glycerol with at least another monomer to multiple other monomers in the presence of particular amount of a strong base as the catalyst under a particular distillation environment. The polyol then undergoes esterification alkylation and crosslinking in presence of particular amount of a catalyst under a particular low activity atmospheric environment. The glycerol based polymer surface active products produced by the inventive method are beneficial for reducing lignin extractives and rejects levels in pulping process of papermaking industry.

No. of Pages : 29 No. of Claims : 19

(12) PATENT APPLICATION PUBLICATION
(19) INDIA
(22) Date of filing of Application :28/10/2014
(21) Application No.9010/DELNP/2014 A
(43) Publication Date : 22/05/2015

(54) Title of the invention : ABSORBENT ARTICLES HAVING TEXTURED ZONES

(51) International classification :A61F13/49,A61F13/514,A61F13/515
(31) Priority Document No :61/647061
(32) Priority Date :15/05/2012
(33) Name of priority country :U.S.A.
(86) International Application No :PCT/US2013/040890
Filing Date :14/05/2013
(87) International Publication No :WO 2013/173293
(61) Patent of Addition to Application Number :NA
Filing Date :NA
(62) Divisional to Application Number :NA
Filing Date :NA

(71)**Name of Applicant :**
1)THE PROCTER & GAMBLE COMPANY
Address of Applicant :One Procter & Gamble Plaza Cincinnati Ohio 45202 U.S.A.
(72)**Name of Inventor :**
1)ZINK Ronald Joseph
2)WADE Sarah Marie
3)GLAHN Tina Marie
4)WALTHER Rachel Eden
5)BROWN Darrell Ian
6)LAVON Gary Dean
7)GOYETTE Nicholas Paul
8)ISHIHARA Kaoru
9)BICKING Amanda Margaret
10)JURATOVAC Diana Woehnl

(57) Abstract :
An absorbent article comprises a chassis having a belt portion extending therefrom. The belt portion comprises a side edge a waist opening edge a leg opening edge first and second substrates engaged with each other and elastic elements disposed intermediate the first substrate and the second substrate. The belt portion also comprises a first texture zone comprising a first portion of the substrates and the elastic strands and disposed adjacent to the side edge and the waist opening edge and a second texture zone comprising a second portion of the substrates and the elastic elements and disposed adjacent to the side edge and the leg opening edge. The first texture zone extends at least partially along a first lateral extent of the belt portion and the second texture zone extends at least partially along a second lateral extent of the belt portion.

No. of Pages : 108 No. of Claims : 15

(12) PATENT APPLICATION PUBLICATION
(19) INDIA
(22) Date of filing of Application :28/10/2014
(21) Application No.9011/DELNP/2014 A
(43) Publication Date : 22/05/2015

(54) Title of the invention : ABSORBENT ARTICLES HAVING A BELT PORTION WITH A TEXTURE ZONE HAVING A TEXTURE RATIO

(51) International classification	:A61F13/49,A61F13/514,A61F13/515
(31) Priority Document No	:61/647061
(32) Priority Date	:15/05/2012
(33) Name of priority country	:U.S.A.
(86) International Application No	:PCT/US2013/040914
Filing Date	:14/05/2013
(87) International Publication No	:WO 2013/173310
(61) Patent of Addition to Application Number	:NA
Filing Date	:NA
(62) Divisional to Application Number	:NA
Filing Date	:NA

(71)**Name of Applicant :**
1)THE PROCTER & GAMBLE COMPANY
Address of Applicant :One Procter & Gamble Plaza Cincinnati Ohio 45202 U.S.A.
(72)**Name of Inventor :**
1)WADE Sarah Marie
2)IBRAHIM Farihah
3)ZINK Ronald Joseph II
4)LAVON Gary Dean
5)GLAHN Tina Marie
6)ISHIHARA Kaoru

(57) Abstract :
The present disclosure is directed in part to an absorbent article comprising a chassis comprising a topsheet a backsheet and a core disposed at least partially intermediate the topsheet and the backsheet. The absorbent article comprises a belt portion extending from the chassis. The belt portion comprises a first substrate a second substrate joined to the first substrate and a plurality of elongate elastic elements disposed at least partially intermediate the first substrate and the second substrate. The belt portion comprises a texture zone having a texture ratio of greater than about 5.

No. of Pages : 102 No. of Claims : 15

(12) PATENT APPLICATION PUBLICATION
(21) Application No.9012/DELNP/2014 A
(19) INDIA
(22) Date of filing of Application :28/10/2014
(43) Publication Date : 22/05/2015

(54) Title of the invention : ABSORBENT ARTICLES HAVING TEXTURE ZONES FORMING BACKGROUND PATTERNS AND MACRO PATTERNS

(51) International classification	:A61F13/49,A61F13/514,A61F13/515
(31) Priority Document No	:61/647061
(32) Priority Date	:15/05/2012
(33) Name of priority country	:U.S.A.
(86) International Application No	:PCT/US2013/040886
Filing Date	:14/05/2013
(87) International Publication No	:WO 2013/173289
(61) Patent of Addition to Application Number	:NA
Filing Date	:NA
(62) Divisional to Application Number	:NA
Filing Date	:NA

(71)**Name of Applicant :**
1)THE PROCTER & GAMBLE COMPANY
Address of Applicant :One Procter & Gamble Plaza Cincinnati Ohio 45202 U.S.A.
(72)**Name of Inventor :**
1)ZINK Ronald Joseph
2)WADE Sarah Marie
3)GLAHN Tina Marie
4)WALTHER Rachel Eden
5)LAVON Gary Dean
6)GOYETTE Nicholas Paul
7)ISHIHARA Kaoru
8)BICKING Amanda Margaret
9)JURATOVAC Diana Woehnl

(57) Abstract :
An absorbent article comprises first and second substrates and one or more elastic elements disposed at least partially intermediate the substrates. The second substrate is attached to the first substrate and/or to portions of the elastic elements. The absorbent article comprises an adhesive having a first and second pattern of elements disposed on first substrate and first and second texture zones. The first texture zone comprises a first portion of the substrates a first portion of the elastic elements and the first pattern of elements of the adhesive and forms a background pattern in the first portion of the substrates. The second texture zone comprises a second portion of the substrates a second portion of the one or more elastic elements and the second pattern of elements of the adhesive and forms a macro pattern in the second portion of the substrates.

No. of Pages : 102 No. of Claims : 15

(12) PATENT APPLICATION PUBLICATION
(21) Application No.9013/DELNP/2014 A
(19) INDIA
(22) Date of filing of Application :28/10/2014
(43) Publication Date : 22/05/2015

(54) Title of the invention : COMPOUNDS FOR USE IN THE TREATMENT OF NEUROBLASTOMA EWING S SARCOMA OR RHABDOMYOSARCOMA

(51) International classification	:A61K31/427,A61K31/4439,A61K31/497
(31) Priority Document No	:61/618215
(32) Priority Date	:30/03/2012
(33) Name of priority country	:U.S.A.
(86) International Application No	:PCT/US2013/034214
Filing Date	:28/03/2013
(87) International Publication No	:WO 2013/148912
(61) Patent of Addition to Application Number	:NA
Filing Date	:NA
(62) Divisional to Application Number	:NA
Filing Date	:NA

(71)**Name of Applicant :**
1)NOVARTIS AG
Address of Applicant :Lichtstrasse 35 CH 4056 Basel Switzerland
(72)**Name of Inventor :**
1)HUANG Xizhong

(57) Abstract :
The present invention relates to a method of treating cancer selected from the group consisting of neuroblastoma, Ewings Sarcoma, or rhabdomyosarcoma comprising administering a therapeutically effective amount of a compound of formula (I), as defined herein, or a pharmaceutically acceptable salt thereof to a subject, preferably a human, in need thereof; to use of the compound of formula (I) or a pharmaceutically acceptable salt thereof for the manufacture of pharmaceutical compositions for use in the treatment of cancer selected from the group consisting of neuroblastoma, Ewings Sarcoma, or rhabdomyosarcoma; and to use of the compound of formula (I) or a pharmaceutically acceptable salt thereof in the treatment of cancer selected from the group consisting of neuroblastoma, Ewings Sarcoma, or rhabdomyosarcoma.

No. of Pages : 28 No. of Claims : 9

(12) PATENT APPLICATION PUBLICATION
(19) INDIA
(22) Date of filing of Application :24/10/2014
(21) Application No.8912/DELNP/2014 A
(43) Publication Date : 22/05/2015

(54) Title of the invention : COMPOSITION COMPRISING A BIOLOGICAL CONTROL AGENT AND A FUNGICIDE

(51) International classification :A01N63/00,A01N43/80,A01N43/78
(31) Priority Document No :12004160.3
(32) Priority Date :30/05/2012
(33) Name of priority country :EPO
(86) International Application No :PCT/EP2013/061021
Filing Date :29/05/2013
(87) International Publication No :WO 2013/178656
(61) Patent of Addition to Application Number :NA
Filing Date :NA
(62) Divisional to Application Number :NA
Filing Date :NA

(71)**Name of Applicant :**
1)BAYER CROPSCIENCE AG
Address of Applicant :Alfred Nobel Strasse 50 40789 Monheim Germany
(72)**Name of Inventor :**
1)WACHENDORFF NEUMANN Ulrike
2)ANDERSCH Wolfram
3)STENZEL Klaus
4)SPRINGER Bernd

(57) Abstract :
The present invention relates to a composition comprising at least one biological control agent selected from the group consisting of Bacillus chitinosporus AQ746 (NRRL Accession No, B-2161 8), Bacillus mycoides AQ726 (NRRL Accession No, B-21664), Bacillus pumilus (NRRL Accession No, B-30087), Bacillus pumilus AQ717 (NRRL Accession No, B-21662), Bacillus sp, AQ175 (ATCC Accession No. 55608), Bacillus sp, AQ177 (ATCC Accession No, 55609), Bacillus sp. AQ178 (ATCC Accession No, 53522), Bacillus subtilis AQ743 (NRRL Accession No, B-21665), Bacillus subtilis AQ713 (NRRL Accession No, B- 0 0 21661), Bacillus subtilis AQ153 (ATCC Accession No, 55614), Bacillus thuringiensis BD#32 (NRRL Accession No. B-21 530), Bacillus thuringiensis AQ52 (NRRL Accession No, B- 21619), Muscodor albus 620 (NRRL Accession No, 30547), Muscodor roseus A3-5 (NRRL Accession No. 30548), Rhodococcus globerulus AQ719 (NRRL Accession No. B-21663), Streptomyces galbus (NRRL Accession No. 30232), Streptomyces sp. (NRRL Accession No. B-30145), Bacillus thuringiensis subspec. kurstaki BMP ¾ 123, Bacillus subtilis AQ30002 (NRRL Accession No. B-50421), and Bacillus subtilis AQ 30004 (NRRL Accession No. B-50455) and/or a mutant of these strains having all the identifying characteristics of the respective strain, and/or a metabolite produced by the respective strain that exhibits activity against insects, mites, nematodes and/or phytopathogens and at least one fungicide (I) in a synergistically effective amount, Furthermore, the present invention relates to the use of this composition as well as a method for redu - cing overall damage of plants and plant parts.

No. of Pages : 91 No. of Claims : 15

(12) PATENT APPLICATION PUBLICATION
(21) Application No.8914/DELNP/2014 A
(19) INDIA
(22) Date of filing of Application :24/10/2014
(43) Publication Date : 22/05/2015

(54) Title of the invention : APPARATUS FOR MEASURING OF CONTENTS IN EXHAUST GASES

(51) International classification :F01N13/00,G01N1/22
(31) Priority Document No :12504478
(32) Priority Date :04/05/2012
(33) Name of priority country :Sweden
(86) International Application No :PCT/SE2013/050376
Filing Date :08/04/2013
(87) International Publication No :WO 2013/165296
(61) Patent of Addition to Application Number :NA
Filing Date :NA
(62) Divisional to Application Number :NA
Filing Date :NA

(71)**Name of Applicant :**
1)SCANIA CV AB
Address of Applicant :S 151 87 Sdertlje Sweden
(72)**Name of Inventor :**
1)MACKALDENER Magnus

(57) Abstract :
A device (2) adapted to being used for sampling in the context of measuring the content of the exhaust gases in an exhaust flow (4) in an exhaust line (6) from a combustion engine comprises a sensor (8) situated in a measuring chamber (10). The device (2) further comprises at least two gathering tubes (12) situated in the exhaust pipe (6) and provided with apertures (14) which face towards the exhaust flow (4) and are situated in a plane (C,C) which is substantially perpendicular to the direction of the exhaust flow (4). The gathering tubes (12) are adapted to diverting various parts of the exhaust flow to the measuring chamber (10) to make it possible for the sensor (8) to monitor a mean value representing for example the NOx content of the exhaust gases. With a representative mean value for the NOx content of the exhaust gases an exhaust cleaning system based on SCR technology can be regulated with good accuracy.

No. of Pages : 14 No. of Claims : 8

(12) PATENT APPLICATION PUBLICATION
(19) INDIA
(22) Date of filing of Application :29/10/2014
(21) Application No.9029/DELNP/2014 A
(43) Publication Date : 22/05/2015

(54) Title of the invention : METHOD FOR THE TREATMENT OF SILICON CARBIDE FIBRES

(51) International classification :C04B35/80,C04B41/91,C23C16/02
(31) Priority Document No :1253426
(32) Priority Date :13/04/2012
(33) Name of priority country :France
(86) International Application No :PCT/FR2013/050788
Filing Date :11/04/2013
(87) International Publication No :WO 2013/153336
(61) Patent of Addition to Application Number :NA
Filing Date :NA
(62) Divisional to Application Number :NA
Filing Date :NA

(71)**Name of Applicant :**
1)HERAKLES
Address of Applicant :Les Cinq Chemins Rue de Touban F 33185 Le Haillan France
(72)**Name of Inventor :**
1)LOISON Sylvie
2)LAQUET Jean Luc
3)ROCHER Jean Philippe

(57) Abstract :
The invention relates to a method for the treatment of silicon carbide fibres comprising a step involving the chemical treatment of fibres with an aqueous acid solution containing hydrofluoric acid and nitric acid but free of acetic acid in order to remove the silica present on the surface of fibres and to form a layer of microporous carbon. The invention also relates to a method for the production of a fibrous preform comprising the formation of a fibrous structure comprising treated silicon carbide fibres and the use of said preform for the production of a part made from composite material.

No. of Pages : 16 No. of Claims : 12

(12) PATENT APPLICATION PUBLICATION
(19) INDIA
(22) Date of filing of Application :24/10/2014
(21) Application No.8908/DELNP/2014 A
(43) Publication Date : 22/05/2015

(54) Title of the invention : A CORE TRAY

(51) International classification :E21B25/00
(31) Priority Document No :2012901218
(32) Priority Date :26/03/2012
(33) Name of priority country :Australia
(86) International Application No :PCT/AU2013/000304
Filing Date :26/03/2013
(87) International Publication No :WO 2013/142899
(61) Patent of Addition to Application Number :NA
Filing Date :NA
(62) Divisional to Application Number :NA
Filing Date :NA

(71)**Name of Applicant :**
1)PROSPECTORS IP HOLDINGS PTY LIMITED
Address of Applicant :7/22 Lexington Drive Bella Vista New South Wales 2153 Australia
(72)**Name of Inventor :**
1)KEAST Robert Mark

(57) Abstract :
A core tray comprising a body including at least one channel arranged to hold at least one core sample wherein the body includes at least one set of handles arranged to in use allow a user to grip the core tray to assist in moving the core tray.

No. of Pages : 52 No. of Claims : 15

(12) PATENT APPLICATION PUBLICATION
(19) INDIA
(22) Date of filing of Application :24/10/2014
(21) Application No.8909/DELNP/2014 A
(43) Publication Date : 22/05/2015

(54) Title of the invention : NOVEL COMPOSITION FOR PREPARING POLYSACCHARIDE FIBERS

(51) International classification :C08B37/00,C08L5/00,D01D5/06
(31) Priority Document No :13/479990
(32) Priority Date :24/05/2012
(33) Name of priority country :U.S.A.
(86) International Application No :PCT/US2013/042329
Filing Date :23/05/2013
(87) International Publication No :WO 2013/177348
(61) Patent of Addition to Application Number :NA
Filing Date :NA
(62) Divisional to Application Number :NA
Filing Date :NA

(71)**Name of Applicant :**
1)E. I. DU PONT DE NEMOURS AND COMPANY
Address of Applicant :1007 Market Street Wilmington Delaware 19898 U.S.A.
(72)**Name of Inventor :**
1)OBRIEN John P.

(57) Abstract :
Solutions formed by combining poly(a(l→3) glucan) with CS2 in aqueous alkali metal hydroxide solution have been shown to produce the xanthated form of the poly(a(l→3) glucan). The solutions so formed have been shown to be useful for solu tion spinning into fiber of poly(a(l→3) glucan) when the spun fiber is coagulated in an acidic coagulation bath. The fibers so pro duced exhibit desirable physical properties. The poly(a(l→3) glucan) employed was synthesized by fermentation.

No. of Pages : 33 No. of Claims : 14

(12) PATENT APPLICATION PUBLICATION
(21) Application No.9035/DELNP/2014 A
(19) INDIA
(22) Date of filing of Application :29/10/2014
(43) Publication Date : 22/05/2015

(54) Title of the invention : A COOLANT BRIDGING LINE FOR A GAS TURBINE WHICH COOLANT BRIDGING LINE CAN BE INSERTED INTO A HOLLOW COOLED TURBINE BLADE

(51) International classification :F01D9/06
(31) Priority Document No :10 2012 209 549.7
(32) Priority Date :06/06/2012
(33) Name of priority country :Germany
(86) International Application No :PCT/EP2013/059859
Filing Date :14/05/2013
(87) International Publication No :WO 2013/182381
(61) Patent of Addition to Application Number :NA
Filing Date :NA
(62) Divisional to Application Number :NA
Filing Date :NA

(71)**Name of Applicant :**
1)SIEMENS AKTIENGESELLSCHAFT
Address of Applicant :Wittelsbacherplatz 2 80333 M¼nchen Germany
(72)**Name of Inventor :**
1)AHMAD Fathi

(57) Abstract :
A coolant bridging line (1) for a gas turbine (101) having inner and outer sides (4,6) which are separated by a wall (2) wherein the coolant bridging line (1) extends from a first component of the gas turbine (101) to a second component of the gas turbine (101) is to make a further increase in the service life of the components of the gas turbine possible with a degree of efficiency which is nevertheless as high as possible. To this end the coolant bridging line (1) has means (8,12) which change the heat transfer between and/or the flow conditions on the inner and outer sides (4,6).

No. of Pages : 19 No. of Claims : 15

(12) PATENT APPLICATION PUBLICATION
(19) INDIA
(22) Date of filing of Application :29/10/2014
(21) Application No.9036/DELNP/2014 A
(43) Publication Date : 22/05/2015

(54) Title of the invention : METHOD AND DEVICE FOR REGULATING A VOLTAGE IN A DISTRIBUTION NETWORK

(51) International classification :H02J3/16,H02J3/18,H02J3/50
(31) Priority Document No :10 2012 211 267.7
(32) Priority Date :29/06/2012
(33) Name of priority country :Germany
(86) International Application No :PCT/EP2013/061950
Filing Date :11/06/2013
(87) International Publication No :WO 2014/001073
(61) Patent of Addition to Application Number :NA
Filing Date :NA
(62) Divisional to Application Number :NA
Filing Date :NA

(71)**Name of Applicant :**
1)SIEMENS AKTIENGESELLSCHAFT
Address of Applicant :Wittelsbacherplatz 2 80333 M¼nchen Germany
(72)**Name of Inventor :**
1)BUHL Michael Bernhard
2)BAMBERGER Joachim
3)METZGER Michael
4)SOLLACHER Rudolf

(57) Abstract :
The invention relates to a method for regulating a voltage (U) in a distribution network (VN) that supplies nodes (KN) with voltage via mains power lines (NL). In said method a node (KN) which recognizes that the local voltage of the distribution network (VN) present at said node lies above or below a permissible supply voltage range switches from slave mode (SB) to master mode (MB) and in said master mode (MB) regulates the local voltage (U) that is present by drawing or supplying reactive power (Q) in order to reach the permissible supply voltage range. The node (KN) then indicates this to other nodes (KN) of the distribution network (VN) that are in slave mode (SB) by modulating an indication signal pattern (ASM) onto the reactive power (Q) being drawn or supplied by said node the signal pattern having a signal parameter which is proportional to the amplitude of the reactive power (Q) that is drawn or supplied by said node (KN).

No. of Pages : 38 No. of Claims : 15

(12) PATENT APPLICATION PUBLICATION
(19) INDIA
(22) Date of filing of Application :29/10/2014
(21) Application No.9038/DELNP/2014 A
(43) Publication Date : 22/05/2015

(54) Title of the invention : PROCESS FOR PRODUCTION OF XYLENES THROUGH INTEGRATION OF METHYLATION AND TRANSALKYLATION

(51) International classification :C07C5/22
(31) Priority Document No :61/620830
(32) Priority Date :05/04/2012
(33) Name of priority country :U.S.A.
(86) International Application No :PCT/US2013/031148
Filing Date :14/03/2013
(87) International Publication No :WO 2013/151710
(61) Patent of Addition to Application Number :NA
Filing Date :NA
(62) Divisional to Application Number :NA
Filing Date :NA

(71)**Name of Applicant :**
1)GTC TECHNOLOGY US LLC
Address of Applicant :1001 S. Dairy Ashford Suite 500 Houston TX 77077 U.S.A.
(72)**Name of Inventor :**
1)DING Zhongyi
2)JIN Weihua
3)GENTRY Joseph C.
4)CRETOIU Mircea

(57) Abstract :
The inventive process is directed to the production of xylenes through integration of aromatics methylation and transalkylation. This integrated process maximizes the production of xylenes and eliminates or minimizes the production of benzene.

No. of Pages : 14 No. of Claims : 12

(12) PATENT APPLICATION PUBLICATION
(19) INDIA
(22) Date of filing of Application :29/10/2014
(21) Application No.9040/DELNP/2014 A
(43) Publication Date : 22/05/2015

(54) Title of the invention : IMPLANTABLE UROLOGICAL DEVICE WITH IMPROVED RETRIEVAL FEATURE

(51) International classification :A61K9/00,A61M25/00,A61M27/00
(31) Priority Document No :61/649253
(32) Priority Date :19/05/2012
(33) Name of priority country :U.S.A.
(86) International Application No :PCT/US2013/041877
Filing Date :20/05/2013
(87) International Publication No :WO 2013/177068
(61) Patent of Addition to Application Number :NA
Filing Date :NA
(62) Divisional to Application Number :NA
Filing Date :NA

(71)**Name of Applicant :**
1)TARIS BIOMEDICAL LLC
Address of Applicant :99 Hayden Avenue Suite 100 Lexington MA 02421 U.S.A.
(72)**Name of Inventor :**
1)LEE Heejin
2)HO DUC Hong Linh

(57) Abstract :
A urological medical device having a retrieval string is provided. The retrieval string has a proximal end connected the device and an opposed distal end. In a first embodiment the retrieval string is configured in an initial confined form which following a period of deployment in a patient s bladder changes to an unconfined form in which the distal end of the retrieval string is extendible into the urethra to enable extraction of the device from bladder by pulling the retrieval string. The device may include a bioerodible component which permits the retrieval string to take the unconfined form following degradation of the bioerodible component in vivo. In another embodiment the retrieval string includes a ferromagnetic material which can be magnetically captured to facilitate removal of the device from the bladder. The ferromagnetic retrieval string may be buoyant in urine.

No. of Pages : 35 No. of Claims : 32

(12) PATENT APPLICATION PUBLICATION
(19) INDIA
(22) Date of filing of Application :28/10/2014
(21) Application No.9023/DELNP/2014 A
(43) Publication Date : 22/05/2015

(54) Title of the invention : FUEL INJECTOR WITH PURGED INSULATING AIR CAVITY

(51) International classification :F02C7/22,F02C7/232,F02C9/26
(31) Priority Document No :61/639013
(32) Priority Date :26/04/2012
(33) Name of priority country :U.S.A.
(86) International Application No:PCT/US2013/038500
Filing Date :26/04/2013
(87) International Publication No :WO 2013/163604
(61) Patent of Addition to Application Number :NA
Filing Date :NA
(62) Divisional to Application Number :NA
Filing Date :NA

(71)**Name of Applicant :**
1)SOLAR TURBINES INCORPORATED
Address of Applicant :2200 Pacific Highway San Diego CA 92186 5376 U.S.A.
(72)**Name of Inventor :**
1)TWARDOCHLEB Christopher Zdzislaw
2)DUCKERS Jonathan Gerrard

(57) Abstract :
A fuel injector (30) includes a flow path for fuel air mixture to a combustor (50) extending longitudinally through the fuel injector. The fuel injector may also include a liquid fuel gallery (56) at least partially encircling the flow path. The gallery may include a plurality of fuel spokes (54a,54e) configured to deliver liquid fuel from the gallery to the flow path. The fuel injector may also include an annular outer housing (47) circumferentially positioned about the gallery to form an insulating air cavity (60) at least partially around the gallery. The outer housing may include at least one purge hole (62a,62b,62c) to provide communication between the insulating air cavity and outside the outer housing of the injector.

No. of Pages : 20 No. of Claims : 10

(12) PATENT APPLICATION PUBLICATION
(19) INDIA
(22) Date of filing of Application :28/10/2014
(21) Application No.9024/DELNP/2014 A
(43) Publication Date : 22/05/2015

(54) Title of the invention : METHOD FOR THE PRODUCTION OF A HOLLOW METAL PART BY MEANS OF CASTING

(51) International classification :B22C9/10
(31) Priority Document No :1253486
(32) Priority Date :16/04/2012
(33) Name of priority country :France
(86) International Application No :PCT/FR2013/050792
Filing Date :11/04/2013
(87) International Publication No :WO 2013/156713
(61) Patent of Addition to Application Number :NA
Filing Date :NA
(62) Divisional to Application Number :NA
Filing Date :NA

(71)**Name of Applicant :**
1)C.T.I.F. CENTRE TECHNIQUE DES INDUSTRIES DE LA FONDERIE
Address of Applicant :44 avenue de la Division Leclerc F 92310 S¨vres France
(72)**Name of Inventor :**
1)LONGA Yves
2)DE RUFFRAY Jean

(57) Abstract :
The invention relates to a method for the production of a hollow metal part by means of casting said method comprising the following steps of: providing a destructible core (20) having a body (22) made from aggregates and an outer shell (40) which surrounds the body (22) and is adhered thereto; placing the core (20) in a mould (50); melting and injecting liquid metal generally under pressure into the mould (50) around the core said core (20) forming an inner space in the part; after solidification of the part disaggregating the body and removing same through outlets provided in the outer shell and the part; and destroying the outer shell and removing same through outlets provided in the part.

No. of Pages : 17 No. of Claims : 11

(12) PATENT APPLICATION PUBLICATION
(19) INDIA
(22) Date of filing of Application :28/10/2014
(21) Application No.9026/DELNP/2014 A
(43) Publication Date : 22/05/2015

(54) Title of the invention : PREPARATION OF NEW INTERMEDIATE OF HEPARIN PENTASACCHARIDE AND PREPARATION METHOD THEREOF

(51) International classification :C07H15/18,C07H15/04,C07H1/00
(31) Priority Document No :201210102415.0
(32) Priority Date :02/04/2012
(33) Name of priority country :China
(86) International Application No :PCT/CN2013/073601
Filing Date :02/04/2013
(87) International Publication No :WO 2013/149576
(61) Patent of Addition to Application Number :NA
Filing Date :NA
(62) Divisional to Application Number :NA
Filing Date :NA

(71)**Name of Applicant :**
1)ZHEJIANG HISUN PHARMACEUTICAL CO. LTD.
Address of Applicant :No.46 Waisha Road Jiaojiang District Taizhou Zhejiang 318000 China
(72)**Name of Inventor :**
1)GUO Yanghui
2)WEI Hegeng
3)BAI Hua
4)WU Yingqiu
5)ZHANG Yue
6)ZHOU Junhui
7)DING Yili
8)BAI Lingwei
9)YANG Shibao

(57) Abstract :
The present invention relates to a process of a chemically synthetic drug and in particular to a new intermediate of a heparin pentasaccharide and a preparation method thereof. The process has high reaction efficiency and an easy reaction operation. The reaction intermediate is easy to be purified and is appropriate for an industrialization production.

No. of Pages : 32 No. of Claims : 18

(12) PATENT APPLICATION PUBLICATION
(21) Application No.9028/DELNP/2014 A
(19) INDIA
(22) Date of filing of Application :28/10/2014
(43) Publication Date : 22/05/2015

(54) Title of the invention : IMPROVED METHOD AND APPARATUS FOR ROTATING SLEEVE ENGINE HYDRODYNAMIC SEAL

(51) International classification :F01B15/00
(31) Priority Document No :61/620395
(32) Priority Date :04/04/2012
(33) Name of priority country :U.S.A.
(86) International Application No :PCT/US2013/035306
Filing Date :04/04/2013
(87) International Publication No :WO 2013/152214
(61) Patent of Addition to Application Number :NA
Filing Date :NA
(62) Divisional to Application Number :NA
Filing Date :NA

(71)**Name of Applicant :**
1)ROTATING SLEEVE ENGINE TECHNOLOGIES INC.
Address of Applicant :2408 Longview #105 Austin TX 78705 U.S.A.
(72)**Name of Inventor :**
1)DARDALIS Dimitrios

(57) Abstract :
An improved sealing system for a poppet valve rotating sleeve internal combustion engine with rotating liners. A hydrodynamic face seal assembly includes a spring pre load assembly provides a uniform loading to a primary sealing ring. A secondary seal is provided between the primary sealing ring and the cylinder head. Hydrodynamic face seal features are provided either on the mating face of the primary sealing ring or on the annular face of the rotating liner. The hydrodynamic face seal features include an inner sealing zone and an outer loading zone with a plurality of hydrodynamic lift pads and dam features which create converging surfaces. A lubricant is provided to the annular face of the rotating liner so that a lubricant layer can be maintained between the primary sealing ring mating face and the rotating liner.

No. of Pages : 24 No. of Claims : 18

(12) PATENT APPLICATION PUBLICATION
(19) INDIA
(22) Date of filing of Application :29/10/2014
(21) Application No.9049/DELNP/2014 A
(43) Publication Date : 22/05/2015

(54) Title of the invention : MEASURING THE JIB LENGTH OF A CRANE USING TRANSIT TIME MEASUREMENT

(51) International classification :B66C13/46,B66C23/90,G01S13/88
(31) Priority Document No :10 2012 208 635.8
(32) Priority Date :23/05/2012
(33) Name of priority country :Germany
(86) International Application No :PCT/EP2013/059381
Filing Date :06/05/2013
(87) International Publication No :WO 2013/174642
(61) Patent of Addition to Application Number :NA
Filing Date :NA
(62) Divisional to Application Number :NA
Filing Date :NA

(71)**Name of Applicant :**
1)HIRSCHMANN AUTOMATION AND CONTROL GMBH
Address of Applicant :Stuttgarter Strae 45 51 72654 Neckartenzlingen Germany
(72)**Name of Inventor :**
1)TORDY Robert

(57) Abstract :
Method for determining the overall length (GL) of a jib (1,4) of a crane in a wear free manner characterized in that a signal is coupled in at a first point (2,5) of the jib (1,4) and is coupled out at a second point (3,6) of the jib (1,4) the overall length (GL) being determined from the time required for the signal to go from the first point (2,5) to the second point (3,6).

No. of Pages : 12 No. of Claims : 7

(12) PATENT APPLICATION PUBLICATION
(21) Application No.8926/DELNP/2014 A
(19) INDIA
(22) Date of filing of Application :24/10/2014
(43) Publication Date : 22/05/2015

(54) Title of the invention : SPHERICAL CONTAINER ALLOWING RAPID EXTRACTION

(51) International classification :A47J31/44
(31) Priority Document No :201210081572.8
(32) Priority Date :26/03/2012
(33) Name of priority country :China
(86) International Application No :PCT/CN2012/000793
Filing Date :11/06/2012
(87) International Publication No :WO 2013/143039
(61) Patent of Addition to Application Number :NA
Filing Date :NA
(62) Divisional to Application Number :NA
Filing Date :NA

(71)**Name of Applicant :**
1)CHEN Xiuxing
Address of Applicant :Unit 20G No.831 Xinzha Road Jingan District Shanghai 200041 China
(72)**Name of Inventor :**
1)CHEN Xiuxing

(57) Abstract :
A spherical container allowing rapid extraction comprising an upper housing body (11) a lower housing body (12) a filter (3) and a connecting piece (4). The upper housing body (11) and the lower housing body (12) are made of a hard material that is easily penetrable. The connecting piece (4) the upper housing body (11) and the lower housing body (12) form a sealed spherical cavity (2). The filter (3) is fixed within a cavity of the connecting piece (4). The upper surface and the lower surface of the connecting piece (4) respectively are inwardly indented to form an upper engaging groove (41) and a lower engaging groove (42) that are closed and annular. The upper housing body (11) and the lower housing body (12) respectively have formed at opening positions thereof an upper engaging part (111) and a lower engaging part (121) that fit tightly with the upper engaging groove (41) and the lower engaging groove (42). The outer walls of the upper engaging part (111) and of the lower engaging part (121) respectively are inwardly indented to form multiple upper grooves (1111) and lower grooves (1211). The connecting piece has formed respectively at positions corresponding to the upper grooves (1111) and the lower grooves (1211) fitting tightly thereto upper hooks (43) and lower hooks (44). The inner wall of the connecting piece (4) extends respectively towards two directions upward and downward to form buffer plates (5) that fit tightly respectively with the inner walls of the upper housing body (11) and of the lower housing body (12). The spherical container facilitates storage and extraction and provides great extraction effect.

No. of Pages : 12 No. of Claims : 10

(12) PATENT APPLICATION PUBLICATION
(19) INDIA
(22) Date of filing of Application :24/10/2014
(21) Application No.8927/DELNP/2014 A
(43) Publication Date : 22/05/2015

(54) Title of the invention : SCHMALLENBERG VIRUS (SBV) VACCINE METHODS OF PRODUCTION AND USES THEREOF

(51) International classification :C07K14/175,A61K39/12
(31) Priority Document No :12170631.1
(32) Priority Date :01/06/2012
(33) Name of priority country :EPO
(86) International Application No :PCT/US2013/043146
Filing Date :29/05/2013
(87) International Publication No :WO 2013/181270
(61) Patent of Addition to Application Number :NA
Filing Date :NA
(62) Divisional to Application Number :NA
Filing Date :NA

(71)**Name of Applicant :**
1)BOEHRINGER INGELHEIM VETMEDICA GMBH
Address of Applicant :Binger Strasse 173 55216 Ingelheim am Rhein Germany
(72)**Name of Inventor :**
1)NIKOLIN Veljko
2)STADLER Konrad
3)LISCHEWSKI Axel
4)BRIX Alexander
5)KNITTEL Jeffrey P.
6)TOEPFER Katharina Hedwig

(57) Abstract :
The present invention relates to the field of vaccines and medicaments for the prophylaxis and treatment of infectious diseases in ruminants. In particular it relates to inactivated Schmallenberg virus (SBV) useful as vaccine or medicament for preventing or treating viremia the transmission and clinical symptoms in particular malformations in newborn ruminants such as cattle sheep and goats induced by SBV.

No. of Pages : 58 No. of Claims : 53

(12) PATENT APPLICATION PUBLICATION
(21) Application No.9054/DELNP/2014 A
(19) INDIA
(22) Date of filing of Application :29/10/2014
(43) Publication Date : 22/05/2015

(54) Title of the invention : FLUID TRANSFER DEVICES HAVING CARTRIDGE PORT WITH CARTRIDGE EJECTION ARRANGEMENT

(51) International classification :A61J1/20
(31) Priority Document No :219065
(32) Priority Date :05/04/2012
(33) Name of priority country :Israel
(86) International Application No :PCT/IL2013/050313
Filing Date :07/04/2013
(87) International Publication No :WO 2013/150538
(61) Patent of Addition to Application Number :NA
Filing Date :NA
(62) Divisional to Application Number :NA
Filing Date :NA

(71)**Name of Applicant :**
1)MEDIMOP MEDICAL PROJECTS LTD
Address of Applicant :17 Hatidhar Street POBox 2499 43665 Raanana Israel
(72)**Name of Inventor :**
1)LEV Nimrod
2)BEN SHALOM Niv

(57) Abstract :
Fluid transfer devices for use in manual cartridge filling procedures for filling cartridges with liquid drug dosages from medicament containing vials. The fluid transfer devices include a double ended main body having a longitudinal axis a vial port for telescopic receiving a drug vial and a cartridge port for slidingly receiving a leading cartridge end. The cartridge port includes a cartridge securing arrangement for releasably securing a leading cartridge end therein and a cartridge ejection arrangement for at least partially ejecting a cartridge therefrom for assisting manual sliding ejection of a filled cartridge. The cartridge port can include either a combined cartridge securing and ejection arrangement or a discrete cartridge securing arrangement and a discrete cartridge ejection arrangement.

No. of Pages : 28 No. of Claims : 7

(12) PATENT APPLICATION PUBLICATION
(19) INDIA
(22) Date of filing of Application :29/10/2014
(21) Application No.9055/DELNP/2014 A
(43) Publication Date : 22/05/2015

(54) Title of the invention : METHOD AND DEVICE FOR INTRODUCING FINE PARTICLE SHAPED MATERIAL INTO THE FLUIDISED BED OF A FLUIDISED BED REDUCTION UNIT

(51) International classification :C21B7/00,C21B7/22,C21B13/00
(31) Priority Document No :12168157.1
(32) Priority Date :16/05/2012
(33) Name of priority country :EPO
(86) International Application No :PCT/EP2013/057121
Filing Date :04/04/2013
(87) International Publication No :WO 2013/171001
(61) Patent of Addition to Application Number :NA
Filing Date :NA
(62) Divisional to Application Number :NA
Filing Date :NA

(71)**Name of Applicant :**
1)SIEMENS VAI METALS TECHNOLOGIES GMBH
Address of Applicant :Turmstrae 44 A 4031 Linz Austria
(72)**Name of Inventor :**
1)HAUZENBERGER Franz
2)MILLNER Robert
3)PLAUL Jan Friedemann
4)REIN Norbert

(57) Abstract :
The invention relates to a method and a device for introducing fine particle shaped material (4) comprising ferritic particles into an fluidised bed reduction unit (1) having an fluidised bed (24) wherein the temperature in the fluidised bed (24) is greater than 300°C preferably greater than 400°C particularly preferably greater than 500°C and less than 900°C preferably less than 850°C particularly preferably less than 800°C and wherein the fine particle shaped material (4) is introduced directly into the fluidised bed (24) and/or in a free space (25) above the fluidised bed (24) by means of a burner (2). The invention further relates to the use of the method according to the invention for producing liquid pig iron (17) or liquid steel pre products (18) by means of a melt reduction process in a melt reduction unit (22).

No. of Pages : 46 No. of Claims : 22

(12) PATENT APPLICATION PUBLICATION
(19) INDIA
(22) Date of filing of Application :28/10/2014
(21) Application No.9014/DELNP/2014 A
(43) Publication Date : 22/05/2015

(54) Title of the invention : SYSTEM FOR MEASURING SOFT STARTER CURRENT AND METHOD OF MAKING SAME

(51) International classification :H02P1/42,H03K17/18,H03K17/72
(31) Priority Document No :13/535522
(32) Priority Date :28/06/2012
(33) Name of priority country :U.S.A.
(86) International Application No :PCT/US2013/046232
Filing Date :18/06/2013
(87) International Publication No :WO 2014/004158
(61) Patent of Addition to Application Number :NA
Filing Date :NA
(62) Divisional to Application Number :NA
Filing Date :NA

(71)**Name of Applicant :**
1)EATON CORPORATION
Address of Applicant :1000 Eaton Boulevard Cleveland OH 44122 U.S.A.
(72)**Name of Inventor :**
1)WOODLEY Kaijam M.

(57) Abstract :
A system for measuring soft starter current includes a current monitoring system including a controller and a current transfer device that includes a first thyristor and a first conductor coupled to the first thyristor and configured to convey a first current flowing through the first thyristor wherein the first current comprises current flowing through the first thyristor when the first thyristor is in an off state. The system also comprises a first current sensor configured to sense the first current and a first current measurement circuit coupled to the first current sensor and coupleable to the controller and configured to output a first output value to the controller representative of the first current flowing through the first thyristor. The controller is configured to determine an impending inoperability of the first thyristor based on the first current and alert a user if the first current indicates the impending inoperability.

No. of Pages : 23 No. of Claims : 20

(12) PATENT APPLICATION PUBLICATION
(19) INDIA
(22) Date of filing of Application :29/10/2014
(21) Application No.9061/DELNP/2014 A
(43) Publication Date : 22/05/2015

(54) Title of the invention : POROUS MEDIUM SCREEN

(51) International classification :B01D39/14,B01D39/00,C08J9/00
(31) Priority Document No :NA
(32) Priority Date :NA
(33) Name of priority country :NA
(86) International Application No :PCT/US2012/039841
Filing Date :29/05/2012
(87) International Publication No :WO 2013/180689
(61) Patent of Addition to Application Number :NA
Filing Date :NA
(62) Divisional to Application Number :NA
Filing Date :NA

(71)**Name of Applicant :**
1)HALLIBURTON ENERGY SERVICES INC.
Address of Applicant :10200 Bellaire Boulevard Houston Texas 77072 U.S.A.
(72)**Name of Inventor :**
1)LOPEZ Jean Marc
2)ZHAO Liang
3)HOLDERMAN Luke William

(57) Abstract :
Certain aspects and embodiments of the present invention are directed to a porous medium screen that can be disposed in a wellbore through a fluid producing formation. The porous medium screen can include a porous medium and a retaining structure. The porous medium can be a material having one or more pores. The one or more pores can be adapted to allow a fluid to flow through the porous medium and to prevent one or more particles from flowing through the porous medium. The retaining structure can be adapted to retain the porous medium in a position circumferentially surrounding a section of a tubing string and to prevent expansion of the porous medium. The retaining structure can include a shroud and one or more stoppers. The shroud can be adapted to circumferentially surround the porous medium. Each stopper can be adapted to circumferentially surround the section of a tubing string at an edge of the porous medium.

No. of Pages : 31 No. of Claims : 20

(12) PATENT APPLICATION PUBLICATION
(19) INDIA
(22) Date of filing of Application :29/10/2014
(21) Application No.9064/DELNP/2014 A
(43) Publication Date : 22/05/2015

(54) Title of the invention : ADAPTABLE ROTATING ARC WELDING METHOD AND SYSTEM

(51) International classification	:B23K9/02,B23K9/095,B23K31/00
(31) Priority Document No	:61/676563
(32) Priority Date	:27/07/2012
(33) Name of priority country	:U.S.A.
(86) International Application No	:PCT/US2013/052356
Filing Date	:26/07/2013
(87) International Publication No	:WO 2014/035577
(61) Patent of Addition to Application Number	:NA
Filing Date	:NA
(62) Divisional to Application Number	:NA
Filing Date	:NA

(71)**Name of Applicant :**
1)ILLINOIS TOOL WORKS INC.
Address of Applicant :155 Harlem Avenue Glenview Illinois 60025 U.S.A.
(72)**Name of Inventor :**
1)PANELLI Edward J.

(57) Abstract :
A welding operation is performed utilizing a rotating arc resulting from movement of a welding electrode (14) in a welding torch (24). Workpiece fit up is determined as the weld progresses such as via a camera (134) and image analysis (138). In the event that fit up changes such as by the development of gaps (118) between the workpieces one or more parameters of the system may be altered such as the geometry of the electrode movement the travel speed the wire feed speed the weld power applied to the electrode and so forth. The technique may be automated such as for accommodating welding via welding robots (132).

No. of Pages : 23 No. of Claims : 20

(12) PATENT APPLICATION PUBLICATION
(21) Application No.9065/DELNP/2014 A
(19) INDIA
(22) Date of filing of Application :29/10/2014
(43) Publication Date : 22/05/2015

(54) Title of the invention : FLUOROPOLYMER COMPOSITIONS

(51) International classification	:C08L27/12,C08K5/20,C08K5/43	(71)**Name of Applicant :**
(31) Priority Document No	:NA	**1)RHODIA OPERATIONS**
(32) Priority Date	:NA	Address of Applicant :25 rue de Clichy F 75009 Paris France
(33) Name of priority country	:NA	(72)**Name of Inventor :**
(86) International Application No	:PCT/CN2012/074101	**1)CHENG Shujing**
Filing Date	:16/04/2012	**2)BOURDETTE Arnaud**
(87) International Publication No	:WO 2013/155659	
(61) Patent of Addition to Application Number	:NA	
Filing Date	:NA	
(62) Divisional to Application Number	:NA	
Filing Date	:NA	

(57) Abstract :
The present invention relates to a composition for solubilizing a fluoropolymer comprising a solvent blend of a) Compound of formula (I) R1 C(=0)NR2R3 wherein R1 and R2 and R3 are defined as in the specification and b) DiMethylSulfoxide {DMSO). The invention also relates to the process for the preparation of the composition and its uses. The invention is also of use the fluoropolymer composition for coating applications.

No. of Pages : 25 No. of Claims : 19

(12) PATENT APPLICATION PUBLICATION
(19) INDIA
(22) Date of filing of Application :29/10/2014
(21) Application No.9066/DELNP/2014 A
(43) Publication Date : 22/05/2015

(54) Title of the invention : PROCESS FOR TREATING BIOMASS

(51) International classification :C12P19/00,D21C1/02,D21C1/06
(31) Priority Document No :13/458568
(32) Priority Date :27/04/2012
(33) Name of priority country :U.S.A.
(86) International Application No :PCT/US2013/037935
Filing Date :24/04/2013
(87) International Publication No :WO 2013/163271
(61) Patent of Addition to Application Number :NA
Filing Date :NA
(62) Divisional to Application Number :NA
Filing Date :NA

(71)**Name of Applicant :**
1)MICHIGAN BIOTECHNOLOGY INSTITUTE
Address of Applicant :3900 Collins Road Lansing MI 48910 U.S.A.
(72)**Name of Inventor :**
1)TEYMOURI Farzaneh
2)CAMPBELL Timothy J.

(57) Abstract :
THIS INVENTION IS DIRECTED TO A PROCESS FOR TREATING BIOMASS. THE BIOMASS IS TREATED WITH A BIOMASS SWELLING AGENT WITHIN THE VESSEL TO SWELL OR RUPTURE AT LEAST A PORTION OF THE BIOMASS. A PORTION OF THE SWELLING AGENT IS REMOVED FROM A FIRST END OF THE VESSEL FOLLOWING THE TREATMENT. THEN STEAM IS INTRODUCED INTO A SECOND END OF THE VESSEL DIFFERENT FROM THE FIRST END TO FURTHER REMOVE SWELLING AGENT FROM THE VESSEL IN SUCH A MANNER THAT THE SWELLING AGENT EXITS THE VESSEL AT A RELATIVELY LOW WATER CONTENT.

No. of Pages : 24 No. of Claims : 20

(12) PATENT APPLICATION PUBLICATION
(21) Application No.8951/DELNP/2014 A
(19) INDIA
(22) Date of filing of Application :27/10/2014
(43) Publication Date : 22/05/2015

(54) Title of the invention : LASER ETCHING A STACK OF THIN LAYERS FOR A CONNECTION OF A PHOTOVOLTAIC CELL

(51) International classification :H01L27/142
(31) Priority Document No :1254088
(32) Priority Date :03/05/2012
(33) Name of priority country :France
(86) International Application No :PCT/FR2013/050174
Filing Date :28/01/2013
(87) International Publication No :WO 2013/164523
(61) Patent of Addition to Application Number :NA
Filing Date :NA
(62) Divisional to Application Number :NA
Filing Date :NA

(71)**Name of Applicant :**
1)NEXCIS
Address of Applicant :190 Avenue Clestin Coq Zone Industrielle F 13106 Rousset France
(72)**Name of Inventor :**
1)Dunne Brendan

(57) Abstract :
The invention concerns a treatment of thin layers (CIGS Mo) with a view to forming a connection of a photovoltaic cell (C1,C2) comprising said thin layers which comprise at least: a first layer (CIGS) having photovoltaic properties deposited on a second layer (Mo) and said second layer a metal contact layer deposited on a substrate (SUB). The following steps in particular are carried out: etching into said first layer (CIGS) at least one first trench having a first width (L1) so as to expose the second layer (Mo); and etching in said first trench a second trench so as to expose the substrate the second trench having a second width (L2) less than the first width (L1). The etching of the first and second trenches is moreover carried out by laser shots during a single overall etching step the method being characterised in that said overall etching step comprises: a fine etching operation close to fronts (FR1,FR2) intended to delimit the first trench; and a rough etching operation between the first and second fronts.

No. of Pages : 37 No. of Claims : 19

(12) PATENT APPLICATION PUBLICATION
(19) INDIA
(22) Date of filing of Application :30/10/2014
(21) Application No.9072/DELNP/2014 A
(43) Publication Date : 22/05/2015

(54) Title of the invention : MIXOTROPHIC METHOD OF AQUACULTURE

(51) International classification :A01K61/00,A01K67/00,A23K1/16
(31) Priority Document No :NA
(32) Priority Date :NA
(33) Name of priority country :NA
(86) International Application No :PCT/SG2012/000216
Filing Date :18/06/2012
(87) International Publication No :WO 2013/191642
(61) Patent of Addition to Application Number :NA
Filing Date :NA
(62) Divisional to Application Number :NA
Filing Date :NA

(71)**Name of Applicant :**
1)BLUE AQUA INTERNATIONAL PTE LTD
Address of Applicant :8 Temasek Boulevard Suntec Tower Three Penthouse Level Singapore 038988 Singapore
(72)**Name of Inventor :**
1)SHISHEHCHIAN Farshad

(57) Abstract :
The present invention relates to a method of aquaculture of at least one farmed organism such as fish shrimp or any organism suitable for farming in an aquatic environment. There is provided a method of aquaculture of at least one farmed organism the method comprising steps: (i) providing an aquatic environment comprising at least one farmed organism phytoplankton and bacteria; (ii) providing at least one phytoplankton nutrient and at least one bacteria nutrient during a first predetermined period allowing phytoplankton and bacteria to grow in a first predetermined phytoplankton: bacteria ratio of more than 1; (iii) providing at least one phytoplankton nutrient and at least one bacteria nutrient during a second predetermined period allowing phytoplankton and bacteria to grow in a second predetermined phytoplankton :bacteria ratio wherein the second predetermined phytoplankton: bacteria ratio is lower than the first predetermined phytoplankton :bacteria ratio; and (iv) providing at least one phytoplankton nutrient and at least one bacteria nutrient during a third predetermined period allowing phytoplankton and bacteria to grow in a third predetermined phytoplankton :bacteria ratio wherein the third predetermined phytoplankton: bacteria ratio is lower than the second predetermined phytoplankton :bacteria ratio thereby allowing the at least one farmed organism to grow.

No. of Pages : 57 No. of Claims : 50

(12) PATENT APPLICATION PUBLICATION
(19) INDIA
(22) Date of filing of Application :30/10/2014
(21) Application No.9073/DELNP/2014 A
(43) Publication Date : 22/05/2015

(54) Title of the invention : METHODS AND COMPOSITIONS FOR PREPARING BIOLOGICAL SPECIMENS FOR MICROSCOPIC ANALYSIS

(51) International classification :G01N1/28,G02B21/34
(31) Priority Document No :61/681551
(32) Priority Date :09/08/2012
(33) Name of priority country :U.S.A.
(86) International Application No :PCT/US2013/031066
Filing Date :13/03/2013
(87) International Publication No :WO 2014/025392
(61) Patent of Addition to Application Number :NA
Filing Date :NA
(62) Divisional to Application Number :NA
Filing Date :NA

(71)**Name of Applicant :**
1)THE BOARD OF TRUSTEES OF THE LELAND STANFORD JUNIOR UNIVERSITY
Address of Applicant :1705 El Camino Real Palo Alto CA 94306 1106 U.S.A.
(72)**Name of Inventor :**
1)DEISSEROTH Karl A.
2)CHUNG Kwanghun

(57) Abstract :
Methods and compositions are provided for preparing a biological specimen for microscopic analysis. These methods find many uses for example in medicine and research e.g. to diagnose or monitor disease or graft transplantation to study healthy or diseased tissue to screen candidate agents for toxicity and efficacy in disease modification. Also provided are reagents devices kits and systems thereof that find use in practicing the subject methods.

No. of Pages : 77 No. of Claims : 53

(12) PATENT APPLICATION PUBLICATION
(19) INDIA
(22) Date of filing of Application :30/10/2014
(21) Application No.9074/DELNP/2014 A
(43) Publication Date : 22/05/2015

(54) Title of the invention : PROCESS FOR SEPARATING MONOCHLOROACETIC ACID AND DICHLOROACETIC ACID VIA EXTRACTIVE DISTILLATION USING AN ORGANIC SOLVENT

(51) International classification :C07C51/46,C07C53/16
(31) Priority Document No :12002517.6
(32) Priority Date :06/04/2012
(33) Name of priority country :EPO
(86) International Application No :PCT/EP2013/056969
Filing Date :03/04/2013
(87) International Publication No :WO 2013/150042
(61) Patent of Addition to Application Number :NA
Filing Date :NA
(62) Divisional to Application Number :NA
Filing Date :NA

(71)**Name of Applicant :**
1)AKZO NOBEL CHEMICALS INTERNATIONAL B.V.
Address of Applicant :Stationsstraat 77 NL 3811 MH Amersfoort Netherlands
(72)**Name of Inventor :**
1)PRAGT Johannes Jozef
2)JONGMANS Mark Theodorus Gerardus
3)BARGEMAN Gerrald
4)SCHUUR Boelo
5)AALDERING Jacobus Theodorus Josef
6)NIEUWHOF Melle Rinze
7)KISS Anton Alexandru
8)DE HAAN Andr Banier
9)LONDO'O RODRIGUEZ Alex
10)VAN STRIEN Cornelis Johannes Govardus

(57) Abstract :
The present invention pertains to a process for separating monochloroacetic acid and dichloroacetic acid from one another via extractive distillation using (a) an extractive agent that is chemically stable and has a BF affinity of between 65 kJ/mole and 110 kJ/mole and (b) an organic solvent that is either an acid with a lowest pKa of between 3.0 and 6.5 or a base with a BF affinity of between 40 kJ/mole and 75 kJ/mole with the proviso that said BFaffinity is lower than the BF affinity of the extractive agent said organic solvent being chemically stable and having a boiling point at atmospheric pressure of at least 468K comprising the steps of (i) contacting a mixture comprising monochloroacetic acid and dichloroacetic acid with the extractive agent (ii) distilling the mixture obtained in step (i) to obtain a monochloroacetic acid stream and a stream comprising dichloroacetic acid and the extractive agent (iii) subjecting the stream comprising dichloroacetic acid and the extractive agent to a regeneration step wherein the organic solvent is contacted with the mixture comprising monochloroacetic acid and dichloroacetic acid of step (i) or wherein the organic solvent is contacted with the mixture obtained in step (i) prior to and/or during step (ii) or wherein the organic solvent is contacted with the stream comprising dichloroacetic acid and the extractive agent obtained in step (ii) prior to or during step (iii) or any combination thereof.

No. of Pages : 31 No. of Claims : 17

(12) PATENT APPLICATION PUBLICATION
(21) Application No.9018/DELNP/2014 A
(19) INDIA
(22) Date of filing of Application :28/10/2014
(43) Publication Date : 22/05/2015

(54) Title of the invention : PROCESS FOR THE PREPARATION OF BRANCHED POLYBUTADIENE HAVING A HIGH CONTENT OF 1 4 CIS UNITS

(51) International classification :B60C1/00,C08F4/44,C08F4/54
(31) Priority Document No :MI2012A000808
(32) Priority Date :11/05/2012
(33) Name of priority country :Italy
(86) International Application No :PCT/IB2013/053230
Filing Date :24/04/2013
(87) International Publication No :WO 2013/168039
(61) Patent of Addition to Application Number :NA
Filing Date :NA
(62) Divisional to Application Number :NA
Filing Date :NA

(71)**Name of Applicant :**
1)VERSALIS SP.A.
Address of Applicant :Piazza Boldrini 1 I 20097 San Donato Milanese Italy
(72)**Name of Inventor :**
1)VALLIERI Andrea
2)ZINNA Marianna
3)PERRETTA Costantino

(57) Abstract :
A process for the preparation of branched polybutadiene having a high content of 1,4 cis units which comprises polymerizing butadiene in the presence of at least one organic solvent and in the presence of: a) a catalytic system prepared in situ including: (a) at least one neodymium carboxylate (a) at least one alkyl compound of aluminum (A) at least one alkyl compound of aluminum containing at least one halogen atom and b) at least one organic ester containing at least one halogen atom. Said branched polybutadiene having a high content of 1,4 cis units depending on the branching degree and molecular weight distribution can be advantageously used in various applications ranging from the modification of plastic materials [production for example of high impact polystyrene (HIPS)] to the production of tyres in particular the production of treads and/or of sidewalls of tyres.

No. of Pages : 37 No. of Claims : 16

(12) PATENT APPLICATION PUBLICATION
(21) Application No.9019/DELNP/2014 A
(19) INDIA
(22) Date of filing of Application :28/10/2014
(43) Publication Date : 22/05/2015

(54) Title of the invention : PROCESS FOR THE INSERTION AND CONVEYING OF LABILE ADDITIVES IN STREAMS OF MOLTEN MATERIAL

(51) International classification :C08J3/20,B29C47/10
(31) Priority Document No :MI2012A000571
(32) Priority Date :06/04/2012
(33) Name of priority country :Italy
(86) International Application No :PCT/IB2013/052653
Filing Date :03/04/2013
(87) International Publication No :WO 2013/150456
(61) Patent of Addition to Application Number :NA
Filing Date :NA
(62) Divisional to Application Number :NA
Filing Date :NA

(71)**Name of Applicant :**
1)VERSALIS SPA
Address of Applicant :Piazza Boldrini 1 I 20097 Milano San Donato Milanese Italy
(72)**Name of Inventor :**
1)FELISARI Riccardo
2)CASALINI Alessandro
3)VALENTINO Olga

(57) Abstract :
The present invention relates to a process for the insertion and conveying of a labile additive or a mixture thereof in a transporting pipe in which a main stream of molten material flows said process characterized in that it incorporates said additive or said mixture in a portion of the pipe delimited by the main stream according to one of the following alternative modes: a) in a longitudinal direction with respect to the flow direction of the main stream of molten material or b) in a transversal direction with respect to the flow direction of the main stream of. molten material or c) according to a composition of the longitudinal (a) and transversal (b) mode thus forming a resulting stream which keeps the labile additives segregated from the main stream of molten material.

No. of Pages : 51 No. of Claims : 22

(12) PATENT APPLICATION PUBLICATION
(21) Application No.9020/DELNP/2014 A
(19) INDIA
(22) Date of filing of Application :28/10/2014
(43) Publication Date : 22/05/2015

(54) Title of the invention : MICROINFUSER WITH AUTOMATIC NEEDLE RETRACTION

(51) International classification :A61M5/145
(31) Priority Document No :61/624026
(32) Priority Date :13/04/2012
(33) Name of priority country :U.S.A.
(86) International Application No :PCT/US2013/035925
Filing Date :10/04/2013
(87) International Publication No :WO 2013/155153
(61) Patent of Addition to Application Number :NA
Filing Date :NA
(62) Divisional to Application Number :NA
Filing Date :NA

(71)**Name of Applicant :**
1)BECTON DICKINSON AND COMPANY
Address of Applicant :1 Becton Drive Franklin Lakes New Jersey 07417 U.S.A.
(72)**Name of Inventor :**
1)CRONENBERG Richard

(57) Abstract :
A device (10) for delivering a fluid includes a housing (12) defining an interior space (22) and having a bottom surface (18) configured for contacting a patient. The bottom surface (18) defines a needle opening (56). The device (10)also includes a reservoir (26) disposed within the interior space (22) of the housing (12) for containing a fluid therein a needle carrier (30) disposed within the housing (12) and an injection needle (28) supported by the needle carrier (30) and defining a lumen. The lumen of the injection needle (28) is configured to be placed in fluid communication with the reservoir (26). The injection needle (28) is transitionable from an initial position in which the injection needle is disposed within the housing (12) to a use position in which the injection needle extends through the needle opening (56) and a substantially shielded position in which the injection needle (28) is disposed within the housing (12) and the lumen of the needle (28) is blocked by a portion of the housing (12).

No. of Pages : 46 No. of Claims : 22

(12) PATENT APPLICATION PUBLICATION
(19) INDIA
(22) Date of filing of Application :30/10/2014
(21) Application No.9080/DELNP/2014 A
(43) Publication Date : 22/05/2015

(54) Title of the invention : RHEOLOGY MODIFIERS

(51) International classification :C09K8/32,C09K8/34,C08G18/10
(31) Priority Document No :13/459677
(32) Priority Date :30/04/2012
(33) Name of priority country :U.S.A.
(86) International Application No :PCT/US2013/037598
Filing Date :22/04/2013
(87) International Publication No :WO 2013/165728
(61) Patent of Addition to Application Number :NA
Filing Date :NA
(62) Divisional to Application Number :NA
Filing Date :NA

(71)**Name of Applicant :**
1)CHEVRON PHILLIPS CHEMICAL COMPANY LP
Address of Applicant :10001 Six Pines Drive The Woodlands Texas 77380 U.S.A.
(72)**Name of Inventor :**
1)HARRIS Jeffrey
2)BYERS Jim

(57) Abstract :
A non aqueous wellbore servicing fluid comprising a rheology modifier wherein the rheology modifier comprises a reaction product of a polysulfide a dimer acid and a polyfunctional amine. A method of conducting an oilfield operation comprising placing an oil based mud comprising a rheology modifier into a wellbore wherein the rheology modifier comprises a reaction product of a polysulfide a dimer acid and a polyfunctional amine.

No. of Pages : 27 No. of Claims : 20

(12) PATENT APPLICATION PUBLICATION
(19) INDIA
(22) Date of filing of Application :22/10/2014
(21) Application No.8852/DELNP/2014 A
(43) Publication Date : 22/05/2015

(54) Title of the invention : ANALYSIS AND VISUALIZATION OF OCT ANGIOGRAPHY DATA

(51) International classification :A61B3/10,G01B9/02
(31) Priority Document No :61/645513
(32) Priority Date :10/05/2012
(33) Name of priority country :U.S.A.
(86) International Application No :PCT/EP2013/059560
Filing Date :08/05/2013
(87) International Publication No :WO 2013/167641
(61) Patent of Addition to Application Number :NA
Filing Date :NA
(62) Divisional to Application Number :NA
Filing Date :NA

(71)**Name of Applicant :**
1)CARL ZEISS MEDITEC AG
Address of Applicant :Gschwitzer Str. 51 52 07745 Jena Germany
(72)**Name of Inventor :**
1)DURBIN Mary
2)SHARMA Utkarsh
3)SRIVASTAVA Siddharth
4)SCHMOLL Tilmann

(57) Abstract :
Methods for analyzing and visualizing OCT angiography data are presented. In one embodiment an automated method for identifying the foveal avascular zone in a two dimensional en face image generated from motion contrast data is presented. Several 3D visualization techniques are presented including one in which a particular vessel is selected in a motion contrast image and all connected vessels are highlighted. A further embodiment includes a stereoscopic visualization method. In addition a variety of metrics for characterizing OCT angiography image data are described.

No. of Pages : 28 No. of Claims : 19

(12) PATENT APPLICATION PUBLICATION
(19) INDIA
(22) Date of filing of Application :22/10/2014
(21) Application No.8853/DELNP/2014 A
(43) Publication Date : 22/05/2015

(54) Title of the invention : FIT INDICATORS FOR PULL ON TYPE ABSORBENT ARTICLE

(51) International classification :A61F13/496
(31) Priority Document No :NA
(32) Priority Date :NA
(33) Name of priority country :NA
(86) International Application No :PCT/CN2012/074515
Filing Date :23/04/2012
(87) International Publication No :WO 2013/159273
(61) Patent of Addition to Application Number :NA
Filing Date :NA
(62) Divisional to Application Number :NA
Filing Date :NA

(71)**Name of Applicant :**
1)THE PROCTER & GAMBLE COMPANY
Address of Applicant :One Procter & Gamble Plaza Cincinnati Ohio 45202 U.S.A.
(72)**Name of Inventor :**
1)MORIMOTO Koichi
2)ISHIHARA Kaoru
3)GLAHN Tina Marie

(57) Abstract :
A pull on disposable absorbent article (20) having a fit indicator is disclosed. The pull on disposable absorbent article (20) has an extensible belt (11) transversely disposed with respect to a chassis portion (10). The belt portion (11) of the pull on article (20) is provided with a fit indicator graphic (120). When the belt portion (11) of the article (20) is unstretched the fit indicator graphic (120) has a first appearance (123,223). When the belt portion (11) of the article (20) is stretched to its design range for wear the fit indicator graphic (120) has a second appearance (125,225). When the belt portion (11) of the article (20) is stretched beyond its design range for wear the fit indicator graphic (120) has a third appearance (127,227). By conforming that the configuration of the fit indicator graphic (120) is in the second appearance (125,225) in wear the proper fit of the disposable absorbent article (20) may be verified. Uses of the fit indicator graphics (120) in combination with reference graphics (122) and in arrays of the disposable absorbent articles (20) are also disclosed.

No. of Pages : 31 No. of Claims : 10

(12) PATENT APPLICATION PUBLICATION
(21) Application No.8854/DELNP/2014 A
(19) INDIA
(22) Date of filing of Application :22/10/2014
(43) Publication Date : 22/05/2015

(54) Title of the invention : METHOD FOR CONTINUOUSLY PRODUCING HIGH MOLECULAR WEIGHT POLYCARBONATE RESIN

(51) International classification :C08G64/30
(31) Priority Document No :2012114936
(32) Priority Date :18/05/2012
(33) Name of priority country :Japan
(86) International Application No :PCT/JP2013/063345
Filing Date :14/05/2013
(87) International Publication No :WO 2013/172317
(61) Patent of Addition to Application Number :NA
Filing Date :NA
(62) Divisional to Application Number :NA
Filing Date :NA

(71)**Name of Applicant :**
1)MITSUBISHI GAS CHEMICAL COMPANY INC.
Address of Applicant :5 2 Marunouchi 2 chome Chiyoda ku Tokyo 1008324 Japan
(72)**Name of Inventor :**
1)ISAHAYA Yoshinori
2)HIRASHIMA Atsushi
3)HARADA Hidefumi
4)ITO Maki
5)HAYAKAWA Jun ya
6)ISOBE Takehiko
7)TOKUTAKE Taichi
8)SHINKAI Yousuke

(57) Abstract :
Provided is an improved method for continuously producing a high molecular weight polycarbonate resin by subjecting an aromatic polycarbonate prepolymer and an aliphatic diol compound to a molecular weight increasing linking reaction whereby it becomes possible to allow an aliphatic diol compound having a relatively low boiling point to contribute to the molecular weight increasing linking reaction with high efficiency and it also becomes possible to produce a high molecular weight polycarbonate resin having excellent quality in an economically advantageous manner. The method comprises subjecting an aromatic dihydroxy compound and a diester carbonate to a polycondensation reaction to produce an aromatic polycarbonate prepolymer adding an aliphatic diol compound having an aliphatic group capable of binding to a terminal hydroxy group to the aromatic polycarbonate prepolymer to produce a prepolymer mixture and subjecting the prepolymer mixture to a molecular weight increasing linking reaction under pressure reduced conditions wherein the aliphatic diol compound is added under a pressure of higher than 200 torr and subsequently the prepolymer mixture is subjected to the molecular weight increasing linking reaction before the concentration of a terminal hydroxy group of the aromatic polycarbonate prepolymer in the prepolymer mixture reaches 2000 ppm.

No. of Pages : 88 No. of Claims : 13

(12) PATENT APPLICATION PUBLICATION
(21) Application No.8855/DELNP/2014 A
(19) INDIA
(22) Date of filing of Application :22/10/2014
(43) Publication Date : 22/05/2015

(54) Title of the invention : METHOD AND KIT FOR DETECTING HLA A24:02

(51) International classification :C12N15/09,C12Q1/68
(31) Priority Document No :2012096615
(32) Priority Date :20/04/2012
(33) Name of priority country :Japan
(86) International Application No :PCT/JP2013/061584
Filing Date :19/04/2013
(87) International Publication No :WO 2013/157625
(61) Patent of Addition to Application Number :NA
Filing Date :NA
(62) Divisional to Application Number :NA
Filing Date :NA

(71)**Name of Applicant :**
1)OTSUKA PHARMACEUTICAL CO. LTD.
Address of Applicant :9 Kanda Tsukasamachi 2 chome Chiyoda ku Tokyo 1018535 Japan
(72)**Name of Inventor :**
1)ONISHI Hideaki

(57) Abstract :
The purpose of the present invention is to provide a method for specifically detecting an HLA A24:02 allele with high accuracy and in a simple manner while reducing the risk of contamination. As means for achieving the purpose the present invention provides: a primer set which contains a PCR primer comprising a DNA sequence lying between the 3 terminal and at least the 16th nucleotide in the DNA sequence represented by SEQ ID NO: 1; a kit containing the primer set; and a method for utilizing the kit.

No. of Pages : 76 No. of Claims : 5

(12) PATENT APPLICATION PUBLICATION
(19) INDIA
(22) Date of filing of Application :22/10/2014
(21) Application No.8897/DELNP/2014 A
(43) Publication Date : 22/05/2015

(54) Title of the invention : LID ATTACHED TO A CONTAINER BY A COLLAR

(51) International classification :B65D51/24,B65D43/16
(31) Priority Document No :61/639857
(32) Priority Date :27/04/2012
(33) Name of priority country :U.S.A.
(86) International Application No :PCT/US2013/038468
Filing Date :26/04/2013
(87) International Publication No :WO 2013/163583
(61) Patent of Addition to Application Number :NA
Filing Date :NA
(62) Divisional to Application Number :NA
Filing Date :NA

(71)**Name of Applicant :**
1)ABBOTT LABORATORIES
Address of Applicant :Dept. 377/AP6A 1 100 Abbott Park Road Abbott Park Illinois 60064 U.S.A.
(72)**Name of Inventor :**
1)MCBROOM Jeremy
2)PERRY James

(57) Abstract :
A container (10) for holding granular or powdered material. The container (10) includes walls a collar (14) a lid (16) and a latch (200). The walls define an interior space (26) and an upper portion the upper portion defining a sealing flange (30) and an opening to the interior space. The collar (14) is attached to the upper portion. The lid 816) is attached to the collar (14) for positioning between an open position and a closed position and adapted to cover the opening while in the closed position. The latch (200) is attached to an outer surface of the lid (16). The latch may have an actuator (202) rotatable in two directions relative to the lid and detachably engaged to a catch (220) which protrudes from an outside surface of the collar (14).

No. of Pages : 46 No. of Claims : 17

(12) PATENT APPLICATION PUBLICATION
(19) INDIA
(22) Date of filing of Application :22/10/2014
(21) Application No.8898/DELNP/2014 A
(43) Publication Date : 22/05/2015

(54) Title of the invention : A METHOD OF ENHANCING PERFORMANCE IN BROILER CHICKENS

(51) International classification :A23K1/00,A23K1/16,A23K1/18
(31) Priority Document No :61/648793
(32) Priority Date :18/05/2012
(33) Name of priority country :U.S.A.
(86) International Application No :PCT/EP2013/060249
Filing Date :17/05/2013
(87) International Publication No:WO 2013/171330
(61) Patent of Addition to Application Number :NA
Filing Date :NA
(62) Divisional to Application Number :NA
Filing Date :NA

(71)**Name of Applicant :**
1)INTERVET INTERNATIONAL B.V.
Address of Applicant :Wim de Krverstraat 35 NL 5831 AN Boxmeer Netherlands
(72)**Name of Inventor :**
1)ROGERS John A.

(57) Abstract :
A method of enhancing the performance of chicken comprising administering zilpaterol to the chicken wherein the concentration of zilpaterol is from about 1 ppm to about 13 ppm and is administered every day for a period of about 7 to about 21 days.

No. of Pages : 29 No. of Claims : 16

(12) PATENT APPLICATION PUBLICATION
(19) INDIA
(22) Date of filing of Application :30/10/2014
(21) Application No.9088/DELNP/2014 A
(43) Publication Date : 22/05/2015

(54) Title of the invention : HERBICIDAL COMPOSITIONS COMPRISING N (TETRAZOL 5 YL) OR N (TRIAZOL 5 YL)ARYLCARBOXAMIDES

(51) International classification :A01N43/653,A01N43/713,A01N43/707
(31) Priority Document No :12169189.3
(32) Priority Date :24/05/2012
(33) Name of priority country :EPO
(86) International Application No :PCT/EP2013/060468
Filing Date :22/05/2013
(87) International Publication No :WO 2013/174845
(61) Patent of Addition to Application Number :NA
Filing Date :NA
(62) Divisional to Application Number :NA
Filing Date :NA

(71)**Name of Applicant :**
1)BAYER CROPSCIENCE AG
Address of Applicant :Alfred Nobel Str. 50 40789 Monheim Germany
(72)**Name of Inventor :**
1)VAN ALMSICK Andreas
2)GATZWEILER Elmar
3)HACKER Erwin
4)BRAUN Ralf
5)MENNE Hubert
6)TRABOLD Klaus
7)WALDRAFF Christian

(57) Abstract :
There are described herbicidal compositions which comprise active substances from the group of the N-(tetrazol-5- yl)- and N-(triazol-5-yl)arylcarboxamides and further herbicides and optionally safeners. These herbicidal compositions are o particularly suited for use against harmful plants in crops of useful plants.

No. of Pages : 76 No. of Claims : 13

(12) PATENT APPLICATION PUBLICATION
(19) INDIA
(22) Date of filing of Application :30/10/2014
(21) Application No.9089/DELNP/2014 A
(43) Publication Date : 22/05/2015

(54) Title of the invention : SOLID PHASE PEPTIDE SYNTHESIS OF INSULIN USING SIDE CHAIN ANCHORED LYSINE

(51) International classification :C07K14/62,C07K1/04
(31) Priority Document No :61/636193
(32) Priority Date :20/04/2012
(33) Name of priority country :U.S.A.
(86) International Application No :PCT/IB2013/053111
Filing Date :19/04/2013
(87) International Publication No :WO 2013/156977
(61) Patent of Addition to Application Number :NA
Filing Date :NA
(62) Divisional to Application Number :NA
Filing Date :NA

(71)**Name of Applicant :**
1)BARLOS Kleomenis K.
Address of Applicant :c/o Chemical & Biopharmaceutical Laboratories of Patras S.A. Industrial Area of Patras Building Square 1 Achaea GR 26000 Patras Greece
(72)**Name of Inventor :**
1)BARLOS Kleomenis K.

(57) Abstract :
The present application discloses the preparation of peptides including insulin and insulin derivatives using efficient methods for solid phase and solution phase peptide synthesis.

No. of Pages : 50 No. of Claims : 25

(12) PATENT APPLICATION PUBLICATION
(19) INDIA
(22) Date of filing of Application :30/10/2014
(21) Application No.9090/DELNP/2014 A
(43) Publication Date : 22/05/2015

(54) Title of the invention : USE OF PRO FUNGICIDES OF UK 2A FOR CONTROL OF BLACK SIGATOKA

(51) International classification :A01P3/00
(31) Priority Document No :61/643630
(32) Priority Date :07/05/2012
(33) Name of priority country :U.S.A.
(86) International Application No :PCT/US2013/039730
Filing Date :06/05/2013
(87) International Publication No :WO 2013/169661
(61) Patent of Addition to Application Number :NA
Filing Date :NA
(62) Divisional to Application Number :NA
Filing Date :NA

(71)**Name of Applicant :**
1)DOW AGROSCIENCES LLC
Address of Applicant :9330 Zionsville Road Indianapolis IN 46268 U.S.A.
(72)**Name of Inventor :**
1)OWEN W. John
2)PANIAGUA Leonardo
3)OUIMETTE David G.

(57) Abstract :
The present disclosure is related to the field of agrochemicals including profungicides of UK 2A and their use to control Black Sigatoka. One embodiment of the present disclosure includes a method of controlling a pathogen induced disease in a plant that is at risk of being diseased from the pathogen comprising contacting the plant or an area adjacent to the plant with a composition including profungicides of UK 2A.

No. of Pages : 20 No. of Claims : 4

(12) PATENT APPLICATION PUBLICATION
(19) INDIA
(22) Date of filing of Application :30/10/2014
(21) Application No.9091/DELNP/2014 A
(43) Publication Date : 22/05/2015

(54) Title of the invention : ORAL FORMULATION

(51) International classification :A61K9/20,A61K31/496
(31) Priority Document No :61/640474
(32) Priority Date :30/04/2012
(33) Name of priority country :U.S.A.
(86) International Application No :PCT/JP2013/062985
Filing Date :30/04/2013
(87) International Publication No :WO 2013/165021
(61) Patent of Addition to Application Number :NA
Filing Date :NA
(62) Divisional to Application Number :NA
Filing Date :NA

(71)**Name of Applicant :**
1)OTSUKA PHARMACEUTICAL CO. LTD.
Address of Applicant :2 9 Kanda Tsukasamachi Chiyoda ku Tokyo 1018535 Japan
(72)**Name of Inventor :**
1)IWAMOTO Taro
2)KURAHASHI Nobuyuki
3)OKA Yoshikazu
4)TAKEDA Chikako

(57) Abstract :
Provided are an oral formulation capable of improving easy administrability and showing good preservation stability and a substrate for oral formulation. An oral formulation containing a medicament; sugar alcohol; one or more kinds of hydrophilic polysaccharides selected from the group consisting of acacia pullulan and maltodextrin; a gelling agent; and water and a substrate for oral formulation which contains sugar alcohol; the above mentioned hydrophilic polysaccharides; a gelling agent; and water.

No. of Pages : 24 No. of Claims : 15

(12) PATENT APPLICATION PUBLICATION
(19) INDIA
(22) Date of filing of Application :30/10/2014
(21) Application No.9092/DELNP/2014 A
(43) Publication Date : 22/05/2015

(54) Title of the invention : MEDICINAL COMPOSITION FOR TREATING INFARCTION

(51) International classification :A61K45/00,A61K9/127,A61K31/7105
(31) Priority Document No :2012090873
(32) Priority Date :12/04/2012
(33) Name of priority country :Japan
(86) International Application No :PCT/JP2013/061118
Filing Date :12/04/2013
(87) International Publication No :WO 2013/154192
(61) Patent of Addition to Application Number :NA
Filing Date :NA
(62) Divisional to Application Number :NA
Filing Date :NA

(71)**Name of Applicant :**
1)GIFU UNIVERSITY
Address of Applicant :1 1 Yanagido Gifu shi Gifu 5011193 Japan
2)OTSUKA PHARMACEUTICAL CO. LTD.
(72)**Name of Inventor :**
1)MINATOGUCHI Shinya
2)AKAO Yukihiro

(57) Abstract :
Provided is a medicinal composition for treating infarction such as myocardial infarction and cerebral infarction using a method that is different from conventional therapeutic methods with the use of a thrombolytic agent or balloon therapy. An autophagy enhancer such as hsa miR 145 is used as the active ingredient of the medicinal composition for treating infarction. In particular an autophagy enhancer such as hsa miR 145 being in a liposomal form is used as the active ingredient of the medicinal composition for treating infarction.

No. of Pages : 26 No. of Claims : 13

(12) PATENT APPLICATION PUBLICATION
(19) INDIA
(22) Date of filing of Application :27/10/2014
(21) Application No.8965/DELNP/2014 A
(43) Publication Date : 22/05/2015

(54) Title of the invention : WIRELESS TERMINAL WIRELESS STATION WIRELESS COMMUNICATION SYSTEM AND METHOD IMPLEMENTED IN SAME

(51) International classification :H04B17/00,H04W16/14,H04W88/02
(31) Priority Document No :2012102336
(32) Priority Date :27/04/2012
(33) Name of priority country :Japan
(86) International Application No :PCT/JP2013/000088
Filing Date :11/01/2013
(87) International Publication No :WO 2013/161135
(61) Patent of Addition to Application Number :NA
Filing Date :NA
(62) Divisional to Application Number :NA
Filing Date :NA

(71)**Name of Applicant :**
1)NEC CORPORATION
Address of Applicant :7 1 Shiba 5 chome Minato ku Tokyo 1088001 Japan
(72)**Name of Inventor :**
1)FUTAKI Hisashi
2)AMINAKA Hiroaki
3)SUGAHARA Hiroto
4)KAKURA Yoshikazu
5)MURAOKA Kazushi

(57) Abstract :
In one embodiment of the present invention a wireless terminal (2) is used in a wireless communication system (100) and communicates with a wireless station (1). The wireless terminal (2) contains a measurement unit (20). The measurement unit (20) operates in a manner so as to execute a second terminal measurement in a shared frequency shared among a plurality of wireless systems including the wireless communication system (100) using a terminal measurement procedure for executing a first terminal measurement corresponding to a wireless access technique applied in the wireless communication system (100). As a result this embodiment contributes to the simplification of a measurement function that the wireless terminal is to support when the wireless communication system uses a shared frequency (e.g. TVWS) shared among a plurality of wireless systems.

No. of Pages : 68 No. of Claims : 59

(12) PATENT APPLICATION PUBLICATION
(19) INDIA
(22) Date of filing of Application :27/10/2014
(21) Application No.8966/DELNP/2014 A
(43) Publication Date : 22/05/2015

(54) Title of the invention : PLATFORM INDEPENDENT MANAGEMENT CONTROLLER

(51) International classification :H04L12/24
(31) Priority Document No :13/430292
(32) Priority Date :26/03/2012
(33) Name of priority country :U.S.A.
(86) International Application No :PCT/US2013/029023
Filing Date :05/03/2013
(87) International Publication No :WO 2013/148082
(61) Patent of Addition to Application Number :NA
Filing Date :NA
(62) Divisional to Application Number :NA
Filing Date :NA

(71)**Name of Applicant :**
1)DELL PRODUCTS L.P.
Address of Applicant :One Dell Way Round Rock TX 78682 2244 U.S.A.
(72)**Name of Inventor :**
1)FLOREZ LARRAHONDO German
2)PIKE Jimmy D.
3)VIVIO Joseph Andrew
4)STUEWE John
5)SEKEL Joseph M.
6)MILLS Richard Steven

(57) Abstract :
DCMI functionality is extended to platforms of a datacenter by integrating a management controller in each of plural platforms and interfacing the management controllers with a management server through a network. End users interface with platforms of the datacenter using DCMI protocol communications. The management server supports communication with management controllers by receiving DCMI messages and translating the DCMI messages to a text based protocol for communications with the management controllers. In one embodiment the management controllers push sensor information for their associated platforms to a sensor cache of the management server so that the management sensor references the cache to respond to DCMI requests for sensor information.

No. of Pages : 20 No. of Claims : 20

(12) PATENT APPLICATION PUBLICATION
(21) Application No.8967/DELNP/2014 A
(19) INDIA
(22) Date of filing of Application :27/10/2014
(43) Publication Date : 22/05/2015

(54) Title of the invention : ENTERPRISE LEVEL DATA COLLECTION SYSTEMS AND METHODOLOGIES

(51) International classification :G06F17/00
(31) Priority Document No :NA
(32) Priority Date :NA
(33) Name of priority country :NA
(86) International Application No :PCT/IL2012/000153
Filing Date :04/04/2012
(87) International Publication No :WO 2013/150508
(61) Patent of Addition to Application Number :NA
Filing Date :NA
(62) Divisional to Application Number :NA
Filing Date :NA

(71)**Name of Applicant :**
1)VARONIS SYSTEMS INC.
Address of Applicant :1250 Broadway 31st Floor New York New York 10001 U.S.A.
(72)**Name of Inventor :**
1)FAITELSON Yakov
2)KORKUS Ohad
3)BASS David
4)KAYSAR Yzhar

(57) Abstract :
An enterprise data collection system including at least one database for receiving over a network and storing data collected from data resources at a plurality of physical sites located at disparate locations a plurality of remotely synchronizable probes (RSPs) located at the plurality of physical sites the remotely synchronizable probes (RSPs) performing at least one of the following data collection functions: real time event collection file system crawling for data structure and permissions data content analysis data indexing data tagging and event triggered alerts and at least one RSP manager located remotely from at least one of the plurality of remotely synchronizable probes and being operative to govern the operation of and orchestrate data collection and transmission by the plurality of remotely synchronizable probes (RSPs).

No. of Pages : 54 No. of Claims : 14

(12) PATENT APPLICATION PUBLICATION
(19) INDIA
(22) Date of filing of Application :30/10/2014
(21) Application No.9100/DELNP/2014 A
(43) Publication Date : 22/05/2015

(54) Title of the invention : MIRROR WITH OPTIONAL PROTECTIVE PAINT LAYER AND/OR METHODS OF MAKING THE SAME

(51) International classification :G02B5/08,C23C28/00,C03C17/36
(31) Priority Document No :61/642677
(32) Priority Date :04/05/2012
(33) Name of priority country :U.S.A.
(86) International Application No :PCT/US2013/039188
Filing Date :02/05/2013
(87) International Publication No :WO 2013/166232
(61) Patent of Addition to Application Number :NA
Filing Date :NA
(62) Divisional to Application Number :NA
Filing Date :NA

(71)**Name of Applicant :**
1)CENTRE LUXEMBOURGEOIS DE RECHERCHES POUR LE VERRE ET LA CERAMIQUE (C.R.V.C.) SARL
Address of Applicant :Zone Industrielle Wolser L 3452 Dudelange Luxembourg
(72)**Name of Inventor :**
1)BENITO GUTIERREZ Guillermo
2)UNQUERA ALGORRI Javier
3)ALVAREZ RODRIGUEZ Angel

(57) Abstract :
Certain example embodiments of this invention relate to sputtered aluminum second surface mirrors with permanent protective coatings optionally provided thereto and/or methods of making the same. A mirror coating supported by a substrate may include for example first and second silicon inclusive layers sandwiching a metallic or substantially metallic layer including aluminum and an optional layer including Ni and/or Cr in direct contact with the metallic or substantially metallic layer comprising aluminum. A protective paint is disposed directly over and contacting an outermost layer of the mirror coating. The protective paint once applied and cured is adapted to survive seven day exposure to an 85 degree C temperature at 85% relative humidity as well as seven day exposure to a 49 degree C temperature at 100% relative humidity.

No. of Pages : 30 No. of Claims : 25

(12) PATENT APPLICATION PUBLICATION
(19) INDIA
(22) Date of filing of Application :29/10/2014
(21) Application No.9057/DELNP/2014 A
(43) Publication Date : 22/05/2015

(54) Title of the invention : FLAME RESISTANT HOSE REINFORCED WITH FIBERGLASS CORD FABRIC

(51) International classification :F16L11/08,F16L11/24
(31) Priority Document No :13/463544
(32) Priority Date :03/05/2012
(33) Name of priority country :U.S.A.
(86) International Application No :PCT/US2013/036684
Filing Date :16/04/2013
(87) International Publication No :WO 2013/165682
(61) Patent of Addition to Application Number :NA
Filing Date :NA
(62) Divisional to Application Number :NA
Filing Date :NA

(71)**Name of Applicant :**
1)THE GATES CORPORATION
Address of Applicant :1551 Wewatta Street Denver CO 80202 U.S.A.
(72)**Name of Inventor :**
1)GRAY Yelena
2)ZEDALIS Timothy C.

(57) Abstract :
A flame resistant hose having a nitrile containing rubber inner tube layer; two reinforcing plies one or more insulating plies of rubberized fiberglass unidirectional cord fabric helically wrapped at a helix angle in the range of 40 60 degrees with respect to the hose longitudinal axis and with the edges of each reinforcing ply overlapping up to about 0.5 inches; an optional rubber cushion or tie layer between the reinforcing plies and the insulating plies; and a polychloroprene rubber outer cover layer. The hose may have one or more helical wires embedded in the hose such as between the two reinforcing layers. The hose successfully passes fire resistance testing when tested according to BS ISO 15540:1999 incorporating amendment number 1.

No. of Pages : 16 No. of Claims : 20

(12) PATENT APPLICATION PUBLICATION
(19) INDIA
(22) Date of filing of Application :29/10/2014
(21) Application No.9058/DELNP/2014 A
(43) Publication Date : 22/05/2015

(54) Title of the invention : METHOD AND APPARATUS FOR SORTING OR RETRIEVING ITEMS

(51) International classification :B65G1/04,B65G1/06,B65G1/137
(31) Priority Document No :61/622000
(32) Priority Date :09/04/2012
(33) Name of priority country :U.S.A.
(86) International Application No :PCT/US2013/035836
Filing Date :09/04/2013
(87) International Publication No :WO 2013/155107
(61) Patent of Addition to Application Number :NA
Filing Date :NA
(62) Divisional to Application Number :NA
Filing Date :NA

(71)**Name of Applicant :**
1)OPEX CORPORATION
Address of Applicant :305 Commerce Drive Moorestown NJ 08057 4234 U.S.A.
(72)**Name of Inventor :**
1)DEWITT Robert R.
2)CHEZIK Peter M.
3)VALINSKY Joseph
4)STAHL Ola
5)KARTIK S.

(57) Abstract :
A method and apparatus are provided for sorting or retrieving items to/from a plurality of destinations areas (100). The items are loaded onto one of a plurality of independently controlled delivery vehicles (200). The delivery vehicles follow a track (110) that guides the delivery vehicles to/from the destination areas (100) which are positioned along the track. Once at the appropriate destination area an item is transferred between the delivery vehicle and the destination area.

No. of Pages : 96 No. of Claims : 55

(12) PATENT APPLICATION PUBLICATION
(21) Application No.9059/DELNP/2014 A
(19) INDIA
(22) Date of filing of Application :29/10/2014
(43) Publication Date : 22/05/2015

(54) Title of the invention : COMPOSITIONS AND METHODS FOR MODIFYING THE EXPRESSION OF GENES OF INTEREST

(51) International classification :C12N15/113
(31) Priority Document No :BR102012 0081628
(32) Priority Date :09/04/2012
(33) Name of priority country :Brazil
(86) International Application No :PCT/BR2013/000110
Filing Date :09/04/2013
(87) International Publication No :WO 2013/152408
(61) Patent of Addition to Application Number :NA
Filing Date :NA
(62) Divisional to Application Number :NA
Filing Date :NA

(71)**Name of Applicant :**
1)EMPRESA BRASILEIRA DE PESQUISA AGROPECU□RIA EMBRAPA
Address of Applicant :PqEB Parque Esta§£o Biol³gica Edifcio Sede Final W/3 Norte Plano Piloto CEP 70770 901 Braslia DF Brazil
(72)**Name of Inventor :**
1)DANTAS DE ALMEIDA Juliana
2)GOMES BARROS Leila Maria
3)CARNEIRO Mauro
4)CARVALHO ANDRADE Alan
5)RODRIGUES DA SILVA Felipe
6)PROTASIO PEREIRA Luiz Filipe
7)GUITTON COTTA Michelle
8)SOUZA DA EIRA Mirian Therezinha

(57) Abstract :
The present invention relates to a specific promoter sequence for the expression of genes of interest in fruit endosperm. The invention also describes DNA constructs that contain the promoter as well as the method that uses these constructs to produce plants plant cells or transgenic protoplasts. The expression of the transgene exclusively in the organ of interest allows the exogenous transcript to accumulate only in the fruit and is advantageous over constitutive expression since it makes it easier to implement strategies that aim at obtaining cultivars with higher added value such as: adaptation to environmental stresses resistance to pathogens pests and agrochemicals increase in nutritional and therapeutic value and a new alternative for expression systems in plant organisms to generate more competitive cultivars at lower costs. Moreover the present invention also describes a sequence with constitutive expression which offers an alternative for implementing expression systems when constitutive expression is required. The objective of the invention is to increase the economic social and environmental benefits as well as the biosafety of genetic engineering.

No. of Pages : 49 No. of Claims : 18

(12) PATENT APPLICATION PUBLICATION
(19) INDIA
(22) Date of filing of Application :30/10/2014
(21) Application No.9102/DELNP/2014 A
(43) Publication Date : 22/05/2015

(54) Title of the invention : COOLER APPARATUS AND CONTROL METHOD THEREFOR

(51) International classification :F01P11/02,F01P11/18
(31) Priority Document No :2012254416
(32) Priority Date :20/11/2012
(33) Name of priority country :Japan
(86) International Application No :PCT/IB2013/002790
Filing Date :15/11/2013
(87) International Publication No :WO 2014/080278
(61) Patent of Addition to Application Number :NA
Filing Date :NA
(62) Divisional to Application Number :NA
Filing Date :NA

(71)**Name of Applicant :**
1)TOYOTA JIDOSHA KABUSHIKI KAISHA
Address of Applicant :1 Toyota cho Toyota shi Aichi ken 471 8571 Japan
(72)**Name of Inventor :**
1)MUSHIGA Kentaro
2)SHINTANI Osamu
3)IKOMA Takuya
4)HANDA Hideyuki

(57) Abstract :
A cooler apparatus includes: a coolant passageway; a water pump that circulates coolant in the coolant passageway; a thermostat that includes a heater that heats a temperature sensitive portion; and a controller. The controller is configured to drive the water pump and cause electric current to flow through the heater at a first energization amount when an operation in which the coolant is injected into the coolant passageway is started. The controller is also configured to stop electric current to flow through the heater if the water pump races when the electric current flows through the heater at the first energization amount.

No. of Pages : 22 No. of Claims : 8

(12) PATENT APPLICATION PUBLICATION
(19) INDIA
(22) Date of filing of Application :29/10/2014
(21) Application No.9030/DELNP/2014 A
(43) Publication Date : 22/05/2015

(54) Title of the invention : BENZENE POLYCARBOXYLIC ACID COMPOUNDS AND THEIR USE AS DRUG

(51) International classification :C08H7/00,C07G1/00,C08H8/00
(31) Priority Document No :PA 2012 70159
(32) Priority Date :30/03/2012
(33) Name of priority country :Denmark
(86) International Application No:PCT/DK2013/050092
Filing Date :02/04/2013
(87) International Publication No :WO 2013/143549
(61) Patent of Addition to Application Number :NA
Filing Date :NA
(62) Divisional to Application Number :NA
Filing Date :NA

(71)**Name of Applicant :**
1)RDINNOVATION APS
Address of Applicant :Robert Jacobsens Vej 60 DK 2300 Copenhagen S Denmark
(72)**Name of Inventor :**
1)SHIPOV Valery Pavlovich
2)PIGAREV Evgeny Sergeevich
3)FEDOROS Elena I.

(57) Abstract :
The present invention relates to new benzene polycarboxylic acids compound which is prepared by alkaline oxidation of hydrolyzed lignin. The present invention also relates to the use of the new benzene polycarboxylic acids compound as part of a composite substance where the composite substance is prepared by complexing or encapsulating the new benzene polycarboxylic acid compounds with a metal cation. The present invention also relates to a method for preparing the new benzene polycarboxylic acids compound and for its use in cosmetic nutraceutical and pharmaceutical compositions.

No. of Pages : 64 No. of Claims : 91

(12) PATENT APPLICATION PUBLICATION
(19) INDIA
(22) Date of filing of Application :29/10/2014
(21) Application No.9031/DELNP/2014 A
(43) Publication Date : 22/05/2015

(54) Title of the invention : TRANILAST COMPOSITIONS AND COCRYSTALS

(51) International classification :A61K9/08,A61K9/14,A61K31/196
(31) Priority Document No :61/618639
(32) Priority Date :30/03/2012
(33) Name of priority country :U.S.A.
(86) International Application No :PCT/IB2013/052545
Filing Date :29/03/2013
(87) International Publication No :WO 2013/144916
(61) Patent of Addition to Application Number :NA
Filing Date :NA
(62) Divisional to Application Number :NA
Filing Date :NA

(71)**Name of Applicant :**
1)NUFORMIX LIMITED
Address of Applicant :Cowley Road Edinburgh House St. Johns Innovation Park Cambridge Cambridgeshire CB4 0DS U.K.
(72)**Name of Inventor :**
1)HOLLAND Joanne
2)FRAMPTON Christopher

(57) Abstract :
Mew tranilast complexes and new tranilast cocrystais are disclosed. These include all tranilast nicotinamide complex a 1:1 tranilast nicotinamide cocrystal a 1:1 tranilast saccharin complex a 1:1 tranilast saccharin cocrystal a 1:1 tranilast gentisic acid complex a 1:1 tranilast gentisic acid cocrystal a 1:1 tranilast salicylic acid complex a 1:1 tranilast salicylic acid cocrystal a 1:1 tranilast urea complex a 1:1 tranilast urea cocrystal a 1:1 tranilast 4 amtnoben2oic acid complex a 1:1 tranilast 4 am!nobers2oic acid cocrystal a 1:1 tranilast 2 4 di hydroxybenzoic acid complex and a 1:1 tranilast 2 4 dihydroxybenzoic acid cocrystal. Also disclosed are pharmaceutical compositions containing a tranilast complex or cocrystal of the invention and a pharmaceutically acceptable carrier. Methods of treatment using the tranilast complexes and cocrystais as well as the pharmaceutical compositions are disclosed.

No. of Pages : 69 No. of Claims : 16

(12) PATENT APPLICATION PUBLICATION
(19) INDIA
(22) Date of filing of Application :29/10/2014
(21) Application No.9032/DELNP/2014 A
(43) Publication Date : 22/05/2015

(54) Title of the invention : METHOD OF PUMPING FLUID

(51) International classification :F04B47/00,F04F7/00,E21B43/12
(31) Priority Document No :12163347.3
(32) Priority Date :05/04/2012
(33) Name of priority country :EPO
(86) International Application No :PCT/EP2013/056686
Filing Date :28/03/2013
(87) International Publication No :WO 2013/149932
(61) Patent of Addition to Application Number :NA
Filing Date :NA
(62) Divisional to Application Number :NA
Filing Date :NA

(71)**Name of Applicant :**
1)SPP (BVI) LIMITED
Address of Applicant :Akara Building 24 De Castro Street Wickhams Cay 1 Road Town Tortola VIRGIN ISLANDS
(72)**Name of Inventor :**
1)SAGOV Magomet
2)GRUBYJ Peter

(57) Abstract :
Method of pumping fluid through a tubing (200) by operating a pulse generator (100) at one end of the tubing (200) the pulse generator (100) reciprocates a displacement member (30) at a frequency of less than 3 Hz to generate pressure waves in the fluid which make a pulse converter (300) at the other end of the tubing (200) permit a flow of the fluid into the tubing (200). Further there are disclosed a pulse generator (100) for use in the pumping method and a pump system comprising the pulse generator (100). Said pulse generator (100) comprises: a connector (10) for connecting the pulse generator (100) with a tubing (200) through which fluid is to be pumped; a reciprocally operable displacement member (30, 32,34) for generating pressure waves in the fluid to be pumped said displacement member (30, 32,34) being arranged in a cavity (20); a discharge port (42) for discharging pumped fluid; and a delivery passage (40) for delivering the pumped fluid from the connector (10) to the discharge port (42); and a return passage (50) for returning fluid delivered through the delivery passage (40) to the cavity (20). The displacement member (30,32,34) is arranged in the cavity (20) close to the connector (10) so as to face the connector (10).

No. of Pages : 32 No. of Claims : 18

(12) PATENT APPLICATION PUBLICATION
(21) Application No.9033/DELNP/2014 A
(19) INDIA
(22) Date of filing of Application :29/10/2014
(43) Publication Date : 22/05/2015

(54) Title of the invention : METHOD AND APPARATUS FOR A DUAL MODE BURNER YIELDING LOW NOX EMISSION

(51) International classification :F23D14/00
(31) Priority Document No :61/619771
(32) Priority Date :03/04/2012
(33) Name of priority country :U.S.A.
(86) International Application No :PCT/US2013/034970
Filing Date :02/04/2013
(87) International Publication No :WO 2013/152012
(61) Patent of Addition to Application Number :NA
Filing Date :NA
(62) Divisional to Application Number :NA
Filing Date :NA

(71)**Name of Applicant :**
1)ECLIPSE INC.
Address of Applicant :1665 Elmwood Road Rockford Illinois 61103 U.S.A.
(72)**Name of Inventor :**
1)HONG Jianhui
2)WHEELER John William

(57) Abstract :
A method and apparatus for a burner adapted to heat a furnace or other environment of use. In particular a burner for providing a fuel gas in combination with an oxidant to effect controlled reaction of the fuel gas in a manner to reduce NOx emissions is described. Combustion of the fuel gas is shifted from the burner combustor to a location outside the burner once the temperature within the furnace/radiant tube has reached a sufficient level to complete combustion of the fuel gas.

No. of Pages : 28 No. of Claims : 20

(12) PATENT APPLICATION PUBLICATION
(19) INDIA
(22) Date of filing of Application :30/10/2014
(21) Application No.9081/DELNP/2014 A
(43) Publication Date : 22/05/2015

(54) Title of the invention : METHOD FOR PREPARING VINYL CHLORIDE BASED RESIN BY USING SUSPENSION POLYMERIZATION

(51) International classification :C08F14/06,C08F2/18,C08L27/06
(31) Priority Document No :1020120148176
(32) Priority Date :18/12/2012
(33) Name of priority country :Republic of Korea
(86) International Application No :PCT/KR2013/009113
Filing Date :11/10/2013
(87) International Publication No :WO 2014/098360
(61) Patent of Addition to Application Number :NA
Filing Date :NA
(62) Divisional to Application Number :NA
Filing Date :NA

(71)**Name of Applicant :**
1)LG CHEM LTD.
Address of Applicant :128 Yeoui daero Youngdungpo gu Seoul 150 721 Republic of Korea
(72)**Name of Inventor :**
1)KIM Kun Ji
2)KIM Yong Jin
3)KIM Kyung Hyun

(57) Abstract :
The present invention relates to a method for preparing a vinyl based polymer and a vinyl based copolymer including a vinyl chloride based material through suspension polymerization in which the generation of foam is prevented while maintaining the pressure by slowly increasing the reaction temperature when the pressure starts to drop at a reaction terminal stage. In the method for preparing a vinyl based resin a vinyl chloride based monomer is suspension polymerized to reduce the generation of foam and improve the quality of protrusions thermal stability and the like.

No. of Pages : 14 No. of Claims : 11

(12) PATENT APPLICATION PUBLICATION
(19) INDIA
(22) Date of filing of Application :30/10/2014
(21) Application No.9082/DELNP/2014 A
(43) Publication Date : 22/05/2015

(54) Title of the invention : WELD STRESS COMPENSATION SYSTEM

(51) International classification :B23K37/053
(31) Priority Document No :61/646445
(32) Priority Date :14/05/2012
(33) Name of priority country :U.S.A.
(86) International Application No :PCT/US2013/040963
Filing Date :14/05/2013
(87) International Publication No :WO 2013/173346
(61) Patent of Addition to Application Number :NA
Filing Date :NA
(62) Divisional to Application Number :NA
Filing Date :NA

(71)**Name of Applicant :**
1)UECKER Timothy M.
Address of Applicant :1924 Cape George Road Port Townsend WA 98368 U.S.A.
(72)**Name of Inventor :**
1)UECKER Timothy M.

(57) Abstract :
Weld stress compensation system and method comprising: 1) a primary tube/rod clamp; 2) a secondary tube/rod clamp for selectively and accurately angularly positioning the secondary tube relative to the primary tube. The secondary clamp is transferrable while a secondary tube/rod is clamped therein to: 3) a saddle cutting fixture to produce a concave relieved portion in the end of the secondary tube/rod with flanking flanges that fit precisely over the primary tube at the join intersection; 4) a miter cut fixture for miter cutting of tube/rod ends to fit flat surfaces or conversely cut tubes/rods for angular joins; and 5) a welding fixture for precise angular positioning of a miter cut tube/rod to a deck wall or stair plate. The primary clamp includes an adjustable pressure pad that applies pressure to the side of the primary tube opposite the secondary tube weld join line thereby preventing warping due to weld stresses.

No. of Pages : 30 No. of Claims : 20

(12) PATENT APPLICATION PUBLICATION
(19) INDIA
(22) Date of filing of Application :30/10/2014
(21) Application No.9084/DELNP/2014 A
(43) Publication Date : 22/05/2015

(54) Title of the invention : HUTC MODULATION OF PRO INFLAMMATORY MEDIATORS OF LUNG AND PULMONARY DISEASES AND DISORDERS

(51) International classification :A61K35/48,A61P11/00
(31) Priority Document No :13/471095
(32) Priority Date :14/05/2012
(33) Name of priority country :U.S.A.
(86) International Application No :PCT/US2013/041002
Filing Date :14/05/2013
(87) International Publication No :WO 2013/173376
(61) Patent of Addition to Application Number :NA
Filing Date :NA
(62) Divisional to Application Number :NA
Filing Date :NA

(71)**Name of Applicant :**
1)DEPUY SYNTHES PRODUCTS LLC.
Address of Applicant :325 Paramount Drive Raynham Massachusetts 02767 U.S.A.
(72)**Name of Inventor :**
1)KIHM Anthony J.

(57) Abstract :
This invention encompasses methods pharmaceutical compositions and kits which utilize umbilical cord tissue derived cells for modulating (e.g. reducing) the production of pro inflammatory mediators involved in the pathology of a lung disease disorder and/or injury in a patient having the lung disease disorder and/or injury. The invention also encompasses methods pharmaceutical compositions and kits which utilize umbilical cord tissue derived cells for inhibiting the production of pro inflammatory mediators involved in the pathology of a lung disease disorder and/or injury in a patient having the lung disease disorder and/or injury utilizing umbilical cord tissue derived cells. In one embodiment the umbilical cord tissue derived cells are isolated from human umbilical cord tissue substantially free of blood are capable of self renewal and expansion in culture lack the production of CD117 or CD45 and do not express hTERT or telomerase.

No. of Pages : 120 No. of Claims : 31

(12) PATENT APPLICATION PUBLICATION
(19) INDIA
(22) Date of filing of Application :30/10/2014
(21) Application No.9085/DELNP/2014 A
(43) Publication Date : 22/05/2015

(54) Title of the invention : THERAPEUTIC USE OF CHARDONNAY SEED PRODUCTS

(51) International classification :A61K36/87,A61P9/00,A61P3/04
(31) Priority Document No :61/640622
(32) Priority Date :30/04/2012
(33) Name of priority country :U.S.A.
(86) International Application No :PCT/US2013/038696
Filing Date :29/04/2013
(87) International Publication No :WO 2013/165921
(61) Patent of Addition to Application Number :NA
Filing Date :NA
(62) Divisional to Application Number :NA
Filing Date :NA

(71)**Name of Applicant :**
1)SONOMACEUTICALS LLC
Address of Applicant :421 Aviation Boulevard Santa Rosa California 95403 U.S.A.
2)THE GOVERNMENT OF THE UNITED STATES OF AMERICA as represented by THE SECRETARY OF AGRICULTURE
(72)**Name of Inventor :**
1)ARVIK Torey James
2)LIPSON Rebecca Susan
3)YOKOYAMA Wallace H.

(57) Abstract :
The present disclosure relates to health benefits of Chardonnay seed products.

No. of Pages : 67 No. of Claims : 57

(12) PATENT APPLICATION PUBLICATION
(19) INDIA
(22) Date of filing of Application :30/10/2014
(21) Application No.9087/DELNP/2014 A
(43) Publication Date : 22/05/2015

(54) Title of the invention : COVERING CAP AND MEASURING DEVICE

(51) International classification :A61B5/145,A61B5/1455,A61B5/00
(31) Priority Document No :A 662/2012
(32) Priority Date :08/06/2012
(33) Name of priority country :Austria
(86) International Application No :PCT/AT2013/050112
Filing Date :24/05/2013
(87) International Publication No :WO 2013/181681
(61) Patent of Addition to Application Number :NA
Filing Date :NA
(62) Divisional to Application Number :NA
Filing Date :NA

(71)**Name of Applicant :**
1)HAGL Peter
Address of Applicant :Hetzendorfer Strae 49 A Wien 1120 Austria
(72)**Name of Inventor :**
1)HAGL Peter

(57) Abstract :
The invention relates to a covering cap (10) in particular for placing on a skin analyser comprising an end wall (1) bounded by a circumferential edge (4) and a circumferential wall (2) adjoining the circumferential edge (4) of the end wall (1) wherein at least one part of the covering cap (10) has a thickness (d) that is less than the thickness (d) of the circumferential wall (2) in a portion (9) of the circumferential wall (2) that lies in the region or end of the circumferential wall (2) remote from the end wall (1) wherein the end wall (1) is of gas permeable design.

No. of Pages : 46 No. of Claims : 32

(12) PATENT APPLICATION PUBLICATION
(21) Application No.8987/DELNP/2014 A
(19) INDIA
(22) Date of filing of Application :28/10/2014
(43) Publication Date : 22/05/2015

(54) Title of the invention : REMOVAL DEVICE FOR A FLUID

(51) International classification :F25B40/00,F25B45/00
(31) Priority Document No :10 2012 207 650.6
(32) Priority Date :08/05/2012
(33) Name of priority country :Germany
(86) International Application No :PCT/EP2013/059176
Filing Date :02/05/2013
(87) International Publication No :WO 2013/167468
(61) Patent of Addition to Application Number :NA
Filing Date :NA
(62) Divisional to Application Number :NA
Filing Date :NA

(71)**Name of Applicant :**
1)INFICON GMBH
Address of Applicant :Bonner Strasse 498 50968 Kln Germany
(72)**Name of Inventor :**
1)RABE Gerd H.

(57) Abstract :
The invention relates to a removal device (10) for removing a fluid from a refrigeration system comprising a cooling device (11) through which the fluid is to flow and which has a pipeline assembly (12) which has a plurality of pipeline elements (24,26) connected to each other a fluid inlet (28) arranged above the pipeline elements and a fluid outlet (30) arranged below the pipeline elements the removal device having a compressor (14) which is arranged before the cooling device (11) in the flow direction and through which the fluid can flow and which is connected to the fluid inlet (28) is easier to clean because the pipeline elements are each arranged at an inclination of an angle (a) from the horizontal in such a way that all fluid entering through the fluid inlet (28) is moved to the fluid outlet (30) by gravity.

No. of Pages : 14 No. of Claims : 10

(12) PATENT APPLICATION PUBLICATION
(21) Application No.8988/DELNP/2014 A
(19) INDIA
(22) Date of filing of Application :28/10/2014
(43) Publication Date : 22/05/2015

(54) Title of the invention : INTRAOCULAR PRESSURE MEASURING AND/OR MONITORING SYSTEM WITH INERTIAL AND/OR ENVIRONMENTAL SENSOR

(51) International classification :A61B3/16
(31) Priority Document No :NA
(32) Priority Date : -
(33) Name of priority country :Switzerland
(86) International Application No :PCT/EP2012/059413
Filing Date :21/05/2012
(87) International Publication No :WO 2013/174414
(61) Patent of Addition to Application Number :NA
Filing Date :NA
(62) Divisional to Application Number :NA
Filing Date :NA

(71)**Name of Applicant :**
1)SENSIMED SA
Address of Applicant :Route de Chavannes 37 CH 1007 Lausanne Switzerland
(72)**Name of Inventor :**
1)LEONARDI Matteo
2)WISMER Jean Marc

(57) Abstract :
Intraocular pressure measuring and/or monitoring system comprising an intraocular pressure measuring device (1) comprising a support (3) and a pressure sensor (2) united with the support (3) the support (3) being configured for placing the pressure sensor (2) in contact with an eye (8) of a user for sensing the intraocular pressure (IOP) of the eye (8) a portable recording device (6) configured for communicating with the intraocular pressure measuring device (1) and for storing data received from the intraocular pressure measuring device (1) wherein the system further comprises an inertial and/or environmental sensor (9). Intraocular pressure measuring device (1) comprising a support (3) and a pressure sensor (2) united with the support (3) the support (3) being configured for placing the pressure sensor (2) in contact with an eye (8) of a user for sensing the intraocular pressure (IOP) of the eye (8) wherein the device further comprises an inertial and/or environmental sensor (9).

No. of Pages : 24 No. of Claims : 15

(12) PATENT APPLICATION PUBLICATION
(19) INDIA
(22) Date of filing of Application :28/10/2014
(21) Application No.8991/DELNP/2014 A
(43) Publication Date : 22/05/2015

(54) Title of the invention : MIXING DEVICE FOR OPEN CHANNEL UV WATER TREATMENT PLANTS

(51) International classification :B01F5/06,C02F1/32
(31) Priority Document No :10 2012 008 732.2
(32) Priority Date :04/05/2012
(33) Name of priority country :Germany
(86) International Application No :PCT/EP2013/000653
Filing Date :06/03/2013
(87) International Publication No :WO 2013/164048
(61) Patent of Addition to Application Number :NA
Filing Date :NA
(62) Divisional to Application Number :NA
Filing Date :NA

(71)**Name of Applicant :**
1)XYLEM WATER SOLUTIONS HERFORD GMBH
Address of Applicant :Boschstrasse 4 14 32051 Herford Germany
(72)**Name of Inventor :**
1)MORNINGSTAR Leroy Jack Jr.
2)K„MMERER Sven

(57) Abstract :
The invention relates to a mixing device for an open channel water treatment plant. Said mixing device comprises a main member (2) which is plate shaped or strip shaped in order to be attached to a channel wall in such a way that the main member has a bottom face (6) facing the channel wall during operation and a top face (5) facing away from the channel wall during operation. A plurality of projections (3) is provided which extend from the main member (2) pointing away from the bottom face (6) and extending beyond a plane formed by the top face (5). Furthermore a plurality of recesses (4) is provided which are respectively located between two adjacent projections (3).

No. of Pages : 19 No. of Claims : 11

(12) PATENT APPLICATION PUBLICATION
(19) INDIA
(22) Date of filing of Application :31/10/2014
(21) Application No.9120/DELNP/2014 A
(43) Publication Date : 22/05/2015

(54) Title of the invention : VENTILATION FILTER EQUIPPED WITH ADHESIVE LAYER ENDOWED WITH OIL REPELLENT PROPERTIES

(51) International classification :B01D39/16,B01D69/06,B01D71/36
(31) Priority Document No :2012087049
(32) Priority Date :06/04/2012
(33) Name of priority country :Japan
(86) International Application No :PCT/JP2013/002291
Filing Date :02/04/2013
(87) International Publication No :WO 2013/150782
(61) Patent of Addition to Application Number :NA
Filing Date :NA
(62) Divisional to Application Number :NA
Filing Date :NA

(71)**Name of Applicant :**
1)NITTO DENKO CORPORATION
Address of Applicant :1 2 Shimohozumi 1 chome Ibaraki shi Osaka 5678680 Japan
(72)**Name of Inventor :**
1)MARUOKA Nobuaki
2)IKEYAMA Yoshiki
3)MASUDA Ryota
4)ONOHARA Asuka

(57) Abstract :
A ventilation filter equipped with an adhesive layer provided with a porous film having a surface coated by an oil repellent agent and an adhesive layer disposed on the surface the ventilation filter equipped with an adhesive layer endowed with oil repellent properties wherein a straight chain fluorine containing hydrocarbon group included in the oil repellent agent is represented by the formula RCFCHCF (1) or the formula RCF (2). Here R and R are each independently a C C alkylene group or phenylene group. This ventilation filter is endowed with oil repellent properties and adhesion thereof to the adhesive layer does not decrease.

No. of Pages : 18 No. of Claims : 7

(12) PATENT APPLICATION PUBLICATION
(19) INDIA
(22) Date of filing of Application :30/10/2014
(21) Application No.9095/DELNP/2014 A
(43) Publication Date : 22/05/2015

(54) Title of the invention : CONTROL CIRCUITRY MODULE GROUP, ELECTRIC DEVICE, AND MODEM DEVICE.

(51) International classification :G06F1/26,H04B3/54
(31) Priority Document No :201210102264.9
(32) Priority Date :10/04/2012
(33) Name of priority country :China
(86) International Application No :PCT/IB2013/052795
Filing Date :08/04/2013
(87) International Publication No :WO 2013/153502
(61) Patent of Addition to Application Number :NA
Filing Date :NA
(62) Divisional to Application Number :NA
Filing Date :NA

(71)**Name of Applicant :**
1)TYCO ELECTRONICS (SHANGHAI) CO. LTD.
Address of Applicant :Level 1 No. 142 He Dan Road Waigaoqiao Free Trade Zone Shanghai 200233 China
2)TYCO ELECTRONICS UK LTD
(72)**Name of Inventor :**
1)FAN Mingjie
2)LIU Junying
3)SONG Yuming
4)ZHU Donghua

(57) Abstract :
The present invention relates to a control circuitry module group an electrical device and a modem device. The control circuitry module group is configured for communication and/or power supply between a master control module (101) and at least one slave module (109) in an electrical device. The control circuitry module group comprises: a bus (105); a bus control module (107) coupled to a master control module (101) and the bus (105) configured to receive a control signal from the master control module add a target address in the control signal and send to the bus the control signal with the target address; and at least one slave control module (109) each coupled to a corresponding slave module (103) and the bus respectively and configured to receive the control signal with the target address via the bus and controlg power supply to the slave module in response to the control signal.

No. of Pages : 26 No. of Claims : 18

(12) PATENT APPLICATION PUBLICATION
(19) INDIA
(22) Date of filing of Application :30/10/2014
(21) Application No.9096/DELNP/2014 A
(43) Publication Date : 22/05/2015

(54) Title of the invention : SUPERVISORY CONTROL OF AUTOMATED IRRIGATION CHANNELS

(51) International classification :G05B19/00,E03B11/00
(31) Priority Document No :2012901378
(32) Priority Date :05/04/2012
(33) Name of priority country :Australia
(86) International Application No :PCT/AU2013/000355
Filing Date :05/04/2013
(87) International Publication No :WO 2013/149304
(61) Patent of Addition to Application Number :NA
Filing Date :NA
(62) Divisional to Application Number :NA
Filing Date :NA

(71)**Name of Applicant :**
1)RUBICON RESEARCH PTY LTD
Address of Applicant :1 Cato Street Hawthorn Victoria 3122 Australia
2)THE UNIVERSITY OF MELBOURNE
(72)**Name of Inventor :**
1)CHOY Sumith
2)CANTONI Michael William
3)DOWER Peter Maxwell
4)KEARNEY Michael Peter

(57) Abstract :
The invention provides a method of delivery of fluid to at least one customer (114) through a computer controlled fluid network (100). The fluid network (100) has a plurality of regulators to control the flow of fluid along the fluid network (100) to deliver a predetermined amount of fluid to at least one customer (114). The network (100) includes a first control system (102) for opening and closing the regulators under computer control. The first control system (102) collects data based on timed measurements of fluid levels upstream and downstream of respective regulators and the opening positions of respective regulators using data analysis to provide respective models for prediction of respective fluid levels between regulators. A second control system (104) that is a supervisory layer interacting with the first control system (102) to provide adjustments to the controlling of the regulators by the first control system (102) based on constraint and future flow load. A third control system interacting with the first (102) and second (104) control systems. The third control system (106) processing fluid delivery requests the at least one customer (114) to provide a flow load delivery schedule (118) based on the hydraulic capacity of the fluid network.

No. of Pages : 18 No. of Claims : 10

(12) PATENT APPLICATION PUBLICATION
(19) INDIA
(22) Date of filing of Application :30/10/2014
(21) Application No.9097/DELNP/2014 A
(43) Publication Date : 22/05/2015

(54) Title of the invention : CRYSTALLIZATION METHODS FOR PURIFICATION OF MONOCLONAL ANTIBODIES

(51) International classification :A61K39/395,C07K16/16
(31) Priority Document No :61/645855
(32) Priority Date :11/05/2012
(33) Name of priority country :U.S.A.
(86) International Application No :PCT/EP2013/059696
Filing Date :10/05/2013
(87) International Publication No :WO 2013/167720
(61) Patent of Addition to Application Number :NA
Filing Date :NA
(62) Divisional to Application Number :NA
Filing Date :NA

(71)**Name of Applicant :**
1)NOVARTIS AG
Address of Applicant :Lichtstrasse 35 CH 4056 Basel Switzerland
(72)**Name of Inventor :**
1)HEKMAT Dariusch
2)HELK Bernhard
3)SCHULZ Henk Konrad
4)SMEJKAL Benjamin

(57) Abstract :
This disclosure relates to methods for crystallization of antibodies from cell free culture supernatant.

No. of Pages : 43 No. of Claims : 21

(12) PATENT APPLICATION PUBLICATION
(19) INDIA
(22) Date of filing of Application :30/10/2014
(21) Application No.9098/DELNP/2014 A
(43) Publication Date : 22/05/2015

(54) Title of the invention : DOSAGE AND ADMINISTRATION OF MONOSPECIFIC AND BISPECIFIC ANTI IGF 1R AND ANTI ERBB3 ANTIBODIES

(51) International classification	:A61K39/395,A61P35/00,A61K45/06
(31) Priority Document No	:61/619258
(32) Priority Date	:02/04/2012
(33) Name of priority country	:U.S.A.
(86) International Application No	:PCT/US2013/035013
Filing Date	:02/04/2013
(87) International Publication No	:WO 2013/152034
(61) Patent of Addition to Application Number	:NA
Filing Date	:NA
(62) Divisional to Application Number	:NA
Filing Date	:NA

(71)**Name of Applicant :**
1)MERRIMACK PHARMACEUTICALS INC.
Address of Applicant :One Kendall Square Suite B7201 Cambridge MA 02139 U.S.A.
(72)**Name of Inventor :**
1)LUGOVSKOY Alexey Alexandrovich
2)BAUM Jason
3)ADAMS Sharlene
4)JOHNSON Bryan
5)TANG Jian

(57) Abstract :
Provided are methods for the administration of therapeutic bispecific anti IGF lR and anti ErbB3 antibodies either alone or in combination with other anti cancer therapeutics.

No. of Pages : 48 No. of Claims : 69

(12) PATENT APPLICATION PUBLICATION
(19) INDIA
(22) Date of filing of Application :30/10/2014
(21) Application No.9099/DELNP/2014 A
(43) Publication Date : 22/05/2015

(54) Title of the invention : A LAUNDRY DETERGENT COMPOSITION COMPRISING A PARTICLE HAVING HUEING AGENT AND CLAY

(51) International classification :C11D3/12,C11D3/40,C11D17/00
(31) Priority Document No :61/644466
(32) Priority Date :09/05/2012
(33) Name of priority country :U.S.A.
(86) International Application No :PCT/US2013/040017
Filing Date :08/05/2013
(87) International Publication No :WO 2013/169828
(61) Patent of Addition to Application Number :NA
Filing Date :NA
(62) Divisional to Application Number :NA
Filing Date :NA

(71)**Name of Applicant :**
1)THE PROCTER & GAMBLE COMPANY
Address of Applicant :One Procter & Gamble Plaza Cincinnati Ohio 45202 U.S.A.
(72)**Name of Inventor :**
1)STENGER Patrick Christopher
2)MIRACLE Gregory Scot
3)MOON Andrew Philip
4)MCDONNELL Michael
5)FERNANDES Gregory Edward
6)VALENTI Dominick Joseph

(57) Abstract :
A laundry detergent composition having a particle wherein the particle has: (a) hueing agent wherein the hueing agent has the following structure: (Formula) wherein: R and R are independently selected from the group consisting of: H; alkyl; alkoxy; alkyleneoxy; alkyl capped alkyleneoxy; urea; and amido; R3 is a substituted aryl group; X is a substituted group comprising sulfonamide moiety and optionally an alkyl and/or aryl moiety and wherein the substituent group comprises at least one alkyleneoxy chain that comprises an average molar distribution of at least four alkyleneoxy moieties; (b) clay; and (c) another detergent ingredient.

No. of Pages : 53 No. of Claims : 18

(12) PATENT APPLICATION PUBLICATION
(21) Application No.9110/DELNP/2014 A
(19) INDIA
(22) Date of filing of Application :30/10/2014
(43) Publication Date : 22/05/2015

(54) Title of the invention : SYSTEM AND METHOD FOR CONTROLLING ELEVATOR SYSTEM ACCESS

(51) International classification :B66B1/06,B66B1/46
(31) Priority Document No :NA
(32) Priority Date :NA
(33) Name of priority country :NA
(86) International Application No :PCT/US2012/043696
Filing Date :22/06/2012
(87) International Publication No :WO 2013/191705
(61) Patent of Addition to Application Number :NA
Filing Date :NA
(62) Divisional to Application Number :NA
Filing Date :NA

(71)**Name of Applicant :**
1)OTIS ELEVATOR COMPANY
Address of Applicant :10 Farm Springs Farmington Connecticut 06032 U.S.A.
(72)**Name of Inventor :**
1)DePAOLA Peter
2)JOYCE Matthew

(57) Abstract :
An exemplary elevator system includes at least one elevator car. An access controller is configured to provide an access credential to a portable wireless communication device responsive to a request from that device indicating a desire for at least access to the elevator system. The access credential at least temporarily indicates that the desired access should be granted. A credential receiver is configured to obtain the provided access credential from the portable wireless communication device. An entry device allows the desired access responsive to the credential receiver obtaining the access credential.

No. of Pages : 17 No. of Claims : 24

(12) PATENT APPLICATION PUBLICATION
(19) INDIA
(22) Date of filing of Application :30/10/2014
(21) Application No.9111/DELNP/2014 A
(43) Publication Date : 22/05/2015

(54) Title of the invention : STEERING CIRCUIT WITH BYPASS VALVE

(51) International classification :B62D5/06
(31) Priority Document No :61/640215
(32) Priority Date :30/04/2012
(33) Name of priority country :U.S.A.
(86) International Application No :PCT/US2013/037688
Filing Date :23/04/2013
(87) International Publication No :WO 2013/165737
(61) Patent of Addition to Application Number :NA
Filing Date :NA
(62) Divisional to Application Number :NA
Filing Date :NA

(71)**Name of Applicant :**
1)EATON CORPORATION
Address of Applicant :Mail Code 4N 1000 Eaton Blvd. Cleveland OH 44122 U.S.A.
(72)**Name of Inventor :**
1)DURGE Akshay Avinash

(57) Abstract :
A steering circuit includes a fluid pump having an inlet in communication with a reservoir and an outlet. An actuator is in selective communication with the fluid pump. A steering unit defines a fluid inlet port in fluid communication with the fluid pump a fluid outlet port in fluid communication with the fluid pump and first and second control ports in fluid communication with the actuator. The steering unit includes a valve assembly having an open center neutral position that provides fluid communication between the fluid inlet port and the fluid outlet port and a fluid meter. A pressure relieving valve provides fluid communication between the outlet of the fluid pump and the reservoir when fluid pressure exceeds a threshold value. A bypass valve provides selective fluid communication between the outlet of the fluid pump and the reservoir. The bypass valve is disposed in parallel to the pressure relieving valve.

No. of Pages : 21 No. of Claims : 20

(12) PATENT APPLICATION PUBLICATION
(19) INDIA
(22) Date of filing of Application :30/10/2014
(21) Application No.9112/DELNP/2014 A
(43) Publication Date : 22/05/2015

(54) Title of the invention : METHODS FOR MIXING PRODUCTS USING ACOUSTIC MIXING

(51) International classification :A23L3/02,B01F11/00,B65B55/02
(31) Priority Document No :61/641542
(32) Priority Date :02/05/2012
(33) Name of priority country :U.S.A.
(86) International Application No :PCT/IB2013/053416
Filing Date :30/04/2013
(87) International Publication No :WO 2013/164766
(61) Patent of Addition to Application Number :NA
Filing Date :NA
(62) Divisional to Application Number :NA
Filing Date :NA

(71)**Name of Applicant :**
1)NESTEC S.A.
Address of Applicant :Avenue Nestle 55 CH 1800 Vevey Switzerland
(72)**Name of Inventor :**
1)BATMAZ Ediz

(57) Abstract :
The present disclosure provides methods for manufacturing a shelf stable food product. In a general embodiment the methods include acoustically mixing the food product with an acoustic mixing device during thermal processing of the food product. The methods of the present disclosure provide several advantages including but not limited to rapid achievement of a uniform temperature distribution during thermal processing retention of nutrient content and organoleptic properties of the food product and retention of particle integrity in the food product during and after mixing.

No. of Pages : 19 No. of Claims : 22

(12) PATENT APPLICATION PUBLICATION
(21) Application No.9113/DELNP/2014 A
(19) INDIA
(22) Date of filing of Application :30/10/2014
(43) Publication Date : 22/05/2015

(54) Title of the invention : METHOD FOR OPERATING A SURROUNDINGS SENSING SYSTEM OF A VEHICLE AND SURROUNDINGS SENSING SYSTEM

(51) International classification :G01S15/93
(31) Priority Document No :10 2012 212 902.2
(32) Priority Date :24/07/2012
(33) Name of priority country :Germany
(86) International Application No :PCT/EP2013/061526
Filing Date :05/06/2013
(87) International Publication No :WO 2014/016027
(61) Patent of Addition to Application Number :NA
Filing Date :NA
(62) Divisional to Application Number :NA
Filing Date :NA

(71)**Name of Applicant :**
1)ROBERT BOSCH GMBH
Address of Applicant :Postfach 30 02 20 70442 Stuttgart Germany
(72)**Name of Inventor :**
1)REICHE Martin

(57) Abstract :
The invention relates to a method for operating a surroundings sensing system (1) of a vehicle (30) having at least two transceiver units (2,32,33 ,34) wherein the transceiver units (2,32,33,34) emit wave pulses (12,13) and receive echo signals of the emitted wave pulses (12,13) which are reflected by reflection sources (38) which are located in range of the transceiver units (2,32 ,33,34) wherein reception wave pulses (12,13) are determined from the received echo signals and an emitted wave pulse (12,13) is determined for a reception wave pulse (12,13) said emitted wave pulse (12,13) corresponding to the reception wave pulse (12,13). There is provision here that in order to encode different wave pulses the wave pulses (12,13) of transceiver units (2,32,33,34) which differ on a pair basis have pulse lengths (T1,T2) which differ on a pair basis and the received echo signals are demodulated in an incoherent fashion and a pulse crest (14,15) for a reception wave pulse (12,13) is determined and a pulse length (T1,T2) of the reception wave pulse (12,13) is standardized to the pulse crest (14,15). The subject matter of the invention also comprises a surroundings sensing system and a computer program which are suitable for carrying out the method.

No. of Pages : 17 No. of Claims : 10

(12) PATENT APPLICATION PUBLICATION
(19) INDIA
(22) Date of filing of Application :27/10/2014
(21) Application No.8982/DELNP/2014 A
(43) Publication Date : 22/05/2015

(54) Title of the invention : OLIGONUCLEOTIDE CHELATE COMPLEX METHODS

(51) International classification :A61K31/7088,A61K31/7115,A61K31/712
(31) Priority Document No :61/648694
(32) Priority Date :18/05/2012
(33) Name of priority country :U.S.A.
(86) International Application No :PCT/CA2013/050378
Filing Date :17/05/2013
(87) International Publication No :WO 2013/170385
(61) Patent of Addition to Application Number :NA
Filing Date :NA
(62) Divisional to Application Number :NA
Filing Date :NA

(71)**Name of Applicant :**
1)REPLICOR INC.
Address of Applicant :Suite D 101 6100 Royalmount Avenue Montral Qubec H4P 2R2 Canada
(72)**Name of Inventor :**
1)BAZINET Michel
2)VAILLANT Andrew

(57) Abstract :
It is described pharmaceutical compositions and methods for the treatment of viral infections hypercholesterolemia hypertriglyceridemia Alzheimer s disease prion disease and Duchene s muscular dystrophy with oligonucleotide chelate complexes.

No. of Pages : 58 No. of Claims : 70

(12) PATENT APPLICATION PUBLICATION
(19) INDIA
(22) Date of filing of Application :28/10/2014
(21) Application No.8984/DELNP/2014 A
(43) Publication Date : 22/05/2015

(54) Title of the invention : METHOD FOR PRODUCING A RECOMBINANT PEPTIDE AND RESULTANT PEPTIDE

(51) International classification :C07K5/08,C07K5/10,C07K7/06
(31) Priority Document No :2012111965
(32) Priority Date :28/03/2012
(33) Name of priority country :Russia
(86) International Application No:PCT/RU2013/000433
Filing Date :28/05/2013
(87) International Publication No :WO 2013/151467
(61) Patent of Addition to Application Number :NA
Filing Date :NA
(62) Divisional to Application Number :NA
Filing Date :NA

(71)**Name of Applicant :**
1)OBSHCHESTVO S OGRANICHENNOY OTVETSTVENNOSTIYU IVIX
Address of Applicant :Stolovyi per. 6/2 Moscow 121069 Russia
(72)**Name of Inventor :**
1)MYASOEDOV Nikolay Fedorovich
2)ANDREEVA Lyudmila Alexandrovna
3)GOLIKOV Dmitriy Viktorovich

(57) Abstract :
The invention relates to biochemistry and biotechnology and is directed to producing peptides with sex- and sexual- fimction-stimulating activity of general formula: A-Thr-Lys-Pro-B-C-D-X, where A is 0, Met, Met(0), Thr, Ala, His, Phe, Lys, ARG PRO GL PRO Gly, B is 0, Gly, Asp, Trp, Gin, Asn, Tyr, BOc -он H - Pro, Arg, C is 0, Arg, Phe, Tyr, Gly, His, BOC- Pro, Lys, D is 0, Val, Gly, Tyr, Trp, Phe, His, X is OH, OCH3, NH , where 0 is the ab- B C- 3 H- - Bzl sence of an amino acid residue, under the BO C- OBzl condition that, if A0, then B and/or C and/or D), and if B), then C and/or D), O H- OBzl excluding the peptides Phe-Thr-Lys-Pro- N0 BOC OBzl Gly, Thr-Lys-Pro-Pro-Arg, Thr-Lys-Pro- < O, VI Arg-Gly. The invention is also directed to a BOC H method for producing the peptides men- H- -OH tioned by genetic engineering methods.

No. of Pages : 91 No. of Claims : 2

(12) PATENT APPLICATION PUBLICATION
(19) INDIA
(22) Date of filing of Application :28/10/2014
(21) Application No.8985/DELNP/2014 A
(43) Publication Date : 22/05/2015

(54) Title of the invention : ABSORBENT ARTICLE

(51) International classification :A61F13/15,A61F13/49,A61F13/53
(31) Priority Document No :2012086982
(32) Priority Date :06/04/2012
(33) Name of priority country :Japan
(86) International Application No :PCT/JP2013/060067
Filing Date :02/04/2013
(87) International Publication No :WO 2013/151039
(61) Patent of Addition to Application Number :NA
Filing Date :NA
(62) Divisional to Application Number :NA
Filing Date :NA

(71)**Name of Applicant :**
1)UNICHARM CORPORATION
Address of Applicant :182 Shimobun Kinsei cho Shikokuchuo shi Ehime 7990111 Japan
(72)**Name of Inventor :**
1)TERASOMA Nozomi
2)TANIO Toshiyuki

(57) Abstract :
This absorbent article is provided with a liquid permeable top sheet (10) a liquid impermeable back sheet (20) and an absorption sheet (30) including a pulp. A plurality of holes (31) perforating from the top sheet side toward the back sheet side are formed in the absorption sheet and the top sheet is arranged so as to cover the holes of the absorption sheet. The absorption sheet includes a plurality of first regions (R1) bonded to the back sheet in the periphery of the holes and second regions (R2) between the plurality of first regions. At least part of the second regions is spaced apart from the back sheet and arranged closer to the top sheet than the first regions.

No. of Pages : 17 No. of Claims : 5

(12) PATENT APPLICATION PUBLICATION
(19) INDIA
(22) Date of filing of Application :28/10/2014
(21) Application No.8986/DELNP/2014 A
(43) Publication Date : 22/05/2015

(54) Title of the invention : DISPOSABLE DIAPER

(51) International classification :A61F13/15,A61F13/49
(31) Priority Document No :2012104151
(32) Priority Date :27/04/2012
(33) Name of priority country :Japan
(86) International Application No :PCT/JP2013/062239
Filing Date :25/04/2013
(87) International Publication No :WO 2013/161951
(61) Patent of Addition to Application Number :NA
Filing Date :NA
(62) Divisional to Application Number :NA
Filing Date :NA

(71)**Name of Applicant :**
1)UNICHARM CORPORATION
Address of Applicant :182 Shimobun Kinsei cho Shikokuchuo shi Ehime 7990111 Japan
(72)**Name of Inventor :**
1)SAKAGUCHI Satoru
2)YAMANAKA Yasuhiro
3)OKUBO Tetsuo

(57) Abstract :
This disposable diaper (10) is configured in a manner so that the end (E2) at the front torso encircling region (20) side of an extendable/contractable range in a leg extension/contraction section (75) is more proximal to the end (E4) at the front torso encircling region (20) side of the disposable diaper (10) than the end (E3) at the front torso encircling region (20) side of an extendable/contractable range of a crotch extension/contraction section (200a). The end (E5) at the back torso encircling region (30) side of the extendable/contractable range in the leg extension/contraction section (75) is configured in a manner so as to be more proximal to the end (E7) at the back torso encircling region (30) side of the disposable diaper (10) than the end (E6) at the back torso encircling region (30) side of the extendable/contractable range of the crotch extension/contraction section (200a). The tensile modulus of the crotch extension/contraction section (200a) is greater than the tensile modulus of the leg extension/contraction section (75).

No. of Pages : 21 No. of Claims : 6

(12) PATENT APPLICATION PUBLICATION
(21) Application No.9137/DELNP/2014 A
(19) INDIA
(22) Date of filing of Application :31/10/2014
(43) Publication Date : 22/05/2015

(54) Title of the invention : AQUEOUS ASSEMBLY AND CONTROL METHOD

(51) International classification :G01D3/10
(31) Priority Document No :61/620735
(32) Priority Date :05/04/2012
(33) Name of priority country :U.S.A.
(86) International Application No :PCT/US2013/031837
Filing Date :15/03/2013
(87) International Publication No :WO 2013/187974
(61) Patent of Addition to Application Number :NA
Filing Date :NA
(62) Divisional to Application Number :NA
Filing Date :NA

(71)**Name of Applicant :**
1)SHINE MEDICAL TECHNOLOGIES INC.
Address of Applicant :2555 Industrial Drive Monona WI 53713 U.S.A.
(72)**Name of Inventor :**
1)PIEFER Gregory
2)VAN ABEL Eric N.

(57) Abstract :
An aqueous assembly has a negative coefficient of reactivity with a magnitude. The aqueous assembly includes a vessel and an aqueous solution with a fissile solute supported in the vessel. A reactivity stabilizer is disposed within the aqueous solution to reduce the magnitude of the negative coefficient of reactivity of the aqueous assembly during operation of the aqueous assembly.

No. of Pages : 22 No. of Claims : 20

(12) PATENT APPLICATION PUBLICATION
(21) Application No.9103/DELNP/2014 A
(19) INDIA
(22) Date of filing of Application :30/10/2014
(43) Publication Date : 22/05/2015

(54) Title of the invention : FREQUENCY SPECIFIC SENSORY STIMULATION

(51) International classification :A61M21/02,A61N5/06,A61H23/00
(31) Priority Document No :61/621389
(32) Priority Date :06/04/2012
(33) Name of priority country :U.S.A.
(86) International Application No :PCT/US2013/035625
Filing Date :08/04/2013
(87) International Publication No :WO 2013/152348
(61) Patent of Addition to Application Number :NA
Filing Date :NA
(62) Divisional to Application Number :NA
Filing Date :NA

(71)**Name of Applicant :**
1)NEWPORT BRAIN RESEARCH LABORATORY INC.
Address of Applicant :1601 Dove St #299 Newport Beach CA 92660 U.S.A.
(72)**Name of Inventor :**
1)JIN Yi

(57) Abstract :
One or more sensory auditory and/or visual stimuli are presented to a subject at a specific frequency that is equal to or a harmonic of the intrinsic frequency of one or more of the subject s biological signals. The purpose is to indirectly (through the eyes ears or touch) provide frequency coupling among different organs (e.g. heart brain breathing and gastrointestinal movement) through rhythmic entrainment. The specific harmonic chosen is the one closest to the interested EEG frequency. The interested frequency is chosen based on the cognitive element or symptom that is targeted. Additionally games and programs (audio video computer) can incorporate Pavlovian cues to facilitate placing the brain in an acceptable state. In one embodiment the ticking sound of a repetitive transcranial stimulation (rTMS) device is played to subconsciously remind the patient of the rTMS treatment and thereby produce a therapeutic effect. Additionally physical stimulus such as tapping or low level electrical stimulation at a predetermined rate will accomplish the same effect.

No. of Pages : 18 No. of Claims : 39

(12) PATENT APPLICATION PUBLICATION
(19) INDIA
(22) Date of filing of Application :30/10/2014
(21) Application No.9104/DELNP/2014 A
(43) Publication Date : 22/05/2015

(54) Title of the invention : SYSTEM AND METHOD FOR DETECTING PRESENCE OF AN OBJECT

(51) International classification :G08B13/24
(31) Priority Document No :61/618130
(32) Priority Date :30/03/2012
(33) Name of priority country :U.S.A.
(86) International Application No :PCT/US2013/033710
Filing Date :25/03/2013
(87) International Publication No :WO 2013/148576
(61) Patent of Addition to Application Number :NA
Filing Date :NA
(62) Divisional to Application Number :NA
Filing Date :NA

(71)**Name of Applicant :**
1)ADT SERVICES GMBH
Address of Applicant :Victor von Bruns Strasse 21 CH 8212 Neuhausen am Rheinfall Switzerland
(72)**Name of Inventor :**
1)ALICOT Jorge F.
2)MOHIUDDIN Mohammad

(57) Abstract :
A system for detecting the presence of an object may include a radio frequency identification (RFID) reader configured to transmit a plurality of interrogation signals a response controller that is configured to receive the plurality of interrogation signals and respond by transmitting a plurality of standard response signals and a mixing element that is configured to generate a mixed signal when in the presence of the plurality of interrogation signals and the standard response signals. The RFID reader outputs an alert signal upon receipt of the mixed signal.

No. of Pages : 20 No. of Claims : 18

(12) PATENT APPLICATION PUBLICATION
(19) INDIA
(22) Date of filing of Application :30/10/2014
(21) Application No.9105/DELNP/2014 A
(43) Publication Date : 22/05/2015

(54) Title of the invention : RTMS DEVICE

(51) International classification :A61N2/02,A61B5/0476
(31) Priority Document No :61/621413
(32) Priority Date :06/04/2012
(33) Name of priority country :U.S.A.
(86) International Application No :PCT/US2013/035664
Filing Date :08/04/2013
(87) International Publication No :WO 2013/152355
(61) Patent of Addition to Application Number :NA
Filing Date :NA
(62) Divisional to Application Number :NA
Filing Date :NA

(71)**Name of Applicant :**
1)NEWPORT BRAIN RESEARCH LABORATORY INC.
Address of Applicant :1601 Dove St #299 Newport Beach CA 92660 U.S.A.
(72)**Name of Inventor :**
1)JIN Yi
2)KNEZEVICH Charles
3)SILVETZ Robert D.
4)CHIEN Mark

(57) Abstract :
An rTMS coil or set of coils are designed to affect multiple regions of the brain with synchronous magnetic field pulses. Multiple coils aligned over the targeted regions of interest or a single coil that is stretched or enlarged in a shape that allows the magnetic field to affect the areas of interest are disclosed. Also disclosed is a method of optimizing repetitive transcranial magnetic stimulation (rTMS) treatments.

No. of Pages : 24 No. of Claims : 27

(12) PATENT APPLICATION PUBLICATION
(19) INDIA
(22) Date of filing of Application :30/10/2014
(21) Application No.9106/DELNP/2014 A
(43) Publication Date : 22/05/2015

(54) Title of the invention : CENTRALIZED KEY MANAGEMENT IN EMBMS

(51) International classification :H04L29/06,H04W12/04
(31) Priority Document No :61/642169
(32) Priority Date :03/05/2012
(33) Name of priority country :U.S.A.
(86) International Application No :PCT/IB2013/053548
Filing Date :03/05/2013
(87) International Publication No :WO 2013/164803
(61) Patent of Addition to Application Number :NA
Filing Date :NA
(62) Divisional to Application Number :NA
Filing Date :NA

(71)**Name of Applicant :**
1)TELEFONAKTIEBOLAGET L M ERICSSON (PUBL)
Address of Applicant :SE 164 83 Stockholm Sweden
(72)**Name of Inventor :**
1)LEHTOVIRTA Vesa
2)TURCOTTE Eric Joseph
3)SLSSINGAR Michael John
4)NORRMAN Karl

(57) Abstract :
A split architecture eMBMS with distributed BMSCs providing the same eMBMS service allows for a centralized key service where each BMSC is able to derive a set of MTKs from the MSK using the MTK IDs as the differentiating input. This avoids the need to send MTKs to the BMSCs.

No. of Pages : 19 No. of Claims : 21

(12) PATENT APPLICATION PUBLICATION
(21) Application No.9108/DELNP/2014 A
(19) INDIA
(22) Date of filing of Application :30/10/2014
(43) Publication Date : 22/05/2015

(54) Title of the invention : MAGAZINE RELEASE/HOLDING DEVICE FOR A FIREARM AND RESPECTIVE GRIPPING PIECE EQUIPPED THEREWITH AND WEAPON HOUSING OF A FIREARM

(51) International classification :F41A17/38,F41A35/06
(31) Priority Document No :10 2012 019 911.2
(32) Priority Date :11/10/2012
(33) Name of priority country :Germany
(86) International Application No :PCT/EP2013/002909
Filing Date :27/09/2013
(87) International Publication No :WO 2014/056580
(61) Patent of Addition to Application Number :NA
Filing Date :NA
(62) Divisional to Application Number :NA
Filing Date :NA

(71)**Name of Applicant :**
1)HECKLER & KOCH GMBH
Address of Applicant :Heckler & Koch Strasse 1 78727 Oberndorf Germany
(72)**Name of Inventor :**
1)FLUHR Norbert
2)KOHLER Daniel

(57) Abstract :
The invention relates to a magazine release/holding device (1) which can be operated from both sides of a firearm comprising a magazine holding arm (23) and handles (11,13) which protrude from both sides of the firearm for transferring the magazine holding arm (23) from its magazine holding position into its magazine release position and vice versa one of the handles (13) being designed in the manner of a rocker arm the tilting axis of which rests on the weapon housing (3). The magazine release/holding device (1) is characterised in that the magazine holding arm (23) has a longitudinal slot (35) which travels through the magazine holding arm the handle (13) is supported in the longitudinal slot (35) in its magazine holding position and comprises a bulge (41) which penetrates the longitudinal slot in the direction of the weapon housing (3) and which serves as a tilting axis. The invention further relates to a gripping piece and a weapon housing (3) of a firearm which are both equipped with such a magazine release/holding device (1).

No. of Pages : 27 No. of Claims : 13

(12) PATENT APPLICATION PUBLICATION
(19) INDIA
(22) Date of filing of Application :29/10/2014
(21) Application No.9050/DELNP/2014 A
(43) Publication Date : 22/05/2015

(54) Title of the invention : FORMULATIONS AND METHODS FOR DELAYING ONSET OF CHRONIC NEUROPATHIC PAIN

(51) International classification :A61K31/519,A61K31/529,A61K31/573
(31) Priority Document No :61/637156
(32) Priority Date :23/04/2012
(33) Name of priority country :U.S.A.
(86) International Application No :PCT/US2013/037838
Filing Date :23/04/2013
(87) International Publication No :WO 2013/163214
(61) Patent of Addition to Application Number :NA
Filing Date :NA
(62) Divisional to Application Number :NA
Filing Date :NA

(71)**Name of Applicant :**
1)THE CHILDRENS MEDICAL CENTER CORPORATION
Address of Applicant :55 Shattuck Street Boston MA 02115 U.S.A.
(72)**Name of Inventor :**
1)SHANKARAPPA Sahadev Aramanethalgur
2)KOHANE Daniel S.

(57) Abstract :
A dosing regimen for formulations that contain a therapeutic dosage of a site 1 sodium channel blocker where the dosing regimen provides a prolonged nerve block and is in an effective amount to delay the onset of neuropathic pain such as hyperalgesia and/or allodynia for at least one week and preferably longer at the site and preferably the region (e.g. entire limb) where the nerve block was applied. The site 1 sodium channel blocker is preferably saxitoxin (STX) preferably in combination with a corticosteroid preferably dexamethasone. In a preferred embodiment liposomes are included in the formulation as a controlled release system producing prolonged duration of block without systemic toxicity. As demonstrated by the examples encapsulating STX in a controlled release system such as liposomes preferably also including a corticosteroid and administering in suitable dosing regimen to achieve a prolonged nerve block without systemic toxicity delays the onset of hyperalgesia.

No. of Pages : 29 No. of Claims : 22

(12) PATENT APPLICATION PUBLICATION
(21) Application No.9051/DELNP/2014 A
(19) INDIA
(22) Date of filing of Application :29/10/2014
(43) Publication Date : 22/05/2015

(54) Title of the invention : STAINLESS STEEL BRAKE DISC AND METHOD FOR MANUFACTURING SAME

(51) International classification :C22C38/00,C21D9/00,C22C38/54
(31) Priority Document No :2013023415
(32) Priority Date :08/02/2013
(33) Name of priority country :Japan
(86) International Application No :PCT/JP2014/052947
Filing Date :07/02/2014
(87) International Publication No :WO 2014/123229
(61) Patent of Addition to Application Number :NA
Filing Date :NA
(62) Divisional to Application Number :NA
Filing Date :NA

(71)**Name of Applicant :**
1)NIPPON STEEL & SUMIKIN STAINLESS STEEL CORPORATION
Address of Applicant :6 1 Otemachi 2 chome Chiyoda ku Tokyo 1000004 Japan
(72)**Name of Inventor :**
1)TERAOKA Shinichi
2)INOUE Yoshiharu
3)KOYAMA Yuji
4)KOBAYASHI Masaaki
5)TANOUE Toshio

(57) Abstract :
The present invention is a brake disc having excellent toughness corrosion resistance and abrasion resistance the brake disc containing by mass 0.030 0.080% C 0.05 1.0% Si 1.0 1.5% Mn 0.035% or less P 0.015% or less S 11.0 14.0% Cr 0.01 0.50% Ni 0.001 0.15% V less than 0.1% Nb 0.05% or less Ti 0.05% or less Zr 0.05% or less Al 0.015 0.060% N 0.0002 0.0050% B and 0.0080% or less O. The AT value of the formula C + 0.8(N B) is 0.055 0.090 the formula PV = 1.2Ti + 0.8Zr + Nb + 1.1Al + O = 0.1 is satisfied the volume fraction of the ferrite phase in which the IQ value of EBSD is 4000 or greater is 1 15% the Charpy impact value is 50 J/cm or greater and the hardness is 32 38 HRC.

No. of Pages : 39 No. of Claims : 4

(12) PATENT APPLICATION PUBLICATION
(19) INDIA
(22) Date of filing of Application :29/10/2014
(21) Application No.9053/DELNP/2014 A
(43) Publication Date : 22/05/2015

(54) Title of the invention : METHOD FOR PRODUCING SEPIAPTERIN AND TETRAHYDROLACTOYLPTERIN

(51) International classification :C07D475/04,A61K31/519,A61P25/00
(31) Priority Document No :2012105758
(32) Priority Date :07/05/2012
(33) Name of priority country :Japan
(86) International Application No :PCT/JP2013/062817
Filing Date :07/05/2013
(87) International Publication No :WO 2013/168693
(61) Patent of Addition to Application Number :NA
Filing Date :NA
(62) Divisional to Application Number :NA
Filing Date :NA

(71)**Name of Applicant :**
1)SHIRATORI PHARMACEUTICAL CO. LTD.
Address of Applicant :6 11 24 Tsudanuma Narashino shi Chiba 2750016 Japan
(72)**Name of Inventor :**
1)YOSHINO Hiroshi
2)KOMODA Taichi
3)SHIRO Yuichi
4)MURATA Shunichi
5)MURATA Shizuaki
6)KURODA Yasuhiro

(57) Abstract :
Provided is a method for producing sepiapterin lactoylpterin and tetrahydrolactoylpterin. Sepiapterin lactoylpterin and tetrahydrolactoylpterin are obtained at a good yield by the reaction formula.

No. of Pages : 88 No. of Claims : 6

(12) PATENT APPLICATION PUBLICATION
(19) INDIA
(22) Date of filing of Application :31/10/2014
(21) Application No.9150/DELNP/2014 A
(43) Publication Date : 22/05/2015

(54) Title of the invention : SEATING PART OF A VEHICLE SEAT

(51) International classification :B60N2/07,B60N2/16,B60N2/18
(31) Priority Document No :61/643587
(32) Priority Date :07/05/2012
(33) Name of priority country :U.S.A.
(86) International Application No:PCT/IB2013/001403
Filing Date :07/05/2013
(87) International Publication No :WO 2013/167975
(61) Patent of Addition to Application Number :NA
Filing Date :NA
(62) Divisional to Application Number :NA
Filing Date :NA

(71)**Name of Applicant :**
1)JOHNSON CONTROLS TECHNOLOGY COMPANY
Address of Applicant :915 E. 32nd Street Holland MI 49423 U.S.A.
(72)**Name of Inventor :**
1)LINNENBRINK Jorg
2)KIENKE Ingo
3)ROTHSTEIN Gerhard
4)SEIBOLD Kurt
5)BALIN Alexander I.
6)RIEDEL Ulrich

(57) Abstract :
The invention relates to a vehicle seat comprising a seating part provided with a seat base and two lateral parts.

No. of Pages : 17 No. of Claims : 11

(12) PATENT APPLICATION PUBLICATION
(19) INDIA
(22) Date of filing of Application :31/10/2014
(21) Application No.9152/DELNP/2014 A
(43) Publication Date : 22/05/2015

(54) Title of the invention : AL ALLOY PLATED STEEL MATERIAL HAVING HAIRLINE APPEARANCE

(51) International classification	:C23C2/26,B24B21/04,C23C2/12
(31) Priority Document No	:2012117284
(32) Priority Date	:23/05/2012
(33) Name of priority country	:Japan
(86) International Application No	:PCT/JP2013/064363
Filing Date	:23/05/2013
(87) International Publication No	:WO 2013/176219
(61) Patent of Addition to Application Number	:NA
Filing Date	:NA
(62) Divisional to Application Number	:NA
Filing Date	:NA

(71)**Name of Applicant :**
1)NIPPON STEEL & SUMITOMO METAL CORPORATION
Address of Applicant :6 1 Marunouchi 2 chome Chiyoda ku Tokyo 1008071 Japan
(72)**Name of Inventor :**
1)GOTO Yasuto
2)KUROSAKI Masao
3)KUWANA Tatsuya
4)SUDA Hideaki

(57) Abstract :
This Al alloy plated steel material has a hairline appearance in which a hairline is formed on the surface of the plating layer composed of Si with the remainder being Al and impurities wherein the deposition amount of the plating layer is 20 to 100 g/m per surface the Si content in the plating layer overall is 5 to 12 mass% the maximum content of the Si is 12 to 24 mass% in areas in which the thickness of the surface layer of the plating layer is 2 µm and the hairline has a surface roughness Ra of 0.3 to 2.0 µm in the direction perpendicular to the hairline a PPI of 0 at a reference level 300 µin a PPI of less than 10 at a reference level 200 µm and a PPI of 50 or higher at a reference level 30 µm.

No. of Pages : 38 No. of Claims : 5

(12) PATENT APPLICATION PUBLICATION
(19) INDIA
(22) Date of filing of Application :29/10/2014
(21) Application No.9041/DELNP/2014 A
(43) Publication Date : 22/05/2015

(54) Title of the invention : METHODS FOR CONTROLLING (EXTENDING) THE POT LIFE IN CHAIN EXTENDED POLYURETHANE (PU) BASED SYSTEMS

(51) International classification :C08G18/02,C08G18/10,C08G18/66
(31) Priority Document No :12166641.6
(32) Priority Date :03/05/2012
(33) Name of priority country :EPO
(86) International Application No :PCT/EP2013/056153
Filing Date :22/03/2013
(87) International Publication No :WO 2013/164134
(61) Patent of Addition to Application Number :NA
Filing Date :NA
(62) Divisional to Application Number :NA
Filing Date :NA

(71)**Name of Applicant :**
1)RHEIN CHEMIE RHEINAU GMBH
Address of Applicant :D¼sseldorfer Strasse 23 27 68219 Mannheim Germany
(72)**Name of Inventor :**
1)LAUFER Wilhelm
2)ECKERT Armin
3)HAAS Uwe
4)WUERTZ Uwe

(57) Abstract :
The invention relates to novel methods for controlling (extending) the pot life in diamine chain extended polyurethane (PU) based systems preferably PU elastomers PU adhesives and PU casting resins.

No. of Pages : 12 No. of Claims : 4

(12) PATENT APPLICATION PUBLICATION
(19) INDIA
(22) Date of filing of Application :29/10/2014
(21) Application No.9042/DELNP/2014 A
(43) Publication Date : 22/05/2015

(54) Title of the invention : PACKING ELEMENT BACKUP SYSTEM

(51) International classification :E21B33/128,E21B23/06
(31) Priority Document No :13/472128
(32) Priority Date :15/05/2012
(33) Name of priority country :U.S.A.
(86) International Application No :PCT/US2013/040298
Filing Date :09/05/2013
(87) International Publication No :WO 2013/173159
(61) Patent of Addition to Application Number :NA
Filing Date :NA
(62) Divisional to Application Number :NA
Filing Date :NA

(71)**Name of Applicant :**
1)BAKER HUGHES INCORPORATED
Address of Applicant :P.O. Box 4740 Houston Texas 77210 4740 U.S.A.
(72)**Name of Inventor :**
1)BISHOP David S.
2)RUFFO Antonio C.
3)LEHR Douglas J.

(57) Abstract :
Downhole tool packing element systems comprise a sealing element having a support system. The support system can include one or more of a first spacer ring a second spacer ring a third spacer ring a mesh ring and one or more petal rings. One or more of these components can be disposed at one or both of the upper end and/or lower end of the sealing element. When compressed the sealing element is moved radially outward to engage an inner wall surface of a wellbore due to compressive forces of the one or more spacer ring(s) mesh ring and/or petal ring(s). In certain embodiments the lower end of one or more of the mesh ring(s) and/or petal ring(s) rotate outwardly toward the casing and in certain embodiments engage the casing to facilitate creation of the seal.

No. of Pages : 29 No. of Claims : 21

(12) PATENT APPLICATION PUBLICATION
(19) INDIA
(22) Date of filing of Application :29/10/2014
(21) Application No.9043/DELNP/2014 A
(43) Publication Date : 22/05/2015

(54) Title of the invention : SELF CLOSING CONNECTOR

(51) International classification :A61M39/04,A61M39/26
(31) Priority Document No :61/625663
(32) Priority Date :17/04/2012
(33) Name of priority country :U.S.A.
(86) International Application No :PCT/US2013/036962
Filing Date :17/04/2013
(87) International Publication No :WO 2013/158756
(61) Patent of Addition to Application Number :NA
Filing Date :NA
(62) Divisional to Application Number :NA
Filing Date :NA

(71)**Name of Applicant :**
1)DR. PY INSTITUTE LLC
Address of Applicant :201 Housatonic Avenue New Milford CT 06776 U.S.A.
(72)**Name of Inventor :**
1)DR. PY INSTITUTE LLC

(57) Abstract :
An aseptic fluid connector having a male connector and a female connector engageable to aseptically transfer fluid therethrough. The male connector includes a closure and a piercing member comprising a hollow shaft for receiving fluid therein a tip and at least one port in fluid communication with the interior of the hollow shaft for passage of the fluid therethrough. The closure and/or the shaft is movable between (i) a first position wherein the closure closes the port(s) and (ii) a second position opening the port(s). The female connector includes a pierceable septum. The male and female connector are engageable such that the piercing member pierces the pierceable septum. Only when the pierceable member has fully penetrated the pierceable septum can the closure and/or the shaft move from the first position to the second position to aseptically transfer fluid therethrough.

No. of Pages : 43 No. of Claims : 49

(12) PATENT APPLICATION PUBLICATION
(19) INDIA
(22) Date of filing of Application :29/10/2014
(21) Application No.9044/DELNP/2014 A
(43) Publication Date : 22/05/2015

(54) Title of the invention : COMPACTION PLIERS HAVING REMOVABLE CUTTING INSERTS

(51) International classification :A61F2/46
(31) Priority Document No :61/643467
(32) Priority Date :07/05/2012
(33) Name of priority country :U.S.A.
(86) International Application No :PCT/US2013/039649
Filing Date :06/05/2013
(87) International Publication No :WO 2013/169627
(61) Patent of Addition to Application Number :NA
Filing Date :NA
(62) Divisional to Application Number :NA
Filing Date :NA

(71)**Name of Applicant :**
1)SMITH & NEPHEW INC.
Address of Applicant :1450 Brooks Road Memphis Tennessee 38116 U.S.A.
(72)**Name of Inventor :**
1)BOURQUE Bernard Joseph
2)DAVIS William Richard
3)BERUBE Alfred Rodrique Jr.

(57) Abstract :
A bone graft compaction pliers with removable inserts defines a bone graft harvesting and deployment system applicable to a wide variety of bone graft sized for use with bone anchors such as those employed in ACL repair. Cannulated bone anchors for encouraging bone regrowth employ an anchor with a axial cannulated bore and a plurality of fenestrations surrounding the bore to facilitate bone regrowth. A variety of sizes of single use inserts corresponding to a bone graft shape or diameter engage a single compaction pliers for forming various sized bone grafts from a single tool. A transparent transfer tube and corresponding base receives the formed bone graft for length adjustment and engages protrusions on the recipient bone anchor for aligning the transfer tube to the anchor for disposing the bone graft into the cannulated bore of the anchor.

No. of Pages : 30 No. of Claims : 17

(12) PATENT APPLICATION PUBLICATION
(19) INDIA
(22) Date of filing of Application :29/10/2014
(21) Application No.9045/DELNP/2014 A
(43) Publication Date : 22/05/2015

(54) Title of the invention : PROCESS FOR MANUFACTURING A PHARMACEUTICAL DOSAGE FORM COMPRISING NIFEDIPINE AND CANDESARTAN CILEXETIL

(51) International classification :A61K9/20,A61K9/28,A61J3/00
(31) Priority Document No :12167035.0
(32) Priority Date :07/05/2012
(33) Name of priority country :EPO
(86) International Application No :PCT/EP2013/059110
Filing Date :02/05/2013
(87) International Publication No :WO 2013/167453
(61) Patent of Addition to Application Number :NA
Filing Date :NA
(62) Divisional to Application Number :NA
Filing Date :NA

(71)**Name of Applicant :**
1)BAYER PHARMA AKTIENGESELLSCHAFT
Address of Applicant :M¼llerstrasse 178 13353 Berlin Germany
(72)**Name of Inventor :**
1)FUNKE Adrian
2)MEYER G¼nter
3)SMIKALLA Martina
4)MEENERS Andreas
5)WIRGES Markus
6)BROCK Daniela
7)JUST Sarah
8)KLEINEBUDDE Peter
9)KNOP Klaus
10)ZEITLER Jochen Axel
11)BOEGGERING Rolf Anton

(57) Abstract :
The present invention relates to manufacturing processes for the preparation of a pharmaceutical dosage form comprising nifedipine and candesartan cilexetil and optionally at least one diuretic characterized in that nifedipine is released in the body in a controlled (modified) manner and the candesartan cilexetil is released rapidly (immediate release (IR)) and optionally the diuretic is released rapidly (immediate release (IR)) and the pharmaceutical dosage forms obtainable by these processes.

No. of Pages : 80 No. of Claims : 11

(12) PATENT APPLICATION PUBLICATION
(21) Application No.9141/DELNP/2014 A
(19) INDIA
(22) Date of filing of Application :31/10/2014
(43) Publication Date : 22/05/2015

(54) Title of the invention : METHOD FOR MANUFACTURING HIGH PURITY STEEL CASTING AND TUNDISH

(51) International classification :B22D11/10
(31) Priority Document No :2012136779
(32) Priority Date :18/06/2012
(33) Name of priority country :Japan
(86) International Application No :PCT/JP2013/003632
Filing Date :10/06/2013
(87) International Publication No :WO 2013/190799
(61) Patent of Addition to Application Number :NA
Filing Date :NA
(62) Divisional to Application Number :NA
Filing Date :NA

(71)**Name of Applicant :**
1)JFE STEEL CORPORATION
Address of Applicant :2 3 Uchisaiwai cho 2 chome Chiyoda ku Tokyo 1000011 Japan
(72)**Name of Inventor :**
1)FURUMAI Kohei
2)ARAMAKI Norichika
3)MIKI Yuji
4)MURAI Takeshi

(57) Abstract :
A tundish provided with a weir having a wall part and an eaves-shaped part projecting horizontally at the upper edge part of the wall part i s used to float up and separate inclusions i n molten steel in a more reliable and effective manner than in the past. A tundish (1) provided with a weir (7) having a notch (12) at one or more locations, ana having a wall part (8) that extends up - ward so as to surround the molten metal injector : from four directions, and further having an eaves -shaped part (9) that projects hori - zontally at the upper edge part of the wall part, the weir (7) being positioned between a molten steel injector (5) and a molten steel tap hole (6), i s used t o continuously cast steel castings (14) within a range in which the molten steel bath surface height (H) and the flow rate (Q) at which the molten steel i s injected into the tundish satisfy formula (1), where i s the weir height, S i s the area of the upper opening part, L i s the distance from the distal end of the eaves-shaped part to the short- side surface of the tundish, and W i s the distance fiOm the distal end of the eaves-shaped part to the long- side surface of the tundish. Formula (1): 3.50<[(Hh) x(Sp/Q) 1.37] -0.6 +[(7L/6)]x(Sp/Q) 1.37]+[(7W/6)x(Sp/Q) 1.37]<9.50

No. of Pages : 66 No. of Claims : 7

(12) PATENT APPLICATION PUBLICATION
(19) INDIA
(22) Date of filing of Application :31/10/2014
(21) Application No.9142/DELNP/2014 A
(43) Publication Date : 22/05/2015

(54) Title of the invention : CONTROLLING BIAS VOLTAGES FOR OPTICAL MODULATORS

(51) International classification :G02F1/01,G02F1/225,G02F1/21
(31) Priority Document No :12275057.3
(32) Priority Date :02/05/2012
(33) Name of priority country :EPO
(86) International Application No :PCT/GB2013/051112
Filing Date :30/04/2013
(87) International Publication No:WO 2013/164603
(61) Patent of Addition to Application Number :NA
Filing Date :NA
(62) Divisional to Application Number :NA
Filing Date :NA

(71)**Name of Applicant :**
1)BAE SYSTEMS PLC
Address of Applicant :6 Carlton Gardens London SW1Y 5AD U.K.
(72)**Name of Inventor :**
1)SMITH Andrew James
2)NAWAZ Mohammed
3)GILES Simon Charles

(57) Abstract :
Methods and apparatus for controlling a bias voltage supplied to an optical modulator the modulator comprising a bias able component the bias able component being configurable to be biased by application of the bias voltage (20) such that the modulator operates at quadrature the method comprising: providing a target for the output power of the modulator the target for the output power of the modulator being an output power corresponding to the modulator operating at quadrature; applying to the bias able component a bias voltage (20) having an initial value of 0V; and thereafter varying the bias voltage (20) until the value of the bias voltage (20) is the value that is closest to the initial value and that biases the bias able component so that the output power of the modulator is within a pre defined range of the target output power.

No. of Pages : 44 No. of Claims : 15

(12) PATENT APPLICATION PUBLICATION
(21) Application No.9143/DELNP/2014 A
(19) INDIA
(22) Date of filing of Application :31/10/2014
(43) Publication Date : 22/05/2015

(54) Title of the invention : IMAGE PROCESSING APPARATUS PROJECTION CONTROL METHOD AND PROGRAM WITH PROJECTION OF A VIRTUAL IMAGE

(51) International classification :G09G3/00
(31) Priority Document No :2012106724
(32) Priority Date :08/05/2012
(33) Name of priority country :Japan
(86) International Application No :PCT/JP2013/001999
Filing Date :25/03/2013
(87) International Publication No :WO 2013/168346
(61) Patent of Addition to Application Number :NA
Filing Date :NA
(62) Divisional to Application Number :NA
Filing Date :NA

(71)**Name of Applicant :**
1)SONY CORPORATION
Address of Applicant :1 7 1 Konan Minato ku Tokyo 1080075 Japan
(72)**Name of Inventor :**
1)KAINO Akihiko
2)OOI Kenichirou

(57) Abstract :
An information processing apparatus and method acquires an image performs an image recognition process on the acquired image to recognize a physical object in that image and then generates a virtual image based on the results of the image recognition process. The virtual image includes a virtual object positioned relative to the physical object that was recognized in the acquired image. A display then displays the virtual image and a projector projects at least part of the virtual image. The apparatus and method also include modes in which the display displays the virtual image but the projector does not project the virtual image where the projector projects the virtual image but the display does not display the virtual image and where the display displays the virtual image and the projector projects the virtual image.

No. of Pages : 54 No. of Claims : 20

(12) PATENT APPLICATION PUBLICATION
(21) Application No.9144/DELNP/2014 A
(19) INDIA
(22) Date of filing of Application :31/10/2014
(43) Publication Date : 22/05/2015

(54) Title of the invention : VARIABLE DROP VOLUME CONTINUOUS LIQUID JET PRINTING

(51) International classification :B41J2/085,B41J2/09
(31) Priority Document No :13/530171
(32) Priority Date :22/06/2012
(33) Name of priority country :U.S.A.
(86) International Application No :PCT/US2013/045120
Filing Date :11/06/2013
(87) International Publication No :WO 2013/191959
(61) Patent of Addition to Application Number :NA
Filing Date :NA
(62) Divisional to Application Number :NA
Filing Date :NA

(71)**Name of Applicant :**
1)EASTMAN KODAK COMPANY
Address of Applicant :343 State Street Rochester NY 14650 2201 U.S.A.
(72)**Name of Inventor :**
1)PANCHAWAGH Hrishikesh V.
2)MARCUS Michael Alan
3)ADIGA Shashishekar P.

(57) Abstract :
A liquid jet includes a fundamental period of jet break off. A print period is defined as N times the fundamental period of jet break off where N is an integer greater than 1. Input image data is provided having M levels per input image pixel including a non print level where M is an integer and 2< M = N+1. A charging device waveform independent of the input image data repeats during print periods and includes print and non print drop voltage states. A drop formation device waveform having a period equal to the print period is selected in response to the input image data to form from the jet print drops having a volume corresponding to an input image pixel level. The devices are synchronized to produce a print drop charge to mass ratio and a non print drop charge to mass ratio on drops breaking off from the jet.

No. of Pages : 42 No. of Claims : 19

(12) PATENT APPLICATION PUBLICATION
(19) INDIA
(22) Date of filing of Application :31/10/2014
(21) Application No.9145/DELNP/2014 A
(43) Publication Date : 22/05/2015

(54) Title of the invention : FINDING BIAS VOLTAGES FOR OPTICAL MODULATORS

(51) International classification :G02F1/01,G02F1/21,G02F1/225
(31) Priority Document No :1207670.9
(32) Priority Date :02/05/2012
(33) Name of priority country :U.K.
(86) International Application No :PCT/GB2013/051114
Filing Date :30/04/2013
(87) International Publication No:WO 2013/164605
(61) Patent of Addition to Application Number :NA
Filing Date :NA
(62) Divisional to Application Number :NA
Filing Date :NA

(71)**Name of Applicant :**
1)BAE SYSTEMS PLC
Address of Applicant :6 Carlton Gardens London SW1Y 5AD U.K.
(72)**Name of Inventor :**
1)SMITH Andrew James
2)NAWAZ Mohammed
3)GILES Simon Charles

(57) Abstract :
Methods and apparatus for finding a bias voltage (20) corresponding to a quadrature point of an optical modulator the modulator comprising a biasable component which is configurable to be biased by application of the bias voltage (20) such that the modulator operates at quadrature the method comprising: providing a target for the output power of the modulator which corresponds to quadrature; applying to the biasable component a bias voltage (20) having an initial value; thereafter finding a value for the bias voltage (20) that biases the biasable component such that the output power of the modulator is within a pre defined range of the target by starting at the initial value alternately increasing and decreasing(or decreasing and increasing)the bias voltage (20) with gradually increasing amplitude; and identifying the found value for the bias voltage (20) as a bias voltage corresponding to a quadrature point of the optical modulator.

No. of Pages : 44 No. of Claims : 16

(12) PATENT APPLICATION PUBLICATION
(21) Application No.9146/DELNP/2014 A
(19) INDIA
(22) Date of filing of Application :31/10/2014
(43) Publication Date : 22/05/2015

(54) Title of the invention : STRUCTURE FOR CONNECTING COOLING APPARATUS COOLING APPARATUS AND METHOD FOR CONNECTING COOLING APPARATUS

(51) International classification :H01L23/40,H05K7/20
(31) Priority Document No :2012112498
(32) Priority Date :16/05/2012
(33) Name of priority country :Japan
(86) International Application No :PCT/JP2013/003001
Filing Date :10/05/2013
(87) International Publication No :WO 2013/172004
(61) Patent of Addition to Application Number :NA
Filing Date :NA
(62) Divisional to Application Number :NA
Filing Date :NA

(71)**Name of Applicant :**
1)NEC CORPORATION
Address of Applicant :7 1Shiba 5 chome Minato ku Tokyo 1088001 Japan
(72)**Name of Inventor :**
1)MATSUNAGA Arihiro
2)YOSHIKAWA Minoru
3)SAKAMOTO Hitoshi
4)SHOUJIGUCHI Akira
5)CHIBA Masaki
6)INABA Kenichi

(57) Abstract :
Since in cooling apparatuses using phase change systems thermal resistance between the cooling apparatuses and heat generating bodies to be cooled increases when trying to obtain high thermal transport performance and sufficient cooling performance is not obtained this structure for connecting a cooling apparatus has: a connecting plate that is provided with an opening; a thin pressing plate that can be elastically deformed; a first fixing unit which fixes the pressing plate and the connecting plate in a state wherein the pressing plate is disposed by covering a heat receiving section that constitutes the cooling apparatus; and a second fixing unit which fixes the connecting plate and a substrate in a state wherein a heat generating body mounted on the substrate and the heat receiving section are disposed in the opening by being in contact with each other.

No. of Pages : 35 No. of Claims : 10

(12) PATENT APPLICATION PUBLICATION
(21) Application No.9147/DELNP/2014 A
(19) INDIA
(22) Date of filing of Application :31/10/2014
(43) Publication Date : 22/05/2015

(54) Title of the invention : METHODS FOR SULFATE REMOVAL IN LIQUID PHASE CATALYTIC HYDROTHERMAL GASIFICATION OF BIOMASS

(51) International classification :C10J3/60,C10L3/00
(31) Priority Document No :13/541003
(32) Priority Date :03/07/2012
(33) Name of priority country :U.S.A.
(86) International Application No :PCT/US2013/034552
Filing Date :29/03/2013
(87) International Publication No :WO 2014/007898
(61) Patent of Addition to Application Number :NA
Filing Date :NA
(62) Divisional to Application Number :NA
Filing Date :NA

(71)**Name of Applicant :**
1)BATTELLE MEMORIAL INSTITUTE
Address of Applicant :902 Battelle Boulevard PO Box 999 Richland WA 99352 U.S.A.
2)GENIFUEL CORPORATION
(72)**Name of Inventor :**
1)ELLIOTT Douglas C.
2)OYLER James R.

(57) Abstract :
Processing of wet biomass feedstock by liquid phase catalytic hydrothermal gasification must address catalyst fouling and poisoning. One solution can involve heating the wet biomass with a heating unit to a pre treatment temperature sufficient for organic constituents in the feedstock to decompose for precipitates of inorganic wastes to form for preheating the wet feedstock in preparation for subsequent removal of soluble sulfate contaminants or combinations thereof. Processing further includes reacting the soluble sulfate contaminants with cations present in the feedstock material to yield a sulfate containing precipitate and separating the inorganic precipitates and/or the sulfate containing precipitates out of the wet feedstock. Having removed much of the inorganic wastes and the sulfate contaminants that can cause poisoning and fouling the wet biomass feedstock can be exposed to the heterogeneous catalyst for gasification.

No. of Pages : 17 No. of Claims : 20

(12) PATENT APPLICATION PUBLICATION
(21) Application No.9148/DELNP/2014 A
(19) INDIA
(22) Date of filing of Application :31/10/2014
(43) Publication Date : 22/05/2015

(54) Title of the invention : CORE LAYER COMPRISING ZIGZAG SHAPED WOOD ELEMENTS AND MULTILAYER COMPOSITE COMPRISING THE CORE LAYER

(51) International classification :E04C2/34,E04C2/12
(31) Priority Document No :12 003 427.7
(32) Priority Date :04/05/2012
(33) Name of priority country :EPO
(86) International Application No :PCT/EP2013/001322
Filing Date :03/05/2013
(87) International Publication No :WO 2013/164100
(61) Patent of Addition to Application Number :NA
Filing Date :NA
(62) Divisional to Application Number :NA
Filing Date :NA

(71)**Name of Applicant :**
1)PADANA AG
Address of Applicant :Schutzengelstrasse 36, CH-6340 Baar China
(72)**Name of Inventor :**
1)MOELLER Achim
2)ECKSTEIN Thomas
3)GRAESSER Johannes

(57) Abstract :
Core layer which is suitable for a multilayer composite comprising at least one cover layer and a core layer wherein the cover layer is arranged such that it at least partially covers the core layer and is fixedly connected thereto wherein the core layer comprises wooden elements comprising zigzagging laminar regions wherein a laminar zig region of an element together with an adjoining laminar zag region of the element form between them a common edge such that the zigzag shaped wood element is formed wherein zigzag shaped elements are arranged in the core layer such that two such edges of two different elements intersect at an angle which is different from zero and wherein the two elements are fixedly connected to each other at the point of intersection. In one embodiment a zigzag shaped wood element can be bonded to a planar wood element such that a zigzag shaped wood element is surrounded in a sandwich like manner by two planar wood elements; or two zigzag shaped wood elements surround a planar wood element in a sandwich like manner.

No. of Pages : 47 No. of Claims : 15

(12) PATENT APPLICATION PUBLICATION
(19) INDIA
(22) Date of filing of Application :28/10/2014
(21) Application No.9001/DELNP/2014 A
(43) Publication Date : 22/05/2015

(54) Title of the invention : ANTI SURGE SPEED CONTROL OF A COMPRESSOR IN A VPSA APPARATUS

(51) International classification :F04D27/02,B01D53/047
(31) Priority Document No :13/484846
(32) Priority Date :31/05/2012
(33) Name of priority country :U.S.A.
(86) International Application No :PCT/US2013/040129
Filing Date :08/05/2013
(87) International Publication No :WO 2013/180919
(61) Patent of Addition to Application Number :NA
Filing Date :NA
(62) Divisional to Application Number :NA
Filing Date :NA

(71)**Name of Applicant :**
1)PRAXAIR TECHNOLOGY INC.
Address of Applicant :39 Old Ridgebury Road Danbury CT 06810 U.S.A.
(72)**Name of Inventor :**
1)ROSINSKI Andrew C.
2)BELANGER Paul W.
3)MANNING Michael S.

(57) Abstract :
The present invention relates to a method and control system to control the speed of a centrifugal compressor operating within a vacuum pressure swing adsorption process to avoid an operation at which surge can occur and directly driven by an electric motor that is in turn controlled by a variable frequency drive. In accordance with present invention an optimal speed for operation of the compressor is determined at which the compressor will operate along a peak efficiency operating line of a compressor map thereof. This speed is adjusted by a feed back speed multiplier when the flow or other parameter referable to flow through the compressor is below a minimum and a feed forward multiplier during evacuation and evacuation with purge steps that multiplies the feed back multiplier to increase speed of the compressor and thereby avoid surge.

No. of Pages : 50 No. of Claims : 20

(12) PATENT APPLICATION PUBLICATION
(19) INDIA
(22) Date of filing of Application :28/10/2014
(21) Application No.9002/DELNP/2014 A
(43) Publication Date : 22/05/2015

(54) Title of the invention : OPEN CHANNEL UV WATER TREATMENT PLANT

(51) International classification :C02F1/32,B01J19/12
(31) Priority Document No :10 2012 008 733.0
(32) Priority Date :04/05/2012
(33) Name of priority country :Germany
(86) International Application No :PCT/EP2013/000655
Filing Date :06/03/2013
(87) International Publication No :WO 2013/164049
(61) Patent of Addition to Application Number :NA
Filing Date :NA
(62) Divisional to Application Number :NA
Filing Date :NA

(71)**Name of Applicant :**
1)XYLEM WATER SOLUTIONS HERFORD GMBH
Address of Applicant :Boschstrasse 4 14 32051 Herford Germany
(72)**Name of Inventor :**
1)MORNINGSTAR Leroy Jack Jr.
2)K„MMERER Sven
3)RAPAKA Madhukar
4)KRGER Friedhelm
5)RAYMOND Daniel

(57) Abstract :
The invention relates to a UV water treatment plant comprising at least one module (1) which includes a number of elongate UV radiation elements (2) in a mount. The radiation elements (2) run parallel to one another. A base (8) is provided to which at least one guide (16,17) is fixedly connected and at least one guide rail (7) is provided that is connected to the mount. The guide rail (7) is movably mounted in the guide.

No. of Pages : 19 No. of Claims : 11

(12) PATENT APPLICATION PUBLICATION
(21) Application No.9005/DELNP/2014 A
(19) INDIA
(22) Date of filing of Application :28/10/2014
(43) Publication Date : 22/05/2015

(54) Title of the invention : CURING AGENT COMPOSITION FOR USE IN PRODUCING MOLD USE THEREOF PREPARATION METHOD THEREFOR AND PROCESS FOR PRODUCING MOLD

(51) International classification :B22C1/22
(31) Priority Document No :2012102948
(32) Priority Date :27/04/2012
(33) Name of priority country :Japan
(86) International Application No :PCT/JP2013/057252
Filing Date :14/03/2013
(87) International Publication No :WO 2013/161426
(61) Patent of Addition to Application Number :NA
Filing Date :NA
(62) Divisional to Application Number :NA
Filing Date :NA

(71)**Name of Applicant :**
1)KAO CORPORATION
Address of Applicant :14 10 Nihonbashi Kayabacho 1 chome Chuo ku Tokyo 1038210 Japan
(72)**Name of Inventor :**
1)JOKETakashi
2)MATSUOToshiki

(57) Abstract :
A curing agent composition for use in producing a mold containing 2,6 dihydroxybenzoic acid. In a sand composition for the production of a mold it is preferable to use simultaneously: a binder composition which is for use in producing a mold and which contains both an acid curable resin and at least one 5 substituted furfural compound selected from the group consisting of 5 hydroxymethylfurfural and 5 acetoxymethylfurfural; and a curing agent composition which is for use in producing a mold and which contains 2,6 dihydroxybenzoic acid. It is preferable that the content of 2,6 dihydroxybenzoic acid in the curing agent composition is 10 to 80wt%.

No. of Pages : 45 No. of Claims : 22

(12) PATENT APPLICATION PUBLICATION
(19) INDIA
(22) Date of filing of Application :28/10/2014
(21) Application No.9006/DELNP/2014 A
(43) Publication Date : 22/05/2015

(54) Title of the invention : DEVICE FOR MEASURING AN ULTRASONIC OR BIOMECHANICAL PARAMETER OF A VISCOELASTIC MEDIUM

(51) International classification	:G01N29/22,G01N29/11,G01N29/032
(31) Priority Document No	:1253904
(32) Priority Date	:27/04/2012
(33) Name of priority country	:France
(86) International Application No	:PCT/EP2013/058800
Filing Date	:26/04/2013
(87) International Publication No	:WO 2013/160468
(61) Patent of Addition to Application Number	:NA
Filing Date	:NA
(62) Divisional to Application Number	:NA
Filing Date	:NA

(71)**Name of Applicant :**
1)ECHOSENS
Address of Applicant :30 Place dItalie F 75013 Paris France
(72)**Name of Inventor :**
1)SANDRIN Laurent
2)MIETTE Vronique
3)SASSO Magali
4)OUDRY Jennifer
5)FRADIN Ludovic

(57) Abstract :
The invention relates to a device (100) for measuring an ultrasonic or biomechanical parameter of a viscoelastic medium (10) the device (100) comprising at least: an ultrasound transducer (12); at least one vibrator (13) having a fixed part (20) and a mobile part (18) said ultrasound transducer (12) being secured to said mobile part (18) of said at least one vibrator (13); at least one adhesive element (14) secured to the vibrator (13) said adhesive element (14) being configured to be fixed adhesively to a surface (11) facing it belonging to the viscoelastic medium (10) and to keep the emission and reception face (16) of the ultrasound transducer (12) facing the surface (11).

No. of Pages : 26 No. of Claims : 13

(12) PATENT APPLICATION PUBLICATION
(19) INDIA
(22) Date of filing of Application :28/10/2014
(21) Application No.9007/DELNP/2014 A
(43) Publication Date : 22/05/2015

(54) Title of the invention : METHOD FOR OPERATING A MULTI GAS BURNER AND MULTI GAS BURNER

(51) International classification :F23D14/22
(31) Priority Document No :NA
(32) Priority Date :NA
(33) Name of priority country :NA
(86) International Application No :PCT/EP2012/002402
Filing Date :05/06/2012
(87) International Publication No :WO 2013/182214
(61) Patent of Addition to Application Number :NA
Filing Date :NA
(62) Divisional to Application Number :NA
Filing Date :NA

(71)**Name of Applicant :**
1)LOESCHE GMBH
Address of Applicant :Hansaallee 243 40549 D¼sseldorf Germany
(72)**Name of Inventor :**
1)WULFERT Holger
2)B„TZ Andr

(57) Abstract :
The invention relates to a method for operating a multi gas burner comprising at least one burner lance with a first second and third nozzle and further comprising a first second and third supply chamber. For a high calorific operation air is fed via the first nozzle 0 depleted gas is fed via the second nozzle and the high calorific fuel gas is fed via the third nozzle into the combustion chamber and all are combusted therein. The invention further relates to a multi gas burner for operation with a low calorific and high calorific fuel gas.

No. of Pages : 22 No. of Claims : 14

(12) PATENT APPLICATION PUBLICATION
(19) INDIA
(22) Date of filing of Application :31/10/2014
(21) Application No.9130/DELNP/2014 A
(43) Publication Date : 22/05/2015

(54) Title of the invention : PLASTIC ENGINE COVER

(51) International classification :B29D99/00,B29C45/00,F02F7/00
(31) Priority Document No :61/644596
(32) Priority Date :09/05/2012
(33) Name of priority country :U.S.A.
(86) International Application No :PCT/EP2013/059068
Filing Date :01/05/2013
(87) International Publication No :WO 2013/167436
(61) Patent of Addition to Application Number :NA
Filing Date :NA
(62) Divisional to Application Number :NA
Filing Date :NA

(71)**Name of Applicant :**
1)DSM IP ASSETS B.V.
Address of Applicant :Het Overloon 1 NL 6411 TE Heerlen Netherlands
(72)**Name of Inventor :**
1)CONKEY James Beam
2)SCHMIEG Peter Clinton

(57) Abstract :
The invention relates to a plastic engine cover as well as to a process for making the plastic engine cover and to an engine comprising the plastic engine cover. The plastic engine cover is made of a glass fibre reinforced thermoplastic polymeric material comprising a polyamide with units derived from terephthalic acid and from diamino butane.

No. of Pages : 14 No. of Claims : 13

(12) PATENT APPLICATION PUBLICATION
(19) INDIA
(22) Date of filing of Application :31/10/2014
(21) Application No.9131/DELNP/2014 A
(43) Publication Date : 22/05/2015

(54) Title of the invention : NEW CATALYTIC SYSTEM

(51) International classification :B01J35/00,B01J23/58,B01J23/62
(31) Priority Document No :12173191.3
(32) Priority Date :22/06/2012
(33) Name of priority country :EPO
(86) International Application No :PCT/EP2013/062956
Filing Date :21/06/2013
(87) International Publication No :WO 2013/190076
(61) Patent of Addition to Application Number :NA
Filing Date :NA
(62) Divisional to Application Number :NA
Filing Date :NA

(71)**Name of Applicant :**
1)DSM IP ASSETS B.V.
Address of Applicant :Patent Department Het Overloon 1 NL 6411 The Heerlen Netherlands
(72)**Name of Inventor :**
1)BONRATH Werner
2)BUSS Axel
3)MEDLOCK Jonathan Alan
4)MUELLER Thomas

(57) Abstract :
The present invention relates to a new catalytic system which is a Lindlar type catalyst wherein the supporting material (CaCO) has an average particle size (d50) of more than 10 Pm as well as to the use of such a catalytic system for the partial hydrogenation of a carbon carbon triple bond (to a carbon carbon double bond).

No. of Pages : 9 No. of Claims : 7

(12) PATENT APPLICATION PUBLICATION
(21) Application No.9132/DELNP/2014 A
(19) INDIA
(22) Date of filing of Application :31/10/2014
(43) Publication Date : 22/05/2015

(54) Title of the invention : UNITARY ABSORBENT STRUCTURES COMPRISING AN ABSORBENT CORE AND/OR AN ACQUISITION AND DISPERSION LAYER FOR ABSORBENT ARTICLES

(51) International classification	:A61F13/15,A61F13/534,A61F13/537
(31) Priority Document No	:NA
(32) Priority Date	: -
(33) Name of priority country	:Belgium
(86) International Application No Filing Date	:PCT/EP2012/056859 :13/04/2012
(87) International Publication No	:WO 2013/152809
(61) Patent of Addition to Application Number Filing Date	:NA :NA
(62) Divisional to Application Number Filing Date	:NA :NA

(71)**Name of Applicant :**
1)LIBELTEX
Address of Applicant :Marialoopsteenweg 51 B 8760 Meulebeke Belgium
(72)**Name of Inventor :**
1)MICHIELS Dany
2)DEGRANDE Tanika

(57) Abstract :
The present invention relates to a unitary absorbent structure and method thereof wherein said unitary absorbent structure comprises an absorbent core (5) and/or an acquisition (2) and dispersion (3) layer said absorbent core (5) and/or an acquisition (2) and dispersion (3) layer comprising at least one non woven fibrous substrate layer (23) having a void volume suitable to be penetrated by super absorbent particles characterized in that said super absorbent particles are dispersed in the substrate layer (23) according to a size distribution gradient along the depth direction or z direction of said absorbent core (5) and/or acquisition (2) and dispersion (3) layers.

No. of Pages : 45 No. of Claims : 26

(12) PATENT APPLICATION PUBLICATION
(19) INDIA
(22) Date of filing of Application :31/10/2014
(21) Application No.9133/DELNP/2014 A
(43) Publication Date : 22/05/2015

(54) Title of the invention : UNITARY ABSORBENT STRUCTURES COMPRISING AN ABSORBENT CORE AND/OR AN ACQUISITION AND DISPERSION LAYER FOR ABSORBENT ARTICLES

(51) International classification :A61F13/15,A61F13/534,A61F13/537
(31) Priority Document No :PCT/EP2012/056859
(32) Priority Date :13/04/2012
(33) Name of priority country :EPO
(86) International Application No :PCT/EP2013/057849
Filing Date :15/04/2013
(87) International Publication No :WO 2013/153235
(61) Patent of Addition to Application Number :NA
Filing Date :NA
(62) Divisional to Application Number :NA
Filing Date :NA

(71)**Name of Applicant :**
1)LIBELTEX
Address of Applicant :Marialoopsteenweg 51 B 8760 Meulebeke Belgium
(72)**Name of Inventor :**
1)MICHIELS Dany
2)DEGRANDE Tanika
3)VANWALLEGHEM Sara

(57) Abstract :
The present invention relates to a unitary absorbent structure and method thereof wherein said unitary absorbent structure comprises an absorbent core (5) and/or an acquisition and dispersion layers (2) (3) and comprising at least one non woven fibrous substrate layer (23) having a void volume suitable to be penetrated by super absorbent particles. The super absorbent particles are dispersed in the substrate layer (23) according to a size distribution gradient by vacuum (8) and vibration along the depth direction or z direction of said absorbent core (5) and/or acquisition (2) and dispersion (3) layers the smaller particles are placed on the body side of the absorbent articles and the larger particles are located on the opposite side of the absorbent articles.

No. of Pages : 59 No. of Claims : 28

(12) PATENT APPLICATION PUBLICATION
(19) INDIA
(22) Date of filing of Application :31/10/2014
(21) Application No.9134/DELNP/2014 A
(43) Publication Date : 22/05/2015

(54) Title of the invention : MICRORNA COMPOUNDS AND METHODS FOR MODULATING MIR 21 ACTIVITY

(51) International classification :C12N15/113,A61K31/712,A61P35/00
(31) Priority Document No :61/741783
(32) Priority Date :25/04/2012
(33) Name of priority country :U.S.A.
(86) International Application No :PCT/US2013/037913
Filing Date :24/04/2013
(87) International Publication No :WO 2013/163258
(61) Patent of Addition to Application Number :NA
Filing Date :NA
(62) Divisional to Application Number :NA
Filing Date :NA

(71)**Name of Applicant :**
1)REGULUS THERAPEUTICS INC.
Address of Applicant :3545 John Hopkins Court Suite 210 San Diego California 92121 U.S.A.
(72)**Name of Inventor :**
1)BHAT Balkrishen
2)MARCUSSON Eric

(57) Abstract :
Described herein are compositions and methods for the inhibition of miR 21 activity. The compositions have certain nucleoside modification patterns that yield potent inhibitors of miR 21 activity. The compositions may be used to inhibit miR 21 and also to treat diseases associated with abnormal expression of miR 21 such as fibrosis and cancer.

No. of Pages : 116 No. of Claims : 65

(12) PATENT APPLICATION PUBLICATION
(21) Application No.9135/DELNP/2014 A
(19) INDIA
(22) Date of filing of Application :31/10/2014
(43) Publication Date : 22/05/2015

(54) Title of the invention : A WINDSCREEN WIPER ARM AND METHOD FOR PRODUCING THE SAME

(51) International classification :B60S1/34
(31) Priority Document No :NA
(32) Priority Date :NA
(33) Name of priority country :NA
(86) International Application No :PCT/EP2012/056356
Filing Date :05/04/2012
(87) International Publication No :WO 2013/149676
(61) Patent of Addition to Application Number :NA
Filing Date :NA
(62) Divisional to Application Number :NA
Filing Date :NA

(71)**Name of Applicant :**
1)FEDERAL MOGUL S.A.
Address of Applicant :Avenue Champion B 6790 Aubange Belgium
(72)**Name of Inventor :**
1)BOLAND Xavier

(57) Abstract :
A windscreen wiper arm (8) particularly for automobiles comprising a mounting head (11) mountable on a drive shaft (12) and an arm member (13) pivotally connected to the mounting head (18) by means of a pivot pin (14) wherein the arm member (13) has a substantially U shaped cross section near said pivot pin (14) comprising two side walls (16,17) wherein a part of the mounting head (11) extends between the side walls (16,17) and beyond said pivot pin (14) wherein said part is provided with opposite abutting surfaces (20,21) for abutting against the side walls (16,17) of the arm member (13) wherein means are provided on said mounting head (11) and said arm member (13) for limiting a pivot angle of the arm member (13) wherein said means comprise at least one guiding groove (22) on one of said abutting surfaces (20,21) of said part of said mounting head (11) as well as at least one outwardly extending finger (19) on said arm member (13) cooperating with said guiding groove (22) wherein said finger (19) is movable in said guiding groove (22) between a first position corresponding with a wiping position of the arm member (13) and a second position corresponding with a mounting position of the arm member (13) and wherein said finger (19) extends outwardly from a base (18) of the U shaped cross section of said arm member (13) in a direction towards said drive shaft (12).

No. of Pages : 24 No. of Claims : 11

(12) PATENT APPLICATION PUBLICATION
(19) INDIA
(22) Date of filing of Application :28/10/2014
(21) Application No.9008/DELNP/2014 A
(43) Publication Date : 22/05/2015

(54) Title of the invention : FRESH PASTA AND METHOD FOR MANUFACTURING FROZEN FRESH PASTA

(51) International classification :A23L1/16
(31) Priority Document No :2012136692
(32) Priority Date :18/06/2012
(33) Name of priority country :Japan
(86) International Application No :PCT/JP2013/066603
Filing Date :17/06/2013
(87) International Publication No :WO 2013/191136
(61) Patent of Addition to Application Number :NA
Filing Date :NA
(62) Divisional to Application Number :NA
Filing Date :NA

(71)**Name of Applicant :**
1)NISSHIN FOODS INC.
Address of Applicant :25 Kandanishikicho 1 chome Chiyoda ku Tokyo 1018441 Japan
(72)**Name of Inventor :**
1)MAEDA Tatsurou
2)IRIE Kentarou
3)NAKANISHI Yumiko

(57) Abstract :
Provided is a fresh pasta that can be frozen and stored for a long period of time and even after thawing retains good appearance and texture comparable to fresh boiled pasta. The fresh pasta has such surface roughness as showing an average Ra of 1.0 10.0 µm and/or an average Ry of 10 50 µm.

No. of Pages : 29 No. of Claims : 4

(12) PATENT APPLICATION PUBLICATION
(21) Application No.9009/DELNP/2014 A
(19) INDIA
(22) Date of filing of Application :28/10/2014
(43) Publication Date : 22/05/2015

(54) Title of the invention : COOLING APPLIANCE

(51) International classification :A47F3/04,F25D23/08
(31) Priority Document No :20 2012 101 699.0
(32) Priority Date :09/05/2012
(33) Name of priority country :Germany
(86) International Application No :PCT/EP2013/057826
Filing Date :15/04/2013
(87) International Publication No :WO 2013/167352
(61) Patent of Addition to Application Number :NA
Filing Date :NA
(62) Divisional to Application Number :NA
Filing Date :NA

(71)**Name of Applicant :**
1)AHT COOLING SYSTEMS GMBH
Address of Applicant :Werksgasse 57 A 8786 Rottenmann Austria
(72)**Name of Inventor :**
1)RESCH Reinhold

(57) Abstract :
The invention relates to a cooling appliance (1) having at least one cooling chamber which is situated in a housing (6) and is accessible from above by means of at least one laterally displaceable sliding cover (2) which has a transparent pane (20) which is in particular provided with a heat reflective inner coating (21) and which at least in the front longitudinal region thereof runs via an outwardly convex curve which is transverse to the longitudinal direction into a longitudinal edge provided with a front border (30). Smooth displacement with reliable sealing are achieved by the fact that the front border (30) has a bearing surface (312) which is horizontal in relation to the vertical direction of gravity.

No. of Pages : 17 No. of Claims : 10

(12) PATENT APPLICATION PUBLICATION
(19) INDIA
(22) Date of filing of Application :22/10/2014
(21) Application No.8880/DELNP/2014 A
(43) Publication Date : 22/05/2015

(54) Title of the invention : METHODS AND APPARATUS FOR SEGMENTING DISTRIBUTING AND RESEGMENTING ADAPTIVE RATE CONTENT STREAMS

(51) International classification :G06F15/16
(31) Priority Document No :13/437111
(32) Priority Date :02/04/2012
(33) Name of priority country :U.S.A.
(86) International Application No :PCT/IB2013/052605
Filing Date :01/04/2013
(87) International Publication No :WO 2013/150437
(61) Patent of Addition to Application Number :NA
Filing Date :NA
(62) Divisional to Application Number :NA
Filing Date :NA

(71)**Name of Applicant :**
1)ERICSSON TELEVISION INC.
Address of Applicant :4500 River Green Parkway Suite 110 Duluth Georgia 30096 U.S.A.
(72)**Name of Inventor :**
1)PHILLIPS Chris
2)FORSMAN Bob
3)DASHER Charles
4)REYNOLDS Jennifer

(57) Abstract :
Methods by a content distribution system and related adaptive streaming segmenter nodes and adaptive streaming re segmenter nodes are disclosed. An adaptive streaming re segmenter node includes at least one network interface that receive a series of segmented files for each of a first plurality of content streams having different coding bit rates of a same source media content. Circuitry combines the series of segmented files to generate a second plurality of content streams having different coding bit rates. The circuitry selects among a plurality of distribution container formats responsive to a streaming protocol used by one of the user equipment nodes and selects among the second plurality of content streams responsive to available resources at the user equipment node. The circuitry also communicates the selected one of the second plurality of content streams toward the user equipment node using the selected distribution container format.

No. of Pages : 35 No. of Claims : 20

(12) PATENT APPLICATION PUBLICATION
(19) INDIA
(22) Date of filing of Application :22/10/2014
(21) Application No.8881/DELNP/2014 A
(43) Publication Date : 22/05/2015

(54) Title of the invention : A TAPPING DEVICE AND METHOD OF USE

(51) International classification :B23G5/06,B23G1/16
(31) Priority Document No :61/616358
(32) Priority Date :27/03/2012
(33) Name of priority country :U.S.A.
(86) International Application No :PCT/CA2013/050156
Filing Date :01/03/2013
(87) International Publication No :WO 2013/142985
(61) Patent of Addition to Application Number :NA
Filing Date :NA
(62) Divisional to Application Number :NA
Filing Date :NA

(71)**Name of Applicant :**
1)SPEEDTAP INDUSTRIES INC.
Address of Applicant :Suite 320 1100 Melville Street Vancouver British Columbia V6E 4A6 Canada
(72)**Name of Inventor :**
1)WHEATLEY Joshua

(57) Abstract :
A tapping device for use with a variety of standard drivers. The tapping device has an elongate body having a first end and a second end. A thread cutting portion is provided toward the first end an end section for fitting to a drive tool is provided at the second end and a shank portion is deposed between the cutting portion and the end section. A flared stop is provided on the shank adjacent to the end section. The end section being a hex head which will operated with standard drive tool such as impact wrenches or traditional sockets and wrenches.

No. of Pages : 18 No. of Claims : 6

(12) PATENT APPLICATION PUBLICATION
(19) INDIA
(22) Date of filing of Application :22/10/2014
(21) Application No.8882/DELNP/2014 A
(43) Publication Date : 22/05/2015

(54) Title of the invention : MEDICAL DEVICE HAVING SURFACE COMPRISING NANOPARTICLES

(51) International classification :A61C8/00,A61L27/30
(31) Priority Document No :61/645746
(32) Priority Date :11/05/2012
(33) Name of priority country :U.S.A.
(86) International Application No :PCT/EP2013/058914
Filing Date :29/04/2013
(87) International Publication No :WO 2013/167417
(61) Patent of Addition to Application Number :NA
Filing Date :NA
(62) Divisional to Application Number :NA
Filing Date :NA

(71)**Name of Applicant :**
1)DENTSPLY IH AB
Address of Applicant :Aminogatan 1 S 431 21 Mlndal Sweden
(72)**Name of Inventor :**
1)ARVIDSSON Anna
2)MATTISSON Ingela
3)AHLBERG Elisabet
4)L–BERG Johanna

(57) Abstract :
A medical device has a surface intended for contact with living tissue wherein the surface comprises nanoparticles comprising a non toxic post transition metal such asgallium and/or bismuth said nanoparticles having an average particle size of 500 nm or less. The nanoparticlesmay provide an antimicrobial effect and thus the risk for infection may bereduced.

No. of Pages : 31 No. of Claims : 29

(12) PATENT APPLICATION PUBLICATION
(19) INDIA
(22) Date of filing of Application :22/10/2014
(21) Application No.8883/DELNP/2014 A
(43) Publication Date : 22/05/2015

(54) Title of the invention : DUAL FUNCTION HEAT INDICATOR AND METHOD OF MANUFACTURE

(51) International classification :G01K11/12
(31) Priority Document No :61/645889
(32) Priority Date :11/05/2012
(33) Name of priority country :U.S.A.
(86) International Application No :PCT/US2013/040824
Filing Date :13/05/2013
(87) International Publication No :WO 2013/170273
(61) Patent of Addition to Application Number :NA
Filing Date :NA
(62) Divisional to Application Number :NA
Filing Date :NA

(71)**Name of Applicant :**
1)TEMPTIME CORPORATION
Address of Applicant :116 American Road Morris Plains NJ 07950 U.S.A.
(72)**Name of Inventor :**
1)PRUSIK Thaddeus
2)SMITH Dawn E.
3)TAYLOR Dene H.
4)HOQUE ARNOLD Raquiba

(57) Abstract :
A dual function heat indicator for monitoring two or more modes of heat exposure is described. A manufacturing process for the dual function heat indicator is also described. Dual function heat indicators as described may be useful for monitoring the exposure of host products with which the dual function heat indicators may be associated to cumulative ambient heat exposure and to a peak ambient heat exposure and for other purposes.

No. of Pages : 80 No. of Claims : 63

(12) PATENT APPLICATION PUBLICATION
(19) INDIA
(22) Date of filing of Application :29/10/2014
(21) Application No.9047/DELNP/2014 A
(43) Publication Date : 22/05/2015

(54) Title of the invention : METHOD AND DEVICE FOR SECURE DISPOSAL OF AN ARTICLE

(51) International classification :A45C13/00,B65D53/00,B65D83/10
(31) Priority Document No :61/621729
(32) Priority Date :09/04/2012
(33) Name of priority country :U.S.A.
(86) International Application No :PCT/US2013/035818
Filing Date :09/04/2013
(87) International Publication No :WO 2013/155095
(61) Patent of Addition to Application Number :NA
Filing Date :NA
(62) Divisional to Application Number :NA
Filing Date :NA

(71)**Name of Applicant :**
1)AKOOBA INC.
Address of Applicant :870 Childs Point Road Annapolis MD 21401 U.S.A.
(72)**Name of Inventor :**
1)YOUNG Erik Brian
2)YOUNG Matthew Brian

(57) Abstract :
A method and structure for a secure storage container having a front and back shell and a locking mechanism built in such that the secure storage container cannot be opened after being closed and a disposal method utilizing the secure storage container.

No. of Pages : 50 No. of Claims : 20

(12) PATENT APPLICATION PUBLICATION
(19) INDIA
(22) Date of filing of Application :31/10/2014
(21) Application No.9138/DELNP/2014 A
(43) Publication Date : 22/05/2015

(54) Title of the invention : SYSTEM AND METHOD FOR PROXY MEDIA CACHING

(51) International classification :H04L29/08,G06F17/30,H04N21/231
(31) Priority Document No :61/620315
(32) Priority Date :04/04/2012
(33) Name of priority country :U.S.A.
(86) International Application No :PCT/US2013/035098
Filing Date :03/04/2013
(87) International Publication No :WO 2013/152091
(61) Patent of Addition to Application Number :NA
Filing Date :NA
(62) Divisional to Application Number :NA
Filing Date :NA

(71)**Name of Applicant :**
1)UNWIRED PLANET INC.
Address of Applicant :170 South Virginia Street Suite 201 Reno NV 89501 U.S.A.
(72)**Name of Inventor :**
1)HARRISON Declan
2)MCQUILLAN Eoin

(57) Abstract :
Systems and methods for proxy media caching are disclosed. A method in accordance with an embodiment of the invention includes receiving at a proxy a response to a request for media content generating a fingerprint from a sample of media content contained in the response searching a cache using the fingerprint and if a cache hit occurs causing cached media content which is associated with the cache hit to be sent to the client device.

No. of Pages : 42 No. of Claims : 30

(12) PATENT APPLICATION PUBLICATION
(19) INDIA
(22) Date of filing of Application :31/10/2014
(21) Application No.9139/DELNP/2014 A
(43) Publication Date : 22/05/2015

(54) Title of the invention : CONTROLLING BIAS VOLTAGES FOR OPTICAL MODULATORS

(51) International classification :G02F1/01,G02F1/225,H04B10/50
(31) Priority Document No :1207689.9
(32) Priority Date :02/05/2012
(33) Name of priority country :U.K.
(86) International Application No :PCT/GB2013/051113
Filing Date :30/04/2013
(87) International Publication No :WO 2013/164604
(61) Patent of Addition to Application Number :NA
Filing Date :NA
(62) Divisional to Application Number :NA
Filing Date :NA

(71)**Name of Applicant :**
1)BAE SYSTEMS PLC
Address of Applicant :6 Carlton Gardens London SW1Y 5AD U.K.
(72)**Name of Inventor :**
1)SMITH Andrew James
2)NAWAZ Mohammed

(57) Abstract :
Methods and apparatus for controlling a bias voltage (20) supplied to an optical modulator that comprises a biasable component configurable to be biased by application of the bias voltage (20) the method comprising: providing a target for the modulator output power; applying to the biasable component a bias voltage (20) that biases the biasable component so that the output power is within a pre defined range of the target; monitoring the output power and if the output power of the modulator is determined to be outside the pre defined range varying the value of the bias voltage (20) to bring the output power back within the pre defined range; and monitoring the optical input to the modulator and if it has been disabled maintaining the bias voltage (20) at its current level for a pre determined length of time that is dependent upon how long the modulator has been operating at quadrature.

No. of Pages : 47 No. of Claims : 18

(12) PATENT APPLICATION PUBLICATION
(21) Application No.9140/DELNP/2014 A
(19) INDIA
(22) Date of filing of Application :31/10/2014
(43) Publication Date : 22/05/2015

(54) Title of the invention : SIGNAL SENDING METHOD BASE STATION TERMINAL AND SYSTEM

(51) International classification :H04L27/20
(31) Priority Document No :201210125463.1
(32) Priority Date :25/04/2012
(33) Name of priority country :China
(86) International Application No :PCT/CN2012/088004
Filing Date :31/12/2012
(87) International Publication No :WO 2013/159555
(61) Patent of Addition to Application Number :NA
Filing Date :NA
(62) Divisional to Application Number :NA
Filing Date :NA

(71)**Name of Applicant :**
1)ZTE CORPORATION
Address of Applicant :ZTE Plaza Keji Road South Hi Tech Industrial Park Nanshan District Shenzhen Guangdong 518057 China
(72)**Name of Inventor :**
1)HOU Xiaohui

(57) Abstract :
Provided are a signal sending method base station terminal and system. The method comprises: adding into a signal to be sent to a terminal at least one of the following: AQPSK modulated angle information a pairing relationship and baseband signal position information the AQPSK modulated angle information being used for indicating the relative power relationship between terminals which multiplex the same time slot the pairing relationship being used for indicating the corresponding training sequence of each terminal which multiplexes the same time slot and the baseband signal position information being used for indicating that the baseband signal of each terminal which multiplexes the same time slot is located in a real part position or an imaginary part position; and sending the signal to the terminal. The present invention is applied to solve the problem that a terminal cannot learn more information to determine the correlation between itself and another mobile terminal which multiplexes the same time slot as it so that the terminal can learn more information about another mobile terminal which multiplexes the same time slot as it thereby increasing the system performance.

No. of Pages : 24 No. of Claims : 11

(12) PATENT APPLICATION PUBLICATION
(21) Application No.8741/DELNP/2014 A
(19) INDIA
(22) Date of filing of Application :17/10/2014
(43) Publication Date : 22/05/2015

(54) Title of the invention : HOOD FOR METAL OXIDE VAPOR COATING GLASS CONTAINERS

(51) International classification :C23C16/00
(31) Priority Document No :61/639164
(32) Priority Date :27/04/2012
(33) Name of priority country :U.S.A.
(86) International Application No :PCT/US2013/037520
Filing Date :22/04/2013
(87) International Publication No :WO 2013/163055
(61) Patent of Addition to Application Number :NA
Filing Date :NA
(62) Divisional to Application Number :NA
Filing Date :NA

(71)**Name of Applicant :**
1)ARKEMA INC.
Address of Applicant :900 First Avenue King of Prussia Pennsylvania 19406 U.S.A.
(72)**Name of Inventor :**
1)FAHEY Kaitlyn

(57) Abstract :
An apparatus for coating glass articles with a chemical compound includes a coating hood section defining an interior chamber having an inlet and an outlet the outlet being positioned adjacent the glass articles. A blower is positioned in the interior chamber to carry air from the inlet towards the outlet. An injector is configured to deliver the chemical compound into the interior chamber the injector being positioned in the interior chamber at a location that is downstream of the blower. The injector extends into the interior chamber by a pre determined distance that is selected to prevent premature vaporization of the chemical compound.

No. of Pages : 22 No. of Claims : 18

(12) PATENT APPLICATION PUBLICATION
(19) INDIA
(22) Date of filing of Application :17/10/2014
(21) Application No.8742/DELNP/2014 A
(43) Publication Date : 22/05/2015

(54) Title of the invention : POLYMERS POLYMER BLENDS AND ARTICLES MADE THEREFROM

(51) International classification :C08L23/08,C08J5/18
(31) Priority Document No :61/621202
(32) Priority Date :06/04/2012
(33) Name of priority country :U.S.A.
(86) International Application No :PCT/US2013/030491
Filing Date :12/03/2013
(87) International Publication No :WO 2013/151687
(61) Patent of Addition to Application Number :NA
Filing Date :NA
(62) Divisional to Application Number :NA
Filing Date :NA

(71)**Name of Applicant :**
1)EXXONMOBIL CHEMICAL PATENTS INC.
Address of Applicant :5200 Bayway Drive Baytown TX 77520 2101 U.S.A.
(72)**Name of Inventor :**
1)MALAKOFF Alan M.
2)HALLE Richard W.
3)SILVA Adriana S.
4)BEST Steven A.

(57) Abstract :
Polymer compositions including an ethylene based polymer having a melt index of from about 0.1 g/10 min to about 5.0 g/10 min; a melt index ratio of from about 15 to about 30; a weight average molecular weight (Mw) of from about 20 000 to about 200 000; a molecular weight distribution (Mw/Mn) of from about 2.0 to about 4.5; and a density of from 0.900 to 0.920 g/cm. Films having a thickness of 1 mil show a difference between the maximum seal strength and the minimum seal strength over the ranges of temperatures between 95.0°C and 140.0°C of < l.OOx lO grams/cm.

No. of Pages : 41 No. of Claims : 26

(12) PATENT APPLICATION PUBLICATION
(21) Application No.8746/DELNP/2014 A
(19) INDIA
(22) Date of filing of Application :16/10/2014
(43) Publication Date : 22/05/2015

(54) Title of the invention : ADAPTER STABILIZATION FOR BUCKET LIP

(51) International classification :E02F9/28
(31) Priority Document No :61/613719
(32) Priority Date :21/03/2012
(33) Name of priority country :U.S.A.
(86) International Application No :PCT/US2013/030334
Filing Date :12/03/2013
(87) International Publication No :WO 2013/142130
(61) Patent of Addition to Application Number :NA
Filing Date :NA
(62) Divisional to Application Number :NA
Filing Date :NA

(71)**Name of Applicant :**
1)HENSLEY INDUSTRIES INC.
Address of Applicant :2108 Joe Field Road Dallas Texas 75229 U.S.A.
(72)**Name of Inventor :**
1)CAMPOMANES Patrick

(57) Abstract :
A ground engaging support structure such as an adapter is mounted on the front edge of an excavating bucket lip in a manner inhibiting side to side movement of the installed adapter and shielding the front bucket lip edge from operational wear at the adapter installation location using opposing tapered block members secured to the front lip edge for movement toward a forwardly projecting stabilizing portion of the lip edge. The adapter is telescoped onto the front lip edge over its stabilizing projection correspondingly tapered portions of the adapter engage the block members and move them toward one another and toward the stabilizing projection. Rear leg portions of the adapter are then suitably secured to the bucket lip. The repositioned block members interposed between adapter the front bucket lip edge then inhibit side to side shifting of the installed adapter while also shielding the lip edge from operational abrasion wear.

No. of Pages : 14 No. of Claims : 20

(12) PATENT APPLICATION PUBLICATION
(21) Application No.8747/DELNP/2014 A
(19) INDIA
(22) Date of filing of Application :17/10/2014
(43) Publication Date : 22/05/2015

(54) Title of the invention : LIQUID CRYSTAL DISPLAY DEVICE

(51) International classification :G02F1/13,G02B27/22,G02F1/133
(31) Priority Document No :2012094959
(32) Priority Date :18/04/2012
(33) Name of priority country :Japan
(86) International Application No :PCT/JP2013/057884
Filing Date :19/03/2013
(87) International Publication No :WO 2013/157341
(61) Patent of Addition to Application Number :NA
Filing Date :NA
(62) Divisional to Application Number :NA
Filing Date :NA

(71)**Name of Applicant :**
1)TOPPAN PRINTING CO. LTD.
Address of Applicant :5 1 Taito 1 chome Taito ku Tokyo 1100016 Japan
(72)**Name of Inventor :**
1)SHIMA Yasuhiro
2)NAKADA Hisashi
3)FUKUYOSHI Kenzo

(57) Abstract :
A liquid crystal display device (1) according to an embodiment is equipped with an array substrate (6) a color filter substrate (5) a liquid crystal layer (7) a backlight (4) and a control unit (12). The array substrate (6) is provided with a plurality of pixel electrodes corresponding to a plurality of pixels arranged in a matrix pattern. The color filter substrate (5) faces the array substrate (6) and is provided with a color filter corresponding to the plurality of pixels. The liquid crystal layer (7) is positioned between the array substrate (6) and the color filter substrate (5). The backlight (4) is positioned on the rear surface side of the array substrate (6). The control unit (12) controls the timing of application of liquid crystal drive voltage to the pixel electrodes and the timing of light emission from the backlight (4). The plurality of pixels have a shape that is long in the horizontal direction and have the same color arranged in the horizontal direction and different colors arranged in the vertical direction. Neighboring pixels in the horizontal direction among the plurality of pixels have line symmetry along the center line of the neighboring pixels. The liquid crystal molecules of the neighboring pixels fall in the direction of line symmetry along the center line when the liquid crystal drive voltage is imparted to the pixel electrode corresponding to the neighboring pixels.

No. of Pages : 80 No. of Claims : 15

(12) PATENT APPLICATION PUBLICATION
(19) INDIA
(22) Date of filing of Application :18/10/2014
(21) Application No.8776/DELNP/2014 A
(43) Publication Date : 22/05/2015

(54) Title of the invention : ROLLING ELEMENT GUIDE CAGE AND METHOD FOR PRODUCING SAME

(51) International classification :F16C33/42,F16C33/50,F16C33/54
(31) Priority Document No :10 2012 206 450.8
(32) Priority Date :19/04/2012
(33) Name of priority country :Germany
(86) International Application No :PCT/EP2013/052722
Filing Date :12/02/2013
(87) International Publication No :WO 2013/156173
(61) Patent of Addition to Application Number :NA
Filing Date :NA
(62) Divisional to Application Number :NA
Filing Date :NA

(71)**Name of Applicant :**
1)SCHAEFFLER TECHNOLOGIES GMBH & CO. KG
Address of Applicant :Industriestrasse 1 3 91074 Herzogenaurach Germany
(72)**Name of Inventor :**
1)REIMCHEN Alexander

(57) Abstract :
The invention relates to a rolling element guide cage having a ring element which is made from a sheet material and has an axial profiling produced using forming techniques and forms a plurality of successive rolling element guide structures in the circumferential direction wherein the ring element is composed of at least two flat material ring segments joined to one another successively in the circumferential direction said segments being joined together in a manufacturing step which precedes the formation of the axial profiling.

No. of Pages : 28 No. of Claims : 10

(12) PATENT APPLICATION PUBLICATION
(19) INDIA
(22) Date of filing of Application :18/10/2014
(21) Application No.8777/DELNP/2014 A
(43) Publication Date : 22/05/2015

(54) Title of the invention : METHOD FOR PREPARATION OF IMIDODISULFURYL COMPOUNDS

(51) International classification :C07C303/36
(31) Priority Document No :13176189.2
(32) Priority Date :11/07/2013
(33) Name of priority country :EPO
(86) International Application No :PCT/EP2014/064785
Filing Date :10/07/2014
(87) International Publication No :WO 2015/004220
(61) Patent of Addition to Application Number :NA
Filing Date :NA
(62) Divisional to Application Number :NA
Filing Date :NA

(71)**Name of Applicant :**
1)LONZA LTD
Address of Applicant :Lonzastrasse CH 3930 Visp Switzerland
(72)**Name of Inventor :**
1)SCHNIDER Christian
2)ROBERGE Dominique
3)GOTTSPONER Michael
4)KLEIN Andreas
5)GRUETZNER Thomas
6)BITTEL Michael
7)TILLE Stefan
8)HORMES Anna Christina
9)LEIGGENER Janine

(57) Abstract :
The invention relates to a method for the preparation of imidodisulfuryl compounds in a continuous reaction at elevated temperatures.

No. of Pages : 26 No. of Claims : 13

(12) PATENT APPLICATION PUBLICATION
(21) Application No.9115/DELNP/2014 A
(19) INDIA
(22) Date of filing of Application :30/10/2014
(43) Publication Date : 22/05/2015

(54) Title of the invention : VENT SYSTEM FOR A GRAVITY FEED SPRAY DEVICE

(51) International classification :B05B7/24
(31) Priority Document No :61/641181
(32) Priority Date :01/05/2012
(33) Name of priority country :U.S.A.
(86) International Application No :PCT/US2013/030039
Filing Date :08/03/2013
(87) International Publication No :WO 2013/165556
(61) Patent of Addition to Application Number :NA
Filing Date :NA
(62) Divisional to Application Number :NA
Filing Date :NA

(71)**Name of Applicant :**
1)FINISHING BRANDS HOLDINGS INC.
Address of Applicant :88 11th Avenue NE Minneapolis MN 55413 U.S.A.
(72)**Name of Inventor :**
1)MARSALEK Daniel F.
2)BURNS Marvin D.

(57) Abstract :
A system (10) is provided for venting a container used to supply a liquid to a spray coating device. The system may include a container cover (144) having a liquid conduit (146) configured to extend into a liquid container at least one wall surrounding a buffer chamber (150) configured to separate the interior volume of the container from the exterior environment a first vent (156) conduit that extends into the buffer chamber a second vent (158) conduit that extends from the buffer chamber to the liquid container and at least one check valve (168) coupled to either conduit.

No. of Pages : 40 No. of Claims : 20

(12) PATENT APPLICATION PUBLICATION
(19) INDIA
(22) Date of filing of Application :30/10/2014
(21) Application No.9117/DELNP/2014 A
(43) Publication Date : 22/05/2015

(54) Title of the invention : DRIFT PLATE AND JET DEVICE

(51) International classification :B23K1/08,B23K3/06,H05K3/34
(31) Priority Document No :2012103249
(32) Priority Date :27/04/2012
(33) Name of priority country :Japan
(86) International Application No :PCT/JP2013/057832
Filing Date :19/03/2013
(87) International Publication No :WO 2013/161453
(61) Patent of Addition to Application Number :NA
Filing Date :NA
(62) Divisional to Application Number :NA
Filing Date :NA

(71)**Name of Applicant :**
1)SENJU METAL INDUSTRY CO. LTD.
Address of Applicant :23 Senju Hashido cho Adachi ku Tokyo 1208555 Japan
(72)**Name of Inventor :**
1)NISHIDA Shingo

(57) Abstract :
The present invention comprises: a drift plate on which the structure of a drift member is devised to change the direction of the flow of molten solder; a semi cylindrical plate (11) that has a predetermined inner shape and a predetermined height as illustrated in Fig. 1 and is erected on a predetermined substrate to change the direction of the flow of the molten solder; and a semi cylindrical plate (12) that has a predetermined inner shape and a predetermined height and is disposed on the substrate (13) where the semi cylindrical plate (11) is erected to change the direction of the flow of the molten solder. The semi cylindrical plate (11) and the semi cylindrical plate (12) are opposed to each other so that an inner surface of the semi cylindrical plate (11) faces an end portion of the semi cylindrical plate (12) and an inner surface of the semi cylindrical plate (12) faces an end portion of the semi cylindrical plate (11). According to the structure the molten solder can be jetted to a target position and the width direction distribution of the jetted height of the molten solder can be uniform.

No. of Pages : 44 No. of Claims : 6

(12) PATENT APPLICATION PUBLICATION
(19) INDIA
(22) Date of filing of Application :30/10/2014
(21) Application No.9118/DELNP/2014 A
(43) Publication Date : 22/05/2015

(54) Title of the invention : BIOPHOTONIC COMPOSITIONS KITS AND METHODS

(51) International classification :C09K11/02,A61K41/00,A61K8/49
(31) Priority Document No :61/636480
(32) Priority Date :20/04/2012
(33) Name of priority country :U.S.A.
(86) International Application No :PCT/CA2013/000395
Filing Date :19/04/2013
(87) International Publication No :WO 2013/155620
(61) Patent of Addition to Application Number :NA
Filing Date :NA
(62) Divisional to Application Number :NA
Filing Date :NA

(71)**Name of Applicant :**
1)KLOX TECHNOLOGIES INC.
Address of Applicant :275 Boulevard Armand Frappier Laval Quebec H7V 4A7 Canada
(72)**Name of Inventor :**
1)LOUPIS Nikolaos
2)PIERGALLINI Remigio
3)RASTOGI Shipra

(57) Abstract :
The present disclosure provides biophotonic topical compositions kits and their uses. In particular the biophotonic topical compositions of the present disclosure are substantially resistant to leaching such that very low amounts of chromophore(s) present in the biophotonic composition leach out of the composition. The biophotonic compositions and their uses are useful for promoting wound healing and skin rejuvenation as well as treating acne and various skin disorders.

No. of Pages : 105 No. of Claims : 84

(12) PATENT APPLICATION PUBLICATION
(19) INDIA
(22) Date of filing of Application :31/10/2014
(21) Application No.9119/DELNP/2014 A
(43) Publication Date : 22/05/2015

(54) Title of the invention : INSTALLATION FOR PRODUCING CONTAINERS WITH CONTAINER BASE COOLING

(51) International classification :B67C3/02
(31) Priority Document No :10 2012 104 267.5
(32) Priority Date :16/05/2012
(33) Name of priority country :Germany
(86) International Application No :PCT/EP2013/060135
Filing Date :16/05/2013
(87) International Publication No :WO 2013/171299
(61) Patent of Addition to Application Number :NA
Filing Date :NA
(62) Divisional to Application Number :NA
Filing Date :NA

(71)**Name of Applicant :**
1)KRONES AG
Address of Applicant :Bhmerwaldstr. 5 93073 Neutraubling Germany
(72)**Name of Inventor :**
1)AUBURGER Michael
2)SAUSPREISCHKIES Wolfgang

(57) Abstract :
The invention relates to a device (1) for producing plastic containers (10) for liquids comprising a conveyor device (2) which conveys the plastic containers (10) along a predetermined conveyor path (P) a forming device (4) which forms plastic preforms into the plastic containers (10) a first filling device (12) which is arranged after the forming device (4) along the conveyor path and which fills said plastic containers (10) with a liquid and a cooling device (8) that is arranged between the forming device (4) and the first filling device (12) and that cools at least one region of the wall of the plastic containers (10) by the application of a flow able medium. According to the invention said cooling device (8) comprises a second filling device (8) which fills the container with a liquid for cooling a base region (10a) of the plastic container (10).

No. of Pages : 31 No. of Claims : 11

(12) PATENT APPLICATION PUBLICATION
(19) INDIA
(22) Date of filing of Application :31/10/2014
(21) Application No.9153/DELNP/2014 A
(43) Publication Date : 22/05/2015

(54) Title of the invention : MAGNETIZING INRUSH CURRENT SUPPRESSION DEVICE

(51) International classification :H01H33/59,H01H9/54,H01H33/44
(31) Priority Document No :2012106618
(32) Priority Date :08/05/2012
(33) Name of priority country :Japan
(86) International Application No :PCT/JP2013/061292
Filing Date :16/04/2013
(87) International Publication No :WO 2013/168519
(61) Patent of Addition to Application Number :NA
Filing Date :NA
(62) Divisional to Application Number :NA
Filing Date :NA

(71)**Name of Applicant :**
1)KABUSHIKI KAISHA TOSHIBA
Address of Applicant :1 1 Shibaura 1 chome Minato ku Tokyo 1058001 Japan
(72)**Name of Inventor :**
1)KOSHIZUKA Tadashi
2)MARUYAMA Shiro
3)SAITO Minoru
4)MAEHARA Hiroyuki
5)SUZUKI Koji

(57) Abstract :
A magnetizing inrush current suppression device (6) controls a circuit breaker (2) that opens and closes a connection between a three phase transformer (3) and a power source bus (1) in a state where a load (7) is connected to the three phase transformer (3) such that a magnetizing inrush current is suppressed. The three phase alternating current voltage on the power source bus (1) side of the circuit breaker (2) is measured and the current for the three phase alternating current flowing in the load (7) from the power source bus (1) is measured. An isolated first phase that is the first isolated of the three phases is detected and a zero point phase (0c) that is passed through when the isolated first phase for the three phase alternating current voltage transitions from the same polarity as the polarity of the current just before isolation of the isolated first phase to the reverse polarity is detected. The circuit breaker (2) is turned on at a phase within 60° from the detected phase (0c).

No. of Pages : 43 No. of Claims : 8

(12) PATENT APPLICATION PUBLICATION
(19) INDIA
(22) Date of filing of Application :31/10/2014
(21) Application No.9154/DELNP/2014 A
(43) Publication Date : 22/05/2015

(54) Title of the invention : MICROWAVE ASSISTED CITRUS WASTE BIOREFINERY

(51) International classification :C08B37/00,B01J19/12
(31) Priority Document No :1206034.9
(32) Priority Date :04/04/2012
(33) Name of priority country :U.K.
(86) International Application No :PCT/GB2013/000154
Filing Date :04/04/2013
(87) International Publication No :WO 2013/150262
(61) Patent of Addition to Application Number :NA
Filing Date :NA
(62) Divisional to Application Number :NA
Filing Date :NA

(71)**Name of Applicant :**
1)UNIVERSITY OF YORK
Address of Applicant :Heslington York YO10 5DD U.K.
(72)**Name of Inventor :**
1)CLARK James Hanley
2)PFALTZGRAFF Lucie Anne
3)BUDARIN Vitaliy Lvovich
4)DE BRUYN Mario

(57) Abstract :
There is described a method of isolating one or more of pectin d limonene a flavour compound a flavonoid a soluble monosaccharide a decomposition product of a monosaccharide and cellulose from citrus material wherein said method comprises the microwave assisted hydrothermal low temperature treatment of citrus material.

No. of Pages : 61 No. of Claims : 53

(12) PATENT APPLICATION PUBLICATION
(19) INDIA
(22) Date of filing of Application :31/10/2014
(21) Application No.9155/DELNP/2014 A
(43) Publication Date : 22/05/2015

(54) Title of the invention : INFORMATION INPUT METHOD DEVICE TERMINAL AND STORAGE MEDIUM

(51) International classification :G06F21/00
(31) Priority Document No :201210099607.0
(32) Priority Date :06/04/2012
(33) Name of priority country :China
(86) International Application No :PCT/CN2013/072997
Filing Date :21/03/2013
(87) International Publication No :WO 2013/149553
(61) Patent of Addition to Application Number :NA
Filing Date :NA
(62) Divisional to Application Number :NA
Filing Date :NA

(71)**Name of Applicant :**
1)TENCENT TECHNOLOGY (SHENZHEN) COMPANY LIMITED
Address of Applicant :Room 403 East Block 2 SEG Park Zhenxing Road Futian District Shenzhen Guangdong 518044 China
(72)**Name of Inventor :**
1)WANG Qing
2)LUO Zhanghu
3)HUANG Zefeng
4)GUO Haoran
5)XIAO Quanhao
6)YUAN Yixia
7)SONG Jiashun
8)LI Pengtao
9)DAI Yunfeng
10)ZHAN Xunchang
11)LIN Chunyou

(57) Abstract :
Disclosed are an information input method device a terminal and a storage medium which belong to the technical field of communications. The information input method comprises: monitoring the state of an input box the state comprising an active state or a sleep state; when the input box is monitored to be in the active state invoking a virtual keyboard; and inputting information in the input box according to preset keys on the virtual keyboard. The device comprises a monitoring module an invoking module and an input module. The terminal comprises a processor a memory and a program. The storage medium is used for storing the program. The present invention increases the security of user information.

No. of Pages : 24 No. of Claims : 23

(12) PATENT APPLICATION PUBLICATION
(19) INDIA
(22) Date of filing of Application :31/10/2014
(21) Application No.9156/DELNP/2014 A
(43) Publication Date : 22/05/2015

(54) Title of the invention : CONTAINERS HAVING IMPROVED LOAD BEARING CAPACITY

(51) International classification :B65D1/26
(31) Priority Document No :61/643975
(32) Priority Date :08/05/2012
(33) Name of priority country :U.S.A.
(86) International Application No :PCT/IB2013/053419
Filing Date :30/04/2013
(87) International Publication No :WO 2013/168050
(61) Patent of Addition to Application Number :NA
Filing Date :NA
(62) Divisional to Application Number :NA
Filing Date :NA

(71)**Name of Applicant :**
1)NESTEC S.A.
Address of Applicant :Avenue Nestle 55 CH 1800 Vevey Switzerland
(72)**Name of Inventor :**
1)WOLF John Joseph
2)HARACOURT Tomas Heinrich
3)BOLTZ William Arthur
4)SCRIMGER Michael Todd

(57) Abstract :
Containers having improved load bearing features are provided. In a general embodiment the present disclosure provides a container having at least one beveled portion at a location where a side wall meets a bottom wall. In another embodiment a container includes a bottom wall and at least four side walls the side walls forming corners where adjacent side walls meet. The corners have a beveled shape at a location where the corners meet the bottom wall. The containers of the present disclosure have an axial load compression capacity that is substantially the same as a similar container having a greater wall thickness without the at least one beveled portion.

No. of Pages : 23 No. of Claims : 21

(12) PATENT APPLICATION PUBLICATION
(19) INDIA
(22) Date of filing of Application :31/10/2014
(21) Application No.9157/DELNP/2014 A
(43) Publication Date : 22/05/2015

(54) Title of the invention : AN INGREDIENT CAPSULE FOR BEVERAGE PREPARATION

(51) International classification :B65D85/816,B65D85/804
(31) Priority Document No :12166965.9
(32) Priority Date :07/05/2012
(33) Name of priority country :EPO
(86) International Application No :PCT/EP2013/059064
Filing Date :01/05/2013
(87) International Publication No :WO 2013/167435
(61) Patent of Addition to Application Number :NA
Filing Date :NA
(62) Divisional to Application Number :NA
Filing Date :NA

(71)**Name of Applicant :**
1)NESTEC S.A.
Address of Applicant :Av. Nestl 55 CH 1800 Vevey Switzerland
(72)**Name of Inventor :**
1)DOGAN Nihan

(57) Abstract :
Capsule (9) for use in a beverage preparation machine (1) said capsule comprising side (10) bottom (12) and top (11) walls defining a closed chamber said capsule further comprising a beverage dispensing wall able to open for releasing a beverage prepared from said ingredient and said fluid said capsule comprising a separating wall (14) within the chamber that separates in a leak tight manner an ingredient containing compartment (15) and a fluid injection compartment (16) said separating wall (14) comprising a one way valve (17) able to let fluid under pressure flow only from the injection compartment towards the ingredient containing compartment said valve being actuated in its open configuration by the injection element (22) of the machine wherein the one way valve is either : (i) a spring mounted ball valve or alternatively (ii) a flexible resilient O ring valve mounted in a circular channel of the separating wall.

No. of Pages : 17 No. of Claims : 7

(12) PATENT APPLICATION PUBLICATION
(19) INDIA
(22) Date of filing of Application :28/10/2014
(21) Application No.8996/DELNP/2014 A
(43) Publication Date : 22/05/2015

(54) Title of the invention : SOLUBLE SOLID HAIR COLORING ARTICLE

(51) International classification :A61Q5/06,A61K8/34,A61K8/41
(31) Priority Document No :NA
(32) Priority Date :NA
(33) Name of priority country :NA
(86) International Application No :PCT/US2012/039161
Filing Date :23/05/2012
(87) International Publication No:WO 2013/176666
(61) Patent of Addition to Application Number :NA
Filing Date :NA
(62) Divisional to Application Number :NA
Filing Date :NA

(71)**Name of Applicant :**
1)THE PROCTER & GAMBLE COMPANY
Address of Applicant :One Procter & Gamble Plaza Cincinnati Ohio 45202 U.S.A.
(72)**Name of Inventor :**
1)FELTS Timothy James
2)ZHANG Guiru
3)SUNKEL Jorge Max
4)MURPHY Bryan Patrick

(57) Abstract :
A soluble solid hair coloring article having zwitterionic direct dye and one or more soluble porous solids containing nonionic surfactant cationic surfactant or a mixture thereof such that the one or more soluble porous solids have a density of from about 0.03 g/cm3 to about 0.15 g/cm3; and methods of applying the soluble solid hair coloring article to hair.

No. of Pages : 58 No. of Claims : 10

(12) PATENT APPLICATION PUBLICATION
(21) Application No.9114/DELNP/2014 A
(19) INDIA
(22) Date of filing of Application :30/10/2014
(43) Publication Date : 22/05/2015

(54) Title of the invention : METHOD FOR OPERATING AN ULTRASONIC CONVERTER

(51) International classification :G01S15/32,G01S7/524
(31) Priority Document No :10 2012 213 712.2
(32) Priority Date :02/08/2012
(33) Name of priority country :Germany
(86) International Application No :PCT/EP2013/065378
Filing Date :22/07/2013
(87) International Publication No :WO 2014/019876
(61) Patent of Addition to Application Number :NA
Filing Date :NA
(62) Divisional to Application Number :NA
Filing Date :NA

(71)**Name of Applicant :**
1)ROBERT BOSCH GMBH
Address of Applicant :Postfach 30 02 20 70442 Stuttgart Germany
(72)**Name of Inventor :**
1)KIRCHNER Tobias

(57) Abstract :
The invention relates to a method for operating an ultrasonic converter (20) in which ultrasonic signals are emitted by the ultrasonic converter (20) and reflected ultrasonic echoes are received again by the ultrasonic converter (20) wherein the ultrasonic converter (20) is coupled in parallel to an oscillatory circuit (18) comprising the following steps: (a) exciting the oscillatory circuit (18) with a signal generator (12) which is connected in series to the oscillatory circuit (18) wherein the ultrasonic converter (20) is excited by means of the oscillatory circuit (18) and emits an ultrasonic signal (b) damping the oscillation of the ultrasonic converter (20) (c) receiving the ultrasonic echo wherein in order to damp the oscillation of the ultrasonic converter (20) according to step (b) the excitation of the oscillatory circuit (18) is ended with the signal generator (12) the signal generator is disconnected from the oscillatory circuit (20) for a defined time period t and after the expiry of the time period tit is coupled to the oscillatory circuit (18) again wherein the phase of the oscillation in the oscillatory circuit (20) is shifted with respect to the oscillation of the ultrasonic converter (20) and the phase shifted oscillation of the oscillatory circuit (18) damps the oscillation of the ultrasonic converter (20). Furthermore the invention relates to a device for operating an ultrasonic converter (20).

No. of Pages : 19 No. of Claims : 9

(12) PATENT APPLICATION PUBLICATION
(19) INDIA
(22) Date of filing of Application :29/10/2014
(21) Application No.9067/DELNP/2014 A
(43) Publication Date : 22/05/2015

(54) Title of the invention : PLANT REGULATORY ELEMENTS AND USES THEREOF

(51) International classification :C12N5/14
(31) Priority Document No :61/635945
(32) Priority Date :20/04/2012
(33) Name of priority country :U.S.A.
(86) International Application No :PCT/US2013/036011
Filing Date :10/04/2013
(87) International Publication No :WO 2013/158442
(61) Patent of Addition to Application Number :NA
Filing Date :NA
(62) Divisional to Application Number :NA
Filing Date :NA

(71)**Name of Applicant :**
1)MONSANTO TECHNOLOGY LLC
Address of Applicant :800 North Lindbergh Blvd. St. Louis MO 63167 U.S.A.
(72)**Name of Inventor :**
1)AHRENS Jeffrey
2)CHERIAN Shoba
3)LOIDA Paul J.
4)LUTFIYYA Linda L.
5)WU Wei
6)XIE Jiali

(57) Abstract :
The present invention provides DNA molecules and constructs and their nucleotide sequences useful for modulating gene expression in plants. Transgenic plants plant cells plant parts and seeds comprising the DNA molecules operably linked to heterologous transcribable polynucleotides are also provided as are methods of their use.

No. of Pages : 53 No. of Claims : 20

(12) PATENT APPLICATION PUBLICATION
(19) INDIA
(22) Date of filing of Application :29/10/2014
(21) Application No.9068/DELNP/2014 A
(43) Publication Date : 22/05/2015

(54) Title of the invention : SALT FORM OF A HUMAN HI STONE METHYLTRANSF ERASE EZH2 INHIBITOR

(51) International classification :C07D407/12,A61K31/444,A61P35/00
(31) Priority Document No :61/624215
(32) Priority Date :13/04/2012
(33) Name of priority country :U.S.A.
(86) International Application No :PCT/US2013/036193
Filing Date :11/04/2013
(87) International Publication No :WO 2013/155317
(61) Patent of Addition to Application Number :NA
Filing Date :NA
(62) Divisional to Application Number :NA
Filing Date :NA

(71)**Name of Applicant :**
1)EPIZYME INC.
Address of Applicant :400 Technology Square 4th Floor Cambridge MA 02139 U.S.A.
2)EISAI R&D MANAGEMENT CO.LTD.
(72)**Name of Inventor :**
1)KUNTZ Kevin Wayne
2)HUANG Kuan chun
3)CHOI Hyeong Wook
4)SANDERS Kristen
5)MATHIEU Steven
6)CHANDA Arani
7)FANG Frank

(57) Abstract :
Provided herein is N-((4,6-dimethyl-2-oxo-l,2-dmydropyridin-3-yl)methyl)-5-(ethyl(tetrahydro-2H-pyran-4- yl)amino)-4-methyl-4-(morpholinomethyl)-[l , -biphenyl]-3-carboxamide hydrobromide. Also provided herein is a particular polymorph form of this compound.

No. of Pages : 93 No. of Claims : 34

(12) PATENT APPLICATION PUBLICATION
(19) INDIA
(22) Date of filing of Application :30/10/2014
(21) Application No.9069/DELNP/2014 A
(43) Publication Date : 22/05/2015

(54) Title of the invention : DISPOSABLE DIAPER AND METHOD FOR PRODUCING DISPOSABLE DIAPER

(51) International classification :A61F13/15,A61F13/49,A61F13/494
(31) Priority Document No :2012103412
(32) Priority Date :27/04/2012
(33) Name of priority country :Japan
(86) International Application No :PCT/JP2013/062244
Filing Date :25/04/2013
(87) International Publication No :WO 2013/161955
(61) Patent of Addition to Application Number :NA
Filing Date :NA
(62) Divisional to Application Number :NA
Filing Date :NA

(71)**Name of Applicant :**
1)UNICHARM CORPORATION
Address of Applicant :182 Shimobun Kinsei cho Shikokuchuo shi Ehime 7990111 Japan
(72)**Name of Inventor :**
1)SAKAGUCHI Satoru
2)ISHIKAWA Shinichi

(57) Abstract :
This disposable diaper (10) is provided with a leg extension/contraction section that can extend/contract along the product lengthwise direction and is disposed along a leg encircling opening section provided at the outside in the product widthwise direction with respect to an absorbent body. The leg extension/contraction section is provided with: a band shaped first leg extension/contraction material (76); and a thread shaped second leg extension/contraction material (77) that is disposed within a first extension/contraction material disposing region at which the first leg extension/contraction material has been disposed and that has a shorter length in the product widthwise direction compared to the first leg extension/contraction material. A non extending/ contracting side flap (70) is provided to the skin contacting surface side with respect to the first leg extension/contraction material and/or the second leg extension/contraction material. The elongation rate in the product lengthwise direction of the second leg extension/contraction material is higher than the elongation rate in the product lengthwise direction of the first leg extension/contraction material.

No. of Pages : 35 No. of Claims : 11

(12) PATENT APPLICATION PUBLICATION
(19) INDIA
(22) Date of filing of Application :30/10/2014
(21) Application No.9070/DELNP/2014 A
(43) Publication Date : 22/05/2015

(54) Title of the invention : DISPOSABLE DIAPER AND METHOD FOR PRODUCING DISPOSABLE DIAPER

(51) International classification :A61F13/49,A61F13/15,A61F13/56
(31) Priority Document No :2012103376
(32) Priority Date :27/04/2012
(33) Name of priority country :Japan
(86) International Application No :PCT/JP2013/062250
Filing Date :25/04/2013
(87) International Publication No :WO 2013/161957
(61) Patent of Addition to Application Number :NA
Filing Date :NA
(62) Divisional to Application Number :NA
Filing Date :NA

(71)**Name of Applicant :**
1)UNICHARM CORPORATION
Address of Applicant :182 Shimobun Kinsei cho Shikokuchuo shi Ehime 7990111 Japan
(72)**Name of Inventor :**
1)SAKAGUCHI Satoru
2)YAMANAKA Yasuhiro

(57) Abstract :
This disposable diaper (10) is provided with: a skin surface side sheet (50) disposed at a wearer skin contacting surface side; a non skin surface side sheet (60) disposed at a non skin contacting surface side; an absorbent body (40); a torso encircling holding section that holds the disposable diaper to the body of the wearer; and a leg extending/contracting section (75). The leg extending/contracting section is disposed at the inside in the product widthwise direction or the inside in the product lengthwise direction with respect to the diaper edges configuring the outer periphery of the disposable diaper. A portion of the torso encircling holding section is disposed at a first region (R1) to the outside in the product lengthwise direction from the leg extending/contracting section and/or a second region (R2) to the outside in the product widthwise direction from the leg extending/contracting section and a joining region (65) at which the skin surface side sheet and the non skin surface side sheet are joined is provided along the diaper edges.

No. of Pages : 27 No. of Claims : 10

(12) PATENT APPLICATION PUBLICATION
(21) Application No.9071/DELNP/2014 A
(19) INDIA
(22) Date of filing of Application :30/10/2014
(43) Publication Date : 22/05/2015

(54) Title of the invention : DISPOSABLE DIAPER

(51) International classification :A61F13/15,A61F13/49
(31) Priority Document No :2012103461
(32) Priority Date :27/04/2012
(33) Name of priority country :Japan
(86) International Application No :PCT/JP2013/062242
Filing Date :25/04/2013
(87) International Publication No :WO 2013/161954
(61) Patent of Addition to Application Number :NA
Filing Date :NA
(62) Divisional to Application Number :NA
Filing Date :NA

(71)**Name of Applicant :**
1)UNICHARM CORPORATION
Address of Applicant :182 Shimobun Kinsei cho Shikokuchuo shi Ehime 7990111 Japan
(72)**Name of Inventor :**
1)SAKAGUCHI Satoru

(57) Abstract :
This disposable diaper (10) is provided with a leg extension/contraction section (75) that can extend/contract along the product lengthwise direction and is disposed along a leg encircling opening section provided to the outside in the product widthwise direction with respect to an absorbent body. A supplemental extension/contraction section (76) that can contract along the product lengthwise direction is provided at the gap between the leg extension/contraction section and the absorbent body in the product widthwise direction; the supplemental extension/contraction section is disposed biased to the back torso encircling region side of the center in the product lengthwise direction; and the elongation rate in the product lengthwise direction of the supplemental extension/contraction section is greater than the elongation rate in the product lengthwise direction of the leg extension/contraction section.

No. of Pages : 31 No. of Claims : 7

(12) PATENT APPLICATION PUBLICATION
(19) INDIA
(22) Date of filing of Application :30/10/2014
(21) Application No.9075/DELNP/2014 A
(43) Publication Date : 22/05/2015

(54) Title of the invention : SUPER ABSORBENT POLYMER AND METHOD FOR MANUFACTURING SAME

(51) International classification :C08J3/075,C08J3/24,C08F20/00
(31) Priority Document No :1020120043435
(32) Priority Date :25/04/2012
(33) Name of priority country :Republic of Korea
(86) International Application No :PCT/KR2013/003465
Filing Date :23/04/2013
(87) International Publication No:WO 2013/162255
(61) Patent of Addition to Application Number :NA
Filing Date :NA
(62) Divisional to Application Number :NA
Filing Date :NA

(71)**Name of Applicant :**
1)LG CHEM LTD.
Address of Applicant :128 Yeoui daero Yeongdeungpo gu Seoul 150 721 Republic of Korea
(72)**Name of Inventor :**
1)WON Tae Young
2)HAN Chang Sun
3)KIM Gi Cheul
4)LEE Yong Hun
5)LEE Sang Gi
6)KIM Kyu Pal
7)PARK Sung Soo
8)LEEM Gyu

(57) Abstract :
The present invention relates to a super absorbent polymer and to a method for manufacturing same. More particularly a super absorbent polymer and a method for manufacturing same are provided wherein the super absorbent polymer uses a surface treating solution that includes water and diol or a glycol based surface cross linking agent during the surface treatment of the super absorbent polymer satisfies all the combined physical properties required of a super absorbent polymer and is especially effective in both initial absorbency and absorbing rate when pressed.

No. of Pages : 41 No. of Claims : 17

(12) PATENT APPLICATION PUBLICATION
(19) INDIA
(22) Date of filing of Application :30/10/2014
(21) Application No.9076/DELNP/2014 A
(43) Publication Date : 22/05/2015

(54) Title of the invention : PRINTED ENCAPSULATION

(51) International classification :B29C67/00,B29C70/68
(31) Priority Document No :61/622146
(32) Priority Date :10/04/2012
(33) Name of priority country :U.S.A.
(86) International Application No :PCT/US2013/030717
Filing Date :13/03/2013
(87) International Publication No :WO 2013/154723
(61) Patent of Addition to Application Number :NA
Filing Date :NA
(62) Divisional to Application Number :NA
Filing Date :NA

(71)**Name of Applicant :**
1)A. RAYMOND ET CIE
Address of Applicant :115 Cours Berriat F 38000 Grenoble France
(72)**Name of Inventor :**
1)REZNAR Jason F.
2)HEMINGWAY Todd L.

(57) Abstract :
A printed encapsulation method and part are provided. Another aspect uses a three dimensional printing machine to emit material from an ink jet printing head to build up material attached to an insert.

No. of Pages : 23 No. of Claims : 31

(12) PATENT APPLICATION PUBLICATION
(21) Application No.9077/DELNP/2014 A
(19) INDIA
(22) Date of filing of Application :30/10/2014
(43) Publication Date : 22/05/2015

(54) Title of the invention : DEVICE AND METHOD FOR GUIDING A BLOWN FILM

(51) International classification :B29C53/10,B29C47/00
(31) Priority Document No :10 2012 103 095.2
(32) Priority Date :11/04/2012
(33) Name of priority country :Germany
(86) International Application No :PCT/EP2013/055875
Filing Date :21/03/2013
(87) International Publication No :WO 2013/152933
(61) Patent of Addition to Application Number :NA
Filing Date :NA
(62) Divisional to Application Number :NA
Filing Date :NA

(71)**Name of Applicant :**
1)WINDM–LLER & H–LSCHER KG
Address of Applicant :M¼nsterstr. 50 49525 Lengerich Germany
(72)**Name of Inventor :**
1)OBERDALHOFF Tim

(57) Abstract :
The invention relates to a guiding device (10) for guiding a blown film (100) between a film blowing die (300) and a take off roller device (200) comprising at least two lateral guides (20) located opposite one another for laterally guiding the blown film (100) wherein at least one lateral guide (20) is provided with a first guide segment (22a) and a second guide segment (22b) which are connected to one another in an articulated manner. At least one lever kinematics (30) is provided which is in drive connection with a drive device (50) and which is interconnected with the two guide segments (22a, 22b) such that when the drive device (50) is actuated by way of the lever kinematics (30) the angles of attack (a,a) of the two guide segments (22a,22b) to the conveyance direction (F) of the blown film (100) can be varied.

No. of Pages : 18 No. of Claims : 14

(12) PATENT APPLICATION PUBLICATION
(19) INDIA
(22) Date of filing of Application :30/10/2014
(21) Application No.9078/DELNP/2014 A
(43) Publication Date : 22/05/2015

(54) Title of the invention : TEAR PREVENTER ON A SIDE AIR CUSHION OUTLET SEAM OF A VEHICLE SEAT COVERING AND VEHICLE SEAT COVERING WITH A TEAR PREVENTER

(51) International classification :B60R21/207,B60N2/58
(31) Priority Document No :NA
(32) Priority Date :NA
(33) Name of priority country :NA
(86) International Application No :PCT/EP2012/057386
Filing Date :23/04/2012
(87) International Publication No :WO 2013/159805
(61) Patent of Addition to Application Number :NA
Filing Date :NA
(62) Divisional to Application Number :NA
Filing Date :NA

(71)**Name of Applicant :**
1)JOHNSON CONTROLS GMBH
Address of Applicant :Industriestrae 20 30 51399 Burscheid Germany
(72)**Name of Inventor :**
1)WIEDERHOEFT Wolfgang
2)ERBER Hans
3)RAUBAL Christian

(57) Abstract :
The invention relates to a tear preventer (2,3) on a side air cushion outlet seam (4) of a vehicle seat covering (5) for a vehicle seat (1). According to the invention in each case a fabric hose (16) is arranged on an inner side of the vehicle seat covering(s) on the two seam ends of the side air cushion outlet seam (4) and is connected in a materially joined and/or frictionally locking fashion to the vehicle seat cover (5). Furthermore the invention relates to a vehicle seat cover (5) having a tear preventer (2,3) on a side air cushion outlet seam (4).

No. of Pages : 17 No. of Claims : 8

(12) PATENT APPLICATION PUBLICATION
(19) INDIA
(22) Date of filing of Application :30/10/2014
(21) Application No.9079/DELNP/2014 A
(43) Publication Date : 22/05/2015

(54) Title of the invention : ENHANCED METRICS FOR DEMODULATION AND SOFT INFORMATION GENERATION IN THE PRESENCE OF A NON CONSTANT ENVELOPE MODULATED INTERFERER

(51) International classification :H04L25/06,H04L27/26,H04L27/38
(31) Priority Document No :13/434955
(32) Priority Date :30/03/2012
(33) Name of priority country :U.S.A.
(86) International Application No :PCT/IB2013/052471
Filing Date :27/03/2013
(87) International Publication No :WO 2013/144886
(61) Patent of Addition to Application Number :NA
Filing Date :NA
(62) Divisional to Application Number :NA
Filing Date :NA

(71)**Name of Applicant :**
1)TELEFONAKTIEBOLAGET L M ERICSSON (PUBL)
Address of Applicant :16483 S 16483 Stockholm Sweden
(72)**Name of Inventor :**
1)HUI Dennis
2)KHAYRALLAH Ali

(57) Abstract :
Embodiments of a receiver are disclosed that utilize enhanced metrics for demodulation and soft bit information generation in the presence of a non constant envelope modulated interfering signal. In general the receiver includes a downc onverter and a demodulator. The downconverter receives a radio frequency signal comprising a desired signal noise and a non constant envelope modulated interfering signal and do wneon verts the radio frequency signal to provide a downconveried signal The demodulator demodulates the do wncon verted signal based on a demodulation meiric that models the non constant envelope modulated interfering signal as a stationary non Gaussian random process with a probability distribution derived from a modulation constellation of a. modulation used for the non constant envelope modulated interfering signal. In one embodiment the demodulator outputs demodulated symbols in another embodiment the demodulator outputs soft bit information.

No. of Pages : 47 No. of Claims : 20

(12) PATENT APPLICATION PUBLICATION
(19) INDIA
(22) Date of filing of Application :22/10/2014
(21) Application No.8856/DELNP/2014 A
(43) Publication Date : 22/05/2015

(54) Title of the invention : OFFSET PRINTING INK OR OFFSET PRINTING VARNISH

(51) International classification :C09D11/02,C09D11/08,C09D11/10
(31) Priority Document No :10 2012 103 825.2
(32) Priority Date :02/05/2012
(33) Name of priority country :Germany
(86) International Application No :PCT/EP2013/059008
Filing Date :30/04/2013
(87) International Publication No :WO 2013/164347
(61) Patent of Addition to Application Number :NA
Filing Date :NA
(62) Divisional to Application Number :NA
Filing Date :NA

(71)**Name of Applicant :**
1)EPPLE DRUCKFARBEN AG
Address of Applicant :Gutenbergstrasse 5 86356 Neusss Augsburg Germany
(72)**Name of Inventor :**
1)EPPLE Carl
2)EISELE KOHLER Artur

(57) Abstract :
The invention relates to an offset printing ink or an offset printing varnish that is suitable for direct contact with foods comprising at least one binder and optionally at least one colorant wherein all components of the offset printing ink or the offset printing varnish are either foods in the sense of Regulation (EC) No 178/2002 of the European Parliament and of the Council or food additives in the sense of Regulation (EC) No 1333/2008 of the European Parliament and of the Council.

No. of Pages : 20 No. of Claims : 28

(12) PATENT APPLICATION PUBLICATION
(19) INDIA
(22) Date of filing of Application :22/10/2014
(21) Application No.8857/DELNP/2014 A
(43) Publication Date : 22/05/2015

(54) Title of the invention : PATTERNED OBSCURATION LINES FOR ELECTROCHROMIC DEVICES

(51) International classification :C03C17/32,C03C17/34,G02F1/157
(31) Priority Document No :61/619719
(32) Priority Date :03/04/2012
(33) Name of priority country :U.S.A.
(86) International Application No :PCT/US2013/034559
Filing Date :29/03/2013
(87) International Publication No :WO 2013/151882
(61) Patent of Addition to Application Number :NA
Filing Date :NA
(62) Divisional to Application Number :NA
Filing Date :NA

(71)**Name of Applicant :**
1)SAGE ELECTROCHROMICS INC.
Address of Applicant :One Sage Way Faribault MN 55021 U.S.A.
(72)**Name of Inventor :**
1)PODBELSKI Louis J.
2)BUESING Ole
3)SAVARY Jean Philippe

(57) Abstract :
An electrochromic device (5) is provided. The device (5) may be inserted within a frame (1). The device may include a substrate (10) an electrochromic coating (15) and a patterned layer (99). The electrochromic coating (15) may overlie a portion of the substrate (10) within a visible region of the substrate (10). The electrochromic coating (15) may have an outer edge (25) that is spaced from an outer boundary (22) of the visible region of the substrate (10). The outer edge (25) of the electrochromic coating (15) and the outer boundary (22) of the visible region may define a working region. The patterned layer (99) may be deposited within the working region. The patterned layer (99) may include a plurality of spaced apart shapes (211,213).

No. of Pages : 26 No. of Claims : 24

(12) PATENT APPLICATION PUBLICATION
(19) INDIA
(22) Date of filing of Application :22/10/2014
(21) Application No.8858/DELNP/2014 A
(43) Publication Date : 22/05/2015

(54) Title of the invention : METHOD OF AND APPARATUS FOR THERMAL LASER SCRIBE CUTTING FOR ELECTROCHROMIC DEVICE PRODUCTION; CORRESPONDING CUT GLASS PANEL

(51) International classification	:B23K26/40,B28D5/00,C03B33/09
(31) Priority Document No	:61/620713
(32) Priority Date	:05/04/2012
(33) Name of priority country	:U.S.A.
(86) International Application No	:PCT/US2013/029871
Filing Date	:08/03/2013
(87) International Publication No	:WO 2013/151660
(61) Patent of Addition to Application Number	:NA
Filing Date	:NA
(62) Divisional to Application Number	:NA
Filing Date	:NA

(71)**Name of Applicant :**
1)SAGE ELECTROCHROMICS INC.
Address of Applicant :One Sage Way Faribault MN 55021 U.S.A.
(72)**Name of Inventor :**
1)GIRON Jean christophe
2)KALWEIT Harvey
3)MCCOY Michael A.
4)YEH Li Ya
5)DOUCHE Jean pierre

(57) Abstract :
The disclosure is directed to a cutting process involving: (a) creating a starter crack (41,48) using a scribe wheel (b) application of laser or electrothermal heating and (c) subsequent cooling from a gas or an aerosol jet as the laser beam and cooling jet move along the desired cutting line. The cutting process can be implemented for cutting a glass panel (30) or other substrate into a plurality of smaller panels (31,35). The starter crack (41,48) may be created on any of the smaller panels (31,35) within about 10 mm to about 20 mm from the corner of the smaller panel.

No. of Pages : 25 No. of Claims : 26

(12) PATENT APPLICATION PUBLICATION
(19) INDIA
(22) Date of filing of Application :31/10/2014
(21) Application No.9136/DELNP/2014 A
(43) Publication Date : 22/05/2015

(54) Title of the invention : RADIATION CURABLE INKJET INKS AND INDUSTRIAL INKJET PRINTING METHODS

(51) International classification :B41M5/00,B41M7/00,C09D11/00
(31) Priority Document No :12170916.6
(32) Priority Date :06/06/2012
(33) Name of priority country :EPO
(86) International Application No :PCT/EP2013/061377
Filing Date :03/06/2013
(87) International Publication No :WO 2013/182517
(61) Patent of Addition to Application Number :NA
Filing Date :NA
(62) Divisional to Application Number :NA
Filing Date :NA

(71)**Name of Applicant :**
1)AGFA GRAPHICS NV
Address of Applicant :IP Department 3622 Septestraat 27 B 2640 Mortsel Belgium
(72)**Name of Inventor :**
1)DE MONDT Roel
2)THIJS Ivo

(57) Abstract :
An inkjet printing method according to the present invention includes in order the steps of: a) jetting a radiation curable inkjet ink on the outside surface of a packaging including a substance for human or animal consumption or administration; b) curing the radiation curable inkjet ink on the outer surface of the packaging; and c) treating the radiation curable inkjet ink and the packaging including the substance with a heat treatment to kill micro organisms present on the inside surface of a packaging; wherein the radiation curable inkjet ink includes at least 5 wt% of a (meth)acrylated silicone surfactant based on the total weight of the radiation curable inkjet ink.

No. of Pages : 51 No. of Claims : 15

(12) PATENT APPLICATION PUBLICATION
(19) INDIA
(22) Date of filing of Application :30/10/2014
(21) Application No.9101/DELNP/2014 A
(43) Publication Date : 22/05/2015

(54) Title of the invention : METHOD FOR PRODUCING MOLD FOR TRANSFERRING FINE PATTERN METHOD FOR PRODUCING SUBSTRATE HAVING UNEVEN STRUCTURE USING SAME AND METHOD FOR PRODUCING ORGANIC EL ELEMENT HAVING SAID SUBSTRATE HAVING UNEVEN STRUCTURE

(51) International classification	:B29C59/02,B29C33/38,H01L21/027
(31) Priority Document No	:2012101065
(32) Priority Date	:26/04/2012
(33) Name of priority country	:Japan
(86) International Application No	:PCT/JP2013/057851
Filing Date	:19/03/2013
(87) International Publication No	:WO 2013/161454
(61) Patent of Addition to Application Number	:NA
Filing Date	:NA
(62) Divisional to Application Number	:NA
Filing Date	:NA

(71)**Name of Applicant :**
1)JX NIPPON OIL & ENERGY CORPORATION
Address of Applicant :6 3 Otemachi 2 chome Chiyoda ku Tokyo 1008162 Japan
(72)**Name of Inventor :**
1)SEKI Takashi
2)MASUYAMA Satoshi
3)FUKUDA Maki
4)NISHIMURA Suzushi

(57) Abstract :
Provided by a simple process and with high throughput is a mold for transferring a fine pattern suitable for producing a substrate having an uneven structure such as a diffraction grating. A method for producing a mold for transferring a fine pattern comprising a step for coating the surface of a base material with a solution comprising a block copolymer and a polyalkylene oxide a solvent phase separation step for phase separating the block copolymer in the presence of an organic solvent vapor to obtain a block copolymer film which has an uneven structure on the surface and the interior of which is a horizontal cylinder structure a step for layering a metal layer by electroforming and a step for peeling off the base material having the uneven structure from the metal layer.

No. of Pages : 93 No. of Claims : 27

(12) PATENT APPLICATION PUBLICATION
(19) INDIA
(22) Date of filing of Application :16/10/2014
(21) Application No.8689/DELNP/2014 A
(43) Publication Date : 22/05/2015

(54) Title of the invention : METHOD AND APPARATUS FOR MOBILE POSITIONING

(51) International classification	:H04W4/02,H04W64/00,G01S5/00
(31) Priority Document No	:PCT/CN2012/074803
(32) Priority Date	:27/04/2012
(33) Name of priority country	:China
(86) International Application No	:PCT/EP2012/060986
Filing Date	:11/06/2012
(87) International Publication No	:WO 2013/159835
(61) Patent of Addition to Application Number	:NA
Filing Date	:NA
(62) Divisional to Application Number	:NA
Filing Date	:NA

(71)**Name of Applicant :**
1)TELEFONAKTIEBOLAGET L M ERICSSON (PUBL)
Address of Applicant :Torshamnsgatan 21 23 SE 164 83 Stockholm Sweden
(72)**Name of Inventor :**
1)ZHANG Yang
2)SHU Edison
3)YU Aron

(57) Abstract :
A solution in particular in multi vendor situations allowing access to a mobile location center for example having capability for specific positioning methods such as fingerprinting with minor impact on existing standards. The method and system for determining a position of a UE comprises the steps of a first network node receiving a request for positioning information about the UE; the first network node requesting a first positioning procedure at a first location node; the first location node determining using the first positioning procedure that involvement by a second location node is needed; the first location node initiating a trigger for positioning information about the UE to be sent to the second location node; the second location node upon receiving the trigger for positioning information and determining the presence of an environment measurement parameter determining the position information of the UE by performing a second positioning procedure based on the environment measurement parameter and sending a position calculation response with the positioning information.

No. of Pages : 37 No. of Claims : 27

(12) PATENT APPLICATION PUBLICATION
(19) INDIA
(22) Date of filing of Application :31/10/2014
(21) Application No.9121/DELNP/2014 A
(43) Publication Date : 22/05/2015

(54) Title of the invention : A PROCESS FOR THE PRODUCTION OF METHACRYLIC ACID AND ITS DERIVATIVES AND POLYMERS PRODUCED THEREFROM

(51) International classification :C07C51/38,C07C57/04,C08F20/06
(31) Priority Document No :1207391.2
(32) Priority Date :27/04/2012
(33) Name of priority country :U.K.
(86) International Application No :PCT/GB2013/051081
Filing Date :26/04/2013
(87) International Publication No :WO 2013/160703
(61) Patent of Addition to Application Number :NA
Filing Date :NA
(62) Divisional to Application Number :NA
Filing Date :NA

(71)**Name of Applicant :**
1)LUCITE INTERNATIONAL UK LIMITED
Address of Applicant :Cumberland House 15 17 Cumberland Place Southampton Hampshire SO15 2BG U.K.
(72)**Name of Inventor :**
1)EASTHAM Graham Ronald
2)JOHNSON David William
3)WAUGH Mark

(57) Abstract :
A process for the production of methacrylic acid by the base catalysed decarboxylation of at least one dicarboxylic acid selected from itaconic citraconic or mesaconic acid or mixtures thereof is described. The decarboxylation is carried out at a temperature in the range from 100 to 199°C. A method of preparing polymers or copolymers of methacrylic acid or methacrylic acid esters is also described.

No. of Pages : 38 No. of Claims : 24

(12) PATENT APPLICATION PUBLICATION
(19) INDIA
(22) Date of filing of Application :31/10/2014
(21) Application No.9123/DELNP/2014 A
(43) Publication Date : 22/05/2015

(54) Title of the invention : SCAFFOLD

(51) International classification :A61L27/26,A61L27/38,A61L27/58
(31) Priority Document No :1207723.6
(32) Priority Date :02/05/2012
(33) Name of priority country :U.K.
(86) International Application No :PCT/GB2013/051126
Filing Date :01/05/2013
(87) International Publication No :WO 2013/164615
(61) Patent of Addition to Application Number :NA
Filing Date :NA
(62) Divisional to Application Number :NA
Filing Date :NA

(71)**Name of Applicant :**
1)THE UNIVERSITY OF SHEFFIELD
Address of Applicant :Firth Court Western Bank Sheffield South Yorkshire S10 2TN U.K.
(72)**Name of Inventor :**
1)CLAEYSSENS Frederik
2)ORTEGA Ilida
3)MACNEIL Sheila
4)RYAN Anthony

(57) Abstract :
The invention provides a method for producing an electrospun scaffold comprising electrospinning a polymer or co polymer onto a template comprising a conductive collector having a three dimensional pattern thereon wherein said electrospun polymer or co polymer preferentially deposits onto said three dimensional pattern.

No. of Pages : 59 No. of Claims : 38

(12) PATENT APPLICATION PUBLICATION
(21) Application No.9124/DELNP/2014 A
(19) INDIA
(22) Date of filing of Application :31/10/2014
(43) Publication Date : 22/05/2015

(54) Title of the invention : GATEWAY COMMUNICATION SYSTEM METHOD OF CONTROLLING GATEWAY AND COMPUTER READABLE MEDIUM THEREFOR

(51) International classification	:H04W76/02,H04W80/04,H04W84/10
(31) Priority Document No	:2012117401
(32) Priority Date	:23/05/2012
(33) Name of priority country	:Japan
(86) International Application No	:PCT/JP2013/003263
Filing Date	:22/05/2013
(87) International Publication No	:WO 2013/175788
(61) Patent of Addition to Application Number	:NA
Filing Date	:NA
(62) Divisional to Application Number	:NA
Filing Date	:NA

(71)**Name of Applicant :**
1)NEC CORPORATION
Address of Applicant :7 1 Shiba 5 chome Minato ku Tokyo 1088001 Japan
(72)**Name of Inventor :**
1)KUWANO Hiroaki

(57) Abstract :
A gateway (60) is connected to a plurality of base stations (20) and a core network (70). The gateway (60) includes a receiver that receives from the core network (70) a message establishing a communication path to any one of the plurality of base stations (20) wherein the message includes a received Access Point Name (APN). The gateway (60) also includes a controller that determines in response to the APN included in the massage a destination of the message using information indicating a destination base station corresponding to the received APN.

No. of Pages : 51 No. of Claims : 10

(12) PATENT APPLICATION PUBLICATION
(19) INDIA
(22) Date of filing of Application :31/10/2014
(21) Application No.9125/DELNP/2014 A
(43) Publication Date : 22/05/2015

(54) Title of the invention : MOULDED ARTICLE WITH LOW WARPAGE

(51) International classification :C08L23/10,C08L23/12,C08K3/40
(31) Priority Document No :NA
(32) Priority Date :NA
(33) Name of priority country :NA
(86) International Application No :PCT/CN2012/075857
Filing Date :22/05/2012
(87) International Publication No :WO 2013/173970
(61) Patent of Addition to Application Number :NA
Filing Date :NA
(62) Divisional to Application Number :NA
Filing Date :NA

(71)**Name of Applicant :**
1)BOROUGE COMPOUNDING SHANGHAI CO. LTD.
Address of Applicant :No. 338 Gangwen Road Fengxian District Shanghai 201413 China
(72)**Name of Inventor :**
1)ZHU Shengquan
2)WANG Aaron

(57) Abstract :
Use of a composition comprising a propylene homopolymer; a non spherical reinforcing material phyllosilicate and compatibilizer to reduce the warpage of injection molded articles.

No. of Pages : 34 No. of Claims : 17

(12) PATENT APPLICATION PUBLICATION
(19) INDIA
(22) Date of filing of Application :31/10/2014
(21) Application No.9126/DELNP/2014 A
(43) Publication Date : 22/05/2015

(54) Title of the invention : NEEDLE PUNCHED CARPET

(51) International classification :D04H1/46,D04H1/74,D04H1/435
(31) Priority Document No :12167999.7
(32) Priority Date :15/05/2012
(33) Name of priority country :EPO
(86) International Application No :PCT/EP2013/059501
Filing Date :07/05/2013
(87) International Publication No :WO 2013/171099
(61) Patent of Addition to Application Number :NA
Filing Date :NA
(62) Divisional to Application Number :NA
Filing Date :NA

(71)**Name of Applicant :**
1)AUTONEUM MANAGEMENT AG
Address of Applicant :Schlosstalstrasse 43 CH 8406 Winterthur Switzerland
(72)**Name of Inventor :**
1)TAYLOR James
2)KIESSIG Michael
3)MEENAKSHISUNDARAM Meganathan

(57) Abstract :
Needle punched carpet for use in a car comprising at least a needle punched facing layer as top layer made of staple fibers characterised in that the staple fibers comprise of hollow fibers and whereby the hollow fiber content is at least more than 45 weight % of the total staple fibers.

No. of Pages : 18 No. of Claims : 16

(12) PATENT APPLICATION PUBLICATION
(19) INDIA
(22) Date of filing of Application :31/10/2014
(21) Application No.9127/DELNP/2014 A
(43) Publication Date : 22/05/2015

(54) Title of the invention : HIGH RESOLUTION IMAGING OF EXTENDED VOLUMES

(51) International classification	:G02B21/10,G01N21/64,G02B21/16
(31) Priority Document No	:1205974.7
(32) Priority Date	:03/04/2012
(33) Name of priority country	:U.K.
(86) International Application No	:PCT/GB2013/050788
Filing Date	:26/03/2013
(87) International Publication No	:WO 2013/150273
(61) Patent of Addition to Application Number	:NA
Filing Date	:NA
(62) Divisional to Application Number	:NA
Filing Date	:NA

(71)**Name of Applicant :**
1)UNIVERSITY COURT OF THE UNIVERSITY OF ST ANDREWS
Address of Applicant :College Gate North Street St Andrews KY16 9AJ U.K.
(72)**Name of Inventor :**
1)DHOLAKIA Kishan
2)VETTENBURG Tom

(57) Abstract :
A light sheet optical system comprising means for forming a light sheet using a non diffractive or quasi non diffractive and/or propagation invariant beam that has an asymmetric intensity beam profile transverse to the direction of propagation such as an Airy beam.

No. of Pages : 24 No. of Claims : 14

(12) PATENT APPLICATION PUBLICATION
(19) INDIA
(22) Date of filing of Application :31/10/2014
(21) Application No.9129/DELNP/2014 A
(43) Publication Date : 22/05/2015

(54) Title of the invention : METHOD FOR UPLINK DOWNLINK INTERFERENCE MITIGATION IN HETEROGENEOUS NETWORK

(51) International classification :H04W72/04,H04W72/08
(31) Priority Document No :NA
(32) Priority Date : -
(33) Name of priority country :
(86) International Application No :PCT/CN2012/075370
Filing Date :11/05/2012
(87) International Publication No :WO 2013/166712
(61) Patent of Addition to Application Number :NA
Filing Date :NA
(62) Divisional to Application Number :NA
Filing Date :NA

(71)**Name of Applicant :**
1)NOKIA SIEMENS NETWORKS OY
Address of Applicant :Karaportti 3 FI 02610 Espoo Finland
(72)**Name of Inventor :**
1)LEI Haipeng
2)SHU Kodo
3)LAN Yuanrong
4)YAO Chunhai
5)LIN Jiezhen

(57) Abstract :
Communication systems such as the long term evolution (LTE) advanced (LTE A) of the third generation partnership project (3 GPP) may benefit from various enliancements. These enhancements can include LTE time division duplex (TDD) enhancements for traffic adaptation and uplink (UL) downlink (DL) interference management. A method can include determining whether a first cell in a network including the first cell and a second cell autonomously selects a time division duplex uplink downlink configuration. The method can also include sending an authority indicator to a base station of the first cell regarding a determination of whether the first cell is to autonomously select the configuration.

No. of Pages : 40 No. of Claims : 64

(12) PATENT APPLICATION PUBLICATION
(19) INDIA
(22) Date of filing of Application :17/10/2014
(21) Application No.8715/DELNP/2014 A
(43) Publication Date : 22/05/2015

(54) Title of the invention : SYSTEM AND METHOD FOR ESTIMATING RECEIVER POSITION USING TIMING DATA ASSOCIATED WITH REFERENCE LOCATIONS

(51) International classification :G01S5/14,G01S5/02,G01S5/00
(31) Priority Document No :61/625610
(32) Priority Date :17/04/2012
(33) Name of priority country :U.S.A.
(86) International Application No :PCT/US2013/036634
Filing Date :15/04/2013
(87) International Publication No :WO 2013/158560
(61) Patent of Addition to Application Number :NA
Filing Date :NA
(62) Divisional to Application Number :NA
Filing Date :NA

(71)**Name of Applicant :**
1)NEXTNAV LLC
Address of Applicant :484 Oakmead Parkway Sunnyvale California 94085 U.S.A.
(72)**Name of Inventor :**
1)SENDONARIS Andrew
2)TANG Hoachen
3)KRASNER Norman

(57) Abstract :
System and method for determining a position location estimate for a remote receiver based on one or more time of arrival measurements transmitted from one or more transmitters and first timing data associated with the one or more transmitters and further associated with one or more reference locations within a reference area of the remote receiver are described.

No. of Pages : 55 No. of Claims : 28

(12) PATENT APPLICATION PUBLICATION
(19) INDIA
(22) Date of filing of Application :17/10/2014
(21) Application No.8717/DELNP/2014 A
(43) Publication Date : 22/05/2015

(54) Title of the invention : COMPRESSOR THRUST BEARING SURGE PROTECTION

(51) International classification :F04D27/02,F04D29/051
(31) Priority Document No :13/482307
(32) Priority Date :29/05/2012
(33) Name of priority country :U.S.A.
(86) International Application No :PCT/US2013/035418
Filing Date :05/04/2013
(87) International Publication No :WO 2013/180833
(61) Patent of Addition to Application Number :NA
Filing Date :NA
(62) Divisional to Application Number :NA
Filing Date :NA

(71)**Name of Applicant :**
1)PRAXAIR TECHNOLOGY INC.
Address of Applicant :39 Old Ridgebury Road Danbury CT 06810 U.S.A.
(72)**Name of Inventor :**
1)ROYAL John H.
2)STANKO Michael J.

(57) Abstract :
The present invention provides a method and apparatus of inhibiting a thrust bearing capacity of a compression system from being exceeded during a surge event in which a thrust bearing is biased with a biasing force to increase the thrust bearing overload margin between the capacity of thrust bearing to absorb axial forces and the greatest force produced during the surge event. This biasing force can be produced by appropriately sizing the high pressure seal on the side of the impeller opposite to the inlet of a compressor of the compression system so that the back disk force produced in the high pressure region of the high pressure seal and the low pressure region located inwardly of the high pressure region creates the desired bias force value and direction.

No. of Pages : 26 No. of Claims : 8

(12) PATENT APPLICATION PUBLICATION
(19) INDIA
(22) Date of filing of Application :17/10/2014
(21) Application No.8718/DELNP/2014 A
(43) Publication Date : 22/05/2015

(54) Title of the invention : A TOY BUILDING SET

(51) International classification	:A63H33/08,A63H33/04,A63H29/20
(31) Priority Document No	:PA 2012 70201
(32) Priority Date	:18/04/2012
(33) Name of priority country	:Denmark
(86) International Application No	:PCT/DK2013/050114
Filing Date	:18/04/2013
(87) International Publication No	:WO 2013/156037
(61) Patent of Addition to Application Number	:NA
Filing Date	:NA
(62) Divisional to Application Number	:NA
Filing Date	:NA

(71)**Name of Applicant :**
1)LEGO A/S
Address of Applicant :Aastvej 1 DK 7190 Billund Denmark
(72)**Name of Inventor :**
1)FREDERIKSEN Per
2)WESTERMANN LARSEN Allan
3)LEGERNES Erik
4)NIELSEN Klaus Elias

(57) Abstract :
A toy building set comprising at least two toy building elements of which the one toy building element is provided with one or more coupling means of first type and the second toy building element is provided with one or more coupling means of second type that is/are configured to be complementary to said coupling means of first type to the effect that they can be interconnected to form a structure wherein the second toy building element comprises a flywheel (10) which is rotatably mounted on the toy building element wherein the flywheel comprises one or more actuator mechanisms (21); and wherein the coupling means and the complementarily configured coupling means are configured such that the second toy building element can be mounted on the first toy building element in two or more different positions.

No. of Pages : 38 No. of Claims : 14

(12) PATENT APPLICATION PUBLICATION
(19) INDIA
(22) Date of filing of Application :17/10/2014
(21) Application No.8719/DELNP/2014 A
(43) Publication Date : 22/05/2015

(54) Title of the invention : A METHOD OF FINDING A FEATURE USING A MACHINE TOOL

(51) International classification :G01B21/04,G05B19/401,B25J9/16
(31) Priority Document No :12250095.2
(32) Priority Date :18/04/2012
(33) Name of priority country :EPO
(86) International Application No :PCT/GB2013/050966
Filing Date :16/04/2013
(87) International Publication No :WO 2013/156767
(61) Patent of Addition to Application Number :NA
Filing Date :NA
(62) Divisional to Application Number :NA
Filing Date :NA

(71)**Name of Applicant :**
1)RENISHAW PLC
Address of Applicant :New Mills Gloucestershire Wotton under Edge Gloucestershire GL12 8JR U.K.
(72)**Name of Inventor :**
1)OULD John
2)TETT Kevin

(57) Abstract :
A method of finding a feature of an object using an analogue probe mounted on a machine tool. The method comprises the analogue probe and/or object following a course of motion which causes the analogue probe s surface sensing region to traverse across the feature to be found a plurality of times whilst approaching the feature over successive traverses so as to ultimately arrive in a position sensing relationship with the feature so as to collect scanned measurement data about the feature along at least part of a traverse.

No. of Pages : 31 No. of Claims : 15

(12) PATENT APPLICATION PUBLICATION
(19) INDIA
(22) Date of filing of Application :22/10/2014
(21) Application No.8886/DELNP/2014 A
(43) Publication Date : 22/05/2015

(54) Title of the invention : PFKFB3 INHIBITOR AND METHODS OF USE AS AN ANTI CANCER THERAPEUTIC

(51) International classification :C07D215/38
(31) Priority Document No :61/617073
(32) Priority Date :29/03/2012
(33) Name of priority country :U.S.A.
(86) International Application No :PCT/US2013/031159
Filing Date :14/03/2013
(87) International Publication No :WO 2013/148228
(61) Patent of Addition to Application Number :NA
Filing Date :NA
(62) Divisional to Application Number :NA
Filing Date :NA

(71)**Name of Applicant :**
1)ADVANCED CANCER THERAPEUTICS LLC
Address of Applicant :429 West Muhammad Ali Boulevard Suite 600 Louisville KY 40202 U.S.A.
(72)**Name of Inventor :**
1)CHAND Pooran
2)TAPOLSKY Gilles H.

(57) Abstract :
A novel compound, (E)- 1 -(pyridyn-4-yl)-3-(7-(trifluoromethyl)quinolin-2-y1)- 5 prop-2-en- 1 -one, is provided herein: 0 (E)- 1 -(pyridyn-4-y1)-3 -(7-(trifluoromethyl)quinolin-2-1-prop-en- 1 -one is an inhibitor of 6-phosphofructo-2-kinase/fructose-2,6-biphosphata3se (PFKFB3) with surprisingly superior efficacy and pharmacodynamic properties in vitro and in vivo. Also provided 10 are pharmaceutical compositions including the compound and methods of use of the compound in treating cancer and tumors in vivo, as well as inhibiting glycolytic flux and PFKFB3 enzymatic activity in cells.

No. of Pages : 43 No. of Claims : 17

(12) PATENT APPLICATION PUBLICATION
(21) Application No.8887/DELNP/2014 A
(19) INDIA
(22) Date of filing of Application :22/10/2014
(43) Publication Date : 22/05/2015

(54) Title of the invention : INJECTION MOLD HAVING A SIMPLIFIED EVAPORATIVE COOLING SYSTEM OR A SIMPLIFIED COOLING SYSTEM WITH EXOTIC COOLING FLUIDS

(51) International classification :B29C45/73,B29C33/04
(31) Priority Document No :61/641349
(32) Priority Date :02/05/2012
(33) Name of priority country :U.S.A.
(86) International Application No :PCT/US2013/039243
Filing Date :02/05/2013
(87) International Publication No :WO 2013/166272
(61) Patent of Addition to Application Number :NA
Filing Date :NA
(62) Divisional to Application Number :NA
Filing Date :NA

(71)**Name of Applicant :**
1)THE PROCTER & GAMBLE COMPANY
Address of Applicant :One Procter & Gamble Plaza Cincinnati Ohio 45202 U.S.A.
(72)**Name of Inventor :**
1)NEUFARTH Ralph Edwin
2)ROBINSON Niall D.
3)SCHARRENBERG Rainer
4)PROSISE Robert Lawrence
5)BERG Charles John Jr.

(57) Abstract :
An injection mold assembly for a high output consumer product injection molding machine the injection mold assembly having a simplified cooling system that is an evaporative cooling system or a cooling system including a hazardous dangerous or expensive cooling fluid. The simplified cooling system has a cooling fluid channel that is confined to a mold support plate.

No. of Pages : 55 No. of Claims : 15

(12) PATENT APPLICATION PUBLICATION
(19) INDIA
(22) Date of filing of Application :22/10/2014
(21) Application No.8888/DELNP/2014 A
(43) Publication Date : 22/05/2015

(54) Title of the invention : COMBINATION CPAP AND RESUSCITATION SYSTEMS AND METHODS

(51) International classification :A61M16/00
(31) Priority Document No :61/622483
(32) Priority Date :10/04/2012
(33) Name of priority country :U.S.A.
(86) International Application No :PCT/NZ2013/000062
Filing Date :10/04/2013
(87) International Publication No :WO 2013/154439
(61) Patent of Addition to Application Number :NA
Filing Date :NA
(62) Divisional to Application Number :NA
Filing Date :NA

(71)**Name of Applicant :**
1)FISHER & PAYKEL HEALTHCARE LIMITED
Address of Applicant :15 Maurice Paykel Place East Tamaki Auckland 2013 New Zealand
(72)**Name of Inventor :**
1)BEAUMONT Christopher Leigh
2)MILLAR Gavin Walsh

(57) Abstract :
A combination positive airway pressure (PAP) or continuous positive airway pressure (CPAP) and resuscitation system and related methods. The systems can be well suited for use in providing CPAP therapy for a neonate or infant patient with the ability to also provide resuscitation therapy at a peak inspiratory pressure (PIP) as needed or desired without switching to another system or switching the patient interface. The system can include an expiratory pressure device capable of regulating a positive end expiration pressure (PEEP) of the system which preferably can also induce pressure oscillations relative to a mean PEEP.

No. of Pages : 30 No. of Claims : 24

(12) PATENT APPLICATION PUBLICATION
(19) INDIA
(22) Date of filing of Application :22/10/2014
(21) Application No.8889/DELNP/2014 A
(43) Publication Date : 22/05/2015

(54) Title of the invention : METALLIC BUNG CLOSURE WITH PROTECTIVE PLASTIC LAYER

(51) International classification :B65D39/08
(31) Priority Document No :20 2012 004 201.7
(32) Priority Date :23/04/2012
(33) Name of priority country :Germany
(86) International Application No :PCT/EP2013/001220
Filing Date :23/04/2013
(87) International Publication No :WO 2013/159913
(61) Patent of Addition to Application Number :NA
Filing Date :NA
(62) Divisional to Application Number :NA
Filing Date :NA

(71)**Name of Applicant :**
1)MAUSER WERKE GMBH
Address of Applicant :Schildgesstrasse 71 163 50321 Br¼hl Germany
(72)**Name of Inventor :**
1)WEYRAUCH Detlev

(57) Abstract :
The present invention relates to a bung closure (10) for the gas tight and liquid tight closure of the bung opening of a container in particular of a steel barrel for storing and for transporting in particular hazardous fluid contents. The bung closure (10) consists substantially of a cup like basic body (12) made of metal and having a disc like base (14) and an upwardly open tubular ring part (16) adjoining the same wherein at least the outside of the ring part (16) has applied to it a plastic layer (18) in which for the purpose of screwing the bung closure (10) into the bung opening of the steel barrel a corresponding thread (20) is formed.

No. of Pages : 24 No. of Claims : 16

(12) PATENT APPLICATION PUBLICATION
(21) Application No.8890/DELNP/2014 A
(19) INDIA
(22) Date of filing of Application :22/10/2014
(43) Publication Date : 22/05/2015

(54) Title of the invention : USER PROGRAMMABLE CAPSULE DEVICE FOR PROGRAMMING CAPSULES AND BEVERAGE PREPARATION MACHINE

(51) International classification :A47J31/44
(31) Priority Document No :12165547.6
(32) Priority Date :25/04/2012
(33) Name of priority country :EPO
(86) International Application No :PCT/EP2013/058414
Filing Date :24/04/2013
(87) International Publication No :WO 2013/160318
(61) Patent of Addition to Application Number :NA
Filing Date :NA
(62) Divisional to Application Number :NA
Filing Date :NA

(71)**Name of Applicant :**
1)NESTEC S.A.
Address of Applicant :Av. Nestl 55 CH 1800 Vevey Switzerland
(72)**Name of Inventor :**
1)JARISCH Christian
2)AGON Fabien Ludovic

(57) Abstract :
The invention pertains to the field of the beverage preparation machines and more particularly to a capsule adapted for delivering a beverage in a beverage producing device comprising: a storage having a memory space for storing information related to preferences of a user of the beverage producing device; a first communication interface configured to: o write in the memory space the information related to the preferences of the user received on the first communication interface; and o allow the reading of the information stored in the memory space.

No. of Pages : 25 No. of Claims : 15

(12) PATENT APPLICATION PUBLICATION
(19) INDIA
(22) Date of filing of Application :27/10/2014
(21) Application No.8956/DELNP/2014 A
(43) Publication Date : 22/05/2015

(54) Title of the invention : SELF LUBRICATED CPVC RESIN WITH IMPROVED PROPERTIES

(51) International classification :C08F214/06,C08F8/20,C08L27/06
(31) Priority Document No :61/640741
(32) Priority Date :01/05/2012
(33) Name of priority country :U.S.A.
(86) International Application No :PCT/US2013/039004
Filing Date :01/05/2013
(87) International Publication No :WO 2013/166107
(61) Patent of Addition to Application Number :NA
Filing Date :NA
(62) Divisional to Application Number :NA
Filing Date :NA

(71)**Name of Applicant :**
1)LUBRIZOL ADVANCED MATERIALS INC.
Address of Applicant :9911 Brecksville Road Cleveland Ohio 44141 3247 U.S.A.
(72)**Name of Inventor :**
1)ZOOK Christopher D.
2)VIELHABER Robert G.

(57) Abstract :
The disclosed technology relates to a compound suitable for preparing articles such as pipe with good physical properties such as impact strength and resistance to environmental stress cracking (ESC). In particular the technology relates to a vinyl chloride copolymer resin such as chlorinated polyvinyl chloride or polyvinyl chloride herein collectively referred to as CPVC that maintains suitable processability at molecular weights above which other vinyl chloride polymer resins will not flow. Furthermore the invention relates to vinyl chloride copolymer compounds containing the vinyl chloride polymer resin and articles made from such compounds which compounds meet 23447 cell classifications under ASTM D1784.

No. of Pages : 20 No. of Claims : 9

(12) PATENT APPLICATION PUBLICATION
(19) INDIA
(22) Date of filing of Application :27/10/2014
(21) Application No.8957/DELNP/2014 A
(43) Publication Date : 22/05/2015

(54) Title of the invention : SAMPLE PREPARATION FOR FLOW CYTOMETRY

(51) International classification :C12Q1/02,C12Q1/68,G01N33/48
(31) Priority Document No :61/620823
(32) Priority Date :05/04/2012
(33) Name of priority country :U.S.A.
(86) International Application No :PCT/US2013/035291
Filing Date :04/04/2013
(87) International Publication No :WO 2013/152203
(61) Patent of Addition to Application Number :NA
Filing Date :NA
(62) Divisional to Application Number :NA
Filing Date :NA

(71)**Name of Applicant :**
1)BECTON DICKINSON AND COMPANY
Address of Applicant :1 Becton Drive Franklin Lakes NJ 07417 U.S.A.
(72)**Name of Inventor :**
1)LI Xiao
2)ZHANG Yongqiang
3)KOPHER Kenneth Anthony
4)MANTLO John D.
5)POPE William Alfred
6)SHI Song
7)YUP Axel A.

(57) Abstract :
Described herein are methods and reagents for identifying and analyzing at least one microorganism (e.g. bacteria) in a sample and reducing the background signal intensity obtained when analyzing the sample by flow cytometry. The sample is prepared by combining the sample with a background signal reducing molecule or with a nucleic acid stain covalently linked to a quencher. A portion of the particulate matter in the sample can optionally be removed with a resin prior to staining with a nucleic acid stain.

No. of Pages : 57 No. of Claims : 32

(12) PATENT APPLICATION PUBLICATION
(19) INDIA
(22) Date of filing of Application :27/10/2014
(21) Application No.8958/DELNP/2014 A
(43) Publication Date : 22/05/2015

(54) Title of the invention : HYDROCARBON BASED LUBRICANTS WITH POLYETHER

(51) International classification :C10M111/04,C10N30/04,C10N40/12
(31) Priority Document No :13/434356
(32) Priority Date :29/03/2012
(33) Name of priority country :U.S.A.
(86) International Application No :PCT/US2013/033965
Filing Date :27/03/2013
(87) International Publication No :WO 2013/148743
(61) Patent of Addition to Application Number :NA
Filing Date :NA
(62) Divisional to Application Number :NA
Filing Date :NA

(71)**Name of Applicant :**
1)AMERICAN CHEMICAL TECHNOLOGIES INC.
Address of Applicant :485 E. Van Riper Rd. Fowlerville MI 48836 U.S.A.
(72)**Name of Inventor :**
1)KOVANDA Kevin P.
2)LATUNSKI Mark D.

(57) Abstract :
Disclosed are methods in which an aliphatic polyether selected from polyalkylene oxides with monomer units having (3 to 6) carbon atoms and polyvinyl ethers with ether groups having (2) to about (8) carbon atoms is added to a hydrocarbon lubricant; such methods in which the hydrocarbon lubricant comprises oxidation products that are dissolved by the addition of the polyether or polyvinyl ether; hydrocarbon lubricants containing a polyether selected from polyalkylene oxides with monomer units having (3) to about (10) carbon atoms and polyvinyl ethers with ether groups having (2) to about (8) carbon atoms; methods of lubricating machines with these lubricants; lubrication systems including these hydrocarbon lubricants; and machines including these lubrication systems.

No. of Pages : 25 No. of Claims : 15

(12) PATENT APPLICATION PUBLICATION
(19) INDIA
(22) Date of filing of Application :27/10/2014
(21) Application No.8959/DELNP/2014 A
(43) Publication Date : 22/05/2015

(54) Title of the invention : ACTIVATOR COMPOSITIONS THEIR PREPARATION AND THEIR USE IN CATALYSTS

(51) International classification :C08F210/16,C08F4/6592,B01J31/02
(31) Priority Document No :61/639206
(32) Priority Date :27/04/2012
(33) Name of priority country :U.S.A.
(86) International Application No :PCT/US2013/031537
Filing Date :14/03/2013
(87) International Publication No :WO 2013/162745
(61) Patent of Addition to Application Number :NA
Filing Date :NA
(62) Divisional to Application Number :NA
Filing Date :NA

(71)**Name of Applicant :**
1)ALBEMARLE CORPORATION
Address of Applicant :451 Florida Street Baton Rouge LA 70801 U.S.A.
(72)**Name of Inventor :**
1)DIEFENBACH Steven P.
2)LI Min
3)THORN Matthew Grant
4)LUO Lubin

(57) Abstract :
This invention provides activator precursor compositions and activator compositions. The activator precursor compositions are formed from a support material a linking compound and polyfunctional compounds having at least two aromatic groups in which at least two of said aromatic groups each has at least one polar moiety thereon. The activator compositions are formed from a support material a linking compound an aluminoxane and a polyfunctional compound having at least two aromatic groups in which at least two of said aromatic groups each has at least one polar moiety thereon. Also provided are catalyst compositions processes for forming catalyst compositions and polymerization processes utilizing the catalyst compositions of this invention.

No. of Pages : 50 No. of Claims : 31

(12) PATENT APPLICATION PUBLICATION
(19) INDIA
(22) Date of filing of Application :17/10/2014
(21) Application No.8752/DELNP/2014 A
(43) Publication Date : 22/05/2015

(54) Title of the invention : BIOARTIFICIAL FILTRATION ORGAN

(51) International classification :C12M3/00,C12N5/071,A61L27/38
(31) Priority Document No :61/635043
(32) Priority Date :18/04/2012
(33) Name of priority country :U.S.A.
(86) International Application No :PCT/US2013/031874
Filing Date :15/03/2013
(87) International Publication No :WO 2013/158283
(61) Patent of Addition to Application Number :NA
Filing Date :NA
(62) Divisional to Application Number :NA
Filing Date :NA

(71)**Name of Applicant :**
1)THE GENERAL HOSPITAL CORPORATION
Address of Applicant :55 Fruit Street Boston Massachusetts 02114 U.S.A.
(72)**Name of Inventor :**
1)OTT Harald C.

(57) Abstract :
A bioartificial filtration organ can be produced from an organ scaffold by re seeding the scaffold with endothelial cells or cell progenitors and with epithelial cells or cell progenitors in a negative pressure environment. The negative pressure encourages the re seeding over a greater extent of the scaffold.

No. of Pages : 49 No. of Claims : 29

(12) PATENT APPLICATION PUBLICATION
(19) INDIA
(22) Date of filing of Application :17/10/2014
(21) Application No.8753/DELNP/2014 A
(43) Publication Date : 22/05/2015

(54) Title of the invention : METHOD AND APPARATUS

(51) International classification :B01F11/02,A61K9/00
(31) Priority Document No :1205632.1
(32) Priority Date :30/03/2012
(33) Name of priority country :U.K.
(86) International Application No :PCT/GB2013/050847
Filing Date :28/03/2013
(87) International Publication No :WO 2013/144655
(61) Patent of Addition to Application Number :NA
Filing Date :NA
(62) Divisional to Application Number :NA
Filing Date :NA

(71)**Name of Applicant :**
1)VECTURA LIMITED
Address of Applicant :One Prospect West Chippenham Wiltshire SN14 6FH U.K.
(72)**Name of Inventor :**
1)GREEN Matthew

(57) Abstract :
A method is disclosed for making a pharmaceutical composition for pulmonary administration the method comprising a step in which an inhalable pharmaceutically active material is acoustically blended in a resonant acoustic blender. The invention also relates to compositions for inhalation prepared by the method.

No. of Pages : 65 No. of Claims : 59

(12) PATENT APPLICATION PUBLICATION
(19) INDIA
(22) Date of filing of Application :17/10/2014
(21) Application No.8736/DELNP/2014 A
(43) Publication Date : 22/05/2015

(54) Title of the invention : METHOD FOR TREATING CLAY AND CLAY BEARING AGGREGATES AND COMPOSITIONS THEREFOR

(51) International classification :C08F265/06,C04B24/26
(31) Priority Document No :61/642665
(32) Priority Date :04/05/2012
(33) Name of priority country :U.S.A.
(86) International Application No :PCT/EP2013/059303
Filing Date :03/05/2013
(87) International Publication No :WO 2013/164471
(61) Patent of Addition to Application Number :NA
Filing Date :NA
(62) Divisional to Application Number :NA
Filing Date :NA

(71)**Name of Applicant :**
1)W.R. GRACE & CO. CONN.
Address of Applicant :7500 Grace Drive Columbia Maryland 21044 U.S.A.
2)LBESTE GAT LTD.
(72)**Name of Inventor :**
1)KUO Lawrence
2)TREGGER Nathan
3)LEE Ho
4)KWON O il

(57) Abstract :
The present invention provides compositions and methods involving the use of a carboxylate graft polymer having high molecular weight and low ratio of acid to polyoxyalkylene groups. Such clay mitigation is particularly useful for treating clay and clay bearing aggregates particularly those aggregates used for construction purposes. The present invention minimizes the need to wash the aggregates thus preserving fine aggregates (fines) content in construction materials and thereby beneficiating the performance and/or properties of construction materials containing the clay bearing aggregates.

No. of Pages : 28 No. of Claims : 21

(12) PATENT APPLICATION PUBLICATION
(19) INDIA
(22) Date of filing of Application :17/10/2014
(21) Application No.8737/DELNP/2014 A
(43) Publication Date : 22/05/2015

(54) Title of the invention : OPTIMAL CONTACT MECHANICS FOR A THA

(51) International classification :A61F2/36,A61F2/34
(31) Priority Document No :13/466944
(32) Priority Date :08/05/2012
(33) Name of priority country :U.S.A.
(86) International Application No :PCT/US2013/040107
Filing Date :08/05/2013
(87) International Publication No :WO 2013/169881
(61) Patent of Addition to Application Number :NA
Filing Date :NA
(62) Divisional to Application Number :NA
Filing Date :NA

(71)**Name of Applicant :**
1)DEPUY (IRELAND)
Address of Applicant :Loughbeg Ringaskiddy County Cork Ireland
(72)**Name of Inventor :**
1)KOMISTEK Richard D.

(57) Abstract :
A prosthetic femoral component comprising: (a) a femoral shaft (234); (b) a femoral neck (220) operatively coupled to the femoral shaft; and (c) a femoral ball (238) operatively coupled to the femoral shaft where a neck axis (230) extending longitudinally through the femoral neck is angled at no greater than thirty five degrees with respect to a femoral shaft axis (232) extending longitudinally through the femoral shaft.

No. of Pages : 76 No. of Claims : 20

(12) PATENT APPLICATION PUBLICATION
(19) INDIA
(22) Date of filing of Application :17/10/2014
(21) Application No.8738/DELNP/2014 A
(43) Publication Date : 22/05/2015

(54) Title of the invention : PREFORMED STABILIZERS USEFUL FOR THE PRODUCTION OF POLYMER POLYOLS AND POLYMER POLYOLS PRODUCED THEREFROM

(51) International classification	:C08F265/04,C08F20/10,C08F2/38
(31) Priority Document No	:13/449492
(32) Priority Date	:18/04/2012
(33) Name of priority country	:U.S.A.
(86) International Application No	:PCT/US2013/036276
Filing Date	:12/04/2013
(87) International Publication No	:WO 2013/158471
(61) Patent of Addition to Application Number	:NA
Filing Date	:NA
(62) Divisional to Application Number	:NA
Filing Date	:NA

(71)**Name of Applicant :**
1)BAYER MATERIALSCIENCE LLC
Address of Applicant :100 Bayer Road Pittsburgh PA 15205 9741 U.S.A.
(72)**Name of Inventor :**
1)ENGLAND Jiong
2)ADKINS Rick L.
3)NEAL Brian L.
4)GILL William A.

(57) Abstract :
Preformed stabilizers useful for the production of low viscosity high solids polymer polyols are produced by free radical polymerization of: (a) at least one ethylenically unsaturated macromolecule or macromer with (b) at least three different ethylenically unsaturated monomers in the presence of (c) at least one free radical polymerization initiator and optionally (d) a liquid diluent and optionally (e) a chain transfer agent.

No. of Pages : 37 No. of Claims : 14

(12) PATENT APPLICATION PUBLICATION
(19) INDIA
(22) Date of filing of Application :15/10/2014
(21) Application No.8637/DELNP/2014 A
(43) Publication Date : 22/05/2015

(54) Title of the invention : POLY(ACRYLIC ACID) FROM BIO BASED ACRYLIC ACID AND ITS DERIVATIVES

(51) International classification	:C08F220/06,A61L15/60,C08L33/02
(31) Priority Document No	:61/623054
(32) Priority Date	:11/04/2012
(33) Name of priority country	:U.S.A.
(86) International Application No	:PCT/US2013/036162
Filing Date	:11/04/2013
(87) International Publication No	:WO 2013/155296
(61) Patent of Addition to Application Number	:NA
Filing Date	:NA
(62) Divisional to Application Number	:NA
Filing Date	:NA

(71)**Name of Applicant :**
1)THE PROCTER & GAMBLE COMPANY
Address of Applicant :One Procter & Gamble Plaza Cincinnati Ohio 45202 U.S.A.
(72)**Name of Inventor :**
1)GODLEWSKI Jane Ellen
2)LINGOES Janette Villalobos
3)COLLIAS Dimitris Ioannis
4)MEYER Axel
5)DZIEZOK Peter
6)VELASQUEZ Juan Esteban

(57) Abstract :
Bio based glacial acrylic acid produced from hydroxypropionic acid hydroxypropionic acid derivatives or mixtures thereof and having impurities of hydroxypropionic acid hydroxypropionic acid derivatives or mixtures thereof is polymerized to poly(acrylic acid) or superabsorbent polymer using the same processes as petroleum derived glacial acrylic acid.

No. of Pages : 52 No. of Claims : 15

(12) PATENT APPLICATION PUBLICATION
(19) INDIA
(22) Date of filing of Application :15/10/2014
(21) Application No.8638/DELNP/2014 A
(43) Publication Date : 22/05/2015

(54) Title of the invention : METHODS FOR TRANSFERRING DISCRETE ARTICLES

(51) International classification :A61F13/15,B65G47/84
(31) Priority Document No :13/447531
(32) Priority Date :16/04/2012
(33) Name of priority country :U.S.A.
(86) International Application No :PCT/US2013/036716
Filing Date :16/04/2013
(87) International Publication No :WO 2013/158598
(61) Patent of Addition to Application Number :NA
Filing Date :NA
(62) Divisional to Application Number :NA
Filing Date :NA

(71)**Name of Applicant :**
1)THE PROCTER & GAMBLE COMPANY
Address of Applicant :One Procter & Gamble Plaza Cincinnati Ohio 45202 U.S.A.
(72)**Name of Inventor :**
1)PAPSDORF Clifford Theodore
2)SCHNEIDER Uwe

(57) Abstract :
The present disclosure is directed to a method of transferring discrete articles from or to a moving carrier member using a transfer assembly. The transfer assembly comprises a frame defining a rotation axis and a transfer member comprising a transfer surface configured to receive one of the discrete articles. The method comprises rotating the transfer member about the rotation axis and maintaining the transfer surface at a substantially constant minimum distance away from the moving carrier member at the point of discrete article transfer.

No. of Pages : 97 No. of Claims : 8

(12) PATENT APPLICATION PUBLICATION
(19) INDIA
(22) Date of filing of Application :15/10/2014
(21) Application No.8639/DELNP/2014 A
(43) Publication Date : 22/05/2015

(54) Title of the invention : APPARATUSES FOR TRANSFERRING DISCRETE ARTICLES

(51) International classification :B65G47/84,A61F13/15
(31) Priority Document No :13/447585
(32) Priority Date :16/04/2012
(33) Name of priority country :U.S.A.
(86) International Application No :PCT/US2013/036718
Filing Date :16/04/2013
(87) International Publication No :WO 2013/158599
(61) Patent of Addition to Application Number :NA
Filing Date :NA
(62) Divisional to Application Number :NA
Filing Date :NA

(71)**Name of Applicant :**
1)THE PROCTER & GAMBLE COMPANY
Address of Applicant :One Procter & Gamble Plaza Cincinnati Ohio 45202 U.S.A.
(72)**Name of Inventor :**
1)PAPSDORF Clifford Theodore
2)SCHNEIDER Uwe

(57) Abstract :
The present disclosure is directed to a transfer assembly (100) for transferring discrete articles (102) from or to a moving carrier member (104 106). The transfer assembly comprises a frame (130) defining a rotation axis(132). The frame comprises a track (134) having a circumferential shape surrounding the rotation axis. The transfer assembly comprises transfer members (112) movably engaged with the track each having a transfer surface (136). The transfer assembly comprises a wheel (138) engaged with the frame and configured to rotate about the rotation axis. The wheel is engaged with the transfer members. As the wheel rotates about the rotation axis the transfer members circumnavigate about a path about the rotation axis in correspondence with the track. The shape of the track causes the transfer surfaces to move radially relative to the rotation axis while the transfer surfaces are maintained a substantially constant distance away from the moving carrier member at the point of discrete article transfer.

No. of Pages : 99 No. of Claims : 13

(12) PATENT APPLICATION PUBLICATION
(21) Application No.1147/MUM/2013 A
(19) INDIA
(22) Date of filing of Application :26/03/2013
(43) Publication Date : 22/05/2015

(54) Title of the invention : A SYSTEM, A DEVICE AND A METHOD FOR ENHANCED & FAST ADJUSTMENT OF ELECTRICAL LOAD IN ELECTRICAL TESTING OF SWITCHGEARS

(51) International classification	:H02H3/00, G01R31/327,
(31) Priority Document No	:NA
(32) Priority Date	:NA
(33) Name of priority country	:NA
(86) International Application No	:NA
Filing Date	:NA
(87) International Publication No	: NA
(61) Patent of Addition to Application Number	:NA
Filing Date	:NA
(62) Divisional to Application Number	:NA
Filing Date	:NA

(71)**Name of Applicant :**
1)LARSEN & TOUBRO LIMITED
Address of Applicant :LARSEN & TOUBRO LIMITED, L & T HOUSE, BALLARD ESTATE, MUMBAI 400 001, STATE OF MAHARASHTRA, INDIA
(72)**Name of Inventor :**
1)MALYAN, JYOTI
2)BORATE, SOMNATH, VISHWANATH
3)BURA, VIRENDER, SINGH

(57) Abstract :
The present invention provides a system for adjustment of electrical load in electrical testing of switchgear(s). The system comprises:an impendence adjusting arrangement comprises an impedance tap(s), a shorting bus bar and a mechanical lock. The shorting bus bar with the mechanical lock connected to the impedance tap for adjusting the impedance value in the switchgear. The system further comprisesa resistance adjusting arrangement comprises at least a resistance, a slider and a runner. The slider is moving over the resistor using the runner to facilitatethe resistance adjustment in the switchgear.

No. of Pages : 14 No. of Claims : 5

(12) PATENT APPLICATION PUBLICATION
(19) INDIA
(22) Date of filing of Application :14/08/2014
(21) Application No.1643/MUMNP/2014 A
(43) Publication Date : 22/05/2015

(54) Title of the invention : WIRELESS COMMUNICATIONS SYSTEM CONTROL METHOD AND PROGRAM

(51) International classification :H04W56/00,G08G1/09,H04W4/04
(31) Priority Document No :2012-035563
(32) Priority Date :21/02/2012
(33) Name of priority country :Japan
(86) International Application No :PCT/JP2013/053833
Filing Date :18/02/2013
(87) International Publication No :WO 2013/125479
(61) Patent of Addition to Application Number :NA
Filing Date :NA
(62) Divisional to Application Number :NA
Filing Date :NA

(71)**Name of Applicant :**
1)MITSUBISHI HEAVY INDUSTRIES LTD.
Address of Applicant :16 5 Konan 2 chome Minato ku Tokyo 1088215 Japan
(72)**Name of Inventor :**
1)YASUI Jun
2)TOMINAGA Masatoshi
3)MURATA Hideaki
4)NAGATA Takeshi
5)TAKEUCHI Hisaji
6)HAYAKAWA Yoshifumi

(57) Abstract :
A wireless communications system is provided with a plurality of wireless communications apparatuses for respective traffic lanes on a road that perform wireless communications with a vehicle travelling in any of the traffic lanes. Each of the wireless communications apparatuses performs transmission and reception with the vehicle travelling in the corresponding traffic lane by shifting the timing of a transmission/reception control period in which the transmission and reception with the vehicle is performed in a control channel having a first frequency and the timing of a transmission/reception control period in which the transmission and reception with the vehicle is performed in a service channel having a frequency that is different from the frequency of the first frequency from the timings for the other wireless communications apparatuses.

No. of Pages : 36 No. of Claims : 9

(12) PATENT APPLICATION PUBLICATION
(19) INDIA
(22) Date of filing of Application :14/08/2014
(21) Application No.1644/MUMNP/2014 A
(43) Publication Date : 22/05/2015

(54) Title of the invention : MULTI RADIO INTERFERENCE MITIGATION VIA FREQUENCY SELECTIVITY

(51) International classification :H04W16/14,H04W72/12
(31) Priority Document No :61/607816
(32) Priority Date :07/03/2012
(33) Name of priority country :U.S.A.
(86) International Application No :PCT/US2013/025429
Filing Date :08/02/2013
(87) International Publication No :WO 2013/133928
(61) Patent of Addition to Application Number :NA
Filing Date :NA
(62) Divisional to Application Number :NA
Filing Date :NA

(71)**Name of Applicant :**
1)QUALCOMM INCORPORATED
Address of Applicant :ATTN: International IP Administration 5775 Morehouse Drive San Diego California 92121 U.S.A.
(72)**Name of Inventor :**
1)CHRISIKOS George
2)WIETFELDT Richard Dominic

(57) Abstract :
A user equipment (UE) may mitigate interference on the user equipment with two or more radios. In some instances the UE may determine when communications of the two or more radios experience interference in which two radios of the two or more radios operate with the same radio access technology. Further the UE may alter an operating frequency of a first radio of the two radios to mitigate the interference.

No. of Pages : 54 No. of Claims : 28

(12) PATENT APPLICATION PUBLICATION
(21) Application No.1645/MUMNP/2014 A
(19) INDIA
(22) Date of filing of Application :14/08/2014
(43) Publication Date : 22/05/2015

(54) Title of the invention : ZOOM LENS APPARATUS WITH FOCUS ADJUSTING AND OPTICAL IMAGING DEVICE THEREWITH

(51) International classification :G02B7/10,G03B13/34
(31) Priority Document No :201210013791.2
(32) Priority Date :17/01/2012
(33) Name of priority country :China
(86) International Application No :PCT/CN2013/070515
Filing Date :16/01/2013
(87) International Publication No :WO 2013/107342
(61) Patent of Addition to Application Number :NA
Filing Date :NA
(62) Divisional to Application Number :NA
Filing Date :NA

(71)**Name of Applicant :**
1)BOLY MEDIA COMMUNICATIONS (SHENZHEN) CO. LTD.
Address of Applicant :Suite A B 2F 2nd Building Shanshui Building Nanshan Yungu Innovation Industrial Park No. 1183 Liuxian Blvd Taoyuan Street Nanshan District Shenzhen Guangdong 518055 China
(72)**Name of Inventor :**
1)HU Xiaoping
2)SHEN Xia
3)CHEN Lihua

(57) Abstract :
A zoom lens apparatus with focus adjusting and an optical imaging device therewith are provided wherein a combination of screw driven ultra sonic motor and voice coil motor is adopted to drive different optical lens sets (25 61). For the ultra sonic motor the screw motion of the rotor (23) is transformed into a simple rectilinear motion by providing a third tube (24) placed in the rotor (23) and radially fixed relative to the stator (22). Thus the zoom lens apparatus with focus adjusting produced with the combination can well maintain the stability of the optical axis moreover the combination of different driving methods integrates and makes better use of lens sets of different functions and hence simplifies the overall structure.

No. of Pages : 16 No. of Claims : 12

(12) PATENT APPLICATION PUBLICATION
(19) INDIA
(22) Date of filing of Application :14/08/2014
(21) Application No.1647/MUMNP/2014 A
(43) Publication Date : 22/05/2015

(54) Title of the invention : CONTROL CIRCUIT

(51) International classification :H02H7/26,H02J3/36
(31) Priority Document No :NA
(32) Priority Date :NA
(33) Name of priority country :NA
(86) International Application No :PCT/EP2012/053571
Filing Date :01/03/2012
(87) International Publication No :WO 2013/127461
(61) Patent of Addition to Application Number :NA
Filing Date :NA
(62) Divisional to Application Number :NA
Filing Date :NA

(71)**Name of Applicant :**
1)ALSTOM TECHNOLOGY LTD
Address of Applicant :Brown Boveri Strasse 7 CH 5400 Baden Switzerland
(72)**Name of Inventor :**
1)OKAEME Nnamdi
2)TRAINER David Reginald
3)DAVIDSON Colin Charnock

(57) Abstract :
The control circuit (30) comprises first and second primary terminals (32 34) for connection to a DC network (40 42) the first and second primary terminals (32 34) having a plurality of modules (44a 44b) and a plurality of primary energy conversion elements (46 48) connected in series therebetween to define a current transmission path each module (44a 44b) including at least one energy storage device (52) each energy storage device (52) being selectively removable from the current transmission path. The control circuit (30) further includes a secondary terminal (36) connected in series between the first and second primary terminals (32 34) the plurality of modules (44a 44b) including at least one first module (44a) and at least one second module (44b) the or each first module (44a) being connected in series with at least one primary energy conversion element (46) between the first primary terminal (32) and the secondary terminal (36) to define a first current transmission path portion the or each second module (44b) being connected in series with at least one other primary energy conversion element (48) between the second primary terminal (34) and the secondary terminal (36) to define a second current transmission path portion. The control circuit (30) further includes at least one auxiliary energy conversion element (54) and an auxiliary terminal (38) the or each auxiliary energy conversion element (54) being connected in series between the secondary and auxiliary terminals (36 38) the auxiliary terminal (54) being for connection to ground.

No. of Pages : 43 No. of Claims : 13

(12) PATENT APPLICATION PUBLICATION
(19) INDIA
(22) Date of filing of Application :12/11/2012
(21) Application No.2549/MUMNP/2012 A
(43) Publication Date : 22/05/2015

(54) Title of the invention : METHOD AND SYSTEM FOR RESPONDER-AWARE RELAY STATION SELECTION IN WIRELESS COMMUNICATION NETWORKS

(51) International classification	:H04W88/04, H04B7/14
(31) Priority Document No	:61/324,825
(32) Priority Date	:16/04/2010
(33) Name of priority country	:U.S.A.
(86) International Application No	:PCT/KR2011/002711
Filing Date	:15/04/2011
(87) International Publication No	:WO/2011/129654
(61) Patent of Addition to Application Number	:NA
Filing Date	:NA
(62) Divisional to Application Number	:NA
Filing Date	:NA

(71)**Name of Applicant :**
1)SAMSUNG ELECTRONICS CO. LTD.
Address of Applicant :129 Samsung-ro Yeongtong-gu Suwon-si Gyeonggi-do 443-742 Republic of Korea
(72)**Name of Inventor :**
1)SHAO Huai-Rong
2)HSU Ju-Lan
3)NGO Chiu

(57) Abstract :
Responder-aware relay station selection in a wireless communication network is provided. One implementation includes evaluating operational parameters of multiple candidate wireless relay stations and selecting a wireless relay station among the multiple candidate wireless relay stations based on the evaluation. A wireless communication is transmitted to the selected wireless relay station over a wireless communication medium.

No. of Pages : 27 No. of Claims : 32

(12) PATENT APPLICATION PUBLICATION
(19) INDIA
(22) Date of filing of Application :31/12/2012
(21) Application No.2925/MUMNP/2012 A
(43) Publication Date : 22/05/2015

(54) Title of the invention : CRYSTALLINE FORM OF PRULIFLOXACIN AND PROCESSES FOR ITS PREPARATION

(51) International classification	:C07D513/04, A61K31/496
(31) Priority Document No	:1920/MUM/2010
(32) Priority Date	:30/06/2010
(33) Name of priority country	:India
(86) International Application No	:PCT/GB2011/000982
Filing Date	:30/06/2011
(87) International Publication No	:WO/2012/001357
(61) Patent of Addition to Application Number	:NA
Filing Date	:NA
(62) Divisional to Application Number	:NA
Filing Date	:NA

(71)**Name of Applicant :**
1)CIPLA LIMITED
Address of Applicant :Mumbai Central Mumbai 400 008 Maharashtra India
(72)**Name of Inventor :**
1)PATHI Srinivas Laxminarayan
2)RAO Dharmaraj Ramachandra
3)KANKAN Rajendra
4)CHINIMILLI Venugopalarao

(57) Abstract :
The present invention relates to a crystalline polymorphic form of 6-fluoro-1-methyl-7- {4-[(5-methyl-2-oxo-1,3-dioxol-4-yl)methyl]piperazin-1-yl}-4-oxo-4H-[1,3]-thiazeto-[3,2- a]-quinoline-3-carboxylic acid (prulifloxacin). More specifically, the invention relates to a crystalline form of prulifloxacin (herein referred to as Form A), and a method for preparing the crystalline Form A. The present invention further provides a pharmaceutical formulation comprising the novel form of prulifloxacin.

No. of Pages : 36 No. of Claims : 37

(12) PATENT APPLICATION PUBLICATION
(19) INDIA
(22) Date of filing of Application :31/12/2012
(21) Application No.2928/MUMNP/2012 A
(43) Publication Date : 22/05/2015

(54) Title of the invention : METHOD AND APPRATUS FOR BUNDLING RESOURCE BLOCKS IN WIRELESS COMMUNICATION

(51) International classification	:H04B7/04, H04L5/00
(31) Priority Document No	:61/356,171
(32) Priority Date	:18/06/2010
(33) Name of priority country	:U.S.A.
(86) International Application No	:PCT/US2011/041000
Filing Date	:17/06/2011
(87) International Publication No	:WO/2011/160097
(61) Patent of Addition to Application Number	:NA
Filing Date	:NA
(62) Divisional to Application Number	:NA
Filing Date	:NA

(71)**Name of Applicant :**
1)QUALCOMM INCORPORATED
Address of Applicant :Attn: International IP Administration 5775 Morehouse Drive San Diego California 92121-1714 United States of America
(72)**Name of Inventor :**
1)LUO Tao
2)CHEN Wanshi
3)GAAL Peter
4)ZHANG Xiaoxia
5)MONTOJO Juan

(57) Abstract :
Methods and apparatuses are provided for bundling resource blocks (RB) for varying bandwidth scenarios in wireless communication. Where multiple access points form a coordinated multiple point (CoMP) set for a device the access points may be configured to use a common RB bundling size for preceding transmissions to the device in another aspect where a device is allocated a bandwidth and a bandwidth extension a RB bundling size may be determined for the bandwidth and bandwidth extension jointly or individually. The RB bundling size may be determined based on the bandwidth or on the bandwidth and the bandwidth extension.

No. of Pages : 47 No. of Claims : 52

(12) PATENT APPLICATION PUBLICATION
(19) INDIA
(22) Date of filing of Application :08/08/2014
(21) Application No.1610/MUMNP/2014 A
(43) Publication Date : 22/05/2015

(54) Title of the invention : STEREOLITHOGRAPHY METHOD FOR PRODUCING A THREE DIMENSIONAL OBJECT COMPRISING A MOVEMENT ACCORDING TO WHICH A SUPPORTING SURFACE FOR SAID OBJECT INTERMITTENTLY APPROACHES THE BOTTOM OF A CONTAINER AND STEREOLITHOGRAPHY MACHINE USING SAID METHOD

(51) International classification :B29C67/00
(31) Priority Document No :VI2012A000172
(32) Priority Date :16/07/2012
(33) Name of priority country :Italy
(86) International Application No :PCT/IB2013/001540
Filing Date :15/07/2013
(87) International Publication No :WO 2014/013312
(61) Patent of Addition to Application Number :NA
Filing Date :NA
(62) Divisional to Application Number :NA
Filing Date :NA

(71)**Name of Applicant :**
1)DWS SRL
Address of Applicant :Via Lago Di Levico 3 I 36010 Zane (VI) Italy
(72)**Name of Inventor :**
1)FORTUNATO Roberto
2)ZENERE Sergio

(57) Abstract :
The invention is a method for producing a three dimensional object in layers through stereolithography comprising the following operations: moving a supporting surface (6a 7a) near the bottom (2a) of a container (2) containing a liquid substance (3) so as to arrange it in a predefined operating position (17); selectively irradiating a layer (6) of liquid substance (3) with predefined radiation (4) in such a way as to solidify it against the supporting surface (6a 7a). The approaching movement (11) comprises a plurality of approaching moves (12 12a 12b 12c) having corresponding predefined lengths (13 13a 13b 13c) spaced by corresponding intermediate stops (14 14a 14b) for corresponding predefined time intervals (15 15a 15b) the intermediate stops (14 14a 14b) being carried out when the supporting surface (6a 7a) is at least partially immersed in the liquid substance (3).

No. of Pages : 26 No. of Claims : 12

(12) PATENT APPLICATION PUBLICATION
(19) INDIA
(22) Date of filing of Application :28/04/2014
(21) Application No.785/MUMNP/2014 A
(43) Publication Date : 22/05/2015

(54) Title of the invention : HOT FORGED COPPER ALLOY ARTICLE

(51) International classification :C22C9/04,C22F1/08,C22F1/00
(31) Priority Document No :2011-242413
(32) Priority Date :04/11/2011
(33) Name of priority country :Japan
(86) International Application No :PCT/JP2012/078508
Filing Date :02/11/2012
(87) International Publication No :WO 2013/065830
(61) Patent of Addition to Application Number :NA
Filing Date :NA
(62) Divisional to Application Number :NA
Filing Date :NA

(71)**Name of Applicant :**
1)MITSUBISHI SHINDOH CO. LTD.
Address of Applicant :4 7 35 Kitashinagawa Shinagawa ku Tokyo 1408550 Japan
(72)**Name of Inventor :**
1)OISHI Keiichiro
2)OKA Takayuki
3)OIKAWA Shin

(57) Abstract :
A tubular hot forged copper alloy article has an alloy composition comprising 59.0 84.0 mass% of Cu 0.003 0.3 mass% of Pb and a remainder made up by Zn and unavoidable impurities wherein the content of Cu [Cu] (mass%) and the content of Pb [Pb] (mass%) have a relationship represented by the formula: 59 = ([Cu]+0.5—[Pb]) = 64 the shape of the article fulfills the formulae: 0.4 = (average inner diameter)/(average outer diameter) = 0.92 0.04 = (average thickness)/(average outer diameter) = 0.3 and 1 = (length in tube axis direction)/(average thickness) = 10 and a forging material that is not hot forged yet has a tubular form fulfills the formulae: 0.3 = (average inner diameter/average outer diameter) = 0.88 0.06 = (average thickness)/(average outer diameter) = 0.35 and 0.8 = (length in tube axis direction)/(average thickness) = 12 and fulfills the formulae: 0 = (degree of thickness unevenness) = 30% and 0 = (degree of thickness unevenness) = 75—1/((length in tube axis direction)/(average thickness)) at any position located in the tube axis direction.

No. of Pages : 93 No. of Claims : 11

(12) PATENT APPLICATION PUBLICATION
(19) INDIA
(22) Date of filing of Application :20/03/2013
(21) Application No.878/MUM/2013 A
(43) Publication Date : 22/05/2015

(54) Title of the invention : A UNIQUE EMERGENCY LIGHT

(51) International classification	:H01M 10/00 ,H01J 61/96
(31) Priority Document No	:NA
(32) Priority Date	:NA
(33) Name of priority country	:NA
(86) International Application No	:NA
Filing Date	:NA
(87) International Publication No	: NA
(61) Patent of Addition to Application Number	:NA
Filing Date	:NA
(62) Divisional to Application Number	:NA
Filing Date	:NA

(71)**Name of Applicant :**
1)Bhavsar Swapnil Chandrakant
Address of Applicant :M-64/768, Chitrakut Apartment Sola Road, Naranpura Ahmedabad-380063 Gujarat, India.
2)Jain Anjil Anvin
3)Shah Parin Kamalkumar
4)Dr. Vasani Rupesh Parmanand
(72)**Name of Inventor :**
1)Patel Bhupendra Laljibhai
2)Bhavsar Swapnil Chandrakant
3)Jain Anjil Anvin
4)Shah Parin Kamalkumar
5)Dr. Vasani Rupesh Parmanand

(57) Abstract :
The present invention a pencil lead is connected with the 12V DC lead acid battery such that the a glass beaker is kept on the lead so the heat energy is converted into light energy.

No. of Pages : 12 No. of Claims : 3

(12) PATENT APPLICATION PUBLICATION
(21) Application No.879/MUM/2013 A
(19) INDIA
(22) Date of filing of Application :20/03/2013
(43) Publication Date : 22/05/2015

(54) Title of the invention : A NOVEL FOOT OPERATED WASH BASIN

(51) International classification :E03C1/05
(31) Priority Document No :NA
(32) Priority Date :NA
(33) Name of priority country :NA
(86) International Application No :NA
Filing Date :NA
(87) International Publication No : NA
(61) Patent of Addition to Application Number :NA
Filing Date :NA
(62) Divisional to Application Number :NA
Filing Date :NA

(71)**Name of Applicant :**
1)Dr. Vasani Rupesh Parmanand
Address of Applicant :07, Aditraj Bunglows, Near Nandanvan-5, B/h Kalatirth Apartment, Prernatirth Derasar Road, Jodhpur, Ahmedabad-380015. Gujarat, India.
2)Shah Parin Kamalkumar
3)Jain Anjil Anvin
4)Bhavsar Swapnil Chandrakant
(72)**Name of Inventor :**
1)Shah Parin Kamalkumar
2)Jain Anjil Anvin
3)Bhavsar Swapnil Chandrakant
4)Patel Bhupendra Laljibhai
5)Dr. Vasani Rupesh Parmanand

(57) Abstract :
The present invention of ˜A Novel Wash Basin™ is a specially designed wash basin that saves water consumption. The general wash basins (sinks) use more amount of water then we required. For example for washing hands first one opens tap, since then the tap is opened and water is flowing while he takes soap and again washes the hands. But this invention one can regulate the flow of water at one™s convenience by using a specially designed foot operated ˜tap™ of wash basin. Say for hand wash first one pushes (presses) the tap by ˜foot™ water flow starts then when one releases foot from the tap water flow stops. Now one can take the soap and at the end again when he/she presses the specially designed ˜tap™ the water will flow. So water will flow only when the ˜tap™ is pressed. And water will not flow when the ˜tap™ is in released condition. This is a very good water saving technique that can be used in our daily life.

No. of Pages : 13 No. of Claims : 3

(12) PATENT APPLICATION PUBLICATION
(19) INDIA
(22) Date of filing of Application :13/08/2014
(21) Application No.1638/MUMNP/2014 A
(43) Publication Date : 22/05/2015

(54) Title of the invention : STORAGE CONTAINER

(51) International classification :B65D43/02,B65D45/20,B65D53/02
(31) Priority Document No :1020120006675
(32) Priority Date :20/01/2012
(33) Name of priority country :Republic of Korea
(86) International Application No :PCT/KR2013/000439
Filing Date :18/01/2013
(87) International Publication No :WO 2013/109103
(61) Patent of Addition to Application Number :NA
Filing Date :NA
(62) Divisional to Application Number :NA
Filing Date :NA

(71)**Name of Applicant :**
1)THREEWAYTECHNOLOGY CO. LTD.
Address of Applicant :100111 Gukhoe daero 68 gil Yeongdeungpo gu Seoul 150 871 Republic of Korea
(72)**Name of Inventor :**
1)KOO Hong Sik

(57) Abstract :
A storage container is disclosed. The storage container according to one aspect of the present invention comprises a cover and a container body wherein one rotational member is rotationally coupled with the cover and the rotational member is coupled with the container body by enabling the cover to move in a lower direction of one side thereof when the rotational member is coupled with the container body.

No. of Pages : 43 No. of Claims : 10

(12) PATENT APPLICATION PUBLICATION
(19) INDIA
(22) Date of filing of Application :13/08/2014
(21) Application No.1639/MUMNP/2014 A
(43) Publication Date : 22/05/2015

(54) Title of the invention : LINEAR BEARING AND SOLENOID COMPRISING SUCH A LINEAR BEARING

(51) International classification :F16F1/10,F16F3/02
(31) Priority Document No :12151564.7
(32) Priority Date :18/01/2012
(33) Name of priority country :EPO
(86) International Application No :PCT/EP2013/050916
Filing Date :18/01/2013
(87) International Publication No :WO 2013/107852
(61) Patent of Addition to Application Number :NA
Filing Date :NA
(62) Divisional to Application Number :NA
Filing Date :NA

(71)**Name of Applicant :**
1)BURCKHARDT COMPRESSION AG
Address of Applicant :Im Link 5 CH 8404 Winterthur Switzerland
(72)**Name of Inventor :**
1)AIGNER Roland

(57) Abstract :
The linear bearing (3) comprises a plurality of concentrically arranged springs (2) each spring (2) being designed as a plate spring with a fixing part (2a) and a bore (2c) arranged in the center (Z). Each spring (2) also has a spring arm (2b) which emerges from the fixing part (2a) and ends in an end section (2g). The end section (2g) has the bore (2c) and the bore (2c) is concentric to the fixing part (2a). Each spring (2) has a direction of movement (B) which runs perpendicular to the fixing part (2a) and the springs (2) are arranged one behind the other in the direction of movement (B). The spring arm (2b) has a spring arm section (2ba) which runs concentrically with the bore (2c) and which extends along an angular range () between 100° and 270° preferably along an angular range () between 180° and 300°. The fixing part (2a) is at least partly annular and the spring arm section (2ba) has in a radial direction with respect to the bore (2c) a width (2k) which is at least five times greater than the thickness (2i) of the spring arm (2b). The width (2k) of the spring arm section (2ba) is designed such that the spring arm section extends relative to the annular fixing part (2a) and the end portion (2g) while forming a lateral gap (2d).

No. of Pages : 21 No. of Claims : 14

(12) PATENT APPLICATION PUBLICATION
(19) INDIA
(22) Date of filing of Application :20/03/2013
(21) Application No.875/MUM/2013 A
(43) Publication Date : 22/05/2015

(54) Title of the invention : MOUNTING STRUCTURE FOR SUSPENSION BUSHES IN A RIGID AXLE SUSPENSION SYSTEM

(51) International classification	:F16F1/38, F16F1/371
(31) Priority Document No	:NA
(32) Priority Date	:NA
(33) Name of priority country	:NA
(86) International Application No	:NA
Filing Date	:NA
(87) International Publication No	: NA
(61) Patent of Addition to Application Number	:858/MUM/2010
Filed on	:26/03/2010
(62) Divisional to Application Number	:NA
Filing Date	:NA

(71)**Name of Applicant :**
1)TATA MOTORS LIMITED
Address of Applicant :BOMBAY HOUSE, 24 HOMI MODY STREET, HUTATMA CHOWK, MUMBAI 400 001, INDIA Maharashtra India
(72)**Name of Inventor :**
1)MR. MANDAR HAJARE
2)MR. SOHEB AHMED

(57) Abstract :
The mounting structure for suspension bushes in a rigid axle suspension system is provided to bare the multi direction twisting forces exerted at the suspension during vehicle driving. The mounting structure comprises a bottom plate for supporting a rigid axle of said suspension system. A support plate is connected below said bottom plate for mounting with said suspension bushes on a trailing link assembly. An axle mounting plate is provided for connecting with one end of said rigid axle. A spring seat is connected above said bottom plate towards one end and other end connected to the rigid axle to form a box like structure. A pandhard rod bracket is connected to the rigid axle for mounting with an external link and a damper sleeve is provided at both ends of the rigid axle for mounting with a shock absorber. FIG. 1 is selected 8 Claims & 4 drawing sheets

No. of Pages : 17 No. of Claims : 10

(12) PATENT APPLICATION PUBLICATION
(19) INDIA
(22) Date of filing of Application :20/03/2013
(21) Application No.918/MUM/2013 A
(43) Publication Date : 22/05/2015

(54) Title of the invention : ENDLESS HOT WATER WITHOUT ELECTRICITY

(51) International classification :F24H1/10
(31) Priority Document No :NA
(32) Priority Date :NA
(33) Name of priority country :NA
(86) International Application No :NA
Filing Date :NA
(87) International Publication No : NA
(61) Patent of Addition to Application Number :NA
Filing Date :NA
(62) Divisional to Application Number :NA
Filing Date :NA

(71)**Name of Applicant :**
1)Bhavsar Swapnil Chandrakant
Address of Applicant :M-64/768, Chitrakut Apartment Sola Road, Naranpura Ahmedabad-380063 Gujarat, India.
2)Jain Anjil Anvin
3)Shah Parin Kamalkumar
4)Dr. Vasani Rupesh Parmanand
(72)**Name of Inventor :**
1)Dr. Vasani Rupesh Parmanand
2)Shah Parin Kamalkumar
3)Jain Anjil Anvin
4)Bhavsar Swapnil Chandrakant
5)Patel Bhupendra Laljibhai

(57) Abstract :
The present invention a specially design furnaces is used which is having the hollow copper pipe, wood is heated in the furnace and the water is allow to pass through the copper pipe , so conventional energy is converted into heat energy to get the hot water.

No. of Pages : 10 No. of Claims : 3

(12) PATENT APPLICATION PUBLICATION
(19) INDIA
(22) Date of filing of Application :26/03/2013
(21) Application No.1163/MUM/2013 A
(43) Publication Date : 22/05/2015

(54) Title of the invention : REMOTE USER AUTHENTICATION

(51) International classification :H04L9/32
(31) Priority Document No :NA
(32) Priority Date :NA
(33) Name of priority country :NA
(86) International Application No :NA
Filing Date :NA
(87) International Publication No : NA
(61) Patent of Addition to Application Number :NA
Filing Date :NA
(62) Divisional to Application Number :NA
Filing Date :NA

(71)**Name of Applicant :**
1)TATA CONSULTANCY SERVICES LIMITED
Address of Applicant :Nirmal Building, 9th Floor, Nariman Point, Mumbai, Maharashtra 400021 Maharashtra India
(72)**Name of Inventor :**
1)LOKAMATHE, Mr. Shivraj Vijayshankar
2)PURUSHOTHAMAN, Mr. Balamuralidhar
3)ALASINGARA BHATTACHAR, Mr. Rajan Mindigal
4)RAVISHANKARA SHASTRY, Mr. Addagadde Subramanya

(57) Abstract :
Methods and Devices for remote user authentication through a short distance wireless communication. In one embodiment, the method comprises receiving instructions from a user at a hand-held device (110) to communicatively pair the hand-held device (110) to a computing device (104). The pairing is performed over a short distance wireless communication link (136). Further, based on the received instructions, a online account is identified from a plurality of online accounts stored in the hand-held device (110). Then, login information associated with the identified online account are retrieved from the hand-held device (110). The retrieved login information is then transmitted from the hand-held device (110) to the computing device (104), for remotely authenticating the user.

No. of Pages : 30 No. of Claims : 15

(12) PATENT APPLICATION PUBLICATION
(19) INDIA
(22) Date of filing of Application :21/04/2014
(21) Application No.745/MUMNP/2014 A
(43) Publication Date : 22/05/2015

(54) Title of the invention : POWDER DISPENSER

(51) International classification :B65D83/06
(31) Priority Document No :NA
(32) Priority Date :NA
(33) Name of priority country :NA
(86) International Application No :PCT/IB2012/002080
Filing Date :30/08/2012
(87) International Publication No :WO 2014/033495
(61) Patent of Addition to Application Number :NA
Filing Date :NA
(62) Divisional to Application Number :NA
Filing Date :NA

(71)**Name of Applicant :**
1)ZHEJIANG JM INDUSTRY CO. LTD
Address of Applicant :No. 3 Zhushan Road Mazhu Town Yuyao Zhejiang China
(72)**Name of Inventor :**
1)TU Xufeng

(57) Abstract :
A pump dispenser is arranged for dispensing solidous material under a manually developed pressure with the dispenser being capable of pumping and mechanically agitating the solidous material in a storage container. The resultant dispensed solidous fluid is provided with more consistent suspended solid concentrations with greater solid particle distribution homogeneity.

No. of Pages : 35 No. of Claims : 15

(12) PATENT APPLICATION PUBLICATION
(19) INDIA
(22) Date of filing of Application :03/05/2014
(21) Application No.836/MUMNP/2014 A
(43) Publication Date : 22/05/2015

(54) Title of the invention : DIESEL OXIDATION CATALYST AND METHOD OF TREATING ENGINE EXHAUST GAS

(51) International classification :B01D53/94
(31) Priority Document No :NA
(32) Priority Date :NA
(33) Name of priority country :NA
(86) International Application No :PCT/US2011/055007
Filing Date :06/10/2011
(87) International Publication No :WO 2013/052048
(61) Patent of Addition to Application Number :NA
Filing Date :NA
(62) Divisional to Application Number :NA
Filing Date :NA

(71)**Name of Applicant :**
1)MACK TRUCKS INC.
Address of Applicant :7900 National Services Road Greensboro NC 27409 U.S.A
(72)**Name of Inventor :**
1)GIBBLE John C.
2)TAI Chun
3)HUBER Jeffrey A.

(57) Abstract :
A diesel oxidation catalyst includes an inlet side an outlet side and at least one channel extending from the inlet side to the outlet side the channel including a first non catalyzed portion extending from the inlet side to a second catalyzed portion. A method of treating engine exhaust gas is also provided.

No. of Pages : 15 No. of Claims : 20

(12) PATENT APPLICATION PUBLICATION
(19) INDIA
(22) Date of filing of Application :20/03/2013
(21) Application No.919/MUM/2013 A
(43) Publication Date : 22/05/2015

(54) Title of the invention : A URINE POWER BATTERY

(51) International classification :A61F5/455
(31) Priority Document No :NA
(32) Priority Date :NA
(33) Name of priority country :NA
(86) International Application No :NA
Filing Date :NA
(87) International Publication No : NA
(61) Patent of Addition to Application Number :NA
Filing Date :NA
(62) Divisional to Application Number :NA
Filing Date :NA

(71)**Name of Applicant :**
1)Bhavsar Swapnil Chandrakant
Address of Applicant :M-64/768, Chitrakut Apartment Sola Road, Naranpura Ahmedabad-380063 Gujarat, India.
2)Shah Parin Kamalkumar
3)Dr. Vasani Rupesh Parmanand
4)Jain Anjil Anvin
(72)**Name of Inventor :**
1)Bhavsar Swapnil Chandrakant
2)Shah Parin Kamalkumar
3)Dr. Vasani Rupesh Parmanand
4)Jain Anjil Anvin
5)Patel Bhupendra Laljibhai

(57) Abstract :
The present invention a urine is used as a electrolyte through a specially design cell the urine power battery gives chemical energy and electrodes converts mechanical energy to electrical energy and the electrical energy store into battery and the battery is attached to run device, and the battery gives electrical energy to run small device.

No. of Pages : 10 No. of Claims : 3

(12) PATENT APPLICATION PUBLICATION
(19) INDIA
(22) Date of filing of Application :19/04/2014
(21) Application No.740/MUMNP/2014 A
(43) Publication Date : 22/05/2015

(54) Title of the invention : RECOMBINANT HUMAN NAGLU PROTEIN AND USES THEREOF

(51) International classification :C12N9/26,C12N5/07,A61K38/47
(31) Priority Document No :61/546248
(32) Priority Date :12/10/2011
(33) Name of priority country :U.S.A.
(86) International Application No :PCT/US2012/059708
Filing Date :11/10/2012
(87) International Publication No :WO 2013/055888
(61) Patent of Addition to Application Number :NA
Filing Date :NA
(62) Divisional to Application Number :NA
Filing Date :NA

(71)**Name of Applicant :**
1)SYNAGEVA BIOPHARMA CORP.
Address of Applicant :128 Spring Street Suite 520 Lexington MA 02421 U.S.A.
(72)**Name of Inventor :**
1)QUINN Anthony
2)LEAVITT Markley C.
3)ZHINAN Xia
4)RUTKOWSKI Joseph Victor

(57) Abstract :
The present invention provides compositions comprising an isolated mixture of recombinant human NaGlu proteins in which a substantial amount of the NaGlu proteins in the mixture has increased levels of phosphorylated mannose that confer the proteins to be efficiently internalized into human cells. The present invention also provides methods of producing such mixture of NaGlu proteins vectors used in transgenesis and expression host cells harboring such vectors and methods of isolating and purifying the mixture of NaGlu proteins. The invention further provides methods of treating NaGlu associated diseases.

No. of Pages : 130 No. of Claims : 88

(12) PATENT APPLICATION PUBLICATION
(19) INDIA
(22) Date of filing of Application :20/03/2013
(21) Application No.877/MUM/2013 A
(43) Publication Date : 22/05/2015

(54) Title of the invention : TWO WAY TOOTHPASTE

(51) International classification :A61K8/00
(31) Priority Document No :NA
(32) Priority Date :NA
(33) Name of priority country :NA
(86) International Application No :NA
Filing Date :NA
(87) International Publication No : NA
(61) Patent of Addition to Application Number :NA
Filing Date :NA
(62) Divisional to Application Number :NA
Filing Date :NA

(71)**Name of Applicant :**
1)Bhavsar Swapnil Chandrakant
Address of Applicant :M-64/768, Chitrakut Apartment Sola Road, Naranpura Ahmedabad-380063 Gujarat India
2)Jain Anjil Anvin
3)Shah Parin Kamalkumar
4)Dr. Vasani Rupesh Parmanand
(72)**Name of Inventor :**
1)Dr. Vasani Rupesh Parmanand
2)Shah Parin Kamalkumar
3)Jain Anjil Anvin
4)Bhavsar Swapnil Chandrakant
5)Patel Bhupendra Laljibhai

(57) Abstract :
The present invention of ˜96 Two Way Toothpaste™ is specially designed toothpaste that has two side openings. The toothpaste can be used from both the sides and thus the wastage of some minor content of toothpaste is eliminated. This ˜Two way toothpaste™ is made from three basic materials: aluminum, plastic, and glue.

No. of Pages : 9 No. of Claims : 3

(12) PATENT APPLICATION PUBLICATION
(19) INDIA
(22) Date of filing of Application :20/03/2013
(21) Application No.920/MUM/2013 A
(43) Publication Date : 22/05/2015

(54) Title of the invention : A URINE POWER BATTERY

(51) International classification :A61F5/455,A61F5/44
(31) Priority Document No :NA
(32) Priority Date :NA
(33) Name of priority country :NA
(86) International Application No :NA
Filing Date :NA
(87) International Publication No : NA
(61) Patent of Addition to Application Number :NA
Filing Date :NA
(62) Divisional to Application Number :NA
Filing Date :NA

(71)**Name of Applicant :**
1)Shah Parin Kamalkumar
Address of Applicant :C/11 Gokul Appartment, B/H Manav Kalyan Garden, Uttamnagar, Maninagar, Ahmedabad-380008 Gujarat, India.
2)Dr. Vasani Rupesh Parmanand
3)Jain Anjil Anvin
4)Bhavsar Swapnil Chandrakant
(72)**Name of Inventor :**
1)Dr. Vasani Rupesh Parmanand
2)Shah Parin Kamalkumar
3)Jain Anjil Anvin
4)Bhavsar Swapnil Chandrakant
5)Patel Bhupendra Laljibhai

(57) Abstract :
The present invention a urine is used as a electrolyte through a specially design cell the urine power battery gives chemical energy and electrodes converts mechanical energy to electrical energy and the electrical energy store into battery and the battery is attached to run device, and the battery gives electrical energy to run small device.

No. of Pages : 10 No. of Claims : 3

(12) PATENT APPLICATION PUBLICATION
(19) INDIA
(22) Date of filing of Application :22/05/2014
(21) Application No.971/MUMNP/2014 A
(43) Publication Date : 22/05/2015

(54) Title of the invention : METHOD FOR PRODUCING NEURAMINIC ACID DERIVATIVE

(51) International classification :C07D309/28,C07D309/14,C07D405/06
(31) Priority Document No :2011-275819
(32) Priority Date :16/12/2011
(33) Name of priority country :Japan
(86) International Application No :PCT/JP2012/082294
Filing Date :13/12/2012
(87) International Publication No :WO 2013/089168
(61) Patent of Addition to Application Number :NA
Filing Date :NA
(62) Divisional to Application Number :NA
Filing Date :NA

(71)**Name of Applicant :**
1)DAIICHI SANKYO COMPANY LIMITED
Address of Applicant :3 5 1Nihonbashi HonchoChuo ku Tokyo 1038426 Japan
(72)**Name of Inventor :**
1)SAKURAI Tomohito
2)NAKAJIMA Takumi
3)WAKAYAMA Masakazu
4)TORIYAMA Fumihiko
5)KUWAHARA Yasuhisa

(57) Abstract :
The present invention provides a method for producing a neuraminic acid derivative. A method for producing a compound represented by formula (I) [wherein R represents a C C alkyl group] or a pharmacologically acceptable salt thereof using N acetylneuraminic acid dihydrate as a starting raw material.

No. of Pages : 42 No. of Claims : 9

(12) PATENT APPLICATION PUBLICATION
(19) INDIA
(22) Date of filing of Application :02/05/2014
(21) Application No.832/MUMNP/2014 A
(43) Publication Date : 22/05/2015

(54) Title of the invention : SUBSTITUTED 1 2 5 OXADIAZOLE COMPOUNDS AND THEIR USE AS HERBICIDES II

(51) International classification :C07D409/12,C07D413/12,C07D417/12
(31) Priority Document No :61/560333
(32) Priority Date :16/11/2011
(33) Name of priority country :U.S.A.
(86) International Application No :PCT/EP2012/072692
Filing Date :15/11/2012
(87) International Publication No :WO 2013/072402
(61) Patent of Addition to Application Number :NA
Filing Date :NA
(62) Divisional to Application Number :NA
Filing Date :NA

(71)**Name of Applicant :**
1)BASF SE
Address of Applicant :67056 Ludwigshafen Germany
(72)**Name of Inventor :**
1)KRAUS Helmut
2)WITSCHEL Matthias
3)SEITZ Thomas
4)NEWTON Trevor William
5)PARRA RAPADO Liliana
6)APONTE Raphael
7)KREUZ Klaus
8)GROSSMANN Klaus
9)LERCHL Jens
10)EVANS Richard R.

(57) Abstract :
The present invention relates to substituted 1 2 5 oxadiazole compounds of the formula (I) and the N oxides and salts thereof and to compositions comprising the same. The invention also relates to the use of the 1 2 5 oxadiazole compounds or of the compositions comprising such compounds for controlling unwanted vegetation. Furthermore the invention relates to methods of applying such compounds. In formula I the variables have the following meanings: R is e.g. hydrogen cyano nitro halogen C C alkyl C C cycloalkyl C C cycloalkyl C C alkyl C C haloalkyl C C alkenyl C C haloalkenyl C C alkynyl C C haloalkynyl C C alkoxy C C alkyl C C haloalkoxy C C alkyl O R Z S(O) R Z C(=O) R Z C(=O) OR Z C(=O) NRR Z NRR Z phenyl or Z heterocyclyl;CYC is a bi or tricyclic radical of the following formulae Cyc 1 or Cyc 2 where is the point of attachment of the bicyclic radical to the carbonyl group Q Q independently of each other are e.g. a fused 5 6 7 8 9 or 10 membered carbocycle or a fused 5 6 7 8 9 or 10 membered heterocycle; R is e.g. Z cyano halogen nitro C C alkyl C C alkenyl C C alkynyl C C haloalkyl C C alkoxy C C alkoxy C C alkyl Z C C alkoxy C C alkoxy C C alkylthio C C alkyl Z C C alkylthio C C alkylthio C C alkenyloxy C C alkynyloxy C C haloalkoxy C C haloalkoxy C C alkyl Z C C haloalkoxy C C alkoxy Z S(O) R Z phenoxy or Z heterocyclyloxy; R is e.g. hydrogen halogen Z OH Z NO Z cyano C C alkyl C C alkenyl C C alkynyl Z C C cycloalkyl Z C C cycloalkoxy C C haloalkyl Z C C alkoxy Z C C haloalkoxy Z C C alkoxy C C alkoxy Z C C alkylthio C C alkylthio Z C C alkenyloxy Z C C alkynyloxy Z C C haloalkoxy Z C C haloalkenyloxy Z C C haloalkynyloxy Z C C haloalkoxy C C alkoxy Z (tri C C alkyl)silyl Z S(O) R Z C(=O) R Z C(=O) OR Z C(=O) NRR Z NRR Z phenyl or Z heterocyclyl; R is hydrogen halogen cyano nitro C C alkyl or C C haloalkyl; R is hydrogen halogen C C alkyl or C C haloalkyl; provided that at least one of the radicals R and R is different from hydrogen; n is 0 1 or 2; k is 0 1 or 2; and the variables Z Z Z Z Z R R R R R R R R R R R R R R R R R R R and R have the meanings given in the claims.

No. of Pages : 108 No. of Claims : 26

(12) PATENT APPLICATION PUBLICATION
(19) INDIA
(22) Date of filing of Application :20/03/2013
(21) Application No.885/MUM/2013 A
(43) Publication Date : 22/05/2015

(54) Title of the invention : A NOVEL POWER GENERATING SHOE

(51) International classification	:A43D1/02, A43B 3/00
(31) Priority Document No	:NA
(32) Priority Date	:NA
(33) Name of priority country	:NA
(86) International Application No	:NA
Filing Date	:NA
(87) International Publication No	: NA
(61) Patent of Addition to Application Number	:NA
Filing Date	:NA
(62) Divisional to Application Number	:NA
Filing Date	:NA

(71)**Name of Applicant :**
1)Dr. Vasani Rupesh Parmanand
Address of Applicant :07, Aditraj Bunglows, Near Nandanvan-5, B/h Kalatirth Apartment, Prernatirth Derasar Road, Jodhpur, Ahmedabad-380015. Gujarat, India.
2)Shah Parin Kamalkumar
3)Jain Anjil Anvin
4)Bhavsar Swapnil Chandrakant
(72)**Name of Inventor :**
1)Dr. Vasani Rupesh Parmanand
2)Shah Parin Kamalkumar
3)Jain Anjil Anvin
4)Bhavsar Swapnil Chandrakant
5)5. Patel Bhupendra Laljibhai
6)Dr. Akshai K. Aggarwal
7)Aditya Akshai Aggarwal

(57) Abstract :
A Power Generating Shoe is a specially designed shoe containing a piezo based power generation system included in the soul of the shoe. The shoe also contains the battery that is charged by this piezo based power generation system. Here the kinetic energy of human that is wasted in the form of friction is utilized in the form of pressure energy and this pressure energy is utilized to generate the power. This generated power is stored in the battery and from this battery the generated power can be utilized for the further applications.

No. of Pages : 11 No. of Claims : 3

(12) PATENT APPLICATION PUBLICATION
(19) INDIA
(22) Date of filing of Application :22/05/2014
(21) Application No.977/MUMNP/2014 A
(43) Publication Date : 22/05/2015

(54) Title of the invention : ELECTRONIC MONEY TRANSFER PAYMENT METHOD AND SYSTEM FOR SAME

(51) International classification :G06Q20/06,G06Q20/40
(31) Priority Document No :2011-233596
(32) Priority Date :25/10/2011
(33) Name of priority country :Japan
(86) International Application No :PCT/JP2012/076344
Filing Date :11/10/2012
(87) International Publication No :WO 2013/061792
(61) Patent of Addition to Application Number :NA
Filing Date :NA
(62) Divisional to Application Number :NA
Filing Date :NA

(71)**Name of Applicant :**
1)ISI CORPORATION
Address of Applicant :3 2 1 Kojimachi Chiyoda ku Tokyo 1020083 Japan
(72)**Name of Inventor :**
1)SATO Motonori

(57) Abstract :
This electronic money transfer payment system provides an electronic money transfer payment method and a system for the same which allow handling electronic money in a sense that is very similar to cash and which allow avoidance of loss of the electronic money even at a time of loss or theft of a terminal for operating the electronic money. To this end first information of an electronic certificate for terminal (A) of user (A) is sent from terminal (B) of user (B) to an electronic money management server (300) and the information of the electronic certificate for terminal (B) is sent from the terminal (A) to the electronic money management server (300). As a result the terminals to perform the transaction are authenticated. Then requests for the payment/receipt of electronic money are transmitted from terminal (A)/terminal (B) to the electronic money management server (300) and on the basis of the requests the electronic money moves from the account of user (A) to the account of user (B) within the electronic money management server (300).

No. of Pages : 102 No. of Claims : 40

(12) PATENT APPLICATION PUBLICATION
(21) Application No.1549/MUMNP/2014 A
(19) INDIA
(22) Date of filing of Application :31/07/2014
(43) Publication Date : 22/05/2015

(54) Title of the invention : LENS DRIVING DEVICE AND CAMERA

(51) International classification :G03B5/00,G02B7/04,H04N5/225
(31) Priority Document No :201-2029729
(32) Priority Date :14/02/2012
(33) Name of priority country :Japan
(86) International Application No :PCT/JP2013/000822
Filing Date :14/02/2013
(87) International Publication No :WO 2013/121788
(61) Patent of Addition to Application Number :NA
Filing Date :NA
(62) Divisional to Application Number :NA
Filing Date :NA

(71)**Name of Applicant :**
1)MITSUMI ELECTRIC CO. LTD.
Address of Applicant :2 11 2 Tsurumaki Tama shi Tokyo 2068567 Japan
(72)**Name of Inventor :**
1)ARIJI Makoto

(57) Abstract :
A lens driving device includes: a lens holder capable of moving along an optical axis direction; a first coil wound onto the lens holder around the optical axis direction; a plurality of magnets having a magnetized first surface on a S pole or a N pole and a second surface perpendicular to the first surface and the optical axis direction the magnets being disposed in a state in which the first surface opposes a circumferential surface of the first coil; a magnet holder fixed away from the plurality of magnets; a yoke constituting together with the plurality of magnets a magnetic circuit having a magnetic flux that traverses the first coil; a second coil provided opposite the second surface of the magnets; and a base on which the second coil is arranged. An auto focus lens driving part that includes the lens holder the first coil the plurality of magnets the magnet holder and the yoke is held on the base so as to allow relative displacement in a direction perpendicular to the optical axis.

No. of Pages : 100 No. of Claims : 13

(12) PATENT APPLICATION PUBLICATION
(19) INDIA
(22) Date of filing of Application :26/11/2012
(21) Application No.2631/MUMNP/2012 A
(43) Publication Date : 22/05/2015

(54) Title of the invention : DISPOSABLE OSTOMY ASSEMBLIES

(51) International classification :A61F5/445
(31) Priority Document No :61/330,359
(32) Priority Date :02/05/2010
(33) Name of priority country :U.S.A.
(86) International Application No :PCT/IB2011/051938
Filing Date :02/05/2011
(87) International Publication No :WO/2011/138731
(61) Patent of Addition to Application Number :NA
Filing Date :NA
(62) Divisional to Application Number :NA
Filing Date :NA

(71)**Name of Applicant :**
1)Stimatix GI Ltd.
Address of Applicant :17 Thelet Street Misgav Business Park 20174 Doar-Na Misgav Israel.
(72)**Name of Inventor :**
1)HANUKA David
2)OR Meir

(57) Abstract :
Disposable elements for use in ostomy. In one embodiment a cap with an integral bag is provided. In another embodiment a sealable bag is provided with means for sealing. In another embodiment the ostomy port itself is disposable.

No. of Pages : 47 No. of Claims : 41

(12) PATENT APPLICATION PUBLICATION
(19) INDIA
(22) Date of filing of Application :20/03/2013
(21) Application No.899/MUM/2013 A
(43) Publication Date : 22/05/2015

(54) Title of the invention : SELF POWERED MOTOR

(51) International classification :H02K53/00
(31) Priority Document No :NA
(32) Priority Date :NA
(33) Name of priority country :NA
(86) International Application No :NA
Filing Date :NA
(87) International Publication No : NA
(61) Patent of Addition to Application Number :NA
Filing Date :NA
(62) Divisional to Application Number :NA
Filing Date :NA

(71)**Name of Applicant :**
1)Dr. Vasani Rupesh Parmanand
Address of Applicant :07, Aditraj Bunglows, Near Nandanvan-5, B/h Kalatirth Apartment, Prernatirth Derasar Road, Jodhpur, Ahmedabad-380015. Gujarat, India.
2)Shah Parin Kamalkumar
3)Jain Anjil Anvin
4)Bhavsar Swapnil Chandrakant
(72)**Name of Inventor :**
1)Dr. Vasani Rupesh Parmanand
2)Shah Parin Kamalkumar
3)Jain Anjil Anvin
4)Bhavsar Swapnil Chandrakant
5)Patel Bhupendra Laljibhai

(57) Abstract :
The present invention a vehicle running through a self generated power the specially design unit with the front tyre gives mechanical energy and generator converts mechanical energy to electrical energy and the electrical energy store into battery and the battery is attached to controller, and the controller gives electrical energy to the car motor.

No. of Pages : 9 No. of Claims : 3

(12) PATENT APPLICATION PUBLICATION
(19) INDIA
(22) Date of filing of Application :27/05/2014
(21) Application No.1021/MUMNP/2014 A
(43) Publication Date : 22/05/2015

(54) Title of the invention : METHOD FOR REMOVAL OF TOXIC WASTE FROM TIMBER

(51) International classification :C10G1/04,B01D11/04,B27K9/00
(31) Priority Document No :596199
(32) Priority Date :03/11/2011
(33) Name of priority country :New Zealand
(86) International Application No :PCT/NZ2012/000203
Filing Date :05/11/2012
(87) International Publication No :WO 2013/066196
(61) Patent of Addition to Application Number :NA
Filing Date :NA
(62) Divisional to Application Number :NA
Filing Date :NA

(71)**Name of Applicant :**
1)SOLRAY HOLDINGS LIMITED
Address of Applicant :C/ T V Bailey & Assoc. 22 Foster Street Riccarton Christchurch 8011 New Zealand
(72)**Name of Inventor :**
1)BATHURST Christopher Francis

(57) Abstract :
A continuous flow wood processing technology for extracting lignin from woody plant material and converting the delignified cellulosic residue to crude bio oils is provided. Wood is chipped before processing starts and fed into a lignin extractor. The lignin extractor uses ethanol at high temperatures to dissolve the lignin with counter current material contactors and heat exchangers and a computer control system to control the operation. Most of the preservative chemicals are likely to precipitate out at this stage as a heavy sludge which can be removed from the process. The ethanol containing dissolved lignin is removed from the lignin extractor the dissolved lignin recovered the ethanol being recycled into the lignin extractor and the residual heat returned to the process. The delignified cellulosic pulp is removed from the lignin extractor and subjected to a milling operation to convert the pulp into a smooth sludge for entry to a bio convertor by a super critical water process. The residue is prepared as a high phosphate Fertilizer. Also described is a process for the removal of toxic preservative chemicals from waste timber and conversion to useful or nontoxic forms.

No. of Pages : 43 No. of Claims : 34

(12) PATENT APPLICATION PUBLICATION
(19) INDIA
(22) Date of filing of Application :01/08/2014
(21) Application No.1554/MUMNP/2014 A
(43) Publication Date : 22/05/2015

(54) Title of the invention : OPHTHALMIC COMPOSITION

(51) International classification :A61K31/121,A61K9/08,A61K47/04
(31) Priority Document No :2012-040729
(32) Priority Date :27/02/2012
(33) Name of priority country :Japan
(86) International Application No :PCT/JP2013/054782
Filing Date :25/02/2013
(87) International Publication No :WO 2013/129319
(61) Patent of Addition to Application Number :NA
Filing Date :NA
(62) Divisional to Application Number :NA
Filing Date :NA

(71)**Name of Applicant :**
1)ROHTO PHARMACEUTICAL CO. LTD.
Address of Applicant :1 8 1 Tatsumi nishi Ikuno ku Osaka shi Osaka 5448666 Japan
(72)**Name of Inventor :**
1)MIYANOTakayuki
2)KUROSETakahiro

(57) Abstract :
An ophthalmic composition containing a geranylgeranylacetone and a phosphoric acid buffering agent has an extremely small decline in the content of the geranylgeranylacetone when the composition is stored for a long period of time because the adsorption of the geranylgeranylacetone into an ophthalmic container wall is inhibited. Moreover the geranylgeranylacetone in the ophthalmic composition containing the geranylgeranylacetone and the phosphoric acid buffering agent is hardly adsorbed into a contact lens. Additionally the ophthalmic composition containing the geranylgeranylacetone and the phosphoric acid buffering agent is less likely to become cloudy when being stored at low temperatures.

No. of Pages : 47 No. of Claims : 10

(12) PATENT APPLICATION PUBLICATION
(19) INDIA
(22) Date of filing of Application :20/03/2013
(21) Application No.933/MUM/2013 A
(43) Publication Date : 22/05/2015

(54) Title of the invention : ENDLESS HOT WATER WITHOUT ELECTRICITY

(51) International classification :F24H1/10
(31) Priority Document No :NA
(32) Priority Date :NA
(33) Name of priority country :NA
(86) International Application No :NA
Filing Date :NA
(87) International Publication No : NA
(61) Patent of Addition to Application Number :NA
Filing Date :NA
(62) Divisional to Application Number :NA
Filing Date :NA

(71)**Name of Applicant :**
1)Dr. Vasani Rupesh Parmanand
Address of Applicant :07, Aditraj Bunglows, Near Nandanvan-5, B/h Kalatirth Apartment, Prernatirth Derasar Road, Jodhpur, Ahmedabad-380015. Gujarat, India. Maharashtra India
2)Shah Parin Kamalkumar
3)Jain Anjil Anvin
4)Bhavsar Swapnil Chandrakant
(72)**Name of Inventor :**
1)Dr. Vasani Rupesh Parmanand
2)Shah Parin Kamalkumar
3)Jain Anjil Anvin
4)Bhavsar Swapnil Chandrakant
5)Patel Bhupendra Laljibhai

(57) Abstract :
The present invention a specially design furnaces is used which is having the hollow copper pipe, wood is heated in the furnace and the water is allow to pass through the copper pipe , so conventional energy is converted into heat energy to get the hot water.

No. of Pages : 10 No. of Claims : 3

(12) PATENT APPLICATION PUBLICATION
(19) INDIA
(22) Date of filing of Application :23/04/2014
(21) Application No.762/MUMNP/2014 A
(43) Publication Date : 22/05/2015

(54) Title of the invention : CHROMOBACTERIUM FORMULATIONS COMPOSTIONS METABOLITES AND THEIR USES

(51) International classification	:A01N63/02,A01N43/36,A01N33/02
(31) Priority Document No	:61/551403
(32) Priority Date	:25/10/2011
(33) Name of priority country	:U.S.A.
(86) International Application No	:PCT/US2012/061503
Filing Date	:23/10/2012
(87) International Publication No	:WO 2013/062977
(61) Patent of Addition to Application Number	:NA
Filing Date	:NA
(62) Divisional to Application Number	:NA
Filing Date	:NA

(71)**Name of Applicant :**
1)MARRONE BIO INNOVATIONS INC.
Address of Applicant :2121 Second Street Suite 107B Davis CA 95618 U.S.A.
(72)**Name of Inventor :**
1)RATANAKAR ASOLKAR
2)JAMES NAMNATH
3)MARRONE Pamela

(57) Abstract :
Stabilized biological pesticides comprising filtrate supernatant extract or pesticidally active substance derived therefrom with pesticidal activity having improved shelf life due to maintenance of physical uniformity and longer insecticide activity after use due to higher resistance to degradation when exposed to sunlight are disclosed.

No. of Pages : 81 No. of Claims : 23

(12) PATENT APPLICATION PUBLICATION
(19) INDIA
(22) Date of filing of Application :20/03/2013
(21) Application No.893/MUM/2013 A
(43) Publication Date : 22/05/2015

(54) Title of the invention : BLUETOOTH KEYBOARD WITH MOUSE

(51) International classification :G06F13/00
(31) Priority Document No :NA
(32) Priority Date :NA
(33) Name of priority country :NA
(86) International Application No :NA
Filing Date :NA
(87) International Publication No : NA
(61) Patent of Addition to Application Number :NA
Filing Date :NA
(62) Divisional to Application Number :NA
Filing Date :NA

(71)**Name of Applicant :**
1)Bhavsar Swapnil Chandrakant
Address of Applicant :M-64/768, Chitrakut Apartment Sola Road, Naranpura Ahmedabad-380063 Gujarat, India.
2)Jain Anjil Anvin
3)shah parin kamalkumar
4)Dr. Vasani Rupesh Parmanand
(72)**Name of Inventor :**
1)Dr. Vasani Rupesh Parmanand
2)shah parin kamalkumar
3)Jain Anjil Anvin
4)Bhavsar Swapnil Chandrakant
5)Patel Bhupendra Laljibhai
6)Aditya Akshai Aggarwal
7)Dr. Akshai K. Aggarwal

(57) Abstract :
The present invention of ˜Bluetooth Keyboard with Mouse™ is specially designed keyboard that can be connected to the desktop/laptop using a wireless Bluetooth receiver. Once this receiver is installed in desktop/laptop that the desktop/keyboard can be operated using this wireless Bluetooth keyboard from the remote distance. This ˜Bluetooth Keyboard with Mouse™ is powered by a rechargeable battery that can be charged using a power adapter.

No. of Pages : 9 No. of Claims : 3

(12) PATENT APPLICATION PUBLICATION
(19) INDIA
(22) Date of filing of Application :20/03/2013
(21) Application No.937/MUM/2013 A
(43) Publication Date : 22/05/2015

(54) Title of the invention : A SMART STREET LIGHT

(51) International classification :H02J7/35
(31) Priority Document No :NA
(32) Priority Date :NA
(33) Name of priority country :NA
(86) International Application No :NA
Filing Date :NA
(87) International Publication No : NA
(61) Patent of Addition to Application Number :NA
Filing Date :NA
(62) Divisional to Application Number :NA
Filing Date :NA

(71)**Name of Applicant :**
1)Dr. Vasani Rupesh Parmanand
Address of Applicant :07, Aditraj Bunglows, Near Nandanvan-5, B/h Kalatirth Apartment, Prernatirth Derasar Road, Jodhpur, Ahmedabad-380015. Gujarat, India.
2)Shah Parin Kamalkumar
3)Jain Anjil Anvin
4)Bhavsar Swapnil Chandrakant
(72)**Name of Inventor :**
1)Dr. Vasani Rupesh Parmanand
2)Shah Parin Kamalkumar
3)Jain Anjil Anvin
4)Bhavsar Swapnil Chandrakant
5)Patel Bhupendra Laljibhai

(57) Abstract :
The present invention is a smart street light through a smart sensor the smart street light gives efficient energy and smart sensor converts normal street light to smart street light and the smart street light are connected with WIFI master controller. The smart street light will save energy and minimize the road accident.

No. of Pages : 11 No. of Claims : 3

(12) PATENT APPLICATION PUBLICATION
(19) INDIA
(22) Date of filing of Application :20/03/2013
(21) Application No.900/MUM/2013 A
(43) Publication Date : 22/05/2015

(54) Title of the invention : SPECIALLY DESIGN LOW RPM GENERATOR

(51) International classification :F02B63/04
(31) Priority Document No :NA
(32) Priority Date :NA
(33) Name of priority country :NA
(86) International Application No :NA
Filing Date :NA
(87) International Publication No : NA
(61) Patent of Addition to Application Number :NA
Filing Date :NA
(62) Divisional to Application Number :NA
Filing Date :NA

(71)**Name of Applicant :**
1)Dr. Vasani Rupesh Parmanand
Address of Applicant :07, Aditraj Bunglows, Near Nandanvan-5, B/h Kalatirth Apartment, Prernatirth Derasar Road, Jodhpur, Ahmedabad-380015. Gujarat, India.
2)Shah Parin Kamalkumar
3)Jain Anjil Anvin
4)Bhavsar Swapnil Chandrakant
(72)**Name of Inventor :**
1)Dr. Vasani Rupesh Parmanand
2)Patel Bhupendra Laljibhai
3)Shah Parin Kamalkumar
4)Jain Anjil Anvin
5)Bhavsar Swapnil Chandrakant

(57) Abstract :
The present invention a specially design low rpm generator is design which convert the magnetic energy into the electrical energy. The generator can be used in any way as to easily generate the electricity. The stator be at stationary position and the magnetic rotor rotates and generate 3-phase power.

No. of Pages : 10 No. of Claims : 3

(12) PATENT APPLICATION PUBLICATION
(19) INDIA
(22) Date of filing of Application :20/03/2013
(21) Application No.901/MUM/2013 A
(43) Publication Date : 22/05/2015

(54) Title of the invention : AUTOMATIC GUIDED VEHICLE

(51) International classification :G01C22/00
(31) Priority Document No :NA
(32) Priority Date :NA
(33) Name of priority country :NA
(86) International Application No :NA
Filing Date :NA
(87) International Publication No : NA
(61) Patent of Addition to Application Number :NA
Filing Date :NA
(62) Divisional to Application Number :NA
Filing Date :NA

(71)**Name of Applicant :**
1)Dr. Vasani Rupesh Parmanand
Address of Applicant :07, Aditraj Bunglows, Near Nandanvan-5, B/h Kalatirth Apartment, Prernatirth Derasar Road, Jodhpur, Ahmedabad-380015. Gujarat, India.
2)Shah Parin Kamalkumar
3)Jain Anjil Anvin
4)Bhavsar Swapnil Chandrakant
(72)**Name of Inventor :**
1)Dr. Vasani Rupesh Parmanand
2)Shah Parin Kamalkumar
3)Jain Anjil Anvin
4)Bhavsar Swapnil Chandrakant
5)Patel Bhupendra Laljibhai
6)Vasani Manthan Hitesh
7)Ganatra Tirth Mayur

(57) Abstract :
The present invention a vehicle is driven with the help of the smart circuit and the solar power unit can charge the battery of the vehicle, so the solar energy is converted into mechanical energy by imparting the automatic drive of the vehicle.

No. of Pages : 11 No. of Claims : 3

(12) PATENT APPLICATION PUBLICATION
(21) Application No.991/MUM/2013 A
(19) INDIA
(22) Date of filing of Application :22/03/2013
(43) Publication Date : 22/05/2015

(54) Title of the invention : A DEVICE FOR USE IN CIRCUIT BREAKERS

(51) International classification	:H01H9/28	(71)**Name of Applicant :**
(31) Priority Document No	:NA	**1)LARSEN & TOUBRO LIMITED**
(32) Priority Date	:NA	Address of Applicant :L & T HOUSE, BALLARD ESTATE, MUMBAI 400 001, STATE OF MAHARASHTRA, INDIA
(33) Name of priority country	:NA	(72)**Name of Inventor :**
(86) International Application No	:NA	**1)NAGARJUN, KAPU**
Filing Date	:NA	**2)THAKKAR, URVI**
(87) International Publication No	: NA	**3)DHONGADE, DNYANESHWAR**
(61) Patent of Addition to Application Number	:NA	
Filing Date	:NA	
(62) Divisional to Application Number	:NA	
Filing Date	:NA	

(57) Abstract :
The present invention provides an assembly of linkage for circuit breaker. The present invention provides an assembly of linkages that avoids the use of pins by creating a combination of flared protrusions and groves in the mating member thereby creating an instantaneous pivot axis for revolute coupling. The improvement is primarily delivered by the use of flaring in planar members and combining these with groves made in mounting members to provide pivot axes for revolute joints. The invention provides a way to avoid the use of pins in the mechanism assembly. It also makes the assembly simpler.

No. of Pages : 29 No. of Claims : 12

(12) PATENT APPLICATION PUBLICATION
(21) Application No.1000/MUMNP/2014 A
(19) INDIA
(22) Date of filing of Application :23/05/2014
(43) Publication Date : 22/05/2015

(54) Title of the invention : CORE CORONA TYPE MICROGEL EMULSIFIER AND OIL IN WATER EMULSION COMPOSITION

(51) International classification :B01F17/52,A61K8/06,A61K8/81
(31) Priority Document No :2011-281294
(32) Priority Date :22/12/2011
(33) Name of priority country :Japan
(86) International Application No :PCT/JP2012/076781
Filing Date :17/10/2012
(87) International Publication No :WO 2013/094298
(61) Patent of Addition to Application Number :NA
Filing Date :NA
(62) Divisional to Application Number :NA
Filing Date :NA

(71)**Name of Applicant :**
1)SHISEIDO COMPANY LTD.
Address of Applicant :5 5 Ginza 7 chome Chuo ku Tokyo 1040061 Japan
(72)**Name of Inventor :**
1)SUGIYAMA Yuki
2)SATO Tomoko
3)SHOJI Ken

(57) Abstract :
The present invention is a core corona type microgel emulsifier formed from a copolymer obtained by polymerizing a polyethylene oxide macromonomer a hydrophobic monomer and a cross linking monomer under specific conditions. The present invention is also an oil in water emulsion composition characterized in that the core corona type microgel emulsifier is used to emulsify the oil in water emulsion composition. The purpose of the present invention is to provide a novel core corona type microgel emulsifier used for producing an oil in water emulsion composition which exhibits excellent emulsion stability and temporal stability causes little skin irritation or feeling of coarseness is not powdery or sticky when applied is fresh and exerts an aroma sustaining effect. Another purpose of the present invention is to provide an oil in water emulsion composition which is emulsified by means of the aforementioned emulsifier.

No. of Pages : 109 No. of Claims : 4

(12) PATENT APPLICATION PUBLICATION
(19) INDIA
(22) Date of filing of Application :25/03/2013
(21) Application No.1044/MUM/2013 A
(43) Publication Date : 22/05/2015

(54) Title of the invention : ALL IN ONE TOOTHBRUSH

(51) International classification	:A46B11/00, A46B11/02
(31) Priority Document No	:NA
(32) Priority Date	:NA
(33) Name of priority country	:NA
(86) International Application No	:NA
Filing Date	:NA
(87) International Publication No	: NA
(61) Patent of Addition to Application Number	:NA
Filing Date	:NA
(62) Divisional to Application Number	:NA
Filing Date	:NA

(71)**Name of Applicant :**
1)Bhavsar Swapnil Chandrakant
Address of Applicant :M-64/768, Chitrakut Apartment Sola Road, Naranpura Ahmedabad-380063 Gujarat, India.
2)Jain Anjil Anvin
3)Shah Parin Kamalkumar
4)Dr. Vasani Rupesh Parmanand
(72)**Name of Inventor :**
1)Dr. Vasani Rupesh Parmanand
2)Shah Parin Kamalkumar
3)Jain Anjil Anvin
4)Bhavsar Swapnil Chandrakant
5)Patel Bhupendra Laljibhai

(57) Abstract :
The present invention of ˜All in One Tooth Brush™ is a specially designed tooth brush that contains a tooth brush, a small tooth paste chamber and a small water tank. The toothpaste chamber is filled with the toothpaste from a cap given to open the toothpaste chamber and same way the water can also be filled in the water tank by opening the its cap. Thus this tooth brush fulfills all the requirements of tooth brushing.

No. of Pages : 10 No. of Claims : 3

(12) PATENT APPLICATION PUBLICATION
(19) INDIA
(22) Date of filing of Application :20/03/2013
(21) Application No.906/MUM/2013 A
(43) Publication Date : 22/05/2015

(54) Title of the invention : DC DIGITAL WATT METER

(51) International classification :G01R21/01
(31) Priority Document No :NA
(32) Priority Date :NA
(33) Name of priority country :NA
(86) International Application No :NA
Filing Date :NA
(87) International Publication No : NA
(61) Patent of Addition to Application Number :NA
Filing Date :NA
(62) Divisional to Application Number :NA
Filing Date :NA

(71)**Name of Applicant :**
1)Dr. Vasani Rupesh Parmanand
Address of Applicant :07, Aditraj Bunglows, Near Nandanvan-5, B/h Kalatirth Apartment, Prernatirth Derasar Road, Jodhpur, Ahmedabad-380015. Gujarat, India.
2)Shah Parin Kamalkumar
3)Jain Anjil Anvin
4)Bhavsar Swapnil Chandrakant
(72)**Name of Inventor :**
1)Patel Bhupendra Laljibhai
2)Bhavsar Swapnil Chandrakant
3)Jain Anjil Anvin
4)Shah Parin Kamalkumar
5)Dr. Vasani Rupesh Parmanand

(57) Abstract :
The present invention a specially design DC digital watt meter having the input and output point, the DC meter will calculate the different power quantity and require power to run and the digital values are accurate in compare to the analog DC watt meter.

No. of Pages : 7 No. of Claims : 3

(12) PATENT APPLICATION PUBLICATION
(19) INDIA
(22) Date of filing of Application :20/03/2013
(21) Application No.908/MUM/2013 A
(43) Publication Date : 22/05/2015

(54) Title of the invention : INFINITE USB

(51) International classification :G06F13/40
(31) Priority Document No :NA
(32) Priority Date :NA
(33) Name of priority country :NA
(86) International Application No :NA
Filing Date :NA
(87) International Publication No : NA
(61) Patent of Addition to Application Number :NA
Filing Date :NA
(62) Divisional to Application Number :NA
Filing Date :NA

(71)**Name of Applicant :**
1)Dr. Vasani Rupesh Parmanand
Address of Applicant :07, Aditraj Bunglows, Near Nandanvan-5, B/h Kalatirth Apartment, Prernatirth Derasar Road, Jodhpur, Ahmedabad-380015. Gujarat, India.
2)Shah Parin Kamalkumar
3)Jain Anjil Anvin
4)Bhavsar Swapnil Chandrakant
(72)**Name of Inventor :**
1)Dr. Vasani Rupesh Parmanand
2)Shah Parin Kamalkumar
3)Jain Anjil Anvin
4)Bhavsar Swapnil Chandrakant
5)Patel Bhupendra Laljibhai

(57) Abstract :
The present invention of ˜Infinite USB™ is specially designed USB that has another female USB port at the other side of the USB application based male port. A specially designed circuit is used to use that female port along with the current usb application. Using this kind of USB port the usb port is not actually occupied as the another usb port is always open to use. This USB can be made in 2.0 and 3.0 versions.

No. of Pages : 8 No. of Claims : 3

(12) PATENT APPLICATION PUBLICATION
(19) INDIA
(22) Date of filing of Application :20/03/2013
(21) Application No.902/MUM/2013 A
(43) Publication Date : 22/05/2015

(54) Title of the invention : SOLAR CUM SELF POWER CAR

(51) International classification	:H01L31/12, H02J7/00
(31) Priority Document No	:NA
(32) Priority Date	:NA
(33) Name of priority country	:NA
(86) International Application No	:NA
Filing Date	:NA
(87) International Publication No	: NA
(61) Patent of Addition to Application Number	:NA
Filing Date	:NA
(62) Divisional to Application Number	:NA
Filing Date	:NA

(71)**Name of Applicant :**
1)Dr. Vasani Rupesh Parmanand
Address of Applicant :07, Aditraj Bunglows, Near Nandanvan-5, B/H Kalatirth Apartment, Prernatirth Derasar Road, Jodhpur, Ahmedabad-380015, Gujarat, India.
2)Shah Parin Kamalkumar
3)Jain Anjil Anvin
4)Bhavsar Swapnil Chandrakant
(72)**Name of Inventor :**
1)Dr. Vasani Rupesh Parmanand
2)Shah Parin Kamalkumar
3)Jain Anjil Anvin
4)Bhavsar Swapnil Chandrakant
5)Patel Bhupendra Laljibhai
6)Vasani Manthan Hitesh
7)Ganatra Tirth Mayur

(57) Abstract :
The present invention a solar power battery charging unit is prepared which will charge the car battery to drive and the car. The car is also having the attachment such that the front wheel are connected with the generator so when the car will move then also it will charge the battery to run the car.

No. of Pages : 10 No. of Claims : 3

(12) PATENT APPLICATION PUBLICATION
(19) INDIA
(22) Date of filing of Application :25/03/2013
(21) Application No.1036/MUM/2013 A
(43) Publication Date : 22/05/2015

(54) Title of the invention : A WIRELESS TABLET CHARGER

(51) International classification :G06F1/16
(31) Priority Document No :NA
(32) Priority Date :NA
(33) Name of priority country :NA
(86) International Application No :NA
Filing Date :NA
(87) International Publication No : NA
(61) Patent of Addition to Application Number :NA
Filing Date :NA
(62) Divisional to Application Number :NA
Filing Date :NA

(71)**Name of Applicant :**
1)Dr. Vasani Rupesh Parmanand
Address of Applicant :07, Aditraj Bunglows, Near Nandanvan-5, B/h Kalatirth Apartment, Prernatirth Derasar Road, Jodhpur, Ahmedabad-380015. Gujarat, India.
2)Shah Parin Kamalkumar
3)Jain Anjil Anvin
4)Bhavsar Swapnil Chandrakant
(72)**Name of Inventor :**
1)Dr. Vasani Rupesh Parmanand
2)Shah Parin Kamalkumar
3)Jain Anjil Anvin
4)Bhavsar Swapnil Chandrakant
5)Dr. Akshai K. Aggarwal
6)Aditya Akshai Aggarwal

(57) Abstract :
The present invention of ˜Wireless Tablet Charger™ works on the principle of mutual induction between two induction coils. Here the transmitter coil is used along with a receiver coil. The transmitter coil is supplies the power of 4A and 12V. The receiver coil is included in the support device on which the tablet is kept to charge it battery. A battery is also included in the support device to charge its own battery when a tablet is not needed to be charged. From this charged battery of the support device (containing receiver coil) the tablet can be charged later on.

No. of Pages : 11 No. of Claims : 3

(12) PATENT APPLICATION PUBLICATION
(19) INDIA
(22) Date of filing of Application :13/08/2014
(21) Application No.1640/MUMNP/2014 A
(43) Publication Date : 22/05/2015

(54) Title of the invention : AMIDINE SUBSTITUTED BETA LACTAM COMPOUNDS THEIR PREPARATION AND USE AS ANTIBACTERIAL AGENTS

(51) International classification :A61K31/427,C07D417/12,C07D417/14
(31) Priority Document No :12152279.1
(32) Priority Date :24/01/2012
(33) Name of priority country :EPO
(86) International Application No :PCT/EP2013/051217
Filing Date :23/01/2013
(87) International Publication No :WO 2013/110643
(61) Patent of Addition to Application Number :NA
Filing Date :NA
(62) Divisional to Application Number :NA
Filing Date :NA

(71)**Name of Applicant :**
1)AICURIS GMBH & CO. KG
Address of Applicant :Friedrich Ebert Str. 475 42117 Wuppertal Germany
(72)**Name of Inventor :**
1)KLENKE Burkhard
2)WIEGAND Irith
3)SCHIFFER Guido
4)BROETZ OESTERHELT Heike
5)MAITI Samarendra N.
6)KHAN Jehangir
7)REDDY Andhe
8)YANG Zhixiang
9)HENA Mostafa
10)JIA Guofeng
11)LIGONG Ou
12)LIANG Hong
13)YIP Judy
14)GAO Chuanjun
15)TAJAMMUL Sabiha
16)MOHAMMAD Rahim
17)BISWAJEET Ganguli

(57) Abstract :
The present invention relates to novel β-lactam compounds of formula (I) their preparation and use. In particular this invention relates to novel β-lactam compounds which are amidine substituted monobactam derivatives useful as antimicrobial agents and their preparation.

No. of Pages : 294 No. of Claims : 19

(12) PATENT APPLICATION PUBLICATION
(21) Application No.1162/MUM/2013 A
(19) INDIA
(22) Date of filing of Application :26/03/2013
(43) Publication Date : 22/05/2015

(54) Title of the invention : USER SEGMENTATION FOR COST-BASED DEPLOYMENT OF ENTERPRISE INFRASTRUCTURE

(51) International classification :G06F9/50
(31) Priority Document No :NA
(32) Priority Date :NA
(33) Name of priority country :NA
(86) International Application No :NA
Filing Date :NA
(87) International Publication No : NA
(61) Patent of Addition to Application Number :NA
Filing Date :NA
(62) Divisional to Application Number :NA
Filing Date :NA

(71)**Name of Applicant :**
1)TATA CONSULTANCY SERVICES LIMITED
Address of Applicant :Nirmal Building, 9th Floor, Nariman Point, Mumbai, Maharashtra 400021 Maharashtra India
(72)**Name of Inventor :**
1)KUMAR, Mohan Raj Velayudhan
2)JADHAV, Sandip Sadashiv
3)KELKAR, Rahul Ramesh
4)VIN, Harrick Mayank

(57) Abstract :
Described herein, is a method for user segmentation for cost-based deployment of enterprise infrastructure. According to an implementation, for each of the users, a user fingerprint (UFP) score set comprising rating scores that quantify levels of enterprise-level needs of the each user is determined. For each of deployment solutions of the enterprise, a deployment fingerprint (DFP) score set comprising rating scores that quantify levels of capabilities of the each deployment solution enabled to meet enterprise-level needs of the users is determined. The users are grouped into user segments based on the UFP score sets of the users. A definition of each of the user segments is determined. The definition is indicative of a user whose enterprise-level needs define characteristics of the corresponding user segment. A number of user segments is found based on a cost associated with the deployment solutions for the user segments.

No. of Pages : 46 No. of Claims : 17

(12) PATENT APPLICATION PUBLICATION
(19) INDIA
(22) Date of filing of Application :13/08/2014
(21) Application No.1635/MUMNP/2014 A
(43) Publication Date : 22/05/2015

(54) Title of the invention : CROSS FLOW TRAY AND SUPPORT SYSTEM FOR USE IN A MASS TRANSFER COLUMN

(51) International classification :B01D3/26,B01D3/32,B01D3/00
(31) Priority Document No :61/609680
(32) Priority Date :12/03/2012
(33) Name of priority country :U.S.A.
(86) International Application No:PCT/US2013/029901
Filing Date :08/03/2013
(87) International Publication No :WO 2013/138185
(61) Patent of Addition to Application Number :NA
Filing Date :NA
(62) Divisional to Application Number :NA
Filing Date :NA

(71)**Name of Applicant :**
1)KOCH GLITSCH LP
Address of Applicant :4111 E. 37th Street North Wichita Kansas 67220 U.S.A.
(72)**Name of Inventor :**
1)NIEUWOUDT Izak
2)HEADLEY Darran Matthew
3)EWY David R.
4)GAGE Gary W.

(57) Abstract :
Cross flow trays are provided with a support system. The support system interconnects the upper cross flow tray to a downcomer of the lower cross flow tray to provide support for the upper tray. In some aspects the support system may also interconnect the downcomer of the lower cross flow tray to an upper tray of an underlying pair providing additional support for the assembly. Such tray assemblies may facilitate easier installation without impeding the performance of the column.

No. of Pages : 39 No. of Claims : 22

(12) PATENT APPLICATION PUBLICATION
(19) INDIA
(22) Date of filing of Application :20/03/2013
(21) Application No.910/MUM/2013 A
(43) Publication Date : 22/05/2015

(54) Title of the invention : A NOVEL WIND POWER CAR

(51) International classification :F03B17/06
(31) Priority Document No :NA
(32) Priority Date :NA
(33) Name of priority country :NA
(86) International Application No :NA
Filing Date :NA
(87) International Publication No : NA
(61) Patent of Addition to Application Number :NA
Filing Date :NA
(62) Divisional to Application Number :NA
Filing Date :NA

(71)**Name of Applicant :**
1)Shah Parin Kamalkumar
Address of Applicant :C/11 Gokul Appartment, B/H Manav Kalyan Garden, Uttamnagar, Maninagar, Ahmedabad-380008 Gujarat, India.
2)Dr. Vasani Rupesh Parmanand
3)Bhavsar Swapnil Chandrakant
4)Jain Anjil Anvin
(72)**Name of Inventor :**
1)Dr. Vasani Rupesh Parmanand
2)Shah Parin Kamalkumar
3)Jain Anjil Anvin
4)Bhavsar Swapnil Chandrakant
5)Patel Bhupendra Laljibhai

(57) Abstract :
The present invention a wind passing is through a specially design turbine the wind rotate the turbine and gives mechanical energy and generator converts mechanical energy to electrical energy and the electrical energy store into battery and the battery is attached to controller, and the controller gives electrical energy to the battery and the car will run on the battery power.

No. of Pages : 12 No. of Claims : 3

(12) PATENT APPLICATION PUBLICATION
(19) INDIA
(22) Date of filing of Application :21/05/2014
(21) Application No.957/MUMNP/2014 A
(43) Publication Date : 22/05/2015

(54) Title of the invention : LIGHT FOR VEHICLE AND MANUFACTURING METHOD THEREOF

(51) International classification :F21S8/10
(31) Priority Document No :2011-256958
(32) Priority Date :25/11/2011
(33) Name of priority country :Japan
(86) International Application No :PCT/JP2012/079360
Filing Date :13/11/2012
(87) International Publication No :WO 2013/077222
(61) Patent of Addition to Application Number :NA
Filing Date :NA
(62) Divisional to Application Number :NA
Filing Date :NA

(71)**Name of Applicant :**
1)KOITO MANUFACTURING CO. LTD.
Address of Applicant :8 3 Takanawa 4 chome Minato ku Tokyo 1088711 Japan
(72)**Name of Inventor :**
1)ITO Hiroya
2)KOHATA Takahiro
3)IKEDA Toshimasa

(57) Abstract :
Provided is a light for a vehicle comprising a resin component having no uneven creping. A resin component (10) has a design surface (10a) exposed in the front of the light and a non design surface (10b) provided on the back of the design surface (10a). A creping portion (21) composed of tiny irregularities is provided to the design surface (10a) and an uneven creping suppressing protrusion (22) is provided near the outer edge of an area of the non design surface (10b) that corresponds to the creping portion (21) the protrusion (22) being supported on a mold (40) and adapted to suppress surface contraction in the creping portion (21) during molding.

No. of Pages : 28 No. of Claims : 6

(12) PATENT APPLICATION PUBLICATION
(19) INDIA
(22) Date of filing of Application :28/05/2014
(21) Application No.1025/MUMNP/2014 A
(43) Publication Date : 22/05/2015

(54) Title of the invention : MODULAR MANDREL FOR A MOLDING SYSTEM

(51) International classification :B28B 5/00
(31) Priority Document No :61/566830
(32) Priority Date :05/12/2011
(33) Name of priority country :U.S.A.
(86) International Application No :PCT/US2012/067682
Filing Date :04/12/2012
(87) International Publication No :WO 2013/085868
(61) Patent of Addition to Application Number :NA
Filing Date :NA
(62) Divisional to Application Number :NA
Filing Date :NA

(71)**Name of Applicant :**
1)DAYCO IP HOLDINGS LLC
Address of Applicant :2025 W. Sunshine Street Suite L145 Springfield MO 65807 U.S.A.
(72)**Name of Inventor :**
1)FOSTER Randy C.
2)DIEFENDERFER Randall R.
3)KAMSICKAS Michael M.

(57) Abstract :
A mandrel for a molding system includes a support structure formed in a generally closed loop shape. The support structure is formed of a plurality of discrete segments coupled together. The number of discrete segments is increasable or reducible to change the overall geometry of the closed loop shape. The mandrel may be part of a molding system that includes a mandrel surface that closely fits about the outer surface of the mandrel body. The mandrel surface is formed of a plurality of discrete toothed segments that form a generally closed loop shape.

No. of Pages : 27 No. of Claims : 21

(12) PATENT APPLICATION PUBLICATION
(19) INDIA
(22) Date of filing of Application :20/03/2013
(21) Application No.891/MUM/2013 A
(43) Publication Date : 22/05/2015

(54) Title of the invention : CHEAPEST WATER HEATER

(51) International classification :F24H1/10,F24J2/34
(31) Priority Document No :NA
(32) Priority Date :NA
(33) Name of priority country :NA
(86) International Application No :NA
Filing Date :NA
(87) International Publication No : NA
(61) Patent of Addition to Application Number :NA
Filing Date :NA
(62) Divisional to Application Number :NA
Filing Date :NA

(71)**Name of Applicant :**
1)Bhavsar Swapnil Chandrakant
Address of Applicant :M-64/768, Chitrakut Apartment Sola Road, Naranpura Ahmedabad-380063 Gujarat India
2)Jain Anjil Anvin
3)Shah Parin Kamalkumar
4)Dr. Vasani Rupesh Parmanand
(72)**Name of Inventor :**
1)Bhavsar Swapnil Chandrakant
2)Jain Anjil Anvin
3)Shah Parin Kamalkumar
4)Dr. Vasani Rupesh Parmanand
5)Patel Bhupendra Laljibhai

(57) Abstract :
The present invention of ˜Cheapest Vegetable Washer™ is a specially designed solar based water heater. Here the specially designed frame structure is created; a plastic sheet is fixed on this structure. This plastic sheet is filled with water and this water along with a plastic sheet forms a convex lens. This convex lens in a form of water with plastic sheet concentrates the sun rays on a small place. Water in a black box is placed at this place and heated.

No. of Pages : 7 No. of Claims : 3

(12) PATENT APPLICATION PUBLICATION
(19) INDIA
(22) Date of filing of Application :20/03/2013
(21) Application No.892/MUM/2013 A
(43) Publication Date : 22/05/2015

(54) Title of the invention : CHEAPEST VEGETABLE WASHER

(51) International classification :A47J43/24
(31) Priority Document No :NA
(32) Priority Date :NA
(33) Name of priority country :NA
(86) International Application No :NA
Filing Date :NA
(87) International Publication No : NA
(61) Patent of Addition to Application Number :NA
Filing Date :NA
(62) Divisional to Application Number :NA
Filing Date :NA

(71)**Name of Applicant :**
1)Bhavsar Swapnil Chandrakant
Address of Applicant :M-64/768, Chitrakut Apartment Sola Road, Naranpura Ahmedabad-380063. Gujarat India
2)Jain Anjil Anvin
3)Shah Parin Kamalkumar
4)Dr. Vasani Rupesh Parmanand
(72)**Name of Inventor :**
1)Dr. Vasani Rupesh Parmanand
2)Shah Parin Kamalkumar
3)Jain Anjil Anvin
4)Bhavsar Swapnil Chandrakant
5)Patel Bhupendra Laljibhai

(57) Abstract :
The present invention of ˜Cheapest Vegetable Washer™ is a specially designed vegetable washer in a form of a mixer. The vegetable to be washed is filled in the jar of the mixer with water. The blades of the jar are specially designed. When the mixer is switched on the water in the jar is rotated and vortexes are created. This vortex motion of the water washes the vegetables, fruits in the jar. The blades are designed in such a way that the vegetables are not cut due to the blades.

No. of Pages : 8 No. of Claims : 3

(12) PATENT APPLICATION PUBLICATION
(21) Application No.2812/MUMNP/2012 A
(19) INDIA
(22) Date of filing of Application :19/12/2012
(43) Publication Date : 22/05/2015

(54) Title of the invention : METHODS AND COMPOSITIONS FOR DIAGNOSIS AND PROGNOSIS OF RENAL INJURY AND RENAL FAILURE

(51) International classification :G01N33/00
(31) Priority Document No :61/357,966
(32) Priority Date :23/06/2010
(33) Name of priority country :U.S.A.
(86) International Application No :PCT/US2011/001125
Filing Date :23/06/2011
(87) International Publication No :WO/2011/162819
(61) Patent of Addition to Application Number :NA
Filing Date :NA
(62) Divisional to Application Number :NA
Filing Date :NA

(71)**Name of Applicant :**
1)ASTUTE MEDICAL, INC.
Address of Applicant :Blg 2, 645 3550 General Atomics Court San Diego, CA 92121UNITED STATES OF AMERICA
(72)**Name of Inventor :**
1)ANDERBERG, Joseph
2)GRAY, Jeff
3)McPHERSON, Paul
4)NAKAMURA, Kevin
5)KAMPF, James, Patrick

(57) Abstract :
The present invention relates to methods and compositions for monitoring, diagnosis, prognosis, and determination of treatment regimens in subjects suffering from or suspected of having a renal injury. In particular, the invention relates to using a one or more assays configured to detect a kidney injury marker selected from the group consisting of Tumor necrosis factor receptor superfamily member 8, Alpha-Fetoprotein, Thyroxine-binding globulin, Prostate-specific antigen (free form), Apolipoprotein A, Apolipoprotein E, Thyrotropin subunit beta, Platelet-derived growth factor B/B dimer, C-C motif chemokine 7, C-C motif chemokine 26, Complement C4-B, Corticotropin, Interferon alpha-2, Interleukin-4 receptor alpha chain, Insulin-like growth factor-binding protein 4, Insulin-like growth factor-binding protein 5, Interleukin 21, Interleukin 23 alpha subunit, Interleukin-28A, Interleukin-33, Lutropin subunit beta, Matrix Metalloproteinase-1, Neural cell adhesion molecule 1, Pigment epithelium-derived factor, Vascular endothelial growth factor receptor 2, Vascular endothelial growth factor receptor 3, and IgG4 as diagnostic and prognostic biomarkers in renal injuries.

No. of Pages : 482 No. of Claims : 108

(12) PATENT APPLICATION PUBLICATION
(19) INDIA
(22) Date of filing of Application :22/11/2012
(21) Application No.2606/MUMNP/2012 A
(43) Publication Date : 22/05/2015

(54) Title of the invention : TRIAMCINOLONE ACETONIDE FORMULATIONS FOR TREATING DERMATITIS AND PSORIASIS

(51) International classification	:A61K47/34, A61K9/06,
(31) Priority Document No	:61/332,157
(32) Priority Date	:06/05/2010
(33) Name of priority country	:U.S.A.
(86) International Application No	:PCT/US2011/035216
Filing Date	:04/05/2011
(87) International Publication No	:WO/2011/140236
(61) Patent of Addition to Application Number	:NA
Filing Date	:NA
(62) Divisional to Application Number	:NA
Filing Date	:NA

(71)**Name of Applicant :**
1)NUVO RESEARCH INC.
Address of Applicant :7560 Airport Road Unit 10 Mississauga Ontario L4T 4H4 Canada
(72)**Name of Inventor :**
1)ALIYAR Hyder
2)ZHANG Jie

(57) Abstract :
The present invention is drawn to formulations and related methods for treating dermatitis or psoriasis. The formulation can include triamcinolone acetonide a polymer selected from the group of a poly(2-hydroxyalkylacrylate) a poly(2-hydroxyalkylmethacrylate) and combinations thereof. The formulation also includes a volatile solvent system including at least one volatile solvent and a non-volatile solvent system including at least one non-volatile solvent.

No. of Pages : 22 No. of Claims : 38

(12) PATENT APPLICATION PUBLICATION
(19) INDIA
(22) Date of filing of Application :09/11/2009

(21) Application No.1318/KOL/2009 A
(43) Publication Date : 22/05/2015

(54) Title of the invention : SYSTEM AND METHOD FOR COUNTING THE BISCUITS IN PACKING MACHINE ON-LINE.

(51) International classification :B65B23/18
(31) Priority Document No :NA
(32) Priority Date :NA
(33) Name of priority country :NA
(86) International Application No :NA
Filing Date :NA
(87) International Publication No : NA
(61) Patent of Addition to Application Number :NA
Filing Date :NA
(62) Divisional to Application Number :NA
Filing Date :NA

(71)**Name of Applicant :**
1)BRITANNIA INDUSTRIES LTD
Address of Applicant :5/1/A, HUNGERFORD STREET, KOLKATA 700017
(72)**Name of Inventor :**
1)JACOB JOHN
2)ANANTHAKRISHNAN R.

(57) Abstract :
A system for counting plurality of biscuits in a stack wherein said system comprises a combination of online optical sensors to detect biscuits on high speed moving conveyor of packing machine.

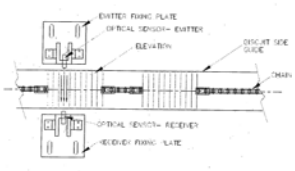

No. of Pages : 11 No. of Claims : 6

(12) PATENT APPLICATION PUBLICATION
(21) Application No.1278/KOLNP/2012 A
(19) INDIA
(22) Date of filing of Application :25/05/2012
(43) Publication Date : 22/05/2015

(54) Title of the invention : ARRANGEMENT FOR AIR CONDITIONING ROOMS AND HEAT PUMP UNIT FOR USE IN THE ARRANGEMENT

(51) International classification :F24F 5/00
(31) Priority Document No :1671/09
(32) Priority Date :30/10/2009
(33) Name of priority country :Switzerland
(86) International Application No :PCT/CH2010/000244
Filing Date :06/10/2010
(87) International Publication No : NA
(61) Patent of Addition to Application Number :NA
Filing Date :NA
(62) Divisional to Application Number :NA
Filing Date :NA

(71)**Name of Applicant :**
1)MENTUS HOLDING AG
Address of Applicant :Gewerbestrasse 11 CH-6330 Cham Switzerland
(72)**Name of Inventor :**
1)PETERHANS Adrian
2)HÖHMANN Lars

(57) Abstract :
The invention relates to an arrangement for air-conditioning rooms. The arrangement comprises a central heating device (1), to which multiple lines (2a, 2b, 3a, 3b, 4a, 4b) containing a heat-exchanging fluid are connected. The arrangement additionally comprises multiple decentralized, electrically operated heat pump units (5, 6, 7, 8), which are energetically connected to the central heating device (1) via the mentioned lines (2a, 2b, 3a, 3b, 4a, 4b). The respective heat pump unit (5) has a plurality of heat pump modules, which absorb thermal energy from the fluid for heating or deliver thermal energy to the fluid for cooling and/or dehumidifying. The mentioned heat pump modules preferably comprise Peltier elements acting as heat pump elements.

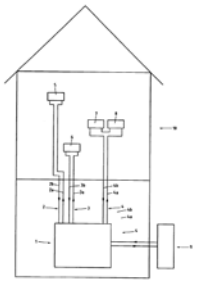

No. of Pages : 21 No. of Claims : 21

(12) PATENT APPLICATION PUBLICATION
(19) INDIA
(22) Date of filing of Application :16/09/2009
(21) Application No.1169/KOL/2009 A
(43) Publication Date : 22/05/2015

(54) Title of the invention : IMPROVED MOULDING UNIT AND PROCESS FOR BISCUITS MANUFACTURING

(51) International classification	:A21C3/00	(71)**Name of Applicant :**
(31) Priority Document No	:NA	**1)BRITANNIA INDUSTRIES LTD.**
(32) Priority Date	:NA	Address of Applicant :5/1/A, HUNGERFORD STREET, KOLKATA 700017
(33) Name of priority country	:NA	
(86) International Application No	:NA	(72)**Name of Inventor :**
Filing Date	:NA	**1)JACOB JOHN**
(87) International Publication No	: NA	**2)MURALIDHARAN S**
(61) Patent of Addition to Application Number	:NA	
Filing Date	:NA	
(62) Divisional to Application Number	:NA	
Filing Date	:NA	

(57) Abstract :
The present invention relates to moulding unit for manufacturing of biscuits and to a process for the manufacture of biscuit involving moulding of the biscuit wherein the dough is present in small amounts into the desired size and shape. The unit consists of the stainless steel hopper (110), which is mounted above the moulding roller (120) and forcing roller (130). The forcing roller (130) is place at a particular angle to fill the dough in to the moulding roller cavities/insert cavities (190) in a uniform pressure, velocity and at uniform density to get an equal quantity of dough filling. The rubber roller (200) is mounted just below the moulding roller (120). Side flanges (140) are adapted to reduce the dough leakage from the dough feeding hopper (110).

No. of Pages : 11 No. of Claims : 8

(12) PATENT APPLICATION PUBLICATION
(19) INDIA
(22) Date of filing of Application :18/11/2013

(21) Application No.1308/KOL/2013 A
(43) Publication Date : 22/05/2015

(54) Title of the invention : AN IMPROVED INTEGRATED NOVEL ANNEALING SIMULATOR DEVICE FOR ANNEALING OF STEEL SPECIMENS UNDER DESIRED ENVIRONMENTAL CONDITIONS FOR TESTING AND CHARACTERIZATION.

(51) International classification	:C21D 9/00
(31) Priority Document No	:NA
(32) Priority Date	:NA
(33) Name of priority country	:NA
(86) International Application No	:NA
Filing Date	:NA
(87) International Publication No	: NA
(61) Patent of Addition to Application Number	:NA
Filing Date	:NA
(62) Divisional to Application Number	:NA
Filing Date	:NA

(71)**Name of Applicant :**
1)TATA STEEL LIMITED
Address of Applicant :RESEARCH AND DEVELOPMENT AND SCIENTIFIC SERVICES DIVISION,JAMSHEDPUR-831001,INDIA
2)COUNCIL OF SCIENTIFIC & INDUSTRIAL RESEARCH
(72)**Name of Inventor :**
1)T VENUGOPALAN
2)MANASHI ADHIKARY
3)NIKHIL RAMAKRISHNAN
4)SUSHIL KUMAR MANDAL
5)BANDARI RAVIKUMAR
6)RAVINDER KUMAR SHARMA
7)NIMAI HALDAR

(57) Abstract :
The invention relates to an improved annealing Simulator device for annealing real sized steel specimen under controlled condition, which comprises a movable muffle Furnace (6) rested on rail tracks of a table top (7) with associated power controls, at least one thermocouple (5) provided on the furnace (6) to monitor and control the temperature of the furnace, an annealing chamber (2) accommodating a plural size of steel specimens (4) on a holder; a thermocouple (3) to monitor inside temperature of the chamber (2); a gas Mixer (10), a flow indicator (11), a cooling arrangement (8, 9) connected at a first end to sources (12, 13) of hydrogen and nitrogen, and to the static annealing chamber (2) at a second end; and an Electrical/instrumentation control Panel (1) for setting the annealing simulation parameters.

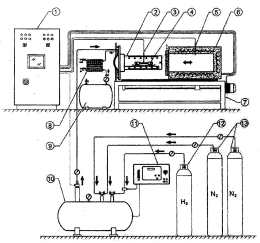

No. of Pages : 31 No. of Claims : 7

AMENDMENT UNDER SEC. 57 (KOLKATA)

(1)

An application for change in the name of the Patentee from FLINT INK CORPORATION to FLINT GROUP INCORPORATED and from FLINT GROUP INCORPORATED to FLINT GROUP US LLC in respect of Patent No. 212748 (IN/PCT/2002/355/KOL) was filed. Any person interested may at any time within three months from the date of this publication give notice on Form-14, if any, to the Controller of Patents, at the appropriate office.

(2)

Applications for change in the name of the Patentee from SAURER GMBH & CO. KG to OERLIKON TEXTILE GMBH CO. KG in respect of Patent Nos. 222228 (2353/KOLNP/2005), 240779 (487/KOLNP/2007) and 239053 (95/KOLNP/2004) were filed. Any person interested may at any time within three months from the date of this publication give notice on Form-14, if any, to the Controller of Patents, at the appropriate office.

PUBLICATION U/R 84(3) IN RESPECT OF APPLICATION FOR RESTORATION OF PATENTS (MUMBAI)

NOTICE IS HEREBY GIVEN THAT ANY PERSON INTERESTED IN OPPOSING THE FOLLOWING APPLICATION FOR RESTORATION OF PATENTS UNDER SECTION 60 OF THE PATENT ACT, 1970, MAY AT ANY TIME WITHIN 2 MONTHS FROM THE DATE OF PUBLICATION OF THIS NOTICE, GIVE NOTICE TO THE CONTROLLER OF PATENTS AT THE APPROPRIATE OFFICE ON THE PRESCRIBED FORM-14 UNDER RULE 85 OF THE PATENTS (AMENDMENT) RULES, 2006.

Sl. No.	PATENT NOS.	APPLICANTS	TITLE	DATE OF CESSATION	APP. OFFICE
1.	213681	Otis Elevator Company	A sheave for an elevator system	19/02/2009	Mumbai
2.	257259	Dorf Ketal Chemicals India Pvt. Ltd.	A naphthenic acid corrosion inhibition composition	19/09/2013	Mumbai

PUBLICATION U/S.60 IN RESPECT OF APPLICATION FOR RESTORATION OF PATENTS (KOLKATA)

Notice is hereby given that application for restoration of under mentioned Patents have been allowed and said Patents are restored.

Sl. No.	Application No.	Patent No.	Applicants	Title	Date of Publication U/R.84(3)	Appropriate Office
1.	2050/KOLNP/2006	254104	GREENHECK FAN CORPORATION	AN EXHAUST ASSEMBLY TO EXHAUST CONTAMINATED AIR FROM A BUILDING	12/12/2014	Kolkata

Publication Under Section 43(2) in Respect of the Grant

Following Patents have been granted and any person interested in opposing these patents under Section 25(2) may at any time within one year from the date of this issue, give notice to the Controller of Patents at the appropriate office, on the prescribed form-7 along with written statement and evidence, if any.

Serial Number	Patent Number	Application Number	Date of Application	Date of Priority	Title of Invention	Name of Patentee	Date of Publication of Abstract u/s 11(A)	Appropriate Office
1	266548	930/DELNP/2004	25/10/2002	30/10/2001	A FLEXIBLE FLUID CONTAINMENT VESSEL AND A METHOD FOR JOINING THE TWO SEGMENTS OF THE VESSEL	ALBANY INTERNATIONAL CORP.	08/08/2008	DELHI
2	266549	3121/DEL/2005	04/11/1996	06/11/1995	A WEAR ASSEMBLY FOR ATTACHMENT ALONG A DIGGING EDGE OF AN EXCAVATOR	ESCO CORPORATION	07/12/2007	DELHI
3	266550	4502/DELNP/2008	08/12/2006	08/12/2005	COMMON-GATE COMMON-SOURCE TRANSCONDUCTANCE STAGE FOR RF DOWNCONVERSION MIXER	QUALCOMM INCORPORATED.	15/08/2008	DELHI
4	266552	5127/DELNP/2006	07/03/2005	07/03/2004	TOOL FOR REPAIRING DAMAGED SCREW THREADS	SHILO TECHNOLOGIES, LTD.	10/08/2007	DELHI
5	266563	2866/DELNP/2008	05/10/2006	07/10/2005	A COMPOSITION COMPRISING LIPOSOMES, A CTL ANTIGEN AND A T HELPER EPITOPE IN A CARRIER	IMMUNOVACCINE TECHNOLOGIES INC.	20/03/2009	DELHI
6	266565	5609/DELNP/2007	23/01/2006	24/01/2005	AN AGGLOMERATE COMPRISING A CYCLOOXYGENASE-2 INHIBITOR, AND PROCESS OF PREPARING THE SAME	VETOQUINOL	17/08/2007	DELHI
7	266570	2410/DEL/2004	01/12/2004	24/12/2003	PROCESS FOR CONTROLLING THE SUPPLY TENSION OF AT LEAST ONE WEFT YARN, DEVICE FOR SUPPLYING WEFT YARN AND WEAVING LOOM EQUIPPED WITH SUCH A DEVICE	STAUBLI LYON	19/02/2010	DELHI
8	266601	5450/DELNP/2008	22/12/2006	23/12/2005	A METHOD OF EVALUATING GENOMIC DNA	PERKINELMER LAS,INC.	24/10/2008	DELHI

Publication Under Section 43(2) in Respect of the Grant

Following Patents have been granted and any person interested in opposing these patents under Section 25(2) may at any time within one year from the date of this issue, give notice to the Controller of Patents at the appropriate office, on the prescribed form-7 along with written statement and evidence, if any.

Serial Number	Patent Number	Application Number	Date of Application	Date of Priority	Title of Invention	Name of Patentee	Date of Publication of Abstract u/s 11(A)	Appropriate Office
1	167295	33/BOM/1988	16/02/1988		BOWL-SHAPED PLASTIC DISH FOR MICROWAVE OVENS	MANOHAR PALSULE DESAI	14/05/1988	MUMBAI
2	266556	1594/MUM/2008	25/07/2008 16:50:37	02/08/2007	LEGACY APPLICATION DECOMMISSIONING FRAMEWORK	ACCENTURE GLOBAL SERVICES LIMITED	12/06/2009	MUMBAI
3	266568	952/MUMNP/2007	28/12/2005	28/12/2004	A STEEL PRODUCT PRODUCED FROM AN AUSTENITIC STEEL	OUTOKUMPU OYJ	20/07/2007	MUMBAI
4	266571	2018/MUMNP/2008	28/03/2007	28/03/2006	METHOD AND APPARATUS FOR DISCONTINUOUS RECEPTION OF CONNECTED TERMINAL IN A MOBILE COMMUNICATION SYSTEM	SAMSUNG ELECTRONICS CO., LTD.	16/01/2009	MUMBAI
5	266576	193/MUM/2008	28/01/2008		COUPLING DEVICE FOR 300 MM PIPE	SANJAY NARHARI RACHALWAR	08/02/2008	MUMBAI
6	266578	2580/MUMNP/2008	22/05/2007	23/05/2006	A METHOD FOR THE PREPARATION OF A FUNCTIONALIZED NANO SIZE CADMIUM OR ZINC OXIDE OR SULFIDE PARTICLE	RUBBER NANO PRODUCTS (PROPRIETARY) LIMITED	23/01/2009	MUMBAI
7	266579	1625/MUM/2011	02/06/2011 11:33:21		DEVELOPMENT OF FAST CURE UNDERWATER EPOXY COATING	INDIAN INSTITUATE OF TECHNOLOGY, BOMBAY	14/12/2012	MUMBAI
8	266582	1039/MUMNP/2010	06/10/2008	23/10/2007	INSTALLATION AND METHOD FOR CLEANING FLUE GASES	BABCOCK NOELL GMBH	17/09/2010	MUMBAI
9	266592	2385/MUMNP/2010	27/04/2009	30/04/2008	WATER - REACTIVE AL COMPOSITE MATERIAL, WATER-REACTIVE AL FILM, PROCESS FOR THE PRODUCTION OF THE AL FILM, AND CONSTITUENT MEMBER FOR FILM- FORMING CHAMBER	ULVAC, INC.	04/03/2011	MUMBAI
10	266613	1560/MUM/2011	24/05/2011		OXIDATIVELY STABLE BIOASSIMILABLE MICROENCAPSULATED IRON COMPOSITION	INDIAN INSTITUTE OF TECHNOLOGY	07/12/2012	MUMBAI

Publication Under Section 43(2) in Respect of the Grant

Following Patents have been granted and any person interested in opposing these patents under Section 25(2) may at any time within one year from the date of this issue, give notice to the Controller of Patents at the appropriate office, on the prescribed form-7 along with written statement and evidence, if any.

Serial Number	Patent Number	Application Number	Date of Application	Date of Priority	Title of Invention	Name of Patentee	Date of Publication of Abstract u/s 11(A)	Appropriate Office
1	266543	281/CHE/2006	21/02/2006 19:25:13	23/02/2005	A DEMODULATOR AND PHASE COMPENSATION METHOD THEREOF	NEC CORPORATION	14/12/2007	CHENNAI
2	266544	5275/CHENP/2008	14/04/2007	14/04/2006	ALLOCATION OF TONES IN A MULTICARRIER COMMUNICATION SYSTEM	QUALCOMM INCORPORATED	20/03/2009	CHENNAI
3	266546	1215/CHENP/2007	06/10/2005	06/10/2005	THIAZOLYL MGLUR5 ANTAGONISTS AND METHODS FOR THEIR USE	MERCK SHARP & DOHME CORP.	31/08/2007	CHENNAI
4	266547	6042/CHENP/2007	29/06/2006	29/06/2005	REDUNDANT AUTOMATION DATA COMMUNICATIONS NETWORK	ABB Oy	13/06/2008	CHENNAI
5	266551	3559/CHENP/2007	30/01/2006	14/02/2005	AN ELECTRONIC REPRODUCTION DEVICE AND A METHOD OF REPRODUCING A HUMAN PERCEPTUAL SIGNAL	KONINKLIJKE PHILIPS ELECTRONICS N.V.	16/11/2007	CHENNAI
6	266555	6660/CHENP/2008	03/05/2007	04/05/2006	A PROCESSING UNIT FOR A DEVICE FOR PROCESSING FOODSTUFFS	SWIZZZPROZZZ AG	27/03/2009	CHENNAI
7	266557	4480/CHENP/2009	25/01/2008	30/01/2007	DEVICE FOR POSITIONING THE THREADS INSIDE THE SECTION WIDTH OF A WARPING SECTION AND WARPING METHOD	BROMAS S.R.L.	11/09/2009	CHENNAI
8	266558	4690/CHENP/2009	26/11/2007	10/01/2007	WINDING DEVICE FOR WINDING STRIPS	SMS SIEMAG AKTIENGESELLSCHAFT	16/10/2009	CHENNAI
9	266560	1235/CHE/2006	14/07/2006 16:42:15	15/07/2005	A PROCESS FOR PRODUCING A HIGH DENSITY JET FUEL FROM A COAL LIQUEFIED OIL	CHINA PETROLEUM & CHEMICAL CORPORATION	15/06/2007	CHENNAI
10	266561	4180/CHENP/2007	23/02/2005	23/02/2005	SINGLE INPUT, MULTIPLE OUTPUT FLOW METER	MICRO MOTION, INC	16/11/2007	CHENNAI

11	266572	984/CHE/2006	07/06/2006	07/06/2005	WHEEL FOR DRIVING A FLEXIBLE HANDRAIL	INVENTIO AG	08/06/2007	CHENNAI
12	266573	4499/CHENP/2007	13/03/2006	11/03/2005	A SYSTEM, DEVICE AND METHOD FOR OBTAINING THREE-DIMENSIONAL SURFACE POINTS OF AN OBJECT IN AN OBJECT COORDINATE SYSTEM	CREAFORM INC.	25/01/2008	CHENNAI
13	266574	3835/CHENP/2007	27/01/2006	02/03/2005	POSTITION DETECTOR AND METHOD FOR DETECTING A POSITITON OF A PACKAGING MATERIAL WITH MAGNETIC MARKING	TETRA LAVAL HOLDINGS & FINANCE SA	23/11/2007	CHENNAI
14	266583	6933/CHENP/2008	11/05/2007	18/05/2006	DELIVERY DEVICE	OERLIKON TEXTILE GMBH & CO. KG	27/03/2009	CHENNAI
15	266584	6700/CHENP/2008	04/06/2007	05/06/2006	HIGH-STRENGTH STEEL SHEET HAVING EXCELLENT ELONGATION, STRETCH FLANGEABILITY AND WELDABILITY	KABUSHIKI KAISHA KOBE SEIKO SHO	27/03/2009	CHENNAI
16	266585	4183/CHENP/2007	17/02/2006	23/02/2005	METHOD FOR WINDING A THREAD TO FORM A CROSS-WOUND BOBBIN AND A CROSS-WOUND BOBBIN	OERLIKON TEXTILE GMBH & CO., KG	16/11/2007	CHENNAI
17	266586	712/CHENP/2009	07/08/2007	09/08/2006	METHOD OF ALIGNING AN AXISYMMETRIC VIBRATING SENSOR INERTIAL NAVIGATION SYSTEM AND CORRESPONDING INERTIAL NAVIGATION SYSTEM	SAGEM DEFENSE SECURITE	29/05/2009	CHENNAI
18	266587	136/CHE/2006	27/01/2006	27/01/2005	METHOD AND SYSTEM FOR MANAGING THE VOLTAGE ON THE DC BUS OF A SPEED CONTROLLER FOR AN AC MOTOR	SCHNEIDER TOSHIBA INVERTER EUROPE SAS	27/07/2007	CHENNAI
19	266589	957/CHENP/2007	05/09/2005	06/09/2004	WATER CRAFT COMPRISING A KITE-TYPE ELEMENT	SKYSAILS GMBH & CO., KG	24/08/2007	CHENNAI
20	266591	5761/CHENP/2008	23/04/2007	24/04/2006	INK JET RECORDING HEAD, INK JET CARTRIDGE, AND METHOD FOR MANUFACTURING INK JET RECORDING HEAD	CANON KABUSHIKI KAISHA	27/03/2009	CHENNAI
21	266594	5104/CHENP/2007	09/05/2006	10/05/2005	A METHOD FOR PRODUCING APPLIANCE CABINETS	WHIRLPOOL CORPORATION	27/06/2008	CHENNAI

22	266595	502/CHENP/2008	29/06/2006	30/06/2005	PROCESSES FOR THE PREPARATION OF 4-AMINO-2-(2,6-DIOXOPIPERIDIN-3-YL)ISOINDOLINE-1, 3-DIONE COMPOUNDS	CELGENE CORPORATION	19/09/2008	CHENNAI
23	266596	430/CHE/2009	26/02/2009 16:52:58	28/03/2008	EVAPORATED FUEL TREATMENT DEVICE FOR MOTORCYCLE	HONDA MOTOR CO., LTD.	02/10/2009	CHENNAI
24	266597	427/CHE/2009	26/02/2009 16:52:57	28/03/2008	EVAPORATED FUEL TREATMENT DEVICE FOR MOTORCYCLE	HONDA MOTOR CO., LTD.	02/10/2009	CHENNAI
25	266598	1666/CHE/2006	13/09/2006 15:20:58	20/09/2005	MULTI-CYLINDER ENGINE	KUBOTA CORPORATION	07/12/2007	CHENNAI
26	266599	5682/CHENP/2007	07/06/2006	09/06/2005	METHOD OF AND SYSTEM FOR DETERMINING DISTANCES BETWEEN LOUDSPEAKERS	KONINKLIJKE PHILIPS ELECTRONICS N.V.	28/03/2008	CHENNAI
27	266602	5510/CHENP/2008	26/04/2007	28/04/2006	A METHOD FOR USB INTERRUPT ENDPOINT SHARING AND A SYSTEM THEREOF	QUALCOMM INCORPORATED	20/03/2009	CHENNAI
28	266604	135/CHE/2006	27/01/2006	27/01/2005	METHOD AND SYSTEM FOR LIMITING THE CURRENT OUTPUT BY A SPEED CONTROLLER OPERATING ACCORDING TO A U/F CONTROL LAW	SCHNEIDER TOSHIBA INVERTER EUROPE SAS	07/09/2007	CHENNAI
29	266605	1496/CHENP/2007	13/09/2005	14/09/2004	A METHOD OF MONITORING THREAD EXECUTION WITHIN A MULTICORE PROCESSOR	FUJITSU SEMICONDUCTOR LIMITED,SYNOPSYS INC	31/08/2007	CHENNAI
30	266606	1219/CHE/2004	18/11/2004	18/11/2003	BATTERY HAVING A NANOSTRUCTURED ELECTRODE SURFACE	LUCENT TECHNOLOGIES INC	04/03/2005	CHENNAI
31	266607	1416/CHENP/2009	30/08/2007	31/08/2006	METHOD OF IDENTIFICATION OF CAUSE OF OCCURRENCE OF SPRINGBACK, POSITION OF MEASURE AGAINST SPRINGBACK AND APPARATUSES OF THESE	NIPPON STEEL & SUMITOMO METAL CORPORATION	26/06/2009	CHENNAI
32	266608	2686/CHE/2007	19/11/2007 16:19:02		A METHOD FOR TRACKING FUNCTIONALITY OF AN EMBEDDED PRODUCT	SAMSUNG R& D INSTITUTE INDIA BANGALORE PRIVATE LIMITED	02/04/2010	CHENNAI
33	266609	2390/CHENP/2007	02/12/2005	03/12/2004	AN OVEN	TURBOCHEF TECHNOLOGIES, INC.	07/09/2007	CHENNAI

34	266610	3683/CHENP/2007	24/01/2006	24/02/2005	A RAMAN DIFFUSION OPTICAL AMPLIFIER	ALCATEL LUCENT	16/11/2007	CHENNAI
35	266611	5503/CHENP/2007	24/05/2006	31/05/2005	METHOD FOR CONTROL OF A DEVICE	KONINKLIJKE PHILIPS ELECTRONICS N.V.	28/03/2008	CHENNAI
36	266614	515/CHE/2005	29/04/2005		A METHOD AND A SYSTEM FOR NOISE ELIMINATION/REDUCTI ON OF INPUT SIGNAL	INDIAN SPACE RESEARCH ORGANISATION	02/05/2008	CHENNAI
37	266615	2357/CHE/2006	19/12/2006		A METHOD OF PRINTING A DIRECTORY STRUCTURE OF A STORAGE DEVICE CONNECTED TO A PRINTING DEVICE	SAMSUNG R& D INSTITUTE INDIA - BANGALORE PRIVATE LIMITED	28/11/2008	CHENNAI

Publication Under Section 43(2) in Respect of the Grant

Following Patents have been granted and any person interested in opposing these patents under Section 25(2) may at any time within one year from the date of this issue, give notice to the Controller of Patents at the appropriate office, on the prescribed form-7 along with written statement and evidence, if any.

Serial Number	Patent Number	Application Number	Date of Application	Date of Priority	Title of Invention	Name of Patentee	Date of Publication of Abstract u/s 11(A)	Appropriate Office
1	266545	4882/KOLNP/2007	29/06/2006	30/06/2005	HCV INHIBITORS	VIROBAY, INC.	09/05/2008	KOLKATA
2	266553	484/KOLNP/2007	07/09/2005	14/09/2004	CUTTING TOOL WITH OXIDIC COATING	WALTER AG	06/07/2007	KOLKATA
3	266554	980/KOLNP/2009	03/05/2007	29/08/2006	METHOD OF MAKING LOW RESISTIVITY DOPED ZINC OXIDE COATINGS AND THE ARTICLES FORMED THEREBY	PILKINGTON GROUP LIMITED,ARKEMA, INC.	22/05/2009	KOLKATA
4	266559	3620/KOLNP/2008	17/05/2007	18/05/2006	COMPOUNDS AS MODULATORS OF THE 5-HT2A SEROTONIN RECEPTOR	ARENA PHARMACEUTICALS, INC	20/02/2009	KOLKATA
5	266562	2064/KOLNP/2009	30/10/2007	31/10/2006	SULFUR OXIDE REMOVING ADDITIVES AND METHODS FOR PARTIAL OXIDATION CONDITIONS	INTERCAT, INC.	26/06/2009	KOLKATA
6	266564	1636/KOLNP/2009	10/10/2007	11/10/2006	PROCESS FOR THE MANUFACTURE OF A CRYSTALLINE PYRAZOLO[1,5-A] PYRIMIDINE COMPOUND	FERRER INTERNACIONAL, S.A.	29/05/2009	KOLKATA
7	266566	3560/KOLNP/2009	17/04/2008	18/04/2007	ELECTRODES WITH MECHANICALLY ROUGHENED SURFACE FOR ELECTROCHEMICAL APPLICATIONS	INDUSTRIE DE NORA S.P.A.	29/01/2010	KOLKATA
8	266567	3060/KOLNP/2007	02/02/2006	08/02/2005	A CATHETER LOCK SOLUTION COMPRISING CITRATE AND A PARABEN	ASH ACCESS TECHNOLOGY, INC.	07/12/2007	KOLKATA
9	266569	1773/KOLNP/2009	19/09/2007	18/10/2006	AN APPARATUS FOR MAKING PEROXYCARBOXYLIC ACID	ECOLAB INC.	12/06/2009	KOLKATA
10	266575	979/KOLNP/2009	03/05/2007	29/08/2006	METHOD OF FORMING A ZINC OXIDE COATED ARTICLE	PILKINGTON GROUP LIMITED,ARKEMA, INC.	22/05/2009	KOLKATA
11	266577	816/KOLNP/2008	02/08/2006	03/08/2005	STIMULATORS OF FACTOR X ACTIVATED (FXA) AS NEW TOPICAL ANTIHEMORRHAGIC AGENTS	THROMBOTARGETS EUROPE, S.L.,	21/11/2008	KOLKATA

12	266580	1519/KOLNP/2007	30/09/2005	01/10/2004	POSITIVE ELECTRODE COMPOSITION COMPRISING A NANOCRYSTALLINE BISMUTH FLUORIDE COMPOUND AND A NANOPARTICULATE CONDUCTIVE MATRIX	RUTGERS, THE STATE UNIVERSITY OF NEW JERSY	27/07/2007	KOLKATA
13	266581	364/KOLNP/2009	23/07/2007	01/08/2006	A METHOD FOR REDUCING AN ALDEHYDE IMPURITY FROM ACETIC ACID STREAM	LYONDELL CHEMICAL TECHNOLOGY, L.P.,MILLENNIUM PETROCHEMICALS INC.	08/05/2009	KOLKATA
14	266588	257/KOLNP/2009	09/08/2007	29/09/2006	METHODS FOR PRODUCING SYNTHESIS GAS	KELLOGG BROWN & ROOT LLC	08/05/2009	KOLKATA
15	266590	1149/KOLNP/2009	04/10/2007	05/10/2006	TWO-LAYER COMPACTED SOLID PRODUCT FOR WATER POTABILIZATION AND PREPARATION METHOD	EUROTAB	22/05/2009	KOLKATA
16	266593	4596/KOLNP/2008	23/05/2007	31/05/2006	A PROCESS FOR THE MANUFACTURING OF SLABS OR BLOCKS OF CONGLOMERATE OF STONE GRANULATE AND POLYESTER RESIN	TONCELLI LUCA	13/03/2009	KOLKATA
17	266600	968/KOLNP/2008	13/02/2006	15/09/2005	BEVERAGE DISPENSER,METHOD FOR CHANGING AMONG FLOW CIRCUITS IN A BEVERAGE DISPENSER,AND METHOD FOR CHANGING FLOW CIRCUIT SELECTION IN A BEVERAGE DISPENSER	LANCER PARTNERSHIP, LTD.	19/12/2008	KOLKATA
18	266603	1108/KOL/2008	25/06/2008	27/07/2007	A CONTROL SYSTEM FOR AN ELECTRIC MACHINE FOR PRODUCING TORQUE LINEARITY FOR FIELD WEAKENING REGION IN AN INTERIOR PERMANENT MAGNET MACHINE	GM GLOBAL TECHNOLOGY OPERATIONS, INC.	24/04/2009	KOLKATA
19	266612	79/KOL/2006	25/01/2006		A HYDROCEPHALUS SHUNT FOR SHUNTING EXCESS CEREBROSPINAL FLUID FROM THE BRAIN TO THE PERITONEAL CAVITY	GHANSHYAM DAS AGRAWAL	03/08/2007	KOLKATA

CONTINUED TO PART-3

CONTINUED FROM PART- 2

INTRODUCTION

In view of the recent amendment made in the Designs (Amendment) Rules, 2008 with effect from 17/06/2008, Publication of the matter relating to Designs is being published in the Official Journal of The Patent Office. This Journal is being published on weekly basis on every Friday covering the various proceedings on Designs as required according to the provisions of under Rule 22, 25, 27 and 39 of the Design (Amendment) Rules, 2008. All the enquiries on this Official Journal and other information as required by the public should be addressed to the Controller General of Patents, Designs & Trade Marks. Suggestions and comments are requested from all quarters so that the content can be enriched.

THE DESIGNS ACT 2000
(SECTION 30)
DESIGN ASSIGNMENT

The Design stands in the name of ALOYS WOBBEN registered under the Designs Act, 2000 has been assigned in the Register of Designs in the name as follows:-

Design No.	Class	Name
214830	**12-06**	WOBBEN PROPERTIES GMBH, A CORPORATION ORGANIZED AND EXISTING UNDER THE LAWS OF GERMANY, OF DREEKAMP 5, 26605 AURICH, GERMANY

THE DESIGNS ACT 2000
(SECTION 30)
DESIGN ASSIGNMENT

The Design stands in the name of ALOYS WOBBEN registered under the Designs Act, 2000 has been assigned in the Register of Designs in the name as follows:-

Design No.	Class	Name
202430	**12-06**	WOBBEN PROPERTIES GMBH, A CORPORATION ORGANIZED AND EXISTING UNDER THE LAWS OF GERMANY, OF DREEKAMP 5, 26605 AURICH, GERMANY

THE DESIGNS ACT 2000
(SECTION 30)
DESIGN ASSIGNMENT

The Design stands in the name of RENAULT TRUCKS registered under the Designs Act, 2000 has been assigned in the Register of Designs in the name as follows:-

Design No.	Class	Name
254286 **254285** **254298** **254295** **254294** **254291** **254296** **254290** **254297** **254293** **254308** **254311** **254310** **254301** **254305** **254306** **254307** **254309** **254329** **254330** **254328** **254304**	**12-16** **254293 (08-06)** **254305(26-06)**	VOLVO LASTVAGNAR AB, A COMPANY ORGANIZED UNDER THE LAWS OF SWEDEN, OF SE-405 08 GOTEBORG, SWEDEN

COPYRIGHT PUBLICATION

SL NO	REGISTERED DESIGN NUMBERS	RENEWED ON
1.	197040	09.04.2015
2.	197041	09.04.2015
3.	197042	09.04.2015
4.	197043	09.04.2015
5.	198259	28.04.2015
6.	198683	10.04.2015
7.	198684	10.04.2015
8.	198685	10.04.2015
9.	198686	10.04.2015
10.	198688	10.04.2015
11.	198689	10.04.2015
12.	198752	07.04.2015
13.	198753	07.04.2015
14.	198754	07.04.2015
15.	198755	07.04.2015

REGISTRATION OF DESIGNS

The following designs have been registered. They are now open for public inspection. In the following each entry the Date of Registration is shown. The Priority Number, Priority Date and Priority Country are also shown

DESIGN NUMBER	265123
CLASS	26-05
1)M/S SHREE SANT KRIPA INTELLECTUAL, HAVING OFFICE AT 7, AKSHAY COMPLEX, OFF. DHOLE PATIL ROAD, PUNE-411001, MAHARASHTRA, INDIA, AN INDIAN	
DATE OF REGISTRATION	26/08/2014
TITLE	CEILING LIGHT FIXTURES
PRIORITY NA	

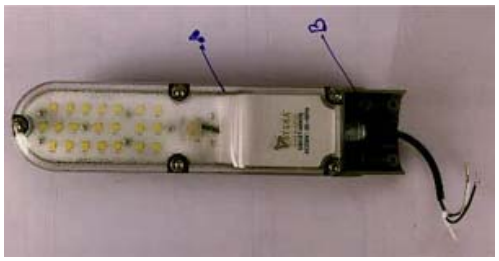

DESIGN NUMBER	265680
CLASS	11-05
1)SEET KAMAL INTERNATIONAL OF 3A, KAMANI ROAD, JHOTWARA INDUSTRIAL AREA, JAIPUR-302013 (RAJASTHAN), INDIA, AN INDIAN PROPRIETORSHIP FIRM WHOSE PROPRIETOR IS GAUTAM NATHANY, INDIAN NATIONAL OF ABOVE ADDRESS	
DATE OF REGISTRATION	15/09/2014
TITLE	FESTIVE DECORATIONS
PRIORITY NA	

DESIGN NUMBER	265740
CLASS	31-00
1)MR. HASMUKH M. JAIN INDIAN NATIONAL, TRADING AS M/S. BHAIRAV PLASTIC CARRYING ON BUSINESS ADDRESS AT 1/8, RAMDAS PADHYE BUILDING, S. K. BOLE ROAD, DADAR-WEST, MUMBAI-400028, MAHARASHTRA, INDIA	
DATE OF REGISTRATION	18/09/2014
TITLE	BASE OF MIXER
PRIORITY NA	

DESIGN NUMBER	266769
CLASS	24-01

1)M/S PNEUMO CARE HEALTH PVT. LTD., WHOSE ADDRESS
F-11, 2ND FLOOR, EAST OF KAILASH NEW DELHI, INDIAN,

DATE OF REGISTRATION	17/10/2014
TITLE	MASK FOR PATIENT AND MEDICAL USE

PRIORITY NA

DESIGN NUMBER	263258
CLASS	24-04

1)RESMED LTD, HAVING AN OFFICE AND PLACE OF BUSINESS AT
1 ELIZABETH MACARTHUR DRIVE, BELLA VISTA, NEW SOUTH WALES, 2153, AUSTRALIA

DATE OF REGISTRATION	11/06/2014
TITLE	AIR DELIVERY TUBE-FRAME ASSEMBLY FOR PATIENT INTERFACE

PRIORITY

PRIORITY NUMBER	DATE	COUNTRY
29/476,296	12/12/2013	U.S.A.

DESIGN NUMBER	258869
CLASS	15-03

1)ISEKI & CO., LTD.
A JAPANESE COMPANY OF THE ADDRESS: 700 UMAKI-CHO, MATSUYAMA-SHI, EHIME-KEN, JAPAN

DATE OF REGISTRATION	19/12/2013
TITLE	COMBINE

PRIORITY

PRIORITY NUMBER	DATE	COUNTRY
2013-022998	01/10/2013	JAPAN

DESIGN NUMBER	258538
CLASS	27-01
1)BRITISH-AMERICAN TOBACCO (HOLDINGS) LIMITED, OF GLOBE HOUSE, 4 TEMPLE PLACE, LONDON WC2R 2PG, UNITED KINGDOM	
DATE OF REGISTRATION	03/12/2013
TITLE	ELECTRONIC CIGARETTE

PRIORITY

PRIORITY NUMBER	DATE	COUNTRY
002249334-0001	04/06/2013	OHIM

DESIGN NUMBER	264899
CLASS	07-02
1)PREETHI KITCHEN APPLIANCES PRIVATE LIMITED, AN INDIAN COMPANY INCORPORATED UNDER THE PROVISIONS OF THE COMPANIES ACT, 1956, OF TECHNOPOLIS KNOWLEDGE PARK, MAHAKALI CAVES ROAD, CHAKALA, ANDHERI-EAST, MUMBAI-400093, INDIA	
DATE OF REGISTRATION	20/08/2014
TITLE	GLASS TOP GAS STOVE
PRIORITY NA	

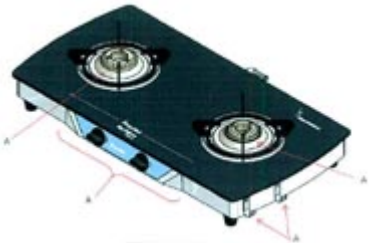

DESIGN NUMBER	263307
CLASS	12-16
1)MITSUBA CORPORATION, A JAPANESE CORPORATION, WHOSE ADDRESS IS 2681, HIROSAWACHO 1-CHOME, KIRYU-SHI, GUNMA 376-85555, JAPAN	
DATE OF REGISTRATION	12/06/2014
TITLE	WIPER FOR VEHICLE

PRIORITY

PRIORITY NUMBER	DATE	COUNTRY
2013-030164	24/12/2013	JAPAN

DESIGN NUMBER	264287
CLASS	28-99

1)THE PROCTER & GAMBLE COMPANY, A BODY CORPORATE INCORPORATED UNDER THE LAWS OF UNITED STATES OF AMERICA, HAVING ITS REGISTERED OFFICE AT
ONE PROCTER & GAMBLE PLAZA, CINCINNATI, OHIO - 45202, UNITED STATES OF AMERICA

DATE OF REGISTRATION	28/07/2014
TITLE	LIQUID DETERGENT DOSE POUCH FOR LAUNDRY UNIT

PRIORITY

PRIORITY NUMBER	DATE	COUNTRY
789659001	30/01/2014	WIPO

DESIGN NUMBER	260918
CLASS	15-09

1)(1) DMG MORI SEIKI CO., LTD, OF 106, KITAKORIYAMA-CHO, YAMATOKORIYAMA-SHI, NARA, 639-1160, JAPAN, A JAPANESE COMPANY AND (2) DMG MORI SEIKI AKTIENGESELLSCHAFT,
OF GILDEMEISTERSTRAßE 60, 33689 BIELEFELD, GERMANY, A GERMAN COMPANY

DATE OF REGISTRATION	11/03/2014
TITLE	CONTROL DESK FOR MACHINE TOOL

PRIORITY

PRIORITY NUMBER	DATE	COUNTRY
002309245-0006	13/09/2013	OHIM

DESIGN NUMBER	266364
CLASS	09-03

1)TRIDENT GROUP LIMITED, A COMPANY INCORPORATED IN
SCO 20-21, SECTOR-9D, MADHYA MARG, CHANDIGARH, INDIA

DATE OF REGISTRATION	30/09/2014
TITLE	PACKAGING

PRIORITY NA

DESIGN NUMBER	264607
CLASS	13-03
1)GOLD MEDAL ELECTRICALS PVT. LTD. A COMPANY REGISTERED UNDER COMPANY ACT 1956 OF, 22/23 SHUBH BUILDING, SAGAR MANTHAN INDUSTRIAL COMPLEX, BHOIDAPADA, VASAI (E), THANE - 401208, MAHARASHTRA, INDIA	
DATE OF REGISTRATION	08/08/2014
TITLE	FUSE
PRIORITY NA	

DESIGN NUMBER	261863
CLASS	28-03
1)THE GILLETTE COMPANY, A COMPANY INCORPORATED UNDER THE LAWS OF UNITED STATES OF AMERICA HAVING ITS OFFICE AT IP/LEGAL PATENT DEPARTMENT - 3E, ONE GILLETTE PARK, BOSTON, MASSACHUSETTS 02127, UNITED STATES OF AMERICA	
DATE OF REGISTRATION	21/04/2014
TITLE	RAZOR COMPONENT

PRIORITY

PRIORITY NUMBER	DATE	COUNTRY
29/472580	13/11/2013	U.S.A.

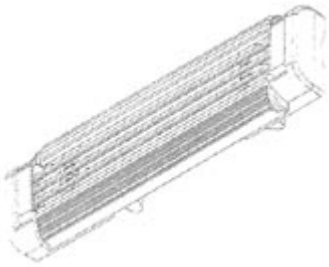

DESIGN NUMBER	253360
CLASS	13-03
1)SCHNEIDER ELECTRIC INDUSTRIES SAS, A FRENCH COMPANY OF 35, RUE JOSEPH MONIER, F-92500 RUEIL-MALMAISON, FRANCE	
DATE OF REGISTRATION	23/04/2013
TITLE	ONE-WAY SWITCH
PRIORITY NA	

DESIGN NUMBER	265759
CLASS	06-04

1)JOYFUL PLASTICS PRIVATE LIMITED, A COMPANY REGISTERED IN INDIA, HAVING ITS REGISTERED OFFICE AT
20, A/F, NEW EMPIRE INDUSTRIAL ESTATE, KONDIVITA ROAD, J.B.NAGAR, ANDHERI(E), MUMBAI-400 059, STATE OF MAHARASHTRA, INDIA, OF ABOVE ADDRESS

DATE OF REGISTRATION	18/09/2014
TITLE	SHELVES

PRIORITY NA

DESIGN NUMBER	264898
CLASS	07-02

1)PREETHI KITCHEN APPLIANCES PRIVATE LIMITED, AN INDIAN COMPANY INCORPORATED UNDER THE PROVISIONS OF THE COMPANIES ACT, 1956, OF
TECHNOPOLIS KNOWLEDGE PARK, MAHAKALI CAVES ROAD, CHAKALA, ANDHERI-EAST, MUMBAI-400093, INDIA

DATE OF REGISTRATION	20/08/2014
TITLE	GLASS TOP GAS STOVE

PRIORITY NA

DESIGN NUMBER	264286
CLASS	28-99

1)THE PROCTER & GAMBLE COMPANY, A BODY CORPORATE INCORPORATED UNDER THE LAWS OF UNITED STATES OF AMERICA, HAVING ITS REGISTERED OFFICE AT
ONE PROCTER & GAMBLE PLAZA, CINCINNATI, OHIO - 45202, UNITED STATES OF AMERICA

DATE OF REGISTRATION	28/07/2014
TITLE	LIQUID DETERGENT DOSE POUCH FOR LAUNDRY UNIT

PRIORITY

PRIORITY NUMBER	DATE	COUNTRY
789659001	30/01/2014	WIPO

DESIGN NUMBER	260917
CLASS	15-09

1)(1) DMG MORI SEIKI CO., LTD, OF 106, KITAKORIYAMA-CHO, YAMATOKORIYAMA-SHI, NARA, 639-1160, JAPAN, A JAPANESE COMPANY AND (2) DMG MORI SEIKI AKTIENGESELLSCHAFT,
OF GILDEMEISTERSTRAßE 60, 33689 BIELEFELD, GERMANY, A GERMAN COMPANY

DATE OF REGISTRATION	11/03/2014
TITLE	TURNING MACHINE

PRIORITY

PRIORITY NUMBER	DATE	COUNTRY
002309245-0001	13/09/2013	OHIM

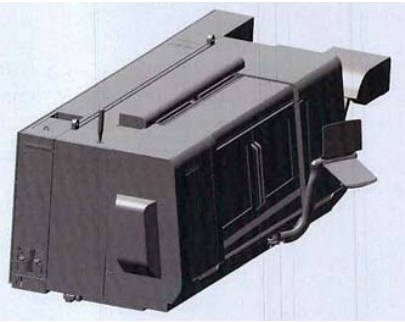

DESIGN NUMBER	266349
CLASS	15-99

1)FAST & FLUID MANAGEMENT B.V., A COMPANY ORGANIZED AND EXISTING UNDER THE LAWS OF THE NETHERLANDS, HAVING ITS OFFICE AT
HUB VAN DOORNEWEG 31, 2171 KZ SASSENHEIM THE NETHERLANDS

DATE OF REGISTRATION	30/09/2014
TITLE	MACHINE USED FOR MIXING PAINTS

PRIORITY

PRIORITY NUMBER	DATE	COUNTRY
002437525-0001	01/04/2014	OHIM

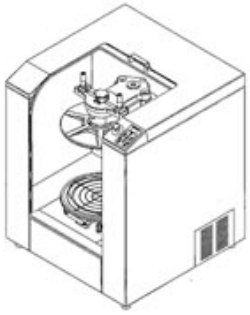

DESIGN NUMBER	264694
CLASS	09-03

1)STC INDIA PRIVATE LIMITED, A COMPANY INCORPORATED UNDER THE COMPANIES ACT, 1956 AND HAVING OFFICE AT
A-505, 5TH FLOOR, WESTERN EDGE II, WESTERN EXPRESS HIGHWAY, BORIVALI (E), MUMBAI-66

DATE OF REGISTRATION	12/08/2014
TITLE	CONTAINER

PRIORITY NA

DESIGN NUMBER	265392
CLASS	11-02
1)AMAR SINGH YADAV, TRADING AS M/S. S. N. GLASS DECORATERS, SITUATED AT 2/778, SUHAG NAGAR, FIROZABAD (U.P.) INDIA, OF ABOVE ADDRESS	
DATE OF REGISTRATION	04/09/2014
TITLE	FLOWER VASE
PRIORITY NA	

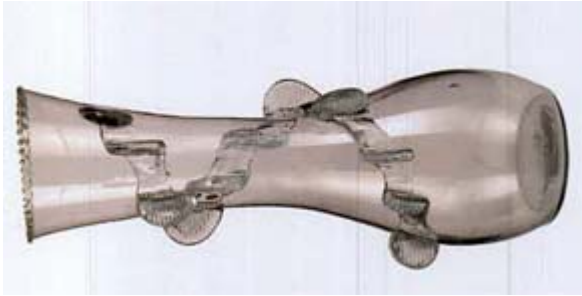

DESIGN NUMBER	266931
CLASS	06-01
1)THE SUPREME INDUSTRIES LTD., (AN INDIAN PUBLIC LIMITED COMPANY), 601 CENTRAL PLAZA, 2/6, SARAT BOSE ROAD, KOLKATA - 700020, WEST BENGAL, INDIA	
DATE OF REGISTRATION	28/10/2014
TITLE	CHAIR
PRIORITY NA	

DESIGN NUMBER	265950
CLASS	12-16
1)MR. ANIL MANOHAR VASUDEO IS AN INDIVIDUAL WHOSE ADDRESS HO. NO.: 3910, SHRIKRUSHNA NAGAR, TARDAL, ICHALKARANJI-416115, TAL-HATKANAGLE, DIST-KOLHAPUR, MAHARASHTRA, INDIA	
DATE OF REGISTRATION	24/09/2014
TITLE	THERMAL ACTIVATOR DEVICE FOR VEHICLES
PRIORITY NA	

DESIGN NUMBER	265603
CLASS	23-02
1)OKBABY S.R.L., VIA DEL LAVORO, 26, 24060 TELGATE (BERGAMO), ITALY, AN ITALIAN LIMITED LIABILITY COMPANY	
DATE OF REGISTRATION	10/09/2014
TITLE	BATH TUB FOR BABIES
PRIORITY	

PRIORITY NUMBER	DATE	COUNTRY
002478057-0001	06/06/2014	OHIM

DESIGN NUMBER	264355
CLASS	13-03
1)PHOENIX CONTACT GMBH & CO. KG; A GERMAN COMPANY, OF BRUNO MUTH; FLACHSMARKTSTR. 8, D-32825 BLOMBERG, GERMANY	
DATE OF REGISTRATION	30/07/2014
TITLE	ELECTRICAL CONNECTOR
PRIORITY	

PRIORITY NUMBER	DATE	COUNTRY
40 2014 100 100.6	06/02/2014	GERMANY

DESIGN NUMBER	263770
CLASS	10-04
1)MR. MAHESH DESHMUKH, INDIAN NATIONAL ON BEHALF OF CHETAS CONTROL SYSTEMS PVT. LTD., A FIRM HAVING ITS PRINCIPAL PLACE OF BUSINESS ADDRESS AT CHETAS HOUSE, PLOT NO. 1, SURVEY NO. 8+9, SIDDHATEK SOCIETY, NEAR PASHAN LAKE, SUTARWADI, PASHAN, PUNE-411021	
DATE OF REGISTRATION	01/07/2014
TITLE	WATER METER FOR WATER FLOW MEASUREMENT
PRIORITY NA	

DESIGN NUMBER	261809
CLASS	14-99

1)SUMAN K. MULUMUDI, 16802 57TH AVENUE, S.E., SNOHOMISH, WA 98296, UNITED STATES OF AMERICA, A CITIZEN OF UNITED STATES OF AMERICA AND MAHESH S. MULUMUDI,
16802 57TH AVENUE, S.E., SNOHOMISH, WA 98296, UNITED STATES OF AMERICA, A CITIZEN OF UNITED STATES OF AMERICA

DATE OF REGISTRATION	16/04/2014
TITLE	ELECTRONIC DEVICE CASING

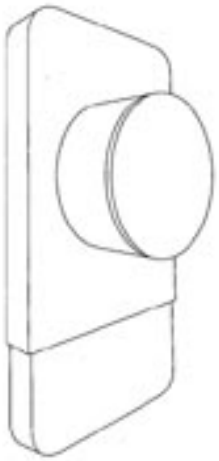

PRIORITY

PRIORITY NUMBER	DATE	COUNTRY
29/469,889	15/10/2013	U.S.A.

DESIGN NUMBER	266425
CLASS	26-05

1)ARNOLD & RICHTER CINE TECHNIK GMBH & CO BETRIEBS KG,
TURKENSTRAßE 89, 80799 MUNCHEN, GERMANY, A GERMAN COMPANY

DATE OF REGISTRATION	07/10/2014
TITLE	SPOTLIGHT

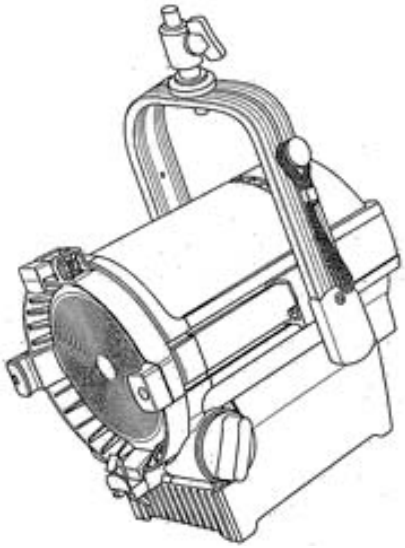

PRIORITY

PRIORITY NUMBER	DATE	COUNTRY
DE 40 2014 100 337.8	07/04/2014	GERMANY

DESIGN NUMBER	263261
CLASS	09-03

1)RESMED LTD, HAVING AN OFFICE AND PLACE OF BUSINESS AT
1 ELIZABETH MACARTHUR DRIVE, BELLA VISTA, NEW SOUTH WALES, 2153, AUSTRALIA

DATE OF REGISTRATION	11/06/2014
TITLE	PACKAGING

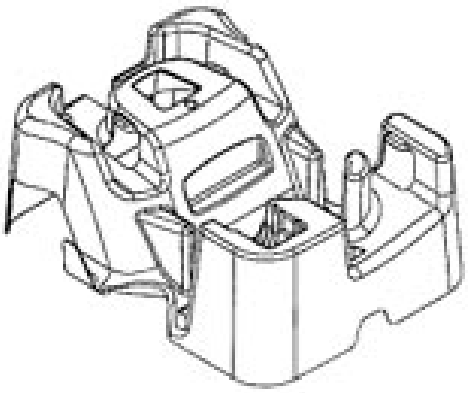

PRIORITY

PRIORITY NUMBER	DATE	COUNTRY
29/476,300	12/12/2013	U.S.A.

DESIGN NUMBER	264375	
CLASS	12-16	
1)TEK GLOBAL S.R.L., A CORPORATION ORGANIZED AND EXISTING UNDER THE LAWS OF ITALY, OF 11, VIA ICARO, PESARO, ITALY		
DATE OF REGISTRATION	30/07/2014	
TITLE	ACCESSORY FOR INFLATION AND REPAIR OF TYRES	
PRIORITY		

PRIORITY NUMBER	DATE	COUNTRY
002394833-0001	29/01/2014	OHIM

DESIGN NUMBER	266958	
CLASS	12-08	
1)BAYERISCHE MOTOREN WERKE AKTIENGESELLSCHAFT, OF PETUELRING 130, 80809, MUNICH, GERMANY, A GERMAN COMPANY		
DATE OF REGISTRATION	28/10/2014	
TITLE	CAR	
PRIORITY		

PRIORITY NUMBER	DATE	COUNTRY
DE 402014100427.7	13/05/2014	GERMANY

DESIGN NUMBER	264277	
CLASS	08-06	
1)KAPILBHAI BALVANTRAI VYAS AND JIGNESHBHAI CHHAGANBHAI GOHEL BOTH INDIAN NATIONAL PARTNER OF RATNAPRABHA HARDWARE AN INDIAN PARTNERSHIP FIRM HAVING ITS PRINCIPAL PLACE OF BUSINESS AT ADDRESS:- 6, PARSANA SOCIETY, 50 FEET ROAD, KOTHARIYA MAIN ROAD, RAJKOT-2. GUJARAT-INDIA		
DATE OF REGISTRATION	28/07/2014	
TITLE	HANDLE	
PRIORITY NA		

DESIGN NUMBER	266345	
CLASS	12-16	
1)SUZUKI MOTOR CORPORATION, A JAPANESE CORPORATION OF 300, TAKATSUKA-CHO, MINAMI-KU, HAMAMATSU-SHI, SHIZUOKA-KEN, JAPAN		
DATE OF REGISTRATION	30/09/2014	
TITLE	RADIATOR GRILL FOR VEHICLE	
PRIORITY NA		

DESIGN NUMBER	265768	
CLASS	15-03	
1)TRACTORS AND FARM EQUIPMENT LIMITED, COMPANY INCORPORATED UNDER THE COMPANIES ACT, 1956, HAVING ITS REGISTERED OFFICE AT NO. 861, ANNASALAI, CHENNAI-600002, TAMIL NADU, INDIA		
DATE OF REGISTRATION	19/09/2014	
TITLE	PLOUGH	
PRIORITY NA		

DESIGN NUMBER	264307	
CLASS	24-01	
1)NIPRO CORPORATION, 9-3, HONJONISHI 3-CHOME, KITA-KU, OSAKA-SHI, OSAKA, JAPAN, A JAPANESE CORPORATION		
DATE OF REGISTRATION	28/07/2014	
TITLE	BLOOD RESERVOIR WITH OXYGENATOR	

PRIORITY

PRIORITY NUMBER	DATE	COUNTRY
2014-002010	31/01/2014	JAPAN

DESIGN NUMBER	260967
CLASS	24-02
1)ETHICON ENDO-SURGERY, INC., A CORPORATION OF THE STATE OF OHIO, OF 4545 CREEK ROAD, CINCINNATI, OH 45242, USA	
DATE OF REGISTRATION	14/03/2014
TITLE	TORQUE WRENCH FOR A SURGICAL INSTRUMENT

PRIORITY

PRIORITY NUMBER	DATE	COUNTRY
29/467,313	18/09/2013	U.S.A.

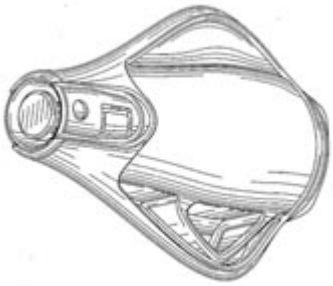

DESIGN NUMBER	263048
CLASS	02-02
1)VAKADA PALLAVI NAIDU, #101, MIG 70/71, 1-82-14/3, SP TOWERS, SECTOR-3, MVP COLONY, VISAKHAPATNAM-530017, INDIAN	
DATE OF REGISTRATION	02/06/2014
TITLE	SAREE
PRIORITY NA	

DESIGN NUMBER	261810
CLASS	14-99
1)SUMAN K. MULUMUDI, 16802 57TH AVENUE, S.E., SNOHOMISH, WA 98296, UNITED STATES OF AMERICA, A CITIZEN OF UNITED STATES OF AMERICA AND MAHESH S. MULUMUDI, 16802 57TH AVENUE, S.E., SNOHOMISH, WA 98296, UNITED STATES OF AMERICA, A CITIZEN OF UNITED STATES OF AMERICA	
DATE OF REGISTRATION	16/04/2014
TITLE	ELECTRONIC DEVICE CASING

PRIORITY

PRIORITY NUMBER	DATE	COUNTRY
29/469,889	15/10/2013	U.S.A.

DESIGN NUMBER	265757
CLASS	12-16
1)MR. SURESH DAMJI SHAH, AN INDIAN NATIONAL, TRADING AS ELITE ENGINEERS, A SOLE PROPRIETARY CONCERN AND CARRYING ON BUSINESS AT SAVLA NIVAS, 37, MALVIYA ROAD, VILE PARLE (E), MUMBAI-400057	
DATE OF REGISTRATION	18/09/2014
TITLE	CLUTCH PLATE
PRIORITY NA	

DESIGN NUMBER	257916
CLASS	06-08
1)TFS GLOBAL HANGER MANAGEMENT GMBH, A COMPANY UNDER GERMAN LAW OF HOHER WEG 2, 48513 NORDHORN, GERMANY	
DATE OF REGISTRATION	31/10/2013
TITLE	CLOTHES HANGER
PRIORITY NA	

DESIGN NUMBER	264376
CLASS	12-16
1)TEK GLOBAL S.R.L., A CORPORATION ORGANIZED AND EXISTING UNDER THE LAWS OF ITALY, OF 11, VIA ICARO, PESARO, ITALY	
DATE OF REGISTRATION	30/07/2014
TITLE	SEALANT CONTAINER IN A KIT FOR INFLATING AND REPAIRING TYRES

PRIORITY

PRIORITY NUMBER	DATE	COUNTRY
002394833-0002	29/01/2014	OHIM

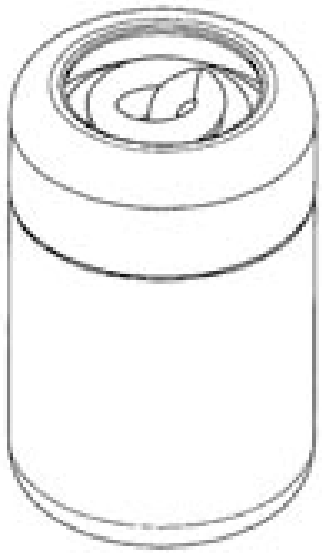

DESIGN NUMBER	264278	
CLASS	08-06	
1)KAPILBHAI BALVANTRAI VYAS AND JIGNESHBHAI CHHAGANBHAI GOHEL BOTH INDIAN NATIONAL PARTNER OF RATNAPRABHA HARDWARE AN INDIAN PARTNERSHIP FIRM HAVING ITS PRINCIPAL PLACE OF BUSINESS AT ADDRESS:- 6, PARSANA SOCIETY, 50 FEET ROAD, KOTHARIYA MAIN ROAD, RAJKOT-2. GUJARAT-INDIA		
DATE OF REGISTRATION	28/07/2014	
TITLE	HANDLE	
PRIORITY NA		
DESIGN NUMBER	266346	
CLASS	26-06	
1)SUZUKI MOTOR CORPORATION, A JAPANESE CORPORATION OF 300, TAKATSUKA-CHO, MINAMI-KU, HAMAMATSU-SHI, SHIZUOKA-KEN, JAPAN		
DATE OF REGISTRATION	30/09/2014	
TITLE	HEADLIGHT FOR VEHICLE	
PRIORITY NA		
DESIGN NUMBER	261976	
CLASS	10-04	
1)M/S. H. GURU INSTRUMENTS PVT. LTD., ITS HAVING REGISTERED OFFICE AT 10B, HO-CHI-MINH, SARANI, KOLKATA-700071 (W.B.) INDIA, AN INDIAN COMPANY WHOSE MANAGING DIRECTOR IS MR. GURU DAS HAZRA, INDIAN NATIONAL OF THE ABOVE ADDRESS		
DATE OF REGISTRATION	24/04/2014	
TITLE	PRESSURE GAUGE	
PRIORITY NA		

DESIGN NUMBER	265148
CLASS	25-02
1)BLÜCHER METAL A/S A COMPANY INCORPORATED UNDER THE LAWS OF DENMARK AND HAVING THEIR ADDRESS AT PUGDALVEJ 1, 7480 VILDBJERG, DENMARK	
DATE OF REGISTRATION	26/08/2014
TITLE	GRATINGS FOR DRAINS
PRIORITY	

PRIORITY NUMBER	DATE	COUNTRY
002415398-0003	28/02/2014	OHIM

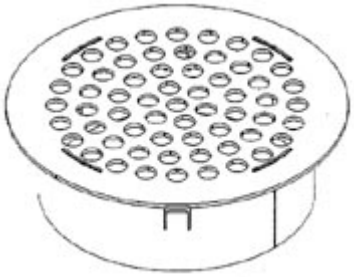

DESIGN NUMBER	262629
CLASS	15-04
1)CDE ASIA LIMITED OF ECOSPACE BUSINESS PARK, BLOCK 4A, 6TH FLOOR, ACTION AREA II, NEW TOWN, KOLKATA-700156, STATE OF WEST BENGAL, INDIA, AN INDIAN COMPANY	
DATE OF REGISTRATION	15/05/2014
TITLE	SYSTEM DEVICE PROCESS FOR CLASSIFICATION OF VARIOUS MATERIALS
PRIORITY NA	

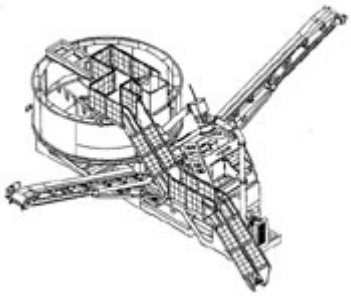

DESIGN NUMBER	265817
CLASS	23-02
1)DOLLY GLASS OF 24A, RABINDRA SARANI, 3RD FLOOR, ROOM NO. 110, KOLKATA-700 073, STATE OF WEST BENGAL, INDIA, AN INDIAN PARTNERSHIP FIRM WHOSE PARTNERS ARE MR. JAYKUMAR RASIKLAL SHAH NAD JIGAR SATISH VASHA, INDIAN NATIONALS OF THE ABOVE ADDRESS	
DATE OF REGISTRATION	17/09/2014
TITLE	WASHBASIN
PRIORITY NA	

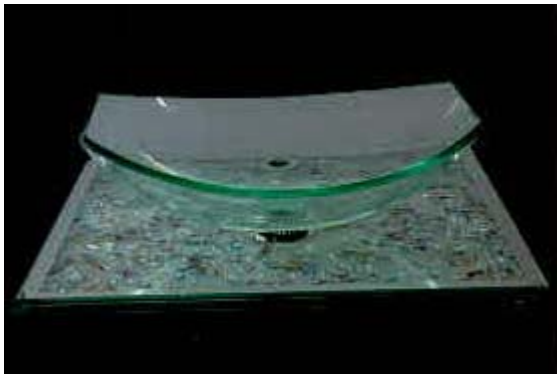

DESIGN NUMBER	264902
CLASS	07-02
1)PREETHI KITCHEN APPLIANCES PRIVATE LIMITED, AN INDIAN COMPANY INCORPORATED UNDER THE PROVISIONS OF THE COMPANIES ACT, 1956, OF TECHNOPOLIS KNOWLEDGE PARK, MAHAKALI CAVES ROAD, CHAKALA, ANDHERI-EAST, MUMBAI-400093, INDIA	
DATE OF REGISTRATION	20/08/2014
TITLE	GLASS TOP GAS STOVE
PRIORITY NA	

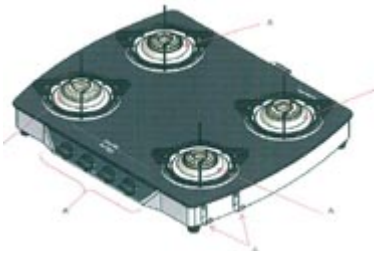

DESIGN NUMBER	264299
CLASS	12-16
1)EUROPEAN TRAILER SYSTEMS GMBH, A LIMITED LIABILITY CORPORATION ORGANISED AND EXISTING UNDER THE LAWS OF GERMANY WHOSE ADDRESS IS IM MOERSER FELD 1F, 47441 MOERS, GERMANY	
DATE OF REGISTRATION	28/07/2014
TITLE	TARPAULIN ROLLERS FOR TRUCKS

PRIORITY

PRIORITY NUMBER	DATE	COUNTRY
DM/083 027	31/01/2014	GERMANY

DESIGN NUMBER	260932
CLASS	15-09
1)(1) DMG MORI SEIKI CO., LTD, OF 106, KITAKORIYAMA-CHO, YAMATOKORIYAMA-SHI, NARA, 639-1160, JAPAN, A JAPANESE COMPANY AND (2) DMG MORI SEIKI AKTIENGESELLSCHAFT, OF GILDEMEISTERSTRAßE 60, 33689 BIELEFELD, GERMANY, A GERMAN COMPANY	
DATE OF REGISTRATION	12/03/2014
TITLE	MILLING MACHINE

PRIORITY

PRIORITY NUMBER	DATE	COUNTRY
002309245-0004	13/09/2013	OHIM

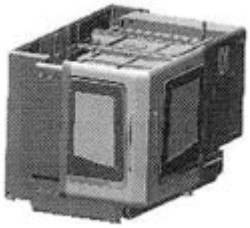

DESIGN NUMBER	264620
CLASS	26-03

1)KONINKLIJKE PHILIPS N.V., A COMPANY ORGANIZED AND EXISTING UNDER THE LAWS OF THE KINGDOM OF THE NETHERLANDS, RESIDING AT EINDHOVEN,
WHOSE POST-OFFICE ADDRESS IS HIGH TECH CAMPUS 5, 5656 AE EINDHOVEN, THE NETHERLANDS

DATE OF REGISTRATION	08/08/2014
TITLE	ROAD LED FIXTURE

PRIORITY

PRIORITY NUMBER	DATE	COUNTRY
002432823-0001	26/03/2014	OHIM

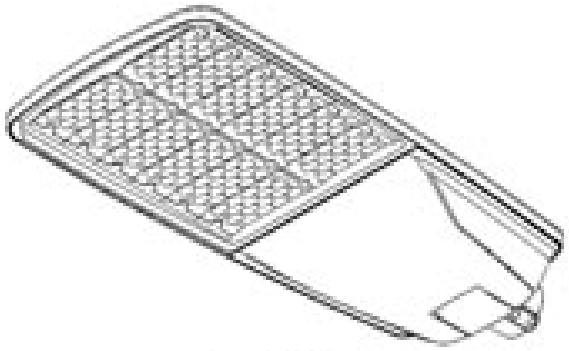

DESIGN NUMBER	261860
CLASS	07-01

1)EMSA GMBH, A GERMAN COMPANY WITH LIMITED LIABILITY, OF
GREVENER DAMM 215-225, 48282 EMSDETTEN, GERMANY

DATE OF REGISTRATION	21/04/2014
TITLE	VACUUM JUG

PRIORITY

PRIORITY NUMBER	DATE	COUNTRY
002332221-0010	23/10/2013	OHIM

DESIGN NUMBER	253311
CLASS	13-03

1)SIMON, S.A.U., A ‘‘SOCIEDAD ANONIMA UNIPERSONAL’’ UNDER THE LAWS OF SPAIN, OF
DIPUTACION 390-392, 08013, BARCELONA, SPAIN

DATE OF REGISTRATION	23/04/2013
TITLE	FRAME FOR ELECTRIC DEVICES

PRIORITY NA

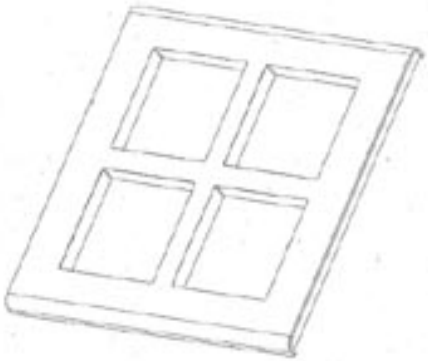

DESIGN NUMBER	264897
CLASS	07-02
1)PREETHI KITCHEN APPLIANCES PRIVATE LIMITED, AN INDIAN COMPANY INCORPORATED UNDER THE PROVISIONS OF THE COMPANIES ACT, 1956, OF TECHNOPOLIS KNOWLEDGE PARK, MAHAKALI CAVES ROAD, CHAKALA, ANDHERI-EAST, MUMBAI-400093, INDIA	
DATE OF REGISTRATION	20/08/2014
TITLE	GLASS TOP GAS STOVE
PRIORITY NA	

DESIGN NUMBER	264377
CLASS	12-16
1)TEK GLOBAL S.R.L., A CORPORATION ORGANIZED AND EXISTING UNDER THE LAWS OF ITALY, OF 11, VIA ICARO, PESARO, ITALY	
DATE OF REGISTRATION	30/07/2014
TITLE	SEALANT CONTAINER IN A KIT FOR INFLATING AND REPAIRING TYRES
PRIORITY	

PRIORITY NUMBER	DATE	COUNTRY
002394833-0004	29/01/2014	OHIM

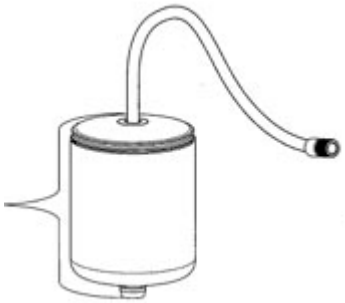

DESIGN NUMBER	263803
CLASS	09-03
1)RUCHI SOYA INDUSTRIES LTD., AN INDIAN COMPANY HAVING REGISTERED ADDRESS AS 614, TULSIANI CHAMBERS, NARIMAN POINT, MUMBAI-400021, MAHARASHTRA, INDIA	
DATE OF REGISTRATION	01/07/2014
TITLE	OIL CONTAINER
PRIORITY NA	

DESIGN NUMBER	264285
CLASS	26-06
1)MINDA INDUSTRIES LTD. (LIGHTING DIVISION), AN INDIAN COMPANY OF 34-35, K.M. G. T. ROAD, VILL. SONIPAT, HARYANA-131029, INDIA	
DATE OF REGISTRATION	28/07/2014
TITLE	LED FLOOR LAMP FOR VEHICLE
PRIORITY NA	

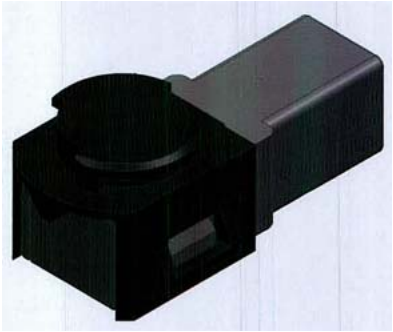

DESIGN NUMBER	264774
CLASS	15-06
1)MASCHINENFABRIK RIETER AG, A CORPORATION ORGANIZED AND EXISTING UNDER THE LAWS OF SWITZERLAND, OF KLOSTERSTRASSE 20, 8406 WINTERTHUR, SWITZERLAND	
DATE OF REGISTRATION	14/08/2014
TITLE	INSERT FOR A SUCTION TUBE IN A RING SPINNING DEVICE
PRIORITY	

PRIORITY NUMBER	DATE	COUNTRY
201430077398.X	28/03/2014	CHINA

DESIGN NUMBER	261639
CLASS	08-07
1)HINDUSTHAN NATIONAL GLASS & INDUSTRIES LTD, HAVING ITS REGISTERED OFFICE AT 2 RED CROSS PLACE 2ND FLOOR, KOLKATA-700001	
DATE OF REGISTRATION	09/04/2014
TITLE	CAP FOR BOTTLE
PRIORITY NA	

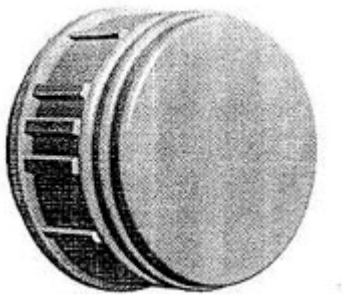

DESIGN NUMBER	267272
CLASS	31-00
1)PREETHI KITCHEN APPLIANCES PRIVATE LIMITED, A COMPANY INCORPORATED UNDER THE INDIAN COMPANIES ACT 1956 AND HAVING OFFICE AT TECHNOPOLIS KNOWLEDGE PARK, MAHAKALI CAVES ROAD, CHAKALA, ANDHERI-EAST, MUMBAI-400093, INDIA	
DATE OF REGISTRATION	07/11/2014
TITLE	TABLE TOP GRINDER
PRIORITY NA	

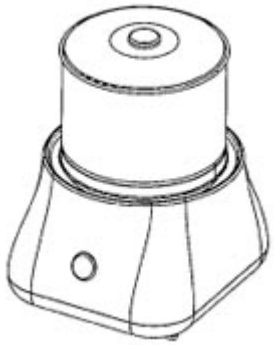

DESIGN NUMBER	265108
CLASS	23-04
1)FARADAY INSTRUMENTS, AN INDIAN COMPANY HAVING ITS REGISTERED ADDRESS AT SF. NO. 106/4A REVENUE NAGAR, OPP TO HDFC BANK, SARAVANAMPATTI NORTH, COIMBATORE-641035, TAMILNADU, INDIA	
DATE OF REGISTRATION	25/08/2014
TITLE	AIR STERILIZER
PRIORITY NA	

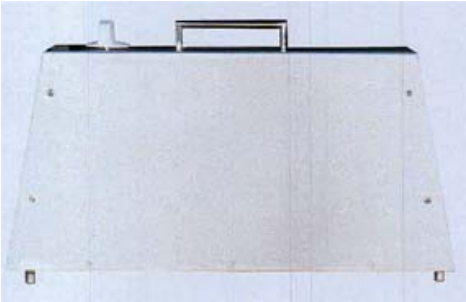

DESIGN NUMBER	265778
CLASS	27-06
1)GODFREY PHILLIPS INDIA LIMITED, AN INDIAN COMPANY OF 49 COMMUNITY CENTRE, NEW FRIENDS COLONY, NEW DELHI-110025, INDIA	
DATE OF REGISTRATION	19/09/2014
TITLE	SMART PERSONAL CHARGING CASE FOR ELECTRONIC CIGARETTES
PRIORITY NA	

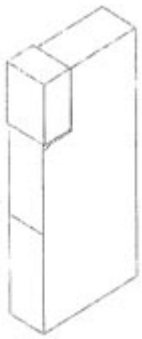

DESIGN NUMBER	265510
CLASS	05-05

1)JADE ESERVICES PRIVATE LIMITED HAVING ADDRESS AS
PLOT NO. 103, UDYOG VIHAR, PHASE-I, GURGAON-122 016, HARYANA, INDIA

DATE OF REGISTRATION	09/09/2014
TITLE	TEXTILE FABRIC

PRIORITY NA

DESIGN NUMBER	265569
CLASS	31-00

1)MR. HASMUKH M. JAIN INDIAN NATIONAL, TRADING AS M/S. BHAIRAV PLASTIC CARRYING ON BUSINESS ADDRESS AT
1/8, RAMDAS PADHYE BUILDING, S. K. BOLE ROAD, DADAR-WEST, MUMBAI-400028, MAHARASHTRA, INDIA

DATE OF REGISTRATION	10/09/2014
TITLE	BASE OF MIXER

PRIORITY NA

DESIGN NUMBER	262539
CLASS	12-16

1)SCANIA CV AB, A SWEDISH COMPANY OF,
SE-151 87, SÖDERTÄLJE, SWEDEN

DATE OF REGISTRATION	13/05/2014
TITLE	STEPPLATE

PRIORITY

PRIORITY NUMBER	DATE	COUNTRY
2013/0489	11/12/2013	SWEDEN

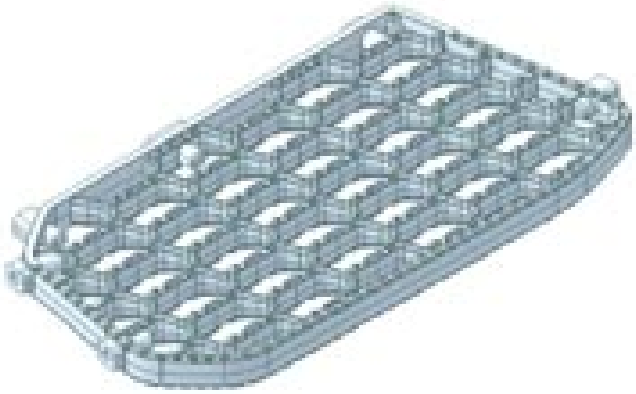

DESIGN NUMBER	264215
CLASS	13-03
1)ABB TECHNOLOGY LTD, A SWISS COMPANY OF AFFOLTERNSTRASSE 44, 8050 ZURICH, SWITZERLAND	
DATE OF REGISTRATION	24/07/2014
TITLE	CONTROL APPARATUS FOR PROTECTION AND MONITORING
PRIORITY	

PRIORITY NUMBER	DATE	COUNTRY
002391292-0001	24/01/2014	OHIM

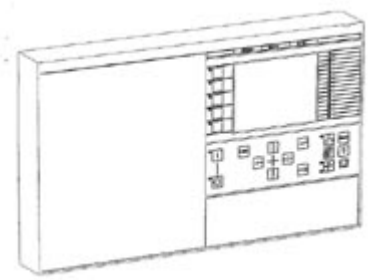

DESIGN NUMBER	259642
CLASS	08-06
1)MR. BIPINBHAI CHANABHAI CHOTHANI., AN INDIAN NATIONAL SOLE PROPRIETOR OF M/S. HITESH FURNITURE FITTINGS., AN INDIAN PROPRIETORSHIP FIRM., HAVING ITS PRINCIPAL PLACE OF BUSINESS AT, SHRI HARI IND. ZONE-1, AJI RING ROAD, BY PASS, NR. RADHA PALACE HOTEL, 40 FEET ROAD, NR. RAJ HANSH PAN, RAJKOT-360002. GUJARAT-INDIA.	
DATE OF REGISTRATION	24/01/2014
TITLE	HANDLE
PRIORITY NA	

DESIGN NUMBER	266549
CLASS	23-04
1)LUMINOUS POWER TECHNOLOGIES PVT. LTD., AN INDIAN NATIONAL COMPANY, INCORPORATED UNDER COMPANIES ACT. WHOES ADDRESS IS ARO TOWER, PLOT-300, 2ND FLOOR, UDYOG VIHAR, PHASE-2, GURGAON-122016, HARYANA (INDIA)	
DATE OF REGISTRATION	09/10/2014
TITLE	CEILING FAN
PRIORITY NA	

DESIGN NUMBER	265508
CLASS	30-01
1)"SHIVAM POLYMERS", AN INDIAN NATIONAL COMPANY, HAVING REGISTERED OFFICE AT B-16 SITE-B, SURAJPUR INDUSTRIAL AREA, GREATER NOIDA-21306, UTTAR PRADESH.	
DATE OF REGISTRATION	08/09/2014
TITLE	BOOT FOR HORSES
PRIORITY NA	

DESIGN NUMBER	266932
CLASS	06-01
1)THE SUPREME INDUSTRIES LTD., (AN INDIAN PUBLIC LIMITED COMPANY), 601 CENTRAL PLAZA, 2/6, SARAT BOSE ROAD, KOLKATA - 700020, WEST BENGAL, INDIA	
DATE OF REGISTRATION	28/10/2014
TITLE	CHAIR
PRIORITY NA	

DESIGN NUMBER	264182
CLASS	12-08
1)BAYERISCHE MOTOREN WERKE AKTIENGESELLSCHAFT, OF PETUELRING 130, 80809, MUENCHEN, GERMANY, A GERMAN COMPANY	
DATE OF REGISTRATION	21/07/2014
TITLE	CAR

PRIORITY

PRIORITY NUMBER	DATE	COUNTRY
DE 402014100066.2	28/01/2014	GERMANY

DESIGN NUMBER	264310
CLASS	24-01
1)NIPRO CORPORATION, 9-3, HONJONISHI 3-CHOME, KITA-KU, OSAKA-SHI, OSAKA, JAPAN, A JAPANESE CORPORATION	
DATE OF REGISTRATION	28/07/2014
TITLE	HOLDER FOR BLOOD RESERVOIR
PRIORITY	

PRIORITY NUMBER	DATE	COUNTRY
2014-002033	31/01/2014	JAPAN

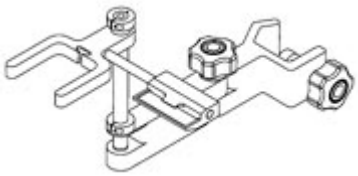

DESIGN NUMBER	265147
CLASS	25-02
1)BLÜCHER METAL A/S A COMPANY INCORPORATED UNDER THE LAWS OF DENMARK AND HAVING THEIR ADDRESS AT PUGDALVEJ 1, 7480 VILDBJERG, DENMARK	
DATE OF REGISTRATION	26/08/2014
TITLE	GRATINGS FOR DRAINS
PRIORITY	

PRIORITY NUMBER	DATE	COUNTRY
002415398-0003	28/02/2014	OHIM

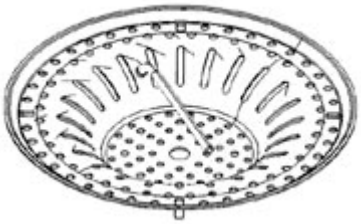

DESIGN NUMBER	262628
CLASS	15-04
1)CDE ASIA LIMITED OF ECOSPACE BUSINESS PARK, BLOCK 4A, 6TH FLOOR, ACTION AREA II, NEW TOWN, KOLKATA-700156, STATE OF WEST BENGAL, INDIA, AN INDIAN COMPANY	
DATE OF REGISTRATION	15/05/2014
TITLE	A SYSTEM, A DEVICE AND A METHOD FOR RECOVERING AND DEWATERING FINER PARTICLES
PRIORITY NA	

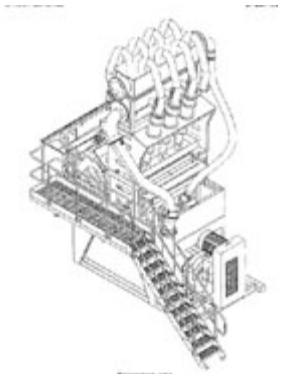

DESIGN NUMBER	265816
CLASS	23-02
1)DOLLY GLASS OF 24A, RABINDRA SARANI, 3RD FLOOR, ROOM NO. 110, KOLKATA-700073, STATE OF WEST BENGAL, INDIA, AN INDIAN PARTNERSHIP FIRM WHOSE PARTNERS ARE MR. JAYKUMAR RASIKLAL SHAH NAD JIGAR SATISH VASHA, INDIAN NATIONALS OF THE ABOVE ADDRESS	
DATE OF REGISTRATION	17/09/2014
TITLE	WASHBASIN
PRIORITY NA	

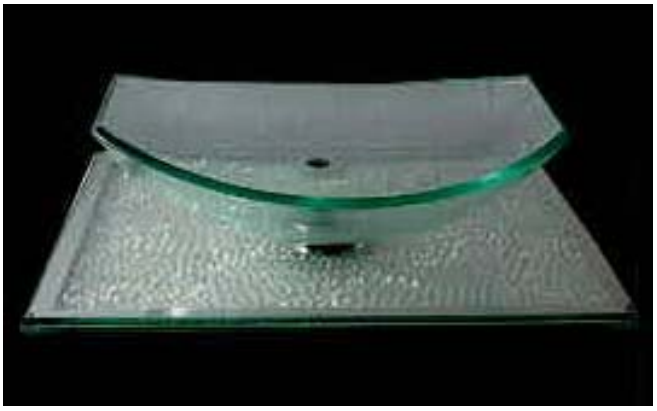

DESIGN NUMBER	264901
CLASS	07-02
1)PREETHI KITCHEN APPLIANCES PRIVATE LIMITED, AN INDIAN COMPANY INCORPORATED UNDER THE PROVISIONS OF THE COMPANIES ACT, 1956, OF TECHNOPOLIS KNOWLEDGE PARK, MAHAKALI CAVES ROAD, CHAKALA, ANDHERI-EAST, MUMBAI-400093, INDIA	
DATE OF REGISTRATION	20/08/2014
TITLE	GLASS TOP GAS STOVE
PRIORITY NA	

DESIGN NUMBER	259936
CLASS	12-08
1)TATA MOTORS LIMITED, AN INDIAN COMPANY OF BOMBAY HOUSE, 24 HOMI MODY STREET, HUTATMA CHOWK, MUMBAI 400 001, MAHARASHTRA, INDIA	
DATE OF REGISTRATION	31/01/2014
TITLE	ARMOURED VEHICLE
PRIORITY NA	

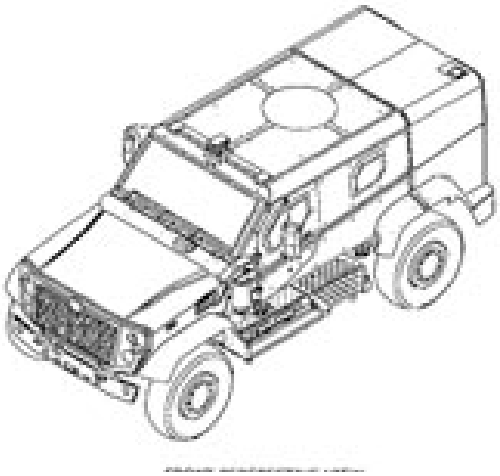

DESIGN NUMBER	254518
CLASS	09-05
1)MCNEIL-PPC, INC., A CORPORATION OF THE STATE OF NEW JERSEY, OF 199 GRANDVIEW ROAD, SKILLMAN, NJ 08558, U.S.A.	
DATE OF REGISTRATION	14/06/2013
TITLE	WRAPPER FOR SANITARY ABSORBENT NAPKIN

PRIORITY

PRIORITY NUMBER	DATE	COUNTRY
29/439,876	17/12/2012	U.S.A.

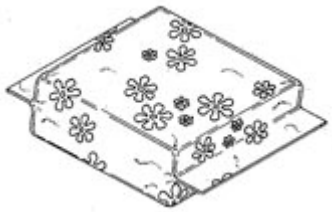

DESIGN NUMBER	264289
CLASS	09-07
1)DART INDUSTRIES INC., A CORPORATION FOUNDED UNDER THE LAWS OF DELAWARE, U.S.A. OF 14901 SOUTH ORANGE BLOSSOM TRAIL, ORLANDO, FLORIDA 32837, USA	
DATE OF REGISTRATION	28/07/2014
TITLE	SPOUT CAP

PRIORITY

PRIORITY NUMBER	DATE	COUNTRY
29/483,438	28/02/2014	U.S.A.

DESIGN NUMBER	260920
CLASS	15-09
1)(1) DMG MORI SEIKI CO., LTD, OF 106, KITAKORIYAMA-CHO, YAMATOKORIYAMA-SHI, NARA, 639-1160, JAPAN, A JAPANESE COMPANY AND (2) DMG MORI SEIKI AKTIENGESELLSCHAFT, OF GILDEMEISTERSTRAßE 60, 33689 BIELEFELD, GERMANY, A GERMAN COMPANY	
DATE OF REGISTRATION	11/03/2014
TITLE	ACCESSORY FOR MACHINE TOOLS

PRIORITY

PRIORITY NUMBER	DATE	COUNTRY
002309245-0015	13/09/2013	OHIM

DESIGN NUMBER	267706	
CLASS	06-04	
1)THE SUPREME INDUSTRIES LTD., (AN INDIAN PUBLIC LIMITED COMPANY), 601 CENTRAL PLAZA, 2/6, SARAT BOSE ROAD, KOLKATA - 700020, WEST BENGAL, INDIA		
DATE OF REGISTRATION	26/11/2014	
TITLE	CUPBOARD	
PRIORITY NA		
DESIGN NUMBER	262884	
CLASS	08-08	
1)RAJILKUMAR MAGANLAL TRAMBADIA (ADULT AND INDIAN NATIONAL) SOLE PROPRIETOR OF SHREE NILKANTHVARI CREATION (INDIAN PROPRIETORSHIP CONCERN) HAVING PLACE OF BUSINESS AT: NAVRANGPARA-8, MAVDI PLOT, RAJKOT-GUJARAT-(INDIA)		
DATE OF REGISTRATION	26/05/2014	
TITLE	CURTAIN BRACKET	
PRIORITY NA		
DESIGN NUMBER	267463	
CLASS	23-03	
1)GUANGDONG GEMAKE ELECTRIC APPLIANCE CO., LTD, GEMAKE INDUSTRIAL PARK, DONGFU ROAD, DONGFENG TOWN, ZHONGSHAN CITY, GUANGDONG PROVINCE, PR CHINA, A COMPANY OF CHINA		
DATE OF REGISTRATION	17/11/2014	
TITLE	ELECTRIC WATER HEATER	
PRIORITY NA		

DESIGN NUMBER	265374
CLASS	12-08

1)BAYERISCHE MOTOREN WERKE AKTIENGESELLSCHAFT, OF
PETUELRING 130, 80809, MUENCHEN, GERMANY, A GERMAN COMPANY

DATE OF REGISTRATION	02/09/2014
TITLE	CAR

PRIORITY

PRIORITY NUMBER	DATE	COUNTRY
DE 402014100280.0	17/03/2014	GERMANY

DESIGN NUMBER	260152
CLASS	13-03

1)INTELLIGENT ENERGY LIMITED OF
CHARNWOOD BUILDING, HOLYWELL PARK, ASHBY ROAD, LOUGHBOROUGH, LEICESTERSHIRE, LE11 3GB, UNITED KINGDOM

DATE OF REGISTRATION	06/02/2014
TITLE	END PORT COVER

PRIORITY

PRIORITY NUMBER	DATE	COUNTRY
29/462,700	07/08/2013	U.S.A.

DESIGN NUMBER	266759
CLASS	07-01

1)NAYASA SUPERPLAST OF SURVEY NO. 370/2 (7) KACHIGAM, NANI DAMAN, DAMAN-396 210, (UNION TERRITORIES), INDIA,
INDIAN PARTNERSHIP FIRM, WHOSE PARTNERS ARE SACHIN SACHDEV & MANASI SACHDEV, ALL INDIAN NATIONALS

DATE OF REGISTRATION	16/10/2014
TITLE	WATER JUG

PRIORITY NA

DESIGN NUMBER	263252
CLASS	24-04

1)RESMED LTD, HAVING AN OFFICE AND PLACE OF BUSINESS AT
1 ELIZABETH MACARTHUR DRIVE, BELLA VISTA, NEW SOUTH WALES, 2153, AUSTRALIA

DATE OF REGISTRATION	11/06/2014
TITLE	FRAME FOR PATIENT INTERFACE FOR USE WITH AIR DELIVERY APPARATUS

PRIORITY

PRIORITY NUMBER	DATE	COUNTRY
29/476,296	12/12/2013	U.S.A.

DESIGN NUMBER	266112
CLASS	30-03

1)MR. OAN E. DILAWARE, INDIAN NATIONAL, CARRYING ON BUSINESS AS A PROPRIETOR UNDER THE NAME AND STYLE OF M/S NATURE INDIA ECO SOLUTION HAVING ITS PRINCIPAL PLACE OF BUSINESS ADDRESS AT
SHOP NO. 14, THAKKAR PRIDE, OPP. SIDDHARTH HOTEL, NASHIK-422011

DATE OF REGISTRATION	29/09/2014
TITLE	FEEDER FOR BIRDS

PRIORITY NA

DESIGN NUMBER	264081
CLASS	06-04

1)TEGOMETALL INTERNATIONAL AG, OF
INDUSTRIESTRASSE 7, 8574 LENGWIL, SWITZERLAND

DATE OF REGISTRATION	17/07/2014
TITLE	RACK REAR WALL

PRIORITY

PRIORITY NUMBER	DATE	COUNTRY
001402523	10/02/2014	OHIM

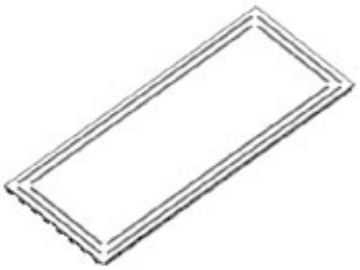

DESIGN NUMBER	258657	
CLASS	23-02	
1)NAYASA SUPERPLAST OF SURVEY NO. 370/2 (7) KACHIGAM, NANI DAMAN, DAMAN-396210, (UNION TERRITORIES), INDIA, INDIAN PARTNERSHIP FIRM, WHOSE PARTNERS ARE SACHIN SACHDEV & MANASI SACHDEV, ALL INDIAN NATIONALS		
DATE OF REGISTRATION	11/12/2013	
TITLE	BATHROOM SHELVES	
PRIORITY NA		

DESIGN NUMBER	263383	
CLASS	09-01	
1)PIRAMAL ENTERPRISES LIMITED, WHOSE ADDRESS IS PIRAMAL TOWER, GANPATRAO KADAM MARG, LOWER PAREL, MUMBAI 400013, MAHARASHTRA, INDIA		
DATE OF REGISTRATION	16/06/2014	
TITLE	PERFUME BOTTLE	
PRIORITY NA		

DESIGN NUMBER	264667	
CLASS	12-15	
1)FORTUNE GOLD ENTERPRISES LTD., A CORPORATION ORGANISED AND EXISTING UNDER THE LAWS OF REPUBLIC OF SEYCHELLES WHOSE ADDRESS IS SUITE 13, FIRST FLOOR, OLIAJI TRADE CENTER, FRANCIS RACHEL STREET, VICTORIA, MAHE, REPUBLIC OF SEYCHELLES		
DATE OF REGISTRATION	11/08/2014	
TITLE	TYRE	
PRIORITY NA		

DESIGN NUMBER	264763
CLASS	02-03
1)VEGA AUTO ACCESSORIES PVT LTD., REPRESENTED BY ITS DIRECTOR MR. GIRIDHARI CHANDAK., HAVING OFFICE AT: NO. 543, VITHALDEV LANE, SHAHAPUR, BELGAUM-590003, NATIONALITY: INDIAN.	
DATE OF REGISTRATION	13/08/2014
TITLE	HELMET
PRIORITY NA	

DESIGN NUMBER	262929
CLASS	13-02
1)ROBERT BOSCH GMBH, A GERMAN COMPANY OF POSTFACH 30 02 20, D-70442 STUTTGART, GERMANY	
DATE OF REGISTRATION	27/05/2014
TITLE	RECHARGEABLE BATTERY AND HOUSING THEREFOR

PRIORITY

PRIORITY NUMBER	DATE	COUNTRY
002353169	28/11/2013	OHIM

DESIGN NUMBER	262291
CLASS	13-03
1)SAVANT SYSTEMS, LLC, A U.S. LIMITED LIABILITY CORPORATION, OF 45 PERSEVERANCE WAY, HYANNIS, MA 02601, U.S.A.	
DATE OF REGISTRATION	02/05/2014
TITLE	LAMP CONTROL MODULE FOR LIGHTING CONTROL SYSTEM

PRIORITY

PRIORITY NUMBER	DATE	COUNTRY
29/471,640	04/11/2013	U.S.A.

DESIGN NUMBER	265180
CLASS	24-01
1)AMIT BHATNAGAR AN INDIAN CITIZEN RESIDING AT AN INDIAN CITIZEN OF 758, SECTOR 47, GURGAON-122018, HARYANA, INDIA	
DATE OF REGISTRATION	27/08/2014
TITLE	BLOOD TESTING APPARATUS
PRIORITY NA	

DESIGN NUMBER	253308
CLASS	13-03
1)SIMON, S.A.U., A ''SOCIEDAD ANONIMA UNIPERSONAL''□ UNDER THE LAWS OF SPAIN, OF DIPUTACION 390-392, 08013, BARCELONA, SPAIN	
DATE OF REGISTRATION	23/04/2013
TITLE	FRAME FOR ELECTRIC DEVICES
PRIORITY NA	

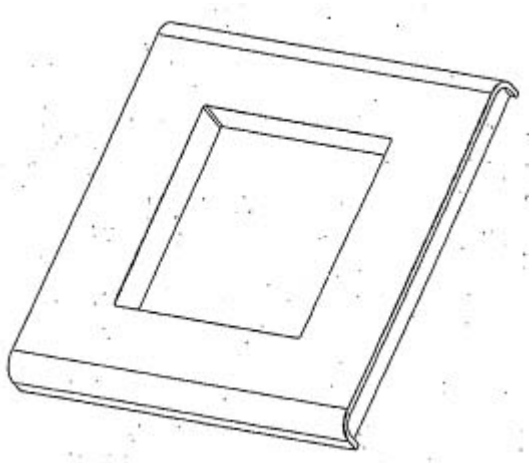

DESIGN NUMBER	263260
CLASS	09-03
1)RESMED LTD, HAVING AN OFFICE AND PLACE OF BUSINESS AT 1 ELIZABETH MACARTHUR DRIVE, BELLA VISTA, NEW SOUTH WALES, 2153, AUSTRALIA	
DATE OF REGISTRATION	11/06/2014
TITLE	PACKAGING

PRIORITY

PRIORITY NUMBER	DATE	COUNTRY
29/476,300	12/12/2013	U.S.A.

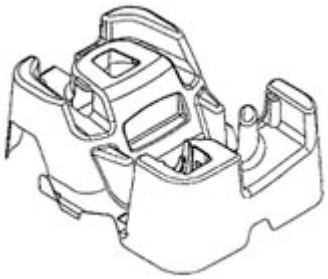

DESIGN NUMBER	263771
CLASS	10-04
1)MR. MAHESH DESHMUKH, INDIAN NATIONAL ON BEHALF OF CHETAS CONTROL SYSTEMS PVT. LTD., A FIRM HAVING ITS PRINCIPAL PLACE OF BUSINESS ADDRESS AT CHETAS HOUSE, PLOT NO. 1, SURVEY NO. 8+9, SIDDHATEK SOCIETY, NEAR PASHAN LAKE, SUTARWADI, PASHAN, PUNE-411021	
DATE OF REGISTRATION	01/07/2014
TITLE	WATER METER FOR WATER FLOW MEASUREMENT
PRIORITY NA	

DESIGN NUMBER	261638
CLASS	09-07
1)HINDUSTHAN NATIONAL GLASS & INDUSTRIES LTD, HAVING ITS REGISTERED OFFICE AT 2 RED CROSS PLACE 2ND FLOOR, KOLKATA-700001	
DATE OF REGISTRATION	09/04/2014
TITLE	BOTTLE NECK
PRIORITY NA	

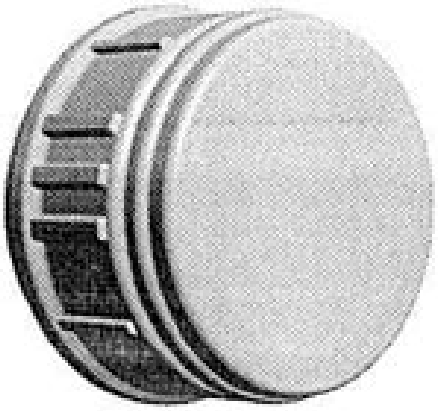

DESIGN NUMBER	267778
CLASS	31-00
1)PREETHI KITCHEN APPLIANCES PRIVATE LIMITED, AN INDIAN COMPANY INCORPORATED UNDER THE PROVISIONS OF THE COMPANIES ACT, 1956, OF TECHNOPOLIS KNOWLEDGE PARK, MAHAKALI CAVES ROAD, CHAKALA, ANDHERI-EAST, MUMBAI-400093, INDIA	
DATE OF REGISTRATION	27/11/2014
TITLE	BASE UNIT OF A MIXER GRINDER
PRIORITY NA	

DESIGN NUMBER	259765	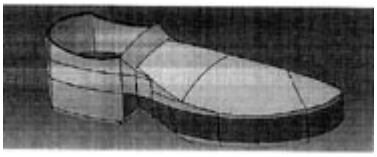
CLASS	02-04	
1)KRISHNA SAI INKOOLU, C/O. PROF. R. ANITA RAO, FLAT NO. 3, ELEGANCE ENCLAVE, FACOR LAYOUT, WALTAIRE UPLANDS, VISHAKHAPATNAM 530003, ANDHRA PRADESH, INDIA, AN INDIAN CITIZEN		
DATE OF REGISTRATION	28/01/2014	
TITLE	SHOE FOR BLIND PEOPLE	
PRIORITY NA		

DESIGN NUMBER	254788	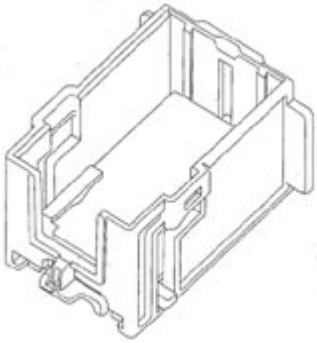
CLASS	19-02	
1)MAX CO. LTD., A JAPANESE COMPANY ORGANIZED AND EXISTING UNDER THE LAWS OF JAPAN, OF 6-6, NIHONBASHI HAKOZAKI-CHO, CHUO-KU, TOKYO 103-8502, JAPAN		
DATE OF REGISTRATION	25/06/2013	
TITLE	STAPLE CARTRIDGE	
PRIORITY		

PRIORITY NUMBER	DATE	COUNTRY
2012-031826	27/12/2012	JAPAN

DESIGN NUMBER	261308	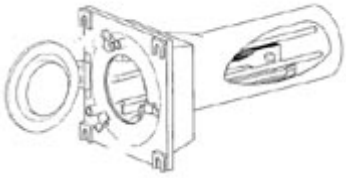
CLASS	15-09	
1)(1) TATA STEEL LIMITED, RESEARCH AND DEVELOPMENT DIVISION, JAMSHEDPUR-831 001, INDIA, AN INDIAN COMPANY, & (2) COUNCIL OF SCIENTIFIC & INDUSTRIAL RESEARCH (CSIR), OF ANUSANDHAN BHAWAN, RAFI MARG, NEW DELHI-110 001, INDIA, AN INDIAN ORGANISATION		
DATE OF REGISTRATION	27/03/2014	
TITLE	ANNEALING SIMULATOR DEVICE FOR TESTING AND CHARACTERIZATION OF STEEL SPECIMENS	
PRIORITY NA		

DESIGN NUMBER	265509
CLASS	05-05
1)JADE ESERVICES PRIVATE LIMITED HAVING ADDRESS AS PLOT NO. 103, UDYOG VIHAR, PHASE-I, GURGAON-122016, HARYANA, INDIA	
DATE OF REGISTRATION	09/09/2014
TITLE	TEXTILE FABRIC
PRIORITY NA	

DESIGN NUMBER	265135
CLASS	29-01
1)RESGUARDO INDUSTRIES, AN INDIAN COMPANY INCORPORATED UNDER THE COMPANIES ACT, 1957, HAVING PRINCIPLE PLACE OF BUSINESS AT SHED NO. 3, PLOT NO. 17, JIGANI INDUSTRIAL AREA, 1ST PHASE, ANEKAL TALUK, BANGALORE URBAN DISTRICT-562 106, KARNATAKA, INDIA	
DATE OF REGISTRATION	26/08/2014
TITLE	FIRE SNIPER VALVE
PRIORITY NA	

DESIGN NUMBER	258539
CLASS	27-01
1)BRITISH-AMERICAN TOBACCO (HOLDINGS) LIMITED, OF GLOBE HOUSE, 4 TEMPLE PLACE, LONDON WC2R 2PG, UNITED KINGDOM	
DATE OF REGISTRATION	03/12/2013
TITLE	ELECTRONIC CIGARETTE

PRIORITY

PRIORITY NUMBER	DATE	COUNTRY
002249334-0002	04/06/2013	OHIM

DESIGN NUMBER	265859
CLASS	31-00
1)HOMELAND HOUSEWARES, LLC OF 11755 WILSHIRE BLVD., SUITE 1200, LOS ANGELES, CALIFORNIA 90025, U.S.A., AMERICAN COMPANY	
DATE OF REGISTRATION	23/09/2014
TITLE	BLENDER VESSEL
PRIORITY	

PRIORITY NUMBER	DATE	COUNTRY
29/491,998	27/05/2014	U.S.A.

DESIGN NUMBER	264900
CLASS	07-02
1)PREETHI KITCHEN APPLIANCES PRIVATE LIMITED, AN INDIAN COMPANY INCORPORATED UNDER THE PROVISIONS OF THE COMPANIES ACT, 1956, OF TECHNOPOLIS KNOWLEDGE PARK, MAHAKALI CAVES ROAD, CHAKALA, ANDHERI-EAST, MUMBAI-400093, INDIA	
DATE OF REGISTRATION	20/08/2014
TITLE	GLASS TOP GAS STOVE
PRIORITY NA	

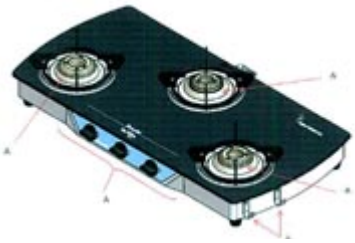

DESIGN NUMBER	264390
CLASS	26-06
1)MINDA INDUSTRIES LTD. (LIGHTING DIVISION), AN INDIAN COMPANY OF 34-35, K.M. G. T. ROAD, VILL. SONIPAT, HARYANA-131029, INDIA	
DATE OF REGISTRATION	31/07/2014
TITLE	LED FLOOR LAMP FOR VEHICLE
PRIORITY NA	

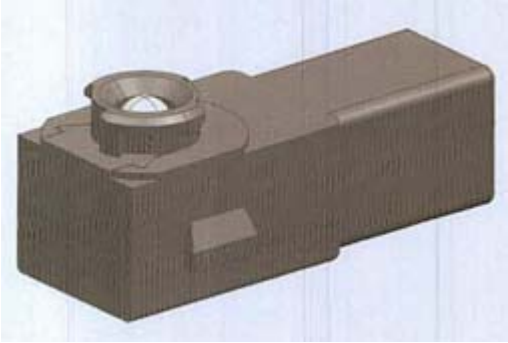

DESIGN NUMBER	266365
CLASS	09-03

1)TRIDENT GROUP LIMITED, A COMPANY INCORPORATED IN
SCO 20-21, SECTOR-9D, MADHYA MARG, CHANDIGARH, INDIA

DATE OF REGISTRATION	30/09/2014
TITLE	PACKAGING

PRIORITY NA

DESIGN NUMBER	253769
CLASS	06-08

1)MAINETTI (UK) LIMITED, A COMPANY INCORPORATED IN SCOTLAND OF
ANNFIELD ESTATE, OXNAM ROAD, JEDBURGH, ROXBURGHSHIRE, SCOTLAND, TD8 6NN, UNITED KINGDOM

DATE OF REGISTRATION	09/05/2013
TITLE	GARMENT HANGER

PRIORITY

PRIORITY NUMBER	DATE	COUNTRY
4027417	12/11/2012	U.K.

DESIGN NUMBER	262663
CLASS	07-07

1)NATURPACK IMPORTACIONES, S.L., A COMPANY EXISTING UNDER THE LAWS OF SPAIN,
C/ LUZ CASANOVA Nº12 46009 VALENCIA, SPAIN

DATE OF REGISTRATION	19/05/2014
TITLE	NET FOR FRUITS

PRIORITY

PRIORITY NUMBER	DATE	COUNTRY
518173	19/11/2013	SPAIN

DESIGN NUMBER	263188
CLASS	07-06
1)MA DESIGN INDIA PRIVATE LIMITED, A COMPANY INCORPORATED IN INDIA HAVING ITS PRINCIPAL PLACE OF BUSINESS AT A-41, SECTOR-80, PHASE-II, NOIDA-201305, U.P. INDIA	
DATE OF REGISTRATION	06/06/2014
TITLE	BOTTLE OPENER
PRIORITY NA	

DESIGN NUMBER	265964
CLASS	13-03
1)M/S V-GUARD INDUSTRIES LTD., AN INDIAN COMPANY INCORPORATED UNDER THE COMPANIES ACT OF 1956 WHOSE ADDRESS IS 33/2905 F, VENNALA HIGH SCHOOL ROAD, VENNALA, KOCHI-682028, KERALA STATE, INDIA	
DATE OF REGISTRATION	24/09/2014
TITLE	POWER SUPPLY UNIT FOR DOMESTIC USE
PRIORITY NA	

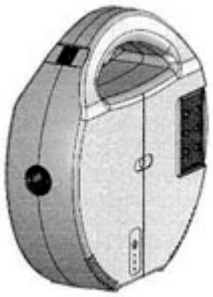

DESIGN NUMBER	264309
CLASS	24-01
1)NIPRO CORPORATION, 9-3, HONJONISHI 3-CHOME, KITA-KU, OSAKA-SHI, OSAKA, JAPAN, A JAPANESE CORPORATION	
DATE OF REGISTRATION	28/07/2014
TITLE	HOLDER FOR BLOOD RESERVOIR

PRIORITY

PRIORITY NUMBER	DATE	COUNTRY
2014-002032	31/01/2014	JAPAN

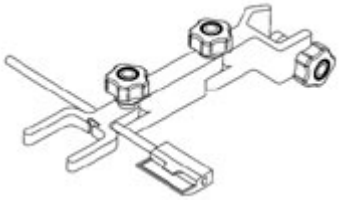

DESIGN NUMBER	262388
CLASS	09-03
1)RESMED LIMITED; AN AUSTRALIAN COMPANY HAVING AN OFFICE AND PLACE OF BUSINESS AT 1 ELIZABETH MACARTHUR DRIVE, BELLA VISTA, NEW SOUTH WALES, 2153, AUSTRALIA	
DATE OF REGISTRATION	06/05/2014
TITLE	PACKAGING FOR PATIENT INTERFACE

PRIORITY

PRIORITY NUMBER	DATE	COUNTRY
29/471,991	07/11/2013	U.S.A.

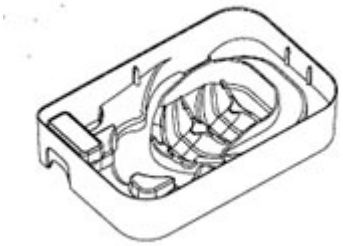

DESIGN NUMBER	261054
CLASS	24-04
1)PATRAVALE; VANDANA BHARAT HAVING ADDRESS DEPARTMENT OF PHARMACEUTICAL SCIENCE AND TECHNOLOGY, INSTITUTE OF CHEMICAL TECHNOLOGY (DEEMED UNIVERSITY), NATHALAL PAREKH MARG, MATUNGA (EAST), MUMBAI-400 019, INDIA AN INDIAN NATIONAL.	
DATE OF REGISTRATION	18/03/2014
TITLE	INHALER
PRIORITY NA	

DESIGN NUMBER	262103
CLASS	14-03
1)PLANTRONICS INC., A DELAWARE CORPORATION HAVING A PLACE OF BUSINESS AT 345 ENCINAL STREET, SANTA CRUZ, CA 95060, UNITED STATES OF AMERICA	
DATE OF REGISTRATION	28/04/2014
TITLE	COMMUNICATIONS HEADSET

PRIORITY

PRIORITY NUMBER	DATE	COUNTRY
29/471,308	30/10/2013	U.S.A.

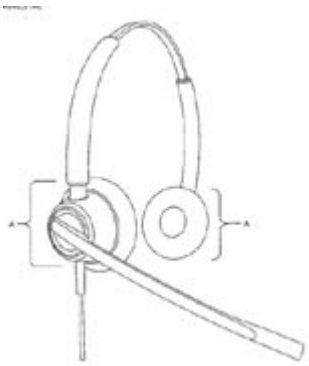

DESIGN NUMBER	267461
CLASS	23-03

1)GUANGDONG GEMAKE ELECTRIC APPLIANCE CO., LTD,
GEMAKE INDUSTRIAL PARK, DONGFU ROAD, DONGFENG TOWN, ZHONGSHAN CITY, GUANGDONG PROVINCE, PR CHINA, A COMPANY OF CHINA.

DATE OF REGISTRATION	17/11/2014
TITLE	ELECTRIC WATER HEATER

PRIORITY NA

DESIGN NUMBER	262789
CLASS	11-01

1)MARIE-ANN WACHTMEISTER, A SWEDISH CITIZEN, OF
TROLLEBERGS GARD, 245 61, STAFFANSTORP, SWEDEN

DATE OF REGISTRATION	22/05/2014
TITLE	JEWELLERY

PRIORITY

PRIORITY NUMBER	DATE	COUNTRY
0023540116-0001	21/11/2013	OHIM

DESIGN NUMBER	266758
CLASS	07-01

1)NAYASA POLYPLAST OF G-9 UDYOG NAGAR O.I.D.C., RINGANVADA NANI DAMAN, DAMAN-396 210, INDIA,
INDIAN PARTNERSHIP FIRM, WHOSE PARTNERS ARE DINESH LAXMINARAYAN MALIK & MANASI SACHDEV, ALL INDIAN NATIONALS

DATE OF REGISTRATION	16/10/2014
TITLE	BOWL

PRIORITY NA

DESIGN NUMBER	266111
CLASS	24-01

1)MR. SACHIN G. LOKAPURE (INDIA). A PROPRIETOR OF SAGLO® RESEARCH EQUIPMENT HAVING ITS PRINCIPAL PLACE OF BUSINESS
5099, NEAR ASHA TALKIES, OPP. OMKAR APARTMENT, SHANIWAR PETH, MIRAJ-416410, DIST-SANGLI, MAHARASHTRA, INDIA.

DATE OF REGISTRATION	29/09/2014
TITLE	BACTERIAL SUSPENSION APPLICATOR FOR SAMPLE HOLDER

PRIORITY NA

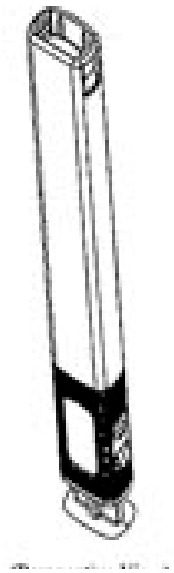

DESIGN NUMBER	264080
CLASS	06-04

1)TEGOMETALL INTERNATIONAL AG, OF
INDUSTRIESTRASSE 7, 8574 LENGWIL, SWITZERLAND

DATE OF REGISTRATION	17/07/2014
TITLE	RACK REAR WALL

PRIORITY

PRIORITY NUMBER	DATE	COUNTRY
001402523	10/02/2014	OHIM

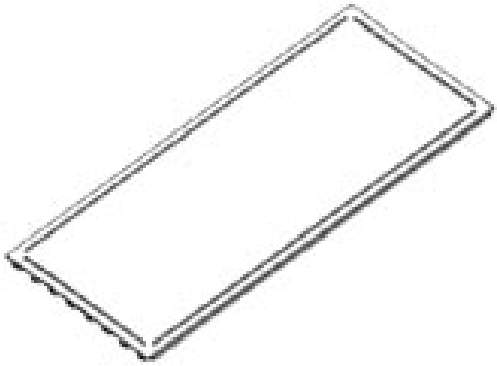

DESIGN NUMBER	264353
CLASS	13-03

1)PHOENIX CONTACT GMBH & CO. KG; A GERMAN COMPANY,
OF BRUNO MUTH; FLACHSMARKTSTR. 8, D-32825 BLOMBERG, GERMANY

DATE OF REGISTRATION	30/07/2014
TITLE	ELECTRICAL CONNECTOR

PRIORITY

PRIORITY NUMBER	DATE	COUNTRY
40 2014 100 100.6	06/02/2014	GERMANY

DESIGN NUMBER	264762	
CLASS	02-03	
1)VEGA AUTO ACCESSORIES PVT LTD., REPRESENTED BY ITS DIRECTOR MR. GIRIDHARI CHANDAK., HAVING OFFICE AT: NO. 543, VITHALDEV LANE, SHAHAPUR, BELGAUM-590003, NATIONALITY: INDIAN		
DATE OF REGISTRATION	13/08/2014	
TITLE	LOCKING SYSTEM FOR HELMET	
PRIORITY NA		

DESIGN NUMBER	268341	
CLASS	25-02	
1)M/S. MIRROR PROFILE INDUSTRIES HAVING PLACE OF BUSINESS AT #136, SAKALAWARA CROSS, BANNERGHATTA ROAD, SY. NO. 38, KALKERE VILLAGE, BANGALORE-560083, AND NATIONALITY OF INDIAN		
DATE OF REGISTRATION	22/12/2014	
TITLE	DOOR SECTION	
PRIORITY NA		

DESIGN NUMBER	262746	
CLASS	12-11	
1)SOLAR WORLD HAVING ITS REGISTERED OFFICE AT PLOT NO.-199, TRANSPORT NAGAR, OPP. SARAB MULTIPLEX, DIST.-JALANDHAR, PUNJAB-144004, INDIA		
DATE OF REGISTRATION	21/05/2014	
TITLE	SOLAR RICKSHAW	
PRIORITY NA		

DESIGN NUMBER	265671
CLASS	24-02
1)DIRECTOR GENERAL, DEFENCE RESEARCH AND DEVELOPMENT ORGANIZATION, A COMPANY REGISTERED UNDER THE COMPANIES ACT 1956 HAVING ITS REGISTERED OFFICE AT MINISTRY OF DEFENCE, GOVERNMENT OF INDIA, ROOM NO. 348, B-WING, DRDO BHAVAN, RAJAJI MARG, NEW DELHI-110011, INDIA; NATIONALITY: INDIAN	
DATE OF REGISTRATION	15/09/2014
TITLE	REMOTE PHYSIOLOGICAL MONITORING DEVICE
PRIORITY NA	

DESIGN NUMBER	265442
CLASS	23-02
1)IRIS INDIA HOUSEHOLD SOLUTIONS PVT. LTD; AN INDIAN COMPANY AT K-9 UDYOG NAGAR INDUSTRIAL AREA, ROHTAK ROAD, DELHI-110041 AND ITS DIRECTOR AJAY GOAL, SMT. SNEHA GOEL, AN INDIAN NATIONAL	
DATE OF REGISTRATION	05/09/2014
TITLE	MIXING TAP
PRIORITY NA	

DESIGN NUMBER	265511
CLASS	05-05
1)JADE ESERVICES PRIVATE LIMITED HAVING ADDRESS AS PLOT NO. 103, UDYOG VIHAR, PHASE-I, GURGAON-122016, HARYANA, INDIA	
DATE OF REGISTRATION	09/09/2014
TITLE	TEXTILE FABRIC
PRIORITY NA	

DESIGN NUMBER	265570
CLASS	31-00
1)MR. HASMUKH M. JAIN INDIAN NATIONAL, TRADING AS M/S. BHAIRAV PLASTIC CARRYING ON BUSINESS ADDRESS AT 1/8, RAMDAS PADHYE BUILDING, S. K. BOLE ROAD, DADAR-WEST, MUMBAI-400028, MAHARASHTRA, INDIA	
DATE OF REGISTRATION	10/09/2014
TITLE	BASE OF MIXER
PRIORITY NA	

DESIGN NUMBER	262540
CLASS	12-16
1)SCANIA CV AB, A SWEDISH COMPANY OF, SE-151 87, SÖDERTÄLJE, SWEDEN	
DATE OF REGISTRATION	13/05/2014
TITLE	STEPPLATE
PRIORITY	

PRIORITY NUMBER	DATE	COUNTRY
2013/0490	11/12/2013	SWEDEN

DESIGN NUMBER	262885
CLASS	08-08
1)RAJILKUMAR MAGANLAL TRAMBADIA (ADULT AND INDIAN NATIONAL) SOLE PROPRIETOR OF SHREE NILKANTHVARI CREATION (INDIAN PROPRIETORSHIP CONCERN) HAVING PLACE OF BUSINESS AT: NAVRANGPARA-8, MAVDI PLOT, RAJKOT-GUJARAT-(INDIA)	
DATE OF REGISTRATION	26/05/2014
TITLE	CURTAIN BRACKET
PRIORITY NA	

DESIGN NUMBER	260153
CLASS	13-03

1)INTELLIGENT ENERGY LIMITED OF
CHARNWOOD BUILDING, HOLYWELL PARK, ASHBY ROAD, LOUGHBOROUGH, LEICESTERSHIRE, LE11 3GB, UNITED KINGDOM

DATE OF REGISTRATION	06/02/2014
TITLE	POWER CELL PLUG ADAPTER

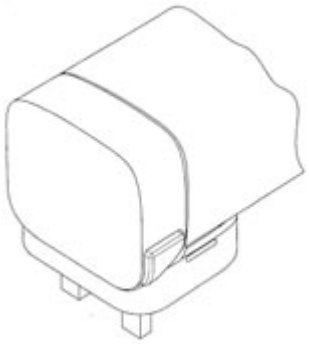

PRIORITY

PRIORITY NUMBER	DATE	COUNTRY
29/462,704	07/08/2013	U.S.A.

DESIGN NUMBER	268391
CLASS	06-01

1)MR. GHISULAL RATHOD, MR. PRADEEP RATHOD, MR. PANKAJ RATHOD, MR. PANNALAL SHARMA, MR. JAYANTILAL JAIN, MRS. SANGEETA RATHOD AND MRS. BABITA RATHOD, ALL INDIAN NATIONALS TRADING UNDER THE NAME AND STYLE OF M/S. CELLO PLASTOTECH, A PARTNERSHIP FIRM REGISTERED UNDER THE PROVISION OF INDIAN PARTNERSHIP ACT, 1932, HAVING OFFICE ADDRESS AT
5, CORPORATE AVENUE, 'B' WING, CELLO HOUSE, SONAWALA ROAD, GOREGAON (EAST), MUMBAI-400 063, MAHARASHTRA, INDIA

DATE OF REGISTRATION	24/12/2014
TITLE	STOOL

PRIORITY NA

DESIGN NUMBER	243735
CLASS	29-02

1)N. V. HOLMATRO
LISSENVELD 30, 4941 VL RAAMSDONKSVEER, THE NETHERLANDS

DATE OF REGISTRATION	07/03/2012
TITLE	SAFETYPEN

PRIORITY

PRIORITY NUMBER	DATE	COUNTRY
001914631	08/09/2011	EUROPEAN UNION

DESIGN NUMBER	263253
CLASS	24-04
1)RESMED LTD, HAVING AN OFFICE AND PLACE OF BUSINESS AT 1 ELIZABETH MACARTHUR DRIVE, BELLA VISTA, NEW SOUTH WALES, 2153, AUSTRALIA	
DATE OF REGISTRATION	11/06/2014
TITLE	HEADGEAR CLIP FOR PATIENT INTERFACE

PRIORITY

PRIORITY NUMBER	DATE	COUNTRY
29/476,296	12/12/2013	U.S.A.

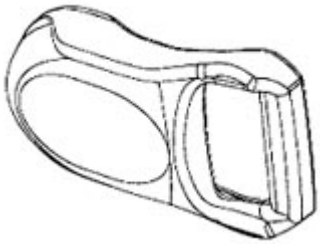

DESIGN NUMBER	264085
CLASS	06-04
1)TEGOMETALL INTERNATIONAL AG, OF INDUSTRIESTR. 7, 8574 LENGWIL, SWITZERLAND	
DATE OF REGISTRATION	17/07/2014
TITLE	RACK REAR WALL

PRIORITY

PRIORITY NUMBER	DATE	COUNTRY
001402523	10/02/2014	OHIM

DESIGN NUMBER	266279
CLASS	12-08
1)"JOFEMAR, S.A.", A SPANISH NATIONAL, HAVING ADDRESS AT " CARRETERA MARCILLA, KM. 2, E-31350, PERALTA (NAVARRA) SPAIN"	
DATE OF REGISTRATION	30/09/2014
TITLE	MOTOR CAR

PRIORITY

PRIORITY NUMBER	DATE	COUNTRY
002436584-0001	31/03/2014	OHIM

DESIGN NUMBER	262662
CLASS	07-07
1)NATURPACK IMPORTACIONES, S.L., A COMPANY EXISTING UNDER THE LAWS OF SPAIN, C/ LUZ CASANOVA Nº12 46009 VALENCIA, SPAIN	
DATE OF REGISTRATION	19/05/2014
TITLE	NET FOR FRUITS

PRIORITY

PRIORITY NUMBER	DATE	COUNTRY
518173	19/11/2013	SPAIN

DESIGN NUMBER	266540
CLASS	12-09
1)CAPTAIN TRACTORS PVT. LTD., A COMPANY INCORPORATED UNDER THE INDIAN COMPANIES ACT, AT VERAVAL (SHAPAR), TAL: KOTDA SANGANI, DIST: RAJKOT, GUJARAT, INDIA	
DATE OF REGISTRATION	09/10/2014
TITLE	TRACTOR
PRIORITY NA	

DESIGN NUMBER	264011
CLASS	12-16
1)EUROPEAN TRAILER SYSTEMS GMBH, A LIMITED LIABILITY CORPORATION ORGANISED AND EXISTING UNDER THE LAWS OF GERMANY WHOSE ADDRESS IS IM MOERSER FELD 1F, 47441 MOERS, GERMANY	
DATE OF REGISTRATION	14/07/2014
TITLE	TARPAULIN ROLLER FOR TRUCKS

PRIORITY

PRIORITY NUMBER	DATE	COUNTRY
DM/083 024	14/01/2014	GERMANY

DESIGN NUMBER	265428
CLASS	12-09
1)KUBOTA CORPORATION, A JAPANESE CORPORATION OF 2-47, SHIKITSUHIGASHI 1-CHOME, NANIWA-KU, OSAKA-SHI, OSAKA 5568601, JAPAN	
DATE OF REGISTRATION	04/09/2014
TITLE	TRACTOR

PRIORITY

PRIORITY NUMBER	DATE	COUNTRY
2014-018875	28/08/2014	JAPAN

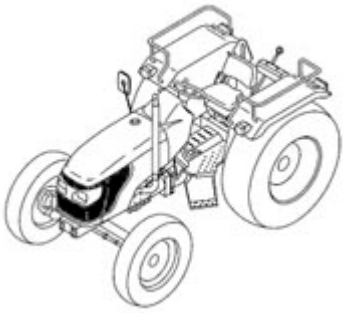

DESIGN NUMBER	261453
CLASS	06-07
1)ATTITUDE MAXIMUS (INDIA) PVT. LTD., A PRIVATE LIMITED COMPANY, G-FLOOR, 3-6-892, STREET NO. 16, HIMAYATHNAGAR, HYDERABAD-500029, ANDHRA PRADESH, INDIA.	
DATE OF REGISTRATION	01/04/2014
TITLE	FRAME
PRIORITY NA	

DESIGN NUMBER	262376
CLASS	06-01
1)A3NP INDÚSTRIA E COMÉRCIO DE MÓVEIS S/A, A BRAZILIAN COMPANY OF RUA IGUATEMI, 192, CONJUNTO 174 B, ITAIM BIBI, SÃO PAULO-SP, ZIP CODE: 01451-010 BRAZIL	
DATE OF REGISTRATION	06/05/2014
TITLE	CHAIR

PRIORITY

PRIORITY NUMBER	DATE	COUNTRY
BR302013005703-08	07/11/2013	BRAZIL

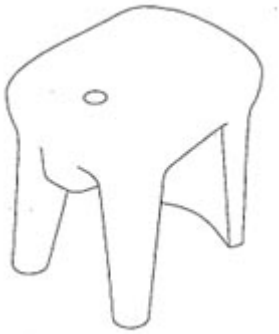

DESIGN NUMBER	264308
CLASS	24-01
1)NIPRO CORPORATION, 9-3, HONJONISHI 3-CHOME, KITA-KU, OSAKA-SHI, OSAKA, JAPAN, A JAPANESE CORPORATION	
DATE OF REGISTRATION	28/07/2014
TITLE	HOLDER FOR BLOOD RESERVOIR

PRIORITY

PRIORITY NUMBER	DATE	COUNTRY
2014-002018	31/01/2014	JAPAN

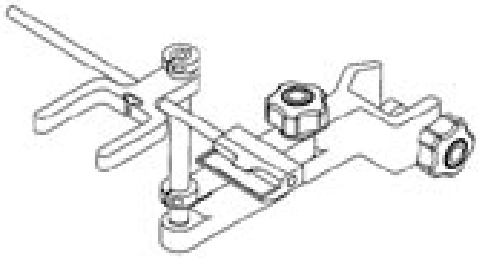

DESIGN NUMBER	265122
CLASS	26-05
1)M/S SHREE SANT KRIPA INTELLECTUAL, HAVING OFFICE AT 7, AKSHAY COMPLEX, OFF. DHOLE PATIL ROAD, PUNE-411001, MAHARASHTRA, INDIA, AN INDIAN	
DATE OF REGISTRATION	26/08/2014
TITLE	CEILING LIGHT FIXTURES

PRIORITY NA

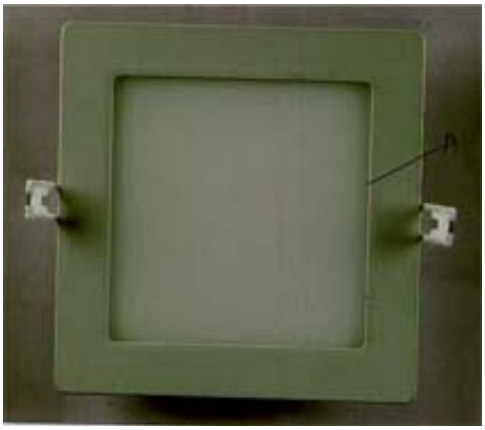

DESIGN NUMBER	260220
CLASS	14-03
1)MEIZU TECHNOLOGY CO., LTD., A COMPANY DULY ORGANIZED AND EXISTING UNDER THE LAWS OF P.R.CHINA OF MEIZU TECHNOLOGY BUILDING, TECHNOLOGY & INNOVATION COAST, ZHUHAI CITY, GUANGDONG PROVINCE, 519085 P.R. CHINA	
DATE OF REGISTRATION	07/02/2014
TITLE	MOBILE PHONE

PRIORITY

PRIORITY NUMBER	DATE	COUNTRY
201330430382.8	06/09/2013	CHINA

DESIGN NUMBER	268404
CLASS	15-05
1)VARUN GOGNA, AN INDIAN NATIONAL, SOLE PROPRIETOR OF QUALITY POWER TOOLS AND HIS PLACE OF BUSINESS AT 13/3, 2ND FLOOR, RAMA ROAD INDUSTRIAL AREA, NEW DELHI-110 015, INDIA	
DATE OF REGISTRATION	24/12/2014
TITLE	BLOWER
PRIORITY NA	

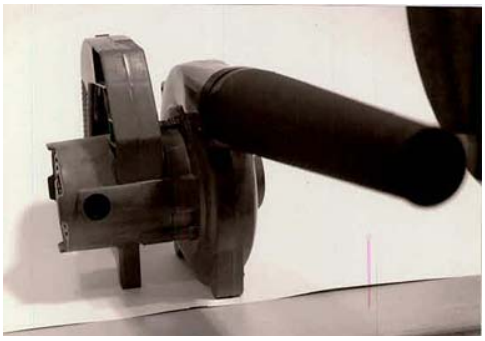

DESIGN NUMBER	263254
CLASS	24-04
1)RESMED LTD, HAVING AN OFFICE AND PLACE OF BUSINESS AT 1 ELIZABETH MACARTHUR DRIVE, BELLA VISTA, NEW SOUTH WALES, 2153, AUSTRALIA	
DATE OF REGISTRATION	11/06/2014
TITLE	CUSHION- CLIP ASSEMBLY FOR PATIENT INTERFACE

PRIORITY

PRIORITY NUMBER	DATE	COUNTRY
29/476,296	12/12/2013	U.S.A.

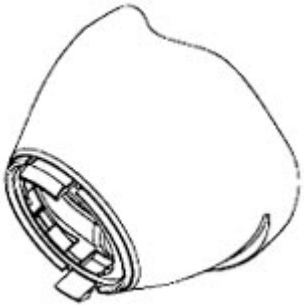

DESIGN NUMBER	267998
CLASS	12-16
1)EUROPEAN TRAILER SYSTEMS GMBH, A LIMITED LIABILITY CORPORATION ORGANISED AND EXISTING UNDER THE LAWS OF GERMANY WHOSE ADDRESS IS IM MOERSER FELD 1F, 47441 MOERS, GERMANY	
DATE OF REGISTRATION	08/12/2014
TITLE	JOINT FOR SLIDING ROOFS FOR TRUCKS

PRIORITY

PRIORITY NUMBER	DATE	COUNTRY
821796101	23/06/2014	GERMANY

DESIGN NUMBER	266757	
CLASS	09-03	
1)NAYASA WORLD OF SURVEY NO. 655/IC NEAR SOMNANATH CO.OP.SOCIETY, DABHEL NANI DAMAN, DAMAN-396310, (UNION TERRITORIES) DAMAN, INDIA, INDIAN PARTNERSHIP FIRM, WHOSE PARTNERS ARE RUPA SACHDEV, MANASI SACHDEV & KISHOR MALIK, ALL INDIAN NATIONALS		
DATE OF REGISTRATION	16/10/2014	
TITLE	CONTAINER	
PRIORITY NA		

DESIGN NUMBER	265443	
CLASS	23-02	
1)IRIS INDIA HOUSEHOLD SOLUTIONS PVT. LTD; AN INDIAN COMPANY AT K-9 UDYOG NAGAR INDUSTRIAL AREA, ROHTAK ROAD, DELHI-110041 AND ITS DIRECTOR AJAY GOAL, SMT. SNEHA GOEL, AN INDIAN NATIONAL		
DATE OF REGISTRATION	05/09/2014	
TITLE	MIXING TAP	
PRIORITY NA		

DESIGN NUMBER	265086	
CLASS	25-01	
1)SIMBEL CERAMIC PVT. LTD. (A COMPANY INCORPORATED UNDER THE COMPANIES ACT, 1956) HAVING ITS PRINCIPAL PLACE OF BUSINESS AT 8-A, NATIONAL HIGHWAY, DHUVA-MATEL ROAD, AT: LAKADDHAR, TAL: WANKANER, DIST. RAJKOT, GUJARAT-INDIA		
DATE OF REGISTRATION	25/08/2014	
TITLE	WALL TILES	
PRIORITY NA		

DESIGN NUMBER	261445
CLASS	06-07

1)ATTITUDE MAXIMUS (INDIA) PVT. LTD., A PRIVATE LIMITED COMPANY, G-FLOOR, 3-6-892, STREET NO. 16, HIMAYATHNAGAR, HYDERABAD-500029, ANDHRA PRADESH, INDIA.

DATE OF REGISTRATION	01/04/2014
TITLE	FRAME

PRIORITY NA

DESIGN NUMBER	262322
CLASS	14-03

1)DANTE R. OLIVAR, 8 DAMA DE NOCHE ST., TOWN & COUNTRY VILLAGE, ANTIPOLO CITY, PHILIPPINES, A CITIZEN OF PHILIPPINES

DATE OF REGISTRATION	05/05/2014
TITLE	BUTTON FOR REMOTE CONTROLS

PRIORITY

PRIORITY NUMBER	DATE	COUNTRY
3-2013-001214	05/11/2013	PHILLIPINES

DESIGN NUMBER	264105
CLASS	09-07

1)APTAR DORTMUND GMBH, OF HILDEBRANDSTRASSE 28, 44319 DORTMUND, GERMANY

DATE OF REGISTRATION	18/07/2014
TITLE	SPRAY CAP FOR AEROSOL CONTAINERS

PRIORITY

PRIORITY NUMBER	DATE	COUNTRY
002396911-0001	03/02/2014	OHIM

DESIGN NUMBER	264300
CLASS	12-16
1)EUROPEAN TRAILER SYSTEMS GMBH, A LIMITED LIABILITY CORPORATION ORGANISED AND EXISTING UNDER THE LAWS OF GERMANY WHOSE ADDRESS IS IM MOERSER FELD 1F, 47441 MOERS, GERMANY	
DATE OF REGISTRATION	28/07/2014
TITLE	TARPAULIN ROLLERS FOR TRUCKS
PRIORITY	

PRIORITY NUMBER	DATE	COUNTRY
DM/083 027	31/01/2014	GERMANY

DESIGN NUMBER	260940
CLASS	07-02
1)MUDITA MULL, OF MULL BUILDINGS, 4, ASHOK MARG, LUCKNOW-226001, INDIA, AN INDIAN CITIZEN	
DATE OF REGISTRATION	12/03/2014
TITLE	BOWL
PRIORITY NA